General Disclaimer

One or more of the Following Statements may affect this Document

- This document has been reproduced from the best copy furnished by the organizational source. It is being released in the interest of making available as much information as possible.

- This document may contain data, which exceeds the sheet parameters. It was furnished in this condition by the organizational source and is the best copy available.

- This document may contain tone-on-tone or color graphs, charts and/or pictures, which have been reproduced in black and white.

- This document is paginated as submitted by the original source.

- Portions of this document are not fully legible due to the historical nature of some of the material. However, it is the best reproduction available from the original submission.

Produced by the NASA Center for Aerospace Information (CASI)

NASA-CR 134948
VOLUME I

SRD-76-011

(NASA-CR-134946-Vol-1) ENERGY CONVERSION ALTERNATIVES STUDY (ECAS), GENERAL ELECTRIC PHASE 1. VOLUME 1: EXECUTIVE SUMMARY Final Report (General Electric Co.) 54 p HC $4.50 CSCL 10B G3/44
N76-23679
Unclas
25355

ENERGY CONVERSION ALTERNATIVES STUDY
-ECAS-
GENERAL ELECTRIC PHASE I FINAL REPORT

VOLUME I, EXECUTIVE SUMMARY

by

J.C. Corman

Corporate Research and Development
General Electric Company

MAY 1976
RECEIVED
NASA STI FACILITY
INPUT BRANCH

Prepared for

NATIONAL AERONAUTICS AND SPACE ADMINISTRATION
ENERGY RESEARCH AND DEVELOPMENT ADMINISTRATION
NATIONAL SCIENCE FOUNDATION

NASA Lewis Research Center
Contract NAS 3-19406

1. Report No. NASA CR-134948 Volume I, Executive Summary	2. Government Accession No.	3. Recipient's Catalog No.
4. Title and Subtitle ENERGY CONVERSION ALTERNATIVES STUDY (ECAS), GENERAL ELECTRIC PHASE I FINAL REPORT; VOLUME I, EXECUTIVE SUMMARY		5. Report Date February 1976
		6. Performing Organization Code
7. Author(s) J.C. Corman		8. Performing Organization Report No. General Electric SRD-76-011
9. Performing Organization Name and Address Corporate Research and Development General Electric Company Schenectady, New York 12301		10. Work Unit No.
		11. Contract or Grant No. NAS 3-19406
12. Sponsoring Agency Name and Address Energy Research and Development Administration National Aeronautics and Space Administration National Science Foundation Washington, DC		13. Type of Report and Period Covered Contractor Report
		14. Sponsoring Agency Code

15. Supplementary Notes

Project Manager, G.J. Barna
NASA Lewis Research Center
Cleveland, Ohio 44135

G.R. Fox, Program Manager
G.E. Corporate Research and Development
Schenectady, New York 12301

16. Abstract

A parametric study was performed to assist in the development of a data base for the comparison of advanced energy conversion systems for utility applications using coal or coal-derived fuels. Estimates of power plant performance (efficiency), capital cost, cost of electricity, natural resource requirements, and environmental intrusion characteristics were made for ten advanced conversion systems. Over 300 parametric points were analyzed to estimate the potential of these systems. Emphasis of the study was on the energy conversion system in the context of a base loaded utility power plant. Although cases employing transported coal-derived fuels were included in the study, the fuel processing step of converting coal to clean fuels was not investigated except for cases where a low-Btu gasifier was integrated with the power plant. All power plant concepts were premised on meeting emission standards requirements. The investigative approach focused on achieving consistency and comparability in the analysis of the various conversion systems. Recognized advocate organizations were employed to analyze their respective cycles and to present their analyses for power plant integration by the GE systems evaluation team. Wherever possible, common subsystems and components for the various systems were treated on a uniform basis. A steam power plant (3500 psig, 1000 F, 1000 F) with a conventional coal-burning furnace-boiler was analyzed as a basis for comparison. Combined cycle gas/steam turbine system results indicated competitive efficiency and a lower cost of electricity compared to the reference steam plant. The Open-Cycle MHD system results indicated the potential for significantly higher efficiency than the reference steam plant but with a higher cost of electricity. The information contained in this report constitutes results from the first phase of a two phase effort. In Phase II, a limited number of concepts will be investigated in more detail through preparation of conceptual designs and an implementation assessment including preparation of R&D plans estimating the resources and time required to bring the systems to commercial fruition.

17. Key Words (Suggested by Author(s)) Coal Energy Conversion Electrical Generation Utility Power Cost of Electricity		18. Distribution Statement Unclassified - unlimited	
19. Security Classif. (of this report) Unclassified	20. Security Classif. (of this page) Unclassified	21. No. of Pages 49	22. Price*

FOREWORD

The work described in this report is a part of the Energy Conversion Alternatives Study (ECAS)—a cooperative effort of the Energy Research and Development Administration, the National Science Foundation, and the National Aeronautics and Space Administration.

This General Electric contractor report for ECAS Phase I is contained in three volumes:

Volume I - Executive Summary

Volume II - Advanced Energy Conversion Systems

- Part 1 - Open-Cycle Gas Turbines
- Part 2 - Closed Turbine Cycles
- Part 3 - Direct Energy Conversion Cycles

Volume III - Energy Conversion and Subsystems and Components

- Part 1 - Bottoming Cycles and Materials of Construction
- Part 2 - Primary Heat Input Systems and Heat Exchangers
- Part 3 - Gasification, Process Fuels, and Balance of Plant

In addition to the principal authors listed, members of the technical staffs of the following subcontractor organizations developed information for the Phase I data base:

General Electric Company
- Advanced Energy Programs/Space Systems Department
- Direct Energy Conversion Programs
- Electric Utility Systems Engineering Department
- Gas Turbine Division
- Large Steam Turbine-Generator Department
- Medium Steam Turbine Department
- Projects Engineering Operation/I&SE Engineering Operation
- Space Sciences Laboratory

Actron, a Division of McDonnell Douglas Corporation

Argonne National Laboratory

Avco Everett Research Laboratory, Incorporated

Bechtel Corporation

Foster Wheeler Energy Corporation

Thermo Electron Corporation

This General Electric contractor report is one of a series of three reports discussing ECAS Phase I results. The other two reports are the following: Energy Conversion Alternatives Study (ECAS), Westinghouse Phase I Final Report (NASA CR-134941), and NASA Report (NASA TMX-71855).

TABLE OF CONTENTS

Page

VOLUME I EXECUTIVE SUMMARY

Summary 1
Introduction 3
Analytical Approach 7
Advanced Energy Conversion Systems 13
Summary of Results 43

VOLUME II ADVANCED ENERGY CONVERSION SYSTEMS

Part 1 Open-Cycle Gas Turbines

Summary 1
Introduction 3
1.0 Analytical Approach 7
2.0 Cycle Analyses, Results, and Discussion 21
2.1 Open-Cycle Gas Turbine 21
2.2 Open-Cycle Gas Turbine Combined Cycle—Air Cooled 44
2.3 Open-Cycle Gas Turbine Combined Cycle—Water Cooled 61
Appendix A Groundrules for Study 75
Appendix B Cost and Performance Evaluation Computer Program 81
Appendix C Operating and Maintenance Cost Estimates 87

Part 2 Closed Turbine Cycles

Summary 1
Introduction 3
2.4 Closed-Cycle Gas Turbine 7
2.5 Supercritical CO_2 Cycle 25
2.6 Advanced Steam Cycle 46
2.7 Liquid Metal Topping Cycle 74

Part 3 Direct Energy Conversion Cycles

Summary 1
Introduction 3
2.8 Open-Cycle MHD 7
2.9 Closed-Cycle Inert Gas MHD 36

TABLE OF CONTENTS (Cont'd)

	Page
2.10 Closed-Cycle Liquid Metal MHD	63
2.11 Fuel Cells—Low Temperature	89
2.12 Fuel Cells—High Temperature	108
3.0 Summary of Results—Conversion Systems	117
Appendix A Power Conditioning Systems	127

VOLUME III ENERGY CONVERSION SUBSYSTEMS AND COMPONENTS

Part 1 Bottoming Cycles and Materials of Construction

Summary	1
Introduction	3
4.0 Bottoming Cycles	7
5.0 Materials of Construction	39

Part 2 Primary Heat Input Systems and Heat Exchangers

Summary	1
Introduction	3
6.0 Primary Heat Input Systems	7
7.0 Heat Exchangers	95
Appendix A Design Data and Equipment Outlines for Primary Heat Input Systems	101
Appendix B Equipment Performance Data for Primary Heat Input Systems	143
Appendix C Cost Data for Primary Heat Input Systems	181

Part 3 Gasification, Process Fuels, and Balance of Plant

Summary	1
Introduction	3
8.0 Gasification and Process Fuels	7
9.0 Balance of Plant	55
10.0 Summary of Results—Energy Conversion Subsystems and Components	121
Appendix A Coal Transportation Cost Estimates	129
Appendix B Balance-of-Plant Estimate Results for Parametric Point Variations	135

LIST OF ILLUSTRATIONS

Executive Summary

Figure		Page
1	Power Plant Integration	10
2	Advanced Energy Conversion Systems "Range" of Results	12
3	Open-Cycle Gas Turbine—Recuperative	14
4	Open-Cycle Gas Turbine (Simple and Recuperative)	14
5	Open-Cycle Gas Turbine—Combined Cycle	16
6	Open-Cycle Gas Turbine Combined Cycle—Air Cooled	18
7	Open-Cycle Gas Turbine Combined Cycle—Water Cooled	18
8	Closed-Cycle Gas Turbine	20
9	Closed-Cycle Gas Turbine	21
10	Supercritical CO_2 Cycle	23
11	Supercritical CO_2	24
12	Advanced Steam Cycle	26
13	Advanced Steam	27
14	Liquid Metal Topping Cycle	28
15	Liquid Metal Topping	30
16	Open-Cycle MHD Cycle	31
17	Open-Cycle MHD	33
18	Closed-Cycle Inert Gas MHD Topping Cycle	34
19	Closed-Cycle Inert Gas MHD	36
20	Closed-Cycle Liquid Metal MHD Cycle	37
21	Closed-Cycle Liquid Metal MHD	39
22	Fuel Cells—Low Temperature	41
23	Fuel Cells—Low Temperature	42
24	Summary Comparison of Cycles (Efficiency)	46
25	Summary Comparison of Cycles (Capital Cost)	47
26	Summary Comparison of Cycles (Cost of Electricity at 65% Capacity Factor)	48

LIST OF TABLES

Table		
1	Characteristics of Process Fuels	8
2	Advanced Energy Conversion Systems	9
3	Steam Power Plant Comparison (3500 psi/1000 F/1000 F)	12

Summary

PHASE I FINAL REPORT

The objective of Phase I of the Energy Conversion Alternatives Study (ECAS) for coal or coal-derived fuels was to assist in the development of a technical-economic information base on the ten energy conversion systems specified for investigation. Over 300 parametric variations were studied in an attempt to identify system and cycle conditions which indicate the best potential of the energy conversion concept. This information base provided a foundation for selection of energy conversion systems for more in-depth investigation in the conceptual design portion of the ECAS study. The systems for continued study were specified by the ECAS Interagency Steering Committee.

The technical-economic results include efficiency, capital cost, and cost of electricity. For reference purposes a steam cycle (3500 psi/1000 F/1000 F [24.1 MN/m^2/811 K/811 K]) with a conventional coal burning furnace, stack gas cleanup, and wet mechanical draft cooling towers was analyzed with the same analysis procedure employed for the advanced systems. The highest overall efficiencies were estimated for the open-cycle MHD system. The potential for overall efficiencies approaching or exceeding 50 percent, and significantly higher than the 37 percent efficient reference steam cycle, was shown. A group of cycles—advanced steam, supercritical CO_2, liquid metal topping, and inert gas MHD—had efficiencies estimated in the 40 to 45 percent range.

The energy conversion systems with capital costs significantly lower than the reference steam plant were those with short construction times and simple construction, i.e., open-cycle gas turbines and low-temperature fuel cells. The more complex plants, i.e., open- and closed-cycle MHD and liquid metal topping, required longer construction time and were higher in capital cost.

Efficiency and capital cost are a part of the total technical-economic evaluation. The combination of these characteristics with the cost of fuel and operation and maintenance costs results in a cost of electricity for more complete comparisons. The only systems which had estimated costs of electricity which were consistently lower than the reference steam plant's 30 mills/kWh at .65 capacity factor were the open-cycle gas turbine-combined cycles. Plants which had high capital costs, e.g., MHD, supercritical CO_2, liquid metal topping, and high-temperature fuel cells had a resulting cost of electricity higher than the reference steam plant. The low capital cost plants—low-temperature fuel cells and open-cycle gas turbine, recuperative—utilized clean fuels and consequently had high fuel charges which resulted in higher costs of electricity than the reference steam plant at .65 capacity factor. These systems would be more economically applicable to peaking or mid-range duty.

Introduction

PHASE I FINAL REPORT

Many advanced energy conversion techniques which can use coal or coal-derived fuels have been advocated for power generation applications. Conversion systems advocated have included open- and closed-cycle gas turbine systems (including combined gas turbine-steam turbine systems), supercritical CO_2 cycle, liquid metal Rankine topping cycles, magnetohydrodynamics (MHD), and fuel cells. Advances have also been proposed for the steam systems which now form the backbone of our electric power industry. These advances include the use of new furnace concepts and higher steam turbine inlet temperatures and pressures. Integration of a power conversion system with a coal processing plant producing a clean low-Btu gas for use in the power plant is still another approach advocated for energy conserving, economical production of electric power. Studies of all these energy conversion techniques have been performed in the past. However, new studies performed on a common basis and in light of new national goals and current conditions are required to permit an assessment of the relative merits of these techniques and potential benefits to the nation.

The purpose of this contract is to assist in the development of an information base necessary for an assessment of various advanced energy conversion systems and for definition of the research and development required to bring these systems to fruition. Estimates of the performance, economics, natural resource requirements and environmental intrusion characteristics of these systems are being made on as comparable and consistent a basis as possible leading to an assessment of the commercial acceptability of the conversion systems and the research and development required to bring the systems to commercial reality. This is being accomplished in the following tasks:

Task I	Parametric Analysis	(Phase I)
Task II	Conceptual Designs	(Phase II)
Task III	Implementation Assessment	(Phase II)

This investigation is being conducted under the Energy Conversion Alternatives Study (ECAS) under the sponsorship of Energy Research and Development Administration (ERDA), National Science Foundation (NSF), and National Aeronautics and Space Administration (NASA). The control of the program is under the direction of an Interagency Steering Committee with participation of the supporting agencies. The NASA Lewis Research Center is responsible for project management of this study.

The information presented in this report describes the results produced in the Task I portion of this study. The emphasis

PRECEDING PAGE BLANK NOT FILMED

in this task was placed upon developing an information base upon which comparisons of Advanced Energy Conversion Techniques using coal or coal-derived fuels can be made. The Task I portion of the study was directed at a parametric variation of the ten advanced energy conversion systems under investigation. The wide-ranging parametric study was performed in order to provide data for selection by the Interagency Steering Committee of the systems and specific configurations most appropriate for Task II and III studies.

The Task II effort will involve a more detailed evaluation of seven advanced energy conversion systems and result in a conceptual design of the major components and power plant layout. The Task III effort will produce the research and development plans which would be necessary to bring each of the seven Task II systems to a state of commercial reality and then to assess their potential for commercial acceptability.

A prime objective of this study was to produce results which had a cycle-to-cycle consistency. In order to accomplish this objective and still ensure that each system was properly advocated, an organization which is or had been a proponent of the prime cycle was selected to advocate the energy conversion system and to analyze the performance and economics of the prime cycle portion of the energy conversion system, i.e., the parts of the system which were novel or unique to the system. The remaining subsystems, e.g., fuel processing, furnaces, bottoming cycles, balance of plant, were analyzed by technology specialist organizations which presently have responsibility for supplying these subsystems for utility applications. The final plant configuration and performance were produced by the General Electric Corporate Research and Development study team and this group performed the critical integration of the final plant concept. This methodology was used to provide a system-to-system consistency while maintaining the influence of a cycle advocate.

The ten energy conversion systems under investigation in this study are defined and analyzed in this volume of the report. These include:

1. Open-cycle Gas Turbine Recuperative

   - with clean and semi-clean fuels produced from coal
   - with and without organic bottoming cycles

2. Open-Cycle Gas Turbine

   - with air and water cooling of the gas turbine hot gas path
   - with clean and semi-clean fuels from coal and integrated low-Btu gasifiers

3. Closed-Cycle Gas Turbine

- with helium working fluid
- with a variety of direct coal and clean fuel furnaces
- with and without organic and steam bottoming cycles

4. Supercritical CO_2 Cycle

- with basic and recompression cycle variations
- with a variety of direct coal and clean coal-derived fuel furnaces

5. Advanced Steam Cycle

- with both throttle and/or reheat temperatures greater than present practice (1000 F [811 K])
- with a variety of direct coal and clean coal-derived fuel furnaces

6. Liquid Metal Topping Cycle

- with potassium and cesium as working fluids
- with a variety of direct coal and clean fuel furnaces

7. Open-Cycle MHD

- with direct coal and semi-clean fuel combustion
- with standard steam and gas turbine bottoming

8. Closed-Cycle Inert Gas MHD

- with parallel and topping configurations
- with both direct coal and semi-clean fuel utilization

9. Closed-Cycle Liquid Metal MHD

- with mixture of liquid sodium and helium as working fluids
- with standard steam bottoming
- with a variety of direct coal and clean fuel furnaces

10. Fuel Cells

- both high and low temperature (less than 300 F [422 K])
- with employment of clean process fuels for low temperature cells and low-Btu gasification at high temperature cells

The Executive Summary provides a summary of the Task I (Phase I) effort under the contract, including:

- Specified inputs for the parametric analysis
- Groundrules to assure a uniform basis for analysis
- Description of the methodology and analytical approach in Task I
- Summary description of each of the advanced cycle systems
- Summary comparison of the performance and economics for all of the advanced cycle systems in Task I

ANALYTICAL APPROACH

GROUNDRULES FOR STUDY

All the Advanced Energy Conversion Systems were analyzed in order to determine their potential for producing electrical power while operating on a utility grid. The emphasis of the study was placed on operation at baseloaded conditions. The design goals for the system were for a thirty-year lifetime with a 90 percent plant availability goal. Although these two factors were established as goals, in reality they had very little influence on the Task I designs for those systems not yet exposed to prototype development. The electrical output ranged from 24 MW for the low-temperature fuel cells and open-cycle gas turbines to 2400 MW for the open-cycle MHD and liquid metal topping cycles.

The energy source was coal or coal-derived fuels. The coal was employed 1) in direct combustion with sulfur cleanup in a fluidized bed or 2) with conventional furnaces with stack gas cleanup. The clean fuels were produced as 1) low-Btu gas produced in a cycle-integrated gasifier or 2) transportable process fuels produced from coal and delivered to the plant boundary for a fixed price.

All efficiency values presented in the study are based on the higher heating value (HHV) of the fuel. The primary heat rejection mode was wet cooling towers, and the ambient conditions were 59 F (244 K) and 60 percent relative humidity.

Two efficiency values are discussed in this summary. The power plant efficiency represents the net electrical energy generated by the plant divided by the heat input (based on HHV) of the power plant fuel. The second value is the overall efficiency (coal pile to bus bar) and is the power plant efficiency times the process fuel conversion efficiency. For plants utilizing coal directly these two efficiences are equal.

The capital costs were estimated in mid-1974 dollars. A fixed charge rate of 18 percent was employed. Capital cost adders were applied only during plant construction, and these consisted of a 6 1/2 percent escalation factor and a 10 percent interest charge applied on an "S" curve basis to cash flow.

All the power plants were designed to meet the present EPA emission standards.*

The power plant site was taken to be Middletown, U.S.A.

FUELS

The coals employed in this study were Illinois #6 (HHV 10788 Btu/lb [2.51 x 10^7 J/kg]), Montana sub-bituminous (HHV 8944 Btu/lb

*Emission standards specified.

[2.08 x 10^7 J/kg]) and North Dakota Lignite (HHV 6890 Btu/lb [1.61 x 10^7 J/kg]). Although all coals had a different mine site price, the delivery distances for the three coals were different, so that the combination of transportation charge and mine mouth price resulted in an equal power plant delivery price of $0.85/ million Btu [$0.81/10^9 J]) for all three fuels.**

All process fuels were assumed to be derived from coal. The characteristics of these fuels are given in Table 1. The clean fuels were in part selected to represent the variety of fossil fuels presently available. The semi-clean liquid fuel, Solvent Refined Coal (SRC), represents a residual oil; char oil energy development (COED), a distillate oil; and high-Btu gas (HBtu), a pipeline quality gas. The conversion efficiency is the ratio of the HHV of the process fuel to the HHV of the coal feedstock.

Table 1

CHARACTERISTICS OF PROCESS FUELS

	Semi-Clean Fuel (SRC)	Intermediate-Btu Gas	Low-Btu Gas (Free-Standing)	Hydrogen	COED	High-Btu Gas
Higher Heating Value (Btu/lb)	15,682	6350	2535	54,047	17,041	22,674
Cost Delivered* ($/Million Btu)	1.80	2.00	2.08	2.50	2.60	2.60
Conversion Efficiency (Percent)	78	70	68	61	56	50

*Fuel costs specified.

ADVANCED ENERGY CONVERSION SYSTEMS

The ten energy conversion systems investigated in the Task I Study are shown in Table 2.

One objective of this task was to evaluate a wide range of parametric variations of these primary cycles. The approach to accomplishing this objective was to select one or more nominal design configurations for each advanced cycle, defined as a base case. The parametric point cases were then generated as perturbations of variables around the base case. The variables were fuel type, heat input system type, cycle configuration, state point conditions, and heat rejection system.

The output parameters which were generated for each base case and each parametric point were efficiency, capital cost (of major components, common subsystems, and balance of plant), and cost of electricity. For each base case, additional information was developed on the physical details of the major components, the major material requirements, the natural resource requirements, and the environmental intrusion.

**Coal prices specified.

REPRODUCIBILITY OF THE ORIGINAL PAGE IS POOR

Table 2

ADVANCED ENERGY CONVERSION SYSTEMS

- OPEN-CYCLE GAS TURBINES

  Simple and recuperative cycles
  Combined cycles

- CLOSED CYCLES

  Gas turbine-helium
  Supercritical CO_2
  Advanced steam
  Liquid metal topping

- DIRECT ENERGY CONVERSION

  Magnetohydrodynamic (MHD)
    Open cycle
    Closed-cycle inert gas
    Closed-cycle liquid metal
  Fuel cells

METHODOLOGY OF ANALYSIS

The intent of this study was to develop a consistent information base upon which a relative assessment of the ten energy conversion systems could be made. In order to ensure that each system was represented by a vested interest group, a subcontracting organization was selected to be an advocate of the prime cycle (unique) portion of the advanced energy conversion system. This cycle proponent assisted in the selection of the base case and parametric point variation which were studied. The advocate had responsibility for thermodynamic analysis of the prime cycle and for originating the capital cost estimates of the unique cycle components. In order to ensure a cycle-to-cycle consistency, component technology specialists evaluated and critiqued the advocates' design assumptions and performance and cost estimates.

A major portion of each advanced energy conversion system was composed not of unique components but of subsystems presently used by the utility industry. These common elements were analyzed by an organization which currently supplies equipment or services of this kind to the utility industry. Each organization had responsibility for this common subsystem as applied to each advanced energy conversion system.

This uniformity of analysis extended to the following:

1. Primary Heat Input System, which was employed to supply thermal energy into each closed cycle.

2. Low-Btu Gasifier, which was integrated with the prime cycle and/or the heat input system. This was a fixed bed gasifier with low-temperature cleanup. This same gasifier was also employed to estimate process fuel cost and conversion efficiency in order to maintain a consistent comparison base for those systems employing either integrated low-Btu gasifiers or clean process fuels. This information was utilized by NASA in arriving at the fuel costs shown in Table 1.

3. Bottoming Cycles, which were coupled to the prime cycles, were either steam cycles with standard steam conditions or organic cycles for low-temperature operation.

4. Balance of Plant, which included cost estimates for installation of the heat input system and major components in addition to specifying and installing the coal delivery and heat rejection systems.

The characteristics and performance of the prime cycle and the common subsystems were integrated, as shown in Figure 1, to produce the overall power plant performance and capital cost. This integration was performed by a study team composed of individuals assigned specifically to the different classes of Advanced Energy Conversion Systems.

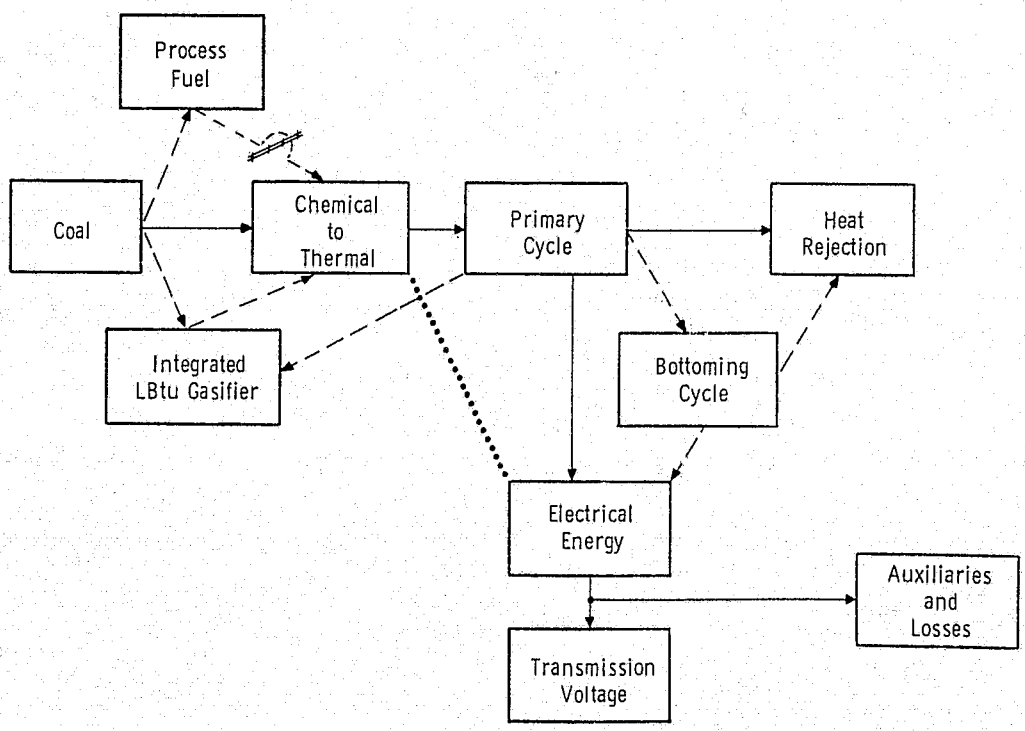

Figure 1. Power Plant Integration

In each system the supply of thermal energy to the prime cycle is critical to its operation. Coal was utilized directly, to produce a process fuel, or in an integrated low-Btu gasifier.

For the direct combustion of coal, the atmospheric fluidized bed was employed as a primary furnace type. This system employs combustion of coal at 1550 F (1117 K) in the presence of limestone. The limestone acts as a sulfur capture medium. A pressurized fluidized bed at 1650 F (1172 K) was also evaluated for all closed-cycle systems. This system featured fluidized bed operation at pressure. A gas turbine is employed to pressurize the furnace. The exhaust gas from the furnace is cleaned and then expanded to deliver the power for air compression and to generate additional electrical output. A conventional coal-burning, radiant furnace with stack gas cleanup was also evaluated for specific systems. In open-cycle MHD, coal was employed directly in the cycle combustor.

The process fuels were employed for all Advanced Energy Conversion Systems. A gas turbine pressurized furnace was employed to utilize the clean gases, either high- or low-Btu, and to supply energy to the prime cycle. The semi-clean fuels (SRC) were utilized in conventional furnaces and as fuel for MHD combustors. The open-cycle gas turbines operated on the process liquid fuels and the clean gases. The open-cycle gas turbine-combined cycle was also evaluated with an integrated low-Btu gasifier. The fuel cells employed only clean process fuels.

SYSTEM COMPARISON

In order to establish a basis for comparison of the Advanced Energy Conversion Systems, a steam power plant with standard steam conditions was evaluated. The steam power plant with various subsystems, as noted in Table 3, was evaluated with the analytical techniques employed in the Task I Study. This system had an overall power plant efficiency of approximately 37 percent and a capital cost of between $600 and $700/kW. The resulting cost of electricity was approximately 30 mills/kWh. A conventional "as built" steam plant operating with these same steam conditions had an average operating efficiency of 37.7 percent during 1971, per FPC reported operating data.

In order to put the results for the ten Advanced Energy Conversion Systems in proper perspective, the "range" of system results is shown in Figure 2. A dashed line axis is drawn through the "as analyzed" standard steam plant performance point. Using this point as an origin, the most attractive advanced systems would be in the second quadrant. It can be seen from the figure that there is an acute absence of cycles in this most preferred region. The next most attractive regions would be the third quadrant, representing lower cost of electricity than the standard steam plant, or the first quadrant, representing higher overall efficiency. The open-cycle gas turbine—combined cycle was the only system which had consistently lower cost of electricity, and open-cycle MHD was the only system which had consistently higher efficiency. The systems in the fourth quadrant were not better than the standard steam plant with respect to cost of electricity or overall efficiency.

Table 3

STEAM POWER PLANT COMPARISON
(3500 psi/1000 F/1000 F)

Systems	Overall Efficiency (percent)	Capital Cost ($/kW)	Cost of Electricity (mills/kWh)
As Analyzed			
• Atmospheric fluidized bed Mechanical, wet cooling tower	36.5	610	29.8
• Conventional furnace Stack gas cleanup Mechanical, wet cooling tower	37.1	690	31.9
• Conventional furnace Limited stack gas cleanup Once through cooling	37.6	570	28.0
As Built			
• Bull Run (T.V.A.) Conventional furnace Limited stack gas cleanup Once through cooling	37.7	-	-

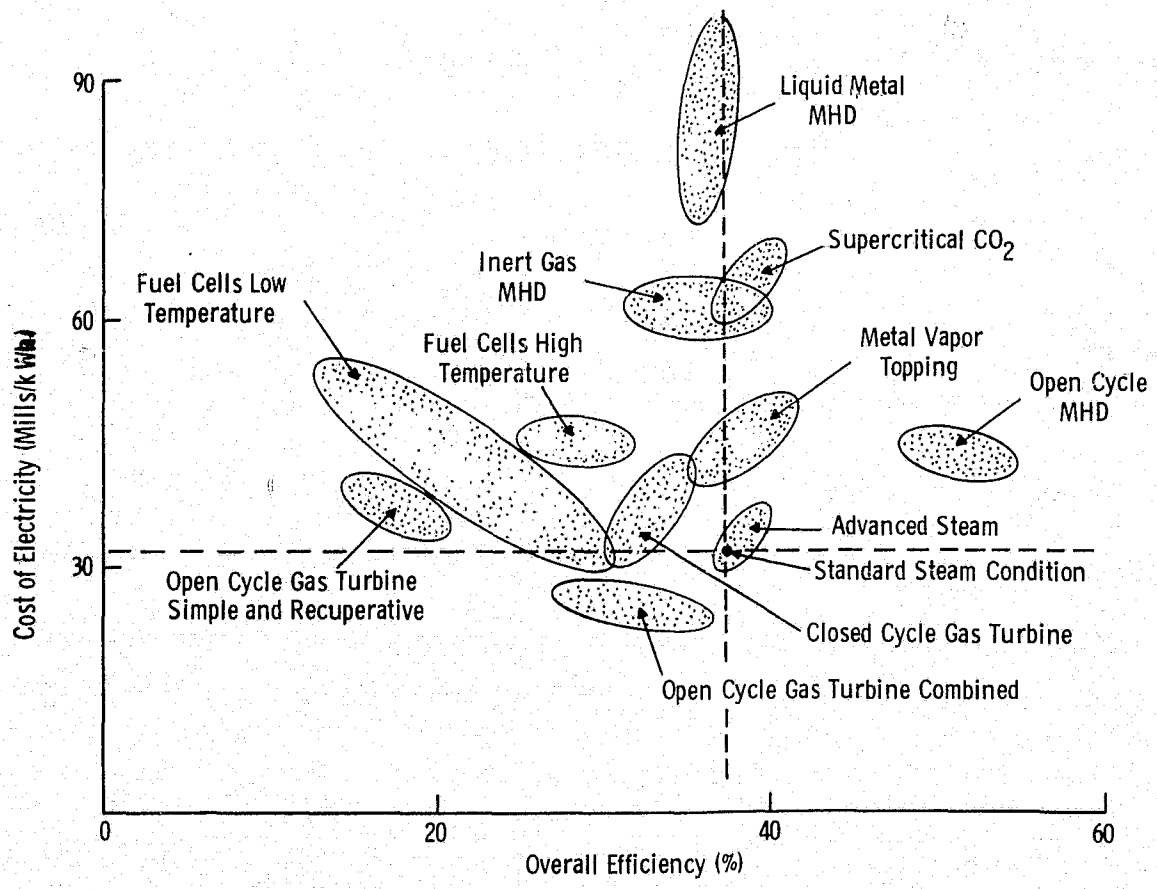

Figure 2. Advanced Energy Conversion Systems "Range" of Results

REPRODUCIBILITY OF THE ORIGINAL PAGE IS POOR

ADVANCED ENERGY CONVERSION SYSTEMS

The ten Advanced Energy Conversion Systems are described in this section. A summary of the cycle results is presented and discussed.

OPEN-CYCLE GAS TURBINE—RECUPERATIVE

System Description

A schematic of the open-cycle gas turbine—recuperative system is shown in Figure 3. The basic cycle employed an air-cooled open-cycle gas turbine. The expanded exhaust gas exiting from the turbine was utilized in a recuperative heat exchanger to preheat the combustion air exiting from the compressor. A clean or semi-clean process fuel was employed, permitting compliance with the SO_X emission standard. Water injection was used as a technique to control thermal NO_X generation.

The base case conditions featured a 2200 F (1478 K) firing temperature and a 12 to 1 pressure ratio. The plant output was 84 MW. The parametric variations considered changes in the pressure ratio and firing temperature, clean fuel type, and power output. The performance characteristics of the recuperative heat exchanger were also varied. In addition to the base case cycle shown in Figure 3, a system configuration in which the exhaust gas from the recuperator boils an organic working fluid was evaluated. This working fluid vapor was then utilized in an organic bottoming cycle. This system modification required the addition of a heat rejection system (cooling towers).

System Results and Discussion

Both simple and recuperative cycle open-cycle gas turbines were evaluated. The employment of process fuels resulted in a significantly lower overall efficiency than was calculated for the power plant efficiency because of the process fuel conversion efficiency.

A summary of results is presented in Figure 4. The base case overall efficiency of 17 percent was reduced from a power plant efficiency of 34 percent by the conversion efficiency to produce high-Btu gas from coal. The highest overall efficiency was achieved with the use of a semi-clean liquid process fuel (SRC) and results from the higher process efficiency for this fuel. The lowest capital cost plant was the simple cycle gas turbine. The lowest cost of electricity was again obtained with the semi-clean fuel.

The employment of organic bottoming cycles resulted in an increase in power plant efficiency to approximately 42 percent (an 8 point increase over the recuperative cycle). However, the capital cost for this addition almost doubled the plant cost and resulted in a slightly higher cost of electricity.

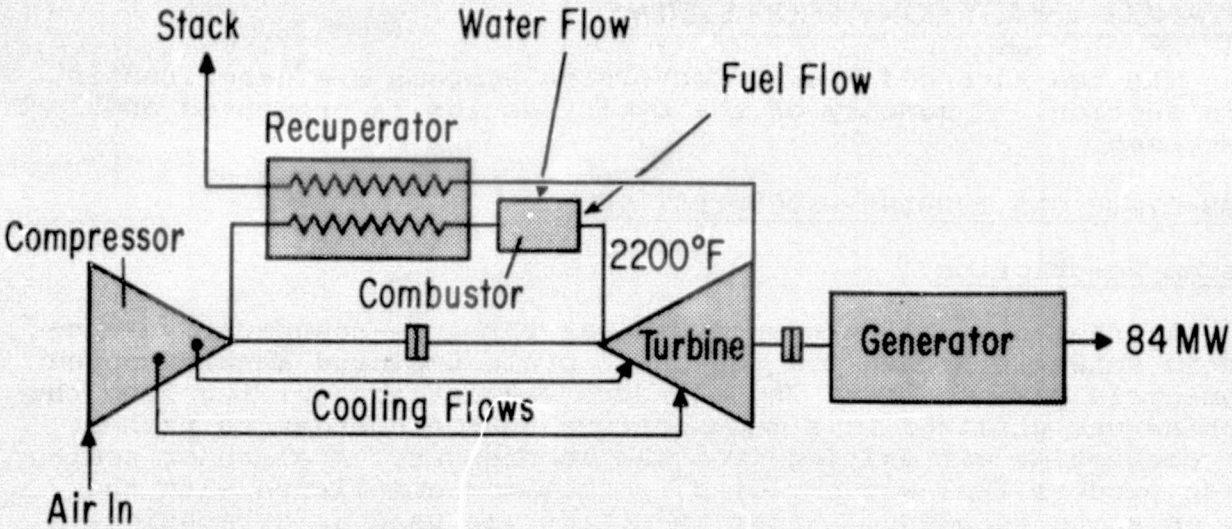

Figure 3. Open-Cycle Gas Turbine—Recuperative

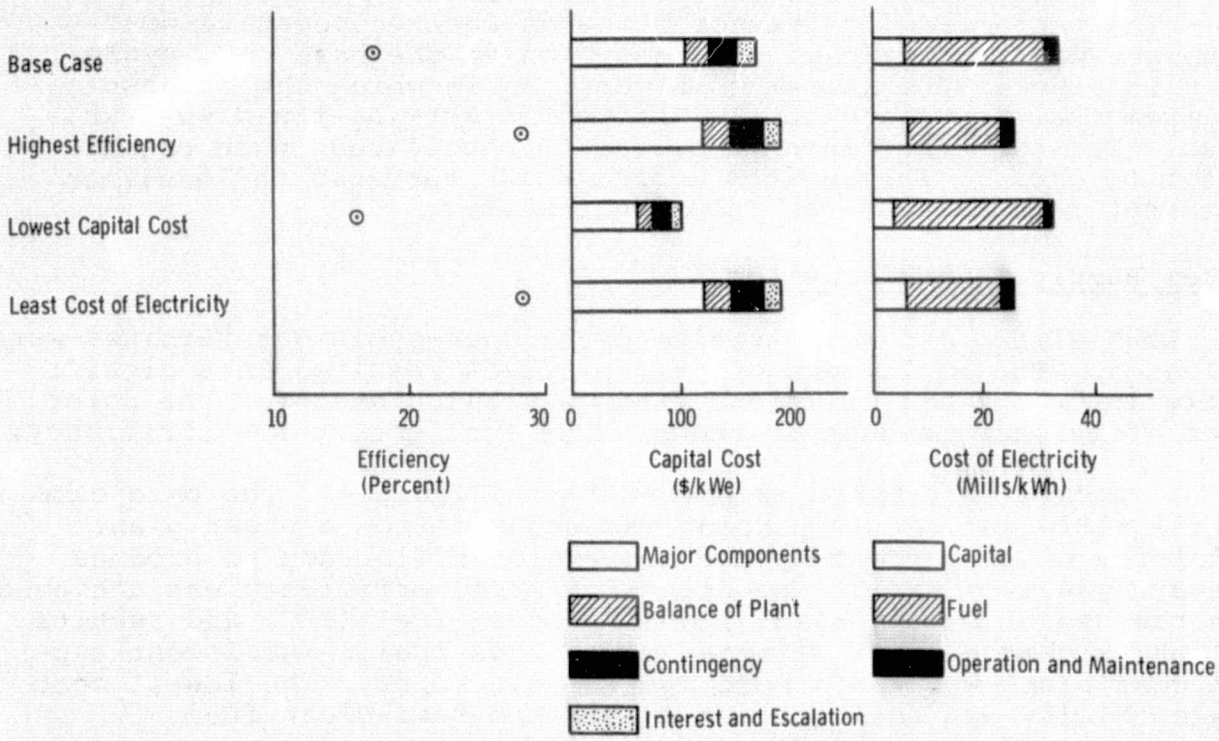

Figure 4. Open-Cycle Gas Turbine (Simple and Recuperative)

REPRODUCIBILITY OF THE ORIGINAL PAGE IS POOR

The features of this plant are low capital costs: simple cycle approximately $100 to $140/kW and recuperative cycle approximately $148 to $216/kW. The plants have short construction times resulting in low interest and escalation charges during construction. The total water consumption of the plant is very low, the only consumptive use being for water injection NO_x control and for cooling tower makeup water when an organic bottoming cycle is applied.

OPEN-CYCLE GAS TURBINE—COMBINED CYCLE

System Description

The schematic for the open-cycle gas turbine—combined cycle is shown in Figure 5. Two different cycle configurations were evaluated in this general advanced energy conversion system class, the distinction being in the method of cooling for the gas turbine. The schematic in the figure shows an air-cooled gas turbine. The second major configuration employed a water-cooled gas turbine.

The open-cycle gas turbine—combined cycle configuration features multiple gas turbines each with its own integrated combustor. The exhaust from the gas turbine (still at temperatures in excess of 1000 F [811 K]) was utilized to generate steam in a heat recovery steam generator. This steam was expanded in a steam bottoming turbine. When an integrated low-Btu gasifier is employed, as in the base case, the compressed air from the gas turbine compressor is supplied to the gasifier. The low-Btu gas is produced in the gasifier by the reaction of coal, air, and steam, the steam being supplied from the heat recovery steam generator and the steam bottoming cycle. The low-Btu gas is cleaned up in a low-temperature process before delivery to the gas turbine combustor.

The base case configuration for the air-cooled gas turbine had a firing temperature of 2200 F (1478 K) and a pressure ratio of 12 to 1. Four gas turbines were employed at 112 MW per gas turbine and an additional 150 MW were generated in the steam turbine. The steam bottoming cycle was operated with throttle steam conditions of 1250 psi (8.6 MN/m^2) and 950 F (783 K). The parametric points consisted of variations in the gas turbine firing temperature (to a maximum of 2600 F [1700 K]) and pressure ratio. The performance characteristics of the heat recovery steam generator were varied. The throttle steam conditions were changed, and the effect of going to a single reheat was studied.

The base case for both cycle configurations, air and water cooling, employed an integrated low-Btu gasifier for production of the clean gas turbine fuel. However all of the process fuels were also analyzed as point variations.

The water-cooled gas turbine configuration employed closed-cycle water cooling of the hot gas path (both stationary and rotational). The energy extracted in this cooling method was integrated into the steam bottoming cycle. The base case for this

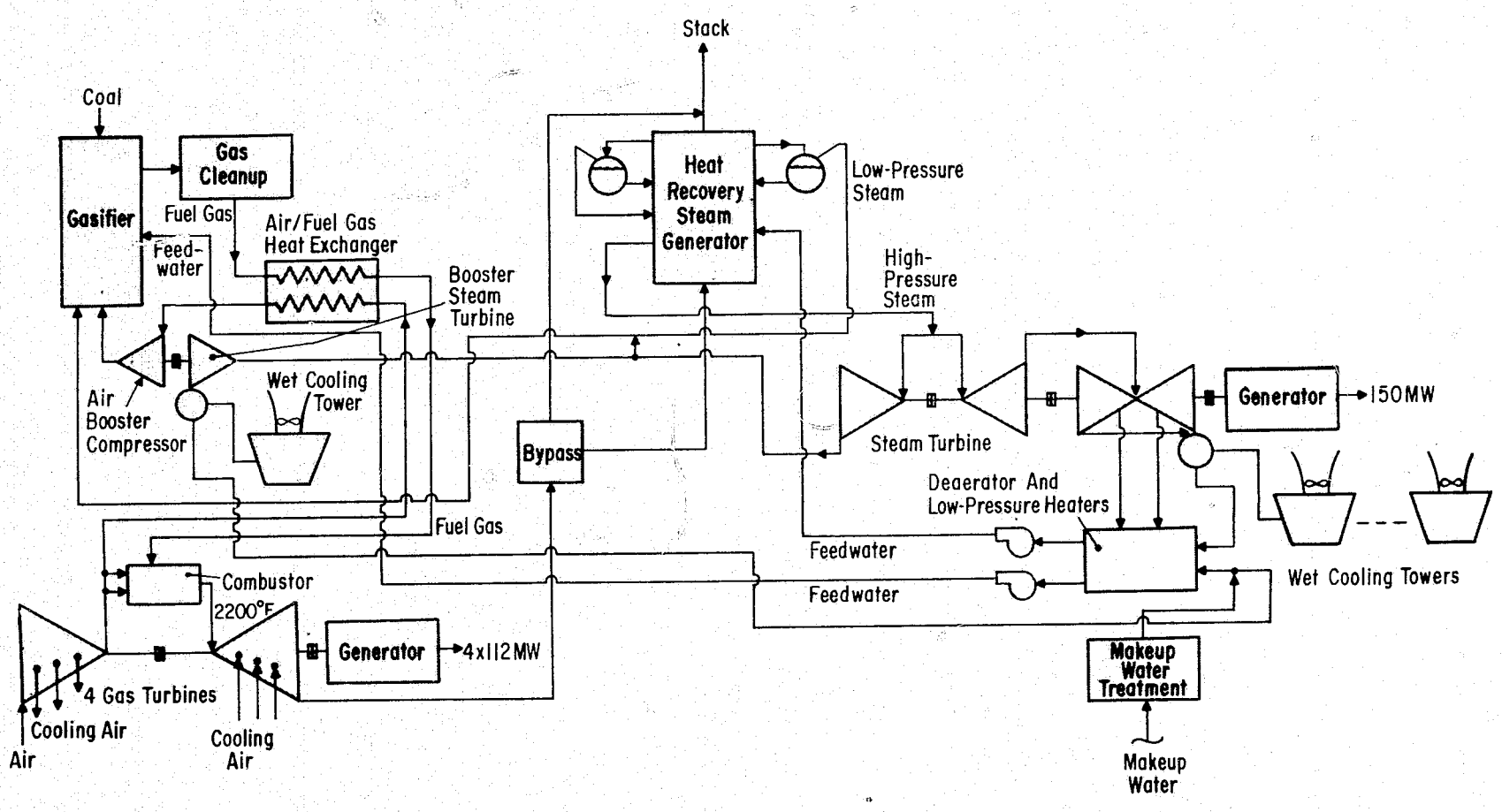

Figure 5. Open-Cycle Gas Turbine—Combined Cycle

configuration had a firing temperature of 2800 F (1811 K) and a pressure ratio of 16 to 1. The items of parametric variation are similar to the air-cooled configuration; however, the maximum water-cooled firing temperature was 3000 F (1922 K). Ceramic hot gas path parts were also evaluated for the transition piece and first-stage nozzle as a variation.

System Results and Discussion

A summary of the results for the air-cooled configuration is shown in Figure 6 and for the water-cooled configuration in Figure 7. The results for these two configurations are similar, the highest efficiency, approximately 37 percent, being obtained for cases with high gas turbine firing temperature and low-Btu fuel. The lowest capital cost plants were achieved with employment of high-Btu gas delivered to the plant boundary. The lowest cost of electricity for the air-cooled configuration was with an integrated low-Btu gasifier fuel supply; with the water-cooled configuration, it occurred with the semi-clean process fuel. Both values were approximately 23 mills/kWh.

Both configurations for the open-cycle gas turbine—combined cycle demonstrated low capital costs compared to the reference steam plant 1) when integrated with a low-Btu gasifier (∿ $420/kW) giving the gas turbine the ability to utilize coal delivered to the plant site and 2) when utilizing a process fuel (∿ $230/kW). The system integrates well with a low-Btu gasifier because of the availability of both compressed air and steam for export from the conversion system to the fuel processing system.

For the air-cooled configuration, the best efficiency occurred at a pressure ratio of 12 to 1. This configuration requires a clean fuel. There is some question that a semi-clean liquid fuel can be used at the high firing temperatures because of the requirement for transpiration cooling and the possibility that particulates in the combustion gas stream will plug the air bleed holes.

For the water-cooled configuration, the best efficiency occurred at a pressure ratio of 16 to 1. As a result of the higher gas turbine exhaust temperatures in this configuration, improved steam conditions can be attained. Combining the better steam conditions with a 3000 F (1922 K) firing temperature and ceramic parts in the transition piece and first-stage nozzle would result in efficiencies in the low forty percent range. The low metal temperatures, achieved with the good cooling medium, and the lack of air bleed holes make this configuration potentially well suited for the semi-clean liquid process fuels. With these process fuels, the power plant efficiency is over 45 percent. The higher specific power output of the water-cooled gas turbines means that fewer gas turbine installations are needed to attain the same power output as the air-cooled units. Thus there is a potential for reduced balance-of-plant costs.

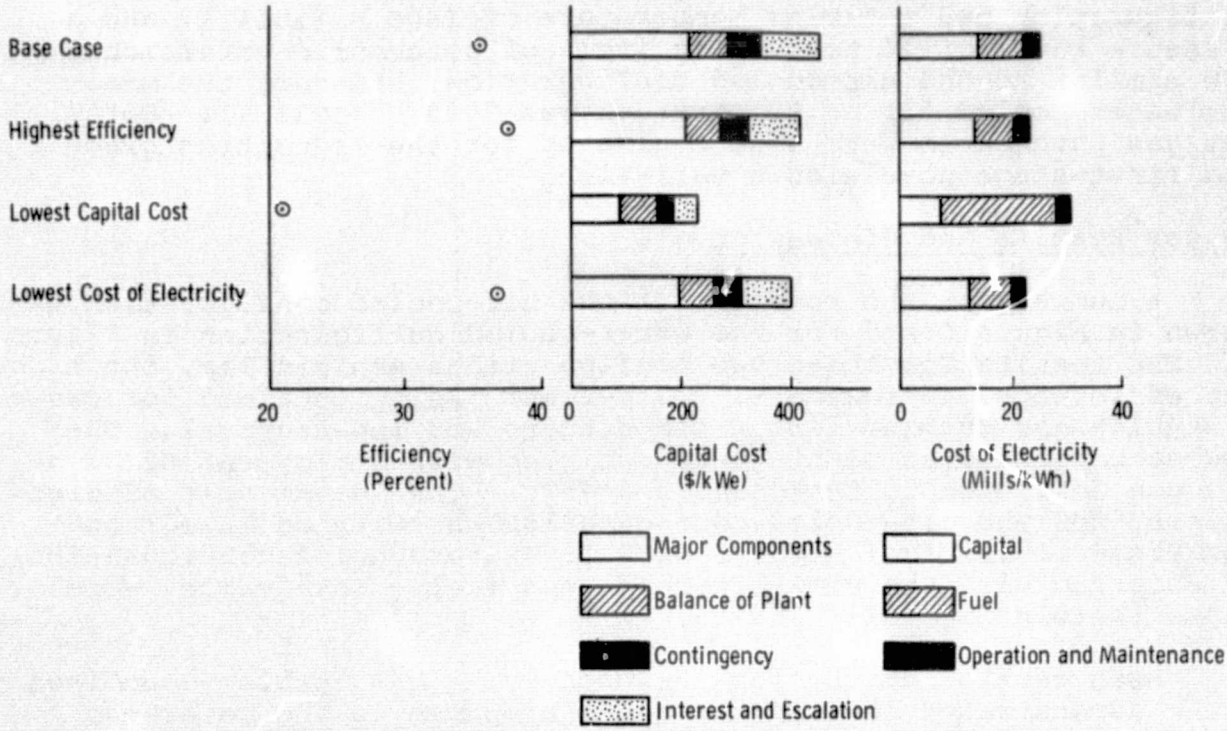

Figure 6. Open-Cycle Gas Turbine Combined Cycle—Air Cooled

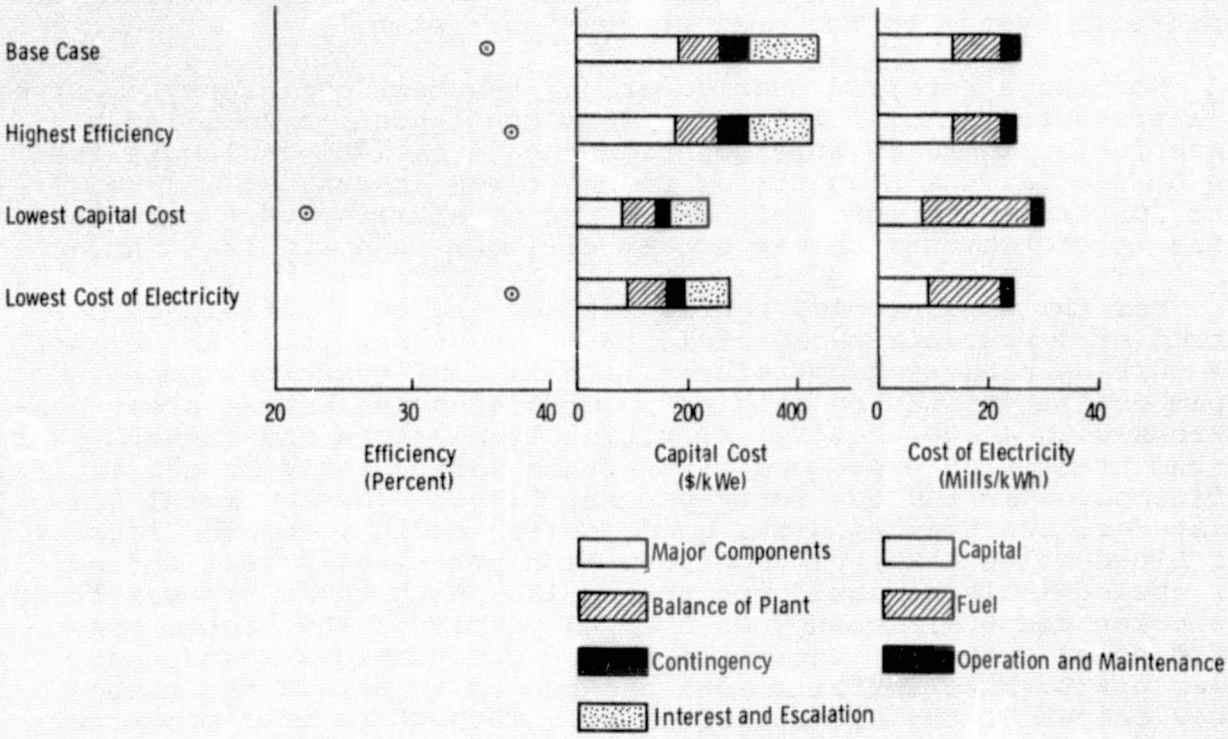

Figure 7. Open-Cycle Gas Turbine Combined Cycle—Water Cooled

Both of these configurations resulted in low cost of electricity, less than 25 mills/kWh. This was the lowest value in the study.

CLOSED-CYCLE GAS TURBINE

System Description

The schematic for the closed gas turbine cycle is shown in Figure 8. This system employs a closed-cycle working fluid and thermal transport into the cycle from a heat exchanger. The working fluid for this system is helium, and the cycle operates as a Brayton cycle.

The energy supply to the cycle in the base case is through the direct combustion of coal in an atmospheric fluidized bed. The helium, after being heated to 1500 F (1089 K), is introduced into the helium expansion turbine. Cooling for this turbine is provided by compressor extraction flow. The helium that exits from the turbine enters a recuperative heat exchanger where energy is exchanged, with the high-pressure flow exiting the compressor en route to the furnace for heat addition. Heat is rejected from the cycle in a precooler. A water loop brings coolant from the cooling towers. The maximum helium pressure is approximately 1000 psi (6.9 MN/m^2).

The parametric point cases include variations in turbine inlet temperature (to a maximum of 1700 F [1200 K]) and compressor pressure ratio. The performance characteristics of the recuperator were varied along with the loop pressure drop. As a cycle variation, a boiler was placed in the low-pressure helium flow exiting the recuperator. Both organic and steam bottoming cycles were coupled to this heat recovery boiler. Parametric point variations were also considered in the bottoming cycles.

The heat input system was also varied. The direct combustion of coal in a pressurized fluidized bed was one variation. A pressurized furnace utilizing either low-Btu gas from an integrated gasifier or high-Btu delivered gas constituted the other options.

System Results and Discussion

A summary of the results for this advanced energy conversion system is shown in Figure 9. The overall efficiency for this system is in the low to mid thirties, the maximum efficiency of ~38 percent occurring with a cycle configuration employing an organic bottoming cycle. The lowest capital cost was with a pressurized furnace heat input system employing a high-Btu gas, but this also resulted in a low overall efficiency. The lowest costs of electricity were obtained with 1) a configuration similar to the base case but with a pressure ratio of 4 to 1 and an intercooled compressor or 2) with a steam bottomed case with no recuperative heat exchanger. Both cases resulted in costs of electricity in the low thirty mills/kWh.

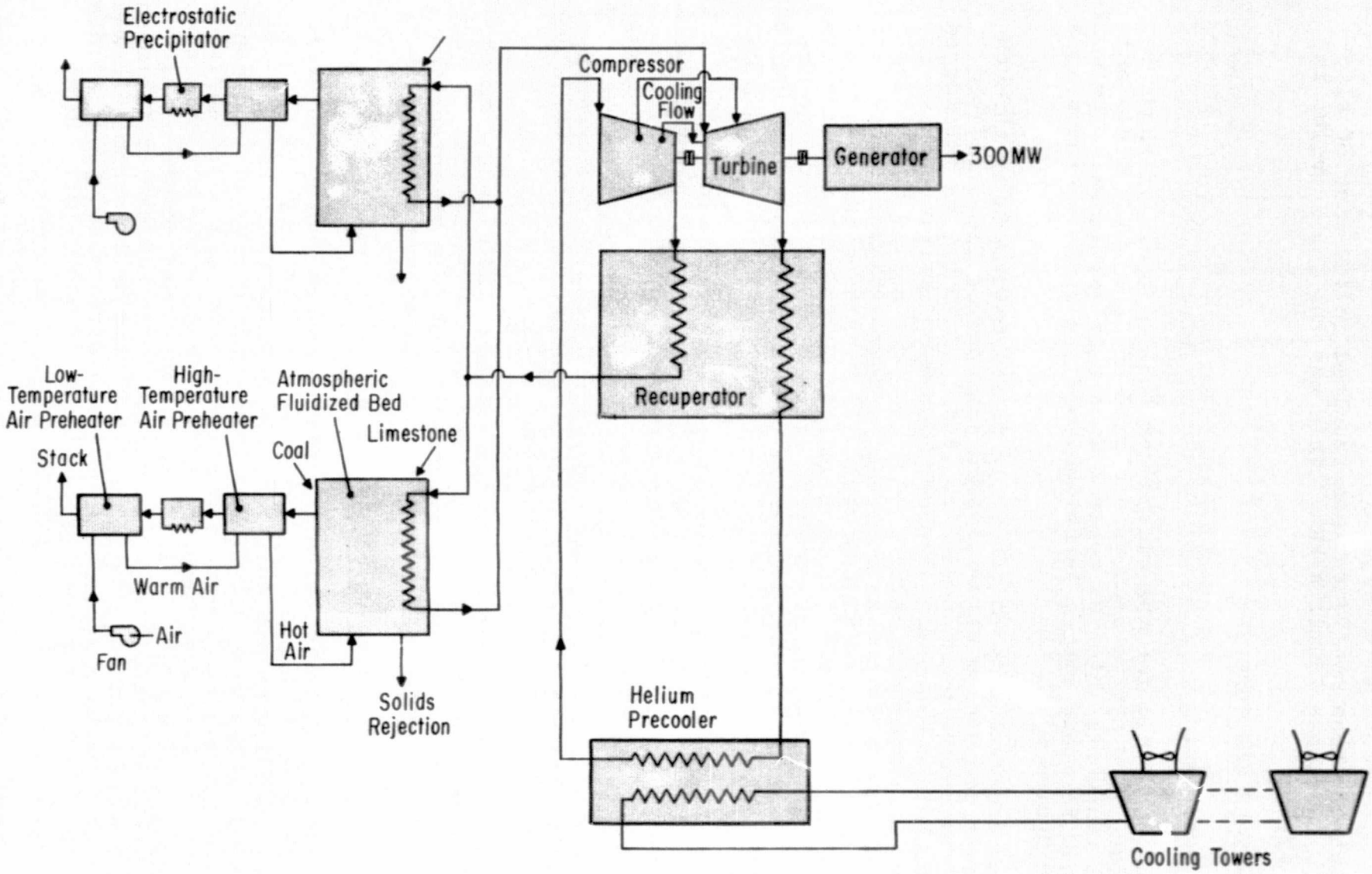

Figure 8. Closed-Cycle Gas Turbine

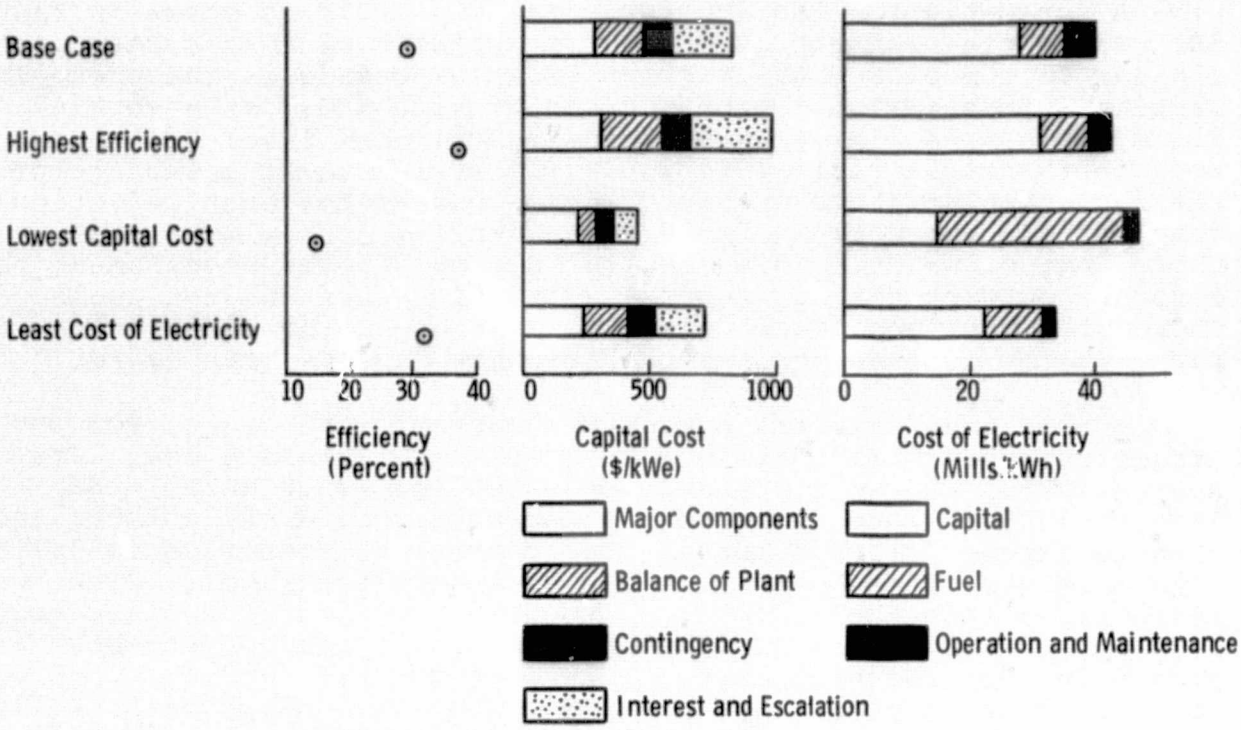

Figure 9. Closed-Cycle Gas Turbine

The closed gas turbine featured lower balance-of-plant cost than any of the other closed cycles. These lower costs, combined with low $/kW rotational equipment costs, produced low total capital costs and small capital charges. The efficiency value for the case with lowest cost of electricity was approximately 30 percent. This resulted in higher fuel charges and a near balance between capital and operating (fuel plus operating and maintenance) charges. The low capital charges did, however, result in a competitive cost of electricity.

The organic bottoming cycle appeared to be more attractive from a performance and economic standpoint than the steam bottoming cycle for low-temperature operation.

SUPERCRITICAL CO_2 CYCLE

System Description

A schematic for the supercritical CO_2 cycle is shown in Figure 10. The cycle characteristics and components of this system are similar to the closed gas turbine cycle discussed in the preceding section. This system employs carbon dioxide (CO_2) as a working fluid, with pressures always above the critical level and therefore in the supercritical region. The system takes advantage of the fact that at these pressure levels and at the heat rejection temperature, the working fluid has a density approximately one third that of water. This results in a much lower requirement for compression work than is necessary in a standard Brayton cycle. Therefore, the mechanical regeneration (turbine power to drive pumps and/or compressors) approaches that of a Rankine cycle.

In the base case the energy was added to the cycle from the direct combustion of coal in an atmospheric fluidized bed. The supercritical CO_2 at a pressure of $\sim$3800 psi (26.2 MN/m^2) and 1350 F (1005 K) goes first to a compressor/pump drive turbine and then to a power drive turbine. The thermal regeneration is split into a series of high- and low-temperature recuperators. The heat is rejected from the cycle in a precooler coupled to cooling towers by a water loop. A recompression cycle was employed, as shown in Figure 10, for the base case. This configuration employs both a compressor and a pump. By this split compression approach, a flow mismatch is created in the low-temperature recuperator which results in improved cycle performance.

The parametric cases included variations in the turbine inlet temperature (to a maximum of 1600 F [1144 K]) and compressor pressure ratio. The performance characteristics of the recuperator and the loop pressure drop were also varied. The heat input system was varied to evaluate the direct combustion of coal in a pressurized fluidized bed and the use of clean gas, both low-Btu with an integrated low-Btu gasifier, and high-Btu in a pressurized furnace.

The characteristics of this system are such that the temperature of working fluid exiting from the low-temperature recuperator is too low to permit effective employment of a bottoming cycle. This optional configuration was therefore not considered.

System Results and Discussion

A summary of the results for this advanced energy conversion system is shown in Figure 11. The supercritical CO_2 cycle is capable of achieving relatively good efficiencies. The highest efficiency was $\sim$42 percent and was achieved with a base case configuration and a higher pressure ratio. A characteristic of this cycle is a combination of high pressures and high temperatures in the major components. This resulted in capital costs of $\sim$\$1800/kW for most

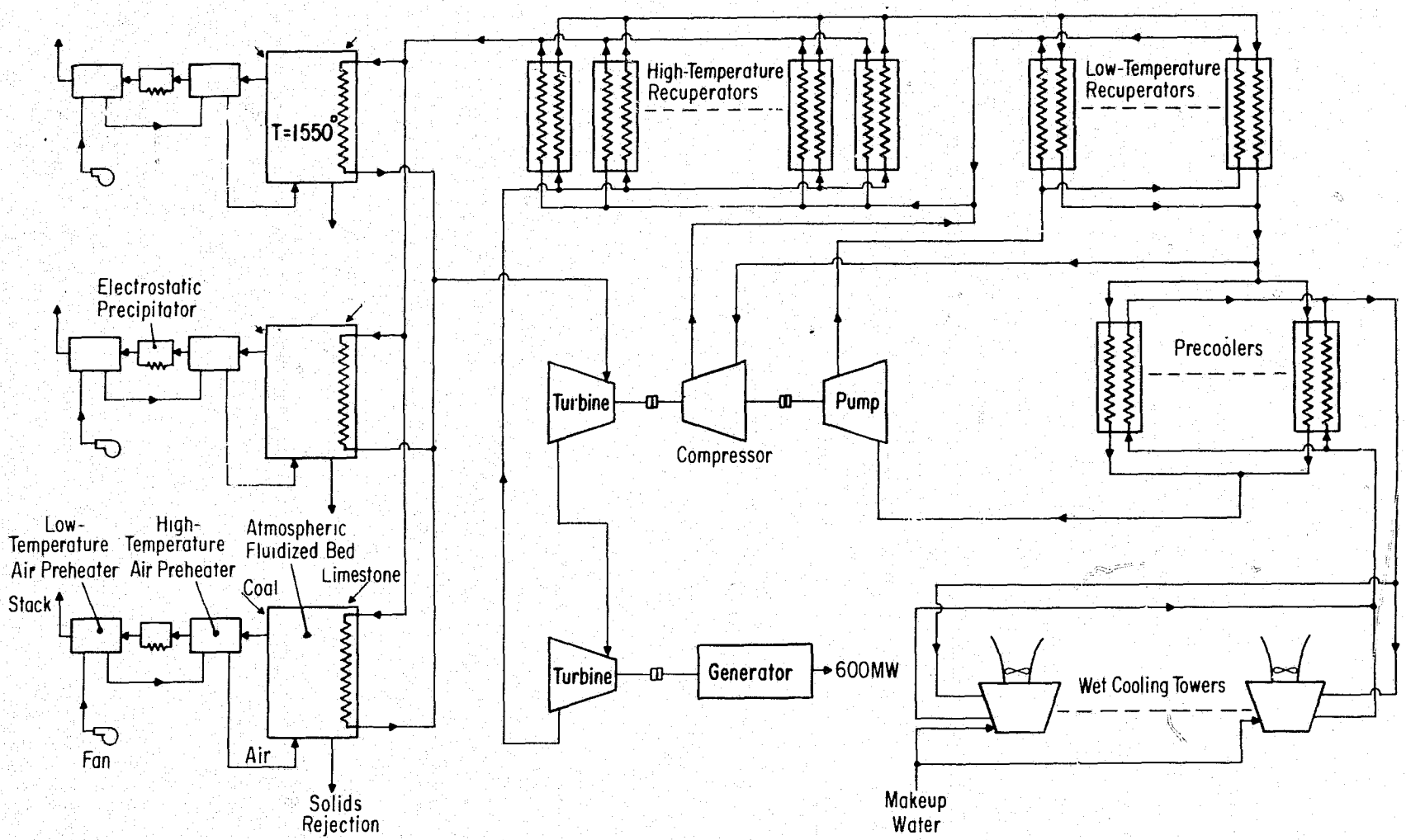

Figure 10. Supercritical CO_2 Cycle

REPRODUCIBILITY OF THE ORIGINAL PAGE IS POOR.

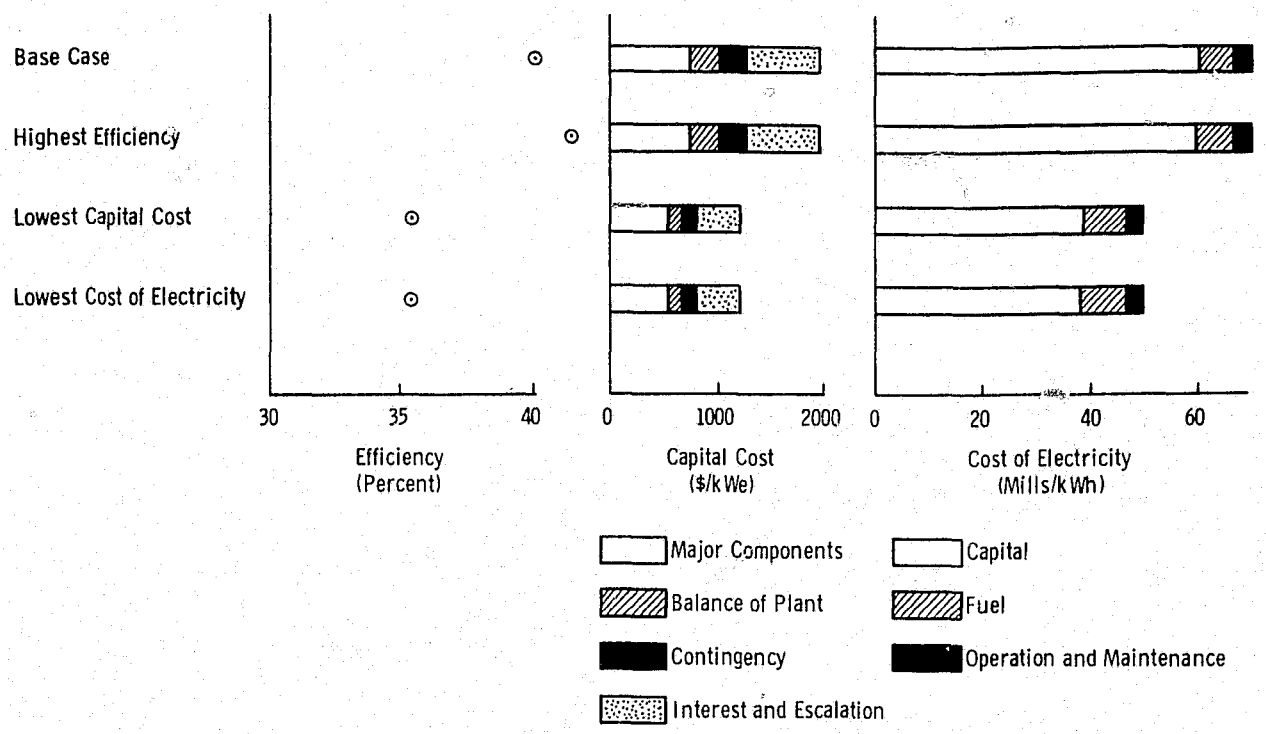

Figure 11. Supercritical CO_2

parametric cases. The lowest capital cost and lowest cost of electricity were obtained through employment of the pressurized furnace with integrated low-Btu fuel supply. This heat input concept supplied to the system an amount of power approximately equal to that obtained from the supercritical CO_2 turbine. This relatively cheap, gas turbine power addition from the heat input system decreased the capital cost of the power plant on a dollar per kilowatt basis.

The high efficiency level did result in low coal consumption values. The low compression power requirement resulted in a work output regeneration of only 20 percent. The system did however require a large thermal regeneration. Approximately 2.5 times the thermal input was regenerated in the recuperators.

The combination of high temperatures and high pressures coupled with large thermal transport requirements resulted in high costs for the heat exchange equipment. The projected employment of uncooled rotational equipment operating at these high-pressure and high-temperature levels resulted in high rotational equipment costs.

The capital charges for this system overshadowed the reduction in fuel charges resulting from more efficient cycle operation.

ADVANCED STEAM CYCLE

System Description

A schematic for the advanced steam cycle is shown in Figure 12. This configuration is very similar to steam cycles in conventional utility service.

The base case employs heat input to the cycle through the direct combustion of coal in an atmospheric fluidized bed. In this case the steam throttle conditions are 3500 psi (24.1 MN/m^2) and 1200 F (922 K). A single reheat to 1000 F (811 K) is utilized. A multiple flow low-pressure unit makes up the remaining turbine drive system. The condenser back pressure is maintained at 1.5 in. Hga (5.06×10^3 N/m^2) in this case. Steam extraction is employed for feedwater heating.

The parametric cases include variations in both throttle and reheat steam temperature (a maximum of 1200 F [922 K] on throttle and 1400 F [1033 K] on reheat) and maximum cycle pressure. The feedwater temperature and condensing temperature are also varied. The heat input system variations include direct combustion of coal in a pressurized fluidized bed, combustion of clean gases in a pressurized furnace, and combustion of both coal and semi-clean liquid fuel in a conventional furnace with appropriate exhaust gas cleanup systems. A double reheat case was also evaluated.

System Results and Discussion

A summary of the results for this advanced energy conversion system is shown in Figure 13. The efficiency values are in the mid to upper thirties. The maximum efficiency of approximately 40 percent occurred with the parametric case employing double reheat to 1200 F (922 K) and with a throttle temperature of 1000 F (811 K). The lowest capital cost and lowest cost of electricity were obtained with standard steam conditions of 3500 psi/1000 F/1000 F (24.1 MN/m^2/811 K/811 K) and an atmospheric fluidized bed heat input system.

Overall efficiencies of greater than forty percent are achievable with advanced steam conditions. However, at these higher steam temperatures, the increase in capital charges resulting from increased major equipment cost offsets the reduced fuel charges resulting from increased efficiency. The advanced steam condition case therefore resulted in a higher cost of electricity than would be expected from the more standard conditions. This increase in capital cost of major components was due mainly to the steam turbine. Higher steam conditions can be attained in fluidized beds with little increase in furnace costs. The balance-of-plant costs were not greatly influenced by the advanced conditions.

The pressurized fluidized bed coupled to the most efficient steam cycle has the greatest potential for maximum efficiency,

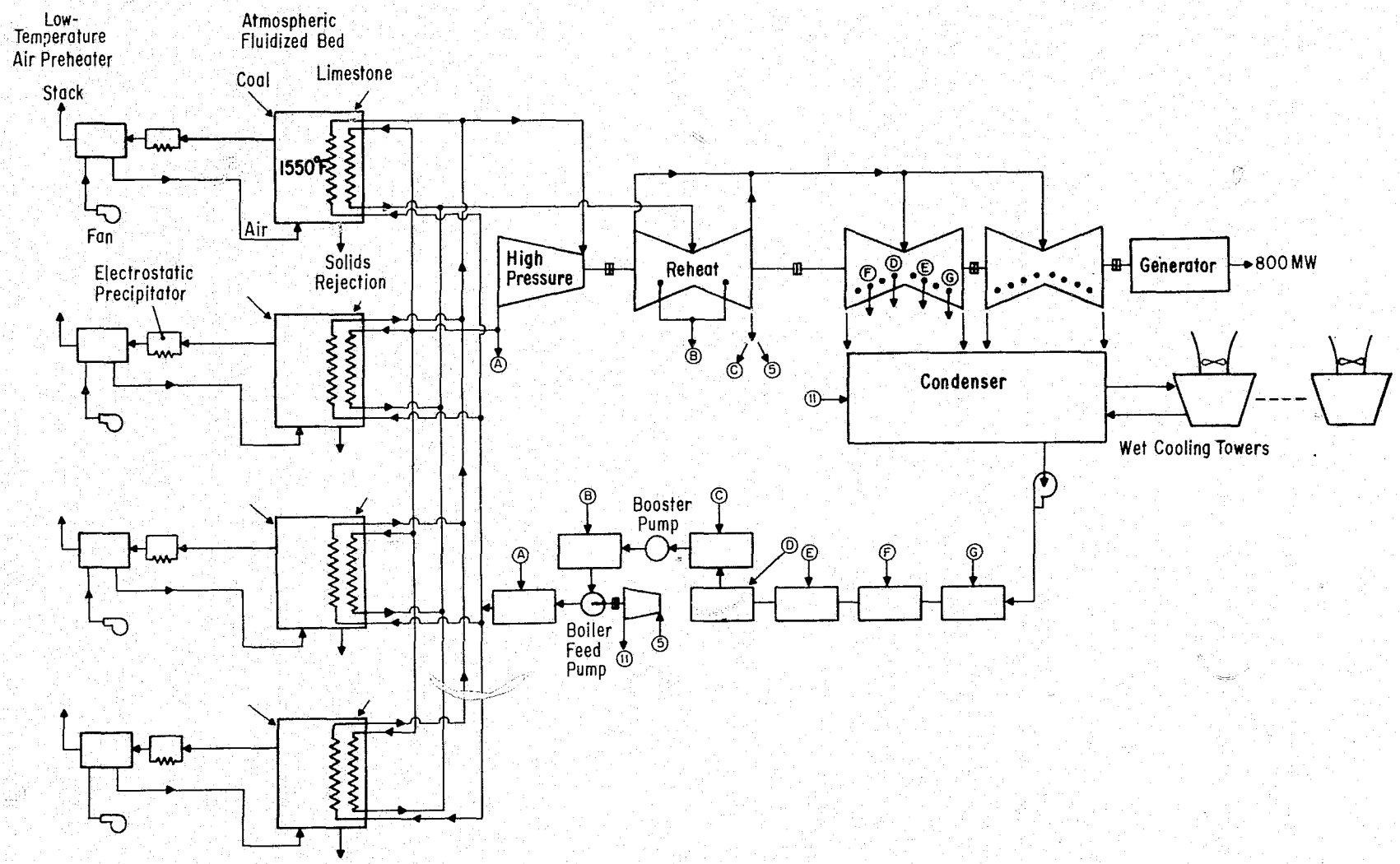

Figure 12. Advanced Steam Cycle

REPRODUCIBILITY OF THE
ORIGINAL PAGE IS POOR

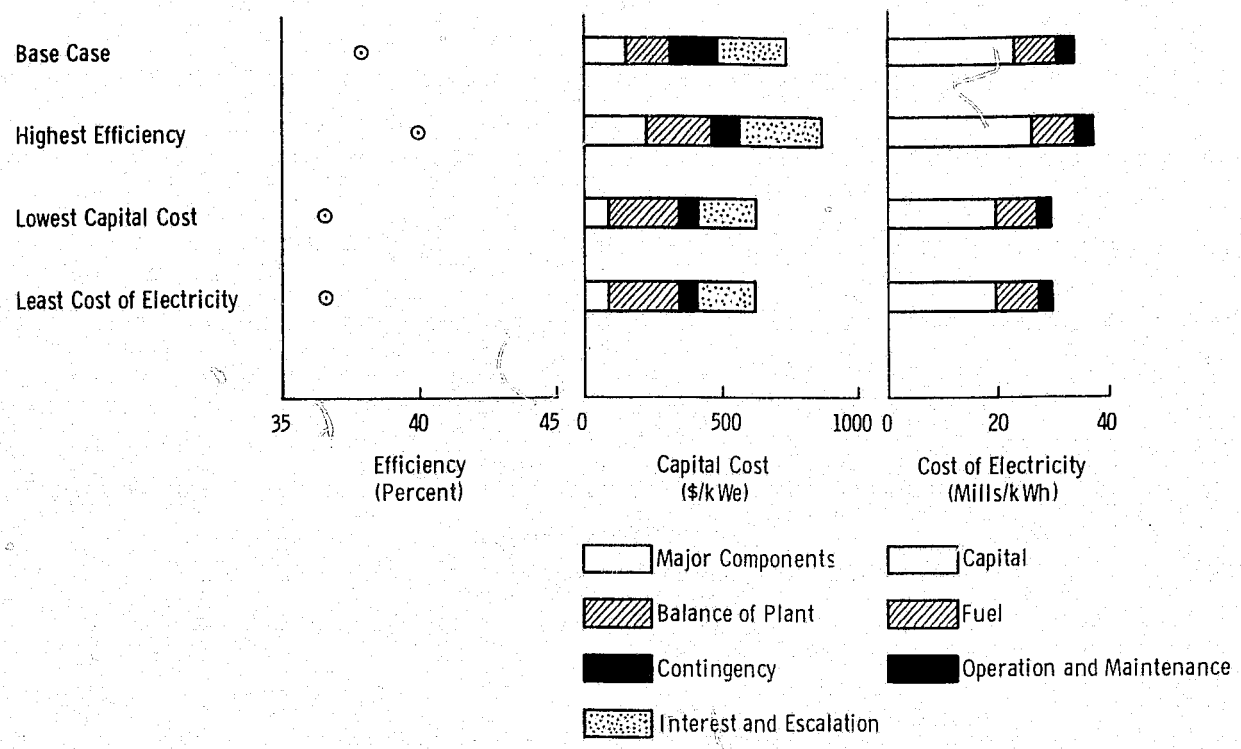

Figure 13. Advanced Steam

and efficiencies in excess of 40 percent can be projected for this configuration. The pressurized fluidized bed did not appear as economically attractive as the atmospheric fluidized bed system. There are also technical uncertainties in the high-temperature gas cleanup system required for pressurized fluidized bed operation.

The conventional coal-fired radiant furnace with stack gas cleanup did not appear as economically attractive as some of the other heat input systems. Extension to advanced steam conditions is also more difficult in this type of heat input system.

LIQUID METAL TOPPING CYCLE

System Description

A schematic of the liquid metal topping cycle is shown in Figure 14. This system utilizes liquid metal vapor to achieve high cycle operating temperature without excessively high pressures and is a true topping cycle. All energy is added to the prime cycle working fluid, and the rejected energy from the prime cycle cascaded into a steam bottoming cycle.

The base case for this system employs direct combustion of coal in an atmospheric fluidized bed. The liquid metal, potassium, entering the furnace module as a subcooled liquid, is vaporized and exits as a vapor at 1400 F (1033 K). This vapor is expanded

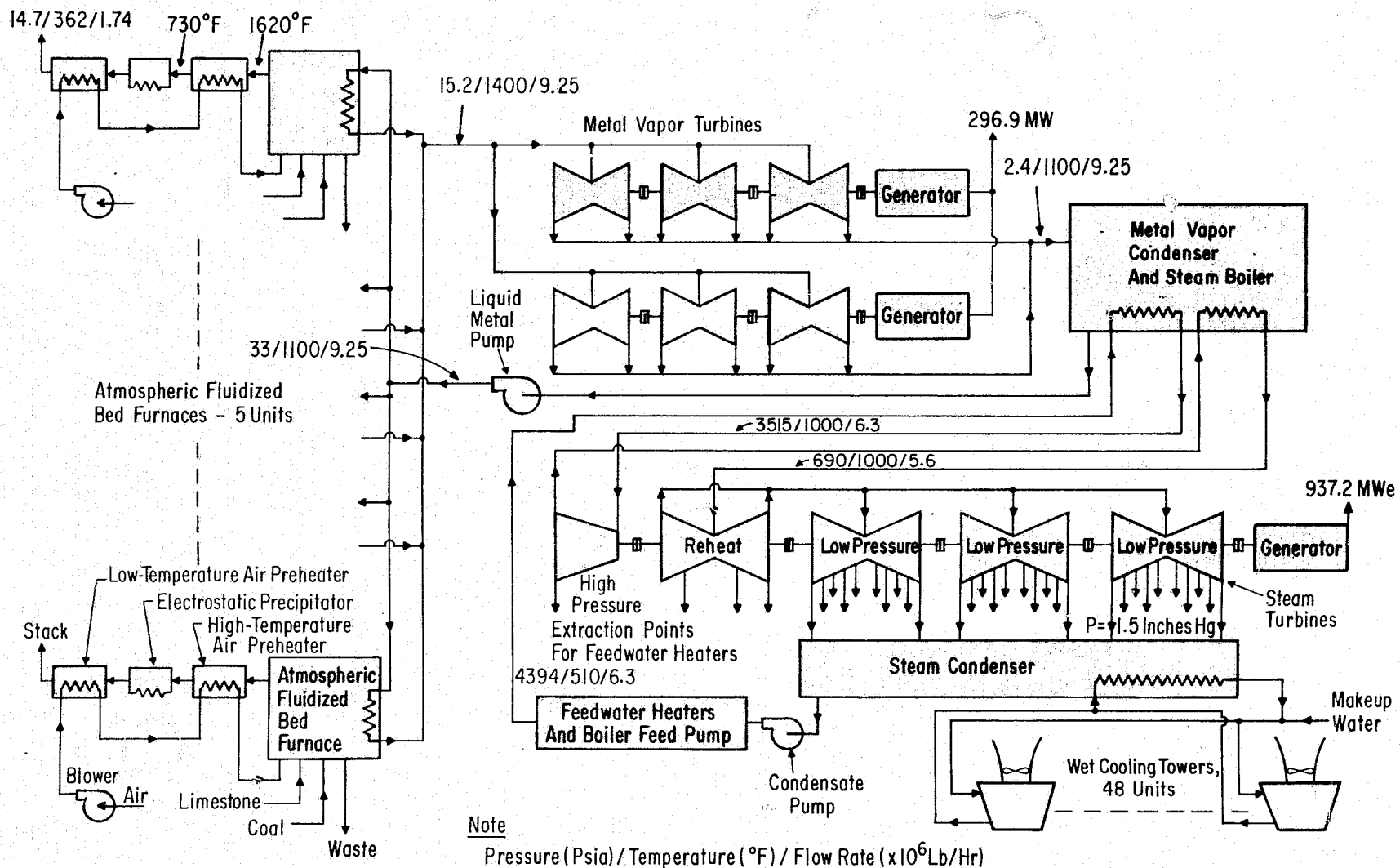

Figure 14. Liquid Metal Topping Cycle

in a multiflow metal vapor turbine arrangement: 2 turbine generator trains, each with 3 double flow turbine units. The expanded vapor exiting from the turbine at 1100 F (867 K) is condensed in a metal vapor condenser-steam boiler, and the liquid metal condensate is returned to the furnace by a pump. The heat of condensation is utilized to superheat and reheat steam for a 3500 psi/1000 F/1000 F (24.1 MN/m^2/811 K/811 K) steam cycle. The steam cycle is of standard design with full extraction employed for feedwater heating. The heat rejection from the system is from the steam condenser operating at 1.5 in. Hga (5.06×10^3 N/m^2).

The parametric points included variations in metal vapor turbine inlet temperature (to a maximum of 1700 F [1200 K]) and metal vapor condensing temperature. The maximum steam temperature in the bottoming cycle was matched to the metal vapor condensing temperature and varied in order to maintain a good condenser-boiler design. Potassium was employed as the liquid metal working fluid for all but two cases; those cases utilized cesium. Direct combustion of coal in a pressurized fluidized bed was also evaluated as a heat input system along with the combustion of clean gases in a pressurized furnace. In both of these furnace systems, substantial electrical generation was obtained from the pressurizing gas turbines.

System Results and Discussion

A summary of results for this advanced energy conversion system is shown in Figure 15. The overall efficiency of the liquid metal topping cycle was consistently in the high thirty to low forty percent range. The maximum efficiency was achieved with the case utilizing base case conditions and cesium as the working fluid. The capital costs for most of the parametric points were approximately $1100/kW. The lowest capital cost case occurred with a pressurized furnace utilizing high-Btu gas. In this case, approximately 50 percent additional power was generated in the pressurizing gas turbines at relatively low capital cost, thus reducing the per kilowatt cost of the entire system. The lowest cost of electricity, ∿40 mills/kWh, was obtained with base case conditions and combustion of coal directly in a pressurized fluidized bed.

This advanced energy conversion system featured relatively high overall efficiency and high capital costs. The potential exists for obtaining even higher efficiencies by reducing auxiliary losses. For example, a reduction of the recirculation pumping requirement in the liquid metal boilers could be achieved by boiler redesign. The complexity of the heat exchanger equipment resulted in high capital costs for these components. The high-temperature piping and difficult component arrangement requirements produced high balance-of-plant costs. These two items contributed to the rather high capital costs and resulting high cost of electricity.

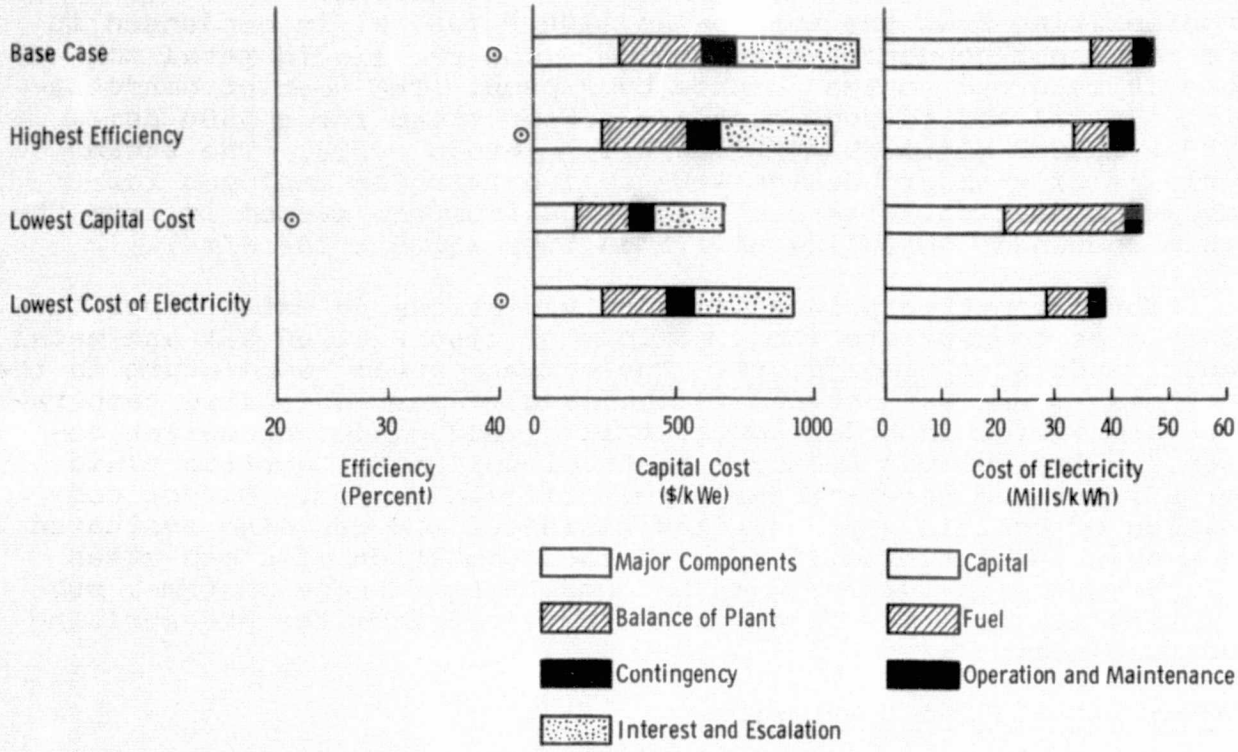

Figure 15. Liquid Metal Topping

OPEN-CYCLE MHD

System Description

A schematic for the open-cycle MHD system is shown in Figure 16. This system features direct generation of d-c power as the products of combustion pass through the MHD generator. In the base case, the combustor is fired with pulverized coal, and slag is rejected from the combustor. Potassium carbonate is introduced as a seeding material to increase the electrical conductivity of combustion products. The MHD generator is water cooled. A strong magnetic field is maintained with a superconducting magnet. A radiant furnace accepts the exhaust from the MHD diffuser, and its water wall construction is utilized for steam generation. The radiant furnace also allows the residence time necessary at appropriate temperatures for limitation of the NO_x emission. The exhaust from the radiant furnace (still at temperatures in excess of 2500 F [1644 K]) enters a series of regenerative high-temperature air preheaters. These are of the ceramic, checker brick design and are alternately heated by the exhaust gas and cooled by the combustion air in order to obtain the required air preheat temperature. The gas exiting from the high temperature air preheater flows in parallel through a low-temperature air preheater and a steam superheater and reheater. The particulates are removed from the combustion gases in an electrostatic precipitator and then pass through a feedwater economizer before exiting from the stack.

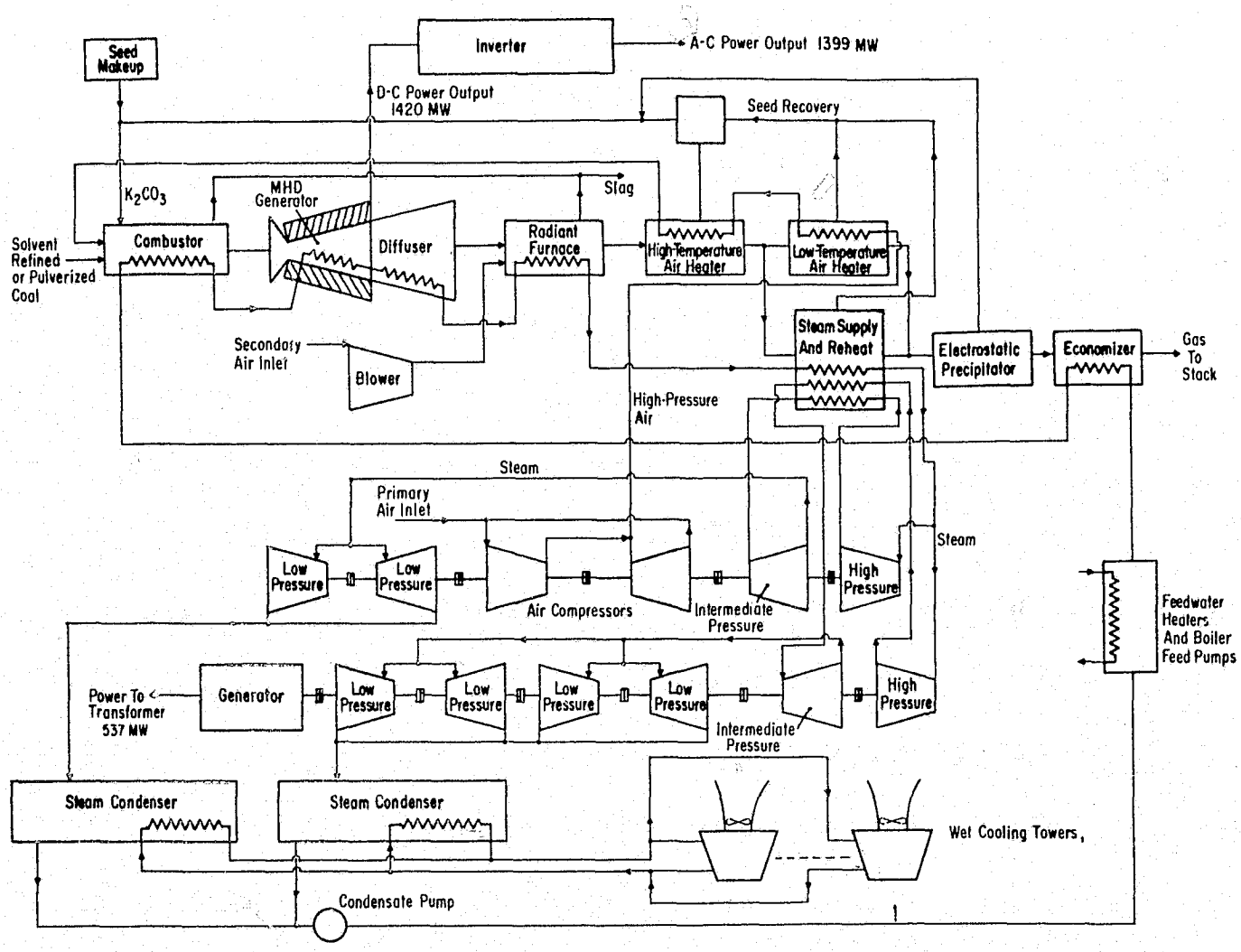

Figure 16. Open-Cycle MHD Cycle

Steam flow is employed both for component cooling of the combustor, MHD generator, and diffuser, and as a heat recovery bottoming fluid in the radiant furnace, superheater, reheater, and economizer. The generated steam is used in a parallel train of steam turbines, both trains operating at 3500 psi/1000 F/1000 F (24.1 MN/m^2/811 K/811 K). One train is employed for compressor drive to supply the compressed air to the combustion chamber. The other train generates additional electrical output. The shaft power output was approximately equal for the two steam turbine trains.

In addition to increasing the conductivity of the combustion products, the seed material, K_2CO_3, is also used to tie up the sulfur in the combustion gas. The seed material is recovered from the heat exchanger equipment in solid form, processed to remove the sulfur, and recycled to the combustor.

The d-c output is converted to a-c in inverter equipment.

The base case operates on direct firing of coal with an air preheat temperature of 2500 F (1644 K). The parametric cases included variations in air preheat temperature (to a maximum of 3100 F [1978 K]) and the use of a semi-clean liquid fuel (SRC). A case of oxygen enrichment of the combustion air was also evaluated. The average magnetic field strength was varied from a base case value of 5 tesla to a maximum of 7 tesla. The inlet fluid pressure to the MHD generator and the electric load parameter were also variables.

The steam bottoming cycle employed standard pressure and temperature conditions. A full set of extraction feedwater heaters was not employed. A feedwater temperature of 232 F (384 K) was used to supply a low-temperature heat sink for the exhaust gases in the economizer.

System Results and Discussion

A summary of results for this advanced energy conversion system is presented in Figure 17. The open-cycle MHD system is characterized by high efficiencies, values of ∿50 percent for all direct fired coal cases. As would be expected, the maximum efficiency was achieved with the highest value of air preheat and inlet pressure. The capital costs for this system were generally in excess of $1000/kW. The lowest capital costs were obtained with semi-clean liquid fuel. However, an overall efficiency penalty is also sustained as a result of the process fuel conversion efficiency. The costs of electricity were in the low to mid forties for all cases, the major contribution to the cost of electricity being the capital charge.

The efficiencies estimated for the open-cycle MHD system were the highest in the study. These high efficiencies resulted in low specific coal consumption and low effluent production per kilowatt. Efficiencies of 50 percent can be projected through a variety of approaches.

The high capital costs were attributable to the balance-of-plant costs and the interest and escalation during the construction of this rather complex plant. The major components category contributed approximately 10 percent to the total capital cost.

The attractiveness of this advanced energy conversion system depends upon the ability to achieve the estimated performance while obtaining high reliability. The extremely high temperatures and corrosive combustion products present several materials problems for all equipment in the hot gas path. Solutions to these materials problems and the demonstration of environmental acceptability with the proposed control techniques are key items required for the successful development of open-cycle MHD systems.

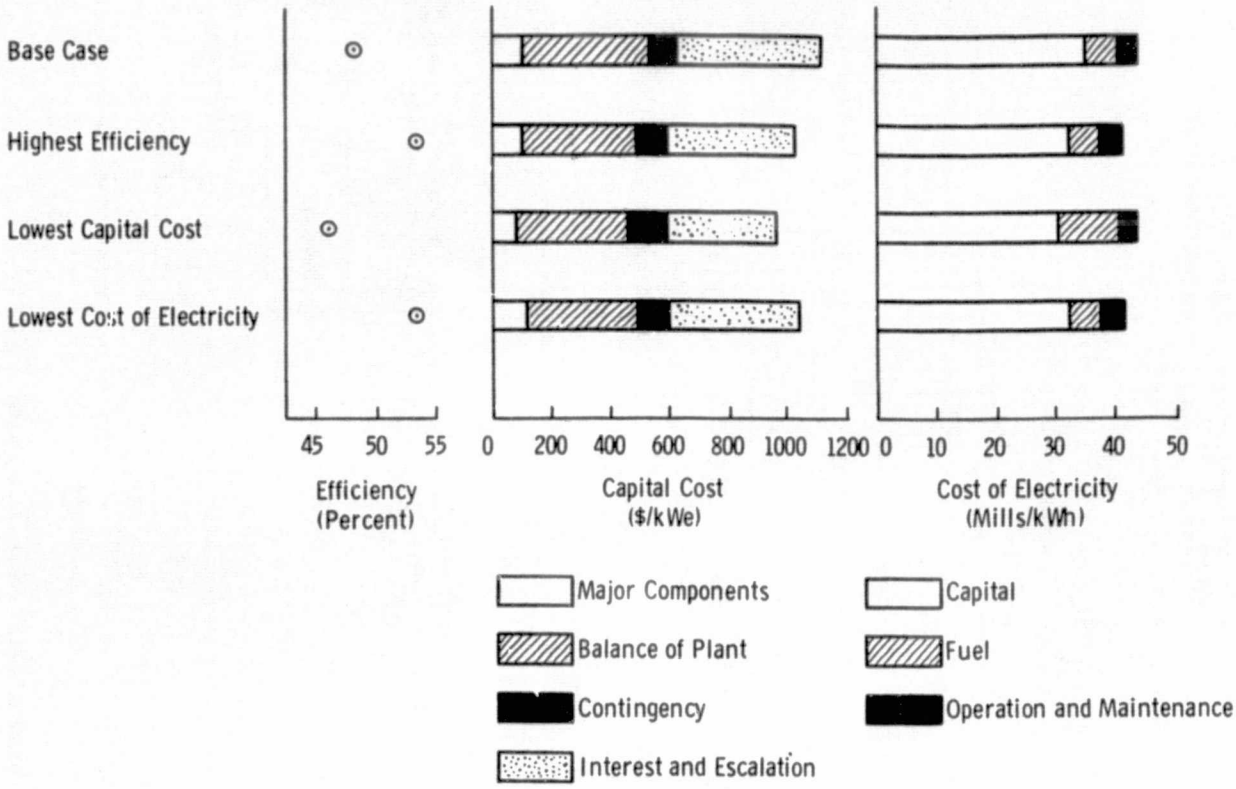

Figure 17. Open-Cycle MHD

CLOSED-CYCLE INERT GAS MHD CYCLE

System Description

A schematic of the closed-cycle inert gas MHD system is shown in Figure 18. In this concept, direct generation of d-c output is achieved by the flow of a seeded inert gas through the MHD generator. Acceptable values of electrical conductivity in the working fluid passing through the MHD generator are achieved by the non-equilibrium effect of the seeded inert gas; therefore maximum working fluid temperatures are significantly lower than the open-cycle MHD concept. The maximum temperature for the base case was 3000 F (1922 K).

In this system, fuel is combusted in a combustion chamber in the presence of preheated air (at preheat temperatures less than 1000 F [811 K]). The combustion gases are used to heat up regenerative, ceramic checker brick heat exchangers. The heat exchangers are alternately heated by the combustion gases and cooled by the inert gas cycle working fluid. The heated inert gas is then seeded with cesium and passed through the MHD generator. The energy in the exit gas is recovered in a steam generator before going to the heat exchanger, where heat is rejected from the cycle to a cooling tower. A steam turbine is driven from the

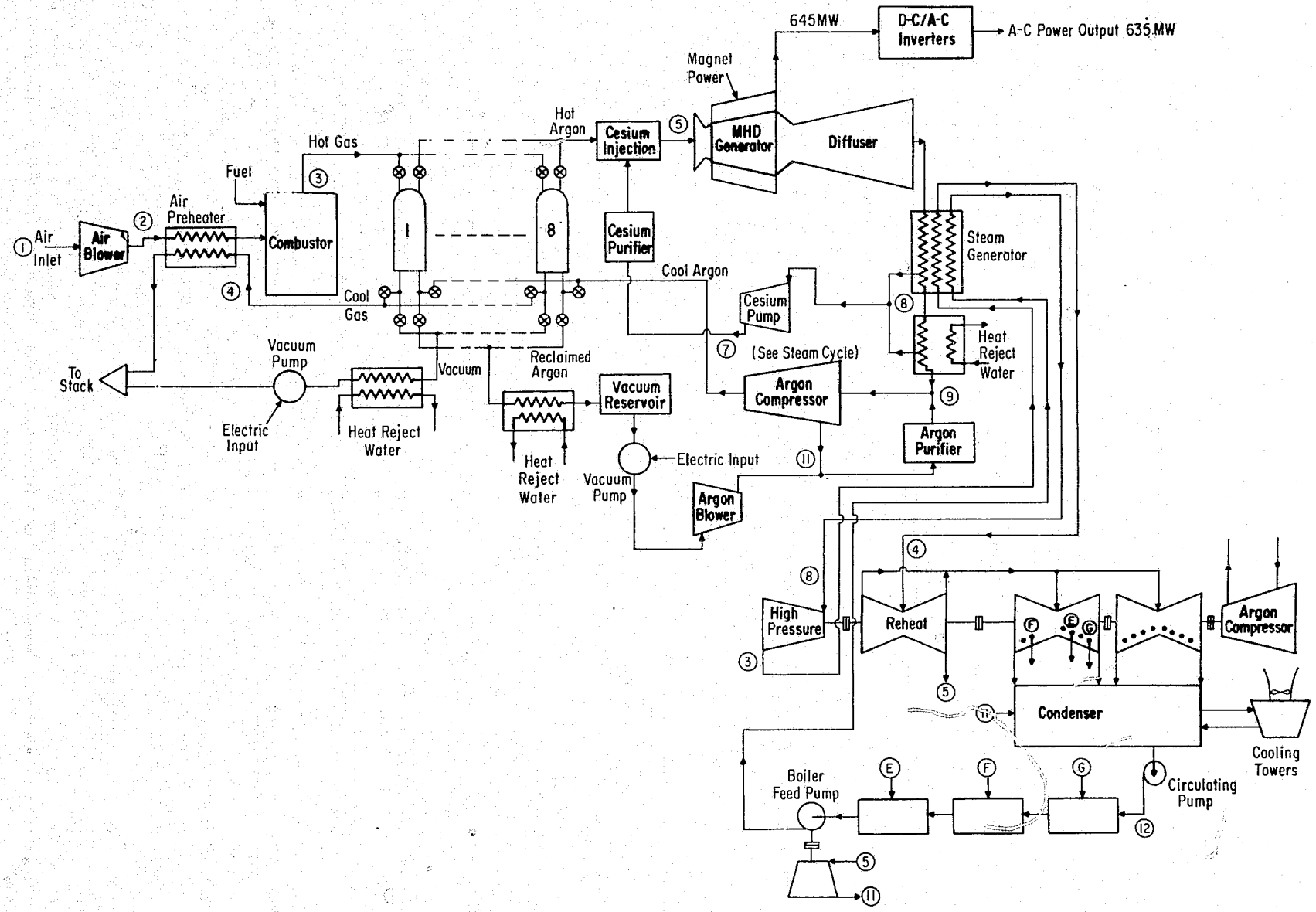

Figure 18. Closed-Cycle Inert Gas MHD Topping Cycle

REPRODUCIBILITY OF THE ORIGINAL PAGE IS POOR

generated steam at standard conditions of 3500 psi/1000 F/1000 F (24.1 MN/m^2/811 K/811 K). The output of this steam turbine is consumed in driving the inert gas working fluid compressor.

A vacuum system is provided to evacuate the regenerative heat input heat exchangers after heating with the combustion gases and prior to introducing the working fluid. This is required to prevent contamination of the working fluid and consequent loss of the non-equilibrium effect in the MHD generator.

One base case cycle was a topping cycle, as shown in Figure 18. Another configuration which was evaluated was a parallel cycle in which the energy in the exhaust of the MHD diffuser was recuperated by heat transfer to the working fluid exiting the inert gas compressor, thus increasing the temperature of high-pressure working fluid en route to the heat input heat exchanger. A steam cycle was placed in the combustion gas exhaust stream from the heat input heat exchanger. The output of this steam cycle supplied the compressor drive power for the working fluid compressor.

In all systems employing direct combustion of coal, a stack gas cleanup system was utilized to meet the SO_X requirement.

Argon was employed as a working fluid for both cycle configurations, and cesium was the seeding material. For the topping cycle (shown in Figure 18), direct fired coal, semi-clean liquid fuel (SRC), and intermediate-Btu gas were evaluated as fuels. The average highest field strength, "turbine effectiveness," MHD inlet pressure and temperature (to maximum values of 20 atm [2.02 MN/m^2] and 3800 F [2367 K]) were varied for both configurations. In the parallel cycle only direct combustion of coal was used.

The steam cycle for both configurations employed standard conditions of 3500 psi/1000 F/1000 F (24.1 MN/m^2/811 K/811 K). For the topping cycle, a partial extraction feedwater heating system was used. For the parallel cycle, an entire complement of feedheaters was used.

System Results and Discussion

A summary of the results for this advanced energy conversion system is presented in Figure 19. The parallel cycle did not result in attractive efficiencies or costs. The efficiency of the topping cycles utilizing process fuel was reduced because of the inefficiency of producing the fuel, which resulted in reducing the power plant efficiency values (in the forty percent range) to overall efficiencies in the low thirty percent range. The highest efficiencies, lowest capital cost, and lowest cost of electricity were estimated for cases employing the direct combustion of coal in a topping cycle. This resulted in efficiencies in the mid forty percent range, capital costs of ∿$1100/kW, and cost of electricity of ∿45 mills/kWh.

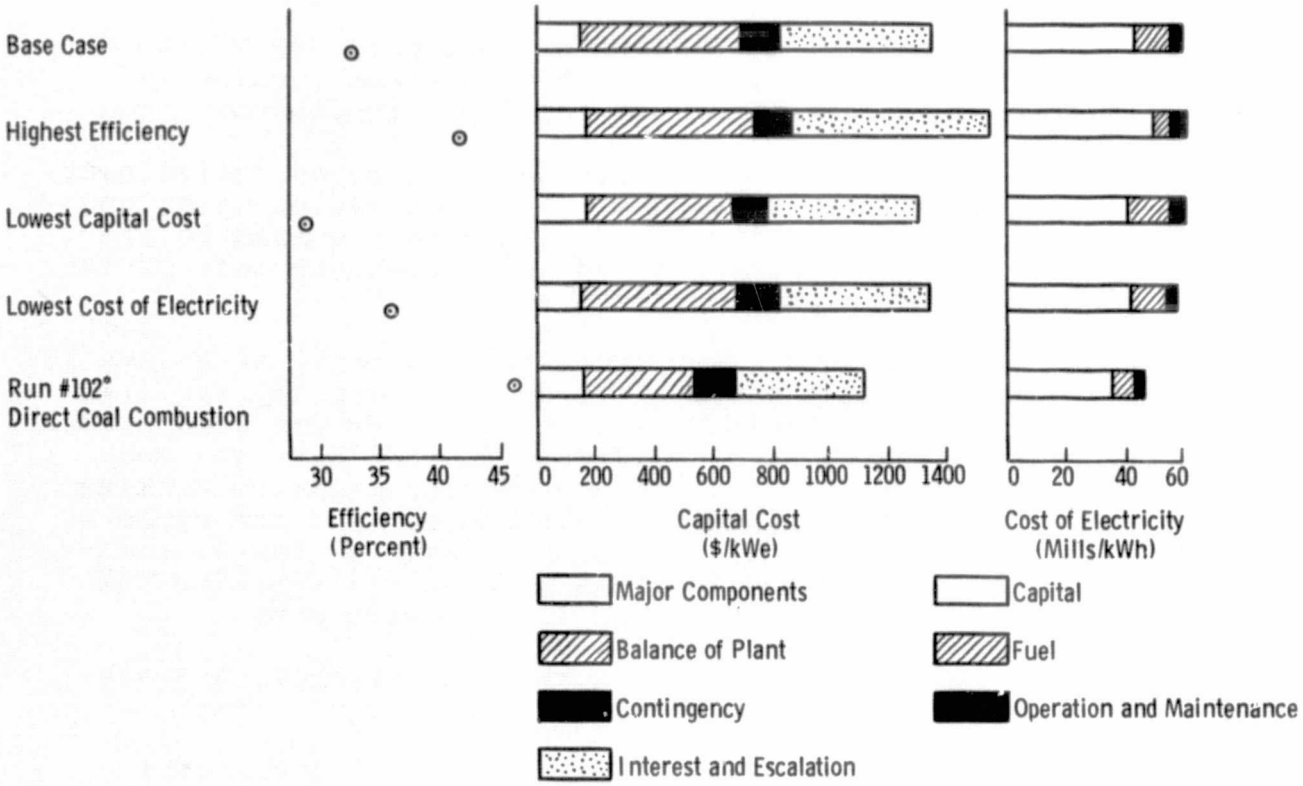

*Note: Case No. 102 run evaluated after the completion of other Task I points had the higher efficiency, lower capital cost, and lower cost of electricity.

Figure 19. Closed-Cycle Inert Gas MHD

A significant fraction of the capital cost of this system is in the balance of plant and the interest and escalation during construction. These high charges resulted from the complex equipment arrangement and the need to duct high-temperature gases (in excess of 3000 F [1922 K]) at high mass flow rates.

The use of direct coal firing in a topping cycle could present design problems for the regenerative heat input heat exchangers. Since the combustion gases exit from the heat exchanger at temperatures below the slag solidification temperature, plugging of the passages could occur. It also remains to be demonstrated that the non-equilibrium effect can be maintained in the presence of possible contamination of the working fluid by residual combustion products in the regenerative heat exchangers.

CLOSED-CYCLE LIQUID METAL MHD CYCLE

System Description

A system schematic for the closed-cycle liquid metal MHD system is shown in Figure 20. In this concept, d-c power is generated directly as the working fluid, helium, is expanded in the MHD generator. The liquid metal, mixed with the helium before expansion, supplies the electrical conductivity required by the

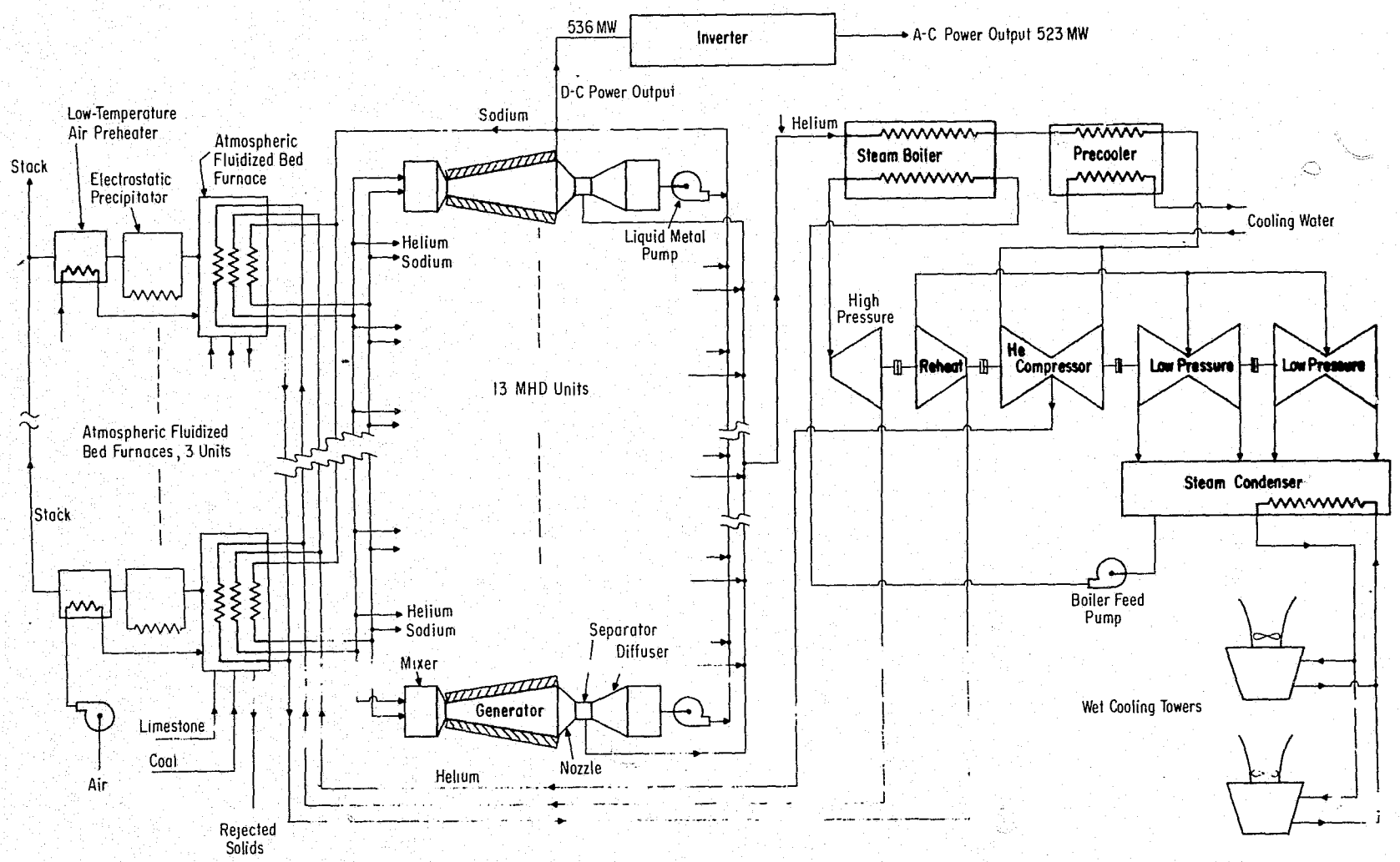

Figure 20. Closed-Cycle Liquid Metal MHD Cycle

REPRODUCIBILITY OF THE
ORIGINAL PAGE IS POOR

working fluid. Since the electrical conductivity of the working fluid is obtained through addition of the liquid metal, it does not require the extremely high temperatures as in the two preceding MHD cases.

For the base case shown in Figure 20, direct combustion of coal in an atmospheric fluidized bed is utilized to supply the energy input to the cycle. The furnace is utilized to heat the helium working fluid and the liquid metal and to reheat the steam from the steam bottoming cycle. The helium and liquid metal are mixed and flow through the MHD generator. At the generator exit, the helium and liquid metal are separated. The liquid metal is increased in pressure through a series diffuser/pump arrangement before returning to the furnace for heating. After expansion in the generator the helium passes through a heat recovery boiler. Heat is rejected from the cycle in a precooler-cooling tower system and the helium is then compressed before returning to the furnace.

The steam generated in the steam turbine is used to drive the helium compressor. In order to extract the maximum amount of heat from the helium prior to precooling, no extraction feedwater heating is performed in the steam cycle. For all cases, the steam cycle operates at standard conditions of 3500 psi/1000 F/1000F (24.1 MN/m^2/811 K/811 K).

Since the performance of the MHD generator is not dependent on ionization of gases, its operation is at relatively low temperature, for example, 1300 F (978 K) for the base case. This was the temperature utilized for all cases in which sodium was the liquid metal. Higher temperatures (to a maximum of 1500 F [1089 K]) were employed in cases in which lithium was the liquid metal. The magnetic field requirements were relatively low, $\sim$1.0 tesla. This value and the pressure ratio and electric load parameters were varied.

Direct combustion of coal in a pressurized fluidized bed and combustion of clean gases in a pressurized furnace were evaluated as heat input heat exchanger variations.

A variation of the cycle configuration was also explored. This variation replaced the heat recovery boiler with a recuperative helium heat exchanger. This heat exchanger preheated the helium compressor discharge by cooling the helium exiting from the MHD duct.

System Results and Discussion

A summary of results for this advanced energy conversion system is shown in Figure 21. The efficiency for this system was in the mid to upper thirty percent range. The capital costs for the direct coal-fired atmospheric fluidized bed systems were greater than $2000/kW. The only significant capital cost reduction was

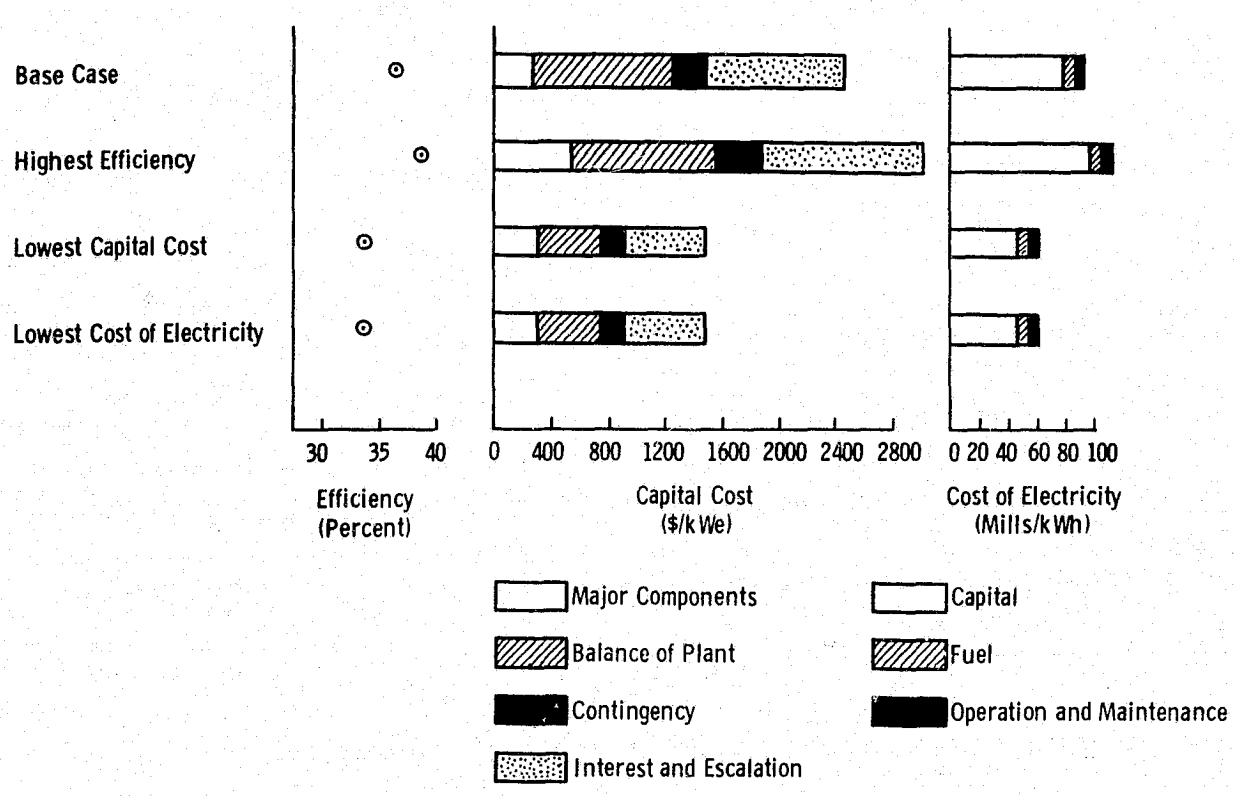

Figure 21. Closed-Cycle Liquid Metal MHD

achieved with the pressurized furnace systems. In these cases, substantial amounts of relatively low cost gas turbine power were produced by the furnace system. This reduced the average cost of the plant to approximately $1400/kW. However, this was also accompanied by a reduction in overall efficiency to the low thirty percent range. Nevertheless this configuration resulted in the lowest values of cost of electricity, ∿60 mills/kWh.

The highest efficiency, ∿39 per.ent, occurred with the lithium helium case at MHD inlet temperatures of 1500 F (1089 K). This system had a projected capital cost of more than $3000/kW.

A major contribution to the high capital costs was the requirement for many parallel generator units and the balance of plant required to support this complexity.

A severe pinch-point problem existed in the steam generator producing a requirement for low feedwater temperatures, with accompanying degraded steam cycle efficiency.

The characteristics of the system require massive circulation rates of liquid metal. Flow losses in the liquid metal flow load created severe auxiliary power demands on the cycle.

FUEL CELLS

System Description

A schematic for the low-temperature fuel cell is shown in Figure 22. Two specific fuel cell concepts were evaluated: 1) low temperature, less than 400 F (478 K), and 2) high temperature, approximately 1800 F (1255 K).

In the cases studied, the low-temperature fuel cell operates on process fuels, clean gases. In the base case, this clean fuel, high-Btu gas, was delivered to the plant site and re-formed there to a hydrogen fuel for use in the fuel cell. Air was the oxidizer, and before delivery to the fuel cell this air was humidified. The cell was water cooled. The d-c output was inverted to a-c for transmission.

For the low-temperature fuel cell, hydrogen delivered to the plant site was considered as a fuel variation. Oxygen delivered to the site was considered as an alternate oxidizer. The fuel cell type for the base case and a majority of the parametric cases was a solid polymer electrolyte. Phosphoric acid electrolyte was also evaluated in several cases. The current density, electrolyte thickness, and operating temperature were evaluated as parametric case variations with the solid polymer electrolyte. Current density was the only additional parameter varied in the phosphoric acid fuel cell investigation.

For the high-temperature fuel cell, a free standing, non-integrated, low-Btu fuel supply was employed. The electrolyte was a solid metallic; the oxidizer was air. After preheating the fuel was delivered to the fuel cell. This preheating was accomplished by thermal regeneration with the oxidizer exiting from the fuel cell. The fuel exiting from the fuel cell retained some heating value. This fuel and the oxidizer exiting from the fuel preheater were combusted in a steam boiler-reheater, supplying the energy input for a 3500 psi/1000 F/1000 F (24.1 MN/m^2/811 K/811 K) steam bottoming cycle. The exhaust gas from the combustor-boiler was cooled to 300 F (422 K) in an air preheater. The d-c output of the fuel cell was inverted to a-c. In the plant size investigated, both the fuel cell topping cycle and the steam bottoming cycle produced approximately 550 MW.

In the high-temperature fuel cell, the electrolyte thickness and the current density were the only parametric variations.

System Results and Discussion

A summary of the results for this advanced energy conversion system is shown in Figure 23. The low-temperature fuel cell operated only on process, clean gases. Thus, the overall efficiency was approximately 50 percent less than the power plant efficiency as a result of the conversion efficiency of the fuel processing plant to produce clean gas from coal. For the parametric points

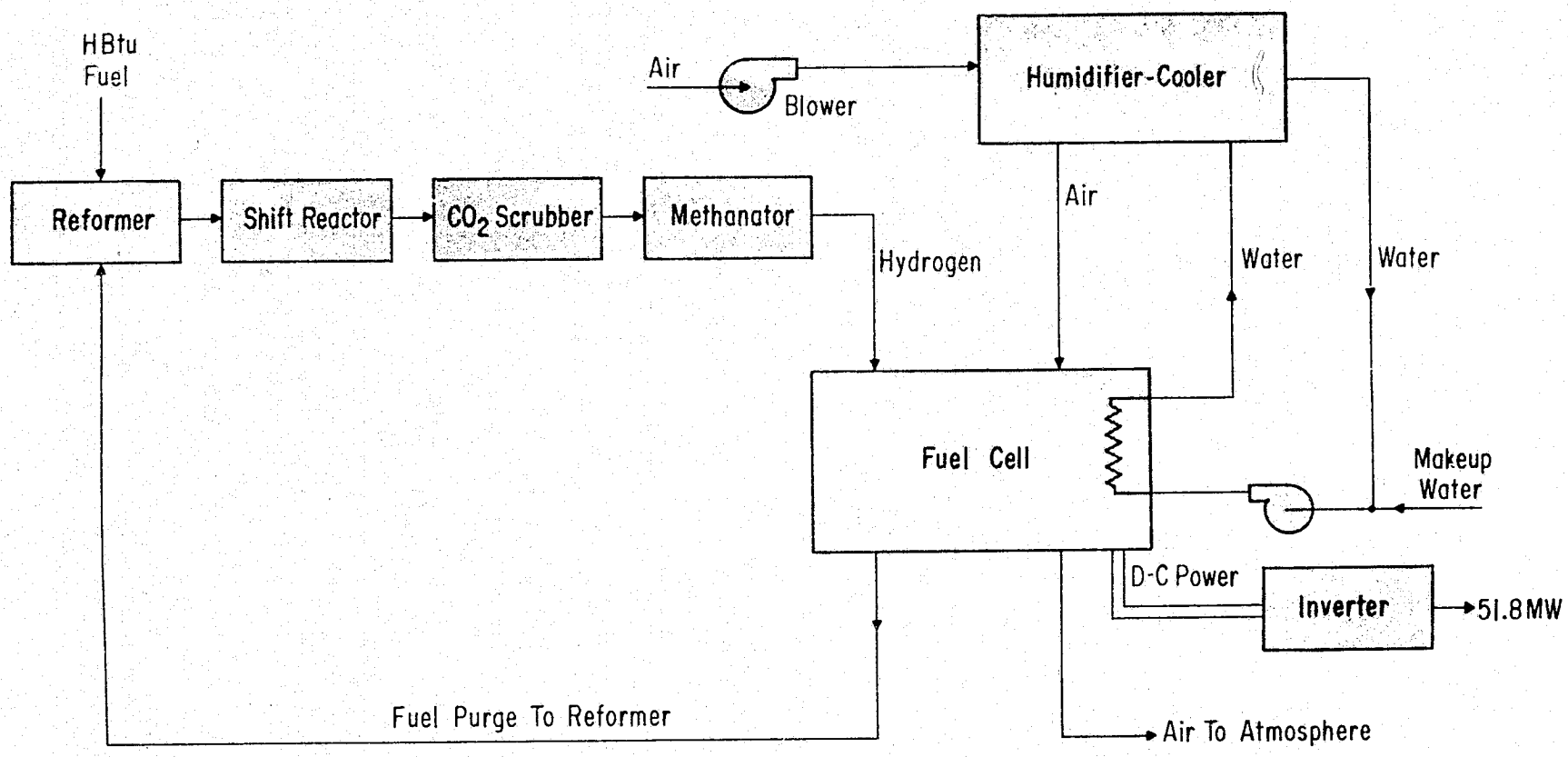

Figure 22. Fuel Cells—Low Temperature

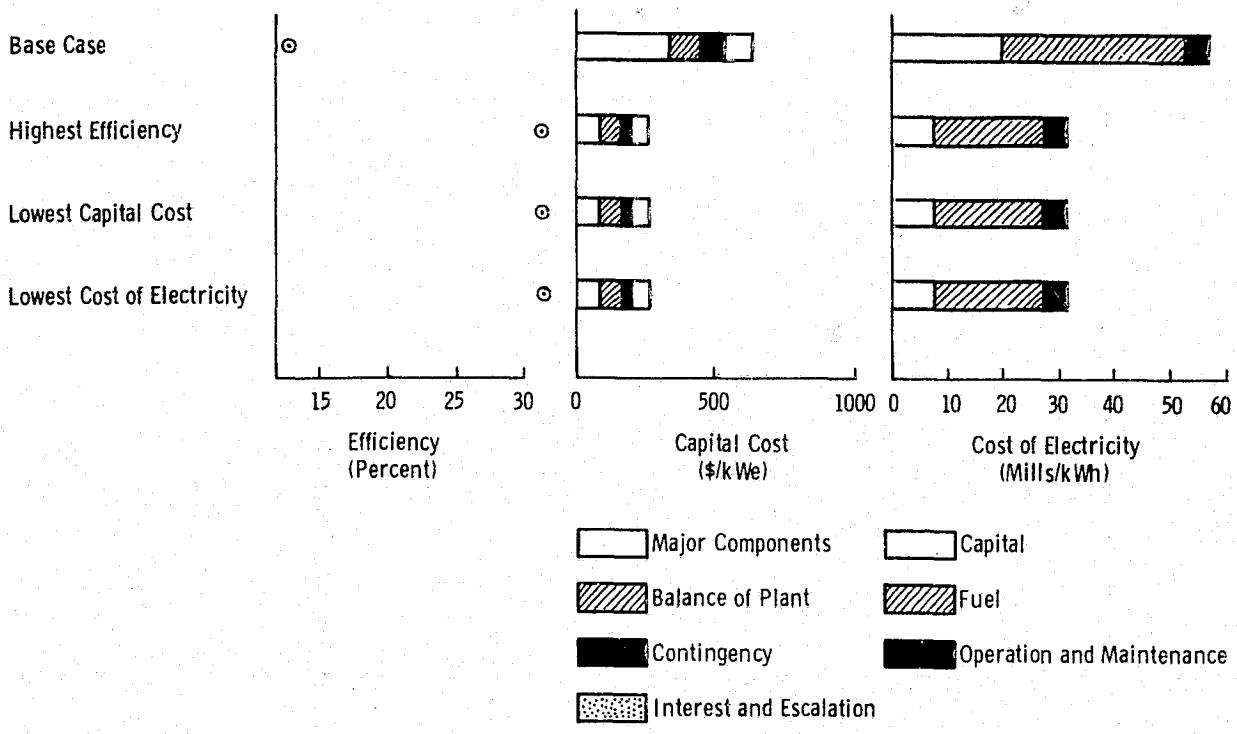

Figure 23. Fuel Cells—Low Temperature

employing high-Btu fuel and air as an oxidizer, the overall efficiencies were less than fifteen percent. When hydrogen was employed as a fuel, efficiencies in the low to mid twenties were obtained. The highest efficiency point occurred in a fuel cell employing hydrogen as a fuel and oxygen as an oxidizer. This combination also had the lowest capital cost and the lowest cost of electricity.

For the high-temperature fuel cell, the overall efficiency was in the low thirty percent range. The capital cost was in the $900 to $1000/kW range. The resulting cost of electricity was in the mid forty mills/kWh. The efficiency of the fuel cell system could perhaps be improved by integrating the fuel processing plant with the steam bottoming plant. However, the major contribution to the rather high cost of electricity was the capital charge not the fuel charge. A reduction in the capital charge would be more difficult to achieve since the features of the system require multicell units and the ducting of high-temperature gases. These combinations result in high balance-of-plant costs and long construction times, both major contributors to high capital costs.

With the low-temperature fuel cell, the employment of the hydrogen-oxygen configuration produced a cost of electricity which was competitive with the other advanced energy conversion systems in this study. However, this is obviously tied to the assumed price

of these two gases. Since the fuel charge represents 65 percent of the total cost of electricity, the cost of electricity is very sensitive to the fuel and oxidizer price. If air is employed as an oxidizer, the cost of electricity increases to the upper thirty mills/kWh range. The characteristics of the low-temperature fuel cell result in low environmental intrusion. The high fuel charge and low capital cost make this system more attractive for mid-range or peaking duty than baseload operation.

SUMMARY OF RESULTS

The objective of the Task I Study of advanced energy conversion techniques for coal or coal-derived fuels was to assist in the development of a technical-economic information base on the ten energy conversion systems under investigation. A large number of parametric variations were studied in order to select system and cycle conditions which demonstrated the potential of the conversion concept.

The major emphasis of this study was placed on the evaluation of the prime cycles. The auxiliary subsystems were selected and coupled to each cycle in ways which were aimed at showing the potential of the basic energy conversion system. A proponent of the energy conversion system analyzed the unique system features. However, in order to accomplish an objective and consistent analysis of each conversion concept, the common subsystems, e.g., furnaces, balance of plant, and bottoming cycles, were evaluated by the same study team for all energy conversion systems. This approach permitted an expression of advocacy for each system but maintained a commonality of analysis through the ten systems.

The unique approach which was followed in this study allowed comparisons to be made of the common subsystems as they were applied in the total energy conversion system. Discussions of the study results for both total systems and subsystems are presented.

ADVANCED ENERGY CONVERSION SUBSYSTEMS

Bottoming cycles were employed as a part of most of the advanced energy conversion systems. Both steam and organic working fluid cycles were evaluated. In low-temperature applications (less than 500 F [533 K]), the organic cycle permitted a larger percentage of energy recovery from the prime cycle working fluid than did the steam cycle and thus resulted in more efficient overall systems. In most cases, the inclusion of a low-temperature bottoming cycle did not produce a lower cost of electricity for the total system, in large part because the reduced fuel charge did not offset the higher capital charge which resulted for the organic cycle addition. The employment of organic bottoming cycles was limited by a maximum allowable operating temperature (∿600 F [589 K]). At temperatures greater than this limit, only steam cycles were evaluated. Use of these higher temperature steam bottoming cycles was economical since significant efficiency penalties would result

if this energy were not recovered. The fuel charge reductions therefore offset the capital charge increase.

Direct combustion of coal was the most attractive approach to introducing thermal energy into a closed-cycle working fluid. Of the three approaches studied for the direct combustion of coal—atmospheric fluidized bed, pressurized fluidized bed, and conventional radiant furnace with stack gas cleanup--the atmospheric fluidized bed generally resulted in the most attractive overall system. The pressurized fluidized bed has the potential for producing a more efficient overall system. However, the capital cost for the hot gas cleanup system and the complexity of installation resulted in high capital charges. This hot gas cleanup system also presents some significant development challenges before its success is demonstrated. Both fluidized bed concepts are adaptable to obtaining high cycle working fluid temperatures (up to 1500 F [1089 K]).

In systems which could be designed to utilize coal directly, the employment of heat input heat exchange systems designed to accept clean process fuels other than integrated low-Btu gasifiers did not appear economically attractive. In systems which require a process fuel—open-cycle gas turbines—semi-clean liquid fuel from coal was competitive with the use of gasification and therefore direct coal utilization. This was particularly true in the case of the water-cooled gas turbines since this concept is potentially not as sensitive to particulates and alkali metal contaminants in the fuel as the advanced air-cooled designs.

In the integrated low-Btu gasification of coal, a state-of-the-art fixed bed gasifier was utilized in all systems in order to establish as realistic a cost basis as possible for the fuel processing part of the plant. Improvements in the gasifier can be projected which could significantly affect the conversion systems. A higher gasifier efficiency is achievable by reducing the "feed" stream losses and integrating the gas cleanup system more efficiently. The use of lower steam-to-coal ratios in the gasifier places less energy demand on the steam bottoming cycle and thus results in greater bottoming cycle output. These advances increase the projected efficiency of the open-cycle gas turbine combined cycle with water-cooling and integrated low-Btu gasifier from a maximum projected value of 40 percent to 43 percent. Similar efficiency gains are also projected for the advanced air-cooled gas turbine combined cycle and for the closed-cycles utilizing pressurized furnaces with an integrated low-Btu fuel supply.

ADVANCED ENERGY CONVERSION SYSTEMS

When advanced systems are advocated, the characteristic most often discussed is the thermodynamic efficiency of the cycle. This is only part of the performance story, however, since each system, the more complex to a larger degree, has auxiliaries which consume significant amounts of auxiliary power. These power demands plus the thermal efficiency of the heat input system

and/or fuel processing system must be considered before a realistic efficiency value is obtained. Even after these effects are properly accounted for, the comparison is rarely done on a consistent basis. In this study, the advanced energy conversion systems are compared on the basis that each is operating on a utility system with the required support subsystems. As a means of reference, a steam power plant operating with present-day conditions (3500 psi/1000 F/1000 F [24.1 MN/m^2/811 K/811 K])—with coal combustion in a conventional radiant furnace and with stack gas cleanup and cooling towers to minimize environmental intrusion—is analyzed with the same analytical procedures used for the advanced cases.

Representative values for efficiency of the ten advanced energy conversion systems under investigation in this study are shown in Figure 24. The reference steam cycle has an efficiency of 37 percent. Most of the advanced systems have efficiencies in the same range as the reference steam plant. Only the open-cycle MHD system efficiency is significantly greater with overall efficiencies of approximately 50 percent. The advanced steam, supercritical CO_2, liquid metal topping, and inert gas MHD systems all have potential for achieving efficiencies of greater than 40 percent with the conditions examined in the Task I Study. The open-cycle gas turbine—recuperative and low-temperature fuel cell both employed clean process fuels which resulted in large decreases from power plant to overall efficiency.

The efficiency of an advanced system forms only a part of the comparison. The projected capital cost is equally important. Representative values for the capital cost projections for the ten advanced systems are shown in Figure 25 as well as reference steam power plant at approximately $700/kW. The contributions to capital costs are major components, balance of plant, contingency, and interest and escalation during construction. As noted for the reference steam power plant, complex baseloaded plants experience a significant portion of total capital cost in the non-major component categories. The major components directly account for approximately 15 percent of the total capital cost. This is true for all of the high operating temperature, advanced systems which require significant amounts of high-temperature piping and ducting, and complex, multiple component installation. For example, closed-cycle MHD systems had the highest balance-of-plant costs and, because of the long construction times, the highest interest and escalation charges. The systems with significant amounts of modular factory construction—open-cycle gas turbines and low-temperature fuel cells—had low balance-of-plant costs and short construction times. The supercritical CO_2 system, which employed a working fluid at both high pressure and high temperature in the major components as well as significant amounts of thermal transport, had the highest major component costs. Only the open-cycle gas turbines, both recuperative and combined, and the low-temperature fuel cells had capital costs significantly below the reference steam power plant.

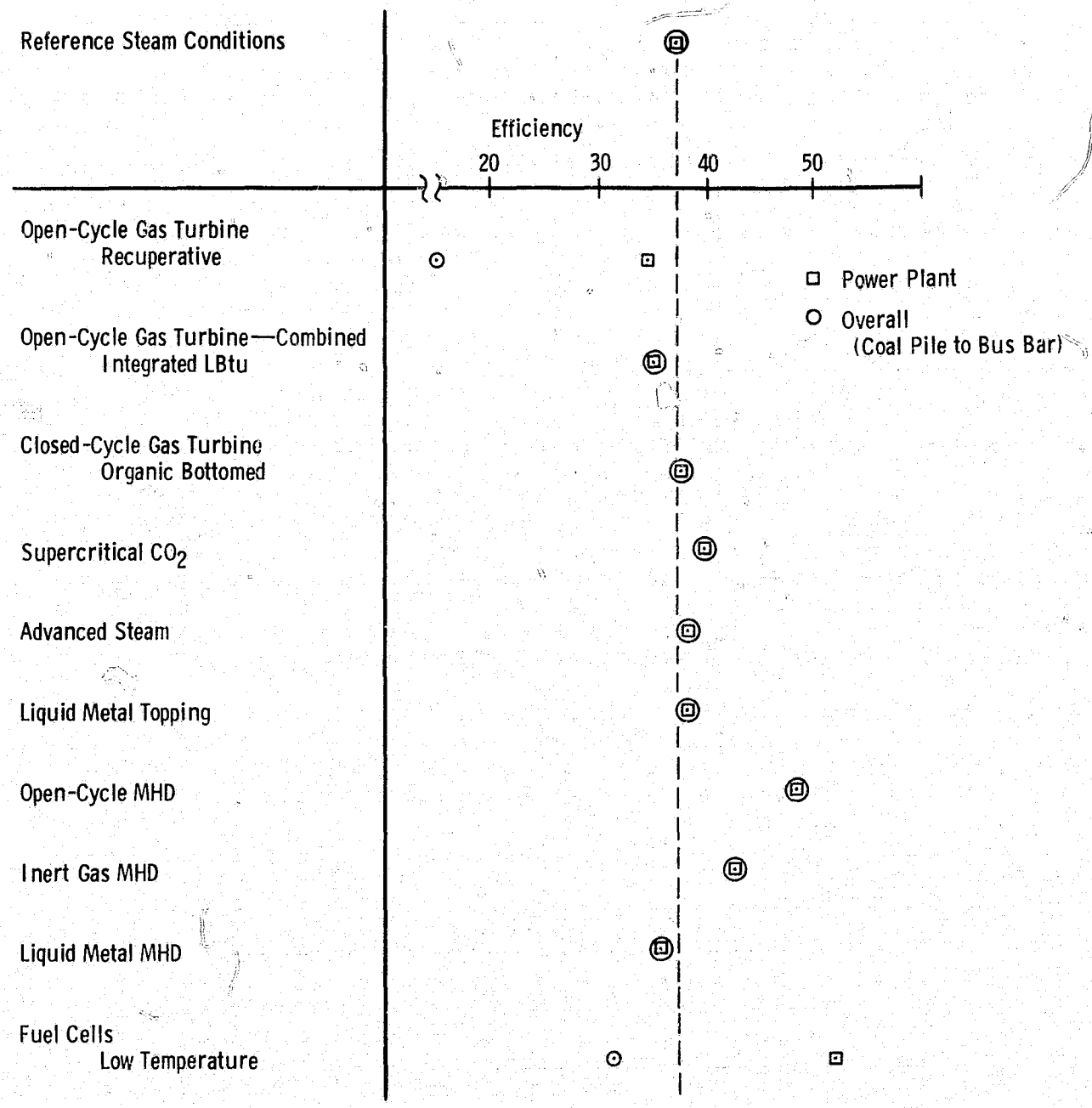

Figure 24. Summary Comparison of Cycles (Efficiency)

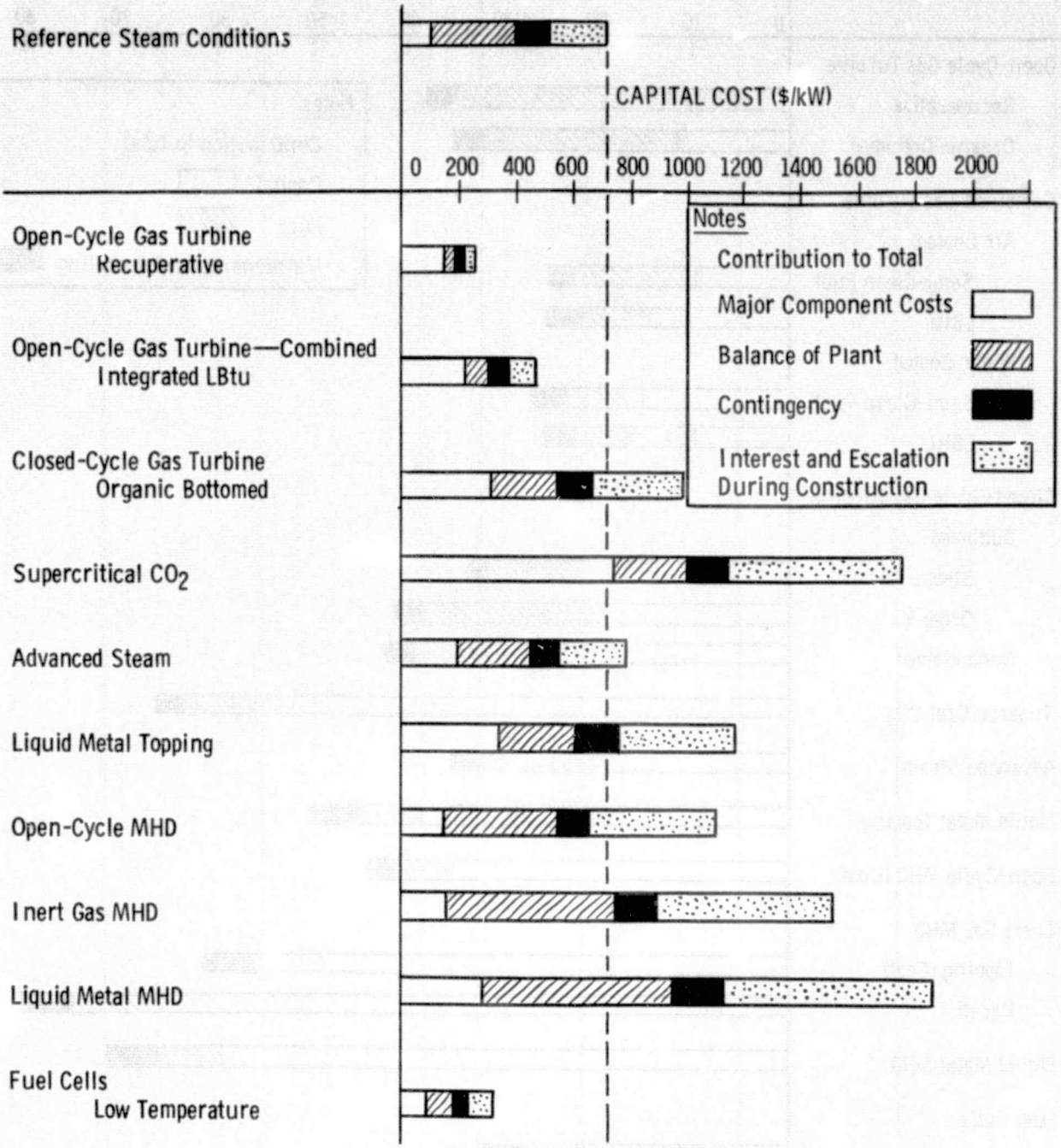

Figure 25. Summary Comparison of Cycles (Capital Cost)

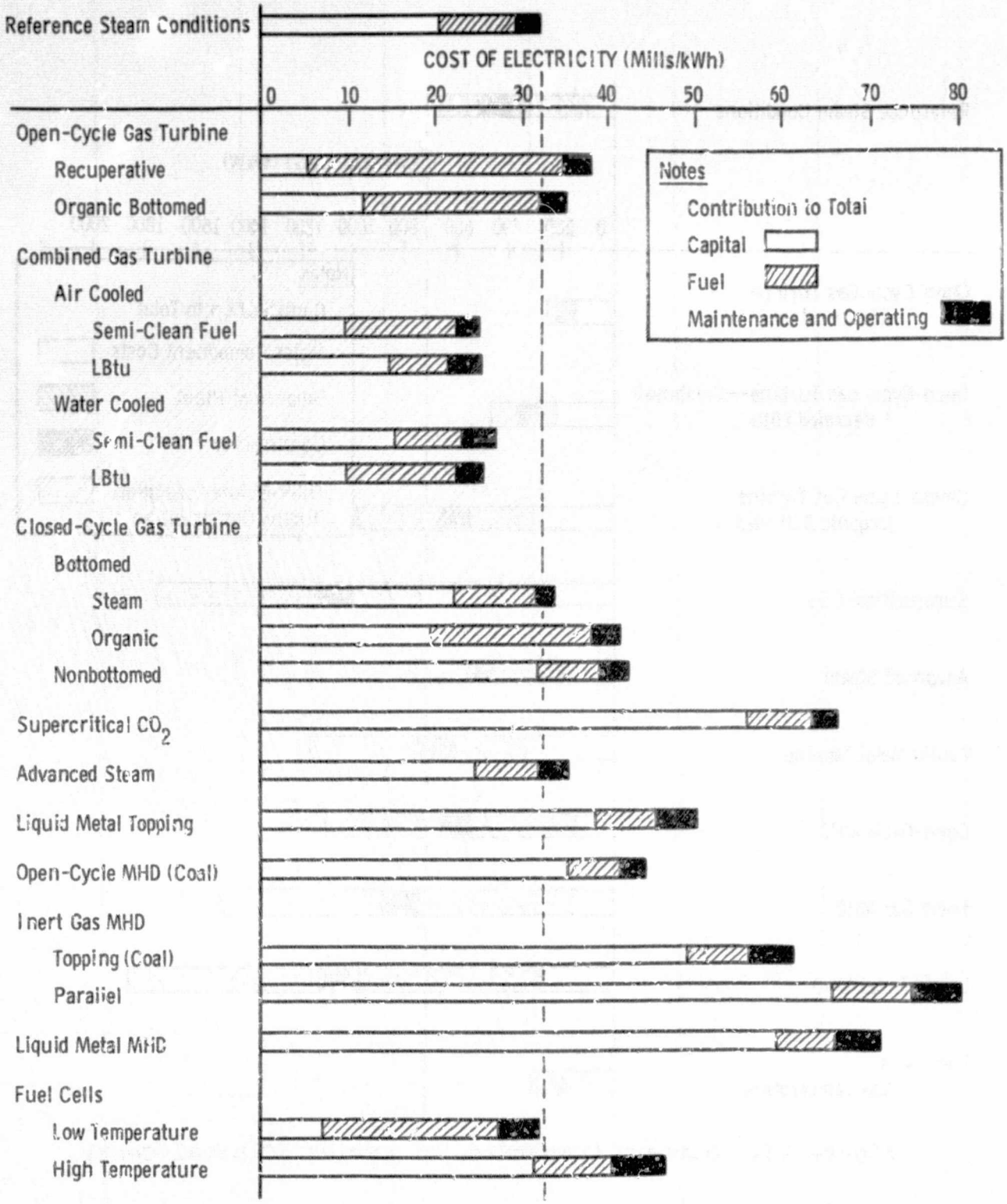

Figure 26. Summary Comparison of Cycles (Cost of Electricity at 65% Capacity Factor)

Neither the efficiency nor the capital cost alone presents an adequate basis for comparison. The combination of the two parameters into a cost of electricity provides a better comparison parameter. Representative cost-of-electricity values for the advanced energy conversion systems are shown in Figure 26. The value for the reference steam power plant at 31 mills/kWh is also shown. The cost of electricity is divided into components of: capital cost, fuel cost and operating and maintenance costs. The open-cycle gas turbine combined cycle was the only advanced energy conversion system which consistently had a cost of electricity lower than the reference steam plant. The cost of electricity for this system was in the low to mid twenties. The closed gas turbine, advanced steam, open-cycle gas turbine—recuperative and low-temperature fuel cells had a cost of electricity which was competitive with the reference plant. The low-temperature fuel cells and open-cycle gas turbine—recuperative both had very high fuel charges and low capital charges. This was due to their dependence on high-cost clean fuels. This characteristic is most attractive for power plants operating designed to operate at peaking duty. Plants designed for baseload duty are generally characterized by efficient operation on less expensive fuels, resulting in low fuel charge. This is true for a majority of the advanced systems, the capital charges generally being 60 to 90% of the total cost of electricity.

High capital charges make the total cost of electricity relatively insensitive to the fuel charge and therefore to operating efficiency. When capital cost is evaluated in combination with thermodynamic performance, a severe constraint is placed on the amount of initial capital investment that can be justified in order to achieve an increase in efficiency.

☆ U.S. GOVERNMENT PRINTING OFFICE: 1976-660-286/48 Region No. 5-11