General Disclaimer

One or more of the Following Statements may affect this Document

- This document has been reproduced from the best copy furnished by the organizational source. It is being released in the interest of making available as much information as possible.

- This document may contain data, which exceeds the sheet parameters. It was furnished in this condition by the organizational source and is the best copy available.

- This document may contain tone-on-tone or color graphs, charts and/or pictures, which have been reproduced in black and white.

- This document is paginated as submitted by the original source.

- Portions of this document are not fully legible due to the historical nature of some of the material. However, it is the best reproduction available from the original submission.

Produced by the NASA Center for Aerospace Information (CASI)

NGR-47-004-129

(NASA-CR-148318) OPTIMUM DESIGN OF COMPOSITE LAMINATES WITH THERMAL EFFECTS M.S. Thesis (Virginia Polytechnic Inst. and State Univ.) 110 p HC $5.50 CSCL 11D

N76-27360

Unclas

G3/24 41857

COLLEGE OF ENGINEERING

VIRGINIA POLYTECHNIC INSTITUTE AND STATE UNIVERSITY

BLACKSBURG, VIRGINIA

JUL 1976
RECEIVED
NASA STI FACILITY
INPUT BRANCH

College of Engineering
Virginia Polytechnic Institute and State University
Blacksburg, Virginia 24061

VPI-E-76-11 June, 1976

Optimum Design of Composite Laminates with Thermal Effects

Larry R. Markham
Carl T. Herakovich

Department of Engineering Science and Mechanics

This work constituted Mr. Markham's thesis
for his Master of Science Degree in
Civil Engineering

Supported by NASA Grant NGR 47-004-129

BIBLIOGRAPHIC DATA SHEET	1. Report No. VPI-E-76-11	2.	3. Recipient's Accession No.
4. Title and Subtitle OPTIMUM DESIGN OF COMPOSITE LAMINATES WITH THERMAL EFFECTS			5. Report Date June, 1976 6.
7. Author(s) Larry R. Markham, Carl T. Herakovich			8. Performing Organization Rept. No. VPI-E-76-11
9. Performing Organization Name and Address Virginia Polytechnic Institute and State University Engineering Science and Mechanics Blacksburg, Virginia 24061			10. Project/Task/Work Unit No. 11. Contract/Grant No. NGR 47-004-129
12. Sponsoring Organization Name and Address National Aeronautics & Space Administration Langley Research Center Hampton, Virginia 23665			13. Type of Report & Period Covered 14.

15. Supplementary Notes

16. Abstracts

see page i

17. Key Words and Document Analysis. 17a. Descriptors

composites, optimum design, thermal stresses, strain energy, stiffness, strength, thermal expansion

17b. Identifiers/Open-Ended Terms

17c. COSATI Field/Group

18. Availability Statement	19. Security Class (This Report)	21. No. of Pages
Distribution unlimited	UNCLASSIFIED	110
	20. Security Class (This Page) UNCLASSIFIED	22. Price

ABSTRACT

An analytical approach to determine an optimum laminate for a variety of thermal and mechanical loading combinations is presented. The analysis is performed for a linear elastic material under static mechanical and uniform thermal loadings.

The problem is restricted to a unit width and length laminate with angle orientations resulting in an orthotropic, symmetric and balanced configuration. This allows for the elimination of bending-extention coupling effects, furthermore only in-plane loads and uniform temperature change through the thickness are considered. Thus the problem is reduced to that of a plane stress state.

The optimization is performed by a general purpose program, AESOP (Automated Engineering and Scientific Optimization Program) developed for NASA by the Boeing Co. An objective function defining total strain energy, is formulated and an optimum laminate design determined subject to constraints on stiffness, average coefficient of thermal expansion, and strength. The objective function is formulated in terms of the orientation angles, number of plies and material properties.

The method presented has, in varying degrees, shown that the design of a laminate can be accomplished using strain energy minimization as the primary criteria. It is felt that by minimizing strain energy, reserve strength is maximized. The inclusion of a failure criteria may result in a non-feasible solution based on the purpose of a failure criteria to maximize stress, within failure bounds. The results of various combinations of applied constraints in the optimized design process are presented and discussed.

ACKNOWLEDGEMENT

This work was supported by NASA's Langley Research Center under NASA Grant NGR 47-004-129. Dr. John G. Davis, Jr. was the technical monitor and his assistance is gratefully acknowledged. The authors also wish to thank Mrs. Frances Carter for her splendid effort in typing this manuscript.

TABLE OF CONTENTS

Page

ABSTRACT i

ACKNOWLEDGEMENT ii

TABLE OF CONTENTS iii

LIST OF SYMBOLS vi

LIST OF TABLES ix

LIST OF FIGURES xi

I. INTRODUCTION 1

1.1 General 1

1.2 Objectives 2

2. LITERATURE REVIEW 3

3. THEORETICAL FORMULATION 6

3.1 Laminate Analysis 6

3.2 Thermal Analysis 15

3.3 Laminate Engineering Constants 23

3.4 Failure Criteria 25

3.5 Strain Energy 26

4. OPTIMIZATION FORMULATION 29

4.1 General 29

4.2 Mathematical Formulation 30

5. RESULTS AND DISCUSSIONS 32

5.1 Designs with Material Properties Constrained..... 35

5.1.1 Designed by Perturbing Ply Angles for a Set Number of Plies 37

Page

5.1.1.1 Composite Laminate Tailored to Match the Properties of a $[0,\pm45,0]_s$ Laminate 38

5.1.1.2 Composite Laminate Tailored to Match the Properties of Titanium 40

5.1.1.3 Composite Laminate Tailored to Match the Properties of Aluminum 43

5.2 Designs with Material Properties and Ply Failures Constrained 43

5.2.1 Designed by Perturbing Ply Angles for a Set Number of Plies 47

5.2.1.1 Composite Laminate Tailored to Match the Properties of a $[0,\pm45,0]_s$ Laminate 47

5.2.1.2 Composite Laminate Tailored to Match the Properties of Titanium 49

5.2.1.3 Composite Laminate Tailored to Match the Properties of Aluminum 51

5.2.2 Designed by Perturbing the Number of Plies for a Set Ply Angle 51

5.2.2.1 Composite Laminate Tailored to Match the Properties of a $[0,\pm45,0]_s$ Laminate 53

5.2.2.2 Composite Laminate Tailored to Match the Properties of Titanium 55

5.2.2.3 Composite Laminate Tailored to Match the Properties of Aluminum 55

Page

6. SUMMARY AND CONCLUSIONS 59

BIBLIOGRAPHY 63

APPENDICES 67

A.1 LAMAES User's Guide 67

A.2 LAMAES Examples 80

A.3 LAMAES Listing 94

LIST OF SYMBOLS

[A]	laminate extensional stiffness matrix
[B]	laminate coupling stiffness matrix
c	cosine of an angle
[D]	laminate bending stiffness matrix
E	modulus of elasticity
G	shear modulus
H	half laminate thickness
{M}	resultant moment vector
{N}	resultant force vector
n	number of plies
[Q]	lamina stiffness matrix
$[\bar{Q}]$	transformed lamina stiffness matrix
[R]	Reuter strain transformation matrix
[S]	lamina compliance matrix
s	sine of an angle
[T]	coordinate transformation matrix
ΔT	temperature change
$\bar{\Delta T}$	temperature change from cure to operating
W	constraint error weighting factor
U	strain energy
$\bar{U}$	strain energy density
V	volume
X	ultimate lamina normal stress, 1-direction
Y	ultimate lamina normal stress, 2-direction

Z	ultimate lamina shear stress, 1,2-direction
z	distance from laminate midplane to lamina midplane
$\{\alpha\}$	lamina coefficient of thermal expansion vector
$\{\bar{\alpha}\}$	laminate coefficient of thermal expansion vector
β	design variable
γ	shear strain
$\{\varepsilon\}$	strain vector
$\{\eta\}$	laminate coefficients of mutual influence
θ	angle measured from laminate x-axis to lamina 1-axis
$\{\kappa\}$	laminate midplane curvature vector
ν	Poisson's ratio
$\{\sigma\}$	stress vector
$\{\bar{\sigma}\}$	average stress vector
τ	shear stress
$\bar{\tau}$	average shear stress
Φ	objective function to be optimized
Ψ	constraint function
Ω	desired constraint value

<u>Superscripts</u>

o	laminate midplane value
-1	matrix inverse
1	temperature change from ambient to maximum
2	temperature change from maximum to cure
3	temperature change from cure to ambient
4	temperature change from ambient to operating

E	operating thermal effect
H	minimum value
L	maximum value
M	mechanical loading effect
R	residual thermal effect
T	matrix transpose
-T	matrix transpose inverse
$\bar{T}$	total thermal effect

<u>Subscripts</u>

(1,2)	lamina coordinate system
(1,2,6)	matrix element numbers
C	compression
k	k^{th} ply
m	number of design variables
p	number of constraints
T	tension
(x,y)	laminate coordinate system

LIST OF TABLES

Table Page

1. Material Properties 33
2. Mechanical and Thermal Loadings 34
3. Unconstrained Strain Energy Results 36
4. Composite Laminate - $[0,\pm45,0]_s$ Results for Ply Angles Perturbed with Material Properties Constrained 39
5. Composite Laminate - Titanium Results for Ply Angles Perturbed with Material Properties Constrained 41
6. Composite Laminate - Aluminum Results for Ply Angles Perturbed with Material Properties Constrained 44
7. Composite Laminate Results for Ply Angles or Number of Plies Perturbed with Ply Failures Constrained 46
8. Composite Laminate - $[0,\pm45,0]_s$ Results for Ply Angles Perturbed with Material Properties and Ply Failures Constrained 48
9. Composite Laminate - Titanium Results for Ply Angles Perturbed with Material Properties and Ply Failures Constrained 50
10. Composite Laminate - Aluminum Results for Ply Angles Perturbed with Material Properties and Ply Failures Constrained 52
11. Composite Laminates - $[0,\pm45,0]_s$ Results for Number of Plies Perturbed with Material Properties and Ply Failures Constrained 54

Table | Page

12. Composite Laminate - Titanium Results for Number of Plies Perturbed with Material Properties and Ply Failures Constrained 56

13. Composite Laminate - Aluminum Results for Number of Plies Perturbed with Material Properties and Ply Failures Constrained 57

LIST OF FIGURES

Figure		Page
1.	Lamina Coordinate System	7
2.	Forces and Moments on a Flat Laminate	13
3.	N-Layered Laminate Geometry	14
4.	Lamina Temperature History	19
5.	Lamina Thermal Mismatch	20
6.	Element in Uniaxial Tension	27
A1.	LAMAES Flowchart	79

Chapter 1

INTRODUCTION

1.1 GENERAL

The goal of structural engineering is, for the most part, to arrive at a design which is the most economical and at the same time satisfies all load and deflection requirements. This goal is best met by implementing some optimization technique to aid in the design process. The use of optimization is a relatively recent development in the design of structures and has not yet enjoyed the intensive study needed to yield the potentially powerful tool it promises to be. Design, at present, usually amounts to a series of analysis procedures, or iterations, until a suitable solution is found, however with the advent of modern high speed digital computers the use of an optimization technique to solve the same problem can yield a superior design, and a savings in computational effort.

Laminated composite materials, being composed of many plies at various angles of orientation, readily allow the direct application of optimization techniques to arrive at an optimum design. Previous investigations have dealt with this problem on the basis of a minimum weight design with various constraints applied. Many of these efforts have been of the "try them all" approach.

The "try them all" approach amounts to the systematic perturbing of angular orientations by a set increment until all possible configurations have been analyzed. This is fine for a very small number of plies in the laminate but the total computational time involved for

a large number of plies is prohibitive. This leads to the use of non linear programming techniques to arrive at an optimum design.

Little attention has been paid to the effects of thermal loading on the design, or the need for tailoring laminates for certain thermal expansion characteristics. This type of problem is becoming critical as higher temperatures environments and extreme temperature ranges are encountered, especially in spacecraft and hypersonic flight.

1.2 OBJECTIVES

The primary objective of this report is to develop a computer code which can be used to find an optimum composite laminate design, given the mechanical and temperature loadings. In addition, the capability to use the code purely for analysis is provided.

The design is found by perturbing the design variables until the objective function, consisting of total strain energy, is minimized subject to constraints on stiffness, coefficients of thermal expansion and failure criteria. The use of the total strain energy of the laminate as the objective function to be minimized is thought to be a means of maximizing the total reserve strength the laminate has available.

Chapter 2

LITERATURE REVIEW

A number of schemes for optimum laminate design have been formulated during the early years of composite material technology development. The earliest of these deals with fiberglass laminate design by Hackman and Stotler [1]. This procedure uses the number of plies, individual ply material type and ply orientation as the design variables. A combined load envelope is developed and adjusted to reflect fatigue and environmental factors. The design is then found, by means of a polar loading diagram, through a series of material and ply orientation selections. This type of design method lacks the ability to consider ply interaction.

The computer program RC7 written by General Dynamics [2] determines an optimum laminate by means of a series of ply additions and reorientations. RC7 has the capability to handle 20 plies, contains two strength criteria, Tsai-Hill and maximum strain but stiffness is not considered. The ply angles are allowed to vary from 0 to 180 degrees in increments of 5 degrees. This procedure would seem to be very good for their laminates but the large number of reorientations involved tend to negate the value for a large number of plies.

Approaching the problem by a different method, Foye and Baker [3] use a random search technique as opposed to the exhaustive, systematic search. Initially this procedure determines the number of plies by a random search method then in the second step uses non-linear programming techniques to find the optimum orientations.

An analytical approach is taken by Bush [4] to the optimization problem. This procedure uses a unique simultaneous equation solution approach formulated on the basis of the load-stress and stress-strain relations. The design variables include total thickness and ± angles. The design is constrained to be orthotropic about the principle load directions.

Another type of laminate design optimization procedure has employed families of plies. Two such programs, OPLAM by Grumman Aerospace [5] and OPTLAM by Douglas Aircraft [6], follow a procedure similar to RC7 using [0/±45/90] orthotropic laminate. Basically, these two procedures go through a series of ply reorientations, restricted to the previously mentioned angles, and ply deletions until a minimum ply solution is obtained.

The method found in the Advanced Composites Design Guide [7] is a more general constrained minimization program. This procedure uses the method of centered circles to arrive at a constrained optimum solution.

Schmit and Farshi [8] present a method for optimum laminate design using a series of linear programs to approximate the nonlinear programming formulation. The solution implements the method of inscribed hyperspheres to obtain the optimum laminate. This procedure considers multiple in-plane loads, strength and stiffness.

All of the methods reviewed above involve laminate design. The next logical step is the assemblage of these laminates into structural

elements. In references [9-28] these types of applications are discussed in great detail. The general structural element application usually involves finite element analysis in conjunction with a laminate analysis program. A further step in this direction involves the design of complex structural elements, such as complete wings. The details of these applications are discussed in references [29-31] which are beyond the scope of this investigation.

The methods presented in the detailed review, include, systematic search techniques, random search techniques, analytical approachs and more sophisticated non-linear programming methods. Many of these methods tend to be computationally exhaustive for a large number of plies, and as a result this investigation shall deal with the usage of a series of non linear programming techniques as a means of obtaining an optimum solution.

All of the methods reviewed used weight as the function to be minimized with various combinations of constraints, either strength or stiffness generally employed but coefficients of thermal expansion were neglected for the most part.

The current investigation shall be restricted to laminate designs with thermal effects included. Total strain energy shall be employed as the function to be minimized, subject to stiffness, strength, and coefficient of thermal expansion constraints.

Chapter 3

THEORETICAL FORMULATION

3.1 LAMINATE ANALYSIS

The laminate analysis is based on a single, integral structural element made up of two or more laminae bonded together. The individual lamina properties govern the response of the laminate. Logically the lamina is the initial step in formulating the laminate analysis.

The lamina is assumed to be a homogenous orthotropic material in a plane stress state. Orthotropic materials have three planes of material property symmetry (Fig. 1a). The general constitutive equations for a lamina in its natural coordinate system (Fig. 1b) may be expressed as:

$$\begin{Bmatrix} \varepsilon_1 \\ \varepsilon_2 \\ \gamma_{12} \end{Bmatrix} = \begin{bmatrix} S_{11} & S_{12} & S_{16} \\ S_{12} & S_{22} & S_{26} \\ S_{16} & S_{26} & S_{66} \end{bmatrix} \begin{Bmatrix} \sigma_1 \\ \sigma_2 \\ \tau_{12} \end{Bmatrix} \tag{3.1}$$

Where, the components of the compliance matrix, S, are:

$$\begin{aligned} S_{11} &= \frac{1}{E_1} \\ S_{12} &= -\frac{\nu_{12}}{E_1} = -\frac{\nu_{21}}{E_2} \\ S_{22} &= \frac{1}{E_2} \\ S_{66} &= \frac{1}{G_{12}} \\ S_{16} &= S_{26} = 0 \end{aligned} \tag{3.2}$$

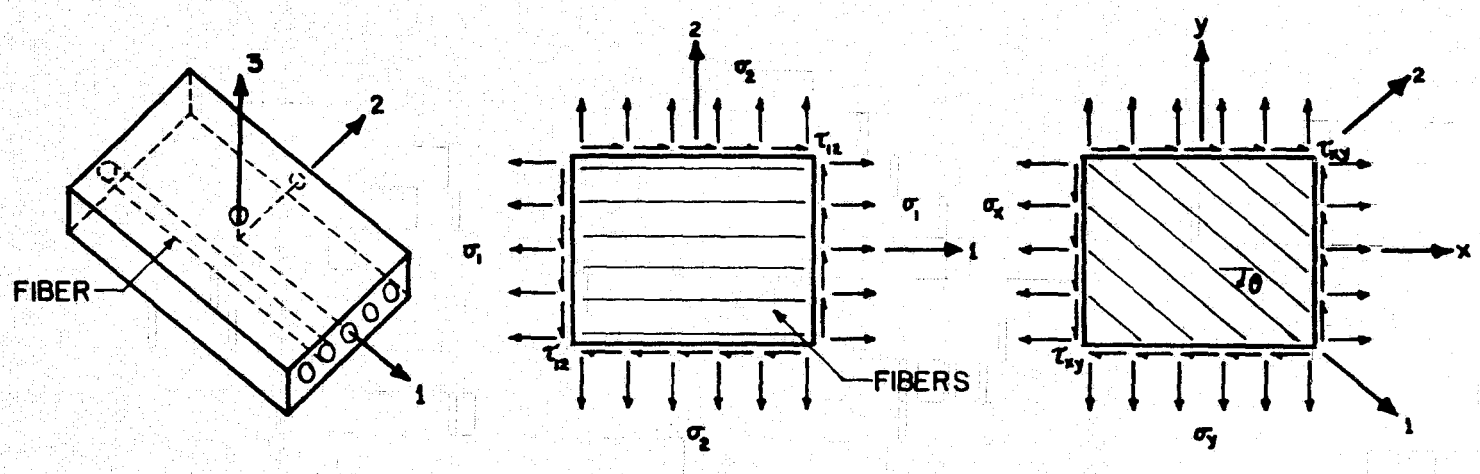

(a) ORTHOGONAL LAMINA

(b) NATURAL LAMINA COORDINATE SYSTEM

(c) TRANSFORMED LAMINA COORDINATE SYSTEM

FIGURE I. LAMINA COORDINATE SYSTEMS

The strain-stress relations of (3.1) can by matrix inversion, yield the stress-strain relations:

$$\begin{Bmatrix} \sigma_1 \\ \sigma_2 \\ \tau_{12} \end{Bmatrix} = \begin{bmatrix} Q_{11} & Q_{12} & Q_{16} \\ Q_{12} & Q_{22} & Q_{26} \\ Q_{16} & Q_{26} & Q_{66} \end{bmatrix} \begin{Bmatrix} \varepsilon_1 \\ \varepsilon_2 \\ \gamma_{12} \end{Bmatrix} \tag{3.3}$$

where, the components of the stiffness matrix, Q, are:

$$Q_{11} = \frac{S_{22}}{S_{11}S_{22}-S_{12}^2} = \frac{E_1}{1-\nu_{12}\nu_{21}}$$

$$Q_{12} = \frac{S_{12}}{S_{11}S_{22}-S_{12}^2} = \frac{\nu_{12}E_2}{1-\nu_{12}\nu_{21}} = \frac{\nu_{21}E_1}{1-\nu_{12}\nu_{21}}$$

$$Q_{22} = \frac{S_{11}}{S_{11}S_{22}-S_{12}^2} = \frac{E_2}{1-\nu_{12}\nu_{21}} \tag{3.4}$$

$$Q_{66} = \frac{1}{S_{66}} = G_{12}$$

$$Q_{16} = Q_{26} = 0$$

The stresses and strains must now be expressed in terms of an arbitrary coordinate system (Fig. 1c) rotated by an angle theta from the x-axis to the 1-axis. These stresses and strains can be expressed in the following form,

$$\begin{Bmatrix} \sigma_x \\ \sigma_y \\ \tau_{xy} \end{Bmatrix} = [T]^{-1} \begin{Bmatrix} \sigma_1 \\ \sigma_2 \\ \tau_{12} \end{Bmatrix} \tag{3.5}$$

and

$$\begin{Bmatrix} \varepsilon_x \\ \varepsilon_y \\ \frac{\gamma_{xy}}{2} \end{Bmatrix} = [T]^{-1} \begin{Bmatrix} \varepsilon_1 \\ \varepsilon_2 \\ \frac{\gamma_{12}}{2} \end{Bmatrix} \tag{3.6}$$

where the coordinate transformation matrix, T, is

$$[T] = \begin{bmatrix} c^2 & s^2 & 2sc \\ s^2 & c^2 & -2sc \\ -sc & sc & c^2-s^2 \end{bmatrix} \tag{3.7}$$

and the superscript -1 denotes the matrix inverse,

$$[T]^{-1} = \begin{bmatrix} c^2 & s^2 & -2sc \\ s^2 & c^2 & 2sc \\ sc & -sc & c^2-s^2 \end{bmatrix} \tag{3.8}$$

where

c = cosine Θ

s = sine Θ

In (3.6) it is noted that strains transform via the same transformation if the tensor definition of shear strain is used (engineering shear strain divided by two). However, if the matrix

$$[R] = \begin{bmatrix} 1 & 0 & 0 \\ 0 & 1 & 0 \\ 0 & 0 & 2 \end{bmatrix} \tag{3.9}$$

due to Reuter [32] is implemented, the strain vectors become,

$$\begin{Bmatrix} \varepsilon_1 \\ \varepsilon_2 \\ \gamma_{12} \end{Bmatrix} = [R] \begin{Bmatrix} \varepsilon_1 \\ \varepsilon_2 \\ \frac{\gamma_{12}}{2} \end{Bmatrix} \tag{3.10}$$

and

$$\begin{Bmatrix} \varepsilon_x \\ \varepsilon_y \\ \gamma_{xy} \end{Bmatrix} = [R] \begin{Bmatrix} \varepsilon_x \\ \varepsilon_y \\ \frac{\gamma_{xy}}{2} \end{Bmatrix} \tag{3.11}$$

Thus, in order to obtain the stress-strain relations in the x,y coordinate system in terms of the material properties and the laminae orientations equations (3.3), (3.5), (3.10), (3.6) and (3.11) are combined to yield,

$$\begin{Bmatrix} \sigma_x \\ \sigma_y \\ \tau_{xy} \end{Bmatrix} = [T]^{-1} \begin{Bmatrix} \sigma_1 \\ \sigma_2 \\ \tau_{12} \end{Bmatrix} = [T]^{-1}[Q][R][T][R]^{-1} \begin{Bmatrix} \varepsilon_x \\ \varepsilon_y \\ \gamma_{xy} \end{Bmatrix} \tag{3.12}$$

however $[R][T][R]^{-1} = [T]^{-T}$ where superscript T denotes matrix transpose, thus abbreviating

$$[\bar{Q}] = [T]^{-1}[Q][T]^{-T} \tag{3.13}$$

and in simplified form (3.12) becomes,

$$\begin{Bmatrix} \sigma_x \\ \sigma_y \\ \tau_{xy} \end{Bmatrix} = [\bar{Q}] \begin{Bmatrix} \varepsilon_x \\ \varepsilon_y \\ \gamma_{xy} \end{Bmatrix} \tag{3.14}$$

The derivation for the strains follows a similar path and can be found in more detail in [33] Jones.

The previously expressed relationships are valid for any lamina of a laminate. Thus the stresses for the kth ply are,

$$\{\sigma_x\}_k = [\bar{Q}]_k \{\varepsilon_x\}_k \tag{3.15}$$

In order to derive the stress strain relationships for the laminate the Kirchhoff hypothesis for plates must be introduced to account for the variation of strain through the thickness. This representation of strain for the kth ply in terms of the mid-plane strain and curvature may be written as

$$\begin{Bmatrix} \varepsilon_x \\ \varepsilon_y \\ \gamma_{xy} \end{Bmatrix} = \begin{Bmatrix} \varepsilon_x^o \\ \varepsilon_y^o \\ \gamma_{xy}^o \end{Bmatrix} + z \begin{Bmatrix} \kappa_x \\ \kappa_y \\ \kappa_{xy} \end{Bmatrix} \tag{3.16}$$

where z is the distance from the laminate midplane to the lamina midplane and the stresses in the kth ply as,

$$\begin{Bmatrix} \sigma_x \\ \sigma_y \\ \tau_{xy} \end{Bmatrix}_k = [\bar{Q}]_k \left\{ \begin{Bmatrix} \varepsilon_x^o \\ \varepsilon_y^o \\ \gamma_{xy}^o \end{Bmatrix} + z \begin{Bmatrix} \kappa_x \\ \kappa_y \\ \kappa_{xy} \end{Bmatrix} \right\} \tag{3.17}$$

The strains vary linearly through the thickness but due to possible variation of the $\bar{Q}$ matrix from ply to ply the stress variation will, in general, be nonlinear.

The resultant laminate forces (force per unit length) and moments (moment per unit length) (Fig. 2) are obtained by integrating the stresses of each ply through the thickness (Fig. 3) as follows,

$$\{N\} = \int_{-H}^{H} \{\sigma_x\}_k \, dz = \sum_{k=1}^{n} \int_{z_{k-1}}^{z_k} \{\sigma_x\}_k \, dz$$
$$\{M\} = \int_{-H}^{H} \{\sigma_x\}_k \, z dz = \sum_{k=1}^{n} \int_{z_{k-1}}^{z_k} \{\sigma_x\}_k \, z dz \tag{3.18}$$

Substituting (3.17) in (3.18) yields,

$$\{N\} = \sum_{k=1}^{n} [\bar{Q}]_k \left\{ \int_{z_{k-1}}^{z_k} \{\varepsilon^o\} dz + \int_{z_{k-1}}^{z_k} \{\kappa\} z dz \right\}$$
$$\{M\} = \sum_{k=1}^{n} [\bar{Q}]_k \left\{ \int_{z_{k-1}}^{z_k} \{\varepsilon^o\} z dz + \int_{z_{k-1}}^{z_k} \{\kappa\} z^2 dz \right\} \tag{3.19}$$

Simplifying (3.19) yields,

$$\{N\} = [A]\{\varepsilon^o\} + [B]\{\kappa\}$$
$$\{M\} = [B]\{\varepsilon^o\} + [D]\{\kappa\} \tag{3.20}$$

where

$$A_{ij} = \sum_{k=1}^{n} (\bar{Q}_{ij})_k (z_k - z_{k-1})$$

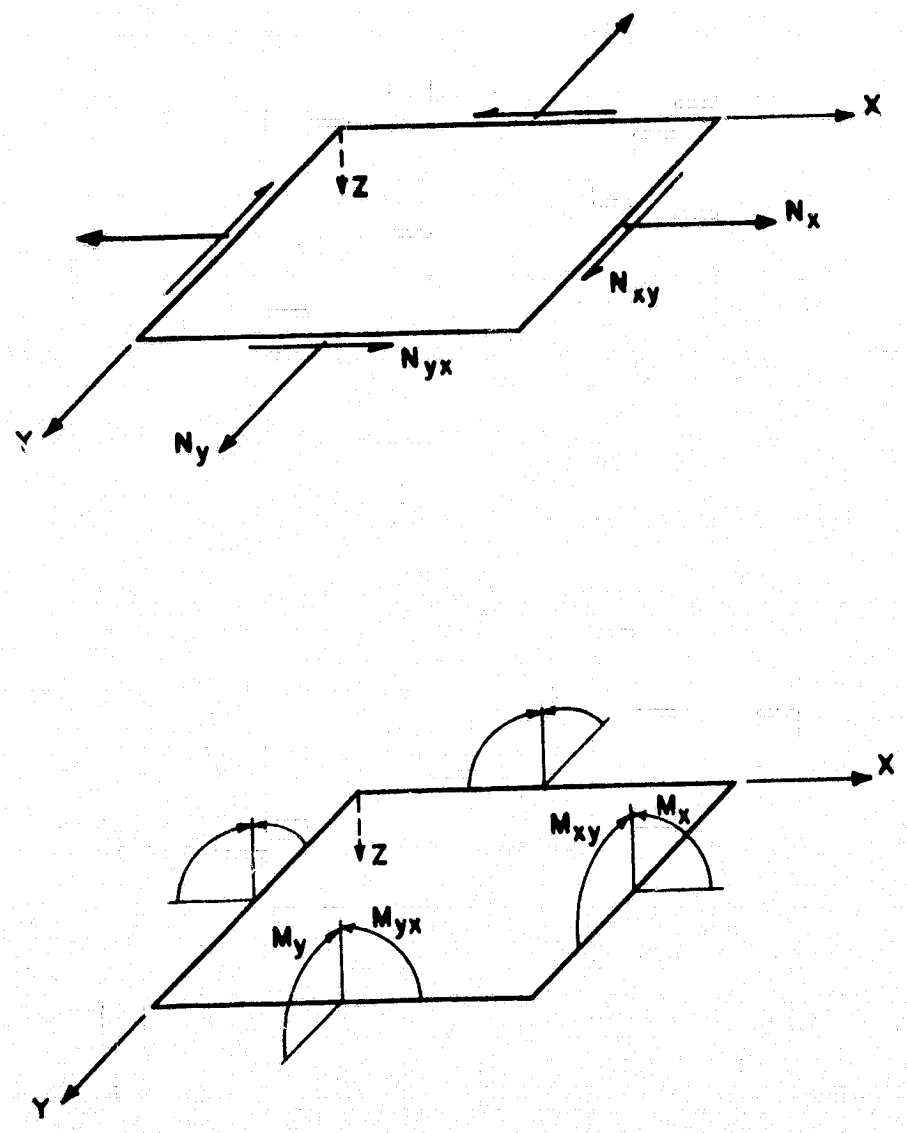

FIGURE 2. FORCES AND MOMENTS ON A FLAT LAMINATE

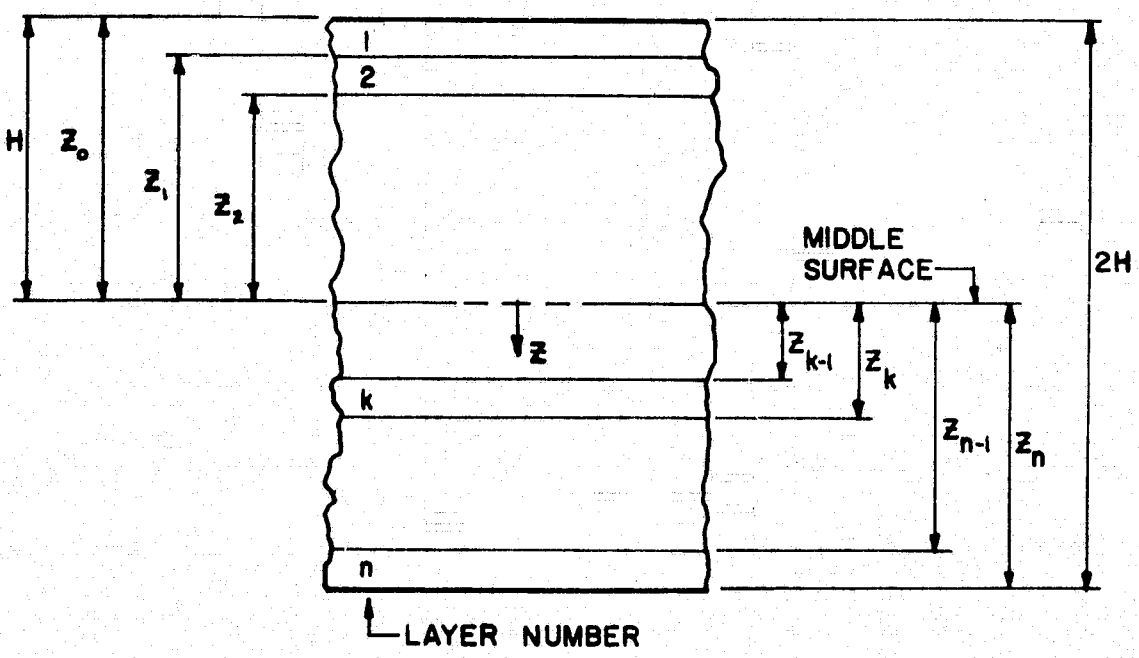

FIGURE 3. n-LAYERED LAMINATE GEOMETRY

$$B_{ij} = \frac{1}{2} \sum_{k=1}^{n} (\bar{Q}_{ij})_k (z_k^2 - z_{k-1}^2) \tag{3.21}$$

$$D_{ij} = \frac{1}{3} \sum_{k=1}^{n} (\bar{Q}_{ij})_k (z_k^3 - z_{k-1}^3) \text{ for } i, j = 1,2,6$$

Rewriting (3.20) in combined form results in

$$\left\{ \begin{array}{c} N \\ \hline M \end{array} \right\} = \left[\begin{array}{c|c} A & B \\ \hline B & D \end{array} \right] \left\{ \begin{array}{c} \varepsilon^o \\ \hline \kappa \end{array} \right\}$$

or in inverted form (3.22)

$$\left\{ \begin{array}{c} \varepsilon^o \\ \hline \kappa \end{array} \right\} = \left[\begin{array}{c|c} A^{-1} & B^{-1} \\ \hline B^{-1} & D^{-1} \end{array} \right] \left\{ \begin{array}{c} N \\ \hline M \end{array} \right\}$$

Complete details of this derivation may be found in [33].

3.2 THERMAL ANALYSIS

The thermal analysis for laminated composites is developed by following the strain history of the individual lamina from the uncured state through curing to the final bonded state. The material properties of the lamina are assumed to be constant through the temperature range, thus neglecting any degradation effects. Combining these thermal curing effects with the effects of increased or decreased operating temperature on the laminate, the total thermal analysis can be developed. Initially, examining the coefficients of thermal expansion in the natural coordinate system, the strains due to a temperature change for the kth ply can be obtained. Thus the expressions for the free thermal strains in natural coordinates are,

$$\varepsilon_1 = \alpha_1 \Delta T$$
$$\varepsilon_2 = \alpha_2 \Delta T \tag{3.23}$$

or more simply in vector form for the kth ply are,

$$\begin{Bmatrix} \varepsilon_1 \\ \varepsilon_2 \\ \frac{\gamma_{12}}{2} \end{Bmatrix}_k = \begin{Bmatrix} \alpha_1 \\ \alpha_2 \\ 0 \end{Bmatrix}_k \Delta T \tag{3.24}$$

The strains of (3.24) may be transformed to x,y coordinate system by means of (3.6) and (3.11) as expressed below,

$$\begin{Bmatrix} \varepsilon_x \\ \varepsilon_y \\ \gamma_{xy} \end{Bmatrix}_k = [R][T]_k^{-1} \begin{Bmatrix} \alpha_1 \\ \alpha_2 \\ 0 \end{Bmatrix}_k \Delta T = \begin{Bmatrix} \alpha_x \\ \alpha_y \\ \alpha_{xy} \end{Bmatrix}_k \Delta T \tag{3.25}$$

where the coefficients of thermal expansion are transformed to the x,y coordinate system and noting the α_{xy} term as an apparent coefficient of thermal shear. The expressions for stress resulting from thermal strain, if the lamina is restrained, may be found by substituting (3.24) in (3.3), yielding,

$$\begin{Bmatrix} \sigma_1 \\ \sigma_2 \\ \tau_{12} \end{Bmatrix}_k = [Q]_k \begin{Bmatrix} \alpha_1 \\ \alpha_2 \\ 0 \end{Bmatrix}_k \Delta T \tag{3.26}$$

Also in x, y coordinates the stresses may be found by substituting

(3.25) in (3.14) yielding,

$$\begin{Bmatrix} \sigma_x \\ \sigma_y \\ \tau_{xy} \end{Bmatrix}_k = [\bar{Q}]_k \begin{Bmatrix} \alpha_x \\ \alpha_y \\ \alpha_{xy} \end{Bmatrix}_k \Delta T \tag{3.27}$$

The next step is to develop an expression for the coefficients of thermal expansion for the laminate. Substituting (3.27) in (3.18) to obtain the equivalent forces due to the thermal loadings for a symmetric laminate [B] = 0 yields,

$$\{N\} = \Delta T \int_{-H}^{H} [\bar{Q}]_k \{\alpha_x\}_k \, dz \tag{3.28}$$

and

$$\{N\} = [A]\{\varepsilon^o\} = \Delta T \sum_{k=1}^{n} [\bar{Q}]_k \{\alpha_x\}_k (z_k - z_{k-1}) \tag{3.29}$$

where {N} is the equivalent thermal force and $\{\varepsilon^o\}$ is the equivalent thermal midplane strain which is uniform through the laminate. Thus, if (3.29) is rearranged to yield midplane thermal strain,

$$\{\varepsilon^o\} = [A]^{-1} \sum_{k=1}^{n} [\bar{Q}]_k \{\alpha_x\}_k (z_k - z_{k-1}) \Delta T \tag{3.30}$$

where, simplifying to separate the laminate coefficient of thermal expansion yields,

$$\{\bar{\alpha}\} = \sum_{k=1}^{n} [\bar{Q}]_k \{\alpha_x\}_k (z_k - z_{k-1}) \tag{3.31}$$

The analysis via the strain history is now developed. The indi-

vidual plies are laid together in the specified angular orientations at ambient temperature and are then subjected to pressure and heat. The temperature is raised to a maximum and then decreased through the stress free temperature down to ambient, the specifics of the cycle may vary but this is a general description. The lamina are considered cured into a laminate after the stress free temperature is reached and no longer act individually. The laminate behaves as a single structural component from the stress free temperature down to the ambient temperature and then either up or down to the operating temperature. A typical laminate cure cycle may be seen in (Fig. 4). Due to this change from the unbonded to the bonded state at different temperatures, each effect must be accounted for in the analysis. With this temperature history in mind the strains of the laminae (Fig. 5) are formulated,

$$\begin{aligned} \{\varepsilon_x\}_1 &= \{\alpha_x\}_1 \, \Delta T^1 + \{\alpha_x\}_1 \, \Delta T^2 + \{\bar{\alpha}\} \, \Delta T^3 \\ \{\varepsilon_x\}_2 &= \{\alpha_x\}_2 \, \Delta T^1 + \{\alpha_x\}_2 \, \Delta T^2 + \{\bar{\alpha}\} \, \Delta T^3 \end{aligned} \tag{3.32}$$

and,

$$\Delta T^1 + \Delta T^2 + \Delta T^3 = 0 \tag{3.33}$$

thus,

$$\Delta T^3 = - (\Delta T^1 + \Delta T^2) \tag{3.34}$$

The strains produced in the curing process will be designated residual thermal strains and expressed as

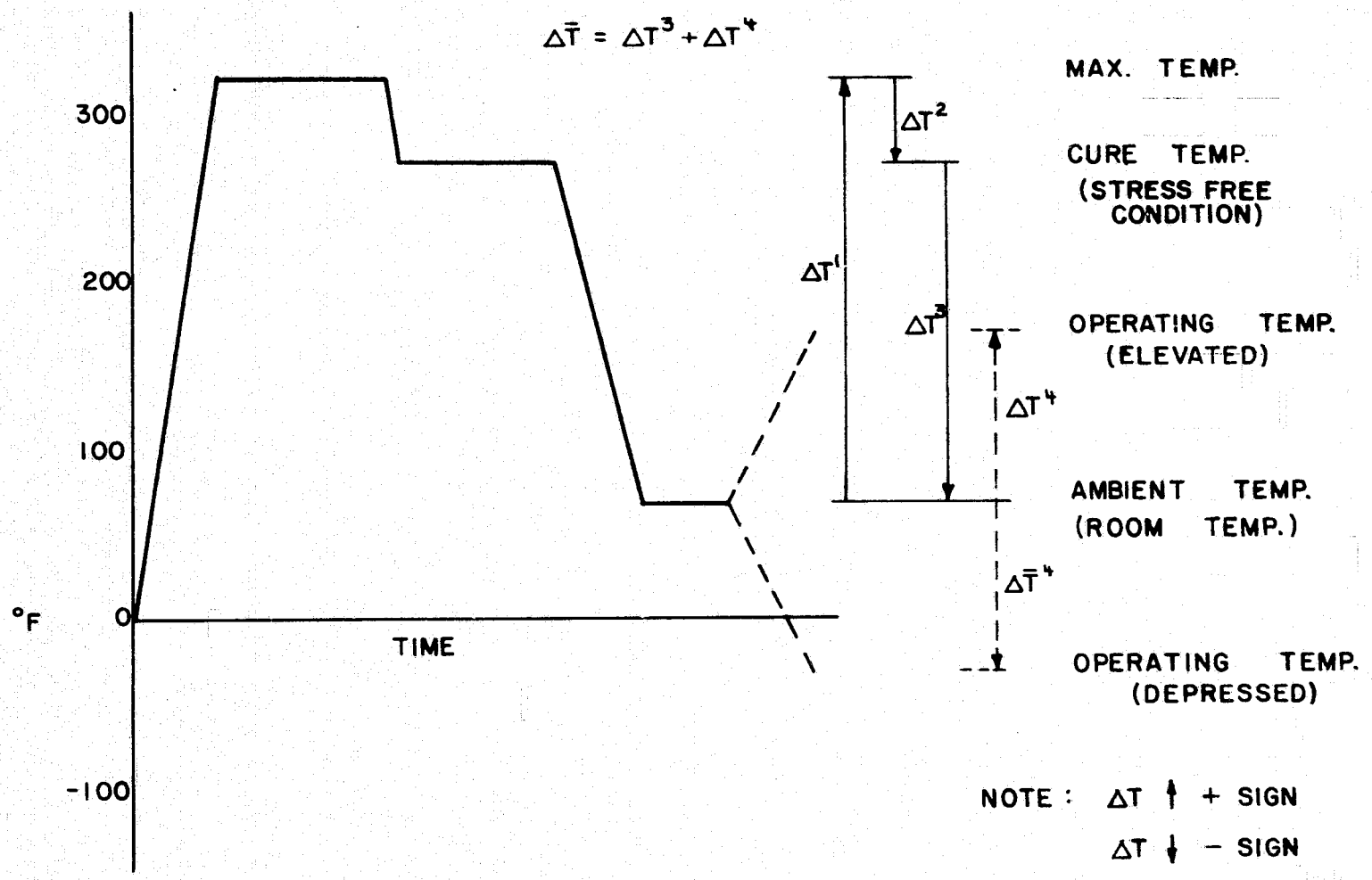

FIGURE 4. LAMINA TEMPERATURE HISTORY

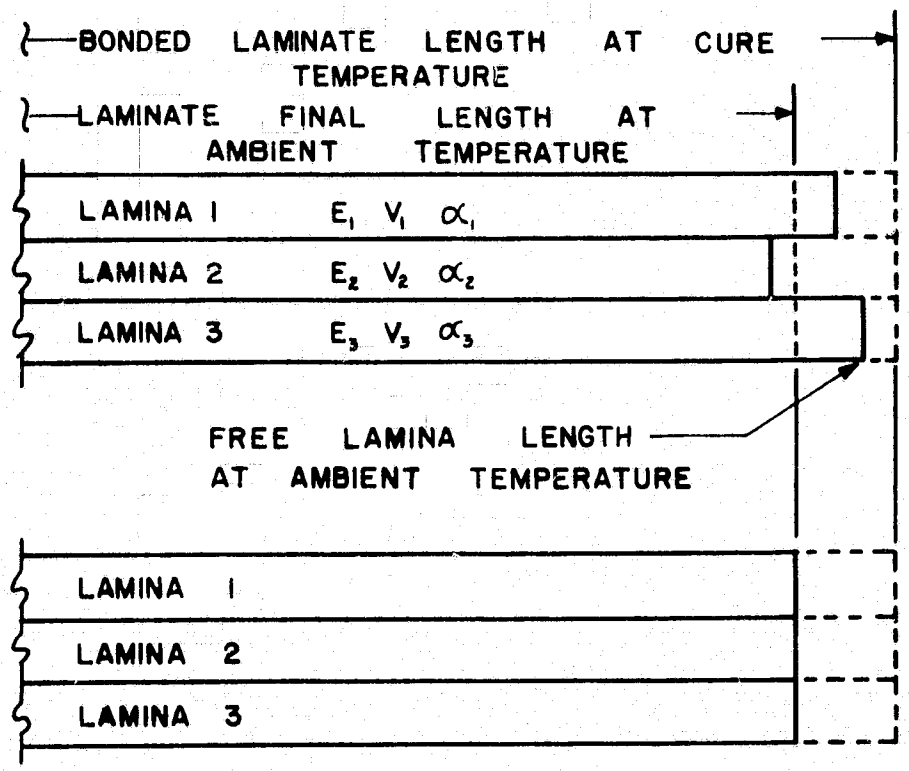

FIGURE 5. LAMINA THERMAL MISMATCH

$$\{\varepsilon_x\}_1^R = \{\alpha_x\}_1(-\Delta T^3) + \{\bar{\alpha}\}\,\Delta T^3 = \Delta T^3(\{\bar{\alpha}\} - \{\alpha_x\}_1)$$
$$\{\varepsilon_x\}_2^R = \{\alpha_x\}_2(-\Delta T^3) + \{\bar{\alpha}\}\,\Delta T^3 = \Delta T^3(\{\bar{\alpha}\} - \{\alpha_x\}_2) \tag{3.35}$$

or in general form,

$$\{\varepsilon_x\}_k^R = \Delta T^3[\{\bar{\alpha}\} - \{\alpha_x\}_k] \tag{3.36}$$

where,

$$\{\varepsilon^o\}^R = \Delta T^3\ \{\bar{\alpha}\} \tag{3.37}$$

and the equivalent forces

$$\{N\}^R = [A]\{\varepsilon^o\}^R \tag{3.38}$$

Substituting (3.36) in (3.14) results in the expression for the equivalent stresses,

$$\{\sigma_x\}_k^R = [\bar{Q}]_k\Delta T^3(\{\bar{\alpha}\} - \{\alpha_x\}_k) \tag{3.39}$$

In a similar manner the expressions for the stresses and strains due to the temperature change from ambient to operating can be derived. During this change the laminate is bonded and no effects for the individual lamina are included, thus,

$$\{\varepsilon_x\}_k^E = \{\varepsilon^o\}^E = \Delta T^4\{\bar{\alpha}\} \tag{3.40}$$

and the additional equivalent forces are,

$$\{N\}^E = [A]\{\varepsilon^o\}^E \tag{3.41}$$

Substituting (3.40) in (3.14) results in the expression for the

additional equivalent stresses

$$\{\sigma_x\}^E_k = [\bar{Q}]_k \Delta T^4 \{\bar{\alpha}\} \tag{3.42}$$

The total temperature effect may now be formulated by combining the two effects, however, first the term $\bar{\Delta}T$ may be defined as,

$$\bar{\Delta}T = \Delta T^3 + \Delta T^4 \tag{3.43}$$

The results of (3.43) may be used to simplify the equations that follow, thus the total midplane strain is,

$$\{\varepsilon^o\}^{\bar{T}} = \{\varepsilon^o\}^R + \{\varepsilon^o\}^E = \Delta\bar{T}\{\bar{\alpha}\} \tag{3.44}$$

and total equivalent forces are,

$$\{N\}^{\bar{T}} = \{N\}^R + \{N\}^E = [A]\{\varepsilon^o\}^{\bar{T}} \tag{3.45}$$

The lamina strains may be expressed as,

$$\{\varepsilon_x\}^{\bar{T}}_k = \{\varepsilon_x\}^R_k + \{\varepsilon_x\}^E_k = \Delta\bar{T}\{\bar{\alpha}\} - \Delta T^3\{\alpha_x\}_k \tag{3.46}$$

and the resultant equivalent stresses are,

$$\{\sigma_x\}^{\bar{T}}_k = \{\sigma_x\}^R_k + \{\sigma_x\}^E_k = [\bar{Q}]_k \Delta\bar{T}(\{\bar{\alpha}\} - \{\alpha_x\}_k) \tag{3.47}$$

Thus, if the cured state is restored ($\Delta\bar{T}$=0) or in other words the lamina strains are present but the stress-free state is satisfied as is now shown,

$$\{\varepsilon_x\}^{\bar{T}}_k = \Delta T^3\{\alpha_x\}_k \tag{3.48}$$

$$\{\sigma_x\}_k^T = 0 \tag{3.49}$$

3.3 LAMINATE ENGINEERING CONSTANTS

The laminate engineering constants may be determined for a symmetric laminate by applying a unit inplane load, only in the direction of the desired constants. This may be shown by the following relationship,

$$\begin{Bmatrix} \varepsilon_x^o \\ \varepsilon_y^o \\ \gamma_{xy}^o \end{Bmatrix} = \begin{bmatrix} A_{11}^{-1} & A_{12}^{-1} & A_{16}^{-1} \\ A_{12}^{-1} & A_{22}^{-1} & A_{26}^{-1} \\ A_{16}^{-1} & A_{26}^{-1} & A_{66}^{-1} \end{bmatrix} \begin{Bmatrix} \bar{\sigma}_x \\ \bar{\sigma}_y \\ \bar{\tau}_{xy} \end{Bmatrix} \tag{3.48}$$

where the average stresses $\{\bar{\sigma}_x\}$ are,

$$\begin{Bmatrix} \bar{\sigma}_x \\ \bar{\sigma}_y \\ \bar{\tau}_{xy} \end{Bmatrix} = \frac{1}{2H} \begin{Bmatrix} N_x \\ N_y \\ N_{xy} \end{Bmatrix} \tag{3.49}$$

and 2H is the total thickness.

Defining Youngs modulus as,

$$E_i = \frac{\sigma_i}{\varepsilon_i} \quad i=x,y,xy \tag{3.50}$$

Thus for N_x equaling unity the relationships for average stress and midplane strain become

$$\bar{\sigma}_x = N_x\left(\frac{1}{2H}\right) \tag{3.51}$$

REPRODUCIBILITY OF THE
ORIGINAL PAGE IS POOR

and

$$\varepsilon_x^o = A_{11}^{-1} N_x \tag{3.52}$$

Substituting (3.51) and (3.52) in (3.50) yields,

$$E_x = \frac{N_x(\frac{1}{2H})}{A_{11}^{-1} N_x} = \frac{\frac{1}{2H}}{A_{11}^{-1}} = \frac{1}{A_{11}^{-1}(2H)} \tag{3.53}$$

In a similar manner E_y and G_{xy} are

$$E_y = \frac{1}{A_{22}^{-1}(2H)} \tag{3.54}$$

and

$$G_{xy} = \frac{1}{A_{66}^{-1}(2H)} \tag{3.55}$$

The expressions for Poisson's ratio may be derived by the same method, first defining Poisson's ratio as

$$\nu_{ij} = -\frac{\varepsilon_j}{\varepsilon_i} \quad i,j=x,y \tag{3.56}$$

yields

$$\nu_{xy} = -\frac{\varepsilon_y}{\varepsilon_x} = -\frac{A_{21}^{-1}}{A_{11}^{-1}} \tag{3.57}$$

and

$$\nu_{yx} = -\frac{\varepsilon_x}{\varepsilon_y} = -\frac{A_{21}^{-1}}{A_{22}} \tag{3.58}$$

Further constants of interest are those of [34] by Lekhnitski called coefficients of mutual influence. These are simply

presented here, more detail may be found in the previously mentioned reference,

$$\eta_{i,ij} = \frac{\varepsilon_i}{\gamma_{ij}} \quad i,j=x,y \tag{3.59}$$

for $\tau_{ij} = 1$ and all other stresses are zero, similarly,

$$\eta_{ij,i} = \frac{\gamma_{ij}}{\varepsilon_i} \quad i,j=x,y \tag{3.60}$$

for $\sigma_i = 1$ and all other stresses are zero. Thus these coefficients may be expressed as follows,

$$\eta_{x,xy} = \frac{A_{16}^{-1}}{A_{66}^{-1}} \tag{3.61}$$

$$\eta_{y,yx} = \frac{A_{26}^{-1}}{A_{66}^{-1}} \tag{3.62}$$

$$\eta_{xy,x} = \frac{A_{16}^{-1}}{A_{11}^{-1}} \tag{3.63}$$

$$\eta_{yx,y} = \frac{A_{26}^{-1}}{A_{22}^{-1}} \tag{3.64}$$

3.4 FAILURE ANALYSIS

The failure analysis is formulated on the basis of the Tsai-Hill [35] criteria for a lamina. Failure of the laminate is based on the first ply failure theory such that if one ply fails the entire laminate is considered to have failed. This criteria may be expressed in terms of the lamina natural coordinate stresses and the individual

lamina strengths as follows,

$$\frac{\sigma_1^2}{X^2} - \frac{\sigma_1\sigma_2}{X^2} + \frac{\sigma_2^2}{Y^2} + \frac{\tau_{12}^2}{S^2} \leq 1 \qquad (3.65)$$

This criteria was chosen over the Tsai-Wu theory [36] in order to avoid the laboratory determination of a key value needed for the evaluation.

The Tsai-Wu theory is of a more general nature and offers a more responsive strength determination due to the greater number of terms. This greater accuracy requires the knowledge of an experimental value that must be determined by means of a biaxial test to failure. Also, the results from the two theories differ only to a small extent over the range of most angular orientations.

3.5 STRAIN ENERGY

The total strain energy of the laminate is determined by means of a summation of the components strain energy due to the various mechanical and thermal loadings.

The general expression for the elastic strain energy of a linear, elastic body may be found by considering an infinitesimal element (Fig. 6) of dimensions dx, dy and dz. Thus for the uniaxial stress state the force acting on the right or left face is σ_x dy dz where dy dz represent an infinitesimal area of the element. Due to this force the element deforms an amount ε_x dx where ε_x is the strain in the x direction. Having assumed linear, elastic material, stress is pro-

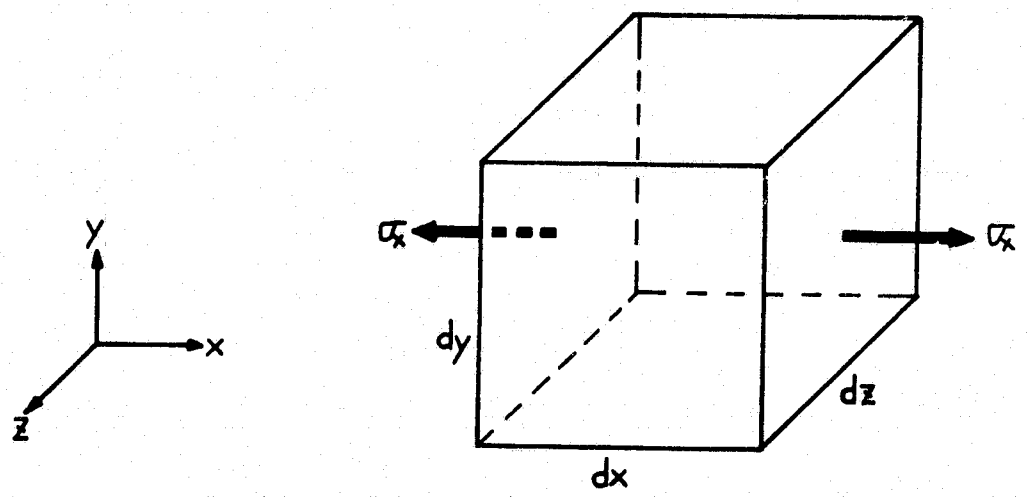

FIGURE 6. ELEMENT IN UNIAXIAL TENSION

portional to strain and further, the force acting on the element increases from zero to its full value in a linear value. The average force acting on the element during the time that deformation is taking place is σ_x dy dz/$_2$. The average force multiplied by the distance through which it acts is the total work done on the element. There is no dissipation of energy for a perfectly elastic body and therefore the work done on the element is stored as recoverable internal strain energy. The strain energy may be expressed as

$$dU = (\frac{1}{2}\sigma_x \, dy \, dz) \cdot (\varepsilon_x \, dx) = \frac{1}{2}\sigma_x \, \varepsilon_x \, dV \qquad (3.66)$$

where dV is the element volume. Rearranging (3.66) yields the strain-energy density

$$\frac{dU}{dV} = \bar{U} = \frac{\sigma_x \, \varepsilon_x}{2} \qquad (3.67)$$

Similar expressions may be derived for σ_y and τ_{xy}.

The total strain energy for the laminate Φ, is expressed as,

$$\bar{U} = \frac{1}{2} \sum_{k=1}^{n} (\{\sigma_i\}_k^M \{\varepsilon_i\}_k^M + \{\sigma_i\}_k^T \{\varepsilon_i\}_k^T) \qquad (3.68)$$

where repeated subscripts i indicate summation and M denotes mechanical loading effects.

Chapter 4

OPTIMIZATION FORMULATION

4.1 GENERAL

The optimization procedure used is the AESOP program described in Ref. [37,38]. Basically, this program is a series of multivariate search techniques for non-linear systems. The optimizer is easily coupled to the synthesis program by means of storage linkages. The synthesis program computes the objective function and the constraints functions which are then supplied to the optimizer for evaluation. The optimizer then perturbs the design variables until an optimum design, consistant with constraint conditions, is obtained. Nine different search techniques may be employed, either separately or in any combination to seek an optimum, thus allowing freedom from method dependent solution problems. A maximum of one hundred design variables are permitted while as many as twenty constraints functions may be utilized. Details may be obtained from the references.

The search techniques available in AESOP and a brief description of each follow,

(1) Sectioning - series of one-dimensional searches parallel to the coordinate axes.

(2) Pattern - search in direction of the previous favorable search.

(3) Magnification - search in direction of gain due to proportional change at all parameters.

(4) Steepest-Descent - search along the weighted gradient

direction

(5) Adaptive Creeping - similar to (1), but small increments in general minimum direction.

(6) Quadratic - similar to (4) but search direction is along a sequence of second-order surfaces as opposed to first-order surfaces of (4).

(7) Davidon's Method - series of searches of (4) type to approximate a search of type (6).

(8) Random Point - evaluation of function at a set of uniformly random points.

(9) Random Ray - search along a sequence of random rays having uniform distribution.

4.2 MATHEMATICAL FORMULATION

The mathematical formulation of the multivariate optimization is presented for the general case without any technique dependent aspects. Basically, the goal is minimization of an objective function of the form,

$$\Phi = \Phi(\beta_i) \quad i=1,2,\ldots,m \tag{4.1}$$

where β_i are the design variables subject to a system of constraints,

$$\Psi_j = \Psi_j(\beta_i) = \Omega; \; j=1,2,\ldots,P \tag{4.2}$$

Constraints may also be applied directly to the independent variables by specifying a feasible control space as follows,

$$\beta_i^L \leq \beta_i \leq \beta_i^H \quad i=1,2,\ldots,m \tag{4.3}$$

Further, constraint functions of an equality nature may be treated as an unconstrained problem by replacing the objective function with a penalized objective function as follows

$$\Phi = \bar{U} + \sum_{j=1}^{p} W_j \cdot \Psi_j^2 \qquad (4.4)$$

where if the W_j (the positive error weighting constants) are sufficiently large in magnitude, minimization of (4.4) is the equivalent of minimization of (4.1) subject to (4.2).

This method is referred to as the exterior penalty function approach. Use of this approach results in the design only being valid if all constraints are satisfied, thus only the final solution, if met, is a valid design. This is opposed to an interior penalty function approach where each design satisfies a set inequality constraints and each successive design approaches the minimum.

Chapter 5

RESULTS AND DISCUSSION

The computer program developed in accordance with Chapter 3 and 4 was used to solve a series of example problems to demonstrate the various design options. These example problems used Boron/Epoxy, AVCO 5505/4 as the design material.

Designs were determined for one mechanical and one temperature loading case with constraints on stiffness and/or coefficients of thermal expansion and/or ply strength. These desired constraint values correspond to the material properties of titanium, aluminum and an all composite [0,±45,0] 8 ply, symmetric, Boron/Epoxy laminate (Table 1).

The mechanical loads represent a case where ply failure will be critical and therefore tax the strength criteria. Temperature loads were chosen for a typical cure and operating environment. These loads will be used for all problems unless noted otherwise (Table 2).

Additionally, all examples were run for 300 function evaluations with all other optimization parameters being identical.

The design options are broken down into the various catagories in the results. The major division is whether or not the strength criteria is considered as in sections 5.1 and 5.2. These sections each have subsections according to which method is chosen, either letting the angles vary from -90° to 90° for a set number of plies or to let the number of plies vary for each set ply angle. Only the first of

TABLE 1

MATERIAL PROPERTIES

	Boron/Epoxy AVCO 5505/4	Boron/Epoxy [0,±45,0]	Titanium	Aluminum
E_x(msi)	30.0	17.05	15.8	10.4
E_y(msi)	2.7	5.23		
G_{xy}(msi)	0.93	4.43	6.0	3.9
ν_{xy}	0.21	0.67	0.34	0.33
α_x(μin/in/^{o}F)	2.5	2.28	4.8	13.1
α_y(μin/in/^{o}F)	13.1	6.45		
X_T(ksi)	188		140	80
X_C(ksi)	-362			
Y_T(ksi)	9.1			
Y_C(ksi)	-45			
Z(ksi)	19.2			

TABLE 2

MECHANICAL AND TEMPERATURE LOADS

$N_x = 1440$ lb/in

$N_y = 1440$ lb/in

$N_{xy} = 1020$ lb/in

$\Delta T^3 = -200^o$ F

$\Delta T^4 = 100^o$ F

these options is available in section 5.1 for design without a strength criteria. It is felt that the problem of constraints on material properties, or material property matching, can best be resolved by means of reorientation alone. Furthermore, the option for perturbing the number of plies is felt to be needed primarily for strength considerations. It may be noted that for the option of perturbing ply angles for a set number of plies that the number of plies will fluctuate. This is due to the fact that for angles of the range $-90^{o} < \theta < 0^{o}$ and $0^{o} < \theta < 90^{o}$ (angle ply laminate) a positive theta ply is always accompanied by a negative ply .

Initially, a test problem to check out the minimization process was run for temperature loading only and without constraints. Intuitively, it was felt that this should yield some unidirectional laminate, having a total strain energy of zero. Three problems, using 2, 4 and 8 plies, yielded the following results (Table 3). The results demonstrated that the computer program was performing as expected and on this basis the following examples were run.

These designs are constrained to match various, feasible material properties while minimizing the total laminate strain energy. The results obtained are presented and discussed to validate the design process employed.

5.1 DESIGNS WITH MATERIAL PROPERTIES CONSTRAINED

This section deals with the problem of using a composite laminate to match the material properties of another material. There are many

TABLE 3

UNCONSTRAINED STRAIN ENERGY RESULTS

Number of Plies	Final Configuration	Strain Energy	Number of Evaluations
2	$[24]_s$	0.3980 E-14	17
4	[7.4,7.6,8.0,7.2]	0.9048 E-03	68
8	$[8.8,7.6,8.0,8.0]_s$	0.3873 E-02	134

occasions where strength is not of primary consideration, due to the fact that the design is minimum thickness critical, such as aircraft skin designs. Another area where material property considerations are critical is that of extreme, thermal deflection requirements.

These applications represent a large part of the present thrust of composite hardware technology, which deals with the replacement of present hardware with a composite design. The importance of property matching is illustrated when the composite replacement part is compared to the present part, for properties being equal, the composite is advantageous on the basis of weight.

5.1.1 DESIGNED BY PERTURBING PLY ANGLES FOR A SET NUMBER OF PLIES

This approach to a non-strength critical design relies entirely on the angles or orientation to satisfy the stated constraints and locate a minimum strain energy laminate. The possible number of combinations of angles increases as the number of plies increase, therefore the number of plies chosen for the starting point deserves serious consideration and should be adequate to allow the process the proper amount of freedom to satisfy the various constraints. The examples of this section were run for 2 plies, thus the maximum number of plies is 8 for an angle ply laminate and 4 for a unidirectional or cross ply laminate. The factor of two is due to the assumption of symmetry for the laminate.

5.1.1.1 COMPOSITE LAMINATE TAILORED TO MATCH THE PROPERTIES OF A $[0,\pm45,0]_s$ LAMINATE

The use of an all composite example is to check out the program for convergence to a known feasible design. The boron/epoxy $[0,\pm45,0]_s$ was analyzed, using the analysis option, to obtain the laminate properties that were given earlier in this chapter. Seven various cases were run for this target material for the standard mechanical and temperature loads, unless noted. The constraints and nonstandard conditions for these were, as follows;

(1) E_x, E_y and G_{xy} constrained;

(2) E_x and E_y constrained;

(3) α_x and α_y constrained;

(4) E_x, E_y and G_{xy} constrained, $N_y = 0$;

(5) E_x, E_y and G_{xy} constrained, $N_y = N_{xy} = 0$;

(6) E_x, E_y and G_{xy} constrained, $N_x = N_y = N_{xy} = 0$;

(7) E_x, E_y and G_{xy} constrained, $\Delta T^3 = \Delta T^4 = 0$.

These results are shown in Table 4.

Cases (1), (2) and (3) offer the best overall convergence to target properties and also demonstrate reduced strain energy at between 5 to 10 percent compared to the target material. Case (3), oddly enough, has good convergence to properties other than those constrained and has excellent thermal tailoring ability.

The nonstandard loading conditions yield reasonable property tailoring, with (4) being the most responsive for variations of mechanical loads. Deletion of temperature loads, in example (7),

TABLE 4

COMPOSITE LAMINATE - $[0,\pm45,0]_s$ RESULTS FOR PLY ANGLES PERTURBED WITH MATERIAL PROPERTIES CONSTRAINED

	Target Material	Cases 1: E_x, E_y and G_{xy} Constained	2: E_x and E_y Constrained	3: α_x and α_y Constrained	4: E_x, E_y and G_{xy} Constrained $N_y=0$	5: E_x, E_y and G_{xy} Constrained $N_y=N_{xy}=0$	6: E_x, E_y and G_{xy} Constrained $N_x=N_y=N_{xy}=0$	7: E_x, E_y and G_{xy} Constrained $\Delta T^3=\Delta T^4=0$
Laminate	$[0,\pm45,0]_s$	$[\pm51,\pm7]_s$	$[\pm50,\pm7]_s$	$[\pm45,\pm12]_s$	$[\pm50,\pm4]_s$	$[\pm20,\pm25]_s$	$[\pm14,\pm30]_s$	$[\pm49,\pm5]_s$
E_x(msi)	17.05	15.87	15.92	15.05	16.35	17.51	18.07	16.30
%		-6.9	-6.6	-11.7	-4.1	+2.7	+6.0	-4.4
E_y(msi)	5.23	6.70	6.41	4.92	6.49	2.53	2.85	6.19
%		+28.2	+22.6	-5.9	+24.0	-51.6	-45.5	+18.4
G_{xy}(msi)	4.43	4.48	4.53	5.01	4.39	4.43	4.32	4.46
%		+1.2	+2.3	+13.0	-0.8	0.0	-2.5	+0.7
ν_{xy}	0.67	0.54	0.57	0.76	0.55	1.25	1.12	0.58
%		-19.4	-10.9	+13.4	-17.9	+86.6	+67.2	-13.4
α_x(μin/in/°F)	2.28	2.59	2.53	2.17	2.54	1.23	1.47	2.48
%		+13.6	+11.0	-5.0	+11.4	-46.1	-35.5	+8.8
α_y(μin/in/°F)	6.45	5.30	5.46	6.47	5.47	11.85	10.80	5.64
		-17.8	-15.3	+0.3	-15.2	+83.7	+67.4	-12.6
Strain energy (varies with loading)		1356	1369	1424	841	297	9	1267
%		-9.7	-8.9	-5.2	-3.7	-10.0	-51.4	-7.1

NOTE: all percentages refer to variations with respect to the target material.

REPRODUCIBILITY OF THE ORIGINAL PAGE IS POOR

also resulted in rather good overall property convergence. Cases (5) and (6) exhibit a fairly wide spread of values other than E_x and G_{xy}.

The larger variations of E_y can be attributed to its smaller value, relative to E_x and G_{xy} combined with use of equal error constraint weighting factors.

Using nonstandard load conditions demonstrates the ability of the optimization procedure to respond to different load environments. This ability is apparent, except for the variation of E_y for the previously stated reasons, in the error range found for E_x and G_{xy}, which is similar to the standard load cases.

The overall response was quite good for this target material and demonstrated the ability to selectively tailor properties by means of the strain energy optimization method. There was no effort made to constrain all six parameters. It is felt that this may not be a realistic design situation. The failure of the method to return to the $[0,\pm45,0]_s$ laminate used for the target properties may be explained by the fact that the penality function, with constraint error weights included, may be smaller than the strain energy alone for the target laminate. The design found by this method may be termed a more feasible one if bounds can be formulated for the desired properties.

5.1.1.2 COMPOSITE LAMINATE TAILORED TO MATCH THE PROPERTIES OF TITANIUM

This section deals with tailoring properties to match those of the material which is most closely in competition with composite

TABLE 5

COMPOSITE LAMINATE - TITANIUM RESULTS FOR PLY ANGLES PERTURBED WITH MATERIAL PROPERTIES CONSTRAINED

	Target Material	Cases 1 E_x, E_y and G_{xy} Constrained	2 E_x and E_y Constrained	3 α_x and α_y Constrained
Laminate		$[\pm 28, \pm 62]_s$	$[\pm 77, \pm 13]_s$	$[\pm 59, \pm 31]_s$
E_x(msi)	15.80	9.12	14.83	7.66
%		-42.3	-6.1	-49.2
E_y(msi)	15.80	9.12	14.83	7.66
%		-42.3	-6.1	-49.2
G_{xy}(msi)	6.00	5.74	2.28	6.38
%		-4.4	-62.1	+6.3
ν_{xy}	0.34	0.46	0.13	0.55
%		+36.2	-62.7	+61.8
α_x(μin/in/^{o}F)	4.80	3.52	3.52	3.52
%		-26.6	-26.6	-26.6
α_y(μin/in/^{o}F)	4.80	3.52	3.52	3.52
%		-26.6	-26.6	-26.6
Stain energy		1103	1741	1061

NOTE: All percentages refer to variations with respect to the target material.

laminates from the standpoint of strength, stiffness and weight. Three cases were run for this target material, all with standard loadings and the following constraints;

(1) E_x, E_y and G_{xy} constrained;

(2) E_x and E_y constrained;

(3) α_x and α_y constrained.

The results of these examples may be found in Table 5.

These cases were constrained to have properties equal in both x and y directions. This may not be a reasonable situation. The results of case (1) show good agreement only for G_{xy}. The agreement of E_x, E_y and G_{xy} simultaneously may not be possible due to the relatively high stiffness in all three directions of titanium. This may be shown in case (2) where the constraint on G_{xy} is relaxed and E_x and E_y are more readily satisfied. Continuing to case (3), the thermal values are not satisfied, but the values determined are equivalent to those of a cross-ply laminate, thus this is as close as it is physically possible to come to the constrained situation.

This material illustrates the need for selective tailoring. A cross-ply laminate $[0,90,90,0]_s$ would be a viable solution but only by paying a large penalty in strain energy and still violating both G_{xy} and ν_{xy} very seriously. Case (2) best satisfies E_x and E_y but also has the highest strain energy. It may also be noted that each of these cases resulted in a laminate which contains two sets of plies, each 90 degrees opposed.

Although results were not as appealing as in the previous section,

for a known feasible design, this section reveals the possibility of mutually inconsistent design parameters. This highlights the value of selective tailoring as an essential in laminate design.

5.1.1.3 COMPOSITE LAMINATE TAILORED TO MATCH THE PROPERTIES OF ALUMINUM

The cases run for aluminum present a different type of problem. The elastic and shear modulus for aluminum is low enough that matching these properties is not difficult but tne thermal properties are out of the feasible range of composite laminates. For this reason the case for matching thermal properties was dropped and only the following two cases were run for the standard loading conditions;

(1) E_x, E_y and G_{xy} constrained;

(2) E_x and E_y constrained.

As expected these results (Table 6) were good for the stiffness properties and inadequate for the thermal properties. The relaxation of the shear constraint resulted in some slight improvement of stiffness properties but not appreciably. Once again the resultant laminate has approximately two sets of plies 90 degrees opposed, but at a slightly different orientation.

This case shows the readily available opportunity for replacement of aluminum hardware as long as thermal expansion is not critical.

5.2 DESIGNS WITH MATERIAL PROPERTIES AND PLY FAILURES CONSTRAINED

Strength requirements acquire greater importance in primary

TABLE 6

COMPOSITE LAMINATE - ALUMINUM RESULTS FOR PLY ANGLES PERTURBED WITH MATERIAL PROPERTIES CONSTRAINED

	Target Material	Cases 1 E_x, E_y and G_{xy} Constrained	Cases 2 E_x and E_y Constrained
Laminate		$[\pm 69, \pm 21]_s$	$[\pm 64, \pm 28]_s$
E_x(msi)	10.40	12.25	9.29
%		+17.8	-10.7
E_y(msi)	10.40	12.25	9.92
%		+17.8	-4.6
G_{xy}(msi)	3.90	4.06	5.50
%		+4.1	+41.0
ν_{xy}	0.33	0.28	0.42
%		-15.6	+27.3
α_x(μin/in/^{o}F)	13.10	3.52	3.63
%		-73.1	-72.3
α_y(μin/in/^{o}F)	13.10	3.52	3.42
%		-73.1	-73.9
Strain energy		1276	1121

Note: All percentages refer to variations with respect to the target material.

structure applications. In these areas, the ultimate load carrying capacity is most generally the governing factor in design. The consideration of a strength criteria in the design is included by means of one constraint for each ply failure computation. The Tsai-Hill failure criteria is used where the numerical value must be less than or equal to unity to assure that the individual ply has not failed. The laminate is considered failed if one ply has failed.

On this basis two example problems were run, first by perturbing the ply angles for a set number of plies and secondly by perturbing the number of plies for a set ply angle with constraints only on ply failure. The results of these problems may be found in Table 7.

These results are for the standard load conditions and the design material used previously. The mechanical loads used should evolve an initial design such that the worst case is present from a strength standpoint. As can be observed from the results, ply failures occur for both methods and furthermore, these failures take place in plies which are roughly perpendicular to the shear force. The placement of these plies is usually the result of the balanced plus-minus angle requirements.

The relative emphasis to be placed on each aspect of the design, either property matching or ply failure, must be decided by the designer. This emphasis may be implemented by means of load factoring, constraint error weighting or some equitable combination of both. The examples presented use the same data throughout for the sake of comparison.

REPRODUCIBILITY OF THE
ORIGINAL PAGE IS POOR

TABLE 7

COMPOSITE LAMINATE RESULTS FOR PLY ANGLES OR NUMBER OF PLIES PERTURBED WITH PLY FAILURES CONSTRAINED

	Ply Number	Cases 1 Ply Angles Perturbed	Cases 2 Number of Plies Perturbed
Laminate		$[\pm 30, 90, \pm 21]_s$	$[90, 90, \pm 45, \pm 45, 0]_s$
	1	0.6015	0.6240
	2	2.1987	0.6240
	3	0.7666	0.2974
ply failure > 1	4	2.0196	1.0911
	5	0.7034	0.2974
	6	-	1.0911
	7	-	0.4832
strain energy		1084	748

5.2.1 DESIGNED BY PERTURBING PLY ANGLES FOR SET NUMBER OF PLIES

The method of perturbing ply angles for a set number of plies relies on the computation of an initial design based on the applied loads. This design is then subjected to a series of angular reorientation until an optimum design is found. From this standpoint the initial design provides the number of plies to be considered, within the restriction that any plus angle is balanced with a minus angle.

The loads in the cases run will result in a $[0,+45,90]_s$ initial laminate design which automatically becomes a $[0,\pm45,90]_s$ laminate due to the above restriction. Thus the resultant design could be between 6 and 12 plies with the factor of two due to symmetry as discussed before.

5.2.1.1 COMPOSITE LAMINATE TAILORED TO MATCH THE PROPERTIES OF A $[0,\pm45,0]_s$ LAMINATE

The all composite material design is geared toward matching a known feasible laminate and satisfying ply failure requirements. Comparisons are also made for strain energy in each laminate. Three cases were run for the standard load conditions and the following constraints;

(1) E_x, E_y and G_{xy} constrained;

(2) E_x and E_y constrained;

(3) α_x and α_y constrained.

The results of which can be found in Table 8. Cases (1) and (3) yield the best convergence with (3) being the superior design from a

TABLE 8

COMPOSITE LAMINATES - $[0,\pm45,0]_s$ RESULTS FOR PLY ANGLES PERTURBED WITH MATERIAL PROPERTIES AND PLY FAILURES CONSTRAINED

	Target Material	Cases 1 E_x, E_y and G_{xy} Constrained	2 E_x and E_y Constrained	3 α_x and α_y Constrained
Laminate	$[0,\pm45,0]_s$	$[\pm29,90,\pm22]_s$	$[\pm1,\pm89,\pm15]_s$	$[\pm27,\pm51,\pm21]_s$
E_x(msi)	17.05	15.43	19.67	12.30
%		-9.5	+15.4	-27.9
E_y(msi)	5.23	8.05	11.80	4.76
%		+53.9	+125.6	-9.0
G_{xy}(msi)	4.43	4.29	1.52	5.73
		-3.2	-65.7	+29.3
ν_{xy}	0.67	0.44	0.10	0.83
%		-34.3	-85.1	+23.9
α_x(μin/in/^{o}F)	2.28	2.81	3.11	2.12
%		+23.2	+36.4	-7.0
α_y(μin/in/^{o}F)	6.45	4.69	4.18	6.16
%		-27.3	-35.2	-4.5
Strain energy	1502	1085	1590	923
%		-27.8	+5.8	-38.6
Number of plies failed		4	4	6

Note: All percentages refer to variations with respect to the target material.

property standpoint. Case (2) seems to be invalid and raises the possibility that a local minima was found due to the glaring disparity of values. Case (1) shows good stiffness tailoring, although the E_y value is high, which may or may not be beneficial. The thermal tailoring characteristics of case (3) are quite good and as a by-product give reasonable stiffness values.

Once again ply failure occurs in the plies perpendicular to the applied shear force. This is due to the high value of transverse stress in each case. The method is reasonable from the property matching standpoint and exhibits capability in both stiffness and thermal tailoring in addition to greatly reduced strain energy.

5.2.1.2 COMPOSITE LAMINATE TAILORED TO MATCH THE PROPERTIES OF TITANIUM

Three cases were run for standard loads and the constraints that follow;

(1) E_x, E_y and G_{xy} constrained;

(2) E_x and E_y constrained;

(3) α_x and α_y constrained.

The results closely parallel those of the preceding section (Table 9). The thermal case yielded the best results in all respects but all suffer from the same fault discussed in section 5.1.1.2 dealing with the possibility of mutual exclusion of constraint values.

The method suffers similar ply failure characteristics dealing with high transverse tensile stresses in plies perpendicular to the

TABLE 9

COMPOSITE LAMINATE - TITANIUM RESULTS FOR PLY ANGLES PERTURBED WITH MATERIAL PROPERTIES AND PLY FAILURES CONSTRAINED

	Target Material	Cases 1 E_x, E_y and G_{xy} Constrained	2 E_x and E_y Constrained	3 α_x and α_y Constrained
Laminate		$[\pm55,\pm74,\pm43]_s$	$[\pm34,\pm75,\pm64]_s$	$[0,\pm89,\pm29]_s$
E_x(msi)	15.80	4.36	6.11	14.10
%		-72.4	-61.3	-10.8
E_y(msi)	15.80	11.49	14.54	13.77
%		-27.3	-8.0	-12.8
G_{xy}(msi)	6.00	5.96	4.96	2.95
%		-0.7	-17.3	-50.8
ν_{xy}	0.34	0.34	0.26	0.18
%		0.0	-23.5	-47.1
α_x(μin/in/^{o}F)	4.80	6.43	5.46	3.50
%		+34.0	+13.8	-27.1
α_y(μin/in/^{o}F)	4.80	1.96	2.48	3.55
%		-59.2	-48.3	-26.0
Strain energy		926	929	1230
Number of plies failed		6	6	2

Note: All percentages refer to variations with respect to the target material.

shear force. The tailoring ability remains quite good, relative to the constraint values required.

5.2.1.3 COMPOSITE LAMINATE TAILORED TO MATCH THE PROPERTIES OF ALUMINUM

The cases are, once again restricted to standard loads and constraints on;

(1) E_x, E_y and G_{xy} constrained;

(2) E_x and E_y constrained.

The results yield good stiffness tailoring for each case, and quite naturally, poor thermal tailoring (Table 10). Additionally, each case yields a laminate not far removed from the initial design. This coupled with the ply failure problem would indicate that the initial design should contain a larger number of plies.

5.2.2 DESIGNED BY PERTURBING THE NUMBER OF PLIES FOR A SET PLY ANGLE

The method presented here relies on the addition or substraction of plies for each set ply angle. Ply angles are in five groups consisting of 90°, $\pm 60^o$, $\pm 45^o$, $\pm 30^o$ and 0°. Initial designs consist of 90°, $\pm 45^o$ and 0° angle combinations depending on the applied loads.

The optimization proceeds by perturbing the number of plies, for each set angle, between 0 and 2 until an optimum design is found. The strain energy is minimized with respect to the constraints on strength and properties. Varying the number of plies should satisfy

TABLE 10

COMPOSITE LAMINATE - ALUMINUM RESULTS FOR PLY ANGLES PERTURBED WITH MATERIAL PROPERTIES AND PLY FAILURES CONSTRAINED

	Target Material	Cases 1 E_x, E_y and G_{xy} Constrained	Cases 2 E_x and E_y Constrained
Laminate		$[0,90,\pm51]_s$	$[\pm57,90,\pm5]_s$
E_x(msi)	10.40	10.59	13.77
%		+1.8	+32.4
E_y(msi)	10.40	13.18	12.95
%		+26.7	+24.5
G_{xy}(msi)	3.90	4.28	3.35
%		+9.7	-14.1
ν_{xy}	0.33	0.27	0.22
%		-18.2	-33.3
α_x(μin/in/^{o}F)	13.10	3.84	3.45
%		-70.7	-73.7
α_y(μin/in/^{o}F)	13.10	3.26	3.60
%		-75.1	-72.5
Strain energy		1254	1151
Number of plies failed		6	4

Note: All percentages refer to variations with respect to the target material.

the strength requirements and provide enough variety of angular orientation to satisfy material property constraints.

5.2.2.1 COMPOSITE LAMINATE TAILORED TO MATCH THE PROPERTIES OF A $[0,\pm45,0]_s$ LAMINATE

The cases for this target material use standard load conditions with the following constraints;

(1) E_x, E_y and G_{xy} constrained;

(2) E_x and E_y constrained;

(3) α_x and α_y constrained.

These results are summarized in Table 11. Of the three cases only (3) responded with viable results. Variations of E_y have been discussed previously and those arguments may also apply here. The failure of the stiffness constraints to yield material properties of an appropriate nature may be due to the large number of ply failure constraints overwhelming the other constraints.

Ply failure due to transverse stresses of negative angle plies continues to appear. The explanation for this may be involved in the use of strain energy as the function to be minimized. Another possibility that offers an explanation is that of stiffness constraints and ply failure constraints, for this loading case, may be mutually exclusive.

The thermal case offers reasonable tailoring along with a large reduction in strain energy. The ply failure constraints for the thermal case are close to being satisfied. The total outlook for

TABLE 11

COMPOSITE LAMINATE - $[0,\pm45,0]_s$ RESULTS WITH NUMBER OF PLIES PERTURBED WITH MATERIAL PROPERTIES AND PLY FAILURES CONSTRAINED

	Target Material	Cases 1 E_x, E_y and G_{xy} Constrained	2 E_x and E_y Constrained	3 α_x and α_y Constrained
Laminate	$[0,\pm45,0]_s$	$[90,\pm45,0]_s$	$[90,90,\pm60,\pm45,0]_s$	$[90,\pm30,\pm30,0]_s$
E_x(msi)	17.05	11.64	8.02	15.51
%		-31.7	-53.0	-9.0
E_y(msi)	5.23	11.64	15.00	7.41
%		+122.6	+186.8	+41.7
G_{xy}(msi)	4.43	4.43	4.43	4.43
%		0.0	0.0	0.0
ν_{xy}(msi)	0.67	0.31	0.24	0.49
%		-53.7	-64.2	-26.9
α_x(μin/in/^{o}F)	2.28	3.52	4.65	2.71
%		+54.4	+103.9	+18.9
α_y(μin/in/^{o}F)	6.45	3.52	2.82	4.93
%		-45.4	-56.3	-23.6
Stain energy	1502	1227	809	935
%		-18.3	-46.1	-37.7
Number of plies failed		6	4	6

Note: All percentages refer to variations with respect to the target material.

case (3) is reasonably good but rather poor for the other two.

5.2.2.2 COMPOSITE LAMINATE TAILORED TO MATCH THE PROPERTIES OF TITANIUM

Three cases were run for titanium with standard loads and the following constraints;

(1) E_x, E_y and G_{xy} constrained;

(2) E_x and E_y constrained;

(3) α_x and α_y.

Results of these cases are found in Table 12 and compare favorably with those of the previous section. Cases (2) and (3) have reasonable property values but case (1) approaches failure compliance more readily.

Overall, case (2) would possibly be viable if the $E_x = E_y$ constraint were relaxed to some extent, additionally the strain energy is quite low.

5.2.2.3 COMPOSITE LAMINATE TAILORING TO MATCH THE PROPERTIES OF ALUMINUM

The two cases for aluminum included standard loadings with constraints on the following;

(1) E_x, E_y and G_{xy} constrained;

(2) E_x and E_y constrained.

Results found in Table 13 follow the same trend, although the stiffness properties are easily match, ply failure of the same nature is encountered.

The aluminum results show that case (1) provides better property

TABLE 12

COMPOSITE LAMINATE - TITANIUM RESULTS FOR NUMBER OF PLIES PERTURBED WITH MATERIAL PROPERTIES AND PLY FAILURES CONSTRAINED

	Target Material	Cases 1 E_x, E_y and G_{xy} Constrained	2 E_x and E_y Constrained	3 α_x and α_y Constrained
Laminate		$[90,\pm60,\pm60,\pm30]_s$	$[90,\pm45,\pm45,0]_s$	$[90,90,\pm45,0]_s$
E_x(msi)	15.80	6.38	9.43	10.18
%		-59.6	-40.3	-35.6
E_y(msi)	15.80	12.63	9.43	15.32
%		-20.1	-40.3	-3.0
G_{xy}(msi)	6.00	5.43	5.59	3.73
		-9.5	-6.8	-37.8
ν_{xy}	0.34	0.32	0.45	0.21
%		-5.9	+32.4	-38.2
α_x(μin/in/^{o}F)	4.80	5.02	3.52	4.12
%		+4.6	-26.7	-14.2
α_y(μin/in/^{o}F)	4.80	2.59	3.52	3.09
%		-46.0	-26.7	-35.6
Strain energy		765	793	1115
Number of plies failed		4	4	6

Note: All percentages refer to variations with respect to the target material.

REPRODUCIBILITY OF THE ORIGINAL PAGE IS POOR

TABLE 13

COMPOSITE LAMINATE - ALUMINUM RESULTS FOR NUMBER OF PLIES PERTURBED WITH MATERIAL PROPERTIES AND PLY FAILURES CONSTRAINED

	Target Material	Cases 1 E_x, E_y and G_{xy} Constrained	Cases 2 E_x and E_y Constrained
Laminate		$[90,\pm45,0]_s$	$[90,90,\pm60,\pm45,0]_s$
E_x(msi)	10.40	11.64	8.02
%		+11.9	-22.9
E_y(msi)	10.40	11.64	15.00
%		+11.9	+44.2
G_{xy}(msi)	3.90	4.43	4.43
%		+13.6	+13.6
ν_{xy}	0.33	0.31	0.24
%		-6.1	-27.3
α_x(μin/in/^{o}F)	13.10	3.52	4.65
%		-73.1	-64.5
α_y(μin/in/^{o}F)	13.10	3.52	2.82
		-73.1	-78.5
Strain energy		1227	809
Number of plies failed		6	4

Note: All percentages refer to variations with respect to the target material.

matching, which is unusual due to extra constraint for shear modulus being relaxed in case (2). This may be an example of the strain energy function overwhelming the weighted constraint errors and resulting in a somewhat misleading design.

Chapter 6

SUMMARY AND CONCLUSIONS

The results and discussion presented in the preceding chapter offer several points for observation.

The results for the optimization without a strength criteria proved to be quite good. The ability to tailor a composite laminate for desired stiffness or thermal properties was readily apparent. Various load conditions provided results which exhibited the responsiveness of the optimization method. Laminates containing a minimum of strain energy were found to be feasible to varying degrees, dependent upon the constraints applied.

The inclusion of a strength criteria greatly degraded the quality of results. Although the property tailoring capability remained viable, it was somewhat restricted. Ply failure, in the plies perpendicular to the applied shear force was a problem for both angles variable and number of plies variable, primarily due to high transverse tension stresses. The methods used in this section produced laminates with lower strain energy values, also dependent upon constraints applied.

Commenting on the overall design technique, leads to several clear points that should come into play during design implementation. The first of these deals with selective tailoring of laminate properties. Tailoring should be applied on a priority basis with possibly upper and lower bounds set for each property. Using a "broad brush" approach to tailoring may result in a non-feasible solution situation.

Further, along this same vein, constraint values in various directions may need to be restricted along with recognizing properties which are out of the feasible range of the design material, such as the thermal properties of aluminum. Another point that should be noted is that of constraint contributions to the penalty function. The effect of each constraint should be approximately equal with respect to the penalty function. The example problems were all run for the same optimization parameters, for comparison purposes. Variation of problems would dictate the tailoring of the optimization parameters to suit the particular problem. The random point search was found to yield excellent starting points for subsequent searches of which the creeping search proved the most effective for the example problems. Initial designs proved to be somewhat inadequate and should be given serious consideration, although this is dependent on applied loads.

There are some limitations in the design process. The AESOP program is formulated on the basis of an exterior penalty function approach to the optimization problem. This means that constraints are allowed to oscillate about the desired constraint value instead of being bounded by the desired value. This method poses problems, especially for failure constraints, where it is essential that the values not exceed the desired constraint value. Another limitation exists in the number of plies variable method. This method involves the use of the number of plies as a continuous design variable. The approach is fine for the optimization algorithm but when the function evaluations take place the number of plies must be discretized, and

thus used in integer form. Truncation to an integer results in somewhat erratic behavior in the optimization scheme as was shown in the numerical results.

The first limitation may possibly be alleviated by the use of an interior penalty function formulation to impose inequality type constraints as opposed to the present equality constraint used. The second limitation may be solved by formulating this type of method in an integer programming framework, the discussion of which is beyond the scope of this investigation.

The method presented has, in varying degrees, shown that the design of a laminate can be accomplished using strain energy minimization as the primary criteria. It is felt that this criteria offers a means of maximizing the reserve strength that the laminate has the potential to exhibit. The inclusion of a failure criteria may be counter to the strain energy criteria. This may be viewed by the fact that the energy criteria seeks to preserve reserve strength while the failure criteria tends to maximize stresses, within failure bounds. Viable trade offs may be reached to make these two purposes compatible.

An optimization method allows the designer the freedom to choose directional properties and to eliminate excess material capability in non-critical directions. Although, the number of plies variable method encountered truncation difficulty, this type of design, using families of plies, is the most practical from the present technology manufacturing standpoint and as such deserves continued development. This type of method coupled with nonlinear programming techniques and

continued development of high speed digital computational hardware promise to yield a design tool of an extremely powerful nature. The use of a tool, such as the AESOP program, should be supplemented with both a knowledge of the analysis technique and a background knowledge of the optimization procedure. These tools and this knowledge must, in the final analysis, be tempered with sound engineering judgment which only the experienced designer possesses.

BIBLIOGRAPHY

1. Hackman, L.E., Stotler, C. L., "Laminate Optimization for Filamentary Composites", 10th National SAMPE Symposium, San Diego, 1966.

2. Waddoups, M.E., "Structural Airframe Application of Advanced Composite Materials, Volume VI - Analytical Methods", AFML-TR-69-101, Feb. 1969.

3. Foye, R.L., Baker, D.J., "A Method for Minimizing Weight and Maximizing the Critical Safety Margins of Thin Laminates", Proceedings of the 6th St. Louis Sym. on Composite Materials in Engineering Design, St. Louis, May 11-12, 1972, pp. 383-390.

4. Bush, H. G., "Analytical Design Method for Strength Optimization of Composite Orthotropic Laminates", Proceedings of the 6th St. Louis Sym. on Composite Materials in Engineering Design, St. Louis, May 11-12, 1972, pp. 391-401.

5. McCuller, L.A., "Automated Design of Advanced Composite Structures", Structural Optimization Symposium, New York, NY, Nov. 17-21, 1974, American Society of Mechanical Engineers, pp. 119-133.

6. Purdy, D.M., "Composite Structures", in Structural Mechanics Computer Programs, ed. by W. D. Pilkey, University Press of Virginia, Charlottesville, VA, 1974, pp. 411-438.

7. Schmit, L.A., Tung, T.K., Advanced Composites Design Guide, Vo. 2, Sect. 2.3, Advanced Development Division, Air Force Materials Laboratory, Wright-Patterson AFB, Ohio, 3rd Edition, Jan. 1973.

8. Schmit, L.A., Jr., Farshi, B., "Optimum Laminate Design for Strength and Stiffness", Int. J. for Numerical Methods in Engineering, Vol. 7, No. 4, 1973, pp. 519-536.

9. Harris, G. Z., "Optimum Fibre Arrangements for Reinforced Sheets under Combined Loading", Aeronautical Research Council, London, England, Nov. 1966.

10. Ashton, J.E., Waddoups, M.E., "Analysis of Anisotropic Plates", Journal of Composite Materials, Vol. 3, Jan. 1969, pp. 148-165.

11. Waddoups, M.E., McCullers, L.A., Olson, F.O., Ashton, J.E., "Structural Synthesis of Anisotropic Plates", Presented at 11th AIAA/ASME Structures, Structural Dynamics, and Materials Conference, Denver, CO, April 1970.

12. Brandmaier, H.E., "Optimum Filament Orientation Criteria", Journal of Composite Materials, Vol. 4, July 1970, pp. 422-425.

13. Verette, R.M., "Stiffness, Strength and Stability Optimization of Laminated Composites", Northrop Report No. 70-138, Northrop Corp., Aircraft D.V., Hawthorne, CA, Aug. 1970.

14. Mroz, A., "Optimal Design of Structures of Composite Materials", Int. J. of Solids and Structures, Vol. 6, 1970, pp. 859-870.

15. Verette, R.M., "Sandwich Panel Design Program (Spade)", Northrop Report NOR 71-85, Northrop Corp., Aircraft Div., Hawthorne, CA., May 1971.

16. Kicher, T.P., Chao, T.L., "Minimum Weight Design of Stiffened Fiber Composite Cylinders", Journal of Aircraft, Vol. 8, No. 7, July 1971, pp. 562-569.

17. Bryzgalin, G.I., "Optimal Design of Locally Orthotropic Elastic Flat Bodies with Weak Binding", Air Force Systems Command, Wright Patterson AFB, Ohio, Transl. into English from Inzh. Zh., Mekh. Iverd. Tela No. 3, 1971, pp. 169-175.

18. Vinson, J.R., Shore, S., "Minimum Weight Web-Core Sandwich Panels Subjected to Uniaxial Compression", Journal of Aircraft, Vol. 8, Nov., 1971, pp. 843-847.

19. Dharmarajan, S., McGhie, R.D., "Optimization of Composite Columns of Various Cross Sections", Proceedings of the 6th St. Louis Sym. on Composite Materials in Engineering Design, St. Louis, May 11-12, 1972, pp. 402-416.

20. Khot, N.S., Venkayya, V.B., Johnson, C.D., Tischler, V.A., "Optimum Design of Advanced Composite Structures for Static Loads", Proceedings of the 6th St. Louis Sym. on Composite Materials in Engineering Design, St. Louis, May 11-12, 1972, pp. 417-427.

21. Lowery, R.D., "Optimization of Orthotropic Layered Shells of Revolution by the Finite Element Method", SAWE Paper 939, 31st Annual Conf. of the SAWE, Inc., Atlanta, GA. May 22-25, 1972.

22. Harris, G. Z., Bartholomew, P., "Optimum Fibre-Reinforced Sheets for Two Alternate Loadings", RAE-TR-73012, Jan. 1973, Royal Aircraft Establishment, Farnborough (England).

23. Laakso, J.H., Zimmerman, D.K., "Synthesis of Compression Panels Having Non-Uniform Stiffener Sections", AIAA, ASME, and SAE, Structures, Structural Dynamics, and Materials Conference, 14th Williamsburg, VA., March 20-22, 1973, AIAA Paper 73-347.

24. Lai, Y.S., Achenbach, J.P., "Optimal Design of Layered Structures Under Dynamic Loading", Computers and Structures, Vol. 3, May 1973, pp. 559-572.

25. Khot, N.S., Venkayya, V.B., Johnson, C.D., Tischler, V.A., "Optimization of Fiber Reinforced Composite Structures", Int. J. of Solids and Structures, Vol. 9, Oct. 1973, pp. 1225-1236.

26. Patnaik, S., "Synthesis of Waffle Plates in the Post Buckled Domain", Computer Methods in Applied Mechanics and Engineering, Vol. 4, July 1974, pp. 47-68.

27. Khot, N.S., Venkayya, V.B., Berke, L., "Optimum Design of Composite Structures with Stress and Displacement Constraints", AIAA Paper 75-141, Presented at the AIAA 13th Aerospace Sciences Meeting, Pasadena, CA., Jan. 20-22, 1975.

28. Chao, C.C., Sun, C.T., Koh, S.L., "Strength Optimization for Cylindrical Shells of Laminated Composites", Journal of Composite Materials, Vol. 9, Jan. 1975, pp. 53-66.

29. McCullers, L.A., Lynch, R.W., "Composite Wing Design for Aeroelastic Requirements", Proceedings of the Conference on Fibrous Composites in Flight Vehicle Design, AFFDL-TR-72-130, U.S. Air Force, Sept. 1972, pp. 951-972.

30. McCullers, L.A., Lynch, R.W., "Dynamic Characteristics of Advanced Filamentary Composite Structures", Vol. II - Aeroelastic Synthesis Procedure Development, AFFDL-TR-73- Convair Aerospace Div. of General Dynamics - Fort Worth Operation March 1973.

31. Stroud, W.J., "Automated Structural Design with Aeroelastic Constraints: A Review and Assessment of the State of the Art", Presented at the ASME Sym. on Structural Optimization, 1974 ASME Winter Annual Meeting, New York, NY, Nov. 17-21, 1974.

32. Reuter, r. C., Jr., "Concise Property Transformation Relations for an Anisotropic Lamina", Journal of Composite Materials, April 1971, pp. 270-272.

33. Jones, R.M., Mechanics of Composite Materials, Scripta Book Co., Washington, D.C., 1975.

34. Lekhnitski, S.G., Theory of Elasticity of an Anisotropic Elastic Body, Holden-Day, San Francisco, 1963.

35. Tsai, S. W., "Strength Theories of Filamentary Structures", in R. T. Schwartz and H.S. Schwartz (eds.), Fundamental Aspects of

Fiber Reinforced Plastic Composites, Wiley Interscience, New York, 1968, pp. 3-11.

36. Tsai, S.W., Wu, E.M., "A General Theory of Strength for Anisotropic Materials", Journal of Composite Materials, January, 1971, pp. 58-80.

37. Hague, D.S., Glatt, C.R., "An Introduction to Multivariable Search Techniques for Parameter Optimization (and Program AESOP)", NASA CR-73200, April 1968.

38. Hague, D.S., Glatt, C.R., "A Guide to the Automated Engineering and Scientific Optimization Program - AESOP", NASA CR 73201, June 1968.

APPENDIX TABLE A.1 LAMAES USER'S GUIDE

A.1 LAMAES USER'S GUIDE

LAMAES is the name chosen for the total design-analysis program, consisting of the laminate analysis program coupled with the optimization program, AESOP.

The LAMAES program is set up to be used in two basic modes, either analysis or design. This description is divided into three parts; first information general to both modes, second specifics of the analysis mode, and third specifics of the design mode.

A.1.1 GENERAL

General data for any computer run,

CARD 1 format I5

NUMCAS - number of problems to be run, maximum of 10

CARD 2 format 10I5

IOPSHN (10) - case mode selection

0 analysis

1 design

Sets of problem data

CARD 3 format 20A4

TITLE (20) - title of case

CARD 4 format 11I5

1. LAMATE - Computation level selection

0 laminate

1 lamina

2. ISIGEP - lamina input selection

   0 stresses given, strains computed

   1 strains given, stresses computed

3. ISTRFR - laminate input selection

   1 strains and curvatures given, forces and moments computed

   2 forces and moments given, strains and curvatures computed

4. ISYMM - symmetry computation selection

   0 symmetric laminate

   1 asymmetric laminate

5. IECON - engineering constants computation selection

	LAMATE = 0	LAMATE = 1
0	none	none
1	laminate only	-
2	lamina and laminate	lamina only

6. NREPT - not used at this time

7. LAMX - force, moment, strain & curvature computation selection

   0 none

   1 all

   2 R - curing thermal loading effects

   3 E - operating thermal loading effects

   note: mechanical effect computed automatically

8. LAMY - lamina stresses and strains x,y coordinate system computation selection

   0 none

   1 all

   2 M - mechanical loading effects

   3 R

   4 E

   5 M & R

   6 M & E

   7 R & E

9. LAMZ - lamina stresses and strains 1,2 coordinate system computation selection

   0 none

   1 all

   2 M

   3 R

   4 E

   5 M & R

   6 M & E

   7 R & E

10. MAXLAY - option allowing doubling of laminate size

   -1 number of plies remains unchanged

   0 doubles the number of plies symmetrically

11. NOPTYP - type of design method option

   -1 no strength criteria considered, angles

REPRODUCIBILITY OF THE
ORIGINAL PAGE IS POOR

variable, number of plies constant

0 strength criteria considered, angles variable, number of plies constant

1 strength criteria considered, number of plies variable, for constant ply angle

note: an initial design must be supplied for NOPTYP = -1, other options result in the automatic determination of an initial design (may be unidirectional)

CARD 5 format 7I5

1. IOUTA - material property and layup print option
   - 1 no printing
   - 0 printing
2. IOUTB - lamina stiffness print option
   - 1 no printing
   - 0 printing
3. IOUTC - laminate stiffness print option
   - 1 no printing
   - 0 printing
4. IOUTD - engineering constants print option
   - 1 no printing
   - 2 printing
5. IOUTX - force, moment, strain & curvature*
6. IOUTY - lamina stress and strain in x,y coordinate

system print option*

7. IOUT Z - lamina stress and strain in 1,2 coordinate system print option

*note: IOUTX, IOUTY and IOUTZ have the same combinations, abbreviations were previously defined.

0 none

1 all

2 M

3 R

4 E

5 G - total or gross effect

6 M & R

7 M & E

8 M & G

9 R & E

10 R & G

11 E & G

12 M, R & E

13 M, R & G

14 M, E & G

15 R, E & G

CARD 6 format 2I5, 2 F10.0

NUMLAY - number of plies, maximum 30

NUMMAT - number of different materials, maximum 30

TEMCHG - temperature change, ambient to operating

DELT 3 - temperature change, cure to ambient

CARD 7, 8, ... format 7P10.3/5D10.3

ELP (7, NUMMAT) - lamina material properties

ELP (1, -) - elastic modulus E_1

ELP (2, -) - elastic modulus E_2

ELP (3, -) - shear modulus G_{12}

ELP (4, -) - coefficient thermal expansion, α_1

ELP (5, -) - coefficient thermal expansion, α_2

ELP (6, -) - Poisson's ratio ν_{12}

ELP (7, -) - ply thickness

ELPP (5, NUMMAT) - lamina ultimate strength parameters

ELPP (1, -) - tension ultimate X_T

ELPP (2, -) - compression ultimate X_C

ELPP (3, -) - tension ultimate Y_T

ELPP (4, -) - compression ultimate Y_C

ELPP (5, -) - shear ultimate Z

note: there should be 2 cards for each different material, 1st card material property and 2nd card strength parameters.

CARD 9, ... format 8 (I5,F5.0) see note

MATER (NUMLAY) - material type

THETA (NUMLAY) - orientation angle

note: 4 plys per card

CARD 10 format 6D12.5

Loads given

EPSIL (3, 1) for ISIGEP = 1

or

SIGMA (3, 1) for ISIGEP = 0

} for LAMATE = 1

or

AMDST (3)

and for ISTRFR = 1

AMDCR (3)

or

FORCE (3)

} for LAMATE = 0

and for ISTRFR = 2

AMOMN (3)

A.1.2. ANALYSIS

This section deals with specifics of the analysis mode which may require various combinations of data values.

CARD 4

Use ISIGEP only if LAMATE = 1

Use ISTRFR only if LAMATE = 0

Use ISYMM only if LAMATE = 0

If thermal effects are desired in LAMY then LAMX must be compatible, likewise LAMZ must be compatible with LAMY.

Use MAXLAY only if LAMATE = 0, NOPTYP does not apply.

CARD 5

All print options must be compatible with computations or zero's will result.

CARD 6

Must supply for analysis.

CARD 9

Must supply for analysis.

CARD 10

Must supply for analysis.

A.1.3 DESIGN

This section deals with specifics of the design mode which may require various combinations of data values.

CARD 4

LAMATE = 0

ISIGEP does not apply

ISYMM must be compatible with MAXLAY

IECON = 1 or 2

LAMX = 1

LAMY = 1

LAMZ = 1

CARD 6

NUMLAY = 1 or greater even if design is determined internally.

CARD 9

Must supply for design (1 or greater)

CARD 10

Must supply for design.

With each set of case data, the control input for the optimization procedure must be input. This is the form of FORTRAN NAMELIST type input data. NAMELIST input must be preceded by a card denoting the start of the NAMELIST input.

& IAESOP - denotes NAMELIST input to follow, begins in column 2.

NUMOPT - , - number of optimization searches to be employed.

METHOP (20) = , - sequence of searches to be employed

1 Sectioning

2 Pattern

3 Magnify

4 Steepest Descent

5 Creeping

6 Quadratic

7 Davidon

8 Random Point

9 Random Ray

MAXJJJ = , -- maximum number function evaluations

NALPHA = , - number of control parameters to be employed

ALPHA (100) = , - nominal values of control parameters

ALPHI (100) = , - upper control parameter search limits

ALPLO (100) = , - lower control parameter search limits

NFUNC = , - number of functions to be considered

NUMPSI = , - number of constraints, maximum of 20

NPSI (20) = , - constraint function numbers

2 elastic modulus E_x direction

3 elastic modulus E_y direction

4 shear modulus G_{xy} direction

5 Poisson's ratio ν_{xy} direction

6 coefficient of thermal expansion α_x direction

7 coefficient of thermal expansion α_y direction

8-21 ply failure, set internally

IPRTAL = , - detailed print option for optimization output

0 no print output

1 print output for design variables, and constraint and objective functions, and evaluation number.

note: many more control variables may be set, to obtain more detailed documentation on the control variables see [38].

& END

& IAESOP

EOF = .TRUE.,

& END

This last card ends one complete set of data for a problem, if more problems are run then a complete set of data for each would follow.

It may also be noted that the NAMELIST input for a design mode problem will override the same input data given in the general data section.

A flowchart (Fig. A.1) describing the basic program branching will follow.

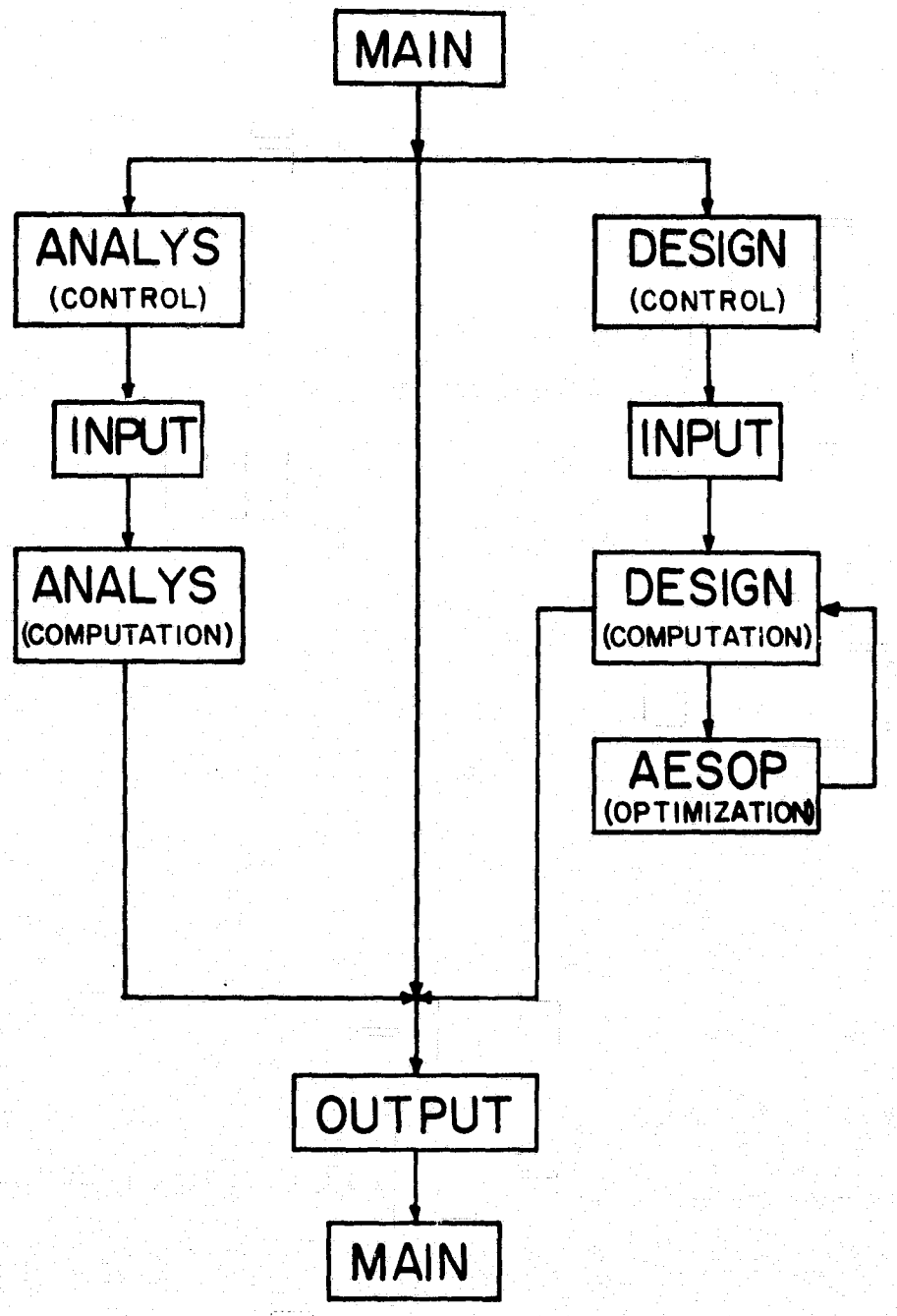

FIGURE AI. LAMAES FLOWCHART

APPENDIX TABLE A.2 LAMAES EXAMPLES

Example Input

```
    1     NUMBER OF CASES
    1
TEST PROBLEM TITANIUM ************************************************************
    0     2     0     1     0     1     1     1     0    -1
    0     1     1     0     5     5     5
    1     1     0     0     1     1
    2     1       100.      -200.
      .3D8      .27D7      .93D6     .25D-5    .131D-4        .21       .0052
    .188D6    -.36206      .91D4     -.45D5     .192D5
    1   0.     1   0.
      .144D4      .144D4      .102D4
 &IAESOP
  NFUNC=5,
  NALPHA=2,
  ALPHA=100*0.,
  IPRTAL=0,
  NUMOPT=7,
  METHOP=8,5,2,4,3,1,7,13*0,
  MAXJJJ=300,
  NUMPSI=4,
  ALPHI=100*90.,
  ALPLO=100*-90.,
  SIBAR=1.58,1.58,4.8,4.8,16*.8,
  PSIWT=20*10000.,
  FTOL=20*.1,
  TTOL=20*1.,
  MAXCRP=5,
  III=934053127,
  MAXRPT=100,
  CREPMN=100*1.,
  DCREEP=100*1.,
  IPMANL=0,
 &END
 &IAESOP
  EOF=.TRUE.,
 &END
```

Example Output

```
*************************TEST PROBLEM TITANIUM ***************************************************************************

DESIGN OPTION

     PLY ANGLES PERTURBED - NO STRENGTH CRITERIA

     MATERIAL PROPERTIES CONSTRAINED
          LONGITUDINAL X MODULUS
          TRANSVERSE Y MODULUS
          THERMAL EXPANSION COEF X
          THERMAL EXPANSION COEF Y


GENERAL COMPUTATION OPTIONS

     NUMBER OF LAYERS    2

     NUMBER OF MATERIALS    1

     TEMPERATURE CHANGE - AMBIENT TO OPERATING 100.

     TEMPERATURE CHANGE - CURE TO AMBIENT -200.

     ANALYSIS LEVEL - LAMINATE , SYMMETRIC

     FORCES AND MOMENTS GIVEN - MIDPLANE STRAINS AND CURVATURES COMPUTED


OUTPUT OPTIONS
          LAMX= 1
          LAMY= 1
          LAMZ= 1
          IOUTA= 0
          IOUTB= 1
          IOUTC= 1
          IOUTD= 0
```

```
                                        INITIAL REPORT
ALPHA VALUES
 0.00000      0.00000
FUNCTION VALUES
  18246.      3.0000      0.27000      2.5000      13.100      0.67407E 06

                                        **** GAIN ****
        METHOD =   8   OLD PHI =  0.674071E 06    NEW PHI =  0.148282E 05    PERCENT GAIN =    97.80017    JJJ =   2
ALPHA  = -0.28056E 02-0.62959E 02
FUNCTN =  0.22054E 04 0.91197E 00 0.91197E 00 0.35235E 01 0.35235E 01 0.14828E 05

* * * * * * * * * * * * * * * * * * * * * * * * END OF SEARCH  8    CYCLE NO.   1    JJJ =   101    * * * * * * * * *
        PHI AT START OF SEARCH =  0.674071E 06      PHI AT END OF SEARCH =  0.148282E 05    PERCENT GAIN =    97.80017
* * * * * * * * * * * * * * * * * * * * * * * * * * * * * * * * * * * * * * * * * * * * * * * * * * * * * * * * * * * * * * * *

* * * * * * * * * * * * * * * * * * * * * * * * END OF SEARCH  5    CYCLE NO.   1    JJJ =   114    * * * * * * * * *
        PHI AT START OF SEARCH =  0.298165E 05      PHI AT END OF SEARCH =  0.268291E 05    PERCENT GAIN =    10.01926
* * * * * * * * * * * * * * * * * * * * * * * * * * * * * * * * * * * * * * * * * * * * * * * * * * * * * * * * * * * * * * * *

* * * * * * * * * * * * * * * * * * * * * * * * END OF SEARCH  2    CYCLE NO.   1    JJJ =   115    * * * * * * * * *
        PHI AT START OF SEARCH =  0.268291E 05      PHI AT END OF SEARCH =  0.268291E 05    PERCENT GAIN =     0.00000
* * * * * * * * * * * * * * * * * * * * * * * * * * * * * * * * * * * * * * * * * * * * * * * * * * * * * * * * * * * * * * * *

* * * * * * * * * * * * * * * * * * * * * * * * END OF SEARCH  4    CYCLE NO.   1    JJJ =   138    * * * * * * * * *
        PHI AT START OF SEARCH =  0.515871E 05      PHI AT END OF SEARCH =  0.513855E 05    PERCENT GAIN =     0.39072
* * * * * * * * * * * * * * * * * * * * * * * * * * * * * * * * * * * * * * * * * * * * * * * * * * * * * * * * * * * * * * * *
```

```
* * * * * * * * * * * * * * * * * * * * * * * * * END OF SEARCH  4     CYCLE NO.   2     JJJ =   245     * * * * * * * * *
        PHI AT START OF SEARCH =  0.309066E 07      PHI AT END OF SEARCH =  0.309066E 07     PERCENT GAIN =      0.00000
* * * * * * * * * * * * * * * * * * * * * * * * * * * * * * * * * * * * * * * * * * * * * * * * * * * * * * * * * * * * * * * *


* * * * * * * * * * * * * * * * * * * * * * * * * END OF SEARCH  3     CYCLE NO.   2     JJJ =   248     * * * * * * * * *
        PHI AT START OF SEARCH =  0.617753E 07      PHI AT END OF SEARCH =  0.617753E 07     PERCENT GAIN =      0.00000
* * * * * * * * * * * * * * * * * * * * * * * * * * * * * * * * * * * * * * * * * * * * * * * * * * * * * * * * * * * * * * * *


* * * * * * * * * * * * * * * * * * * * * * * * * END OF SEARCH  1     CYCLE NO.   2     JJJ =   292     * * * * * * * * *
        PHI AT START OF SEARCH =  0.123513E 08      PHI AT END OF SEARCH =  0.123513E 08     PERCENT GAIN =      0.00000
* * * * * * * * * * * * * * * * * * * * * * * * * * * * * * * * * * * * * * * * * * * * * * * * * * * * * * * * * * * * * * * *


                                                    **** GAIN ****
        METHOD =   7   OLD PHI =  0.246987E 08     NEW PHI =  0.246987E 08     PERCENT GAIN =      0.00000     JJJ =  296
ALPHA  = -0.17485E 02-0.73274E 02
FUNCTN =  0.29101E 04 0.13695E 01 0.13695E 01 0.35235E 01 0.35235E 01 0.24699E 08

                                                    **** GAIN ****
        METHOD =   7   OLD PHI =  0.246987E 08     NEW PHI =  0.246987E 08     PERCENT GAIN =      0.00000     JJJ =  297
ALPHA  = -0.17485E 02-0.73269E 02
FUNCTN =  0.29101E 04 0.13695E 01 0.13695E 01 0.35235E 01 0.35235E 01 0.24699E 08

                                                    **** GAIN ****
        METHOD =   7   OLD PHI =  0.246987E 08     NEW PHI =  0.246987E 08     PERCENT GAIN =      0.00000     JJJ =  298
ALPHA  = -0.17485E 02-0.73269E 02
```

REPRODUCIBILITY OF THE ORIGINAL PAGE IS POOR

```
* * * * * * * * * * * * * * * * * * * * * * * * * END OF SEARCH  3     CYCLE NO.   1     JJJ =   141     * * * * * * * * *
        PHI AT START OF SEARCH =  0.998328E 05       PHI AT END OF SEARCH =  0.998328E 05     PERCENT GAIN =      0.00000
* * * * * * * * * * * * * * * * * * * * * * * * * * * * * * * * * * * * * * * * * * * * * * * * * * * * * * * * * * * * * * * *


* * * * * * * * * * * * * * * * * * * * * * * * * END OF SEARCH  1     CYCLE NO.   1     JJJ =   194     * * * * * * * * *
        PHI AT START OF SEARCH =  0.196343E 06       PHI AT END OF SEARCH =  0.196203E 06     PERCENT GAIN =      0.07124
* * * * * * * * * * * * * * * * * * * * * * * * * * * * * * * * * * * * * * * * * * * * * * * * * * * * * * * * * * * * * * * *

*********************************** DAVIDON SEARCH FAILED TO GAIN***************************************

* * * * * * * * * * * * * * * * * * * * * * * * * END OF SEARCH  7     CYCLE NO.   1     JJJ =   208     * * * * * * * * *
        PHI AT START OF SEARCH =  0.389590E 06       PHI AT END OF SEARCH =  0.389590E 06     PERCENT GAIN =      0.00000
* * * * * * * * * * * * * * * * * * * * * * * * * * * * * * * * * * * * * * * * * * * * * * * * * * * * * * * * * * * * * * * *


* * * * * * * * * * * * * * * * * * * * * * * * * END OF SEARCH  8     CYCLE NO.   2     JJJ =   208     * * * * * * * * *
        PHI AT START OF SEARCH =  0.776424E 06       PHI AT END OF SEARCH =  0.389590E 06     PERCENT GAIN =     49.82253
* * * * * * * * * * * * * * * * * * * * * * * * * * * * * * * * * * * * * * * * * * * * * * * * * * * * * * * * * * * * * * * *


* * * * * * * * * * * * * * * * * * * * * * * * * END OF SEARCH  5     CYCLE NO.   2     JJJ =   226     * * * * * * * * *
        PHI AT START OF SEARCH =  0.154851E 07       PHI AT END OF SEARCH =  0.154722E 07     PERCENT GAIN =      0.08298
* * * * * * * * * * * * * * * * * * * * * * * * * * * * * * * * * * * * * * * * * * * * * * * * * * * * * * * * * * * * * * * *


* * * * * * * * * * * * * * * * * * * * * * * * * END OF SEARCH  2     CYCLE NO.   2     JJJ =   227     * * * * * * * * *
        PHI AT START OF SEARCH =  0.154722E 07       PHI AT END OF SEARCH =  0.154722E 07     PERCENT GAIN =      0.00000
* * * * * * * * * * * * * * * * * * * * * * * * * * * * * * * * * * * * * * * * * * * * * * * * * * * * * * * * * * * * * * * *
```

```
                                                    **** GAIN ****

        METHOD =   7   OLD PHI =  0.246987E 08     NEW PHI =  0.246987E 08     PERCENT GAIN =      0.00000     JJJ =  299

ALPHA  = -0.17485E 02-0.73269E 02

FUNCTN =  0.29101E 04 0.13695E 01 0.13695E 01 0.35235E 01 0.35235E 01 0.24699E 08


                                                    **** GAIN ****

        METHOD =   7   OLD PHI =  0.246987E 08     NEW PHI =  0.246987E 08     PERCENT GAIN =      0.00000     JJJ =  300

ALPHA  = -0.17485E 02-0.73269E 02

FUNCTN =  0.29101E 04 0.13695E 01 0.13695E 01 0.35235E 01 0.35235E 01 0.24699E 08


                                                    **** GAIN ****

        METHOD =   7   OLD PHI =  0.246987E 08     NEW PHI =  0.246987E 08     PERCENT GAIN =      0.00000     JJJ =  301

ALPHA  = -0.17485E 02-0.73269E 02

FUNCTN =  0.29101E 04 0.13695E 01 0.13695E 01 0.35235E 01 0.35235E 01 0.24699E 08


                                                    FINAL REPORT                                  JJJ =   301

ALPHA VALUES
 -17.485      -73.269
FUNCTION VALUES
  2910.1       1.3695       1.3695       3.5235       3.5235       0.24699E 08
```

```
*************************TEST PROBLEM TITANIUM ***************************************************************************

DESIGN OPTION

     PLY ANGLES PERTURBED - NO STRENGTH CRITERIA

     MATERIAL PROPERTIES CONSTRAINED
          LONGITUDINAL X MODULUS
          TRANSVERSE Y MODULUS
          THERMAL EXPANSION COEF X
          THERMAL EXPANSION COEF Y


GENERAL COMPUTATION OPTIONS

     NUMBER OF LAYERS     8

     NUMBER OF MATERIALS     1

     TEMPERATURE CHANGE - AMBIENT TO OPERATING 100.

     TEMPERATURE CHANGE - CURE TO AMBIENT -200.

     ANALYSIS LEVEL - LAMINATE , SYMMETRIC

     NUMBER OF LAYERS INPUT - DOUBLED

     FORCES AND MOMENTS GIVEN - MIDPLANE STRAINS AND CURVATURES COMPUTED


OUTPUT OPTIONS
          LAMX= 1
          LAMY= 1
          LAMZ= 1
          IOUTA= 0
          IOUTB= 1
          IOUTC= 1
          IOUTD= 0
```

LAYER NUMBER	MATERIAL NUMBER	LAYER OREINTATION
1	1	-17.
2	1	17.
3	1	-73.
4	1	73.
5	1	73.
6	1	-73.
7	1	17.
8	1	-17.

MATERIAL PROPERTIES

MATERIAL NUMBER	LONGITUDINAL MODULUS	TRANSVERSE MODULUS	SHEAR MODULUS	POISSON RATIO LONG - TRAN	POISSON RATIO TRAN - LONG	THERMAL EXP COEF - LONG	THERMAL EXP COEF - TRAN	THICKNESS
1	0.30000 08	0.27000 07	0.93000 06	0.21000 00	0.1890D-01	0.25000-05	0.13100-04	0.5200D-02

MATER NUMBER	LONGITUDINAL TENSION STRENGTH	LONGITUDINAL COMPRESSION STRENGTH	TRANSVERSE TENSION STRENGTH	TRANSVERSE COMPRESSION STRENGTH	SHEAR STRENGTH
1	0.1880D 06	-0.3620D 06	0.9100D 04	-0.4500D 05	0.1920D 05

LAMINA COEFFICIENT OF THERMAL EXPANSION - X,Y,Z DIRECTION

LAYER NUMBER	ALPHA X	ALPHA Y	ALPHA XY
1	0.34061010-05	0.12193900-04	0.59274450-05
2	0.34061010-05	0.12193900-04	-0.59274450-05
3	0.12193900-04	0.34061010-05	0.59274450-05
4	0.12193900-04	0.34061010-05	-0.59274450-05
5	0.12193900-04	0.34061010-05	-0.59274450-05
6	0.12193900-04	0.34061010-05	0.59274450-05
7	0.34061010-05	0.12193900-04	-0.59274450-05
8	0.34061010-05	0.12193900-04	0.59274450-05

LAMINATE COEFFICIENT OF THERMAL EXPANSION - X,Y,Z DIRECTION

ALPHA X	ALPHA Y	ALPHA XY
0.35235330-05	0.35235330-05	0.00000000 00

COMPUTED LAMINATE ENGINEERING CONSTANTS

LONGITUDINAL X MODULUS	TRANSVERSE Y MODULUS	SHEAR XY MODULUS	POISSON XY RATIO	POISSON YX RATIO	CROSS COEF XY - X	CROSS COEF XY - Y	CROSS COEF X - XY	CROSS COEF Y - XY
0.13690 08	0.13690 08	0.31170 07	0.19370 00	0.19370 00	0.00000 00	0.00000 00	0.00000 00	0.00000 00

TOTAL LAMINATE FORCES AND DISPLACEMENTS

FORCE X	FORCE Y	FORCE XY	MOMENT X	MOMENT Y	MOMENT XY
0.11912440 04	0.11910440 04	0.10200000 04	0.00000000 00	0.00000000 00	0.00000000 00

STRAIN X	STRAIN Y	STRAIN XY	CURVATURE X	CURVATURE Y	CURVATURE XY
0.16857150-02	0.16857150-02	0.78671210-02	0.00000000 00	0.00000000 00	0.00000000 00

TOTAL LAMINA STRESSES AND STRAINS - X,Y,Z DIRECTION

LAYER NUMBER	SIGMA X	SIGMA Y	TAU XY	EPSILON X	EPSILON Y	GAMMA XY
1	0.18312770 02	0.89235650 04	0.10319760 05	0.23669350-02	0.41244950-02	0.90526100-02
2	0.11131560 06	0.18204030 05	0.38718700 05	0.23669350-02	0.41244950-02	0.66816320-02
3	0.89235650 04	0.18312770 02	0.10319760 05	0.41244950-02	0.23669350-02	0.90526100-02
4	0.18204030 05	0.11131560 06	0.38718700 05	0.41244950-02	0.23669350-02	0.66816320-02
5	0.18204030 05	0.11131560 06	0.38718700 05	0.41244950-02	0.23669350-02	0.66816320-02
6	0.89235650 04	0.18312770 02	0.10319760 05	0.41244950-02	0.23669350-02	0.90526100-02
7	0.11131560 06	0.18204030 05	0.38718700 05	0.23669350-02	0.41244950-02	0.66816320-02
8	0.18312770 02	0.89235650 04	0.10319760 05	0.23669350-02	0.41244950-02	0.90526100-02

TOTAL LAMINA STRESSES AND STRAINS - 1,2,3 DIRECTION

LAYER NUMBER	SIGMA 1	SIGMA 2	TAU 12	EPSILON 1	EPSILON 2	GAMMA 12
1	-0.49911900 04	0.13933070 05	0.60655890 04	-0.13904490-04	0.65053340-02	0.65221390-02
2	0.12500760 06	0.45121010 04	0.60655890 04	0.43853340-02	0.21060960-02	0.65221390-02
3	-0.49911900 04	0.13933070 05	-0.60655890 04	-0.13904490-04	0.65053340-02	-0.65221390-02
4	0.12500760 06	0.45121010 04	-0.60655890 04	0.43853340-02	0.21060960-02	-0.65221390-02
5	0.12500760 06	0.45121010 04	-0.60655890 04	0.43853340-02	0.21060960-02	-0.65221390-02
6	-0.49911900 04	0.13933070 05	-0.60655890 04	-0.13904490-04	0.65053340-02	-0.65221390-02
7	0.12500760 06	0.45121010 04	0.60655890 04	0.43853340-02	0.21060960-02	0.65221390-02
8	-0.49911900 04	0.13933070 05	0.60655890 04	-0.13904490-04	0.65053340-02	0.65221390-02

STRAIN ENERGY = 0.2913129E 04

STRENGTH CRITERIA

LAYER NUMBER	PLY FAILURE OCCURS IF >1
1	2.44481
2	0.77183
3	2.44481
4	0.77183
5	0.77183
6	2.44481
7	0.77183
8	2.44481

APPENDIX TABLE A.3 LAMAES LISTING

A list of the program is available on request from either author.