General Disclaimer

One or more of the Following Statements may affect this Document

- This document has been reproduced from the best copy furnished by the organizational source. It is being released in the interest of making available as much information as possible.

- This document may contain data, which exceeds the sheet parameters. It was furnished in this condition by the organizational source and is the best copy available.

- This document may contain tone-on-tone or color graphs, charts and/or pictures, which have been reproduced in black and white.

- This document is paginated as submitted by the original source.

- Portions of this document are not fully legible due to the historical nature of some of the material. However, it is the best reproduction available from the original submission.

Produced by the NASA Center for Aerospace Information (CASI)

BUILDING RESEARCH ADVISORY BOARD

Federal Construction Council

Technical Report No. 66

(NASA-CR-148514) CRITERIA FOR UNDERGROUND HEAT DISTRIBUTION SYSTEMS (National Academy of Sciences - National Research) 87 p HC $5.00 CSCL 20M

N76-28511

Unclas

G3/34 15203

CRITERIA FOR UNDERGROUND HEAT DISTRIBUTION SYSTEMS

National Academy of Sciences

CRITERIA FOR UNDERGROUND HEAT DISTRIBUTION SYSTEMS

Technical Report No. 66

Prepared by the
Standing Committee on Mechanical Engineering
of the
Federal Construction Council
Building Research Advisory Board
National Research Council

NATIONAL ACADEMY OF SCIENCES
Washington, D.C.
1975

NOTICE: The program under which the project reported was conducted was approved by the Governing Board of the National Research Council, acting on behalf of the National Academy of Sciences. Such approval reflects the Board's judgment that the program is of national importance and appropriate with respect to both the purposes and resources of the National Research Council.

The members of the Committee selected to undertake this project and prepare this report were chosen for recognized scholarly competence and with due consideration for the balance of disciplines appropriate to the project. Responsibility for the detailed aspects of this report rests with that Committee.

Each report issuing from a study committee of the National Research Council is reviewed by an independent group of qualified individuals according to procedures established and monitored by the Report Review Committee of the National Academy of Sciences. Distribution of this report is approved, by the President of the Academy, upon satisfactory completion of the review process.

This report was prepared under the following contracts between the National Academy of Sciences and the supporting federal agencies: Atomic Energy Commission, WA-73-3061; Department of the Army, DACA 73-73-C-0004; Department of Health, Education, and Welfare, OS-73-116; National Aeronautics and Space Administration, NASW-2461; Department of the Navy, N00025-73-C-0024; Department of Commerce, 3-35819; General Services Administration, GS-00-B-871; Veterans Administration, V1001P-290; Department of the Interior, 13-D-2501.

By supporting contract agreement, federal agencies wishing copies of this report are entitled to such copies on request to: Building Research Advisory Board, National Research Council, Washington, D.C. 20418.

Inquiries concerning this publication should be addressed to: The Executive Director, Building Research Advisory Board, National Research Council, 2101 Constitution Avenue, N.W., Washington, D.C. 20418.

Library of Congress Catalog Card No. 74-32581
International Standard Book No. 0-309-02320-3

Available from

Printing and Publishing Office, National Academy of Sciences, 2101 Constitution Avenue, N.W., Washington, D.C. 20418.

Printed in the United States of America

FEDERAL CONSTRUCTION COUNCIL
of the
BUILDING RESEARCH ADVISORY BOARD

The Federal Construction Council serves as a planning, coordinating, and operating body to encourage continuing cooperation among federal agencies in advancing the science and technology of building as related to federal construction activities.

In this pursuit, its specific objectives include: assembly and correlation of available knowledge and experience from each of the agencies; elimination of undesirable duplication in investigative effort on common problems; free discussion among scientific and technical personnel, both within and outside the government, on selected building problems; objective resolution of technical problems of particular concern to the federal construction agencies; and appropriate distribution of resulting information.

The Council as such comprises ten members appointed by the BRAB Chairman from among BRAB membership, plus one member from the senior professional staff of each of the supporting federal agencies (currently nine), also appointed by the BRAB Chairman on nomination from the individual agencies; all appointments are subject to approval by the President of the National Academy of Sciences.

The Council directs the conduct of technical investigations and surveys of practice, holds symposia/workshops, and arranges for interchanges of information and for monitoring of research and technical projects.

FEDERAL CONSTRUCTION COUNCIL–1973–1974

Chairman

Walter S. Douglas, *Senior Partner**
Parsons, Brinckerhoff, Quade and Douglas
New York, New York

James M. Bayne, *Director*, Programs and Engineering Division, National Aeronautics and Space Administration, Washington, D.C.
Robert W. Blake, *Chief*, Research and Development Staff, Office of Facilities, Engineering, and Property Management, Department of Health, Education, and Welfare, Washington, D.C.
Richard T. Geoghegan, Darien, Connecticut
Robert A. Georgine, *Secretary Treasurer*, Building and Construction Trades Department, American Federation of Labor–Congress of Industrial Organizations, Washington, D.C.
Charles P. Graves, *Professor*, College of Architecture, University of Kentucky, Lexington, Kentucky
*Walter R. Hibbard, Jr., *Vice President–Technical Services*, Owens-Corning Fiberglas Corporation, Toledo, Ohio
Samuel Kramer, *Chief*, Office of Federal Building Technology, Center for Building Technology, National Bureau of Standards, Washington, D.C.
Edwin B. Mixon, *Deputy Chief of Engineering Division*, Directorate of Civil Engineering, Department of the Air Force, Washington, D.C.
Nyal E. Nelson, *Chief*, Specifications and Estimating Branch, Office of the Chief of Engineers, Department of the Army, Washington, D.C.
Robert D. Pauley, *Vice President–Research and Engineering*, Weyerhaeuser Company, Tacoma, Washington
Tom Lewis Peyton, Jr., *Deputy Assistant Commissioner for Construction Management*, Public Buildings Service, General Services Administration, Washington, D.C.
Blake J. Ratliff, *Director*, Research Staff, Office of Construction, Veterans Administration, Washington, D.C.
Joseph A. Rorick, *Director of Design and Engineering*, Real Estate and Construction Division, IBM Corporation, White Plains, New York
John F. C. Turner, *Lecturer*, Department of Urban Studies and Planning, Massachusetts Institute of Technology, Cambridge, Massachusetts
Richard H. Welles, *Director*, Specifications and Cost Division, Naval Facilities Engineering Command, Department of the Navy, Alexandria, Virginia
Beverly A. Willis, AIA, Willis & Associates, San Francisco, California
Charles I. York, *Assistant Director for Engineering*, Division of Construction, United States Atomic Energy Commission, Washington, D.C.
Joseph H. Zettel, *Vice President, Director of Research*, Industrial Products Research Department, Research and Development Center, Johns-Manville Products Corporation, Denver, Colorado

---

*Member, National Academy of Engineering.

FEDERAL CONSTRUCTION COUNCIL
STANDING COMMITTEE ON MECHANICAL ENGINEERING

While the Federal Construction Council itself has overall responsibility for its technical programs, specific projects such as the one reported here are carried out under the direction of appointed task groups or standing committees of engineers, architects, and scientists. Each member, so appointed, serves as a specialist in his field or as a generalist in the problem area, not as a spokesman for or representative of his own agency or any other organization with which he may be associated.

This project was assigned to the Standing Committee on Mechanical Engineering, the members of which are listed below.

Hugh B. Bauer, Mechanical Engineering Section, Facilities Engineering Division, National Aeronautics and Space Administration
William Duncan, Division of Engineering, Department of Health, Education, and Welfare
*William Goins, Directorate of Civil Engineering, Department of the Air Force
*Floyd C. Hildebrand, Steam Power Plants, Naval Facilities Engineering Command, Department of the Navy
Hal Ingram, Directorate of Civil Engineering, Department of the Air Force
*Lee V. Irvin, Mechanical Specifications Branch, Naval Facilities Engineering Command, Department of the Navy
George Kelly, Center for Building Technology, National Bureau of Standards
*Chin Fun Kwok, Mechanical Engineering Service, Office of Construction, Veterans Administration
*Mitchell J. Kulesza, Office of the Assistant Director for Engineering, Construction Division, Atomic Energy Commission
Harrison H. Maschke, Mechanical Section, Office of the Chief of Engineers, Department of the Army
William A. Schmidt, Research Staff, Office of Construction, Veterans Administration
Garth E. Summers, Office of Facilities, National Aeronautics and Space Administration
Roger L. Thompson, Utilities Engineering Branch, Naval Facilities Engineering Command, Department of the Navy

BRAB SUPPORTING STAFF

Henry A. Borger, *Program Manager*, Federal Construction Council
Claret M. Heider, *Editor*

*Served on subcommittee that developed the report. Also serving on the subcommittee as liaison members were Mr. Oscal J. Hessler of the General Services Administration, Mr. M. F. Moran of the Corps of Engineers, and Dr. T. Kusuda of the National Bureau of Standards.

FEDERAL CONSTRUCTION COUNCIL
STANDING COMMITTEE ON MECHANICAL ENGINEERING

While the Federal Construction Council itself has overall responsibility for its technical programs, specific projects such as the one reported here are carried out under the direction of appointed task groups or standing committees of engineers, architects, and scientists. Each member, so appointed, serves as a specialist in his field or as a generalist in the problem area, not as a spokesman for or representative of his own agency or any other organization with which he may be associated.

This project was assigned to the Standing Committee on Mechanical Engineering, the members of which are listed below.

Hugh B. Bauer, Mechanical Engineering Section, Facilities Engineering Division, National Aeronautics and Space Administration
William Duncan, Division of Engineering, Department of Health, Education, and Welfare
*William Goins, Directorate of Civil Engineering, Department of the Air Force
*Floyd C. Hildebrand, Steam Power Plants, Naval Facilities Engineering Command, Department of the Navy
Hal Ingram, Directorate of Civil Engineering, Department of the Air Force
*Lee V. Irvin, Mechanical Specifications Branch, Naval Facilities Engineering Command, Department of the Navy
George Kelly, Center for Building Technology, National Bureau of Standards
*Chin Fun Kwok, Mechanical Engineering Service, Office of Construction, Veterans Administration
*Mitchell J. Kulesza, Office of the Assistant Director for Engineering, Construction Division, Atomic Energy Commission
Harrison H. Maschke, Mechanical Section, Office of the Chief of Engineers, Department of the Army
William A. Schmidt, Research Staff, Office of Construction, Veterans Administration
Garth E. Summers, Office of Facilities, National Aeronautics and Space Administration
Roger L. Thompson, Utilities Engineering Branch, Naval Facilities Engineering Command, Department of the Navy

BRAB SUPPORTING STAFF

Henry A. Borger, *Program Manager*, Federal Construction Council
Claret M. Heider, *Editor*

*Served on subcommittee that developed the report. Also serving on the subcommittee as liaison members were Mr. Oscal J. Hessler of the General Services Administration, Mr. M. F. Moran of the Corps of Engineers, and Dr. T. Kusuda of the National Bureau of Standards.

FOREWORD

The Federal Construction Council (FCC) first became interested in the subject of underground heat distribution systems in the late 1950s when federal agencies began to experience numerous system failures--some in relatively new systems--requiring costly repairs or, occasionally, the complete replacement of a system. The FCC concluded that the basic problem was an almost total lack of design standards for such systems.

To correct this situation, the FCC prepared and published detailed criteria for the design and evaluation of underground heat distribution systems (FCC Technical Report No. 30R). Additional criteria relating to components of underground heat distribution systems also were prepared and published (FCC Technical Report No. 39). Two investigative reports on the subject subsequently were prepared (FCC technical reports Nos. 47 and 47S) as were the proceedings of a conference on underground heat distribution systems (FCC Symposium/Workshop Report No. 3) and revisions of the original criteria reports (FCC technical reports Nos. 30R-64 and 39-64. The criteria presented in these reports have been used extensively by government and nongovernment organizations, both here and abroad, and indications are that their use has contributed to a significant decrease in system failures.

In 1969, however, the FCC concluded that further updating of the criteria was in order because the criteria appeared to be too inflexible--requiring in some cases the installation of an unnecessarily expensive system and precluding in other cases the use of a system with essential special features--and were not applicable to several new promising system concepts. The FCC therefore requested its Standing Committee on Mechanical Engineering to review and revise, as appropriate, the underground heat distribution system criteria presented in FCC technical reports Nos. 30R-64 and 39-64. This report is the result of that effort.

This report has been reviewed and approved by the Federal Construction Council, and, on the recommendation of the Council, the Building Research Advisory Board (BRAB) has approved the report for publication. The Building Research Advisory Board gratefully acknowledges the work of the FCC Standing Committee on Mechanical Engineering in conducting the study and developing this report.

Herbert H. Swinburne, *Chairman*
Building Research Advisory Board

CONTENTS

		Page
I.	INTRODUCTION	1
	A. Purpose of Report	1
	B. Scope of Report	1
	C. Development of Report	1
	D. Organization of Report	2
II.	RECOMMENDATIONS	3
	A. General	3
	B. Project Design	4
	C. Guide Specifications	8
	D. Prequalification Program	9
	E. Prequalification Criteria	15
III.	DISCUSSION	25
	A. General	25
	B. Project Design	29
	C. Guide Specifications	35
	D. Prequalification Program	36
	E. Prequalification Criteria	37

APPENDICES

A.	Determination of Underground Water Conditions	49
B.	Procedure for Determining Thermal Insulation Requirements of Underground Heat Distribution Systems	52
C.	Guidelines for Determining and Reporting Conductance Factors for Underground Heat Distribution Systems	76

LIST OF TABLES

1.	Minimum Test Pressures for Pressure-Testable Conduit Assemblies	15
2.	Minimum Head of Water to Which Non-Pressure-Testable Conduits and Insulating-Envelope Assemblies Should be Subjected During Test	16

Page

3. Minimum Thickness of Insulation, to be Used in Manholes (inches) in Relation to Nominal Pipe Diameter and Dry Thermal Conductivity 23

4. Types of Systems Suitable for Use with Various Underground Water Conditions 42

I
INTRODUCTION

A. PURPOSE OF REPORT

The report presents up-to-date underground heat distribution system design and evaluation criteria that supersede those criteria presented in FCC technical reports Nos. 30R-64[1] and 39-64[2].

B. SCOPE OF REPORT

The report covers underground heat distribution systems (except walk-in tunnels[3]) used to convey fluids (usually steam or hot water) heated to from 180 °F to 450 °F between buildings.

C. DEVELOPMENT OF REPORT

In the course of developing this report, the FCC Standing Committee on Mechanical Engineering made four trips to various parts of the country to inspect operating underground heat distribution systems, especially the newer types. In most cases an inspection involved the excavation of the system at at least one point and the cutting open of the system to examine its interior. The Committee also met with representatives of various manufacturers to discuss the features and characteristics of different system types. The information and data obtained during these inspections and meetings and that available in previously published reports as well as the collective judgment and experience of the Committee served as the basis for this report.

---

[1]BRAB Federal Construction Council, Technical Report No. 30R-64, *Underground Heat Distribution Systems* (Washington, D.C.: National Academy of Sciences, 1964).

[2]BRAB Federal Construction Council, Technical Report No. 39-64, *Evaluation of Components for Underground Heat Distribution Systems* (Washington, D.C.: National Academy of Sciences, 1964).

[3]Exclusion does not indicate that walk-in tunnels are not acceptable.

D. ORGANIZATION OF REPORT

This report is composed of two major sections in addition to this Introduction: Recommendations, in which the Committee presents its general recommendations on the use of underground heat distribution systems and criteria on the application and evaluation of such systems; and Discussion, in which the Committee presents the data and rationale underlying its recommendations. Appendices describe test procedures and evaluative techniques that supplement the criteria.

II
RECOMMENDATIONS

A. GENERAL

In procuring underground heat distribution systems, agencies should use the systems approach[1], wherein a single organization is assigned broad responsibility for the design, fabrication, and installation of a relatively complex assemblage of components intended to function as a unit. In applying the systems approach to the procurement of underground heat distribution systems, agencies should require that the system supplier (ordinarily the manufacturer of one or more major elements of the system) assume responsibility[2] for:

1. Designing and fabricating or specifying all components required for the proper functioning of the system under the conditions in which it is intended to be used.

2. Selecting the proper set of components to be employed for a particular project to satisfy the general requirements set forth by the project designer in contract documents.

3. Ensuring that the components selected are fabricated and installed properly.

To ensure proper application of the systems approach, agencies should modify their design practices and manuals, procurement procedures, and guide specifications in accordance with the specific recommendations and criteria presented below.

---

[1]As explained in the discussion section of this report, the systems approach being proposed by the Committee is somewhat different from the systems approach used in the procurement of such facilities as schools.

[2]The assignment of broad responsibilities to the system supplier under the systems approach does not eliminate the role of the professional design engineer (i.e., an engineer in private practice or one employed by an agency who prepares contract documents) or, necessarily, of the installing contractor. Implementation of the systems approach, however, does modify the roles and relationships of the various participants in the design and construction process; the nature of the required changes are covered in detail in subsequent sections of the report.

B. PROJECT DESIGN

1. Qualifications of Design Organizations

The staff of any government design office or Architect/Engineer (A/E) firm selected by an agency to design an underground heat distribution system should include an individual experienced in working with such systems. The design organization also should be able to demonstrate that it can satisfactorily carry out its design responsibilities under the systems approach.

2. General Responsibilities of Design Organizations

In their instructions to design organizations, agencies should indicate that the project designer is responsible for performing, in accordance with the system design criteria presented in paragraph 3, the following work related to designing underground heat distribution systems and preparing contract documents for their installation:

a. Defining site conditions.

b. Determining the general layout and essential characteristics of the system.

c. Designing special elements of the system.

d. Reviewing the successful bidder's detailed plans for carrying out the project.

3. System Design Criteria

a. Defining Site Conditions

To permit a potential bidder on a project to determine whether the system he proposes to supply is generally suitable for the application and, if it is, what specific combination of system components must be supplied and what special precautions must be taken during installation, the project designer should include in contract documents the site condition information specified below. If conditions vary along the proposed path of the system, the project designer should define the conditions for each different segment of the system.

(1) Underground Water Condition Classification

The underground water conditions at a site should be classified as severe, bad, moderate, or mild on the basis of the following definitions:

(a) Severe--The water table is expected to be frequently above the bottom of the system or the water table is expected to be occasionally above the bottom of the

REPRODUCIBILITY OF THE ORIGINAL PAGE IS POOR

system and surface water is expected to accumulate and remain for long periods in the soil surrounding the system.

(b) Bad--The water table is expected to be occasionally above the bottom of the system and surface water is expected to accumulate and remain for short periods (or not at all) in the soil surrounding the system or the water table is expected never to be above the bottom of the system, but surface water is expected to accumulate and remain for long periods in the soil surrounding the system.

(c) Moderate--The water table is expected never to be above the bottom of the system, but surface water is expected to accumulate and remain for short periods in the soil surrounding the system.

(d) Mild--The water table is expected never to be above the bottom of the system and surface water is not expected to accumulate or remain in the soil surrounding the system.

If at all practicable, a soils engineer familiar with underground water conditions at the site should be employed to establish the classification. In the absence of more definitive information, the guidelines presented in appendix A should be used in making the determination. If the system to be installed is expected to be used for less than 10 years, consideration should be given to classifying the site one class lower than it ordinarily would be classified (e.g., bad rather than severe).

(2) Soil Corrosiveness Classification

The soil at a site should be classified as corrosive, mildly corrosive, or noncorrosive on the basis of the following criteria:

(a) Corrosive--The soil resistivity is less than 10,000 ohms per centimeter cube (ohm-cm) or stray direct currents can be detected underground; all sites classified as having severe water conditions should be classified as corrosive.

(b) Mildly Corrosive--The soil resistivity is 10,000 ohm-cm or greater but less than 30,000 ohm-cm and no stray direct currents can be detected underground.

(c) Noncorrosive--The soil resistivity is 30,000 ohm-cm or greater and no stray direct currents can be detected underground.

The classification should be made by an experienced corrosion engineer based on a field survey of the site carried out in accordance with recognized guidelines for conducting such surveys. The results of the field survey should be summarized in a report and submitted by the design organization to the contracting officer with contract documents.

(3) Soil pH

If there is any reason to suspect that the soil pH will be less than 5.0 anywhere along the proposed path of the system, pH measurements should be made at close intervals along the proposed route, and all locations in which the pH is less than 5.0 should be indicated in the contract documents. Soil pH should be determined by an experienced soils engineer, preferably the same engineer responsible for other soils engineering work.

(4) Soil Stability

The load-bearing qualities of the soil in which the system will be installed should be investigated by an experienced soils engineer, again preferably the same engineer responsible for other soils engineering work, and the location and nature of potential soils problems should be identified.

b. Determining the General Layout and Essential Characteristics of the System

Subject to the criteria presented below and in paragraph c, the project designer should indicate in contract documents: (1) the path that the system should follow; (2) the elevation of the system along the indicated path; (3) any natural or man-made obstacles that must be avoided; (4) the diameter of the carrier piping to be used in the various segments of the system; (5) the maximum permissible heat loss in the various segments; (6) the operating temperature classification of the system; (7) the manner in which water from manholes and conduit underdrains is to be disposed of; and (8) the location, type, and size/capacity of valves, traps, controls, and condensate pumps to be provided. If manholes, expansion/contraction devices, and piping anchors must be in a particular location and/or of a particular size for the system to function properly, the project designer should indicate their location and/or size; otherwise, these and other components of the system should be sized and located by the system supplier in accordance with his approved brochure.

(1) General Precautions To Be Observed in Laying Out a System

Except where there are no alternatives, underground heat distribution systems should not be run through areas in which coal has been stored or ashes deposited or along or under drainage ditches or low places where water collects.

Where conditions require that a system be run through such areas, and installation of an aboveground system is not feasible[3], the portion of the underground system that passes through the area should be suitable for sites classified as having severe water conditions and corrosive soil, regardless of the type of system employed in other locations.

(2) Operating Temperature Classification

Each application should be classified as to the maximum temperature of fluid to be distributed in the system, as follows:

(a) High Temperature--The fluid temperature will be higher than 260 °F but less than 450 °F.

(b) Medium Temperature--The fluid temperature will be higher than 200 °F but lower than 260 °F.

(c) Low Temperature--The maximum fluid temperature will be 200 °F or lower.

(3) System Insulation Requirements

System insulation requirements should be specified in contract documents in terms of the maximum permissible heat loss, in Btu/ft-hr, for each pipe in each section[4] of the system. The maximum permissible heat loss value should be determined on the basis of an economic analysis performed in accordance with the procedures presented in appendix B or through use of an agency-supplied computer program. The earth temperature, earth thermal conductivity factor, and depth of burial assumed in the analysis also should be shown in contract documents. Condensate lines should be buried directly without insulation unless their insulation would offer a substantial economic advantage.

---

[3]Consideration of aboveground insulated piping systems is beyond the scope of this report; however, it is believed that they are far less costly and less troublesome than underground insulated piping systems and, wherever feasible, should be employed, at least in part, in lieu of an underground system. The design of and specifications for aboveground systems should be in accordance with existing agency criteria and/or accepted engineering practice for such systems.

[4]In determining insulation requirements, a section can be considered as any portion of the system in which the conditions that affect heat loss are similar--e.g., pipe size, depth of burial, and soil type.

(4) Disposal of Water

Contract documents should call for every manhole to be equipped with either an automatically controlled electric sump pump or a gravity drain for removing any water that might collect in the manhole, unless it would prove prohibitively expensive to do so and the agency agrees to the deletion. Gravity drains should be used, however, only if there is virtually no possibility of water backing up through the drain into the manhole. Discharge from sump pumps should be piped to a storm sewer or drainage ditch or, if this is not practicable, dispersed over the ground.

If it is conceivable that a system employing a conduit underdrain might be installed, contract documents should require the installation of sumps to collect the water from such underdrains and either pumps or gravity drains connected to storm sewers or drainage ditches to dispose of collected water.

c. Designing Special Elements of the System

If some elements of a system will be subjected to unusual loads (e.g., where manholes or conduits must be located under roadways), the project designer should either custom design such elements to accommodate the anticipated loads or provide for distribution of the loads in such a way that they are not imposed on the system. In custom designing system elements the project designer should, to the extent possible, adhere to the criteria applicable to system suppliers.[5]

d. Reviewing Submittals

The project designer should review the successful bidder's detailed plans for the project to ensure that they are in accord with the supplier's approved brochure[5] and satisfy the requirements set forth in contract documents. Upon completion of this review, the project designer should submit a report to the contracting officer indicating that the plans are either satisfactory or unsatisfactory and, if unsatisfactory, the nature of the shortcomings.

C. GUIDE SPECIFICATIONS

Guide specifications[6] for underground heat distribution systems should stipulate that:

---

[5]See section D, Prequalification Program, p. 9.

[6]Guide specifications are prepared by the headquarters of an agency to serve as a guide in the preparation of project specifications by the project designer.

1. The system to be installed must be one that has been approved for use by the contracting agency under the site and application conditions indicated in contract documents.

2. Prior to the initiation of work, the contractor must provide the contracting officer with a copy of the agency-approved brochure describing the system to be installed and also must submit the following to the contracting officer for approval:

   a. A detailed layout of the system showing the size, type, and location of each component to be used in the system, including, if applicable, the type of cathodic protection system to be used.

   b. A set of calculations demonstrating that the maximum permissible heat loss requirements set forth in contract documents will not be exceeded with the thicknesses of insulation to be provided.

   c. A proposed schedule of activities indicating when various items of work and tests are to be carried out and when quality control inspectors of the supplier will be present at the job site.

3. If the contractor is not the manufacturer or supplier of the system, the layout and insulation calculations must be prepared by and the proposed schedule have the prior approval of the system manufacturer or supplier.

4. The method of fabrication and installation, the quality, and the size, type, and location of components shown on the layout must be in accordance with the approved system brochure.

5. The procedures to be followed in assuring the quality of individual components and the complete system also must be in accordance with the approved brochure.

Guide specifications for underground heat distribution systems should not deal with subjects covered in brochures. However, the instructions to designers appended to guide specifications should indicate that when special circumstances require the use of particular components (see preceding section on design) the detailed requirements for such components must be included in project specifications.

D. PREQUALIFICATION PROGRAM

Agencies should establish a prequalification program for underground heat distribution systems under which a system supplier can obtain approval to bid on agency projects. The prequalification program should be implemented jointly by federal construction agencies (e.g., either as part of the Federal Construction Guide Specifications program or through expansion of the present Tri-Service Committee) as outlined below.

1. Criteria for evaluating proposals, modeled on the criteria presented in section E, pp. 15-24, should be prepared.

2. An interagency committee should be established to review proposals from suppliers and to recommend a course of action to agencies with regard to approving proposals.

3. Instructions on how to obtain approval of underground heat distribution systems should be developed and distributed to potential suppliers of such systems. The instructions should explain the systems approach to the procurement of such systems, procedures for submitting proposals, the various site and application classifications for systems, the criteria to be used in evaluating proposals, and the basis on which approval can be withdrawn. Additionally, these instructions should stipulate that separate proposals are to be submitted for each basically different type of system being offered for use, even if some components are the same in the different systems or if the different systems are considered suitable for use in the same applications.

   The instructions should further stipulate that a proposal is to comprise two parts--a brochure plus a technical report. The brochure should include seven sections (Introduction, Organizational Arrangements, Hardware Specifications, Application Engineering, Installation Specifications, Quality Control, and Maintenance and Repair) each of which is to present the specific information identified below.

   a. Introduction

      The introduction section of the brochure should include: (1) a clear description of the general nature and basic operating principal of the system, (2) an indication of the underground water conditions and operating temperature classifications for which the system is considered qualified for use under agency criteria, (3) a listing of limitations on system application, and (4) a statement certifying that systems supplied on agency projects will be designed, fabricated, and installed in accordance with the brochure unless contract documents for a project specifically require otherwise.

   b. Organizational Arrangements

      The organizational arrangements section of the brochure should describe in detail the supplier's organization and the general procedures he proposes to follow when supplying systems for federal projects.

   c. Hardware Specifications

      The hardware specification section of the brochure should be correlated with the application engineering section of the brochure and the technical report portion of the proposal and should include: (1) complete descriptions of all assemblies,

subassemblies, materials, and components to be used in the system either as standard or as optional items; and (2) a detailed description of what the supplier will furnish and what the installing contractor (if other than the system supplier) must furnish.

Each item should be described, as appropriate, in terms of its nature, formulation, trade name, standard designation, and size; the minimum level of quality; and either the method to be used in making or assembling it or the standard specification to which it conforms. As a minimum, specifications, supplemented by drawings when necessary, should be provided for all of the following items that are employed with the system:

(1) The conduit/insulating-envelope assembly[7]--including straight sections, elbow sections, expansion loops, terminal sections and pipe anchor sections--and such items used in the assembly as carrier piping, insulation, insulation wrapping, insulation bands, pipe supports, pipe anchors, pipe guides, conduits, protective coatings, protective wraps, joint seals, conduit terminals, and isolation couplings.

(2) Manholes and such items used in manholes as carrier piping, pipe supports, insulation, insulation wrapping, insulation bands, access doors, ventilation pipes, sump pumps and controls, safety ladders, expansion joints (for piping), floors/walls/ceilings, and wall coatings.

(3) Cathodic protection systems and such related items as sacrificial anodes, rectifiers, and leads.

(4) Groundwater drainage systems.

(5) Special backfills.

(6) Special structural elements for unstable soils and superimposed loads.

d. Application Engineering

The application engineering section of the brochure should include: (1) a complete listing of all components, materials, and assemblies--and all sizes and variations thereof--required to construct the entire range of systems the supplier proposes to furnish for agency projects; and (2) detailed guidelines on

---

[7]The term "conduit/insulating-envelope assembly," as used in this report, means the carrier piping plus the composite of all the basic components employed to protect and insulate carrier piping--e.g., pipe supports, insulation, conduit, protective covering, and end seals.

selecting and sizing components for a particular application. In essence, the guidelines should comprise the rules and procedures that the supplier proposes to follow in putting together a system that satisfies the site conditions and application requirements set forth in the contract documents for a particular project. As a minimum, guidelines should cover the following topics:

(1) Insulation Selection--If the supplier proposes to use different types of insulation in different situations (e.g., depending on the temperature of the fluid being distributed), the guidelines should indicate (a) under what circumstances the different types are to be used, and (b) the computational procedures to be used in determining the thickness of insulation to use in a particular application in order to ensure that a specified maximum permissible heat loss will not be exceeded. Generally, the computational procedures outlined in the guidelines should be identical to those presented in appendix B. Pipe conductance factors, prepared in accordance with appendix C, for the system for all possible combinations of pipe diameter and thickness of insulation also should be included in the guidelines.

(2) Conduit/Insulating-Envelope Selection--If the supplier proposes to vary the components used in his conduit/insulating-envelope assembly depending on the situation (e.g., groundwater conditions, soil corrosiveness, the temperature of the fluid being distributed, the number of carrier pipes), the guidelines should identify the configurations the conduit/insulating envelope will take in various circumstances and the cross-section dimensions of the conduit/insulating envelope for different diameters and numbers of carrier pipes and different thicknesses of insulation.

(3) Expansion/Contraction-Device Selection--The guidelines should indicate the type, size, and location of expansion/contraction devices (if required with the system to accommodate carrier piping expansion/contraction) to be used in various circumstances (e.g., with different lengths and diameter of pipe and soil conditions).

(4) Pipe-Anchor Selection--The guidelines should indicate the type, size, and location of anchors to be used in various circumstances (e.g., with different types of soil and different sizes and lengths of carrier pipe).

(5) Manhole Selection--The guidelines should indicate the type, size, and location of manholes to use in various circumstances (e.g., with different groundwater conditions and different manhole piping arrangements).

(6) Condensate-Line Selection--The guidelines should indicate the type of condensate line to be used in various circumstances.

(7) Use of Groundwater Drainage Systems--If in certain circumstances a groundwater drainage system must be installed under or beside the conduit/insulating-envelope, the guidelines should indicate the conditions under which such systems are to be used.

(8) Use of Cathodic Protection--For systems employing ferrous-metal conduits or manholes, the guidelines should indicate where cathodic protection is to be provided and how the cathodic protection system is to be designed.

(9) Use of Special Backfills--If special backfills must be used with the system in certain circumstances (e.g., with unstable or low pH soil), the guidelines should indicate when such special backfills are to be employed.

e. Installation Specification

The installation specification section of the brochure should indicate precisely how the various components are to be handled, assembled, and installed in the field and the level of quality to be achieved. All phases of the work from excavation to backfilling should be covered and all special tools to be used in handling and assembling the system should be listed.

f. Quality Control

The quality control section of the brochure should indicate in detail the inspections and tests to be performed during fabrication and installation of the system to assure the quality of the final product.

g. Maintenance and Repair

The maintenance and repair section of the brochure should describe in detail when and how maintenance checks are to be made on the system, how preventive maintenance is to be performed, and how system repairs are to be made.

Since brochures will, by reference, be made a part of the contract documents for a project, they should, as a general rule, be written in direct, precise, legally binding language. They should indicate unequivocally what the system supplier will do and provide and what the installing contractor, if other than the system supplier, must do and provide.

The technical report portion of the proposal should provide evidence that the components of the system--both individually and collectively--are suitable for use in the applications for which the supplier believes they are suitable. The evidence submitted in the technical report should be in the

form of test results, mathematical calculations, and/or operating experience that demonstrate conclusively that the materials, components, and assemblies satisfy the relevant criteria. When nationally recognized test procedures or engineering formulas that directly relate to the criteria are available, they should be used; when not available, the supplier should develop special tests or formulas. If special tests or formulas are developed, the supplier should provide evidence of their validity relative to the criteria.

All tests, except standardized tests of such widely used products as steel pipe, should be conducted by an independent testing laboratory that is qualified to conduct the required tests. The technical report of the supplier should include the actual test report of the laboratory. Manufacturers' published data should be provided for widely used products for which standardized tests have been developed.

When various sizes of a component or assembly are to be provided or when various combinations of components or materials are to be used in different situations and it is impractical to test each different size or combination individually, the supplier should be able to demonstrate that the results of tests on a particular combination of components or on a component or assembly of a particular size are valid for other combinations and sizes.

The proposal should be submitted in two stages--first, for preliminary review and approval and, second, for final approval. In the first stage, a draft of the brochure plus a detailed description of the testing program the supplier proposes to undertake or the nature of other evidence he proposes to submit to demonstrate the suitability of the components of his system and the name of the organization that will carry out the test program are to be submitted; in the second stage, the final version of the brochure plus the full technical report showing the results of the approved testing program and any other evidence are to be submitted.

The instructions should indicate that if the supplier wishes to make changes to an approved system or in some aspect of his operation, prior approval of that change must be obtained. (In most cases, however, only the specific change being proposed will need to be evaluated.) The instructions also should indicate that approval can be withdrawn if technical problems arise or failures occur with a system, if the data presented in the brochure or technical report are found to be inaccurate, or if the system supplier fails to follow the procedures, practices, or specifications indicated in his brochure.

REPRODUCIBILITY OF THE
ORIGINAL PAGE IS POOR

E. PREQUALIFICATION CRITERIA

1. System Performance Criteria

a. Resistance to Groundwater Infiltration

(1) Conduit/Insulating-Envelope--The conduit[8] or insulating envelope[9] to be used with a system should possess an inherent resistance to groundwater infiltration that is commensurate with the underground water conditions for which prequalification of the system is being sought.

Pressure-testable conduit should be considered acceptable for use if it is factory fabricated in sections at least 10 feet long and if the supplier can demonstrate by tests and experience that: (a) the conduit can be readily air-pressure tested to the pressures indicated in Table 1 at the time of installation and any time thereafter for the life of the system; (b) after being pressurized to the appropriate level, the pressure will not drop more than 1 psig in 24 hours; and (c) this degree of tightness can be maintained over the life of the system under typical operating conditions for an underground heat distribution system (e.g., with the temperature of the distributed fluid varying occasionally between ambient and the maximum design temperature for the system).

TABLE 1 Minimum Test Pressures for Pressure-Testable Conduit Assemblies

Groundwater Condition Classification	Minimum Test Pressure (psig)
Severe	15
Bad	15
Moderate	7-1/2
Mild	7-1/2

[8]A conduit is a rigid or semirigid structure that surrounds and protects the carrier pipe and its insulation. A conduit may be either pressure-testable, meaning that it can be sealed tightly enough to hold an air pressure, or non-pressure-testable.

[9]An insulating envelope is a mass of insulating material that surrounds, protects, and insulates a carrier pipe. The insulating material may be either directly in contact with the soil or separated from the soil by a nonstructural wrapping or casing.

Non-pressure-testable conduits and insulating envelopes should be considered acceptable for use in the areas indicated in Table 2 if the supplier can demonstrate by tests and experience that: (a) no measurable quantity of water will enter the conduit/insulating-envelope assembly when it is subjected, over its entire outer surface for a period of 48 hours or longer, to the heads of water listed in Table 2 (or the equivalent water pressure); and (b) this degree of tightness can be maintained over the life of the system under typical operating conditions for an underground heat distribution system.

TABLE 2 Minimum Head of Water to Which Non-Pressure-Testable Conduits and Insulating-Envelope Assemblies Should Be Subjected During Test

	Minimum Head of Water (ft)[a]	
Groundwater Condition Classification	Non-Pressure-Testable Conduits	Insulating Envelopes
Severe	NA[b]	NA[b]
Bad	20[c]	NA[c]
Moderate	5 If a suitable groundwater drainage system is not to be employed	5 If a suitable groundwater drainage system is not to be employed
	2 If a suitable groundwater drainage system is to be employed	2 If a suitable groundwater drainage system is to be employed
Mild	1	1

[a]The head of water should be measured from the top surface of the conduit/insulating-envelope assembly.

[b]Non-pressure-testable conduits should not be considered acceptable for use in areas with severe groundwater conditions, and insulating envelopes should not be considered acceptable for use in areas with severe and bad underground water conditions.

[c]To be considered acceptable for use in areas with bad underground water conditions, a non-pressure-testable conduit should be of a type that is factory fabricated in sections at least 10 feet long.

Demonstration tests for all types of conduit and insulating envelope should simulate actual operating conditions and, wherever feasible, should be performed using a full-scale working assembly that is at least 50 feet long and includes at least one 4-inch carrier pipe, two field joints, one anchor, two manhole terminals, and one expansion loop (or, if expansion loops are not available with the system, one 90° elbow).

If a groundwater drainage system is to be employed to remove groundwater from the area around the conduit/insulating envelope, the supplier should be able to demonstrate that the type of groundwater drainage system to be used is effective and will function for at least 25 years.

(2) Manholes--The manholes to be used with a system also should possess an inherent resistance to groundwater infiltration that is commensurate with the underground water conditions for which prequalification is being sought.

Pressure-testable manholes should be considered acceptable for use in areas with severe, bad, moderate, or mild underground water conditions if the supplier can demonstrate by test and experience that: (a) the manhole can be readily air-pressure tested at the time of installation to 5 psig, (b) after being pressurized the pressure will not drop more than 1 psig in 24 hours, and (c) this degree of tightness can be maintained over the life of the system under typical operating conditions.

Non-pressure-testable manholes should be considered acceptable for use in areas with bad, moderate, or mild underground water conditions if the supplier can demonstrate by test or experience that no appreciable quantity of water will enter the manhole when it is subjected to the heads of water shown in Table 2 for non-pressure-testable conduits.

b. Resistance to Water Damage

The conduit/insulating-envelope assembly--comprising the conduit or insulating envelope plus, as applicable, such related components as piping, pipe supports, pipe guides, pipe anchors, insulation, and protective coverings or coatings--should possess an inherent ability to limit damage should water enter the interior of the conduit or envelope either as a result of a pipe leak or infiltration. Specifically, the assembly should be either drainable and dryable in place, sectionalized, or otherwise constructed to limit the spread of moisture or water in the event of water infiltration.

Drainable and dryable systems should be considered acceptable for use in any area, regardless of the underground water conditions, if the supplier is able to demonstrate by test of a complete conduit/insulating-envelope assembly (similar to the one described in paragraph a above) that the interior of the conduit/envelope can, after being flooded with water for at least 24 hours, be completely drained of water and the insulation dried to not more than 5 percent moisture by weight within 96 hours using, as the drying impetus, the heat of the carrier pipe with the temperature at the low end of the temperature range for which the system is intended to be used and, if necessary, forced air at ambient temperature. The supplier also should be able to demonstrate by tests or calculations that both larger and smaller versions of the assembly can be drained and dried in place.

Water-spread-limiting systems should be considered acceptable for use in areas with bad, moderate, or mild underground water conditions if the supplier is able to demonstrate by test of a complete conduit/insulating-envelope assembly [similar to the one described in paragraph a(1) above] that (1) with water introduced into the conduit envelope under the highest pressure that could conceivably be developed as a result of a carrier pipe leak, water or water vapor will not spread more than 20 feet within the conduit/insulating envelope (i.e., the sum of the spread on both sides of the point at which water is introduced should not exceed 20 feet) during 14 days; and (2) the portion of the system that does become wet can be removed and replaced or otherwise restored without disturbing the remainder of the system.

In the case of either the water-spread-limiting or drainable and dryable type of system, water at ambient temperature and water or steam at the high end of the temperature range for which the system is intended to be used should be circulated alternately (e.g., 24 hours at each temperature) through the system carrier piping for at least 14 days prior to the test and during that part of the test when the conduit/insulating envelope is flooded.

In addition the insulation and other nonmetallic items employed in all drainable and dryable conduits, all insulating envelopes (except those of the water-spread-limiting type), and all manholes should be resistant to deterioration as a result of being submerged in boiling water. Specifically, the supplier should be able to demonstrate by test that, after being submerged in boiling water at atmospheric pressure for a period of 96 hours and then dried, the k[10] value of the

---

[10]Thermal conductivity in Btu/hr, ft^2, °F/in.

insulation used will not have increased more than 10 percent and the insulation and other nonmetallic items will not have been damaged in any way that could adversely affect the functioning of the system.

c. Resistance to Mechanical or Structural Damage

All components of a system should be resistant to damage due to the loads and forces normally imposed on them under operating conditions. Specifically, the supplier should be able to demonstrate by tests, calculations, or operating experience that:

(1) The conduit/insulating envelope, in its assembled configuration, will not crack or deflect enough diametrically to impair the functioning of the system or otherwise fail for a period of at least 25 years when subjected to a soil burial load equivalent to 12 feet of 140 lb/ft^3 backfill, plus a surcharge load of 300 lb/ft^2, when installed in accordance with the instructions of the supplier under the most adverse circumstances (e.g., a projecting conduit in the embankment condition) and when operated at the highest temperature for which the system is being qualified for use.

(2) The conduit/insulating envelope will not rupture or deform due to expansion and contraction forces.

(3) The conduit/insulating envelope will not rupture or deform due to the weight of carrier piping.

(4) Manhole walls and roof will not crack or cave in when subjected to the maximum soil burial loads expected to be encountered.

(5) Pipe supports (and insulation, if it is used to support carrier piping) will not be crushed, cracked, or abraded by the weight or movement of the piping.

(6) Pipe anchors will not fail or move when subjected to expansion and contraction forces, regardless of the type soil.

(7) Metallic jackets on insulation in manholes will withstand the type of abuse that is normally associated with maintenance work in manholes.

(8) Carrier piping, valves, traps, expansion joints, and similar items exposed to steam, condensate, or hot water will not fail for a period of at least 25 years when subjected to the maximum pressures and temperatures likely to be encountered under normal operating conditions. (Evidence of the suitability of any of these items need

not be submitted if the supplier stipulates that the item to be supplied meets an applicable federal, military, or nationally recognized specification that is acceptable to the agencies.)

In addition, the system should be designed in such a way as to minimize the chance of excessive forces and loads being imposed on the individual components of the system. Specifically, the supplier should be able to demonstrate that:

(1) Expansion/contraction devices will be adequate to accommodate the anticipated expansion and contraction of carrier piping.

(2) Pipe supports will be spaced closely enough to prevent undue deflection of carrier piping or the concentration of an excessive portion of piping weight on each support.

(3) When pipe anchors are located some distance from a manhole or building wall, the type of conduit/insulating-envelope terminal used at manhole or building walls will permit, if necessary, longitudinal movement of the pipe and conduit through the wall.

d. Resistance to Corrosion

All ferrous-metal conduits and manholes should be protected against exterior corrosion by means of a coating or wrapping. The supplier should be able to demonstrate by tests that the coating or wrapping to be used is initially and will remain virtually impervious to moisture and will not slump, crack, peel, delaminate, powder, or crumble for a period of at least 25 years when installed in accordance with the instructions of the supplier and when exposed indefinitely to saturated soil and temperatures of 180 °F and occasionally, for periods of up to 10 days, to temperatures of 220 °F.

e. Resistance to Other Causes of Deterioration

The supplier should be able to demonstrate by tests and/or experience that the components to be supplied are either naturally resistant to such other potential causes of deterioration as low soil pH, termites and soil bacteria, heat, and ultraviolet radiation or that the possibility of deterioration due to such causes has been eliminated by the design of the system or the installation procedures to be followed.

f. Simplicity of Installation

The supplier should be able to demonstrate by tests and/or experience that the system can be properly installed, without being damaged, by ordinary mechanics under conditions commonly encountered in the field and, in particular, that any plastic

products used can be properly and consistently joined and/or formed under field conditions.

g. Ease of Repair

The supplier should be able to demonstrate that: (1) failure in the system can be readily detected, located, and repaired; (2) the guidelines to be used for sizing manholes will permit components in manholes to be readily repaired or replaced; (3) the natural ventilation system to be used in manholes is adequate to cool the interior enough (e.g., below approximately 120 °F under most circumstances) to permit short periods of work; and (4) the manhole access opening is large enough to permit easy passage of both men and replacement components and can be easily removed by workmen using hand tools but not by children.

2. System Application Criteria

a. Pipe Loops

Pipe loops should be employed to accommodate expansion/contraction unless space limitation precludes their use; where loops cannot be used, expansion joints are to be installed in manholes.

b. Pipe Anchors

Carrier-pipe anchors should be located immediately outside of manhole walls unless an expansion/contraction device is to be installed in a manhole. Manhole and building walls should not be used as anchors.

c. Condensate Line

Condensate lines should be buried directly without insulation unless contract documents specifically require otherwise. When contract documents call for insulated condensate lines, they should be installed in a separate conduit envelope, except in the case of concrete trenches and loose-fill insulating envelopes. Condensate lines should be reinforced plastic pipe, plastic-coated steel pipe, or copper pipe (except that copper pipe should not be used for lines to be located in a steel conduit or in a conduit/insulating envelope with steel pipe).

d. Manholes

Manholes should be installed at each point where a valve, high-pressure drip trap, or other device that is not an inherent part of the conduit/insulating-envelope assembly is to be located or at intervals of not greater than 500 feet in uninterrupted runs of pipe. Manholes should be sized to provide ample room for the maintenance or replacement of all items

REPRODUCIBILITY OF THE
ORIGINAL PAGE IS POOR

located in them. All piping and valves in manholes should be insulated with not less than the amount of insulation indicated in Table 3, and such insulation should be covered with a sheet-metal jacket. Unless the contract documents for a project indicate otherwise, all manholes should be equipped with automatically activated electric sump pumps.

e. Cathodic Protection

A cathodic protection system should be installed to protect ferrous metal conduits and manholes at all sites classified as corrosive and also at all sites classified as mildly corrosive, unless the ferrous metal structure involved has a hot-dipped galvanized coating weighing at least 2 ounces per square foot. The cathodic protection system should be specially designed for the application in accordance with recognized technical manuals for such work by an engineer who is a specialist in corrosion protection.

3. Installation Criteria

Installation procedures (especially for excavation and backfilling, welding, and the joining and forming of plastics) should be in accordance with current guide specifications of federal agencies and/or accepted industry standards. During installation, suitable precautions should be taken to minimize damage to components while being handled.

4. Quality Control Criteria

a. Every system component should be either tested or inspected both in the factory and at the time of installation.

b. Pressure-testable conduits should be pressure tested at the time of installation, both before and after backfilling (the two tests to be carried out separately).

c. Protective coatings and coverings on steel conduits and manholes should be spark tested after installation.

d. A quality control representative of the supplier should be present at the job site to inspect all installation work except such routine operations as excavation and backfilling.

e. On those projects involving use of plastic pipe or conduit or foamed-in-place plastic insulation, a quality control representative of the plastic product manufacturer should be present at the job site to inspect the installation of his product.

TABLE 3 Minimum Thickness of Insulation To Be Used in Manholes (inches) in Relation to Nominal Pipe Diameter and Dry Thermal Conductivity

	Nominal Pipe Diameter (in.)									
k[a]	0.5-2	2-2.5	3	3-3.5	4	5	6	8	10	12
0.0-0.35	1.0	1.5	1.5	1.5	1.5	1.5	2.0	2.0	2.0	2.5
0.40	1.5	2.0	2.0	2.0	2.0	2.0	2.5	2.5	2.5	3.0
0.45	1.5	2.0	2.0	2.0	2.0	2.0	3.0	3.0	3.0	3.5
0.50	2.0	2.5	2.5	2.5	2.5	2.5	3.5	3.5	3.0	4.0
0.55	2.0	3.0	3.0	3.0	3.0	3.0	4.0	3.5	3.5	4.5
0.60	2.5	3.5	3.5	3.5	3.5	3.0	4.5	4.0	4.0	5.0
0.65	2.5	4.0	4.0	4.0	4.0	3.5	5.0	4.5	4.5	5.5
0.70	3.0	5.0	4.5	4.5	4.5	4.0	5.5	5.0	5.0	6.0

NOTE: These data are applicable to temperatures up to 400 °F. (Condensate lines need have a maximum insulation thickness of 1 inch provided the k factor is below 0.45.) Thicknesses were determined utilizing 0.35 as a base and measuring the thickness when the calculated heat saving was between 20 and 25 Btu/hr, ft of pipe. Thickness of insulations with a k factor greater than 0.35 were selected to provide an approximate heat loss equal to that at 0.35.

[a]Thermal conductivity in Btu/hr, ft^2, °F/in. as determined by ASTM Test Method C-177 at a mean temperature of 200 °F. For an intermediate k factor, use the k factor nearest (e.g., for 0.374 use 0.35; for 0.375 use 0.40).

5. Criteria for a System Supplier's Organization

The organization of a system supplier should permit the supplier to assume his responsibilities under the systems approach and specifically should include:

a. An application engineering capability provided either by an in-house staff or by a private engineering firm (retained on a continuing basis) that is adequately staffed to select and/or design components for and layout a complete system in accordance with the general requirements set forth by the project designer (see paragraphs B2 and B3, pp.4-8) and, in the case of systems employing steel conduits on manholes, to design a cathodic protection system when required.

b. A *bona fide* factory quality control department that is adequately staffed to closely monitor all aspects of product quality and that has real authority to reject materials or work not meeting specifications or quality standards.

c. A field inspection service provided either by a permanent in-house staff or through private engineering firms (retained on a continuing basis) having factory-trained personnel experienced in such work to monitor the work of installing contractors.

d. A system maintenance/repair capability provided through authorized service representatives or a factory service department that is sufficient to service the system anywhere it is installed.

III
DISCUSSION

A. GENERAL

The basic purpose of an underground heat distribution system is merely to convey heated fluid (e.g., steam or hot water) from one point to another underground. In its simplest form, a system could comprise nothing more than a buried pipe; however, such a simple form is rarely adequate. In most cases a number of other items are needed--e.g., insulation to minimize heat loss; a conduit or covering of some kind to protect the insulation from damage due to water and earth loads (unless the insulating material is naturally resistant to such damage); pipe supports to bear the weight of the piping; expansion joints or loops to accommodate thermal expansion and contraction of the piping; pipe anchors to ensure that the expansion and contraction of the piping occur in a predictable manner; manholes to divide the system into segments; protective coatings and cathodic protection to minimize corrosion of ferrous elements of the system; and miscellaneous pumps, valves, traps, and drains.

Traditionally, federal agencies have procured underground heat distribution systems, and most other systems related to buildings and building complexes, through a process frequently referred to as the "traditional approach" to construction. This process basically involves two steps: First, the agency has plans and specifications prepared by a design organization--i.e., either a private professional design firm or a design office within the agency. Second, the agency hires a contractor, ordinarily on the basis of competitive bids, to construct the facility in accordance with the plans and specifications.

A number of years ago, underground heat distribution systems were custom designed *in toto* by the system designer (i.e., virtually every element of the system was designed by the system designer, ordinarily contemplating the use of locally available basic building materials). In recent years, various manufacturers have developed and marketed a variety of proprietary, pre-engineered products for underground heat distribution systems, and most designers have elected to specify such products in lieu of custom designing the individual elements of a system themselves. Such products generally fall into two categories[1]:

---

[1]A number of other proprietary products of a somewhat preferred nature are also available for use in underground heat distribution systems (e.g., prefabricated manholes and expansion joints).

- Prefabricated conduit assemblies comprising such components as piping, insulation, pipe supports, conduit, pipe loops and pipe anchors.

- Proprietary insulating materials that can be used underground without a conduit.

In order to specify proprietary products the design engineer in effect must design his system around the particular products to be used since most such products have unique features that dictate how they are to be employed and how they are to interface with other system components. These product-imposed limitations are easily accommodated under the traditional approach if specifications are generally restrictive (i.e., if they give the contractor few, if any, options concerning the products he may use when constructing the system); however, if specifications permit the contractor many options, the traditional approach becomes, for practical purposes, unworkable (i.e., to include many different products with widely different characteristics as options, the design engineer would have to develop a number of different designs reflecting the various possible combinations of products that might be used, an effort that at the very least would greatly increase design costs).

Because most private owners do not object to restrictive specifications, this problem is of no concern on most privately financed projects. However, the problem can be a very real one for federal agencies since they are prohibited by regulation from unduly restricting competition. In the past the problem was not a serious one in connection with underground heat distribution systems because federal agencies had very stringent acceptance criteria and testing procedures--developed when the agencies were experiencing a very high rate of failure with underground heat distribution systems--that only a few types of system component could pass. Recently, however, many promising new products for underground heat distribution systems have been developed and marketed, and, when this study was undertaken, the Committee concluded that it would be desirable to broaden and liberalize the criteria to permit at least some of these new products to be considered for possible use. The Committee recognized, however, that adoption of this course of action would greatly increase the number of options to be considered and thus almost preclude continued use of the traditional approach in the procurement of underground heat distribution systems.

In seeking a workable alternative, the Committee considered various possibilities. It opted for a variation of the so-called "systems approach," which has been used successfully in a number of locales to procure school facilities. The approach devised by the Committee is considered a variation of (i.e., somewhat different than) the systems approach used previously because it applies only to underground heat distribution systems, not entire facilities, and because it can be employed in connection with a larger project being carried out under the traditional approach. The Committee's approach is, however, similar to the systems approach used previously in that the major objective is to assign

REPRODUCIBILITY OF THE
ORIGINAL PAGE IS POOR

to the manufacturers of those products that form the heart of the system[2]--in this case an underground heat distribution system--significant responsibility for both design and installation of the complete system.

Basically, under the systems approach proposed by the Committee, manufacturers of key system components would have the following responsibilities:

1. Designing and fabricating or specifying all components required for the proper functioning of the system. (The supplier would not necessarily have to fabricate all components himself--some could be fabricated by other manufacturers or the installing contractor[3]; however, the manufacturer would, as a minimum, have to design and/or specify every item used with his system--not just those he chooses to market).

2. Developing detailed guidelines for installing the system, detailed application engineering guidelines indicating the circumstances under which the system can and cannot be used and the proper combination of components to use in a given situation, and finally guidelines for testing and inspecting the system.

3. Selecting the proper set of components to be employed for a particular project, in accordance with his own application engineering guidelines and the general requirements set forth by the professional design organization responsible for the project.

4. Ensuring that the components selected are fabricated and installed properly, in accordance with his own inspection and testing guidelines.

With such responsibilities, a component manufacturer would, for practical purposes, become the supplier of a complete system. For this reason, the term *system supplier* will be used in lieu of *component manufacturer* in the remainder of the discussion. It also should be noted that the supplier of a system under the systems approach would not necessarily have to be a manufacturer; it could be a contractor, provided he was willing to assume all of the responsibilities and duties associated with supplying a system under the systems approach. It is considered unlikely, however, that many contractors would do so.

Adoption of the systems approach, with broad responsibility assigned to the system supplier, would--in addition to making it practicable to

---

[2]That is, manufacturers of prefabricated conduit assemblies and proprietary insulating material that are to be used without a conduit.

[3]A manufacturer could if he wished install his own system; such action is neither required nor anticipated under the Committee's concept.

increase the number of underground heat distribution system products used on agency projects--be desirable for two reasons: First, it would compel system suppliers to acknowledge and accept some responsibility for the application and installation of their products. Currently most designers and contractors rely heavily on suppliers for guidance regarding the design and installation of system components; in fact, in many cases suppliers are the only source of such guidance and their advice is almost indispensable. Yet, under the traditional approach, suppliers are not responsible for the accuracy of their guidance and, if something goes wrong, they can seldom be held liable for poor advice. This situation does not seem fair, and the Committee hopes that it can be corrected, at least in part, through use of the systems approach. (In fairness it should be noted that many manufacturers accept responsibility in this area even though they are not legally bound to do so.) Second, and conversely, use of the systems approach would minimize the chance of a supplier's reputation being harmed through misapplication or improper installation of his product. Under the traditional approach, designers and contractors are ordinarily not bound to follow the guidance of a supplier; although a supplier is not legally responsible if his guidance is ignored, the supplier may nevertheless be blamed for the failure.

Because the systems approach is significantly different from the traditional approach and is unfamiliar to most participants in the building process, the Committee has developed a comprehensive plan for implementing the systems approach, the main features of which are listed below:

1. Agencies jointly would have to develop and publish new criteria for judging the suitability of the underground heat distribution system hardware that a manufacturer proposes to use as well as the acceptability of the application engineering and installation guidelines that a manufacturer proposes to follow. The agencies also would have to jointly establish a new prequalification procedure for evaluating manufacturers' submittals. Manufacturers then would be invited to seek prequalification of their system hardware and their application engineering and installation guidelines under the new procedure.

2. Agencies would have to prepare instructions to designers defining the work for which they are responsible and indicating how that work must be carried out in order for it to be compatible with the work to be performed by manufacturers in the context of the overall systems concept.

3. Agencies would have to prepare new guide specifications defining the work to be performed by installing contractors and manufacturers on specific projects, with appropriate reference to the approved application engineering and installation guidelines of manufacturers.

The Committee's specific recommendations relative to these three broad tasks are discussed in subsequent sections of this report. Before beginning this discussion, the Committee offers the following observations regarding the implications associated with use of the systems approach.

First, some suppliers will undoubtedly resist and object to accepting broader responsibilities than they now have under the traditional approach. Other suppliers, however, probably will welcome the increased responsibilities assigned to them under the systems approach on the grounds that they already are performing many of the tasks called for under the approach without receiving recognition.

Second, adoption of the systems approach will have little impact on contractors except when a supplier elects to install his own system, which is not expected to happen often. Otherwise, the only substantive change from current practice for contractors would be in the installation specification they follow. Under the systems approach, the contractor would be given detailed instructions on installation through a supplier's guidelines rather than agency specifications. Inasmuch as contractors have frequently complained that agency specifications are difficult to understand, it is anticipated that contractors would welcome this change.

Third, adoption of the systems approach would have a somewhat greater impact on design organizations than on contractors. As indicated above and as discussed in the next section of the report, under the systems approach much of the responsibility currently assigned the design organization for detailed design would be assumed by the system supplier; instead of doing detailed design, the design organization would be required to devote its efforts to determining system requirements. For the design organization, therefore, implementation of the systems approach would mean a change in, rather than a reduction of, responsibilities.

Fourth, adoption of the systems approach would increase the work of agencies, but not as much as it might appear on the surface. The development and operation of a prequalification procedure would be the main task falling to agencies under the systems approach that is not normally required under the traditional approach. However, for a number of years several agencies have had a prequalification program for underground heat distribution system components, so the work load for such agencies would increase under the systems approach only to the extent that the new prequalification program requires more effort than the old one. For those agencies that have not had a prequalification program heretofore, adoption of the systems approach would require somewhat more work, but it is believed that this could be minimized through interagency cooperation.

B. PROJECT DESIGN

As indicated in the previous section, the role of the design organization (the professional architect/engineer) under the systems approach is different from that under the traditional approach. Although much has been written about the systems approach during the past few years, relatively few design organizations have participated in a project on which it has been used. Moreover, the systems approach will be used for the design and construction of underground heat distribution systems (assuming the Committee's recommendations are followed) in a manner somewhat different from that used on most previous projects. It is, therefore, considered

essential that agencies exercise care in selecting design organizations for underground heat distribution system projects and in instructing them on their duties.

1. Qualification of Design Organization

Compared to other modern utility systems, underground heat distribution systems are not particularly complex, and even an elaborate system is composed of relatively few parts. Furthermore, the requirements placed on an underground heat distribution system are not very demanding. Basically, most users expect only that the system will convey a certain quantity of heated fluid from one point to another, without leakage of the fluid or undue loss of heat, for a period of at least 25 years without the need for excessive maintenance or repair.

When viewed in this light, one might imagine that a satisfactory underground heat distribution system would be easy to obtain. This, however, has not been the case; until better agency specifications were developed several years ago, the incidence of failure or unsatisfactory performance of such systems was high.[4] Two factors, in addition to those cited previously, have probably contributed most to the relatively poor experience of users with underground heat distribution systems. First is the fact that the underground environment is exceedingly hostile to underground heat distribution systems; water abounds underground in most locations and is the principal enemy of an underground heat distribution system in that it can virtually destroy the thermal insulating value of insulation and cause rapid corrosion. Second is the fact that an underground heat distribution system is out of sight and, therefore, not subject to frequent inspection; hence, a system can deteriorate to the point at which repair is no longer possible before anyone realizes a problem even exists.

Obtaining a satisfactory underground heat distribution system is, therefore, not as easy as it would appear on the surface. Everyone involved in the design and construction of a system must be thoroughly familiar with the special problems associated with such systems if failures are to be avoided. One seemingly small error can result in the loss of a complete system.

Considering this fact, plus the fact that systems are quite expensive (an installed cost of $140 per foot for a system involving an 8-inch steam line and a 4-inch return is not unusual), the Committee believes that agencies are completely justified in establishing strict qualification requirements for organizations involved in the design and construction of systems. This, of course, applies to the design organization, the first link in the chain or organizations

---

[4] BRAB Federal Construction Council, Technical Report No. 47, *Field Investigation of Underground Heat Distribution Systems* (Washington, D.C.: National Academy of Sciences, 1963).

involved. The Committee believes agencies should require that the design organization (1) have experience with underground heat distribution systems and (2) be able to demonstrate that it can carry out its responsibilities under the systems approach. The rationale for the first requirement is considered self evident. The rationale for the second requirement will become clearer later in the discussion; suffice it to say at this point that under the systems approach being proposed by the Committee, the design organization is required to establish certain system requirements in a particular way and must have the capabilities required to do so.

2. General Responsibilities of Design Organizations

Most design organizations are accustomed to working under the traditional approach and, hence, to having virtually complete design responsibility. Under the systems approach, however, design responsibility is shared between the design organization and the system supplier; it is essential, therefore, that agencies explain the ground rules to the selected design organization at the start of a project.

Although some private design organizations may object to restrictions being placed on them, there is actually considerable precedent for agencies limiting the design freedom of such organizations. For example, many federal construction agencies have developed detailed guide specifications in order to ensure that quality products are obtained, without violation of federal government procurement regulations; such specifications, in effect, frequently limit design freedom.

In their design guidelines, agencies should explain, in a general way, the manner in which the systems approach will be employed in connection with underground heat distribution systems and define the responsibilities of design organizations under the systems approach. These are:

a. To define site conditions.

b. To determine the general layout and essential characteristics of the systems.

c. To design special elements of the system.

d. To review the detailed plans for carrying out the project submitted by the successful bidder.

The first two areas of responsibility are particularly important in connection with the systems approach. Under the proposed prequalification program, systems will be approved for use only for certain site and operating conditions and only if the system supplier has specified in detail how he will combine his components to form a complete system in various circumstances. In the overall scheme of things, use of a particular system will not be permitted on a given

project if it has not been approved for use with the site and operating conditions for the project, and the system supplier will be required to adhere strictly to his approved guidelines for combining components. Therefore, by defining site conditions and determining the general layout and essential characteristics of the system desired, the design organization will in essence be prescribing not only the general type of system that can be used on project, but also the particular set of components to be employed with each type of system.

3. System Design Criteria

In order to provide design organizations with specific guidelines for carrying out their responsibilities, agencies need to prepare detailed system design criteria. Such criteria are needed to ensure that (1) the work of the design organization is consistant with the systems approach concept, and (2) the design organization does not omit certain design features or fail to consider certain factors that have been found, through experience, to be important. The criteria relative to the four general areas of responsibility of the design organization are discussed below.

a. Defining Site Conditions

The Committee has identified four site factors as being of importance in the selection and application of an underground heat distribution system--underground water conditions, soil corrosiveness, soil pH, and soil stability. As envisioned by the Committee, the design organization would include information relative to these four factors in contract documents in order to permit a system supplier to determine whether his system is generally suitable for use with the conditions prevailing at the project site and, if so, what particular combination of system components must be used and/or what special installation techniques will have to be employed.

The Committee believes that four classifications should be used to define underground water conditions: severe, bad, moderate, and mild. If the site is small or if conditions are similar throughout the site, the entire site might have the same classification; otherwise, it is expected that different classifications might be given to different parts of a site.

As indicated previously, water is the primary enemy of underground heat distribution systems. This fact was recognized in the earliest FCC studies on the subject, and for many years both FCC criteria and agency specifications have required that the relative resistance of systems to groundwater infiltration be higher in areas where groundwater at the level of the system is abundant than in other areas.

Both logic and experience support this position. However, the Committee believes past criteria and specifications were slightly deficient on two counts with regard to the classification of groundwater conditions at a site. First, only two categories were recognized--wet and dry--and this is believed to be too few to reflect the great variety of water conditions that actually exist at different sites or the fact that the resistance of different systems to water infiltration varies widely. Second, the previous criteria left little room for design engineers to exercise judgment in classifying sites. In developing the new criteria the Committee has attempted to overcome these shortcomings by identifying four classifications of site groundwater conditions and by defining the site classifications in general terms that will permit the use of engineering judgment in making classifications.

The Committee believes that three categories should be used to classify sites with regard to soil corrosiveness--corrosive, mildly corrosive, and noncorrosive--depending on the resistivity of the soil at the site, local groundwater conditions, and whether or not stray currents are present. Sites need to be classified with regard to soil corrosiveness in order to permit suppliers of systems with ferrous conduits to determine the type of corrosion protection to be provided. Three categories are considered sufficient to permit this determination. The resistivity values that the Committee has suggested be used to classify sites are similar to the values that have been used successfully by several agencies for a number of years to classify sites as to their corrossiveness.

The Committee believes that any areas within a site having a soil pH of less than 5.0 also should be identified. Since low soil pH can be detrimental to concrete and cement asbestos, suppliers of systems having conduits made of such materials need to know if low soil pH is present at a site so that they can either plan to take compensating action or avoid bidding on the project.

Finally, the Committee believes that any areas at the site in which the soil is unstable should be identified on contract documents. Such information is needed by all system suppliers in order to prepare an accurate bid because unstable soil is a hazard to all systems in that it can cause a system to settle or move, thereby either precluding proper drainage or causing unanticipated loads to be imposed on the system.

b. Determining the General Layout and Essential Characteristics of the System

Under the systems approach, the design organization is expected to make a general layout of the proposed system just as under the traditional approach. The major difference between the two approaches in connection with this work is that the design

organization need not (and in fact should not) design or specify items that are to be selected by the supplier and are covered in the supplier's brochure--except when some extenuating circumstances require that an item be a particular size or in a particular place.

The design organization is expected, however, to indicate in contract documents information about the system that the system supplier will need in order to select and size components properly. In giving such information (or requirements), the design organization is, in essence, dictating to the manufacturer what components he will use but is doing so on the basis of performance rather than by actually selecting materials and sizing components; specifically:

(1) In lieu of selecting materials that can accommodate the temperatures to be encountered, the design organization must indicate the operating temperature classification of the system--i.e., high temperature (260 °F to 450 °F), medium temperature (200 °F to 260 °F), or low temperature (lower than 200 °F).

(2) In lieu of indicating the type and thickness of insulation to be used, the design organization must indicate the maximum permissible heat loss value (determined on the basis of the procedure presented in appendix B) plus the information that the supplier will need to determine the thickness of insulation he must supply in order to meet the specified maximum permissible heat loss value--namely, the earth temperature, the earth thermal conductivity factor, and the depth of burial.

In making the layout, the design organization would be expected to follow generally accepted rules of good practice that have been developed over the years and are mentioned in the recommendation section of this report.

c. Designing Special Elements of the System

In some cases (e.g., when a portion of a system will be subjected to superimposed loads that exceed the maximum loads for which systems have been designed and tested) the design organization would be expected to custom design affected elements or to provide for such loads in some other way. In custom designing a system element, the design organization would be expected to try to meet the criteria for the element that system suppliers have to meet.

d. Reviewing Submittals

Under the systems approach the successful bidder would be required to submit a detailed plan, indicating generally how the project will be carried out and specifically the sizes and types

of components to be used. If the successful bidder is a system supplier, the supplier would develop the plan himself; if the successful bidder is a contractor, he would be required to have the plan prepared by the system supplier. In either event, the plan would have to be in accordance with the approved application engineering guidelines of the system supplier. One of the duties of the design organization would be to check the proposed plan on behalf of the contracting officer to ensure that it is in accordance with guidelines relative to the requirements and classification information set forth in the contract documents.

C. GUIDE SPECIFICATIONS

Guide specifications are model specifications that are prepared by the headquarters of an agency to serve as a guide in the preparation of project specifications by design organizations. Under the traditional approach, guide specifications are, of necessity, very detailed since, after adaptation by the design organization, they become the prime contract document to indicate to the contractor what materials are to be used and how an item is to be constructed or installed.

Under the systems approach, each system supplier would be required to develop detailed specifications and installation guidelines for his system and to submit such specifications and guidelines for approval under the prequalification program (along with application engineering guidelines, test data, and other information). Once approved, a system would in all cases have to be constructed of the materials called for in the system supplier's specification and installed in accordance with the system supplier's installation guidelines. Because these documents would be on file at the central office of each agency and be available from the various suppliers, it is believed that it would be unnecessary to repeat the information in guide specifications. Moreover, keeping guide specifications current would be very difficult if such materials were included since the specifications would have to be revised every time a new system was approved or approval was granted to modify the specification or installation guidelines of a previously approved system. It is therefore believed that detailed information should not be included in guide specifications under the systems approach; instead, it is felt that guide specifications should merely reference the approved document of suppliers.

Guide specifications would, of course, also have to reference the application engineering and quality control guidelines of the supplier and to indicate clearly the responsibilities of the contractor in connection with application engineering and quality control.

D. PREQUALIFICATION PROGRAM

As indicated in previous discussion, implementation of the systems approach requires prequalification of systems by agencies. Prequalification is necessary under the systems approach because system suppliers have very broad responsibility and it would be impossible to evaluate properly the ability of a supplier to carry out his duties and the acceptability of his product on a job-by-job basis. Prequalification is considered by the Committee to be the key to the success of the systems approach. As such, the program under which systems are prequalified must be very carefully conceived and executed.

Actually, there is a precedent for a prequalification program in that a number of agencies have had such a program for underground heat distribution system products for a number of years. The new program being proposed by the Committee is, for reasons that will be explained in subsequent discussion, different in several important respects from the previous one; specifically:

1. The proposed program would require consideration of many matters not covered in the previous program. Under the previous program, system hardware was the only consideration; under the proposed program, the organization of the supplier, application engineering, installation specification, quality control, and maintenance and repair must be considered along with hardware. These additional items have been included primarily because of the broader responsibilities assigned to the system supplier under the systems approach, but also because experience has indicated that such matters can have as great an impact in the performance of a system as the type of hardware used.

2. The instructions to suppliers indicating what information must be provided and the format to be used in submitting such information are more precise under the proposed program than under the previous program. Because suppliers are expected to provide a considerable amount of written material under the proposed program, the Committee believes that precise guidelines indicating how such material is to be presented will be needed in order to facilitate review of proposed brochures by headquarters personnel and use of approved brochures by field personnel, design organizations, and installing contractors.

3. Under the proposed program suppliers are required to develop methods of demonstrating the acceptability of their system component, rather than merely having agency-prescribed tests performed. In addition, under the prescribed program, suppliers are permitted to submit evidence other than test results as proof of acceptability; regardless of the type of proof to be submitted, however, suppliers are expected to obtain agency approval of the general approach to be followed before initiating any final testing program or developing any other information. The Committee elected to have suppliers develop their own methods of demonstrating acceptability for two reasons: first, it believed that most suppliers could do a better job in this area than either the Committee itself or a government agency; and, second,

it wanted to avoid the possibility of an otherwise acceptable system being precluded from qualifying merely because the prescribed test procedures were not directly applicable (which has probably occurred under the previous program). The Committee elected to permit proof other than test results to be submitted as evidence of acceptability in recognition of the facts that tests are sometimes prohibitively expensive, test results are sometimes misleading, and evidence other than test results is sometimes of more value.

4. Under the proposed program, provision has been made for allowing suppliers to obtain approval of system modifications and for permitting agencies to withdraw approval if a supplier or his system performs in an unsatisfactory manner. These provisions have been included to give both suppliers and agencies more freedom to deal with problems than they have had under the previous prequalification program.

The proposed prequalification program could be implemented by each agency individually; however, the Committee believes that both the agencies and suppliers would save time and money if the program were implemented jointly by the agencies.

E. PREQUALIFICATION CRITERIA

In order for the prequalification program to be implemented, criteria against which to evaluate the proposal of a supplier are needed. Specifically, criteria are required for system hardware, application engineering guidelines, installation procedures, quality control procedures, and the supplier's organizational arrangements.

The Committee's recommendations regarding criteria in these areas are discussed in the following paragraphs.

1. System Hardware Criteria

When the Committee first began working on system hardware criteria, it believed that the criteria should be similar to those presented in previous FCC reports on underground heat distribution systems. These, in essence, recommended acceptable levels of performance relative to prescribed detailed test procedures. The Committee soon concluded, however, that this approach should not be used because it would necessitate the development of a very large number of test procedures in order to permit testing of the large variety of system types that the Committee hoped to cover in the criteria and because it would make the criteria test-dependent and, therefore, possibly inapplicable to some new types of system not yet developed.

Instead, the Committee concluded that the criteria should be of a general performance nature. The adoption of this approach was made possible by the development and acceptance of the idea of requiring

suppliers to develop test procedures and/or other methods of demonstrating the acceptability of their products.

The performance criteria developed by the Committee are divided into seven sections: resistance to groundwater infiltration, resistance to water damage, resistance to mechanical or structural damage, resistance to corrosion, resistance to other causes of deterioration, simplicity of installation, and ease of repair.

a. Resistance to Groundwater Infiltration

As indicated previously, water is the primary cause of deterioration of underground heat distribution systems. If a system is to perform satisfactorily, its inherent resistance to groundwater infiltration must be commensurate with the underground water conditions in which the system is located. This fact has long been recognized by most designers and manufacturers of underground heat distribution systems, and a great deal of effort has gone into finding effective methods of keeping groundwater out. As a result of such effort, a variety of designs employing many different materials and combinations of materials has been developed. Although the various systems are different in many respects, the Committee has identified three basic categories that can be used to classify systems: pressure-testable conduit systems, non-pressure-testable conduit systems, and insulating-envelope systems.

In order to protect the carrier pipe and its insulation, pressure-testable conduit systems employ a rigid or semirigid structure (conduit) that is sealed in such a way that it can be internally pressurized with air to verify its tightness. In most cases, pressure-testable conduits are made of steel; however, both cast iron and cement-asbestos have been used in the past and glass-fiber-reinforced plastics are currently being used.

Non-pressure-testable conduit systems also employ a rigid or semirigid protective structure, but one that cannot be pressurized to verify tightness. Non-pressure-testable conduits are or have been made of a wide variety of materials, including clay tiles, poured-in-place concrete, prefabricated concrete pipe section, steel culvert sections, cement-asbestos pipe sections, thermoplastics, and glass-fiber-reinforced plastics. In some cases, non-pressure-testable conduits cannot be pressurized because the material used or the type of joint employed with the material will not hold air pressure. In other cases, some design features of the conduit preclude pressurization.

In insulating-envelope systems the carrier pipe is surrounded by an insulating material that does not require a protective conduit. Some materials used for insulating envelopes (e.g., powdered hydrocarbon and powdered chalk-like mineral) are both strong enough to support earth loads and naturally resistant to

REPRODUCIBILITY OF THE
ORIGINAL PAGE IS POOR

water infiltration, in which case they can be in direct contact with the surrounding earth. Other materials (e.g., insulating concrete, foamed plastic, and foamed glass) are strong enough to support earth loads but are not sufficiently impervious to water infiltration to be placed in direct contact with soil; materials of this type are usually wrapped in a flexible covering of plastic or building felt.

Without disputing the fact that many fine systems can be found in each of the three broad categories, the Committee nevertheless concluded that pressure-testable conduits could be relied on to have the highest resistance to water infiltration and that non-pressure-testable conduits could be relied on to have somewhat higher resistance to water infiltration than insulating envelopes.

On the basis of these conclusions the Committee decided that its criteria should permit pressure-testable systems to be prequalified for use in areas with any groundwater condition classification (i.e., severe, bad, moderate, or mild); that non-pressure-testable systems should be permitted to be prequalified for use only in areas with bad, moderate, or mild water conditions;[5] and that insulating envelopes should be permitted to be prequalified for use only in areas with moderate or mild water conditions.

The differences in the applicability of the three categories of system reflect the Committee's level of confidence that the degree of watertightness of which a system is capable will be achieved in practice and not necessarily the Committee's views on the potential water resistance of a system. For example, the Committee knows that some non-pressure-testable systems can be made as watertight as a pressure-testable system; however, the Committee is also convinced that, in the absence of a field pressure test that demonstrates that complete watertightness has been achieved, there is a good possibility of mistakes being made during installation that could impair the water resistance of a system. That this is the case is indicated by the fact that small leaks are often found during pressure tests of a pressure-testable system even though the system was installed with care by experienced workmen.

The resistance to water infiltration of all systems in a given category is not, of course, the same. Similarly, sites with different groundwater conditions do not require the same degree of resistance to water infiltration. In light of these obvious truths, the Committee has established different criteria for

---

[5]With bad water conditions the criteria requires that non-pressure-testable conduit be of a type that is factory fabricated in sections at least 10 feet long.

the three categories of system for various groundwater condition classifications. In the case of pressure-testable systems, the criteria is related to the test pressure used. In the case of non-pressure-testable conduits and insulating envelopes, the criteria is related to the head of water (in feet) that a system can resist. The criteria for these latter two categories of system also recognize the inherent benefits of groundwater drainage systems that, if properly designed and installed, will serve to lower the groundwater level in the area of the underground heat distribution system.

Resistance to groundwater infiltration is almost as important for manholes as it is for conduits and insulating envelopes. In fact, the Committee has seen several systems that appeared to have been ruined by water flowing into conduits from flooded manholes. The Committee also has seen innumerable manholes where flooding has resulted in badly corroded piping, valves, and traps and wet or deteriorated insulation. The dollar loss in terms of heat loss and ruined materials in such manholes is very high. Equally bad is the fact that such manholes are usually so hot that workmen avoid entering them to perform routine inspections and maintenance, jeopardizing the entire system of which the manholes are a part.

In recognition of the importance of dry manholes, the Committee has recommended groundwater-infiltration-resistance criteria for manholes that are similar to the criteria for conduits and insulating envelopes.

b. Resistance to Water Damage

Committee experience indicates that, regardless of how carefully a system is designed and installed, a high probability exists that sometime during the system's life water is going to get into a conduit or insulating envelope--either as a result of groundwater infiltration or a carrier pipe leak. Based on this premise--which seems irrefutable since nothing man-made is perfect--the Committee concluded that some means of coping with this eventuality would have to be incorporated in every conduit and insulating envelope.

After reviewing the various design concepts for underground heat distribution systems that have been developed by manufacturers, the Committee further concluded that there are basically two acceptable means of coping with water after it gets into a conduit or insulating envelope:

(1) The conduit or insulating envelope can be designed in such a way that the water can be drained out and the interior of the conduit or insulating envelope dried so that the effectiveness of the insulation is restored to its original value. Systems that are designed on the basis of this concept are frequently referred to as drainable-and-dryable

systems. The drainable-and-dryable concept has been used for many years, and the validity of the approach has been amply demonstrated. The Committee has, for example, seen systems more than 40 years old that are still functioning satisfactorily, even though they leak badly, because they can be drained and dried readily. (This fact does not alter the Committee's belief that systems should have a high resistance to water infiltration.)

(2) Alternately, the conduit or insulating envelope can be designed in such a way that any water that gets in will not spread, in either liquid or vapor form, throughout the system. This concept is considered acceptable by the Committee on the grounds that the complete loss of a small portion of a system can be tolerated as long as such losses are infrequent, whereas the complete loss of an entire section of a system--which could occur in a system that is neither drainable or dryable in place nor designed to limit water spread--is usually intolerable. The efficacy of the concept of limiting water spread has not been as amply demonstrated as the drainable-and-dryable approach; however, the concept is theoretically sound and several manufacturers are marketing apparently successful systems that, either implicitly or explicitly, are based on the concept of limiting water spread.

Accordingly, the Committee has developed criteria for judging whether a system designed on the basis of either the drainable-and-dryable or water-spread-limiting concept is acceptable as regards resistance to water damage. The two concepts are considered equally acceptable for use in areas with bad, moderate, or mild underground water conditions, but only the drainable-and-dryable concept is considered acceptable for use in areas with severe underground water conditions because the Committee believes the validity of the drainable-and-dryable concept has been better demonstrated.

In the case of drainable-and-dryable systems and manholes it is also important that the components and materials used be capable of withstanding the effects of being submerged in boiling water since, in the event of flooding, they will usually be emersed in water that is heated to 212 °F. For this reason, the Committee has developed criteria for resistance to boiling water.

Although the Committee's criteria regarding resistance to groundwater infiltration and resistance to water damage are basically of a performance nature, some types of system are not considered suitable for use with certain underground water conditions. Such limitations on the applicability of various types of system have been discussed in this and the preceding section; for convenience, the Committee's views regarding the suitability of various types of system for use with different groundwater conditions are summarized in Table 4.

TABLE 4 Types of System Suitable for Use with Various Underground Water Conditions

Underground Water Condition	Suitable Types of System Relative to Resistance to Groundwater Infiltration	Suitable Types of System Relative to Resistance to Water Damage
Severe	Air-pressure-testable conduit (15 psig minimum test pressure)	Drainable and dryable
Bad	Air-pressure-testable conduit (15 psig minimum test pressure)	Drainable and dryable
	or	or
	Prefabricated non-air-pressure-testable conduit (capable of resisting a 20 ft head of water)	Water-spread limiting
Moderate	Air-pressure-testable conduit (7-1/2 psig minimum test pressure)	Drainable and dryable
	or either a	or
	Non-air-pressure-testable conduit or an insulating envelope (capable of resisting a 5 ft head of water if a groundwater drainage system is not employed or a 2 ft head of water if a groundwater drainage system is employed)	Water-spread limiting
Mild	Air-pressure-testable conduit (7-1/2 psig minimum test pressure)	Drainable and dryable
	or either a	or
	Non-air-pressure-testable conduit or an insulating envelope (capable of resisting a 1 ft head of water)	Water-spread limiting

REPRODUCIBILITY OF THE ORIGINAL PAGE IS POOR

c. Resistance to Mechanical or Structural Damage

In the absence of an imperfection in the conduit or insulating envelope or manhole or in the carrier piping, water can gain entry to the interior of a system only if the conduit or insulating envelope or manhole or carrier piping fails in service. Among the many possible causes of such failure are mechanical and structural damage. In order to preclude such damage a system must be designed to accommodate the structural loads and mechanical forces that will be encountered after installation. Accordingly, the Committee has recommended that a system and all its components be resistant to damage due to the loads and forces normally imposed on them under operating conditions, for example:

- Earth loads, from the weight of the backfill over the system.
- Superimposed loads, from, for example, vehicles being driven over the earth above or beside the system.
- Thermal stresses (or movement) due to temperature changes as the fluid being distributed through the system is periodically turned on and shut off.
- Internal stresses due to pressurization of the distributed fluid.
- Internal loads due to the weight of the distributed fluid.

Such forces and loads can be satisfactorily accommodated in a variety of ways. The criteria developed by the Committee does not stipulate how a system supplier will design his system; rather the criteria is intended to ensure that the system supplier has taken such forces and loads into account in the design of his system and has developed workable solutions.

d. Resistance to Corrosion

Leaks in ferrous-metal conduits and manholes also can develop as a result of corrosion. In order to minimize the chance of external corrosion (i.e., corrosion originating on the outside surface of the conduit or manhole), the Committee believes that all ferrous-metal conduits and manholes must be provided with an exterior coating that will last at least 25 years--the minimum service life expected of most systems--when placed underground and exposed to high temperatures. Such a coating is considered necessary even if a cathodic protection system is used in order to hold to a reasonable level the current flow required for cathodic protection.

e. Resistance to Other Causes of Deterioration

Some materials that are or could be used in underground heat distribution systems are susceptible to deterioration from causes other than those discussed thus far. For example, asbestos cement can deteriorate when buried in low pH soil, and some plastics are susceptible to termite attack and to deterioration when exposed to high heat. The Committee believes that a supplier can legitimately be required to demonstrate either that the materials he proposes to use are naturally resistant to deterioration from all conditions associated with use in an underground heat distribution system or that, by some design feature of the system, a susceptible material is protected from such deterioration.

f. Simplicity of Installation

Regardless of how carefully a system is designed and how high the quality of the materials used, it will almost certainly be problem ridden and/or give unsatisfactory service if it cannot be installed under field conditions by craftsmen with ordinary skills. The importance of easy installability has been demonstrated by the fact that systems in which adhesive-bonded joints have been used have frequently encountered difficulties--not because the adhesive used was inadequate, but rather because the environmental conditions required for development of a good bond could not be maintained under construction site conditions and/or because the workmen employed were not experienced in the use of adhesives. For similar reasons, systems involving field lay-up of glass-fiber-reinforced plastic also have experienced numerous problems. Because of such experience, the Committee believes that a system supplier should be required to demonstrate that his system can be easily installed. It should be emphasized that the Committee does not believe that the use of all new materials and installation techniques should be ruled out; the Committee does believe, however, that materials and installation techniques that depend on the maintenance of conditions and the availability of workmen not ordinarily found on a construction site should not be used.

g. Ease of Repair

As with most things man-made, there is no such thing as a perfect, trouble-free underground heat distribution system. Because of this, it can be assumed that most systems will have to be repaired at some time and all systems will require some maintenance. Since delaying maintenance or repair of underground heat distribution systems results in higher operating costs and possibly rapid and irreversible deterioration of the entire system, it is considered essential that every system lend itself to easy maintenance and repair. For example, it should be possible with any system to readily locate a leak in either carrier piping or the conduit/insulating envelope and to

either repair or replace the item that has failed. It should also be possible with any system to enter manholes at any time to perform routine maintenance and inspections. The importance of this aspect of system design cannot be overstated; Committee experience indicates that many systems have had to be replaced only because they were not inspected regularly and maintained properly and that too often the reason was that manholes were too hot to enter.

2. System Application Criteria

In accordance with its belief that the system supplier is in the best position to know how his system should be applied, the Committee has not developed exhaustive criteria relating to the application engineering guidelines of a supplier. However, the Committee has developed criteria for a few aspects of application engineering that are believed to be of particular importance. The most significant of these are discussed below.

a. Because its experience indicates that pipe loops are virtually trouble-free and expansion joints sometimes require maintenance and/or occassionally malfunction, the Committee believes that wherever possible pipe loops rather than expansion joints should be used to accommodate expansion and contraction.

b. Because its experience indicates that manhole walls have frequently failed when subjected to expansion forces, the Committee believes that, unless an expansion joint is to be installed in a manhole, pipe anchors should be located immediately outside of manhole walls in order to reduce to a minimum the amount of force imposed on the wall and that the manhole walls themselves should never be used as pipe anchors. (The Committee is aware that a manhole wall could be made strong enough to serve as an anchor; however, the cost would be high and there would always be a chance that a mistake might be made in the design or construction of the wall.)

c. Because its experience indicates that condensate lines fail much sooner than other lines installed in underground heat distribution systems, the Committee believes that condensate lines generally should not be installed in the same conduit or insulating envelope with other lines; i.e., condensate lines that are not to be insulated should be buried directly and condensate lines that are to be insulated should be installed in a separate conduit so that a leak developing in a condensate line will not affect any other lines. The Committee believes, however, that exceptions to this rule could be made for concrete trench systems because the cost of building a separate concrete trench for a condensate line would be prohibitively high and for loose-fill insulating envelopes because the cost of repairs with such systems is comparatively low.

d. Because experience has indicated that long system life depends on periodic inspection and maintenance and this, in turn, depends on workmen being able to enter manholes readily, the Committee believes that manholes should be of ample size, that all piping and valves in manholes should be insulated to hold down the temperature in the manholes (and to minimize heat loss), that all such insulation should be covered with a sheet metal jacket to prevent mechanical damage, and that all manholes should be equipped with automatic pumps to preclude flooding.

e. Since ferrous-metal conduits and manholes can be rapidly destroyed by corrosion when located in corrosive soils, the Committee believes that a cathodic protection system, especially designed for the application, should be provided whenever ferrous-metal conduits or manholes are to be used at sites classified as either corrosive or mildly corrosive. The cathodic protection system can be omitted, however, with mildly corrosive soils if ferrous items have a hot-dipped galvanized coating of at least 2 ounces per square foot since galvanizing is basically a form of cathodic protection.

3. Installation Criteria

As in the case of application engineering, the Committee has not developed detailed criteria relating to installation since it believes that the supplier is in the best position to indicate how his system should be installed. However, if industry standards and/or federal agency specifications dealing with a particular installation operation exist, it is expected that the practices called for in such specifications and/or standards will be followed by the supplier.

4. Quality Control Criteria

While good quality control is desirable in connection with any manufacturing or construction operation, it is vital for underground heat distribution systems because the system is buried and mistakes or imperfections will be hidden and because even a relatively minor problem can result in serious and/or extensive damage if it ultimately permits water to enter the system. Because of the importance it attaches to quality control, the Committee has developed relatively stringent criteria for judging the suitability of a supplier's quality control guidelines. Basically, the Committee's criteria require 100 percent testing and/or inspection of prefabricated system components at the factory by the system supplier; testing and/or inspection of both system components and the complete system at the site by, or under the supervision of, the system supplier; and observation of all installation operations by the system supplier. Similar quality control efforts for underground heat distribution systems have been required for a number of years by several federal agencies, and it is their belief that the benefits more than offset the extra cost associated with the effort.

5. Criteria for a System Supplier's Organization

In the final analysis, the systems approach, like the traditional approach, depends on qualified people doing their jobs in a conscientious manner. Regardless of the soundness of the basic concept or the preciseness of the technical criteria, the systems approach will work only if the various organizations involved are able to carry out adequately their responsibilities under the systems ap-approach.

The Committee is concerned that all participating organizations be able to perform satisfactorily; it is, however, particularly concerned about the organizational capabilities of the system supplier since, under the systems approach, his responsibilities are much broader than they are under the traditional approach and many potential system suppliers currently do not have the expertise needed to meet such responsibilities. In recognition of this fact, the Committee has developed criteria dealing with the organizational arrangement and capabilities of a system supplier. The primary purpose of the criteria is the same as that of the criteria discussed in previous sections--namely, to permit agencies to evaluate the proposal of a potential supplier.

Basically, the criteria require that a system supplier have the following organizational capabilities, in addition to the usual product engineering and production capabilities: application engineering, factory quality control, field inspection, and maintenance and repair service. On the grounds that some suppliers currently do not have the personnel needed to perform some or all of these functions and may not be willing or able to hire them, the criteria permits suppliers to retain private professional firms to do application engineering and field inspection work and to franchise service companies to provide maintenance and repair services--providing the organizations are retained or franchised on a continuing basis and have the training and experience necessary to perform their duties.

APPENDIX A
DETERMINATION OF UNDERGROUND WATER CONDITIONS

When complete and accurate records on the underground water conditions at a site exist, the classification of a site with regard to underground water conditions should be made on the basis of such records. When such records do not exist, a detailed site classification survey should be made. This survey should be conducted within the framework of the following guidelines:

1. The survey should be made after the general layout of the system has been determined, should cover the entire length of the proposed system, and should be made by a soils engineer with specialized knowledge of geology and groundwater hydrology.

2. If at all possible, the survey should be conducted during the time of the year when the groundwater table is at its highest point; if this is not possible, water table measurements should be corrected, on the basis of professional judgment, to indicate conditions likely to exist at the time of year when the water table is at its highest point.

3. As a minimum, information on groundwater conditions, soil types, terrain, and precipitation rates/irrigation practices in the area of the system should be collected.

4. Information on terrain and precipitation rates/irrigation practices may be obtained from available records at the installation.

5. Information on groundwater conditions and soil types should be obtained through borings, test pits, or other suitable exploratory means. Generally, a boring or test pit should be made at least every 100 feet along the line of the proposed system, and each exploratory hole should extend to a level at least 5 feet below the anticipated elevation of the bottom of the system. If a significant difference in underground conditions is found at adjacent exploratory points, additional explorations should be made between those points in order to determine more precisely where the change occurs.

Upon completion of the survey, each exploration point should be classified as A, B, C, or D on the basis of the criteria presented in Table A-1. When doubt exists as to the proper classification of a point, the next higher classification should be assigned; e.g., if a certain point could be considered either B or C, it should be assigned a B classification. These decisions, like many engineering decisions, frequently will require the exercise of judgment on the part of the responsible engineer.

PRECEDING PAGE BLANK NOT FILMED

TABLE A-1 Site Classification Criteria

Site Class	General Conditions Required for Such Classification	Conditions Found During Site Classification Survey that are Indicative of the Class			
		Relative to Water Table Level	Relative to Surface Water Accumulation		
			Soil Types[a]	Terrain	Precipitation Rates or Irrigation Practices in Area
A--Severe	Water table frequently above bottom of the system	Groundwater within 1 ft of bottom of system	Any	Any	Any
	Water table occasionally above bottom of the system and surface water accumulates and remains for long periods in soil surrounding the system	Groundwater within 5 ft of bottom of system	GC, SC, CL, CH, OH	Any	Any
B--Bad	Water table occasionally above bottom of the system and surface water accumulates and remains either for short periods in soil surrounding the system	Groundwater within 5 ft of bottom of system	GW, GP, SW, SP	Any	Any
			GM, SM, ML, OL, MH		
	Water table never above the bottom of the system, but surface water accumulates and remains for long periods in soil surrounding the system	No groundwater encountered	GC, SC, CL, CH, OH	Any	Equivalent to 3 in. or more in any one month or 20 in. or more in one year
C--Moderate	Water table never above the bottom of the system, but surface water accumulates and remains for short periods in soil surrounding the system	No groundwater encountered	GM, SM, ML, OL, MH	Any	Equivalent to 3 in. or more in any one month or 20 in. or more in one year
			GC, SC, CL, CH, OH	Any except low areas	Equivalent to less than 3 in. in any one month and to less than 20 in. in one year
D--Mild	Water table never above the bottom of the system and surface water does not accumulate and remain in soil surrounding the system	No groundwater encountered	GW, GP, SW, SP	Any	Any
			GM, SM, ML, OL, MH	Any except low areas	Equivalent to less than 3 in. in any one month and to less than 20 in. in one year

[a]See Table A-2.

TABLE A-2 Soil Classifications

FIELD IDENTIFICATION PROCEDURES (Excluding particles larger than 3 inches and basing fractions on estimated weights)						GROUP SYMBOLS (1)	TYPICAL NAMES	PERMEABILITY WHEN COMPACTED
COARSE GRAINED SOILS More than half of material is *larger* than No. 200 sieve size (The No. 200 sieve size is about the smallest particle visible to the naked eye)	GRAVELS More than half of coarse fraction is larger than No. 4 sieve size. (For visual classifications, the ¼" size may be used as equivalent to the No. 4 sieve size.)	CLEAN GRAVELS (Little or no fines)	Wide range in grain size and substantial amounts of all intermediate particle sizes.			GW	Well graded gravels, gravel-sand mixtures, little or no fines.	Pervious
			Predominantly one size or a range of sizes with some intermediate sizes missing.			GP	Poorly graded gravels, gravel-sand mixtures, little or no fines.	Very Pervious
		GRAVELS WITH FINES (Appreciable amount of fines)	Non-plastic fines (for identification procedures see ML below).			GM	Silty gravels, poorly graded gravel-sand-silt mixtures.	Semipervious to Impervious
			Plastic fines (for identification procedures see CL below).			GC	Clayey gravels, poorly graded gravel-sand-clay mixtures.	Impervious
	SANDS More than half of coarse fraction is smaller than No. 4 sieve size.	CLEAN SANDS (Little or no fines)	Wide range in grain sizes and substantial amounts of all intermediate particle sizes.			SW	Well graded sands, gravelly sands; little or no fines.	Pervious
			Predominantly one size or a range of sizes with some intermediate sizes missing.			SP	Poorly graded sands, gravelly sands; little or no fines.	Pervious
		SANDS WITH FINES (Appreciable amount of fines)	Non-plastic fines (for identification procedures see ML below).			SM	Silty sands, poorly graded sand-silt mixtures.	Semipervious to Impervious
			Plastic fines (for identification procedures see CL below).			SC	Clayey sands, poorly graded sand-clay mixtures.	Impervious
FINE GRAINED SOILS More than half of material is *smaller* than No. 200 sieve size.	IDENTIFICATION PROCEDURES ON FRACTION SMALLER THAN No. 40 SIEVE SIZE							
	SILTS AND CLAYS Liquid limit less than 50		DRY STRENGTH (CRUSHING CHARACTERISTICS)	DILATANCY (REACTION TO SHAKING)	TOUGHNESS (CONSISTENCY NEAR PLASTIC LIMIT)			
			None to slight	Quick to slow	None	ML	Inorganic silts and very fine sands, rock flour, silty or clayey fine sands with slight plasticity.	Semipervious to Impervious
			Medium to high	None to very slow	Medium	CL	Inorganic clays of low to medium plasticity, gravelly clays, sandy clays, silty clays, lean clays.	Impervious
			Slight to medium	Slow	Slight	OL	Organic silts and organic silt-clays of low plasticity.	Semipervious to Impervious
	SILTS AND CLAYS Liquid limit greater than 50		Slight to medium	Slow to none	Slight to medium	MH	Inorganic silts, micaceous or diatomaceous fine sandy or silty soils, elastic silts.	Semipervious to Impervious
			High to very high	None	High	CH	Inorganic clays of high plasticity, fat clays.	Impervious
			Medium to high	None to very slow	Slight to medium	OH	Organic clays of medium to high plasticity.	Impervious
HIGHLY ORGANIC SOILS			Readily identified by color, odor, spongy feel and frequently by fibrous texture.			Pt	Peat and other highly organic soils.	

(1) *Boundary classifications*: Soils possessing characteristics of two groups are designated by combinations of group symbols. For example GW-GC, well graded gravel-sand mixture with clay binder.

SOURCE: Adapted from Figures 7 and 8; U.S. Department of the Interior, *Earth Manual*, 1st rev. ed., (Washington, D.C.: U.S. Government Printing Office, 1968).

APPENDIX B
PROCEDURE FOR DETERMINING THERMAL INSULATION REQUIREMENTS OF UNDERGROUND HEAT DISTRIBUTION SYSTEMS[1]

For many years, federal agencies included in specifications for underground heat distribution systems a table indicating the thickness of insulation to be provided for pipes of various diameters with insulations having various k factors. The table was developed on the basis of a series of economic analyses, assuming insulation surrounded by air. At the time the table was prepared it was recognized that this was not a valid assumption because it ignored the insulating effect of the soil; however, sufficient data were not available at the time the table was developed to permit the soil factor to be considered.

Subsequently, the National Bureau of Standards (NBS) conducted a series of studies on heat transfer from underground shelters for the Office of Civil Defense. The results of these studies appeared applicable to the problem of heat transfer from underground piping, and several federal agencies requested NBS to develop procedures, based on its Civil Defense work, for determining the proper amount of insulation to use in underground heat distribution systems.

The procedure presented in this appendix is an abbreviated version of the results of that NBS study. The complete results of the study are presented in an NBS Report No. 10194, *Heat Transfer Analysis of Underground Heat Distribution Systems* (April 9, 1970).

The procedure presented in this appendix essentially provides a means of determining, through an economic analysis, the maximum permissible heat loss value that should be specified in contract documents for underground heat distribution systems. It is believed that maximum permissible heat loss should be specified, rather than inches of insulation, because under the systems approach the system supplier is free to provide a wide variety of insulating materials in different configurations and combinations and it would be impractical to calculate and list the desired thickness of insulation for all possible systems.

Under the procedure, the maximum permissible heat loss value is determined as the optimum average rate of heat loss for a given set of conditions.

---

[1]The procedure was developed by T. Kusuda of the National Bureau of Standards based on extensive experimental and theoretical studies of heat transfer from underground pipes.

The optimum average rate of heat loss is defined as that heat loss rate for which the total owning and operating cost of the system is at a minimum.

In essence, the procedure requires that a designer calculate the total owning and operating cost of different sections of the system, assuming use of one particular type of system with various thicknesses of insulation. Only one type of system needs to be considered because the optimum heat loss rate in a particular set of circumstances is not very different for different types of system. As illustrated in Figure B-1 the total owning and operating cost of a system is represented by a "U" shaped curve when cost is plotted against heat loss--which is a function of insulation thickness. This curve is the sum of three other curves: the owning cost curve, which increases as heat loss decreases; the operating cost curve, which increases as heat loss increases; and the maintenance cost curve, which is constant within limits regardless of heat loss. The lowest point on the "total-cost" curve is the minimum total owning and operating cost for the system, and the heat loss for the point is the optimum heat loss for the system. When such total cost curves were generated for various types of system for a particular hypothetical site, it was found that the point of optimum heat loss was approximately the same for all systems even though the total cost of owning and operating the different systems was markedly different, as illustrated in Figure B-2. The obvious conclusion was that, if insulation requirements are stated in terms of heat loss, it is not necessary to calculate the insulation requirements for all systems. When the optimum heat loss is determined for one system, all systems can, with justification, be required to have sufficient insulation to give that heat loss or less.

The procedure presented, in a step by step form below, is applicable to three commonly encountered situations:

1. Where a single insulated or uninsulated pipe is separated a considerable distance from any other pipe (e.g., 10 feet or more).

2. Where two pipes (either, neither, or both of which are insulated) are installed side-by-side underground.

3. Where two pipes (either, neither, or both of which are insulated) are installed in a common underground structure (i.e., a single conduit/envelope).

Procedures for determining optimum heat loss in more complex situations (e.g., where a chilled-water line is located in the vicinity of pipes carrying heated fluid) are discussed in the NBS report mentioned previously.

<u>Step 1</u> After the general layout of the system has been made and the site and application conditions have been determined, size the system carrier piping assuming a 2 percent heat loss from the supply line at maximum flow.

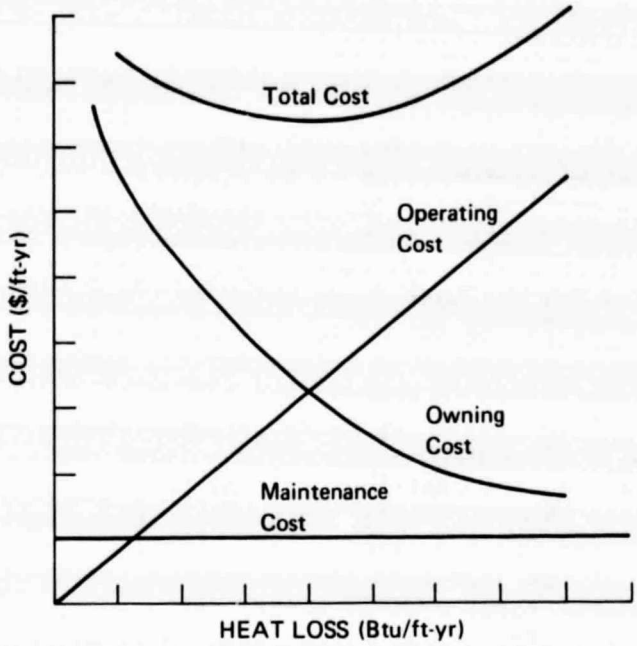

FIGURE B-1 Relation between heat loss and system costs.

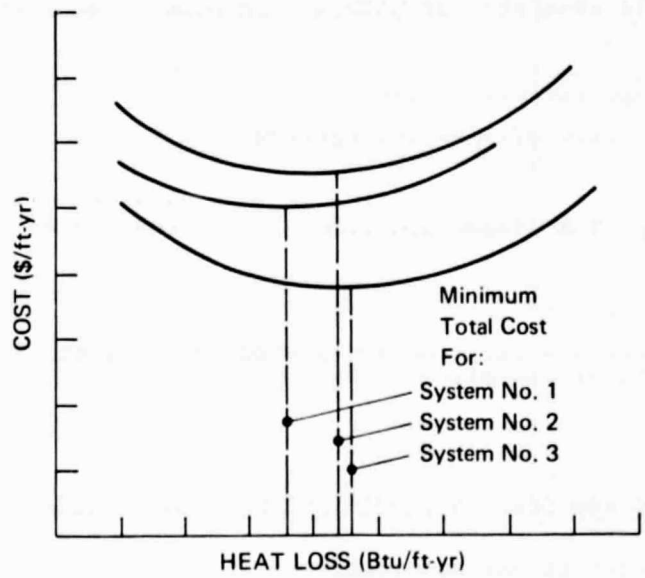

FIGURE B-2 Total cost of owning and operating three hypothetical systems.

Step 2 Select one particular type and configuration of system,[2] which is relatively low in first cost and is approved for use with the site and application conditions identified, to use as a model in making the economic analysis.

Step 3 Determine separately, for each section of the system, the installed cost per foot of the system with each of the applicable combinations of insulation thicknesses shown in Table B-1. The cost of all components, other than manholes, called for in the approved application manual for the selected system should be included in the cost estimate. Where the table indicates that zero thickness of insulation is to be assumed for a return or condensate line, it should also be assumed that the bare pipe will be buried directly in earth--i.e., it will not be located in the supply line conduit. If only one pipe is to be installed (i.e., either a supply or return, but not both) use only the appropriate column from the table for that type of pipe. Whenever possible, cost figures should be obtained from the supplier of the system being used as a model.

Step 4 Determine the annual owning cost per foot of each section of the system with each of the different thicknesses of insulation called for in Table B-1, using the following equation:

$$\text{Owning Cost (\$/ft-yr)} = \frac{\text{Installed Cost (\$/ft)}}{\text{Series Present Worth Factor}}$$

The series present worth factor[3] can be obtained from any set of interest tables, given the annual interest rate (or rate of return) and the number of years over which the cost is to be amortized (i.e., the economic life of the item). In the case of underground heat distribution systems, an economic life of 25 years should be assumed unless the agency specifically directs that some shorter time be used; the proper interest rate to use should be obtained from the agency.

Step 5 Calculate separately for each pipe in each section of the system the heat loss per linear foot, assuming the various thicknesses of insulation called for in Table B-1, using Calculation Procedure I (Figure B-3) for a single-pipe system, Calculation Procedure II (Figure B-4) for a two-pipe system where the pipes are not in the same conduit/insulating envelope, and Calculation Procedure III (Figure B-5) for a two-pipe system where the pipes are in the same conduit/insulating envelope.

---

[2]A pressure-testable steel conduit system would be an example of a particular type of system; separate supply and return conduits would be one possible configuration.

[3]The series present worth factor is the reciprocal of the capital recovery factor.

TABLE B-1 Insulation Thicknesses To Be Assumed in Calculations

	With High Temperature Water (above 250 °F)		With Low Temperature Water (250 °F and lower)		With Steam (any pressure)	
Thermal Conductivity of Insulation (Btu/hr, ft^2, °F/in.)	On the Supply Line	On the Return Line	On the Supply Line	On the Return Line	On the Steam Line	On the Condensate Line
Up to 0.2	1/2	1/2	1/2	0	1/2	0
	1	3/4	1/2	1/2	1/2	1/2
	1	1	1	1/2	1	0
	1-1/2	1	1	3/4	1	3/4
	1-1/2	1-1/2	1-1/2	3/4	1-1/2	0
	-	-	1-1/2	1	1-1/2	1
>0.2 to 0.4	3/4	3/4	3/4	0	3/4	0
	1-1/2	1	3/4	3/4	3/4	3/4
	1-1/2	1-1/2	1-1/2	3/4	1-1/2	0
	2-1/2	2	1-1/2	1	1-1/2	3/4
	2-1/2	2-1/2	2	1	2-1/2	0
	-	-	2	1-1/2	2-1/2	1-1/2
>0.4 to 0.6	2	2	2	0	2	0
	3	2	2	2	2	2
	3	3	3	2	3	0
	4	2	3	3	3	2
	4	4	4	2	4	0
	-	-	4	4	4	2
>0.6	3	3	3	0	3	0
	4	3	3	3	3	3
	4	4	4	3	4	0
	5	3	4	4	4	3
	5	5	5	3	5	0
	-	-	5	4	5	3

FIGURE B-3 Computational Procedure I. Heat loss from a single-pipe system.

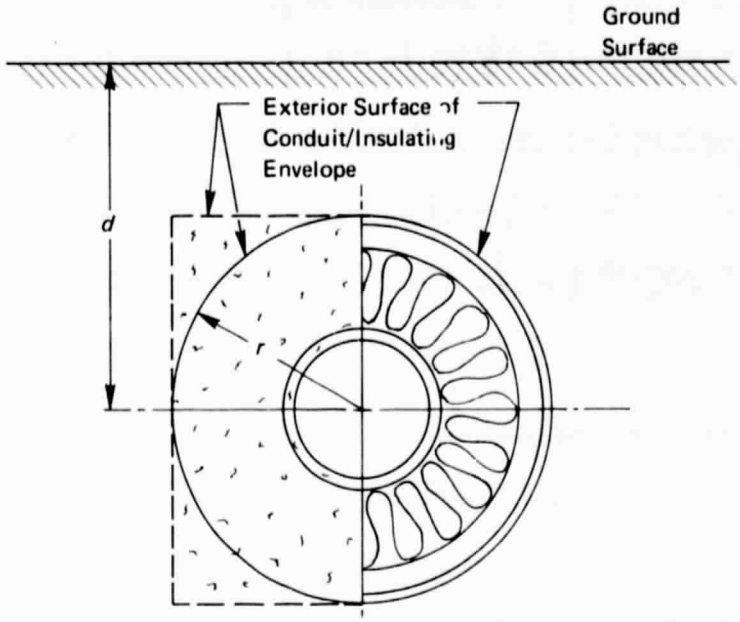

Required Data:

d, depth of burial, inches

r, radius of the system (to the exterior surface of the system*), inches

T_G, earth temperature, °F (see p. 64)

K_s, earth thermal conductivity, Btu/hr, in.† (see p. 75)

C, system thermal conductance‡, Btu/hr, °F (ft of pipe) (see approved brochure of system supplier)

T_f, temperature of fluid being distributed, °F.

---

*For directly buried bare pipes, r is the outside radius of the pipe.

†Btu/hr = Btu/hr, ft^2, °F; Btu/hr, in. = Btu/hr., ft^2, °F/in.

‡Contrary to convention, conductance in this report is related to linear feet of pipe rather than square feet of surface.

Calculations:

1. System or pipe heat transfer factor:

$$\frac{1}{K_p} = \frac{1}{C} + \frac{12}{2\pi K_s} \ln \left\{ \frac{d}{r} + \sqrt{\left(\frac{d}{r}\right)^2 - 1} \right\},$$

or when $\frac{d}{r} >> 1$,

$$\frac{1}{K_p} = \frac{1}{C} + \frac{12}{2\pi K_s} \ln \left(\frac{2d}{r} \right).$$

2. System or pipe heat loss:

$$Q = K_p \ (T_f - T_G) \text{ Btu/hr, ft.}$$

FIGURE B-4 Computational Procedure II. Heat loss from a two-pipe system with pipes in separate conduits/envelopes.

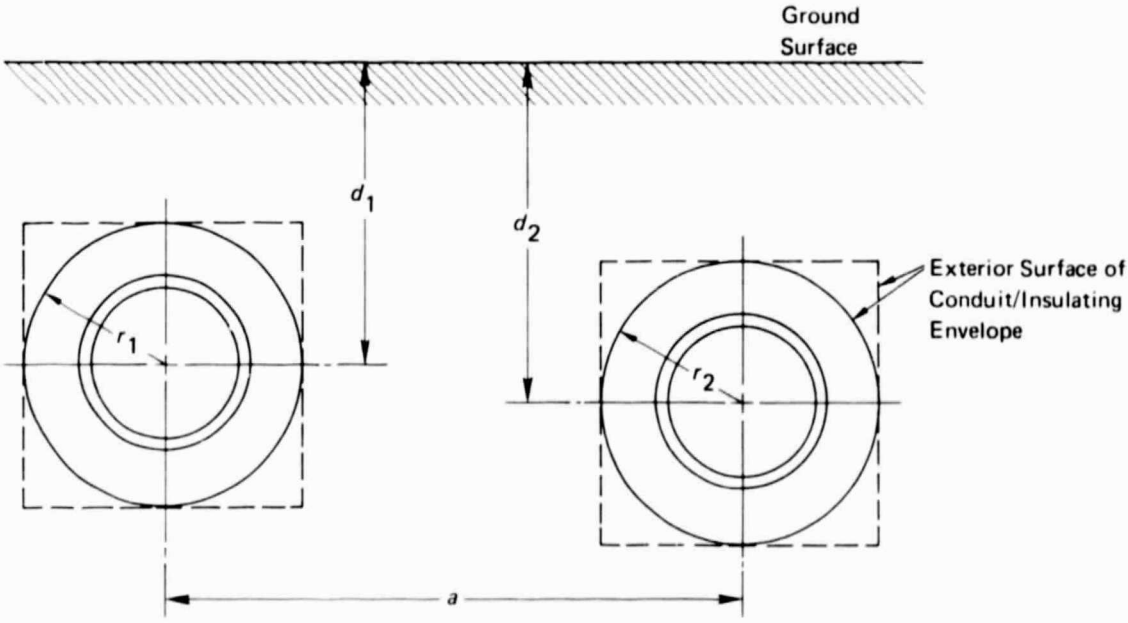

Required Data:

d_1, depth of burial, pipe No. 1, inches

d_2, depth of burial, pipe No. 2, inches

r_1, radius of the system,* pipe No. 1, inches

r_2, radius of the system,* pipe No. 2, inches

T_G, earth temperature, °F (see p. 64)

K_s, earth thermal conductivity, Btu/hr, in. (see p. 75)

C, system thermal conductance, Btu/hr, °F, (ft of pipe) (see approved brochure of system supplier)

T_{f1}, temperature of fluid being carried in pipe No. 1, °F

T_{f2}, temperature of fluid being carried in pipe No. 2, °F

a, center-to-center distance between pipes Nos. 1 and 2, inches

Calculations:

1. Let:

$$P_{11} = 1 + \frac{12C_1}{2\pi K_s} \ln\left(\frac{2d_1}{r_1}\right),$$

$$P_{12} = \frac{12C_1}{2\pi K_s} \ln\sqrt{\frac{a^2 + (d_1 + d_2)^2}{a^2 + (d_1 + d_2)^2}},$$

$$P_{21} = \frac{12C_1}{2\pi K_s} \ln\sqrt{\frac{a^2 + (d_1 + d_2)^2}{a^2 + (d_1 + d_2)^2}},$$

$$P_{22} = 1 + \frac{12C_2}{2\pi K_s} \ln\left(\frac{2d_2}{r_2}\right),$$

and

$$\Delta = P_{12} P_{21} - P_{11} P_{22}.$$

2. Pipe heat transfer factors:

$$K_{p1} = \frac{C_1}{\Delta} (P_{12} - P_{22}),$$

and

$$K_{p2} = \frac{C_2}{\Delta} (P_{21} - P_{11}).$$

---

*For directly buried bare pipes, r is the outside radius of the pipe.

3. Equivalent pipe temperatures:

$$T_{p1} = \frac{P_{12}\,T_{f2} - P_{22}\,T_{f1}}{P_{12} - P_{22}} ,$$

and

$$T_{p2} = \frac{P_{21}\,T_{f1} - P_{11}\,T_{f2}}{P_{21} - P_{11}} .$$

4. Pipe heat loss Btu/hr, ft:

$$Q_1 = K_{p1}\,(T_{p1} - T_G),$$

and

$$Q_2 = K_{p2}\,(T_{p2} - T_G).$$

FIGURE B-5 Computational Procedure III. Heat loss from a two-pipe system with pipes in the same conduit/envelope.

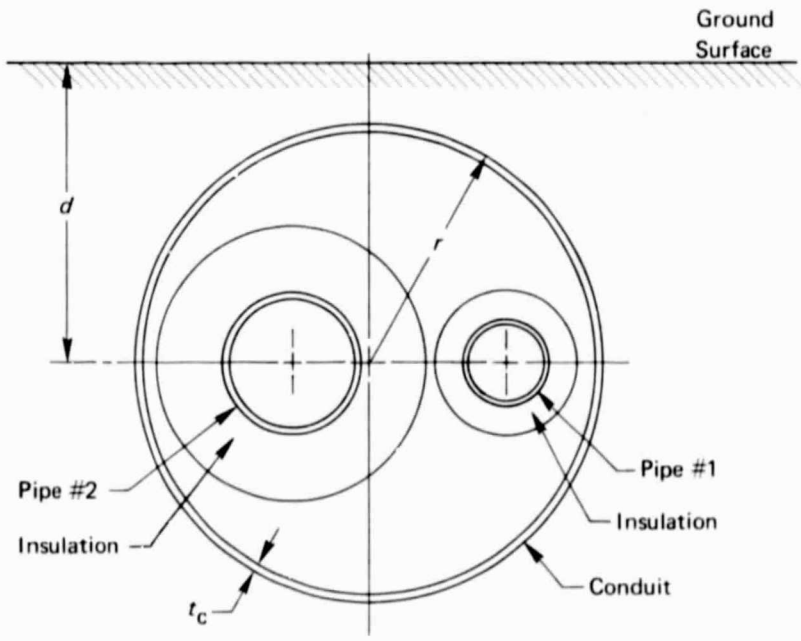

Required Data:

d, depth of burial, inches

r, radius of the system (to the exterior surface of the system), inches

T_G, earth temperature, °F (see p. 64)

K_s, earth thermal conductivity, Btu/hr, in. (see p. 75)

C_a, thermal conductance of conduit air space, Btu/hr, °F (ft of pipe) (normally 3.0)

C_1, thermal conductance of pipe No. 1 plus insulation, Btu/hr, °F (ft of pipe), (see approved brochure of system supplier)

C_2, thermal conductance of pipe No. 2 insulation, Btu/hr, °F (ft of pipe)

t_c, conduit wall thickness, inches

K_c, conduit wall thermal conductivity, Btu/hr, in. (see approved brochure of system supplier)

T_{f1}, temperature of fluid being carried in pipe No. 1, °F

T_{f2}, temperature of fluid being carried in pipe No. 2, °F.

Calculations:

1. Let:

$$\frac{1}{P_0} = \frac{12}{2\pi}\left[\frac{1}{K_c}\ln\left(\frac{r}{r-t_c}\right) \frac{1}{K_s}\ln\left\{\frac{d}{r} + \sqrt{\frac{d^2}{r} - 1}\right\}\right],$$

$$\frac{1}{P_1} = \frac{1}{C_1} + \frac{1}{C_a},$$

$$\frac{1}{P_2} = \frac{1}{C_2} + \frac{1}{C_a}.$$

2. Pipe heat transfer factors:

$$K_{p1} = \frac{P_1 P_0}{P_0 + P_1 + P_2},$$

and

$$K_{p2} = \frac{P_2 P_0}{P_0 + P_1 + P_2}.$$

3. Equivalent pipe temperatures:

$$T_{p1} = \left(1 + \frac{P_a}{P_0}\right) T_{f1} - \frac{P_2}{P_0} T_{f2},$$

and

$$T_{p2} = \left(1 + \frac{P_1}{P_0}\right) T_{f2} - \frac{P_1}{P_0} T_{f1}.$$

4. Pipe heat loss:

$$Q_1 = K_{p1} (T_{p1} - T_G) ,$$

and

$$Q_2 = K_{p2} (T_{p2} - T_G) .$$

Step 6 Determine the annual operating cost per foot of each section of the system with the various thicknesses of insulation called for in Table B-1, by the following equation:

$$\text{Operating Cost (\$/ft-yr)} = \frac{(Q_1+Q_2) \times H \times C_h}{10^6},$$

where H = total hours of operation per year,
C_h = cost of heat per million Btu,
Q_1 = heat loss from the supply line, and
Q_2 = heat loss from the return line.

The total hours of operation of the system per year can be obtained from the responsible federal agency. The cost of heat per million Btu also can be obtained from the agency if heat is to be provided by an existing heating plant having ample capacity to satisfy the load being added by the system. If construction of a new heating plant or expansion of an existing plant is involved, the cost of heat should be determined in consultation with the agency and the designers of the heating plant. If thought to be significant, anticipated increases in fuel cost should be taken into consideration in calculating the cost of heat.

Step 7 Tabulate separately for each section of the system, using the format suggested below, the information generated in the preceding steps.

REPRODUCIBILITY OF THE ORIGINAL PAGE IS POOR

Insulation Thickness (in.)		Heat loss, from Step 5, (Btu/hr-ft)		Operating Cost, from Step 6, ($/ft-yr)	Owning Cost, from Step 4, ($/ft-yr)	Total Owning and Operating Cost, ($/ft-yr)
Supply (Steam) Line	Return (Condensate) Line	Supply (Steam) Line	Return (Condensate) Line			

Step 8 Analyze the results. If the total owning and operating cost with one particular combination of insulation thicknesses (or one thickness in the case of a single pipe) is clearly lower than the cost with any other combination, it may be assumed that that particular combination is optimum, and the supply and return heat losses associated with that combination should be specified. If the results are not clear cut, the optimum heat loss should be determined through interpolation or by making additional calculations assuming different thicknesses of insulation. If the lowest total owning and operating cost is obtained with the least amount of insulation, no additional calculations are warranted since use of less insulation than the amounts assumed in Table B-1 generally is not practical.

AVERAGE EARTH TEMPERATURE FOR
UNDERGROUND HEAT DISTRIBUTION SYSTEM DESIGN

The following list presents the average earth temperature from 0 to 10 feet below the surface for the four seasons of the year and for the whole year for the indicated locals. The temperatures were computed on the basis of the method described in the 1965 ASHRAE technical paper entitled "Earth Temperature and Thermal Diffusivity at Selected Stations in the United States" by T. Kusuda and P. R. Achenbach (in ASHRAE Transactions, Volume 71, Part I, p. 61, 1965) using the monthly average air temperatures published by the U.S. Weather Bureau for the listed localities in the United States. Earth temperatures are expressed in fahrenheit degrees.

Location	Winter	Spring	Summer	Autumn	Annual
Alabama					
Anniston AP[a]	55.	58.	70.	67.	63.
Birmingham AP	54.	58.	71.	68.	63.
Mobile AP	61.	63.	74.	71.	67.
Mobile CO[b]	61.	64.	75.	72.	68.
Montgomery AP	58.	61.	73.	70.	65.
Montgomery CO	59.	62.	74.	71.	66.
Arizona					
Bisbee COOP[c]	55.	58.	70.	67.	62.
Flagstaff AP	35.	39.	54.	50.	45.
Ft Huachuca (proving ground)	55.	58.	71.	68.	63.
Phoenix AP	60.	64.	79.	75.	69.
Phoenix CO	61.	65.	80.	76.	70.
Prescott AP	46.	49.	65.	61.	55.
Tucson AP	59.	62.	76.	73.	68.
Winslow AP	45.	49.	65.	61.	55.
Yuma AP	65.	69.	84.	80.	75.
Arkansas					
Fort Smith AP	52.	56.	72.	68.	62.
Little Rock AP	53.	57.	72.	68.	62.
Texarkana AP	56.	60.	74.	71.	65.
California					
Bakersfield AP	56.	60.	74.	70.	65.
Beaumont CO	53.	56.	67.	64.	60.
Bishop AP	47.	51.	65.	61.	56.
Blue Canyon AP	43.	46.	58.	55.	50.
Burbank AP	58.	60.	68.	66.	63.
Eureka CO	50.	51.	54.	54.	52.
Fresno AP	54.	58.	72.	68.	63.
Los Angeles AP	58.	59.	64.	63.	61.
Los Angeles CO	60.	61.	68.	66.	64.

Location	Winter	Spring	Summer	Autumn	Annual
California					
Mount Shasta CO	41.	44.	57.	54.	49.
Oakland AP	53.	54.	60.	59.	56.
Red Bluff AP	54.	58.	72.	69.	63.
Sacramento AP	53.	56.	67.	64.	60.
Sacramento CO	54.	57.	68.	65.	61.
Sandberg CO	47.	50.	63.	60.	55.
San Diego AP	59.	60.	66.	65.	62.
San Francisco AP	53.	54.	59.	57.	56.
San Francisco CO	55.	55.	59.	58.	57.
San Jose COOP	55.	57.	64.	62.	59.
Santa Catalina AP	57.	58.	64.	62.	60.
Santa Maria AP	54.	55.	60.	59.	57.
Colorado					
Alamosa AP	30.	35.	52.	48.	41.
Colorado Springs AP	39.	43.	59.	55.	49.
Denver AP	39.	43.	60.	56.	50.
Denver CO	41.	45.	61.	58.	51.
Grand Junction AP	39.	44.	65.	60.	52.
Pueblo AP	41.	45.	62.	58.	51.
Connecticut					
Bridgeport AP	40.	44.	61.	57.	50.
Hartford AP	39.	43.	61.	57.	50.
Hartford AP (Brainer)	39.	43.	60.	56.	50.
New Haven AP	40.	44.	60.	56.	50.
Delaware					
Wilmington AP	44.	48.	64.	60.	54.
Washington, D.C.					
Washington AP	47.	51.	66.	63.	56.
Washington CO	47.	51.	66.	63.	57.
Silver Hill OBS[d]	46.	50.	65.	61.	55.
Florida					
Apalachicola CO	63.	65.	75.	73.	69.
Daytona Beach AP	65.	67.	75.	74.	70.
Fort Myers AP	70.	71.	78.	76.	74.
Jacksonville AP	63.	66.	75.	73.	69.
Jacksonville CO	64.	66.	76.	73.	70.
Key West AP	74.	75.	80.	79.	77.
Key West CO	75.	76.	81.	79.	78.
Lakeland CO	68.	69.	77.	75.	72.
Melbourne AP	68.	70.	77.	75.	72.
Miami AP	72.	74.	79.	78.	76.
Miami CO	72.	73.	78.	77.	75.
Miami Beach COOP	74.	75.	80.	78.	77.
Orlando AP	68.	70.	77.	75.	72.

Location	Winter	Spring	Summer	Autumn	Annual
Florida					
Pensacola CO	62.	64.	74.	72.	68.
Tallahassee AP	61.	64.	74.	72.	68.
Tampa AP	68.	69.	77.	75.	72.
West Palm Beach	71.	73.	79.	77.	75.
Georgia					
Albany AP	60.	63.	75.	72.	67.
Athens AP	54.	58.	71.	68.	63.
Atlanta AP	54.	57.	70.	67.	62.
Atlanta CO	54.	57.	70.	67.	62.
Augusta AP	56.	59.	72.	69.	64.
Columbus AP	56.	59.	72.	69.	64.
Macon AP	58.	61.	74.	71.	66.
Rome AP	53.	56.	70.	67.	61.
Savannah AP	60.	63.	74.	71.	67.
Thomasville CO	62.	64.	74.	72.	68.
Valdosta AP	61.	64.	74.	72.	68.
Idaho					
Boise AP	40.	44.	62.	58.	51.
Idaho Falls 46 W	30.	35.	55.	50.	42.
Idaho Falls 42 N W	28.	33.	54.	49.	41.
Lewiston AP	42.	46.	63.	59.	52.
Pocatello AP	35.	40.	59.	55.	47.
Salmon CO	32.	37.	56.	52.	44.
Illinois					
Cairo CO	49.	53.	70.	66.	60.
Chicago AP	38.	43.	62.	57.	50.
Joliet AP	37.	42.	61.	56.	49.
Moline AP	38.	43.	62.	58.	50.
Peoria AP	39.	44.	63.	58.	51.
Springfield AP	41.	45.	64.	60.	52.
Springfield CO	43.	47.	66.	62.	54.
Indiana					
Evansville AP	47.	51.	67.	63.	57.
Fort Wayne AP	39.	43.	61.	57.	50.
Indianapolis AP	41.	46.	64.	59.	52.
Indianapolis CO	43.	48.	65.	61.	54.
South Bend AP	38.	42.	61.	56.	49.
Terre Haute AP	42.	47.	65.	60.	53.
Iowa					
Burlington AP	39.	44.	64.	59.	51.
Charles City CO	33.	38.	60.	55.	46.
Davenport CO	39.	44.	64.	59.	51.
Des Moines AP	37.	42.	63.	58.	50.
Des Moines CO	38.	43.	64.	59.	51.

Location	Winter	Spring	Summer	Autumn	Annual
Iowa					
Dubuque AP	34.	39.	60.	55.	47.
Sioux City AP	35.	40.	62.	57.	49.
Waterloo AP	35.	40.	61.	56.	48.
Kansas					
Concordia CO	42.	47.	67.	62.	54.
Dodge City AP	43.	48.	67.	62.	55.
Goodland AP	38.	43.	62.	57.	50.
Topeka AP	43.	47.	66.	62.	55.
Topeka CO	44.	49.	68.	63.	56.
Wichita AP	45.	50.	68.	64.	57.
Kentucky					
Bowling Green AP	47.	51.	67.	63.	57.
Lexington AP	44.	48.	65.	61.	54.
Louisville AP	46.	50.	67.	63.	56.
Louisville CO	47.	51.	67.	64.	57.
Louisiana					
Baton Rouge AP	61.	63.	74.	72.	67.
Burrwood CO	65.	67.	77.	74.	71.
Lake Charles AP	61.	64.	75.	73.	68.
New Orleans AP	63.	65.	75.	73.	69.
New Orleans CO	64.	66.	77.	74.	70.
Shreveport AP	58.	61.	75.	72.	66.
Maine					
Caribou AP	24.	29.	50.	45.	37.
Eastport CO	33.	37.	51.	48.	42.
Portland AP	33.	38.	56.	51.	44.
Maryland					
Baltimore AP	45.	49.	65.	61.	55.
Baltimore CO	47.	51.	67.	63.	57.
Frederick AP	44.	48.	65.	61.	55.
Massachusetts					
Boston AP	41.	44.	61.	57.	51.
Nantucket AP	41.	44.	57.	54.	49.
Pittsfield AP	34.	38.	55.	51.	44.
Worcester AP	36.	40.	58.	54.	47.
Michigan					
Alpena CO	33.	37.	54.	50.	43.
Detroit Willow Run AP	38.	42.	60.	56.	49.
Detroit City AP	38.	43.	60.	56.	49.
Escanaba CO	30.	35.	53.	49.	42.
Flint AP	36.	40.	58.	54.	47.
Grand Rapids AP	36.	40.	58.	54.	47.

Location	Winter	Spring	Summer	Autumn	Annual
Michigan					
Grand Rapids CO	38.	42.	60.	56.	49.
East Lansing CO	36.	40.	58.	54.	47.
Marquette CO	31.	35.	53.	49.	42.
Muskecon AP	36.	40.	57.	53.	47.
Sault Ste Marie AP	28.	32.	51.	47.	39.
Minnesota					
Crookston COOP	25.	31.	55.	49.	40.
Duluth AP	25.	30.	52.	47.	38.
Duluth CO	26.	31.	52.	47.	39.
International Falls	22.	27.	51.	45.	36.
Minneapolis AP	32.	37.	60.	54.	46.
Rochester AP	31.	36.	58.	53.	44.
Saint Cloud AP	28.	33.	56.	51.	42.
Saint Paul AP	32.	37.	60.	54.	46.
Mississippi					
Jackson AP	57.	61.	73.	70.	65.
Meridian AP	57.	60.	72.	69.	64.
Vicksburg CO	58.	61.	74.	71.	66.
Missouri					
Columbia AP	43.	48.	66.	62.	55.
Kansas City AP	44.	49.	68.	64.	56.
Saint Joseph AP	42.	47.	67.	62.	54.
Saint Louis AP	45.	49.	67.	63.	56.
Saint Louis CO	46.	50.	68.	64.	57.
Springfield AP	45.	49.	66.	62.	56.
Montana					
Billings AP	35.	40.	59.	55.	47.
Butte AP	27.	31.	50.	45.	38.
Glasgow AP	27.	33.	56.	51.	42.
Glasgow CO	28.	34.	57.	52.	43.
Great Falls AP	34.	38.	56.	52.	45.
Harve CO	31.	36.	57.	52.	44.
Helena AP	31.	36.	55.	50.	43.
Helena CO	32.	36.	55.	50.	43.
Kalispell AP	32.	37.	54.	50.	43.
Miles City AP	32.	37.	59.	54.	45.
Missoula AP	33.	37.	56.	51.	44.
Nebraska					
Grand Island AP	38.	43.	64.	59.	51.
Lincoln AP	39.	44.	64.	60.	52.
Lincoln CO University	40.	45.	65.	61.	53.
Norfolk AP	35.	40.	62.	57.	48.
North Platte AP	37.	42.	62.	57.	49.
Omaha AP	39.	44.	65.	60.	52.

Location	Winter	Spring	Summer	Autumn	Annual
Nebraska					
Scottbluff AP	36.	41.	60.	56.	48.
Valentine CO	35.	40.	61.	56.	48.
Nevada					
Elko AP	34.	39.	57.	53.	46.
Ely AP	35.	39.	56.	52.	45.
Las Vegas AP	56.	60.	78.	74.	67.
Reno AP	40.	44.	58.	55.	49.
Tonopah	41.	45.	61.	57.	51.
Winnemucca AP	38.	42.	60.	56.	49.
New Hampshire					
Concord AP	33.	38.	56.	52.	45.
Mt Washington COOP	17.	21.	37.	33.	27.
New Jersey					
Atlantic City CO	45.	49.	63.	60.	54.
Newark AP	43.	47.	63.	59.	53.
Trenton CO	43.	47.	64.	60.	53.
New Mexico					
Albuquerque AP	46.	50.	67.	63.	57.
Clayton AP	43.	47.	63.	59.	53.
Raton AP	38.	42.	58.	54.	48.
Roswell AP	51.	54.	69.	66.	60.
New York					
Albany AP	36.	40.	59.	54.	47.
Albany CO	38.	43.	61.	56.	49.
Bear Mountain CO	38.	42.	59.	55.	48.
Binghampton AP	34.	38.	56.	52.	45.
Binghampton CO	38.	42.	59.	55.	48.
Buffalo AP	37.	41.	58.	54.	47.
New York AP (La Guardia)	44.	48.	64.	60.	54.
New York CO	44.	47.	63.	59.	53.
New York Central Park	44.	48.	64.	60.	54.
Oswego CO	36.	40.	58.	54.	47.
Rochester AP	37.	41.	58.	54.	47.
Schenectady COOP	35.	40.	59.	55.	47.
Syracuse AP	38.	42.	60.	56.	49.
North Carolina					
Asheville CO	48.	51.	64.	61.	56.
Charlotte AP	52.	55.	69.	66.	60.
Greensboro AP	49.	53.	67.	64.	58.
Hatteras CO	56.	59.	70.	68.	63.
Raleigh AP	51.	55.	69.	65.	60.
Raleigh CO	52.	56.	70.	66.	61.
Wilmington AP	56.	59.	71.	69.	64.
Winston Salem AP	50.	53.	67.	64.	58.

Location	Winter	Spring	Summer	Autumn	Annual
North Dakota					
Bismarck AP	27.	33.	56.	51.	42.
Devils Lake CO	24.	29.	54.	48.	39.
Fargo AP	26.	32.	56.	50.	41.
Minot AP	25.	31.	54.	49.	39.
Williston CO	27.	33.	56.	50.	41.
Ohio					
Akron-Canton AP	39.	43.	60.	56.	50.
Cincinnati AP	43.	47.	64.	60.	54.
Cincinnati CO	46.	50.	66.	63.	56.
Cincinnati ABBE OBS	45.	49.	65.	61.	55.
Cleveland AP	40.	44.	61.	57.	51.
Cleveland CO	41.	45.	62.	58.	51.
Columbus AP	41.	46.	62.	59.	52.
Columbus CO	43.	47.	64.	60.	53.
Dayton AP	42.	46.	63.	59.	52.
Sandusky CO	41.	45.	62.	58.	51.
Toledo AP	38.	43.	60.	56.	49.
Youngstown AP	39.	43.	60.	56.	50.
Oklahoma					
Oklahoma City AP	50.	54.	71.	67.	60.
Oklahoma City CO	50.	55.	71.	68.	61.
Tulsa AP	50.	54.	71.	67.	61.
Oregon					
Astoria AP	47.	48.	56.	54.	51.
Baker CO	36.	40.	56.	52.	46.
Burns CO	36.	40.	58.	54.	47.
Eugene AP	46.	48.	59.	57.	52.
Meacham AP	34.	38.	52.	49.	43.
Medford AP	46.	49.	62.	59.	54.
Pendelton AP	42.	46.	63.	59.	53.
Portland AP	46.	49.	60.	57.	53.
Portland CO	48.	50.	61.	59.	55.
Roseburg AP	47.	49.	60.	57.	53.
Roseburg CO	48.	51.	61.	59.	55.
Salem AP	46.	49.	60.	57.	53.
Sexton Summit	42.	44.	55.	52.	48.
Troutdale AP	45.	48.	59.	57.	52.
Pennsylvania					
Allentown AP	40.	44.	62.	58.	51.
Erie AP	38.	42.	58.	55.	48.
Erie CO	40.	44.	60.	56.	50.
Harrisburg AP	43.	47.	63.	59.	53.
Park Place CO	36.	40.	57.	53.	46.
Philadelphia AP	44.	48.	64.	61.	54.
Philadelphia CO	46.	50.	66.	62.	56.
Pittsburgh Allegheny	42.	46.	62.	58.	52.

Location	Winter	Spring	Summer	Autumn	Annual
Pennsylvania					
Pittsburgh GRTR PITT	40.	44.	61.	57.	51.
Pittsburgh CO	44.	48.	64.	60.	54.
Reading CO	43.	47.	64.	60.	54.
Scranton CO	40.	44.	61.	57.	50.
Wilkes Barre-Scranton	39.	43.	60.	56.	49.
Williamsport AP	40.	44.	61.	57.	51.
Rhode Island					
Block Island AP	41.	45.	59.	55.	50.
Providence AP	39.	43.	59.	56.	49.
Providence CO	41.	45.	62.	58.	51.
South Carolina					
Charleston AP	58.	61.	72.	70.	65.
Charleston CO	60.	62.	74.	71.	67.
Columbia AP	56.	59.	72.	69.	64.
Columbia CO	57.	60.	72.	69.	64.
Florence AP	55.	59.	72.	69.	64.
Greenville AP	53.	56.	69.	66.	61.
Spartanburg AP	53.	56.	70.	66.	61.
South Dakota					
Huron AP	31.	37.	60.	55.	46.
Rapid City AP	34.	39.	58.	54.	46.
Sioux Falls AP	32.	37.	60.	55.	46.
Tennessee					
Bristol AP	48.	51.	65.	62.	56.
Chattanooga AP	51.	55.	69.	65.	60.
Knoxville AP	50.	54.	68.	65.	59.
Memphis AP	52.	56.	71.	68.	62.
Memphis CO	53.	57.	72.	68.	62.
Nashville AP	51.	54.	69.	66.	60.
Oak Ridge CO	49.	52.	67.	64.	58.
Oak Ridge 8 S	49.	52.	67.	64.	58.
Texas					
Abilene AP	55.	58.	73.	70.	64.
Amarillo AP	47.	50.	67.	63.	57.
Austin AP	60.	63.	76.	73.	68.
Big Springs AP	56.	59.	74.	70.	65.
Brownsville AP	68.	70.	79.	77.	74.
Corpus Christi AP	65.	68.	78.	76.	72.
Dallas AP	57.	61.	76.	72.	66.
Del Rio AP	62.	65.	77.	75.	70.
El Paso AP	54.	58.	72.	69.	63.
Fort Worth AP (Amon Carter)	57.	60.	75.	72.	66.
Galveston AP	63.	66.	77.	74.	70.

Location	Winter	Spring	Summer	Autumn	Annual
Texas					
Galveston CO	63.	66.	77.	74.	70.
Houston AP	62.	65.	76.	73.	69.
Houston CO	63.	66.	77.	74.	70.
Laredo AP	67.	70.	81.	79.	74.
Lubbock AP	50.	54.	69.	65.	59.
Midland AP	55.	59.	73.	70.	64.
Palestine CO	58.	62.	74.	71.	66.
Port Arthur AP	61.	64.	75.	72.	68.
Port Arthur CO	63.	65.	76.	74.	69.
San Angelo AP	58.	61.	74.	71.	66.
San Antonio AP	61.	64.	77.	74.	69.
Victoria AP	64.	67.	78.	76.	71.
Waco AP	58.	62.	76.	73.	67.
Wichita Falls AP	53.	57.	73.	69.	63.
Utah					
Blanding CO	39.	43.	60.	56.	50.
Milford AP	37.	42.	61.	56.	49.
Salt Lake City AP	40.	44.	63.	59.	51.
Salt Lake City CO	41.	46.	65.	60.	53.
Vermont					
Burlington AP	32.	37.	57.	52.	44.
Virginia					
Cape Henry CO	51.	55.	68.	65.	60.
Lynchburg AP	48.	51.	66.	62.	57.
Norfolk AP	51.	54.	68.	64.	59.
Norfolk CO	52.	56.	69.	66.	61.
Richmond AP	48.	52.	67.	63.	58.
Richmond CO	50.	53.	68.	64.	59.
Roanoke AP	48.	51.	66.	62.	57.
Washington					
Ellensburg AP	37.	41.	59.	55.	48.
Kelso AP	45.	47.	57.	54.	51.
North Head L H RESVN	47.	49.	54.	53.	51.
Olympia AP	44.	46.	56.	54.	50.
Omak 2 mi N W	36.	40.	59.	55.	47.
Port Angeles AP	45.	46.	53.	52.	49.
Seattle AP (Boeing Field)	46.	48.	58.	56.	52.
Seattle CO	47.	50.	59.	57.	53.
Seattle-Tacoma AP	44.	47.	57.	55.	51.
Spokane AP	37.	41.	58.	54.	47.
Stampede Pass	32.	35.	48.	45.	40.
Tacoma CO	46.	48.	58.	55.	52.
Tattosh Island CO	46.	47.	52.	51.	49.
Walla Walla CO	44.	48.	65.	61.	54.
Yakima AP	40.	44.	61.	57.	50.

Location	Winter	Spring	Summer	Autumn	Annual
West Virginia					
Charleston AP	47.	50.	65.	61.	56.
Elkins AP	41.	45.	59.	56.	50.
Huntington CO	48.	52.	67.	63.	57.
Parkersburg CO	45.	49.	65.	61.	55.
Petersburg CO	44.	48.	63.	60.	54.
Wisconsin					
Green Bay AP	34.	36.	56.	51.	44.
La Crosse AP	32.	38.	60.	55.	46.
Madison AP	34.	39.	59.	54.	47.
Madison CO	34.	39.	60.	55.	47.
Milwaukee AP	35.	40.	58.	54.	47.
Milwaukee CO	36.	41.	59.	55.	48.
Wyoming					
Casper AP	34.	38.	57.	52.	45.
Cheyenne AP	35.	39.	55.	51.	45.
Lander AP	31.	35.	56.	51.	43.
Rock Springs AP	31.	35.	54.	50.	42.
Sheridan AP	33.	37.	56.	52.	44.
Hawaii					
Hilo AP	72.	72.	74.	74.	73.
Honolulu AP	74.	75.	77.	77.	76.
Honolulu CO	74.	74.	77.	76.	75.
Lihue AP	72.	73.	76.	75.	74.
Alaska					
Anchorage AP	25.	29.	46.	42.	35.
Annette AP	40.	42.	51.	49.	46.
Barrow AP	4.	7.	16.	14.	10.
Bethel AP	18.	23.	41.	37.	30.
Cold Bay AP	33.	35.	43.	41.	38.
Cordova AP	32.	35.	45.	43.	39.
Fairbanks AP	14.	19.	38.	34.	26.
Galena AP	13.	18.	37.	33.	25.
Gambell AP	15.	19.	34.	30.	24.
Juneau AP	34.	36.	47.	45.	41.
Juneau CO	36.	39.	49.	46.	42.
King Salmon AP	25.	28.	44.	40.	34.
Kotzebue AP	10.	14.	31.	27.	21.
McGrath AP	14.	18.	37.	33.	25.
Nome AP	16.	20.	37.	33.	26.
Northway AP	12.	16.	32.	29.	22.
Saint Paul Island AP	31.	32.	40.	38.	35.
Yakutat AP	33.	36.	45.	43.	39.
West Indies					
Ponce Santa Isabel AP	75.	76.	78.	78.	77.
San Juan AP	77.	77.	79.	79.	78.

Location	Winter	Spring	Summer	Autumn	Annual
West Indies					
San Juan CO	77.	77.	79.	79.	78.
Swan Island	80.	80.	82.	81.	81.
Virgin Islands					
St Croix, V.I. AP	78.	78.	81.	80.	79.
Pacific Islands					
Canton Island AP	83.	84.	84.	84.	84.
Koror	81.	81.	81.	81.	81.
Ponape Island AP	81.	81.	81.	81.	81.
Truk Moen Island	81.	81.	81.	81.	81.
Wake Island AP	79.	79.	81.	81.	80.
Yap	81.	81.	82.	82.	82.

[a] AP = Airport data.

[b] CO = City office data.

[c] COOP = Cooperative weather station.

[d] OBS = Observation station.

EARTH THERMAL CONDUCTIVITY FACTORS

Tabulated below are earth thermal conductivity factors (K_s) in Btu/hr, in. to be used in the equations presented in this appendix.

Moisture Content of Soil	Type of Soil		
	Sand	Silt	Clay
Low (less than 4% by weight)	2	1	1
Medium (from 4% to 20% by weight)	13	9	7
High (greater than 20% by weight)	15	15	15

The values listed are rough averages of values calculated by various researchers. They are, however, considered sufficiently accurate for the purposes of this appendix. Dry soil is exceedingly rare in most parts of the United States, and a low moisture content should be assumed only if the assumption can be proven valid.

APPENDIX C
GUIDELINES FOR DETERMINING AND REPORTING CONDUCTANCE FACTORS FOR UNDERGROUND HEAT DISTRIBUTION SYSTEMS

The procedures expected to be used by both project designers and suppliers in determining thermal insulation requirements for underground heat distribution systems, require use of conductance factors (see appendix B). In order to ensure that there is no uncertainty as to the proper conductance factors to use for a particular system, suppliers are expected to include complete data on conductance factors for their system(s) in the brochures they submit to agencies. This appendix is intended to serve as a guide to suppliers in preparing such data.

The manner in which the data should be determined and/or presented depends on the type of system involved and its configuration.

1. Systems Involving a Single Pipe in a Circular Insulating Envelope or a Circular Conduit with Circular Cross-Section Insulation (Figure C-1)

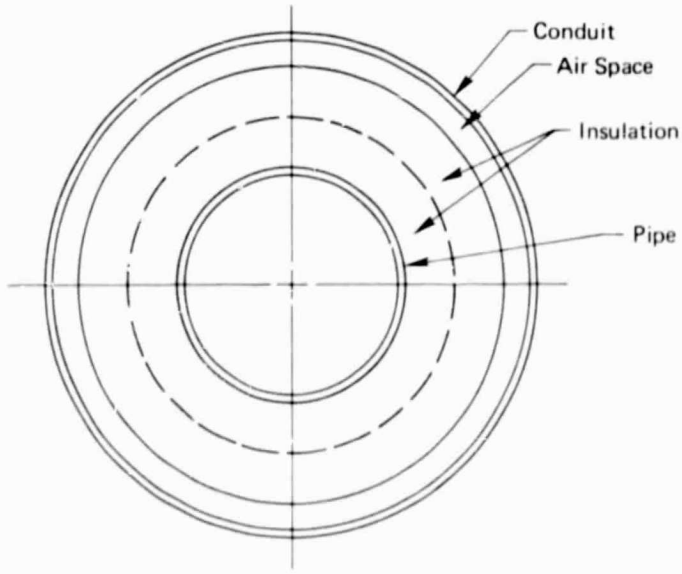

FIGURE C-1 Circular cross-section system with one pipe.

The overall conductance, C, in Btu/hr, °F, (ft of pipe) should be reported for systems involving a single pipe in a circular insulating envelope or a circular conduit with circular cross-section insulation; i.e., the conductance factor reported should include all elements of the system that affect heat transfer (e.g., the pipe wall, the insulation or insulations used, circumferential air spaces, and the conduit wall).

The conductance, C, for such systems should be determined from the following equation:

$$\frac{1}{C} = \frac{1}{C_p} + \frac{1}{C_{I_1}} + \frac{1}{C_{I_2}} + \frac{1}{C_A} + \frac{1}{C_c}$$

where

C = the overall conductance Btu/hr, °F, (ft of pipe),

C_I = the conductance for the pipe,

C_A = the conductance for the air space, if applicable, and

C_c = the conductance for the conduit, if applicable.

Any item in the equation that is not applicable to the system should be ignored.

The results should be presented in tabular form, showing the conductance for the system with all possible combinations of pipe types and diameters and insulation types and thicknesses, as for example illustrated below.

Overall Conductance with: Steel Pipe, Calcium Silica Insulation (k = ___)

Insulation Thickness	Pipe Diameter								

Overall Conductance with: FRP Pipe, Urethane Insulation (k = ___)

Insulation Thickness	Pipe Diameter								

2. Systems Involving Multiple Pipes with Circular Cross-Section Insulation in a Single Circular Conduit (Figure C-2)

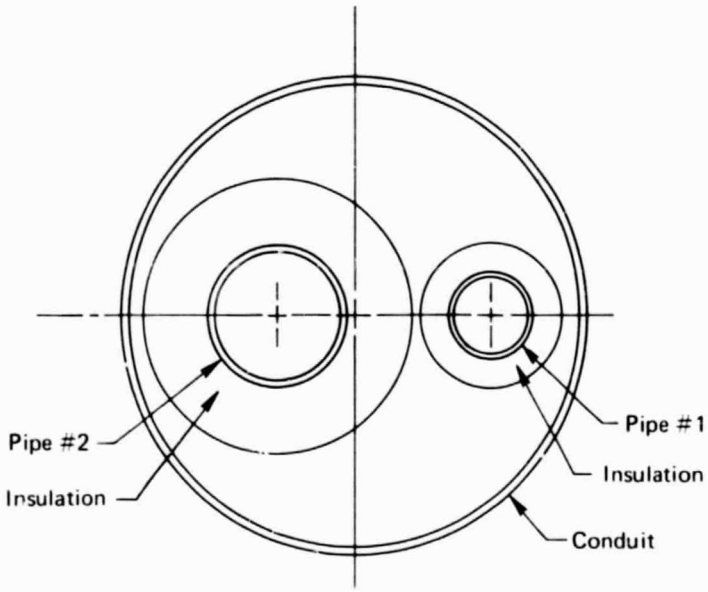

FIGURE C-2 Circular cross-section system with multiple pipes.

For systems involving multiple pipes with circular cross-section insulation in a single circular conduit, the conductance for the insulated pipes (C_{PI}) and the thermal conductivity of the conduit wall (K_C) should be reported separately.

$$\frac{1}{C_{PI}} = \frac{1}{C_P} + \frac{11}{C_{I_1}} + \frac{2}{C_{I_2}}$$

where C_{PI} is the overall conductance for the insulated pipe and C_P, C_{I_1}, and C_{I_2} are the conductances for the pipe and the levels of insulation used.

C_{PI} values should be reported in tables such as those shown in paragraph 1 above.

3. Systems Involving Non-Circular Insulation and/or Conduits

Since standard methods for calculating conductance for non-circular configurations have not been developed, system suppliers will have to develop their own data. The conductance for such systems should be reported in tables similar to those shown in paragraph 1 above. The tables should be accompanied by a report explaining the methods used to generate the data and substantiating the validity of the methods employed.