# NATIONAL AERONAUTICS AND SPACE ADMINISTRATION

(NASA-CR-147602) TERMINAL AREA ENERGY MANAGEMENT REGIME INVESTIGATIONS UTILIZING AN 0.030-SCALE MODEL (47-0) OF THE SPACE SHUTTLE VEHICLE ORBITER CONFIGURATION 140A/B/C/E IN THE AMES RESEARCH CENTER 11 X G3/16

N76-30272
HC $18.25
Unclas
49194

## SPACE SHUTTLE

## AEROTHERMODYNAMIC DATA REPORT

SEP 1976
RECEIVED
NASA STI FACILITY
INPUT BRANCH

JOHNSON SPACE CENTER

HOUSTON, TEXAS

DATA MANagement services

SPACE DIVISION CHRYSLER CORPORATION

July 1976

DMS-DR-2254
NASA CR-147,602
VOLUME 12 OF 13

# TERMINAL AREA ENERGY MANAGEMENT REGIME INVESTIGATIONS UTILIZING AN 0.030-SCALE MODEL (47-0) OF THE SPACE SHUTTLE VEHICLE ORBITER CONFIGURATION 140A/B/C/R IN THE AMES RESEARCH CENTER 11 X 11 FOOT TRANSONIC WIND TUNNEL (OA148)

by

P. J. Hawthorne
Rockwell International Space Division

Prepared under NASA Contract Number NAS9-13247

by

Data Management Services
Chrysler Corporation Space Division
New Orleans, La. 70189

for

Engineering Analysis Division

Johnson Space Center
National Aeronautics and Space Administration
Houston, Texas

WIND TUNNEL TEST SPECIFICS:

| | |
|---|---|
| Test Number: | ARC 11-073 |
| NASA Series Number: | OA148 |
| Model Number: | 47-0 |
| Test Dates: | May 5 through May 17, 1975 |
| Occupancy Hours: | 220 |

FACILITY COORDINATOR:

Stuart L. Treon
Mail Stop 227-5
Ames Research Center
Moffett Field, Calif. 94035

Phone: (415) 922-5850

AERODYNAMICS ANALYSIS ENGINEERS:

S. Kraus
J. H. Reichert
Rockwell International
Space Division
12214 Lakewood Blvd.
Mail Code AC07
Downey, Calif. 90241

Phone: (213) 922-4831

PROJECT ENGINEERS:

P. J. Hawthorne
J. Marroquin
M. D. Milam
Rockwell International
Space Division
12214 Lakewood Blvd.
Mail Code AD38
Downey, Calif. 90241

Phone: (213) 922-3785

R. E. Ellington
J. J. Brownson
Ames Research Center
Mail Stop 227-5
Moffett Field, Calif. 94035

Phone: (415) 965-6262

DATA MANAGEMENT SERVICES:

Prepared by: Liaison--D. A. Sarver
Operations--W. B. Meinders

Reviewed by: D. E. Poucher

Approved: J. L. Glynn, Manager
Data Operations

Concurrence: N. D. Kemp, Manager
Data Management Services

Chrysler Corporation Space Division assumes no responsibility for the data presented other than display characteristics.

TERMINAL AREA ENERGY MANAGEMENT

REGIME INVESTIGATIONS UTILIZING AN 0.030-SCALE

MODEL (47-0) OF THE SPACE SHUTTLE VEHICLE

ORBITER CONFIGURATION 140A/B/C/R IN THE

AMES RESEARCH CENTER 11 x 11 FOOT

TRANSONIC WIND TUNNEL (OA148)

by

P. J. Hawthorne, Rockwell International Space Division

ABSTRACT

This report documents data obtained in wind tunnel test OA148.

The objectives of the test series were to:

1) obtain pressure distributions, forces and moments over the vehicle 5 Orbiter in the terminal area energy management (TAEM) and approach phases of flight.

2) obtain elevon and rudder hinge moments in the TAEM and approach phases of flight.

3) obtain body flap and elevon loads for verification of loads balancing with integrated pressure distributions.

4) obtain pressure distributions near the short OMS pods in the high subsonic, transonic and low supersonic Mach number regimes.

Testing was conducted over a Mach number range from 0.6 to 1.4 with Reynolds number variations from $4.57 \times 10^6$ to $2.74 \times 10^6$ per foot. Model angle-of-attack was varied from -4 to 16 degrees and angles of side slip ranged from -8 to 8 degrees.

TABLE OF CONTENTS


| | Page |
|---|---|
| ABSTRACT | iii |
| INDEX OF MODEL FIGURES | 2 |
| INDEX OF DATA FIGURES | 3 |
| NOMENCLATURE | 5 |
| REMARKS | 9 |
| CONFIGURATIONS INVESTIGATED | 10 |
| TEST FACILITY DESCRIPTION | 12 |
| DATA REDUCTION | 13 |
| REFERENCES | 26 |
| TABLES | |
| I. TEST CONDITIONS | 27 |
| II. DATA SET RUN NUMBER COLLATION SUMMARY | 28 |
| III. MODEL DIMENSIONAL DATA | 34 |
| IV. FUSELAGE PRESSURE TAP LOCATIONS | 44 |
| V. LEFT WING PRESSURE TAP LOCATIONS | 46 |
| VI. ORBITER VERTICAL TAIL AND SPEED BRAKE PRESSURE TAP LOCATIONS | 48 |
| VII. BODY FLAP PRESSURE TAP LOCATIONS | 49 |
| FIGURES | |
| MODEL | 50 |
| DATA | 63 |
| APPENDIX | |
| TABULATED SOURCE DATA | 63 |

## INDEX OF MODEL FIGURES


| Figures | Title | Page |
|---|---|---|
| 1. | Axis systems and sign conventions. | |
| | a. Orbiter Axis Systems | 50 |
| | b. Definition of Angular Measurements | 51 |
| | c. Elevon Hinge Moment Sign Convention | 52 |
| 2. | Model sketches. | |
| | a. Configuration - 140A/B/C/R | 53 |
| | b. Base Pressure Taps and Areas | 54 |
| | c. Fuselage, Vertical Tail, and Wing Pressure Tap Locations | 55 |
| 3. | Model installation photographs. | |
| | a. Three-Quarter Front View of Model 47-0 in the ARC 11 x 11 Foot UPWT | 60 |
| | b. Three-Quarter Rear View of Model 47-0 in the ARC 11 x 11 Foot UPWT | 61 |

## INDEX OF DATA FIGURES

| FIGURE NUMBER | TITLE | CONDITIONS VARYING | PLOTTED COEFFICIENTS SCHEDULE | PAGES |
|---|---|---|---|---|
| VOLUME 1 | | | | |
| 4 | VARIATION OF LATERAL DIRECTIONAL AERODYNAMIC CHARACTERISTICS WITH BETA | ALPHA,MACH,BDFLAP, SPDBRK,ELVN-L,ELVN-R, RUDDER | A | 1-252 |
| 5 | VARIATION OF LONGITUDINAL AERODYNAMIC CHARACTERISTICS WITH ALPHA | BETA,MACH,BDFLAP,SPDBRK, ELVN-L,ELVN-R,RUDDER | B | 253-507 |
| 6 | VARIATION OF HINGE MOMENT CHARACTER-ISTICS WITH ALPHA | BETA,MACH,BDFLAP,SPDBRK, ELVN-L,ELVN-R,RUDDER | C | 508-762 |
| VOLUME 2 | | | | |
| 7 | ORBITER FUSELAGE BODY FLAP DEFLECTION 0 DEGREES | ALPHA, MACH PHI, BETA | D | 763-864 |
| 8 | ORBITER FUSELAGE BODY FLAP DEFLECTION 16.3 DEGREES | ALPHA, MACH PHI, BETA | D | 865-966 |
| 9 | LEFT WING BOTTOM SURFACE ELEVON DEFLECTION 0 DEGREES | ALPHA, MACH 2Y/BW, BETA | E | 967-1051 |
| 10 | LEFT WING BOTTOM SURFACE ELEVON DEFLECTION 10 DEGREES | ALPHA, MACH 2Y/BW, BETA | E | 1052-1136 |
| 11 | LEFT WING TOP SURFACE ELEVON DEFLECTION 0 DEGREES | ALPHA, MACH 2Y/BW, BETA | E | 1137-1221 |
| 12 | LEFT WING TOP SURFACE ELEVON DEFLECTION 10 DEGREES | ALPHA, MACH 2Y/BW, BETA | E | 1222-1306 |
| 13 | VERTICAL TAIL SPEEDBRAKE DEFLECTION 0 DEGREES | ALPHA, MACH Z/BV, BETA | F | 1307-1374 |

INDEX OF DATA FIGURES (Concluded)

| FIGURE NUMBER | TITLE | CONDITIONS VARYING | PLOTTED COEFFICIENTS SCHEDULE | PAGES |
|---|---|---|---|---|
| 14 | VERTICAL TAIL SPEEDBRAKE DEFLECTION 35 DEGREES | ALPHA, MACH Z/BV, BETA | F | 1375-1442 |

PLOTTED COEFFICIENTS SCHEDULE:

A) CY, CYN and CBL versus BETA

B) CN, CA and CLM versus ALPHA

C) CHEO, CHEI, CHETOT and CHBF versus ALPHA

D) CP versus X/LB

E) CP versus X/CW

F) CP versus X/CV

## NOMENCLATURE

| Symbol | Plot Symbol | Definition |
|---|---|---|
| $A_b$ | AB | total Orbiter base area, $ft^2$ |
| $A_i$ | Ai | area over which $P_i$ acts, $ft^2$ |
| $A_{sb}$ | ASB | speed brake base area, $ft^2$ |
| b | BREF, BW | Orbiter wing span, in |
| $b_v$ | BV | vertical tail reference span, in |
| $C_{A_u}$ | CAU | Orbiter uncorrected axial force coefficient |
| $C_A$ | CA | Orbiter axial force coefficient with sting cavity adjusted to average base pressure |
| $C_{A_F}$ | CAF | Orbiter forebody axial force coefficient. |
| $C_{A_{sc}}$ | CASC | Orbiter sting cavity axial force coefficient. |
| $C_{D_U}$ | CDU | Orbiter uncorrected drag coefficient |
| $C_{h_{bf}}$ | CHBF | body flap hinge moment coefficient, about hinge line $X_o$ = 1532.0 |
| $C_{h_{ei}}$ | CHEI | inner elevon hinge moment coefficient, about hinge line $X_o$ = 1387.0 |
| $C_{h_{eo}}$ | CHEO | outer elevon hinge moment coefficient, about hinge line $X_o$ = 1387.0 |
| $C_{H_{e_{TOT}}}$ | CHETOT | total right elevon hinge moment coefficient |
| $C_{L_U}$ | CLU | Orbiter uncorrected lift coefficient |
| $C_\ell$ | CBL | Orbiter rolling moment coefficient, body axis system |

NOMENCLATURE (Continued)

| Symbol | Plot Symbol | Definition |
|---|---|---|
| $C_m$ | CLM | Orbiter pitching moment coefficient with sting cavity adjusted to average base pressure, referenced to Orbiter MRC. |
| $C_{m_u}$ | CLMU | Orbiter uncorrected pitching moment coefficient |
| $C_{m_F}$ | CLMF | Orbiter forebody pitching moment coefficient referenced to orbiter MRC. |
| $C_{m_{sc}}$ | CLMSC | Orbiter sting cavity pitching moment coefficient, referenced to Orbiter MRC |
| $C_{N_u}$ | CNU | Orbiter uncorrected normal force coefficient |
| $C_N$ | CN | Orbiter normal force coefficient with sting cavity adjusted to average base pressure |
| $C_{N_F}$ | CNF | Orbiter forebody normal force coefficient |
| $C_{N_{sc}}$ | CNSC | Orbiter sting cavity normal force coefficient |
| $C_n$ | CYN | Orbiter yawing moment coefficient, body axis system |
| $C_{pi}$ | CPi | surface tap pressure coefficient, port i, $(P_i - P_\infty)/q$ |
| $C_Y$ | CY | Orbiter side force coefficient |
| $C_{[X][Y]}$ | C[X][Y] | base area force and moment coefficients. The first subscript (post fix) designates the type of coefficient, the second the pressure tap and it's associated area. The symbolic vectors [X] and [Y] are defined below. |
| [X]= | | |
| A | A | axial force |
| N | N | normal force |
| Y | Y | side force |
| m | LM | pitching moment |
| n | YN | yawing moment |
| $\ell$ | BL | rolling moment |

NOMENCLATURE (Continued)

| Symbol | Plot Symbol | Definition |
|---|---|---|
| [Y]= | | |
| 1,2,3 | 1,2,3 | areas associated with pressure taps |
| 4,5,6 | 4,5,6 | 1 through 6 see figure 2b |
| sc | SC | sting cavity area |
| bf | BF | upper body flap area |
| $l_b$ | LB | Orbiter reference body length, IML nose to $X_o$ = 1528.3, in. |
| $\ell_{REF}$ | LREF | longitudinal reference length, Orbiter mean aerodynamic chord, in |
| | LU/DU | uncorrected lift to drag ratio, CLU/CDU |
| M | MACH | freestream Mach number |
| $\Phi$ | PHI | angular cylindrical coordinate position around Orbiter body - deg. |
| $P_i$ | Pi | pressure at surface tap i, PSF |
| $P_\infty$ | P | freestream static pressure, PSF |
| $P_t$ | PT | freestream total pressure, PSF |
| q | Q | freestream dynamic pressure, PSF |
| | RN/L | unit Reynolds number, million per foot |
| S | SREF | wing reference area, $ft^2$ |
| $T_t$ | TTR | freestream total temperature, °R |
| $X_{cp}$ | XCP/L | center of pressure location referred to $l_b$ |
| $X_o/L_o$ | X/LB | longitudinal location of body surface, fraction of body length |

NOMENCLATURE (Concluded)

| Symbol | Plot Symbol | Definition |
|---|---|---|
| X/C | X/CW | chordwise location on wing surface, fraction of local chord |
| $X/C_v$ | X/CV | chordwise location on vertical tail, fraction of local chord |
| $\eta_v$ | Z/BV | spanwise location on vertical tail, fraction of vertical tail span |
| $\eta$ | 2Y/BW | spanwise location on wing, fraction of semi span |
| $X_{mrp}$ | XMRP | longitudinal location of moment reference point |
| $X_T$ | XT | longitudinal moment transfer distance from Orbiter balance center to Orbiter MRC, in |
| $Y_{mrp}$ | YMRP | lateral location of moment reference point |
| $Z_T$ | ZT | vertical moment transfer distance from Orbiter balance center to Orbiter MRC, in |
| $\alpha$ | ALPHA | angle of attack, degrees |
| $\beta$ | BETA | angle of sideslip, degrees |
| $\delta_{bf}$ | BDFLAP | body flap deflection, degrees |
| $\delta_{eL}$ | ELVN-L, L-ELVN | left elevon deflection, degrees |
| $\delta_{eR}$ | ELVN-R, R-ELVN | right elevon deflection, degrees |
| $\delta_r$ | RUDDER | rudder deflection, degrees |
| $\delta_{sb}$ | SPDBRK | speed brake deflection, degrees |
| $Z_{mrp}$ | ZMRP | vertical location of moment reference point |
| | $$ | mask character used to indicate all possible values for this test 01 through 85 |

## REMARKS

During the course of the test it was necessary to replumb the scanivalves. The resultant time loss necessitated deleting the priority 4 runs which incorporated the use of the metric vertical tail.

Data obtained from pressure taps 184, 296 and 347 are suspect due to slow leaks noticed while leak checking individual model pressure taps.

Body flap hinge moment data for datasets RE8007 [illegible] RE8005 have a -15% drift while datasets RE8006 and RE8007 have a +10% drift due to data recording system errors. System checks during the remainder of the test indicate a system error of less than 4% for body flap hinge moment data.

Rolling moment data has an approximate -.003 bias in the coefficient. The reason for this was not determined, but possible sources are fabrication tolerances and/or differential stiffness of the left and right elevon panels.

Distortion of the instrumented elevon shaft appears to have occurred around run 310 due to model assembly difficulties and the maximum loads encountered at these test conditions. A comparison of measured elevon deflection before and after the test with the nominal setting is presented below:

| Elevon Panel | Nominal | Pre-Test | Post-Test |
|---|---|---|---|
| Inboard right | -10 | -9° 36' | -8° 55' |
| | -4 | -3° 34' | -2° 55' |
| | 0 | +0° 10' | +1° 02' |
| | 4 | +4° 26' | +4° 28' |
| | 10 | +10°32' | +10°39' |
| Outboard right | -10 | -9° 36' * | -8° 15' |
| | -4 | -3° 34' * | -2° 20' |
| | 0 | +0° 10' * | +1° 05' |
| | 4 | +4° 26' * | +3° 59' |
| | 10 | +10°32' * | +10°18' |

* Inboard only was measured but was the same as outboard panel (see Ref 2)

## CONFIGURATION INVESTIGATED

The Rockwell International model 47-0 Space Shuttle Orbiter Vehicle was utilized in this test series. The model was originially constructed to -140A/B lines, but was modified prior to this test with the addition of the -140C OMS pods, six inch bevelled interpanel elevon gaps and uncovered RCS forward thrustor parts. To denote these additions, the additional designations "C" (for -140C OMS pods) and "R" (for RCS thrustors) were added, and the slashes deleted for convenience on Table II(designated "-140 ABCR").

In data sets RE8069 to 085 the RCS thrustor ports in the nose were filled reverting the configuration to -140A/B/C modified with body $B_{26}$.

The following nomenclature denotes the model components:

| Component | Description |
|---|---|
| $B_{26}$ | 140A/B fuselage (VL70-000140A, VL70000140B) |
| $B_{70}$ | 140A/B fuselage (VL70-000140A, VL70-000145, VL70-000140B, VL70-000143A, VL70-000139) with RCS thrustor parts (VL70-08501, VL70-08502, VL70-08296) |
| $C_9$ | 140A/B basic canopy (VL70-000140A, VL70-000143A) |
| $E_{44}$ | 140A/B elevons (VL70-000200, VL70-006089, VL70-006092) with six inch bevelled interpanel gaps, no flipper door |
| $F_9$ | 140A/B body flap (VL70-000140B, VL70-000200) |
| $M_{16}$ | OMS-RCS pods for 140C Orbiter |
| $N_{28}$ | OMS basic nozzles |
| $R_5$ | basic Orbiter rudder (VL70-000146A, VL70-000095) |
| $V_8$ | basic Orbiter vertical tail (VL70-000140A, VL70-000146A) |
| $W_{116}$ | basic 140A/B wing (VL70-000140B, VL70-000200) |

## CONFIGURATIONS INVESTIGATED (Concluded)

Designated configurations are:

-140ABCR $\equiv B_{70}\ C_9\ E_{44}\ F_9\ M_{16}\ N_{28}\ R_5\ V_8\ W_{116}$

-140 ABC $\equiv B_{26}\ C_9\ E_{44}\ F_9\ M_{16}\ N_{28}\ R_5\ V_8\ W_{116}$

## TEST FACILITY DESCRIPTION

The Ames Research Center Unitary Plan 11- by 11-Foot Transonic Wind Tunnel is a closed-circuit, air-medium, variable-density facility capable of attaining Mach numbers from 0.6 to 1.4 at Reynolds numbers from 1.7 x $10^6$/ft to 9.4 x $10^6$/ft. The test section is 22 feet long, and models are installed on internal strain-gauge balances mounted to sting-type support systems.

Shadowgraph and Schlieren photographic equipment is available, and pressure transducer instrumentation is provided.

Tunnel operating temperature is 580°R. Extended high Reynolds number runs are restricted by power availability.

## DATA REDUCTION

Standard NASA/Ames data reduction equations were used to reduce forces, moments, and pressures to coefficient form. Orbiter main balance force and moment coefficients were computed using the following equations:

| Symbol | Orbiter main balance measurement |
|---|---|
| NF | Normal Force |
| AF | Axial Force |
| PM | Pitching Moment |
| YM | Yawing Moment |
| SF | Side Force |
| RM | Rolling Moment |

$$C_{A_u} = AF / (q\ S) \qquad C_{L_u} = C_{N_u} \cos\alpha - C_{A_u} \sin\alpha$$

$$C_{N_u} = NF / (q\ S) \qquad C_{D_u} = C_{N_u} \sin\alpha + C_{A_u} \cos\alpha$$

$$C_Y = SF / (q\ S)$$

$$C_{m_u} = \frac{PM}{qSc} + \frac{C_A \cdot Z_T}{c} - \frac{C_N \cdot X_T}{c}$$

$$C_\ell = \frac{R\ M}{qSb} + \frac{C_Y \cdot Z_T}{b}$$

$$C_n = \frac{YM}{qSb} - \frac{C_Y \cdot X_T}{b}$$

**Moment Transfer Distances**

$X_T$ = 0.572 in.

$Y_T$ = 0

$Z_T$ = 0.450 in.

The Moment Reference Center about which the data was reduced is located at

| | Orbiter (Full Scale) |
|---|---|
| $X_o$ | 1076.68 |
| $Y_o$ | 0 |
| $Z_o$ | 375.00 |

Balance coefficients were grouped into datasets RE80$$.

DATA REDUCTION (Continued)

Hinge moments and hinge moment coefficients were computed using the following equations:

Elevon hinge moments (inboard and outboard).

$$HM_{e_I} = (HM1-HM2)\ (M1/D1) + HM1$$

$$HM_{eo} = (HM3-HM4)\ (M3/D3) + HM3$$

where

HMi = measured moment on strain gage i

D1 = distance between gages 1 and 2, .49335 in.

D3 = distance between gages 3 and 4, .45800 in.

M1 = moment transfer distance for inboard elevon, .93825 in.

M3 = moment transfer distance for outboard elevon, .92250 in.

Elevon hinge moment coefficients

Inboard, $C_{H_{e_I}} = H_{M_{e_I}} / (q\ S_e\ c_e)$

Outboard, $C_{H_{eo}} = H_{M_{e_o}} / (q\ S_e\ c_e)$

Total, $C_{H_{e_{TOT}}} = C_{H_{e_I}} + C_{H_{e_o}}$

$S_e$ = elevon reference area, 0.189 ft.$^2$

$c_e$ = elevon reference MAC, 2.721 in.

Body flap hinge moment coefficient

$$C_{H_{bf}} = HM_{bf} / (q\ S_{bf}\ c_{bf})$$

$HM_{bf}$ = measured body flap hinge moment

$S_{bf}$ = body flap reference area, 0.12834 ft.$^2$

$c_{bf}$ = body flap reference MAC, 2.541 in.

Hinge moment coefficients are part of datasets RE8X$$.

Pressure coefficients for all model orifice pressure measurements were computed using this equation:

$$C_{p_i} = (P_i - P_\infty)/q$$

where $P_i$ = pressure at model orifice i

$P_\infty$ = tunnel static pressure

q = tunnel dynamic pressure

Other data reduction constants include:

S = wing reference area, 2.4210 ft.$^2$

c = wing reference chord, 14.2443 in.

b = wing reference span, 28.1004 in.

After the data had been reduced to coefficient form by NASA/AMES,DMS interpolated it to nominal α's and β's. Then 2 types of base and sting cavity area coefficients were calculated. When they are applied 3 types of balance coefficient data exists. These can be distinguished by the last subscript (symbolic name) or postfix (mnemonic name). The key is given below

U ~ uncorrected coefficients.

~ coefficients with sting cavity pressure corrected to base pressure (without a suffix).

F ~ forebody coefficients with the base area pressure corrected to freestream pressure.

Only the correction coefficients associated with base pressure tapes 1 through 4 were applied to the longitudinal orbiter coefficients.

Figure 2b illustrates the base area associated with each pressure tap. Alphabetic characters bf and sc designate body flap and sting cavity areas, respectively. Base area coefficient names have a numeric character which designates the pressure tap number. Base coefficients for vertical tail areas 5 and 6 were calculated but not applied to the total orbiter coefficients. Base area coefficient values are tabulated in the appendix. A detailed derivation of these coefficients follows. It is concluded by a matrix of base area geometric properties.

The orbiter sting cavity force and moment coefficients were computed as:

$$C_{A_{sc}} = \frac{(C_{p2} - C_{p1})\, A_1}{S}$$

$$C_{N_{sc}} = \frac{(C_{p2} - C_{p1})\, A_1 \tan 12.55°}{S}$$

$$C_{m_{sc}} = C_{A_{sc}} \frac{Z_t}{c} - C_{N_{sc}} \frac{X_{sc}}{c}$$

The orbiter force and moment coefficients corrected for the difference between balance cavity pressure and orbiter base pressure:

$$C_A = C_{A_u} - C_{A_{sc}}$$

$$C_N = C_{N_u} - C_{N_{sc}}$$

$$C_m = C_{m_u} - C_{m_{sc}}$$

These orbiter coefficients are part of datasets KE80$$.

Orbiter base force and moment coefficients were calculated as follows:

Upper base area

$$C_{N2u} = -(C_{p2}\ A_{2u} \tan 16°)/S$$

$$C_{A2u} = -(C_{p2}\ A_{2u})/S$$

$$C_{m2u} = \frac{C_{A2u}\ Z_{2u}}{c} - \frac{C_{N2u}\ X_{2u}}{c}$$

Lower base area

$$C_{N2_\ell} = -(C_{p2}\ A_{2_\ell} \tan 10°)/S$$

$$C_{A2_\ell} = -(C_{p2}\ A_{2_\ell})/S$$

$$C_{m2_\ell} = C_{A2_\ell} \frac{Z_{2\ell}}{c} - C_{N2_\ell} \frac{X_{2\ell}}{c}$$

Total base area, $A_2$

$$C_{N2} = C_{N2_u} + C_{N2_\ell}$$

$$C_{A2} = C_{A2_u} + C_{A2_\ell}$$

$$C_{m2} = C_{m2_u} + C_{m2_\ell}$$

OMS pod base area, $A_3$

(This assumes the surface is perpendicular to the orbiter X-axis)

$$C_{A3} = -(C_{p3}\ A_3)/S$$

$$C_{m3} = C_{A3} \frac{Z_3}{c}$$

OMS pod base area, $A_4$

(This assumes the surface is perpendicular to the orbiter X-axis)

$$C_{A4} = -(C_{p4}\ A_4)/S$$

$$C_{m4} = C_{A4}\ \frac{Z_4}{c}$$

Coefficients for the above areas are grouped into datasets EE8D$$.

Upper surface of body flap

$$C_{A_{bf}} = \frac{-C_{p_{bf}}\ A_{bf}}{S} \sin\ (\delta_{bf} + 6.88°)$$

$$C_{N_{bf}} = \frac{-C_{p_{bf}}\ A_{bf}}{S} \cos\ (\delta_{bf} + 6.88°)$$

$$C_{m_{bf}} = \frac{C_{A_{bf}}\ Z_{bf}}{c} - \frac{C_{N_{bf}}\ X_{bf}}{c}$$

where:

$$C_{p_{bf}} = \frac{C_{p200} + C_{p201} + C_{p204} + C_{p205}}{4}$$

The orbiter force and moment coefficients adjusted to free stream pressure (forebody coefficients).

$$C_{A_F} = C_{A_u} - \left(\frac{-C_{p1}\ A_1}{S} + \sum_{i=2}^{4} C_{A_i} + C_{A_{bf}}\right)$$

$$C_{N_F} = C_{N_u} - \left(C_{N2} + C_{N_{bf}}\right)$$

$$C_{mF} = C_{mu} - \left(\sum_{i=2}^{4} C_{m_i} + C_{m_{bf}}\right)$$

These orbiter coefficients are part of datasets KE80$$.

Vertical tail "undercarriage" area, $A_5$

Top Segment:

$$C_{N5t} = (C_{p5}\ A_{5t} \tan 63.75°)/S$$

$$C_{A5t} = -(C_{p5} A_{5t})/S$$

$$C_{m5t} = C_{A5t} \frac{Z_{5t}}{c} - C_{N5t} \frac{X_{5t}}{c}$$

Middle Segment:

$$C_{N5m} = (C_{p5} A_{5m} \tan 26.1426°)/S$$

$$C_{A5m} = -(C_{p5} A_{5m})/S$$

$$C_{m5m} = C_{A5m} \frac{Z_{5m}}{c} - C_{N5m} \frac{X_{5m}}{c}$$

Bottom Segment:

$$C_{N5b} = (C_{p5} A_{5b} \tan 21.94°)/S$$

$$C_{A5b} = -(C_{p5} A_{5b})/S$$

$$C_{m5b} = C_{A5b} \frac{Z_{5b}}{c} - C_{N5b} \frac{X_{5b}}{c}$$

Total area, $A_5$:

$$C_{N5} = C_{N5t} + C_{N5m} + C_{N5b}$$

$$C_{A5} = C_{A5t} + C_{A5m} + C_{A5b}$$

$$C_{M5} = C_{m5t} + C_{m5m} + C_{m5b}$$

Vertical Tail base area, $A_6$:

Segment above rudder

$$C_{N6u} = (C_{p6} A_{6u} \tan 63.75°)/S$$

$$C_{A6u} = (C_{p6} A_{6u})/S$$

$$C_{m6u} = C_{A6u} \frac{Z_{6u}}{c} - C_{N6u} \frac{X_{6u}}{c}$$

Rudder/Speed brake base:

$$C_{A6_\ell} = C_{p6}\, A_{6'_\ell}\, [\sin(\theta - 55.1667°)\cos 55.1667° + \cos(\theta - 55.1667°)\sin 55.1667°\cos(\delta r)]/S$$

$$C_{N6_\ell} = C_{p6}\, A_{6'_\ell}\, [\sin(\theta - 55.1667°)\sin 55.1667° - \cos(\theta - 55.1667°)\cos 55.1667°\cos(\delta r)]/S$$

$$C_{Y6_\ell} = C_{p6}\, A_{6'_\ell}\cos(\theta - 55.1667°)\sin \delta r/S$$

$$C_{m6_\ell} = [C_{A6_\ell}(Z_{6_\ell}) - C_{N6}(X_{6_\ell})]/c$$

$$C_{\ell 6_\ell} = [C_{Y6_\ell}(Z_{6_\ell})]/b$$

$$C_{n6_\ell} = -[C_{Y6}(X_{6_\ell})]/b$$

$$\theta = \tan^{-1}\left[\frac{5.456791 + .573209\cos\left(\frac{\delta SB}{2}\right)}{3.797715 - .823715\cos\left(\frac{\delta SB}{2}\right)}\right]$$

$$A_{6'_\ell} = A_{6_\ell}/\sin\theta$$

Total area, $A_6$:

$$C_{A6} = C_{A6u} + C_{A6\ell}$$

$$C_{N6} = C_{N6u} + C_{N6\ell}$$

$$C_{Y6} = C_{Y6\ell}$$

$$C_{m6} = C_{m6u} + C_{m6\ell}$$

$$C_{\ell 6} = C_{\ell 6\ell}$$

$$C_{n6} = C_{n6_\ell}$$

Vertical tail area coefficient data are grouped into datasets GE8D$$.

BASE GEOMETRIC PROPERTIES MATRIX

| Description | Sub-script | Area A - ft.$^2$ | Distance between Centroid and MRC vertical Z - in. | Distance between Centroid and MRC longitudinal X - in. |
|---|---|---|---|---|
| Sting cavity | sc | 0.076699 | 0.45 | 12.199 |
| Body flap upper surface | bf | 0.128 | - 2.64 | 13.659 |
| Orbiter balance cavity | 1 | 0.076699 | 0.45 | 12.199 |
| Orbiter base orifice 2 lower | 2ℓ | 0.133889 | - 1.32 | 12.617 |
| Orbiter base orifice 2 upper | 2u | 0.0818055 | 2.07 | 12.384 |
| Lower OMS pod | 3 | 0.030472 | 2.68 | NA |
| Upper OMS pod | 4 | 0.074166 | 3.63 | NA |
| Vertical tail "undercarriage" bottom | 5b | 0.003565 | 4.612 | 12.395 |
| Vertical tail "undercarriage" middle | 5m | 0.002610 | 5.336 | 14.079 |
| Vertical tail "undercarriage" top | 5t | 0.000341 | 5.97 | 15.185 |
| Vertical tail above rudder | 6u | 0.000798 | 12.656 | 18.482 |
| Base area of speed brake | 6ℓ | Varies with speed brake deflection | | |

NOTES: Sting cavity and Orbiter balance cavity are synonymous.

NA - not applicable.

DATA REDUCTION (Continued)

| $\delta_{sb}$ | $A6_\ell$ ft$^2$ |
|---|---|
| 0 | 0.0066036 |
| 25 | 0.0456000 |
| 35 | 0.0621000 |
| 55 | 0.0950800 |
| 85 | 0.1551400 |

$$X_{6\ell} = 15.045 + 1.442277\ [1-\cos\ (\delta sb/2)]$$

$$Z_{6\ell} = 9.755 + 0.501827\ [1-\cos\ (\delta sb/2)]$$

Standard DMS loads cycle test procedures were used to process the OA148 pressure data. First numerous pressure distribution plots were released. Analysis of these produced bad pressure data list. This list is reproduced below:

DATA REDUCTION (Continued)

OA148 Bad Pressure Data

| Component | Dataset No. | Tap No. | β | α |
|---|---|---|---|---|
| Fuselage (B) | 1 | 143 | 4 | -4 |
| | 1 | 148 | 4 | -4 |
| | 1 | 150 | 4 | -4 |
| | 1 | 152 | 4 | -4 |
| | 1 | 186 | 4 | -4 |
| | 1 | 187 | 4 | -4 |
| | 1 | 189 | 4 | -4 |
| | 1 | 191 | 4 | -4 |
| | 1 | 193 | 4 | -4 |
| Lower Wing (L) | 1 → 7 | 231 | ALL | ALL |
| | 1 → 85 | 290 | ALL | ALL |
| | 1 | 316 | 4 | -4 |
| | 1 | 317 | 4 | -4 |
| | 1 | 337 | 4 | -4 |
| | 1 | 338 | 4 | -4 |
| | 1 | 358 | 4 | -4 |
| | 1 | 378 | 4 | -4 |
| | 1 | 379 | 4 | -4 |
| | 1 | 398 | 4 | -4 |
| Upper Wing (U) | 1 → 7 | 247 | ALL | ALL |
| | 1 | 357 | 4 | -4 |
| Body Flap (F) | 24 | 205 | -4 | 12 |
| Speed Brake (K) | 1 → 85 | 822 | ALL | ALL |
| Vertical Tail (V) | 8 | 443 | ALL | ALL |
| | ALL | 1444 | ALL | ALL |
| | 79 | 1453 | -4 | -4 |
| | 79 | 1454 | -4 | -4 |

Note: Wind tunnel pressure data tabulated in the appendix have the original bad data values.

These points were eliminated from further processing. The remaining data were interpolated to nominal alpha and beta values. Processing was completed with the release of a magnetic tape containing the final interpolated pressure coefficients.

This report contains plots and tabular listings for both force and pressure data. Plotted force data illustrates lateral-directional, longitudinal and hinge moment characteristics of the configuration tested. Plotted pressure data illustrates the effect of several control deflections and attitude changes on local pressure distributions. The multiple volume appendix contains a tabulated listing of the basic force and pressure data. Listing of the interpolated base area coefficients is also included. The plotted and tabulated data are arranged in the following manner:

| VOLUME NO. | CONTENTS |
|---|---|
| 1 | Force data plots showing lateral-directional longitudinal and hinge moment characteristics. |
| 2 | Plots illustrating the effect of control surface deflections on fuselage, wing and vertical tail pressure distributions. |

## DATA REDUCTION (Concluded)

| VOLUME NO. | CONTENTS |
|---|---|
| 3 | Tabulated Force Data |

| Dataset | Data type |
|---|---|
| RE80$$ | source balance coefficients |
| RE8X$$ | source hinge moment coefficients |
| RE8Y$$ | source base pressure coefficients |
| KE80$$ | interpolated balance coefficients adjusted for cavity pressure and forebody coefficients |
| EE8D$$<br>FE8D$$ | interpolated base and cavity area coefficients |
| GE8D$$ | interpolated vertical tail base area coefficients |

Tabulated Pressure Data

| | Component | Fourth Character* | Page |
|---|---|---|---|
| 4, 5 | orbiter fuselage | B | 1 |
| 6,7,8 | lower wing | L | 1271 |
| 9,10,11 | upper wing | U | 3147 |
| 12 | upper body flap | F | 5405 |
| 12 | lower body flap | G | 5774 |
| 13 | speed brake | K | 6143 |
| 13 | vertical tail | V | 6547 |

* The fourth character in each dataset identifier (i.e., XE8BXX, B for Fuselage) represents the individual component.

## REFERENCES


1. SD75-SH-0106, "Pretest Information for OA148 of the 0.03-Scale 47-0 Pressure Loads Space Shuttle Model in the 11 x 11 Foot Leg of the NASA/ARC Unitary Plan Wind Tunnel," April 18, 1975.

2. MG-75-07-11, Rockwell International Corporation Internal Letter: "Model design Dimensional Varification Task 36: Elevon Deflection Angle Check of the 0.03-Scale SSV Model 47-0 (140A/B Configuration)". SAS/WTO/75-283, July 29, 1975.

TABLE I

TEST : 0A148

DATE : May 1975

TEST CONDITIONS

| MACH NUMBER | REYNOLDS NUMBER (per foot) | DYNAMIC PRESSURE (pounds/sq. inch) | STAGNATION TEMPERATURE (degrees Fahrenheit) |
|---|---|---|---|
| 0.60 | $4.57 \times 10^6$ | 4.166 | 120 |
| 0.90 | $3.41 \times 10^6$ | 4.166 | 120 |
| 1.10 | $3.05 \times 10^6$ | 4.166 | 120 |
| 1.25 | $2.86 \times 10^6$ | 4.166 | 120 |
| 1.40 | $2.74 \times 10^6$ | 4.166 | 120 |

BALANCE UTILIZED: ARC Task MK ~~XX~~ A

| | CAPACITY: | ACCURACY: | COEFFICIENT TOLERANCE: |
|---|---|---|---|
| NF | 3000 lbf/gage | | |
| SF | 1500 lbf/gage | | |
| AF | 600 lbf | | |
| PM | 27,000 in-lbf | | |
| RM | 4000 in-lbf | | |
| YM | 10,500 in-lbf | | |

COMMENTS: Maximum normal and side force dependent upon point of application

ARC 11-073

TABLE II.

TEST: OA 148

DATA SET RUN NUMBER COLLATION SUMMARY

DATE: POST TEST

| DATA SET IDENTIFIER | CONFIGURATION | α | β | $\delta_R$ | $\delta_{SB}$ | $\delta_{DF}$ | $\delta_{EL}$ | $\delta_{ER}$ | α -4 | 0 | 4 | 8 | 12 | 16 | MACH NUMBERS | | | |
|---|---|---|---|---|---|---|---|---|---|---|---|---|---|---|---|---|---|---|
| RE8001 | -140 ABCR | B | D | 0 | 55 | 16.3 | 0 | 0 | 32 | 33 | 34 | 35 | 58 | 59 | | 1.4 | | |
| 002 | | A | D | | | | | | 38 | 39 | 40 | 41 | 42 | | | 1.25 | | |
| 003 | | A | D | | | | | | 43 | 44 | 45 | 46 | 47 | | | 1.1 | | |
| 004 | | A | D | | | | | | 48 | 49 | 50 | 51 | 52 | | | 0.9 | | |
| 005 | | A | C | | | | | | 53 | 54 | 55 | 56 | 57 | | | 0.6 | | |
| | | | | | | | | | | | | | | | | | | |
| 006 | -140 ABCR | A | C | 0 | 55 | 22.5 | 0 | 0 | 60 | 61 | 62 | 63 | 64 | | | 0.6 | | |
| 007 | | A | D | | | | | | 65 | 68 | 67 | 69 | 70 | | | 0.9 | | |
| | | | | | | | | | | | | | | | | | | |
| 008 | -140 ABCR | B | D | 0 | 85 | 22.5 | 0 | 0 | 71 | 72 | 73 | 74 | 75 | 76 | | 1.4 | | |
| 009 | | A | D | | | | | | 77 | 78 | 79 | 80 | 81 | | | 1.25 | | |
| 010 | | A | D | | | | | | 82 | 83 | 84 | 85 | 86 | | | 1.1 | | |
| 011 | | A | D | | | | | | 87 | 88 | 89 | 90 | 91 | | | 0.9 | | |
| 012 | | A | C | | | | | | 92 | 93 | 94 | 95 | 96 | | | 0.6 | | |

TEST RUN NUMBER

1 7 13 19 25 31 37 43 49 55 61 67 75 76

COEFFICIENTS

IDVAR (1) IDVAR (2) NDV

α OR β SCHEDULES

$A_\alpha$ = -4, 0, 4, 8, 12

$B_\alpha$ = -4, 0, 4, 8, 12, 16

$C_\beta$ = -8, -4, 0, 4, 8

$D_\beta$ = -4, 0, 4

NASA-MSFC-MAF

TABLE II - Continued.

TEST: OA 148 | DATA SET RUN NUMBER COLLATION SUMMARY | DATE: POST TEST

| DATA SET IDENTIFIER | CONFIGURATION | α | β | $\delta_R$ | $\delta_{SB}$ | $\delta_{BF}$ | $\delta_{EL}$ | $\delta_{ER}$ | α -4 | 0 | 4 | 8 | 12 | 16 | MACH NUMBERS | | | |
|---|---|---|---|---|---|---|---|---|---|---|---|---|---|---|---|---|---|---|
| RE8013 | -140 ABCR | B | D | 0 | 35 | 0 | 0 | 0 | 97 | 98 | 99 | 100 | 101 | 102 | | 1.4 | | |
| 014 | | A | D | | | | | | 103 | 104 | 105 | 106 | 107 | | | 1.25 | | |
| 015 | | A | D | | | | | | 108 | 109 | 110 | 111 | 112 | | | 1.1 | | |
| 016 | | A | D | | | | | | 113 | 114 | 115 | 116 | 117 | | | 0.9 | | |
| 017 | | A | C | | | | | | 118 | 119 | 120 | 121 | 122 | | | 0.6 | | |
| | | | | | | | | | | | | | | | | | | |
| 018 | -140 ABCR | B | D | 0 | 0 | -117 | 0 | 0 | 123 | 124 | 125 | 126 | 127 | 128 | | 1.4 | | |
| 019 | | A | D | | | | | | 131 | 129 | 130 | 132 | 133 | | | 1.25 | | |
| 020 | | A | D | | | | | | 134 | 135 | 136 | 137 | 138 | | | 1.1 | | |
| 021 | | A | D | | | | | | 139 | 140 | 141 | 142 | 143 | | | 0.9 | | |
| 022 | | A | C | | | | | | 144 | 145 | 146 | 147 | 148 | | | 0.6 | | |
| | | | | | | | | | | | | | | | | | | |
| 023 | -140 ABCR | B | D | 0 | 0 | 0 | 0 | 0 | 149 | 150 | 151 | 152 | 153 | 154 | | 1.4 | | |
| 024 | | A | D | | | | | | 155 | 156 | 157 | 158 | 159 | | | 1.25 | | |
| 025 | | A | D | | | | | | 160 | 161 | 162 | 163 | 164 | | | 1.1 | | |
| 026 | | A | D | | | | | | 165 | 166 | 167 | 168 | 169 | | | 0.9 | | |
| 027 | | A | C | | | | | | 170 | 171 | 172 | 173 | 174 | | | 0.6 | | |

TEST RUN NUMBER

1 7 13 19 25 31 37 43 49 55 61 67 75 76

COEFFICIENTS | IDVAR (1) | IDVAR (2) | NDV

α OR β SCHEDULES

NASA-MSFC-MAF

TABLE II. - Continued.

TEST: OA 148

DATA SET RUN NUMBER COLLATION SUMMARY

DATE: POST TEST

| DATA SET IDENTIFIER | CONFIGURATION | α | β | $\delta_r$ | $\delta_{SB}$ | $\delta_{BF}$ | $\delta_{EL}$ | $\delta_{EE}$ | α -4 | α 0 | α 4 | α 8 | α 12 | α 16 | MACH NUMBERS | | | | TEST RUN NUMBER |
|---|---|---|---|---|---|---|---|---|---|---|---|---|---|---|---|---|---|---|---|
| RE8028 | 140 ABCR | B | D | -10 | 35 | 163 | 10 | 0 | 175 | 176 | 177 | 178 | 179 | 180 | | 1.4 | | | |
| 029 | | A | D | | | | | | 181 | 182 | 183 | 184 | 185 | | | 1.25 | | | |
| 030 | | A | D | | | | | | 186 | 187 | 188 | 189 | 190 | | | 1.1 | | | |
| 031 | | A | D | | | | | | 191 | 192 | 193 | 194 | 195 | | | 0.9 | | | |
| 032 | | A | C | | | | | | 196 | 197 | 198 | 199 | 200 | | | 0.6 | | | |
| | | | | | | | | | | | | | | | | | | | |
| 033 | 140 ABCR | B | D | +10 | 35 | 163 | 0 | 10 | 201 | 202 | 203 | 204 | 205 | 206 | | 1.4 | | | |
| 034 | | A | D | | | | | | 207 | 208 | 209 | 210 | 211 | | | 1.25 | | | |
| 035 | | A | D | | | | | | 212 | 213 | 214 | 215 | 216 | | | 1.1 | | | |
| 036 | | A | D | | | | | | 217 | 218 | 219 | 220 | 221 | | | 0.9 | | | |
| 037 | | A | C | | | | | | 222 | 223 | 224 | 225 | 226 | | | 0.6 | | | |
| | | | | | | | | | | | | | | | | | | | |
| 038 | 140 ABCR | B | D | +10 | 85 | 163 | 10 | 10 | 227 | 228 | 229 | 230 | 231 | 232 | | 1.4 | | | |
| 039 | | A | D | | | | | | 233 | 234 | 235 | 236 | 237 | | | 1.25 | | | |
| 040 | | A | D | | | | | | 238 | 239 | 240 | 241 | 242 | | | 1.1 | | | |
| 041 | | A | D | | | | | | 243 | 244 | 245 | 246 | 247 | | | 0.9 | | | |
| 042 | | A | C | | | | | | 248 | 249 | 250 | 251 | 252 | | | 0.6 | | | |
| | | | | | | | | | | | | | | | | | | | |

1 7 13 19 25 31 37 43 49 55 61 67 75 76

COEFFICIENTS IDVAR (1) IDVAR (2) NDV

α OR β SCHEDULES

NASA-MSFC-MAF

TABLE II. - Continued.

TEST: OA 148

DATA SET RUN NUMBER COLLATION SUMMARY

DATE: POST TEST

| DATA SET IDENTIFIER | CONFIGURATION | α | β | $\delta_R$ | $\delta_{SB}$ | $\delta_{BF}$ | $\delta_{BL}$ | $\delta_{BR}$ | α -4 | 0 | 4 | 8 | 12 | 16 | | MACH NUMBERS | | | TEST RUN NUMBER |
|---|---|---|---|---|---|---|---|---|---|---|---|---|---|---|---|---|---|---|---|
| RE8 043 | 140 ABCR | A | D | 0 | 55 | 225 | 10 | 10 | 253 | 254 | 255 | 256 | 257 | | | 0.9 | | | |
| 044 | | A | C | | | | | | 258 | 259 | 260 | 261 | 262 | | | 0.6 | | | |
| | | | | | | | | | | | | | | | | | | | |
| 045 | 140 ABCR | A | D | 0 | 55 | 225 | 4 | 4 | 263 | 264 | 265 | 266 | 267 | | | 0.9 | | | |
| 046 | | A | C | | | | | | 268 | 269 | 270 | 271 | 272 | | | 0.6 | | | |
| | | | | | | | | | | | | | | | | | | | |
| 047 | 140 ABCR | B | D | -10 | 85 | 163 | 4 | 4 | 273 | 274 | 275 | 276 | 277 | 278 | | 1.4 | | | |
| 048 | | A | D | | | | | | 279 | 280 | 281 | 282 | 283 | | | 1.25 | | | |
| 049 | | A | D | | | | | | 284 | 285 | 286 | 287 | 288 | | | 1.1 | | | |
| 050 | | A | D | | | | | | 289 | 290 | 291 | 292 | 293 | | | 0.9 | | | |
| 051 | | A | C | | | | | | 294 | 295 | 296 | 297 | 298 | | | 0.6 | | | |
| | | | | | | | | | | | | | | | | | | | |
| 052 | 140 ABCR | B | D | -10 | 55 | 163 | -4 | +4 | 299 | 300 | 301 | 302 | 303 | 304 | | 1.4 | | | |
| 053 | | A | D | | | | | | 305 | 306 | 307 | 308 | 309 | | | 1.25 | | | |
| 054 | | A | D | | | | | | 310 | 311 | 312 | 313 | 314 | | | 1.1 | | | |
| 055 | | A | D | | | | | | 315 | 316 | 317 | 318 | 319 | | | 0.9 | | | |
| 056 | | A | C | | | | | | 320 | 321 | 322 | 323 | 324 | | | 0.6 | | | |
| | | | | | | | | | | | | | | | | | | | |

1 7 13 19 25 31 37 43 49 55 61 67 75 76

COEFFICIENTS IDVAR (1) IDVAR (2) NDV

α OR β

SCHEDULES

NASA-MSFC-MAF

TABLE II. - Continued.

TEST: OA 148

DATA SET/RUN NUMBER COLLATION SUMMARY

DATE: POST TEST

| DATA SET IDENTIFIER | CONFIGURATION | α | β | $\delta_R$ | $\delta_{SB}$ | $\delta_{BF}$ | $\delta_{BL}$ | $\delta_{BR}$ | α -4 | 0 | 4 | 8 | 12 | 16 | | MACH NUMBERS | | | TEST RUN NUMBER |
|---|---|---|---|---|---|---|---|---|---|---|---|---|---|---|---|---|---|---|---|
| RE8057 | -140ABCR | B | D | 10 | 55 | 16.3 | 4 | -4 | 325 | 326 | 327 | 328 | 329 | 330 | | 1.4 | | | |
| 058 | | A | D | | | | | | 331 | 332 | 333 | 334 | 335 | | | 1.25 | | | |
| 059 | | A | D | | | | | | 336 | 337 | 338 | 339 | 340 | | | 1.1 | | | |
| 060 | | A | D | | | | | | 340 | 342 | 343 | 344 | 345 | | | 0.9 | | | |
| 061 | | A | C | | | | | | 346 | 347 | 348 | 349 | 350 | | | 0.6 | | | |
| | | | | | | | | | | | | | | | | | | | |
| 062 | -140ABCR | B | D | +5 | 55 | 16.3 | -4 | -4 | 351 | 352 | 353 | 354 | 355 | 356 | | 1.4 | | | |
| 063 | | A | D | | | | | | 357 | 358 | 359 | 360 | 361 | | | 1.25 | | | |
| 064 | | A | D | | | | | | 362 | 363 | 364 | 365 | 366 | | | 1.1 | | | |
| 065 | | A | D | | | | | | 367 | 368 | 369 | 370 | 371 | | | 0.9 | | | |
| 066 | | A | C | | | | | | 372 | 373 | 374 | 375 | 376 | | | 0.6 | | | |
| | | | | | | | | | | | | | | | | | | | |
| 067 | -140ABCR | A | D | 0 | 55 | 22.5 | -4 | -4 | 377 | 378 | 379 | 380 | 381 | | | 0.9 | | | |
| 068 | | A | C | | | | | | 382 | 383 | 384 | 385 | 386 | | | 0.6 | | | |
| | | | | | | | | | | | | | | | | | | | |
| 069 | -140 ABC | A | D | 0 | 55 | 22.5 | -10 | -10 | 387 | 388 | 389 | 390 | 391 | | | 0.9 | | | |
| 070 | | A | C | | | | | | 392 | 393 | 394 | 395 | 396 | | | 0.6 | | | |
| | | | | | | | | | | | | | | | | | | | |

1 7 13 19 25 31 37 43 49 55 61 67 75 76

COEFFICIENTS

α OR β SCHEDULES

IDVAR (1) IDVAR (2) NDV

NASA-MSFC-MAF

ORIGINAL PAGE IS OF POOR QUALITY

TABLE II. - Concluded.

TEST: OA148 | DATA SET RUN NUMBER COLLATION SUMMARY | DATE: POST TEST

| DATA SET IDENTIFIER | CONFIGURATION | α | β | $\delta_R$ | $\delta_{SB}$ | $\delta_{DF}$ | $\delta_{EL}$ | $\delta_{EB}$ | X -4 | 0 | +4 | 8 | 12 | 16 | | MACH NUMBERS | | | TEST RUN NUMBER |
|---|---|---|---|---|---|---|---|---|---|---|---|---|---|---|---|---|---|---|---|
| RE8071 | -140 ABC | B | D | -5 | 55 | 16.3 | -10 | -10 | 397 | 398 | 399 | 400 | 401 | 402 | | 1.4 | | | |
| 072 | | A | D | | | | | | 403 | 404 | 405 | 406 | 407 | | | 1.25 | | | |
| 073 | | A | D | | | | | | 408 | 409 | 410 | 411 | 412 | | | 1.1 | | | |
| 074 | | A | D | | | | | | 413 | 414 | 415 | 416 | 417 | | | 0.9 | | | |
| 075 | | A | C | | | | | | 418 | 419 | 420 | 421 | 422 | | | 0.6 | | | |
| | | | | | | | | | | | | | | | | | | | |
| 076 | -140 ABC | B | D | +10 | 0 | -11.7 | +10 | -10 | 423 | 424 | 425 | 426 | 427 | 428 | | 1.4 | | | |
| 077 | | A | D | | | | | | 429 | 430 | 431 | 432 | 433 | | | 1.25 | | | |
| 078 | | A | D | | | | | | 434 | 435 | 436 | 437 | 438 | | | 1.1 | | | |
| 079 | | A | D | | | | | | 439 | 440 | 441 | 442 | 443 | | | 0.9 | | | |
| 080 | | A | C | | | | | | 444 | 445 | 446 | 447 | 448 | | | 0.6 | | | |
| | | | | | | | | | | | | | | | | | | | |
| 081 | -140 ABC | B | E | 10 | 0 | -11.7 | -10 | +10 | 449 | 450 | 451 | 452 | 453 | 454 | | 1.4 | | | |
| 082 | | A | E | | | | | | 455 | 456 | 457 | 458 | 459 | | | 1.25 | | | |
| 083 | | A | E | | | | | | 460 | 461 | 462 | 463 | 464 | | | 1.1 | | | |
| 084 | | A | F | | | | | | 465 | 466 | 467 | 468 | 469 | | | 0.9 | | | |
| 085 | | A | O | | | | | | 470 | 471 | 472 | 473 | 474 | | | 0.6 | | | |
| | | | | | | | | | | | | | | | | | | | |

1 7 13 19 25 31 37 43 49 55 61 67 73 76

COEFFICIENTS

α OR β SCHEDULES

$E_\beta$ = 0 @ α = -4 0 8 16
-4 0 4 @ α = 4 12

$F_\beta$ = 0 @ α = -4 0 8 12
-4 0 4 @ α = 4

IDVAR (1) IDVAR (2) NDV

NASA-MSFC-MAF

TABLE III

MODEL DIMENSIONAL DATA

MODEL COMPONENT : BODY - $B_{26}$

GENERAL DESCRIPTION : Configuration 140A/B orbiter fuselage

NOTE: $B_{26}$ is identical to $B_{24}$ except underside of fuselage has been refaired to accept $W_{116}$.

MODEL SCALE: 0.030 MODEL DRAWING: SS-A00147, Release 12

DRAWING NUMBER : VL70-000143B, -000200, -000205, -006089, -000145
VL70-000140A, -000140B

| DIMENSIONS : | FULL SCALE | MODEL SCALE |
|---|---|---|
| Length (OML: Fwd Sta. $X_0$ =235), In. | 1293.3 | 38.799 |
| Length (IML: Fwd Sta X =238), In. | 1290.3 | 38.709 |
| Max Width (@ $X_0$ = 1528.3), In. | 264.0 | 7.920 |
| Max Depth (@ $X_0$ = 1464), In. | 250.0 | 7.500 |
| Fineness Ratio | 0.264 | 0.264 |
| Area - $Ft^2$ | | |
| Max. Cross-Sectional | 340.88 | 0.3068 |
| Planform | | |
| Wetted | | |
| Base | | |

TABLE III (Continued)

MODEL COMPONENT : BODY - $B_{70}$

GENERAL DESCRIPTION : Configuration 140A/B orbiter fuselage with forward fuselage RCS thruster ports, otherwise $B_{70}$ is identical to $B_{26}$.

MODEL SCALE: 0.030

DRAWING NUMBER : VL70-000140A, -000140B, -000143B, -000145, -000200, VL70-000205, -004089, -008501, -008502, -008296

DIMENSIONS :

| | FULL SCALE | MODEL SCALE |
|---|---|---|
| Length (OML: Fwd Sta $X_0$=235), In. | 1293.3 | 38.799 |
| Length (IML: Fwd Sta $X_0$ =238), In. | 1290.3 | 38.709 |
| Max Width (@ $X_0$ = 1528.3), In. | 264.0 | 7.920 |
| Max Depth (@ $X_0$ = 1464), In. | 250.0 | 7.500 |
| Fineness Ratio | 0.264 | 0.264 |
| Area - $Ft^2$ | | |
| Max. Cross-Sectional | 340.88 | 0.3068 |
| Planform | | |
| Wetted | | |
| Base | | |

TABLE III (Cont'd)

MODEL COMPONENT : CANOPY - $C_9$

GENERAL DESCRIPTION : Configuration 3A. Canopy used with fuselage $B_{26}$.

MODEL SCALE: 0.030 MODEL DWG: SS-A00147, Release 12

DRAWING NUMBER : VL70-000143A

| DIMENSIONS : | FULL SCALE | MODEL SCALE |
|---|---|---|
| Length ($X_0$=434.643 to 578), In. | 143.357 | 4.301 |
| Max Width (@ $X_0$ = 513.127), In. | 152.412 | 4.572 |
| Max Depth (@ $X_0$ = 485.0), In. | 25.00 | 0.750 |
| Fineness Ratio | | |
| Area | | |
| Max. Cross-Sectional | | |
| Planform | | |
| Wetted | | |
| Base | | |

TABLE III (Cont'd)

MODEL COMPONENT ELEVON - $E_{44}$

GENERAL DESCRIPTION 6.0 In. F.S. gaps machined into $E_{26}$ elevon. Flipper doors centerbody pieces, and tipseals are not simulated. (Data are for one of two sides.)

MODEL SCALE: 0.030

DRAWING NUMBER

DIMENSIONS

| | FULL SCALE | MODEL SCALE |
|---|---|---|
| Area - $Ft^2$ | 210.0 | 0.189 |
| Span (equivalent), In. | 349.2 | 10.476 |
| Inb'd equivalent chord, In. | 118.0 | 3.54 |
| Outb'd equivalent chord, In. | 55.19 | 1.656 |
| Ratio movable surface chord/ total surface chord | | |
| At Inb'd equiv. chord | 0.2096 | 0.2096 |
| At Outb'd equiv. chord | 0.4004 | 0.4004 |
| Sweep Back Angles, degrees | | |
| Leading Edge | 0.00 | 0.00 |
| Trailing Edge | - 10.056 | - 10.056 |
| Hingeline | 0.0 | 0.0 |
| Area Moment (Product of Area & $\bar{c}$), $Ft^3$ | 1587.25 | 0.0429 |
| Mean Aerodynamic Chord, In. | 90.7 | 2.721 |

TABLE III (Cont'd)

MODEL COMPONENT : BODY FLAP - $F_9$

GENERAL DESCRIPTION : Configuration 140A/B

MODEL SCALE: 0.030

DRAWING NUMBER : VL70-000140B, -000200

DIMENSIONS :

| | FULL SCALE | MODEL SCALE |
|---|---|---|
| Length (Chord), In. | 84.7 | 2.541 |
| Max Width , In. | 262.308 | 7.869 |
| Max Depth , In. | 23.00 | 0.690 |
| Fineness Ratio | | |
| Area - $Ft^2$ | | |
| Max. Cross-Sectional | | |
| Planform | 142.60 | 0.128 |
| Wetted | | |
| Base | 41.90 | 0.0377 |

TABLE III (Cont'd)

MODEL COMPONENT : OMS POD - $M_{16}$

GENERAL DESCRIPTION : Configuration 140C orbiter OMS pod - short pod. External contour is to referenced drawings with 1/2" added to simulate TPS.

MODEL SCALE: 0.015

DRAWING NUMBER : VL70-008401, -008410

| DIMENSIONS : | FULL SCALE | MODEL SCALE |
|---|---|---|
| Length (OMS Fwd Sta $X_0$ =1310.5), In. | 258.50 | 7.755 |
| Max Width (@ $X_0$ = 1511), In. | 136.8 | 4.104 |
| Max Depth (@ $X_0$ = 1511), In. | 74.70 | 2.241 |
| Fineness Ratio | 2.484 | 2.484 |
| Area - $Ft^2$ | | |
| Max. Cross-Sectional | 58.865 | 0.053 |
| Planform | | |
| Wetted | | |
| Base | | |

TABLE III (Cont'd)

MODEL COMPONENT: OMS NOZZLES - $N_{28}$

GENERAL DESCRIPTION: Configuration 140A/B orbiter OMS nozzles.

MODEL SCALE: 0.030

DRAWING NUMBER: VL70-000140A (Location), SS-A00106, Release 9 (Contour)

| DIMENSIONS: | FULL SCALE | MODEL SCALE |
|---|---|---|
| MACH NO. | | |
| Length - In. | | |
| Gimbal Point to Exit Plane | | |
| Throat to Exit Plane | | |
| Diameter - In. | | |
| Exit | | |
| Throat | | |
| Inlet | | |
| Area - $ft^2$ | | |
| Exit | | |
| Throat | | |
| Gimbal Point (Station) - In. | | |
| Left Nozzle | | |
| $X_0$ | 1518.0 | 45.54 |
| $Y_0$ | - 88.0 | - 2.64 |
| $Z_0$ | 492. | 14.76 |
| Right Nozzles | | |
| $X_0$ | 1518.0 | 45.54 |
| $Y_0$ | 88.0 | 2.64 |
| $Z_0$ | 492.0 | 14.76 |
| Null Position - Deg. | | |
| Left Nozzle | | |
| Pitch | 15°49' | 15°49' |
| Yaw | 12°17' | 12°17' |
| Right Nozzle | | |
| Pitch | 15°49' | 15°49' |
| Yaw | 12°17' | 12°17' |

ORIGINAL PAGE IS
OF POOR QUALITY

ORIGINAL PAGE IS
OF POOR QUALITY

TABLE III (Cont'd)

MODEL COMPONENT RUDDER - $R_5$

GENERAL DESCRIPTION Configuration 140C orbiter rudder (identical to configuration 140A/B rudder).

MODEL SCALE: 0.030

DRAWING NUMBER VL70-000146B, -000095

| DIMENSIONS | FULL SCALE | MODEL SCALE |
|---|---|---|
| Area - $Ft^2$ | 100.15 | 0.090 |
| Span (equivalent), In. | 201.00 | 6.030 |
| Inb'd equivalent chord, In. | 91.585 | 2.748 |
| Outb'd equivalent chord, In. | 50.833 | 1.525 |
| Ratio movable surface chord/ total surface chord | | |
| At Inb'd equiv. chord | 0.400 | 0.400 |
| At Outb'd equiv. chord | 0.400 | 0.400 |
| Sweep Back Angles, degrees | | |
| Leading Edge | 34.83 | 34.83 |
| Trailing Edge | 26.25 | 26.25 |
| Hingeline | 34.83 | 34.83 |
| Area Moment (Product of area & $\bar{c}$), $Ft^3$ | 610.92 | 0.0165 |
| Mean Aerodynamic Chord, In. | 73.2 | 2.196 |

TABLE III (Cont'd)

MODEL COMPONENT: VERTICAL - $V_8$

GENERAL DESCRIPTION: Configuration 140C orbiter vertical tail.

(Identical to configuration 140A/B vertical tail.)

MODEL SCALE: 0.030

DRAWING NUMBER: VL70-000140C, -000146B

| DIMENSIONS: | FULL SCALE | MODEL SCALE |
|---|---|---|
| TOTAL DATA | | |
| Area (Theo) - $Ft^2$ | | |
| Planform | 413.253 | 0.372 |
| Span (Theo) - In. | 315.72 | 9.472 |
| Aspect Ratio | 1.675 | 1.675 |
| Rate of Taper | 0.507 | 0.507 |
| Taper Ratio | 0.404 | 0.404 |
| Sweep-Back Angles, Degrees. | | |
| Leading Edge | 45.000 | 45.000 |
| Trailing Edge | 26.25 | 26.25 |
| 0.25 Element Line | 41.13 | 41.13 |
| Chords: | | |
| Root (Theo) WP | 268.50 | 8.055 |
| Tip (Theo) WP | 108.47 | 3.254 |
| MAC | 199.81 | 5.994 |
| Fus. Sta. of .25 MAC | 1463.35 | 43.901 |
| W.P. of .25 MAC | 635.52 | 19.066 |
| B.L. of .25 MAC | 0.0 | 0.0 |
| Airfoil Section | | |
| Leading Wedge Angle - Deg. | 10.0 | 10.0 |
| Trailing Wedge Angle - Deg. | 14.92 | 14.92 |
| Leading Edge Radius | 2.0 | 0.060 |
| Void Area | 13.17 | 0.0019 |
| Blanketed Area | 0.0 | 0.0 |

TABLE III (Con'l'd)

MODEL COMPONENT: WING-$W_{116}$

GENERAL DESCRIPTION: Configuration 4

NOTE: Identical to $W_{114}$ except airfoil thickness. Dihedral angle is along trailing edge of wing.

MODEL SCALE: 0.030

TEST NO.

DWG. NO. VL70-000140A, -000200

| DIMENSIONS: | FULL-SCALE | MODEL SCALE |
|---|---|---|
| TOTAL DATA | | |
| Area (Theo.) $Ft^2$ | | |
| Planform | 2690.00 | 2.421 |
| Span (Theo In. | 936.68 | 28.10 |
| Aspect Ratio | 2.265 | 2.265 |
| Rate of Taper | 1.177 | 1.177 |
| Taper Ratio | 0.200 | 0.200 |
| Dihedral Angle, degrees | 3.500 | 3.500 |
| Incidence Angle, degrees | 0.500 | 0.500 |
| Aerodynamic Twist, degrees | | |
| Sweep Back Angles, degrees | | |
| Leading Edge | 45.000 | 45.000 |
| Trailing Edge | - 10.056 | - 10.056 |
| 0.25 Element Line | 35.209 | 35.209 |
| Chords: | | |
| Root (Theo) B.P.0.0. | 689.24 | 20.677 |
| Tip, (Theo) B.P. | 137.85 | 4.136 |
| MAC | 474.81 | 14.244 |
| Fus. Sta. of .25 MAC | 1136.83 | 34.105 |
| W.P. of .25 MAC | 290.58 | 8.717 |
| B.L. of .25 MAC | 182.13 | 5.464 |
| EXPOSED DATA | | |
| Area (Theo) $Ft^2$ | 1751.50 | 1.576 |
| Span, (Theo) In. BP108 | 720.68 | 21.620 |
| Aspect Ratio | 2.059 | 2.059 |
| Taper Ratio | 0.245 | 0.245 |
| Chords | | |
| Root BP108 | 562.09 | 16.863 |
| Tip 1.00 $\frac{b}{2}$ | 137.85 | 4.136 |
| MAC | 392.83 | 11.785 |
| Fus. Sta. of .25 MAC | 1185.98 | 35.579 |
| W.P. of .25 MAC | 295.30 | 8.829 |
| B.L. of .25 MAC | 251.77 | 7.555 |
| Airfoil Section (Rockwell Mod NASA) XXXX-64 | | |
| Root $\frac{b}{2}$ = | 0.113 | 0.113 |
| Tip $\frac{b}{2}$ = | 0.120 | 0.120 |
| Data for (1) of (2) Sides | | |
| Leading Edge Cuff | | |
| Planform Area $Ft^2$ | 113.18 | 0.102 |
| Leading Edge Intersects Fus M. L. @ Sta | 500.0 | 15.0 |
| Leading Edge Intersects Wing @ Sta | 1025.0 | 30.720 |

TABLE IV.

FUSELAGE PRESSURE TAP LOCATIONS –

| ORBITER ~ IN. | | | Φ RADIAL LOCATION ~ DEGREES | | | | | | | | | | | | | | | | | | | | | |
|---|---|---|---|---|---|---|---|---|---|---|---|---|---|---|---|---|---|---|---|---|---|---|---|---|
| FULL | MODEL | $X_o/L_o$ | 0 | 20 | 40 | 55 | 70 | 90 | 105 | 110 | 120 | 135 | 140 | 150 | 151 | 156 | 162 | 165 | 169 | 174 | 180 | NO TAPS | Σ AB TAPS |
| 235 | 7.05 | 0 | 7 | | | | | | | | | | | | | | | | | | | 1 | 1 |
| 245 | 7.35 | .008 | 8 | | | | | 9 | | | | | | | | | | | | | 10 | 3 | 4 |
| 265 | 7.95 | .023 | 11 | 12 | 13 | 14 | 15 | 16 | | | 17 | | | 18 | | | | | | | 19 | 9 | 13 |
| 295 | 8.85 | .046 | | 24 | 25 | 26 | 27 | 28 | | | 29 | | | 30 | | | | | | | 31 | 8 | 21 |
| 325 | 9.75 | .070 | | 36 | 37 | 38 | 39 | 40 | | | 41 | | | 42 | | | | | | | 43 | 8 | 29 |
| 330 | 11.40 | .112 | 47 | 48 | 49 | 50 | 51 | 52 | | | 53 | | | 54 | | | | | | | 55 | 9 | 38 |
| 440 | 13.20 | .158 | | | | | | | | | | | | | | | | | | 59 | | 1 | 39 |
| 450 | 13.50 | .166 | 60 | 61 | 62 | 63 | 64 | 65 | | | 66 | | | 67 | | | | | 68 | | 69 | 10 | 49 |
| 465 | 13.95 | .177 | | | | | | | | | | | | | 73 | | 74 | | | | | 2 | 51 |
| 500 | 15.00 | .204 | 75 | 76 | 77 | 78 | 79 | 80 | | | 81 | | 82 | 83 | | | | 84 | | | 85 | 11 | 62 |
| 560 | 16.80 | .251 | 89 | | 90 | | 91 | 92 | | | 93 | | | 94 | | | | 95 | | | 96 | 8 | 70 |
| 625 | 18.75 | .301 | 98 | | 99 | | 100 | 101 | | | 102 | | | 103 | | | | 104 | | | 105 | 8 | 78 |
| 725 | 21.75 | .378 | 107 | | 108 | | 109 | 110 | | | 111 | | | 112 | | | | 113 | | | 114 | 8 | 86 |
| 880 | 26.40 | .497 | 116 | | 117 | | 118 | 119 | | | 120 | | | 121 | | | | 122 | | | 123 | 8 | 94 |
| 980 | 29.40 | .574 | 125 | | 126 | | | | | | | | | | | | | | | | | 2 | 96 |
| 1080 | 32.40 | .652 | 128 | | 129 | | 130 | 131 | | | 132 | | | 133 | | | | 134 | | | 135 | 8 | 104 |
| 1180 | 35.40 | .729 | 137 | | 138 | | 139 | 140 | | | 141 | | | 142 | | | | | | | 143 | 7 | 111 |

ORIGINAL PAGE IS
OF POOR QUALITY

TABLE IV. - Concluded.

ORIGINAL PAGE IS
OF POOR QUALITY

FUSELAGE PRESSURE TAP LOCATIONS

| ORBITER-IN. | | | Φ RADIAL LOCATION ~ DEGREES | | | | | | | | | | | | | | | | | | | | | | | |
|---|---|---|---|---|---|---|---|---|---|---|---|---|---|---|---|---|---|---|---|---|---|---|---|---|---|---|
| FULL | MODEL | $X_o/L_o$ | 0 | 20 | 40 | 55 | 70 | 90 | 105 | 110 | 120 | 135 | 140 | 150 | 151 | 156 | 162 | 165 | 169 | 174 | 180 | 305 | 320 | 340 | NO TAPS | Σ NO TAPS |
| 1245 | 37.35 | .779 | 145 | | 146 | | 147 | 148 | 149 | | 150 | 151 | | 152 | | | | 153 | | | 154 | | | | 10 | 10 |
| 1300 | 39.0 | .821 | 156 | | 157 | | 158 | 159 | 160 | | 161 | 162 | | 163 | | | | | | | 164 | | | | 9 | 19 |
| 1375 | 41.25 | .879 | 166 | | 167 | | 168 | 169 | 170 | | 171 | 172 | | 173 | | | | 174 | | | | | | | 9 | 28 |
| 1430 | 42.9 | .921 | 176 | | 177 | | 178 | 179 | 180 | | 181 | 182 | | 183 | | | | 184 | | | | | | | 9 | 37 |
| 1480 | 44.4 | .960 | 186 | | 187 | | 188 | 189 | 190 | | 191 | 192 | | 193 | | | | 194 | | | | | | | 9 | 46 |
| 1530 | 45.9 | .999 | | | | | | | | 196 198 | 197 199 | | | | | | | | | | | | | | 4 | 50 |

TABLE V.

| η | Y/b | LEFT WING PRESSURE TAP LOCATIONS | | | | | | | | | | | | | | | | | No TAPS | Σ No TAPS |
|---|---|---|---|---|---|---|---|---|---|---|---|---|---|---|---|---|---|---|---|---|
| .235 | 110 | X/c | 0 | .041 | .113 | .247 | .429 | .547 | .633 | .727 | .793 | | | | | | | | | 9 |
| | | TOP | 208 | 209 | 210 | 211 | 212 | 213 | 214 | 215 | 216 | | | | | | | | 9 | |
| | | BOT | — | — | — | — | — | — | — | — | — | | | | | | | | 0 | |
| .299 | 140 | X/c | 0 | .010 | .020 | .050 | .094 | .229 | .362 | .497 | | .700 | .834 | .865 | .900 | .965 | | | | 34 |
| | | TOP | 217 | 218 | 219 | 220 | 221 | 222 | 223 | 224 | | 225 | 226 | 227 | 228 | 229 | | | 13 | |
| | | BOT | | 230 | 231 | 232 | 233 | 234 | 235 | 236 | | 237 | 238 | 239 | 240 | 241 | | | 12 | |
| .364 | 170 | X/c | 0 | .010 | .020 | .040 | .086 | .163 | .246 | .390 | | .637 | .798 | .839 | .879 | .919 | .955 | | | 61 |
| | | TOP | 242 | 243 | 244 | 245 | 246 | 247 | 248 | 249 | | 250 | 251 | 252 | 253 | 254 | 255 | | 14 | |
| | | BOT | | 256 | 257 | 258 | 259 | 260 | 261 | 262 | | 263 | 264 | 265 | 266 | 267 | 268 | | 13 | |
| .427 | 200 | X/c | 0 | .010 | .020 | .040 | .083 | .177 | .274 | .402 | .565 | .760 | .808 | .857 | .905 | .953 | 1.00 | | | 89 |
| | | TOP | 269 | 270 | 271 | 272 | 273 | 274 | 275 | 276 | 277 | 278 | 279 | 280 | 281 | 282 | | | 14 | |
| | | BOT | | 283 | 284 | 285 | 286 | 287 | 288 | 289 | 290 | 291 | 292 | 293 | 294 | 295 | 296 | | 14 | |
| .534 | 250 | X/c | 0 | .010 | .020 | .050 | .080 | .150 | .250 | .400 | .550 | .725 | .775 | .850 | .900 | .950 | | | | 116 |
| | | TOP | 297 | 298 | 299 | 300 | 301 | 302 | 303 | 304 | 305 | 306 | 307 | 308 | 309 | 310 | | | 14 | |
| | | BOT | | 311 | 312 | 313 | 314 | 315 | 316 | 317 | 318 | 319 | 320 | 321 | 322 | 323 | | | 13 | |

TABLE V. - Concluded.

| η | Y₀ | LEFT WING PRESSURE TAP LOCATIONS | | | | | | | | | | | | | | | | NO TAPS | Σ NO TAPS |
|---|---|---|---|---|---|---|---|---|---|---|---|---|---|---|---|---|---|---|---|
| .641 | 300 | X/C | 0 | .010 | .020 | .050 | .150 | .250 | .400 | .550 | .700 | .775 | .850 | .920 | 1.00 | | | | 123 |
| | | TOP | | | | | | | | | | 333 | 334 | 335 | | | | 3 | |
| | | BOT | | | | | | | | | | 344 | 345 | 346 | 347 | | | 4 | |
| .673 | 315 | X/C | 0 | .010 | .020 | .050 | .150 | .250 | .400 | .550 | .700 | .775 | .850 | .920 | 1.00 | | | | 140 |
| | | TOP | 324 | 325 | 326 | 327 | 328 | 329 | 330 | 331 | 332 | | | | | | | 9 | |
| | | BOT | | 336 | 337 | 338 | 339 | 340 | 341 | 342 | 343 | | | | | | | 8 | |
| .780 | 365 | X/C | 0 | .010 | .020 | .050 | .150 | .250 | .650 | .750 | .850 | .950 | | | | | | | 159 |
| | | TOP | 348 | 349 | 350 | 351 | 352 | 353 | 354 | 355 | 356 | 357 | | | | | | 10 | |
| | | BOT | | 358 | 359 | 360 | 361 | 362 | 363 | 364 | 365 | 366 | | | | | | 9 | |
| .887 | 415 | X/C | 0 | .010 | .020 | .050 | .150 | .250 | .400 | .600 | .750 | .900 | 1.0 | | | | | | 179 |
| | | TOP | 367 | 368 | 369 | 370 | 371 | 372 | 373 | 374 | 375 | 376 | | | | | | 10 | |
| | | BOT | | 377 | 378 | 379 | 380 | 381 | 382 | 383 | 384 | 385 | 386 | | | | | 10 | |
| .972 | 455 | X/C | 0 | .020 | .069 | .157 | .345 | .503 | .620 | .862 | | | | | | | | | 194 |
| | | TOP | 387 | 388 | 389 | 390 | 391 | 392 | 393 | 394 | | | | | | | | 8 | |
| | | BOT | | 395 | 396 | 397 | 398 | 399 | 400 | 601 | | | | | | | | 7 | |
| 1.0 | 468.3 | X/C | .418 | .723 | | | | | | | | | | | | | | | 196 |
| | | TOP | 402 | 403 | | | | | | | | | | | | | | 2 | |
| | | BOT | | | | | | | | | | | | | | | | | |

TABLE VI.

ORBITER | VERTICAL TAIL & SPEED BRAKE

PRESSURE TAP LOCATIONS

| VERTICAL (LH ONLY) | | X/$C_V$ | | | | | | | | | | | |
|---|---|---|---|---|---|---|---|---|---|---|---|---|---|
| $Z_0$ FULL SCALE | $Z_0$ MODEL SCALE | $\eta_V$ | 0 | .025 | .05 | .15 | .30 | .52 | .685 | .775 | .90 | NO TAPS | Σ NO TAPS |
| 550 | 16.5 | .53 | 430 | 431 | 432 | 433 | 434 | 435 | 436 | 437 | | 8 | 8 |
| 600 | 18.0 | .316 | 438 | 439 | 440 | 441 | 442 | 443 | 444 | 445 | 446 | 9 | 17 |
| 645 | 19.35 | .458 | | | | | | | 1444 | 1445 | 1446 | 3 | 20 |
| 690 | 20.70 | .600 | 447 | 448 | 449 | 450 | 451 | 452 | 453 | 454 | 455 | 9 | 29 |
| 720 | 21.6 | .720 | | | | | | | 1453 | 1454 | 1455 | 3 | 32 |
| 765 | 22.95 | .840 | 456 | 457 | 458 | 459 | 460 | 461 | 462 | 463 | 464 | 9 | 41 |
| 792 | 23.76 | .925 | 465 | 466 | 467 | 468 | 469 | 470 | 471 | 472 | 473 | 9 | 50 |

| SPEED BRAKE (R H INSIDE) | | X/$SB_V$ | | | | | | | |
|---|---|---|---|---|---|---|---|---|---|
| $Z_0$ FULL SCALE | $Z_0$ MODEL SCALE | $\eta/SB$ | .10 | .25 | .40 | .65 | .90 | NO TAPS | Σ NO TAPS |
| 600 | 18.0 | .110 | 801 | 802 | 803 | 804 | 805 | 5 | 5 |
| 630 | 18.9 | .254 | 806 | 807 | 808 | 809 | 810 | 5 | 10 |
| 666 | 19.8 | .407 | 811 | 812 | 813 | 814 | 815 | 5 | 15 |
| 690 | 20.7 | .567 | 816 | 817 | 818 | 819 | 820 | 5 | 20 |
| 720 | 21.6 | .706 | 821 | 822 | 823 | 824 | 825 | 5 | 25 |
| 750 | 22.5 | .856 | 826 | 827 | 828 | 829 | 830 | 5 | 30 |

TABLE VII.

BODYFLAP PRESSURE TAP LOCATIONS

| ORBITER ~ $X_o$ | | | $\phi$ ~ DEGREES | | | |
|---|---|---|---|---|---|---|
| FULL SCALE | MODEL SCALE | $X_o/L_o$ | 0 | 40 | No. TAPS | Σ No TAPS |
| 1555 U | 46.65 | 1.018 | 200 | 201 | 2 | 2 |
| 1555 L | 46.65 | 1.018 | 202 | 203 | 2 | 4 |
| 1590 U | 47.70 | 1.046 | 204 | 205 | 2 | 6 |
| 1590 L | 47.70 | 1.046 | 206 | 207 | 2 | 8 |

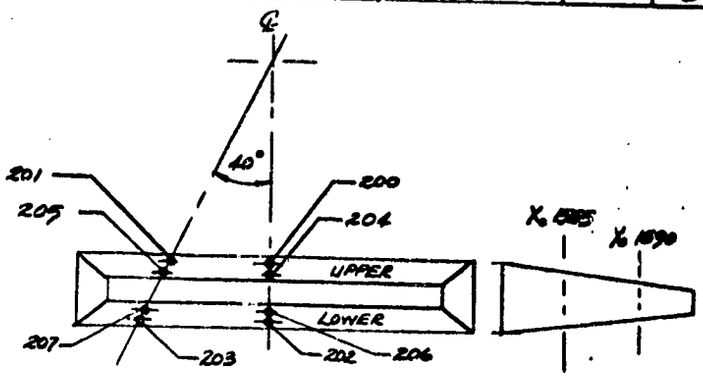


LOOKING FORWARD.

ORIGINAL PAGE IS
OF POOR QUALITY

**Notes:**

1. Positive directions of force coefficients, moment coefficients, and angles are indicated by arrows
2. For clarity, origins of wind and stability axes have been displaced from the center of gravity

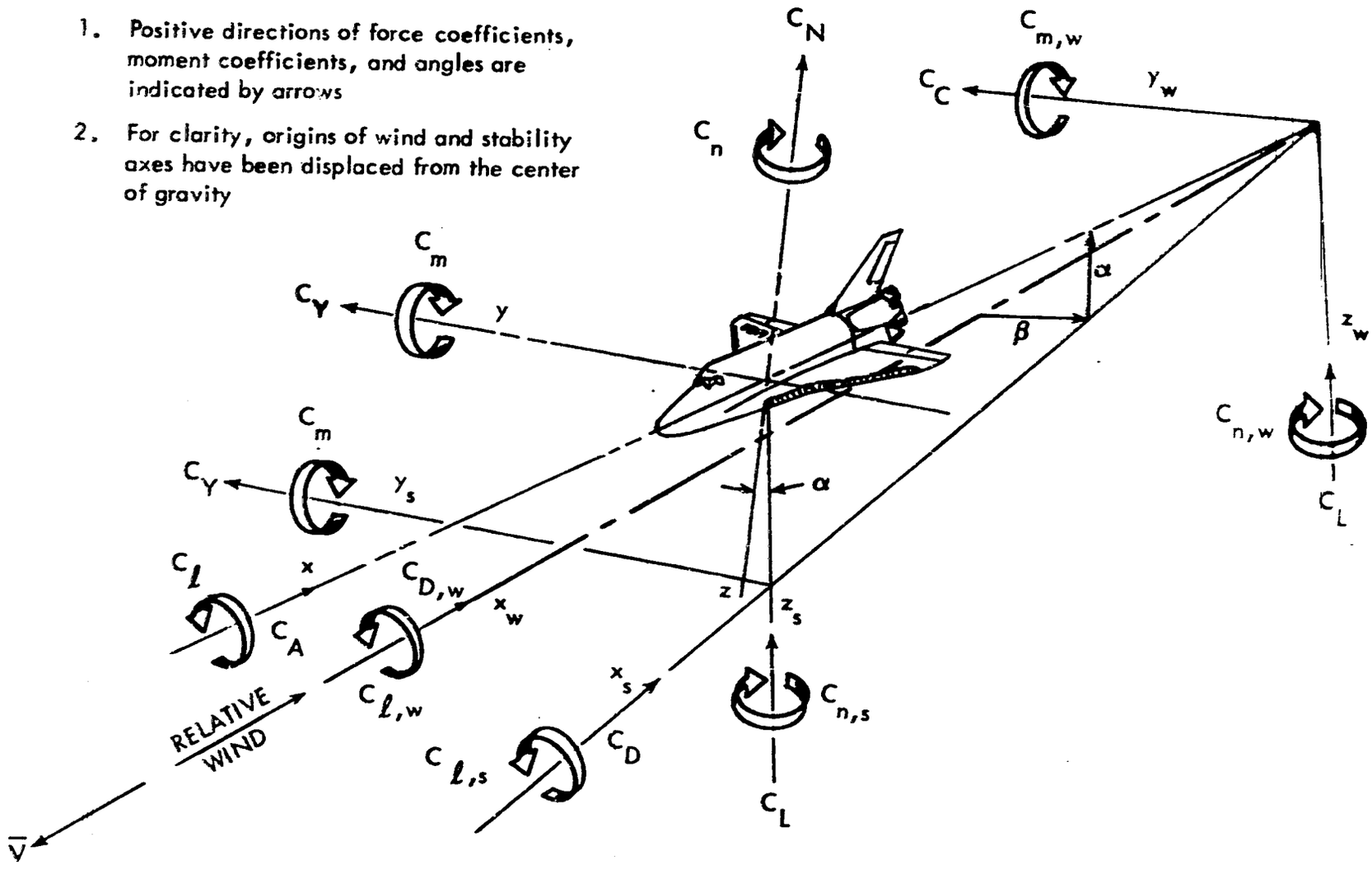


a. Orbiter Axis Systems

Figure 1. - Axis systems and sign conventions

RUDDER AND SPEED BRAKE DEFLECTIONS
(PARALLEL TO THE FRL)

| | Maximum Deflections | |
|---|---|---|
| | Vehicle [illegible] | Test CA[illegible] |
| $\delta_r$ | 22.8 | ± 10 |
| $\delta_{sb}$ | 87.2 | [illegible] |
| $\delta_a$ | -35/+20 | ± 10 |
| $\delta_{BF}$ | -11.7/+22.5 | -11.7/+22.5 |

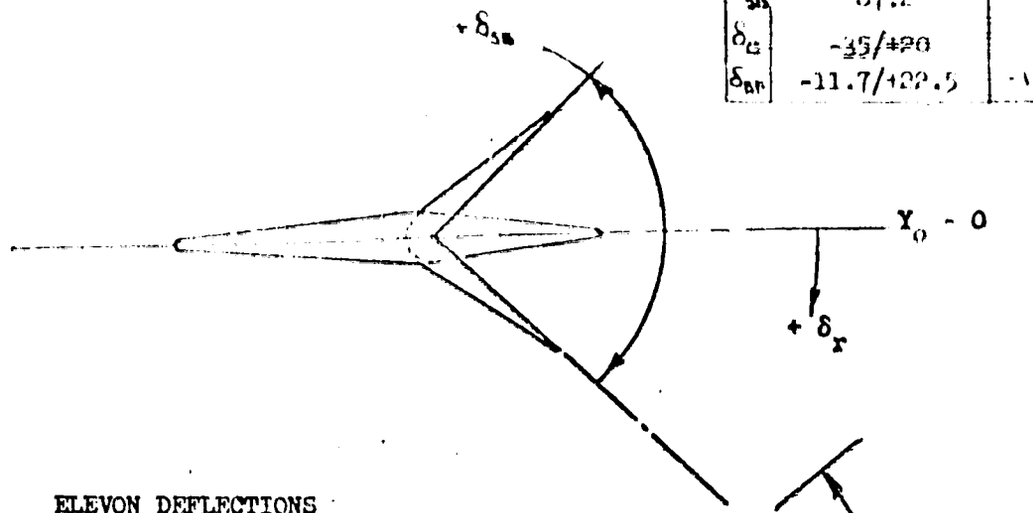


ELEVON DEFLECTIONS

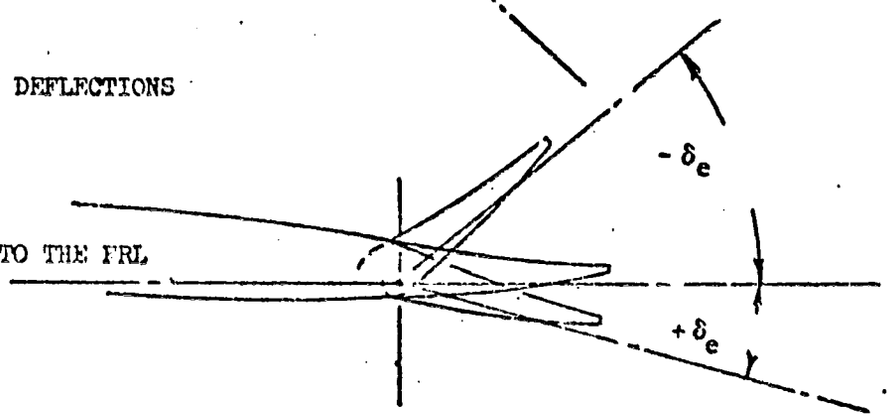


PARALLEL TO THE FRL

BODY FLAP DEFLECTIONS

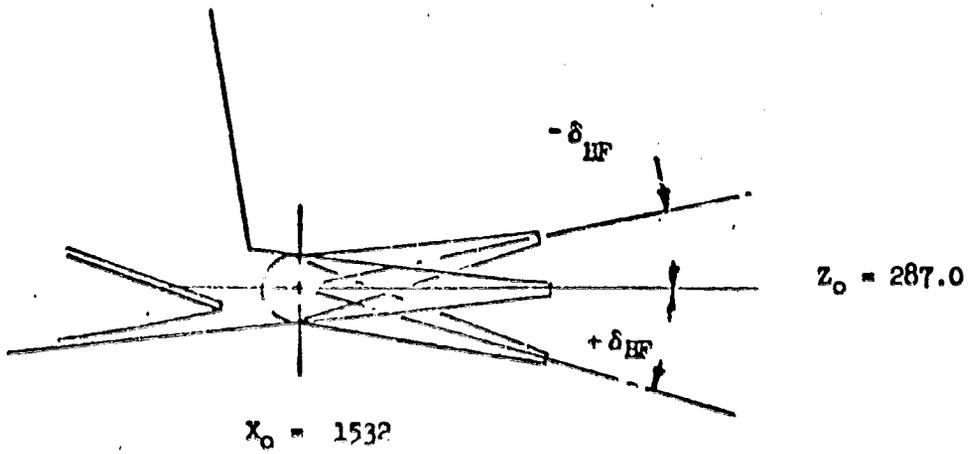


b. Definition of Angular Measurements

Figure 1. - Continued.

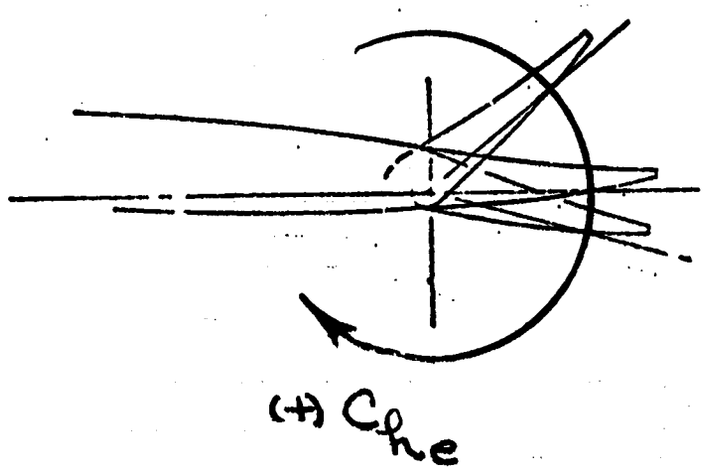


ORIGINAL PAGE IS
OF POOR QUALITY

c. Elevon Hinge Moment Sign Convention

Figure 1. - Concluded.

ORIGINAL PAGE IS
OF POOR QUALITY

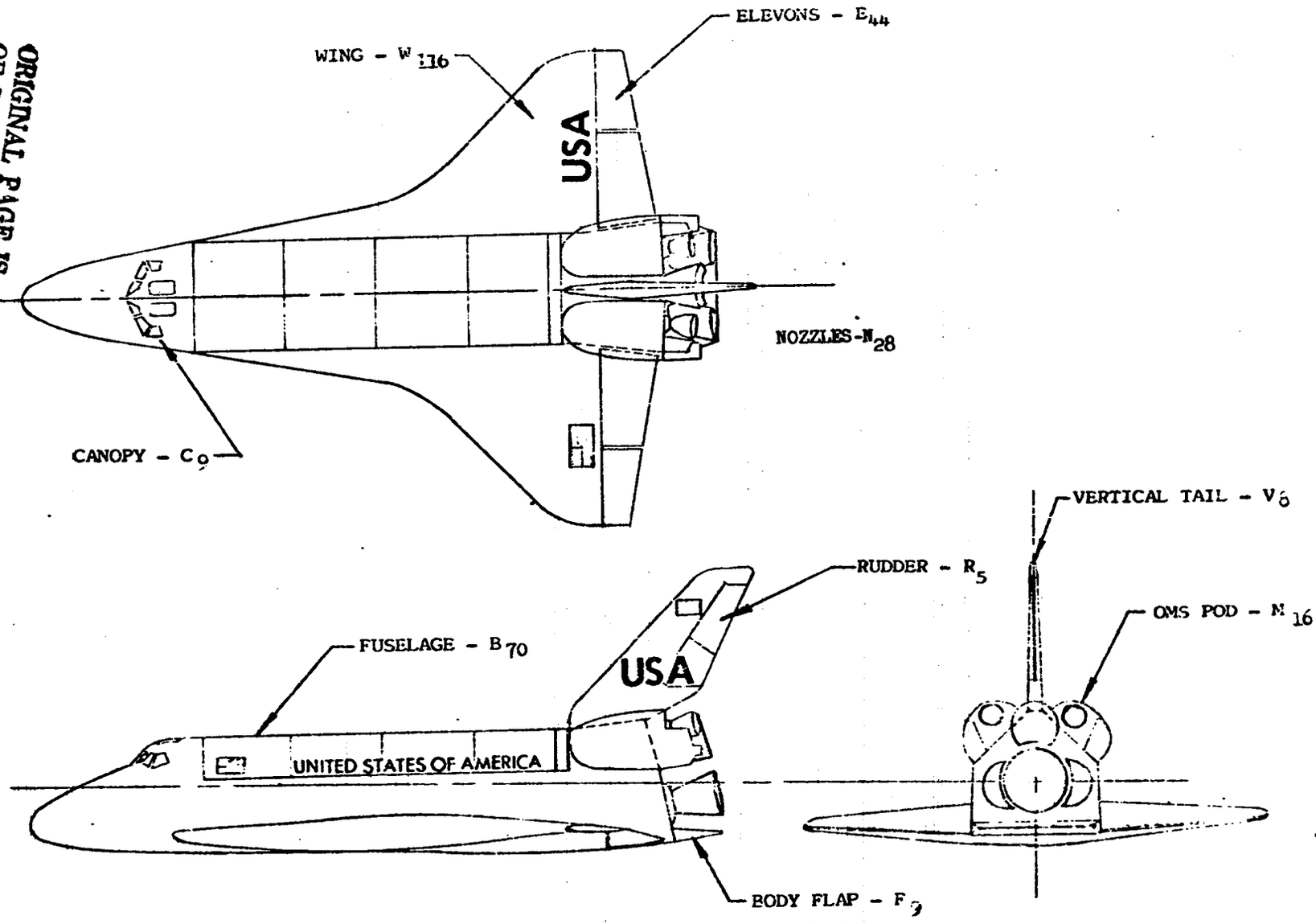


a. Configuration - 140A/B/C/R

Figure 2. - Model sketches.

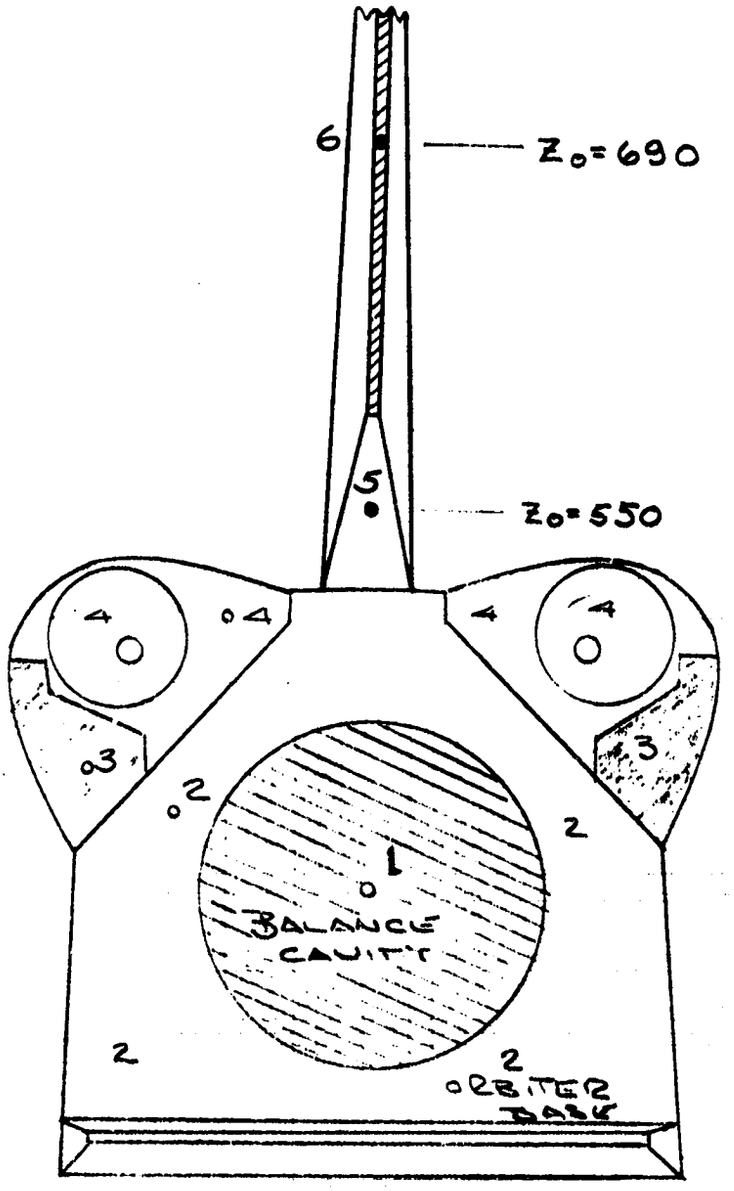


| AREA NO. | PROJECTED AXIAL VALUE |
|---|---|
| A1 | 0.076699 ft² |
| A2 | 0.215695 ft² |
| A3 | 0.034072 ft² |
| A4 | 0.074167 ft² |

b. Base Pressure Taps and Areas

Figure 2. - Continued.

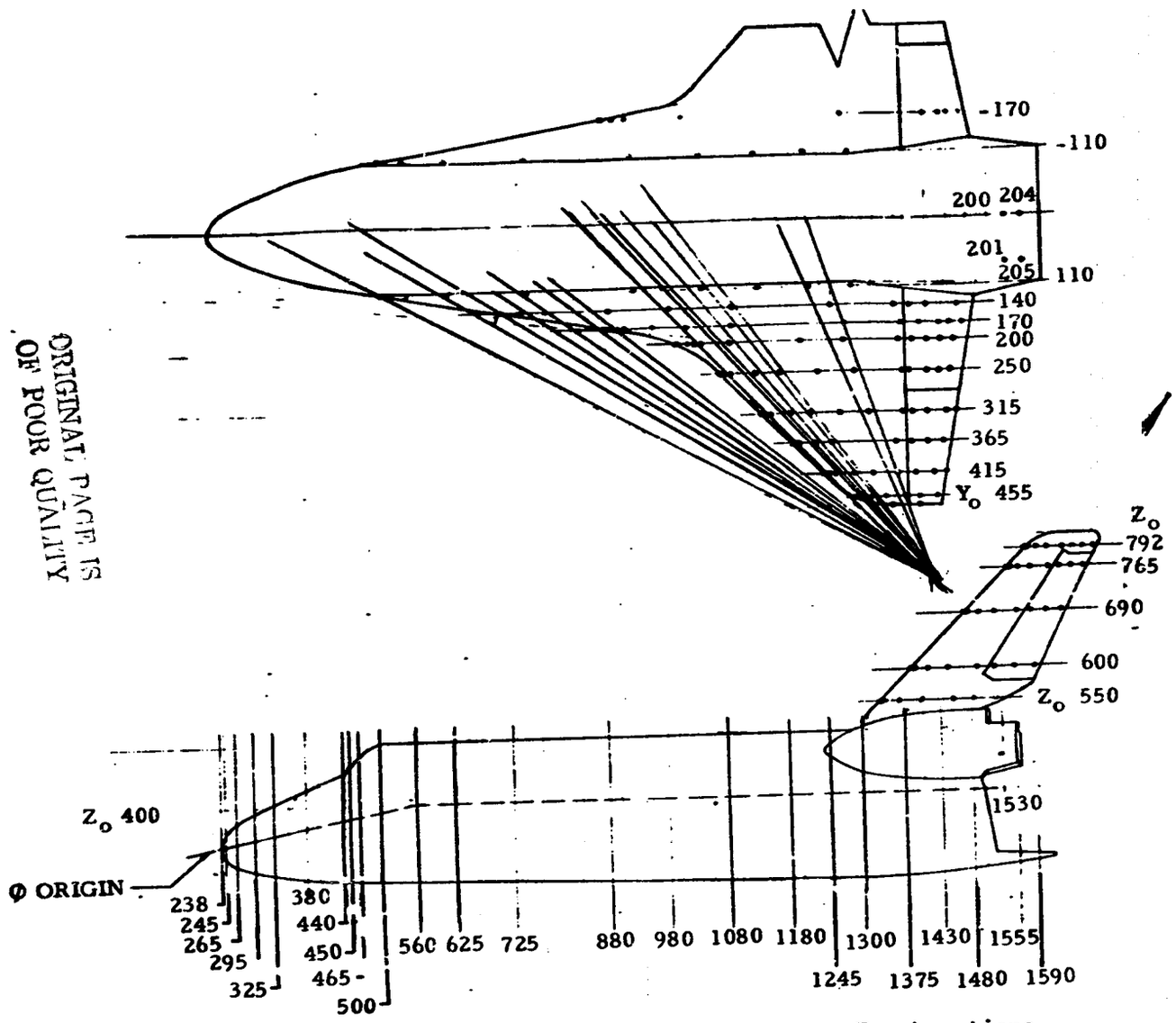


ORIGINAL PAGE IS
OF POOR QUALITY

c. Fuselage, Vertical Tail, and Wing Pressure Tap Locations
Figure 2. - Continued.

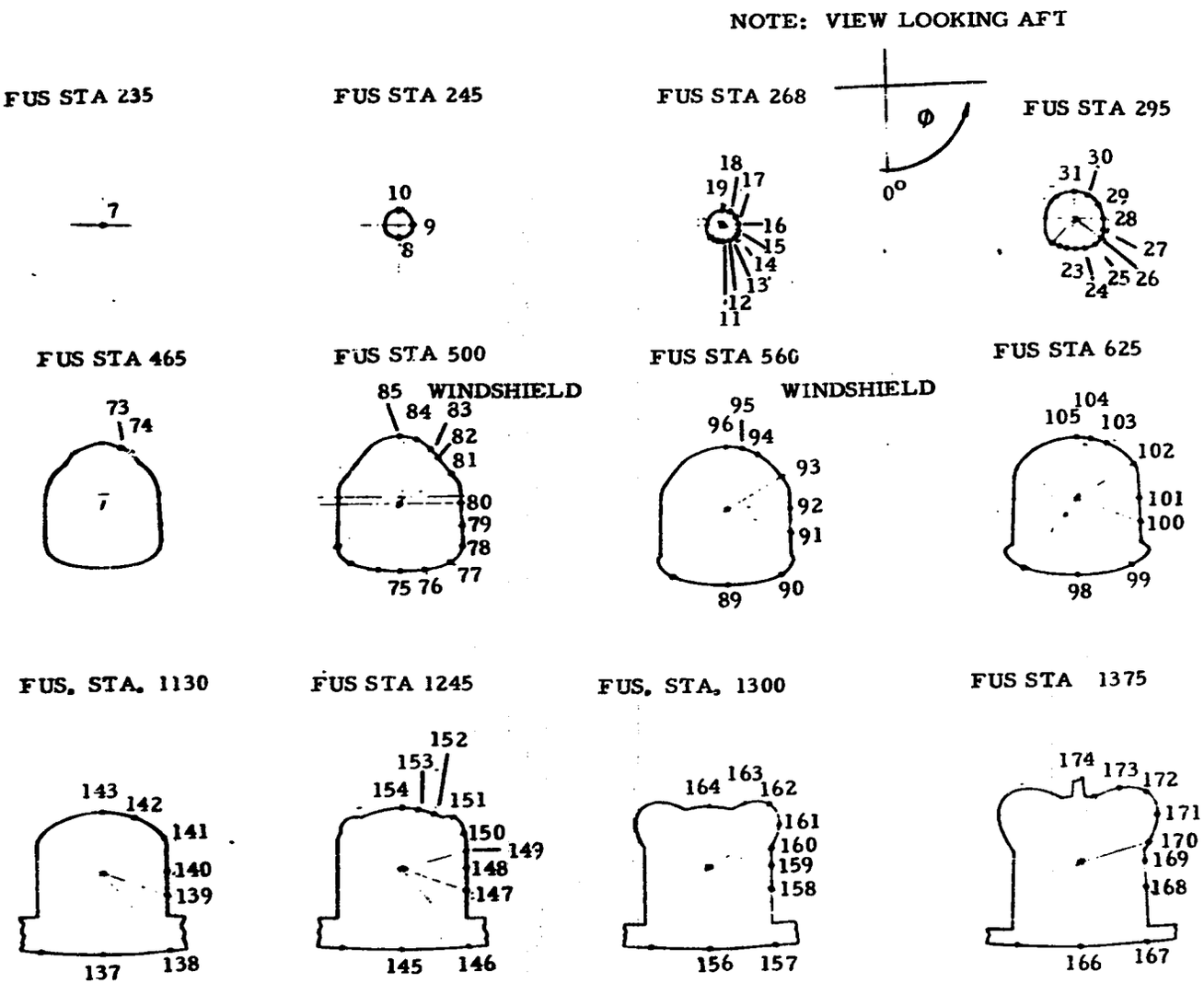


c. Fuselage, Vertical Tail, and Wing Pressure Tap Locations
Figure 2. - Continued.

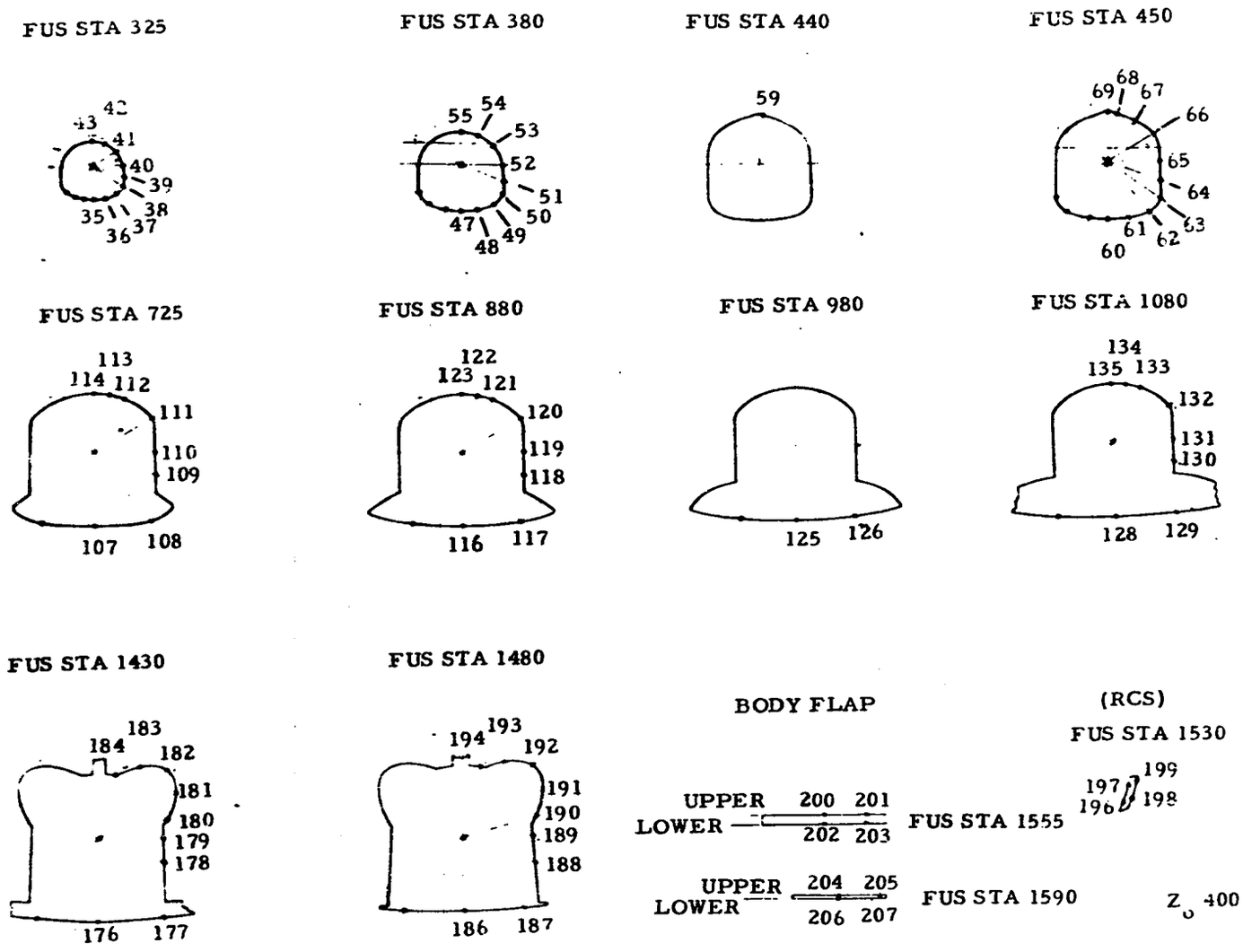


c. Fuselage, Vertical Tail, and Wing Pressure Tap Locations
Figure 2. - Continued.

PRESSURE ORIFICE LOCATION OF LEFT WING PANEL

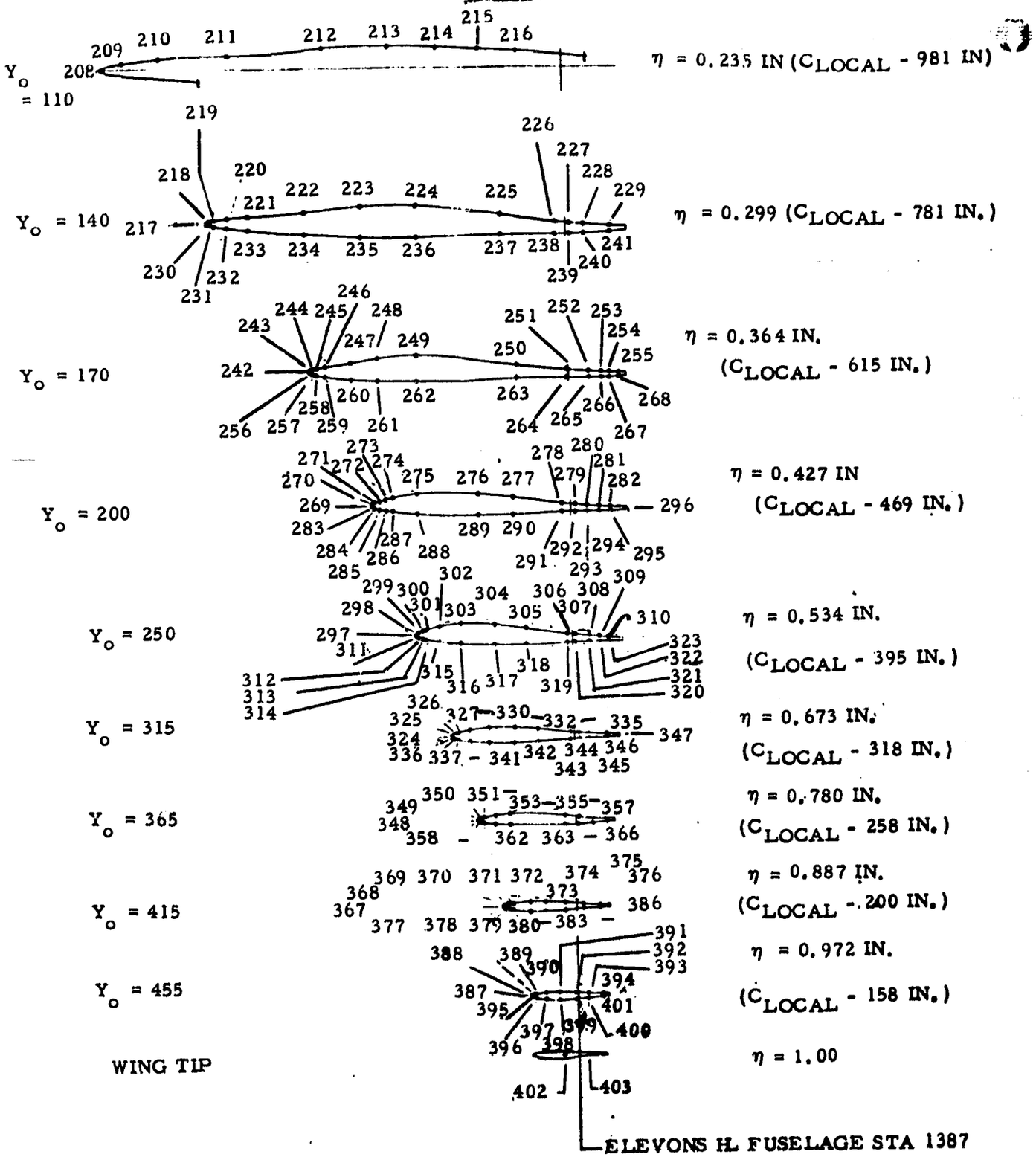


c. Fuselage, Vertical Tail, and Wing Pressure Tap Locations
Figure 2. - Continued.

ORIGINAL PAGE IS
OF POOR QUALITY

PRECEDING PAGE BLANK NOT FILMED

ORIGINAL PAGE IS OF POOR QUALITY



AMES 11-073(OA148) -140A/B/C/R ORB BODY FLAP UP (XEBF01) ( 05 AUG 75 )

REFERENCE DATA

SREF = 2690.0000 SQ.FT. XMRP = 1076.6800 IN. XO
LREF = 474.8000 IN. YMRP = .0000 IN. YO
BREF = 936.0580 IN. ZMRP = 375.0000 IN. ZO
SCALE = .0300

PARAMETRIC DATA

RUDDER = .000 SPDBRK = 55.000
BDFLAP = 16.300 L-ELVN = .000
R-ELVN = .000 MACH = 1.400

ALPHA ( 1) = -4.099 BETA ( 1) = -3.881 MACH = 1.3933 Q = 599.80 P = 441.36 RN/L = 2.9078

SECTION ( 1)BODY FLAP UPPER DEPENDENT VARIABLE CP

| X/LB | 1.0180 | 1.0460 |
|---|---|---|
| PHI | | |
| .000 | -.3315 | -.3267 |
| 40.000 | -.3630 | -.3735 |

ALPHA ( 1) = -4.089 BETA ( 2) = .154 MACH = 1.3933 Q = 599.80 P = 441.36 RN/L = 2.9078

SECTION ( 1)BODY FLAP UPPER DEPENDENT VARIABLE CP

| X/LB | 1.0180 | 1.0460 |
|---|---|---|
| PHI | | |
| .000 | -.3271 | -.3209 |
| 40.000 | -.3627 | -.3740 |

ALPHA ( 1) = -4.099 BETA ( 3) = 4.236 MACH = 1.3933 Q = 599.80 P = 441.36 RN/L = 2.9078

SECTION ( 1)BODY FLAP UPPER DEPENDENT VARIABLE CP

| X/LB | 1.0180 | 1.0460 |
|---|---|---|
| PHI | | |
| .000 | -.3382 | -.3387 |
| 40.000 | -.3500 | -.3638 |

ALPHA ( 2) = -.076 BETA ( 1) = -3.908 MACH = 1.3937 Q = 599.50 P = 440.89 RN/L = 2.9103

SECTION ( 1)BODY FLAP UPPER DEPENDENT VARIABLE CP

| X/LB | 1.0180 | 1.0460 |
|---|---|---|
| PHI | | |
| .000 | -.3298 | -.3321 |
| 40.000 | -.3500 | -.3603 |

AMES 11-073(OA148) -140A/B/C/R ORB BODY FLAP UP (XE8F01)

ALPHA ( 2) = -.07[illegible] BETA ( 2) = .147 MACH = 1.3937 Q = 599.50 P = 440.89 RN/L = 2.9103

SECTION ( 1)BODY FLAP UPPER DEPENDENT VARIABLE CP

| X/LB | 1.0180 | 1.0460 |
|---|---|---|
| PHI | | |
| .000 | -.3270 | -.3313 |
| 40.000 | -.3477 | -.3640 |

ALPHA ( 2) = -.058 BETA ( 3) = 4.215 MACH = 1.3937 Q = 599.50 P = 440.89 RN/L = 2.9103

SECTION ( 1)BODY FLAP UPPER DEPENDENT VARIABLE CP

| X/LB | 1.0180 | 1.0460 |
|---|---|---|
| PHI | | |
| .000 | -.3471 | -.3514 |
| 40.000 | -.3409 | -.3579 |

ALPHA ( 3) = 3.825 BETA ( 1) = -3.904 MACH = 1.3940 Q = 600.01 P = 441.12 RN/L = 2.9038

SECTION ( 1)BODY FLAP UPPER DEPENDENT VARIABLE CP

| X/LB | 1.0180 | 1.0460 |
|---|---|---|
| PHI | | |
| .000 | -.3351 | -.3391 |
| 40.000 | -.3479 | -.3575 |

ALPHA ( 3) = 3.826 BETA ( 2) = .146 MACH = 1.3940 Q = 600.01 P = 441.12 RN/L = 2.9038

SECTION ( 1)BODY FLAP UPPER DEPENDENT VARIABLE CP

| X/LB | 1.0180 | 1.0460 |
|---|---|---|
| PHI | | |
| .000 | -.3357 | -.3424 |
| 40.000 | -.3383 | -.3481 |

ALPHA ( 3) = 3.827 BETA ( 3) = 4.205 MACH = 1.3940 Q = 600.01 P = 441.12 RN/L = 2.9038

SECTION ( 1)BODY FLAP UPPER DEPENDENT VARIABLE CP

| X/LB | 1.0180 | 1.0460 |
|---|---|---|
| PHI | | |
| .000 | -.3433 | -.3514 |
| 40.000 | -.3405 | -.3595 |

AMES 11-073(OA148) -140A/B/C/R ORB BODY FLAP UP (XE8F01)

ALPHA ( 4) = 7.859 BETA ( 1) = -3.903 MACH = 1.3935 Q = 599.60 P = 441.12 RN/L = 2.9058

SECTION ( 1)BODY FLAP UPPER DEPENDENT VARIABLE CP

| X/LB | 1.0180 | 1.0460 |
|---|---|---|
| PHI | | |
| .000 | -.3521 | -.3542 |
| 40.000 | -.3597 | -.3745 |

ALPHA ( 4) = 7.859 BETA ( 2) = .143 MACH = 1.3935 Q = 599.60 P = 441.12 RN/L = 2.9058

SECTION ( 1)BODY FLAP UPPER DEPENDENT VARIABLE CP

| X/LB | 1.0180 | 1.0460 |
|---|---|---|
| PHI | | |
| .000 | -.3499 | -.3539 |
| 40.000 | -.3542 | -.3682 |

ALPHA ( 4) = 7.869 BETA ( 3) = 4.207 MACH = 1.3935 Q = 599.60 P = 441.12 RN/L = 2.9058

SECTION ( 1)BODY FLAP UPPER DEPENDENT VARIABLE CP

| X/LB | 1.0180 | 1.0460 |
|---|---|---|
| PHI | | |
| .000 | -.3557 | -.3593 |
| 40.000 | -.3522 | -.3746 |

ALPHA ( 5) = 11.904 BETA ( 1) = -3.884 MACH = 1.3941 Q = 599.51 P = 440.65 RN/L = 2.9230

SECTION ( 1)BODY FLAP UPPER DEPENDENT VARIABLE CP

| X/LB | 1.0180 | 1.0460 |
|---|---|---|
| PHI | | |
| .000 | -.3753 | -.3734 |
| 40.000 | -.3624 | -.3713 |

ALPHA ( 5) = 11.913 BETA ( 2) = .151 MACH = 1.3941 Q = 599.51 P = 440.65 RN/L = 2.9230

SECTION ( 1)BODY FLAP UPPER DEPENDENT VARIABLE CP

| X/LB | 1.0180 | 1.0460 |
|---|---|---|
| PHI | | |
| .000 | -.3723 | -.3715 |
| 40.000 | -.3597 | -.3873 |

AMES 11-073(OA148) -140A/B/C/R ORB BODY FLAP UP (XE8F01)

ALPHA ( 5) = 11.909 BETA ( 3) = 4.219 MACH = 1.3941 Q = 599.51 P = 440.65 RN/L = 2.9230

SECTION ( 1)BODY FLAP UPPER DEPENDENT VARIABLE CP

| X/LB | 1.0180 | 1.0460 |
|---|---|---|
| PHI | | |
| .000 | -.3706 | -.3609 |
| 40.000 | -.3854 | -.3938 |

ALPHA ( 6) = 15.872 BETA ( 1) = -3.862 MACH = 1.3935 Q = 599.60 P = 441.12 RN/L = 2.9239

SECTION ( 1)BODY FLAP UPPER DEPENDENT VARIABLE CP

| X/LB | 1.0180 | 1.0460 |
|---|---|---|
| PHI | | |
| .000 | -.3884 | -.3707 |
| 40.000 | -.3841 | -.3862 |

ALPHA ( 6) = 15.886 BETA ( 2) = .149 MACH = 1.3935 Q = 599.60 P = 441.12 RN/L = 2.9239

SECTION ( 1)BODY FLAP UPPER DEPENDENT VARIABLE CP

| X/LB | 1.0180 | 1.0460 |
|---|---|---|
| PHI | | |
| .000 | -.3936 | -.3660 |
| 40.000 | -.4003 | -.4163 |

ALPHA ( 6) = 15.901 BETA ( 3) = 4.249 MACH = 1.3935 Q = 599.60 P = 441.12 RN/L = 2.9239

SECTION ( 1)BODY FLAP UPPER DEPENDENT VARIABLE CP

| X/LB | 1.0180 | 1.0460 |
|---|---|---|
| PHI | | |
| .000 | -.3865 | -.3598 |
| 40.000 | -.4061 | -.4183 |

AMES 11-073(OA148) -140A/B/C/R ORB BODY FLAP UP (XEEF02) ( 05 AUG 75 )

REFERENCE DATA

SREF = 2690.0000 SQ.FT. XMRP = 1076.6800 IN. XO
LREF = 474.8000 IN. YMRP = .0000 IN. YO
BREF = 936.0880 IN. ZMRP = 375.0000 IN. ZO
SCALE = .0300

PARAMETRIC DATA

RUDDER = .000 SPDBRK = 55.000
BDFLAP = 16.300 L-ELVN = .000
R-ELVN = .000 MACH = 1.250

ALPHA ( 1) = -4.081 BETA ( 1) = -3.888 MACH = 1.2475 Q = 599.57 P = 550.40 RN/L = 3.0108

SECTION ( 1)BODY FLAP UPPER DEPENDENT VARIABLE CP

| X/LB | 1.0180 | 1.0460 |
|---|---|---|
| PHI | | |
| .000 | -.3656 | -.3688 |
| 40.000 | -.3936 | -.4079 |

ALPHA ( 1) = -4.075 BETA ( 2) = .154 MACH = 1.2475 Q = 599.57 P = 550.40 RN/L = 3.0108

SECTION ( 1)BODY FLAP UPPER DEPENDENT VARIABLE CP

| X/LB | 1.0180 | 1.0460 |
|---|---|---|
| PHI | | |
| .000 | -.3564 | -.3518 |
| 40.000 | -.3809 | -.3976 |

ALPHA ( 1) = -4.083 BETA ( 3) = 4.234 MACH = 1.2475 Q = 599.57 P = 550.40 RN/L = 3.0108

SECTION ( 1)BODY FLAP UPPER DEPENDENT VARIABLE CP

| X/LB | 1.0180 | 1.0460 |
|---|---|---|
| PHI | | |
| .000 | -.3714 | -.3754 |
| 40.000 | -.3768 | -.4000 |

ALPHA ( 2) = -.037 BETA ( 1) = -3.909 MACH = 1.2477 Q = 599.51 P = 550.16 RN/L = 3.0131

SECTION ( 1)BODY FLAP UPPER DEPENDENT VARIABLE CP

| X/LB | 1.0180 | 1.0460 |
|---|---|---|
| PHI | | |
| .000 | -.3718 | -.3709 |
| 40.000 | -.3864 | -.3926 |

AMES 11-073(OA148) -140A/B/C/R ORB BODY FLAP UP (XEBF02)

ALPHA ( 2) = -.032 BETA ( 2) = .147 MACH = 1.2477 Q = 599.51 P = 550.16 RN/L = 3.0131

SECTION ( 1)BODY FLAP UPPER DEPENDENT VARIABLE CP

| X/LB | 1.0180 | 1.0460 |
|---|---|---|
| PHI | | |
| .000 | -.3622 | -.3696 |
| 40.000 | -.3667 | -.3853 |

ALPHA ( 2) = -.038 BETA ( 3) = 4.211 MACH = 1.2477 Q = 599.51 P = 550.16 RN/L = 3.0131

SECTION ( 1)BODY FLAP UPPER DEPENDENT VARIABLE CP

| X/LB | 1.0180 | 1.0460 |
|---|---|---|
| PHI | | |
| .000 | -.3885 | -.3947 |
| 40.000 | -.3606 | -.3773 |

ALPHA ( 3) = 3.858 BETA ( 1) = -3.910 MACH = 1.2468 Q = 599.65 P = 551.10 RN/L = 3.0140

SECTION ( 1)BODY FLAP UPPER DEPENDENT VARIABLE CP

| X/LB | 1.0180 | 1.0460 |
|---|---|---|
| PHI | | |
| .000 | -.3727 | -.3745 |
| 40.000 | -.3858 | -.3941 |

ALPHA ( 3) = 3.859 BETA ( 2) = .139 MACH = 1.2468 Q = 599.65 P = 551.10 RN/L = 3.0140

SECTION ( 1)BODY FLAP UPPER DEPENDENT VARIABLE CP

| X/LB | 1.0180 | 1.0460 |
|---|---|---|
| PHI | | |
| .000 | -.3724 | -.3786 |
| 40.000 | -.3757 | -.3919 |

ALPHA ( 3) = 3.860 BETA ( 3) = 4.204 MACH = 1.2468 Q = 599.65 P = 551.10 RN/L = 3.0140

SECTION ( 1)BODY FLAP UPPER DEPENDENT VARIABLE CP

| X/LB | 1.0180 | 1.0460 |
|---|---|---|
| PHI | | |
| .000 | -.3929 | -.3944 |
| 40.000 | -.3755 | -.3863 |

AMES 11-073(OA148) -140A/B/C/R ORB BODY FLAP UP (XEBFD2)

ALPHA ( 4) = 7.842 BETA ( 1) = -3.905 MACH = 1.2465 Q = 599.60 P = .34 RN/L = 3.0137

SECTION ( 1)BODY FLAP UPPER DEPENDENT VARIABLE CP

| X/LB | 1.0180 | 1.0460 |
|---|---|---|
| PHI | | |
| .000 | -.3929 | -.3890 |
| 40.000 | -.4019 | -.4148 |

ALPHA ( 4) = 7.841 BETA ( 2) = .143 MACH = 1.2465 Q = 599.60 P = 551.34 RN/L = 3.0137

SECTION ( 1)BODY FLAP UPPER DEPENDENT VARIABLE CP

| X/LB | 1.0180 | 1.0460 |
|---|---|---|
| PHI | | |
| .000 | -.3922 | -.3948 |
| 40.000 | -.4005 | -.4170 |

ALPHA ( 4) = 7.841 BETA ( 3) = 4.209 MACH = 1.2465 Q = 599.60 P = 551.34 RN/L = 3.0137

SECTION ( 1)BODY FLAP UPPER DEPENDENT VARIABLE CP

| X/LB | 1.0180 | 1.0460 |
|---|---|---|
| PHI | | |
| .000 | -.3978 | -.4009 |
| 40.000 | -.3911 | -.4188 |

ALPHA ( 5) = 11.942 BETA ( 1) = -3.887 MACH = 1.2452 Q = 599.20 P = 552.04 RN/L = 3.0172

SECTION ( 1)BODY FLAP UPPER DEPENDENT VARIABLE CP

| X/LB | 1.0180 | 1.0460 |
|---|---|---|
| PHI | | |
| .000 | -.4165 | -.4135 |
| 40.000 | -.4138 | -.4209 |

ALPHA ( 5) = 11.952 BETA ( 2) = .149 MACH = 1.2452 Q = 599.20 P = 552.04 RN/L = 3.0172

SECTION ( 1)BODY FLAP UPPER DEPENDENT VARIABLE CP

| X/LB | 1.0180 | 1.0460 |
|---|---|---|
| PHI | | |
| .000 | -.4058 | -.4015 |
| 40.000 | -.4211 | -.4416 |

AMES 11-073(OA148) -140/'B/C/R ORB BODY FLAP UP (XEBF02)

ALPHA ( 5) = 11.946 BETA ( 3) = 4.215 MACH = 1.2452 Q = 599.20 P = 552.04 RN/L = 3.0172

SECTION ( 1)BODY FLAP UPPER DEPENDENT VARIABLE CP

| X/LB | 1.0180 | 1.0460 |
|---|---|---|
| PHI | | |
| .000 | -.4133 | -.4178 |
| 40.000 | -.4198 | -.4494 |

ORIGINAL PAGE IS
OF POOR QUALITY



AMES 11-073(OA148) -140A/B/C/R ORB BODY FLAP UP (XEBF03) ( 05 AUG 75 )

REFERENCE DATA

SREF = 2690.0000 SQ.FT. XMRP = 1076.6800 IN. XO
LREF = 474.8000 IN. YMRP = .0000 IN. YO
BREF = 936.0680 IN. ZMRP = 375.0000 IN. ZO
SCALE = .0300

PARAMETRIC DATA

RUDDER = .000 SPDBRK = 55.000
BDFLAP = 16.300 L-ELVN = .000
R-ELVN = .000 MACH = 1.100

ALPHA ( 1) = -4.048 BETA ( 1) = -3.881 MACH = 1.0978 Q = 599.56 P = 710.72 RN/L = 3.1865

SECTION ( 1)BODY FLAP UPPER DEPENDENT VARIABLE CP

| X/LB | 1.0180 | 1.0460 |
|---|---|---|
| PHI | | |
| .000 | -.4097 | -.4201 |
| 40.000 | -.4305 | -.4432 |

ALPHA ( 1) = -4.035 BETA ( 2) = .153 MACH = 1.0978 Q = 599.56 P = 710.72 RN/L = 3.1865

SECTION ( 1)BODY FLAP UPPER DEPENDENT VARIABLE CP

| X/LB | 1.0180 | 1.0460 |
|---|---|---|
| PHI | | |
| .000 | -.4046 | -.4149 |
| 40.000 | -.4121 | -.4403 |

ALPHA ( 1) = -4.044 BETA ( 3) = 4.236 MACH = 1.0978 Q = 599.56 P = 710.72 RN/L = 3.1865

SECTION ( 1)BODY FLAP UPPER DEPENDENT VARIABLE CP

| X/LB | 1.0180 | 1.0460 |
|---|---|---|
| PHI | | |
| .000 | -.4155 | -.4322 |
| 40.000 | -.4155 | -.4606 |

ALPHA ( 2) = -.027 BETA ( 1) = -3.903 MACH = 1.0988 Q = 599.62 P = 709.54 RN/L = 3.1868

SECTION ( 1)BODY FLAP UPPER DEPENDENT VARIABLE CP

| X/LB | 1.0180 | 1.0460 |
|---|---|---|
| PHI | | |
| .000 | -.4155 | -.4129 |
| 40.000 | -.4275 | -.4384 |

AMES 11-073(OA148) -140A/B/C/R ORB BODY FLAP UP (XEBF03)

ALPHA ( 2) = -.023 BETA ( 2) = .144 MACH = 1.0988 Q = 599.62 P = 709.54 RN/L = 3.1868

SECTION ( 1)BODY FLAP UPPER DEPENDENT VARIABLE CP

| X/LB | 1.0180 | 1.0460 |
|---|---|---|
| PHI | | |
| .000 | -.4069 | -.4174 |
| 40.000 | -.4121 | -.4312 |

ALPHA ( 2) = -.029 BETA ( 3) = 4.209 MACH = 1.0988 Q = 599.62 P = 709.54 RN/L = 3.1868

SECTION ( 1)BODY FLAP UPPER DEPENDENT VARIABLE CP

| X/LB | 1.0180 | 1.0460 |
|---|---|---|
| PHI | | |
| .000 | -.4265 | -.4332 |
| 40.000 | -.3860 | -.4001 |

ALPHA ( 3) = 3.833 BETA ( 1) = -3.903 MACH = 1.0982 Q = 599.43 P = 710.01 RN/L = 3.1855

SECTION ( 1)BODY FLAP UPPER DEPENDENT VARIABLE CP

| X/LB | 1.0180 | 1.0460 |
|---|---|---|
| PHI | | |
| .000 | -.4179 | -.4153 |
| 40.000 | -.4327 | -.4329 |

ALPHA ( 3) = 3.894 BETA ( 2) = .147 MACH = 1.0982 Q = 599.43 P = 710.01 RN/L = 3.1855

SECTION ( 1)BODY FLAP UPPER DEPENDENT VARIABLE CP

| X/LB | 1.0180 | 1.0460 |
|---|---|---|
| PHI | | |
| .000 | -.4151 | -.4225 |
| 40.000 | -.4225 | -.4433 |

ALPHA ( 3) = 3.895 BETA ( 3) = 4.201 MACH = 1.0982 Q = 599.43 P = 710.01 RN/L = 3.1855

SECTION ( 1)BODY FLAP UPPER DEPENDENT VARIABLE CP

| X/LB | 1.0180 | 1.0460 |
|---|---|---|
| PHI | | |
| .000 | -.4372 | -.4365 |
| 40.000 | -.4136 | -.4176 |

AMES 11-073(OA148) -140A/B/C/R ORB BODY FLAP UP (XE8F03)

ALPHA ( 4) = 7.886 BETA ( 1) = -3.639 MACH = 1.0976 Q = 599.10 P = 710.48 RN/L = 3.1859

SECTION ( 1)BODY FLAP UPPER DEPENDENT VARIABLE CP

| X/LB | 1.0180 | 1.0460 |
|---|---|---|
| PHI | | |
| .000 | -.4416 | -.4440 |
| 40.000 | -.4548 | -.4610 |

ALPHA ( 4) = 7.886 BETA ( 2) = .144 MACH = 1.0976 Q = 599.10 P = 710.48 RN/L = 3.1859

SECTION ( 1)BODY FLAP UPPER DEPENDENT VARIABLE CP

| X/LB | 1.0180 | 1.0460 |
|---|---|---|
| PHI | | |
| .000 | -.4375 | -.4409 |
| 40.000 | -.4370 | -.4526 |

ALPHA ( 4) = 7.886 BETA ( 3) = 4.200 MACH = 1.0976 Q = 599.10 P = 710.48 RN/L = 3.1859

SECTION ( 1)BODY FLAP UPPER DEPENDENT VARIABLE CP

| X/LB | 1.0180 | 1.0460 |
|---|---|---|
| PHI | | |
| .000 | -.4562 | -.4619 |
| 40.000 | -.4416 | -.4579 |

ALPHA ( 5) = 11.990 BETA ( 1) = -3.881 MACH = 1.0978 Q = 599.38 P = 710.48 RN/L = 3.1856

SECTION ( 1)BODY FLAP UPPER DEPENDENT VARIABLE CP

| X/LB | 1.0180 | 1.0460 |
|---|---|---|
| PHI | | |
| .000 | -.4658 | -.4655 |
| 40.000 | -.4739 | -.4856 |

ALPHA ( 5) = 11.997 BETA ( 2) = .149 MACH = 1.0978 Q = 599.38 P = 710.48 RN/L = 3.1856

SECTION ( 1)BODY FLAP UPPER DEPENDENT VARIABLE CP

| X/LB | 1.0180 | 1.0460 |
|---|---|---|
| PHI | | |
| .000 | -.4345 | -.4448 |
| 40.000 | -.4488 | -.4723 |

AMES 11-073(OA148) -140A/B/C/R ORB BODY FLAP UP (XE8F03)

ALPHA ( 5) = 11.992 BETA ( 3) = 4.212 MACH = 1.0978 Q = 599.38 P = 710.48 RN/L = 3.1856

SECTION ( 1)BODY FLAP UPPER DEPENDENT VARIABLE CP

| X/LB | 1.0180 | 1.0460 |
|---|---|---|
| PHI | | |
| .000 | -.4732 | -.4773 |
| 40.000 | -.4668 | -.4988 |

AMES 11-073(OA148) -140A/B/C/R ORB BODY FLAP UP (XE8F04) ( 05 AUG 75 )

REFERENCE DATA

SREF = 2690.0000 SQ.FT. XMRP = 1076.6800 IN. XO
LREF = 474.8000 IN. YMRP = .0000 IN. YO
BREF = 936.0680 IN. ZMRP = 375.0000 IN. ZO
SCALE = .0300

PARAMETRIC DATA

RUDDER = .000 SPDBRK = 55.000
BDFLAP = 16.300 L-ELVN = .000
R-ELVN = .000 MACH = .900

ALPHA ( 1) = -4.058 BETA ( 1) = -3.880 MACH = .89913 Q = 599.67 P = 1059.7 RN/L = 3.5733

SECTION ( 1)BODY FLAP UPPER DEPENDENT VARIABLE CP

| X/LB | 1.0180 | 1.0460 |
|---|---|---|
| PHI | | |
| .000 | -.3122 | -.3203 |
| 40.000 | -.3036 | -.3423 |

ALPHA ( 1) = -4.036 BETA ( 2) = .153 MACH = .89913 Q = 599.67 P = 1059.7 RN/L = 3.5733

SECTION ( 1)BODY FLAP UPPER DEPENDENT VARIABLE CP

| X/LB | 1.0180 | 1.0460 |
|---|---|---|
| PHI | | |
| .000 | -.3005 | -.3071 |
| 40.000 | -.3207 | -.3479 |

ALPHA ( 1) = -4.047 BETA ( 3) = 4.237 MACH = .89913 Q = 599.67 P = 1059.7 RN/L = 3.5733

SECTION ( 1)BODY FLAP UPPER DEPENDENT VARIABLE CP

| X/LB | 1.0180 | 1.0460 |
|---|---|---|
| PHI | | |
| .000 | -.3006 | -.3037 |
| 40.000 | -.3344 | -.3619 |

ALPHA ( 2) = -.025 BETA ( 1) = -3.907 MACH = .89827 Q = 599.10 P = 1060.7 RN/L = 3.5698

SECTION ( 1)BODY FLAP UPPER DEPENDENT VARIABLE CP

| X/LB | 1.0180 | 1.0460 |
|---|---|---|
| PHI | | |
| .000 | -.3146 | -.3048 |
| 40.000 | -.3105 | -.3478 |

AMES 11-073(OA148) -140A/B/C/R ORB BODY FLAP UP (XE8F04)

ALPHA ( 2) = -.020 BETA ( 2) = .144 MACH = .89827 Q = 599.10 P = 1060.7 RN/L = 3.5698

SECTION ( 1)BODY FLAP UPPER DEPENDENT VARIABLE CP

| X/LB | 1.0180 | 1.0460 |
|---|---|---|
| PHI | | |
| .000 | -.2879 | -.2951 |
| 40.000 | -.3096 | -.3335 |

ALPHA ( 2) = -.027 BETA ( 3) = 4.215 MACH = .89827 Q = 599.10 P = 1060.7 RN/L = 3.5698

SECTION ( 1)BODY FLAP UPPER DEPENDENT VARIABLE CP

| X/LB | 1.0180 | 1.0460 |
|---|---|---|
| PHI | | |
| .000 | -.3019 | -.3139 |
| 40.000 | -.3218 | -.3527 |

ALPHA ( 3) = 3.898 BETA ( 1) = -3.912 MACH = .89833 Q = 598.89 P = 1060.2 RN/L = 3.5704

SECTION ( 1)BODY FLAP UPPER DEPENDENT VARIABLE CP

| X/LB | 1.0180 | 1.0460 |
|---|---|---|
| PHI | | |
| .000 | -.2985 | -.2959 |
| 40.000 | -.3198 | -.3384 |

ALPHA ( 3) = 3.896 BETA ( 2) = .152 MACH = .89833 Q = 598.89 P = 1060.2 RN/L = 3.5704

SECTION ( 1)BODY FLAP UPPER DEPENDENT VARIABLE CP

| X/LB | 1.0180 | 1.0460 |
|---|---|---|
| PHI | | |
| .000 | -.2931 | -.2866 |
| 40.000 | -.3007 | -.3180 |

ALPHA ( 3) = 3.899 BETA ( 3) = 4.208 MACH = .89833 Q = 598.89 P = 1060.2 RN/L = 3.5704

SECTION ( 1)BODY FLAP UPPER DEPENDENT VARIABLE CP

| X/LB | 1.0180 | 1.0460 |
|---|---|---|
| PHI | | |
| .000 | -.2955 | -.3123 |
| 40.000 | -.3001 | -.3137 |

AMES 11-073(OA148) -140A/B/C/R ORB BODY FLAP UP (XE8F04)

ALPHA ( 4) = 7.895 BETA ( 1) = -3.903 MACH = .89900 Q = 599.51 P = 1059.7 RN/L = 3.5708

SECTION ( 1)BODY FLAP UPPER DEPENDENT VARIABLE CP

| X/LB | 1.0180 | 1.0460 |
|---|---|---|
| PHI | | |
| .000 | -.2829 | -.2946 |
| 40.000 | -.3051 | -.3182 |

ALPHA ( 4) = 7.900 BETA ( 2) = .140 MACH = .89900 Q = 599.51 P = 1059.7 RN/L = 3.5708

SECTION ( 1)BODY FLAP UPPER DEPENDENT VARIABLE CP

| X/LB | 1.0180 | 1.0460 |
|---|---|---|
| PHI | | |
| .000 | -.2856 | -.2933 |
| 40.000 | -.2847 | -.3000 |

ALPHA ( 4) = 7.897 BETA ( 3) = 4.209 MACH = .89900 Q = 599.51 P = 1059.7 RN/L = 3.5708

SECTION ( 1)BODY FLAP UPPER DEPENDENT VARIABLE CP

| X/LB | 1.0180 | 1.0460 |
|---|---|---|
| PHI | | |
| .000 | -.2978 | -.3033 |
| 40.000 | -.2757 | -.2870 |

ALPHA ( 5) = 11.985 BETA ( 1) = -3.890 MACH = .89830 Q = 599.10 P = 1060.7 RN/L = 3.5735

SECTION ( 1)BODY FLAP UPPER DEPENDENT VARIABLE CP

| X/LB | 1.0180 | 1.0460 |
|---|---|---|
| PHI | | |
| .000 | -.2992 | -.3133 |
| 40.000 | -.2989 | -.3135 |

ALPHA ( 5) = 11.993 BETA ( 2) = .152 MACH = .89830 Q = 599.10 P = 1060.7 RN/L = 3.5735

SECTION ( 1)BODY FLAP UPPER DEPENDENT VARIABLE CP

| X/LB | 1.0180 | 1.0460 |
|---|---|---|
| PHI | | |
| .000 | -.2884 | -.3003 |
| 40.000 | -.2879 | -.3061 |

ORIGINAL PAGE IS OF POOR QUALITY

AMES 11-073(OA148) -140A/B/C/R ORB BODY FLAP UP (XEBFD4)

ALPHA ( 5) = 11.982 BETA ( 3) = 4.122 MACH = .89830 Q = 599.10 P = 1060.7 RN/L = 3.5735

SECTION ( 1)BODY FLAP UPPER DEPENDENT VARIABLE CP

| X/LB | 1.0180 | 1.0460 |
|---|---|---|
| PHI | | |
| .000 | -.3020 | -.3061 |
| 40.000 | -.3113 | -.3272 |

AMES 11-073(OA148) -140A/B/C/R ORB BODY FLAP UP (XE8F05) ( 05 AUG 75 )

REFERENCE DATA

SREF = 2690.0000 SQ.FT. XMRP = 1076.6800 IN. XO
LREF = 474.8000 IN. YMRP = .0000 IN. YO
BREF = 936.0680 IN. ZMRP = 375.0000 IN. ZO
SCALE = .0300

PARAMETRIC DATA

RUDDER = .000 SPDBRK = 55.000
BDFLAP = 16.300 L-ELVN = .000
R-ELVN = .000 MACH = .600

ALPHA ( 1) = -3.995 BETA ( 1) = -7.893 MACH = .59580 Q = 593.15 P = 2387.2 RN/L = 4.8118

SECTION ( 1)BODY FLAP UPPER DEPENDENT VARIABLE CP

| X/LB | 1.0180 | 1.0460 |
|---|---|---|
| PHI | | |
| .000 | -.2415 | -.2376 |
| 40.000 | -.2814 | -.3192 |

ALPHA ( 1) = -3.981 BETA ( 2) = -3.877 MACH = .59580 Q = 593.15 P = 2387.2 RN/L = 4.8118

SECTION ( 1)BODY FLAP UPPER DEPENDENT VARIABLE CP

| X/LB | 1.0180 | 1.0460 |
|---|---|---|
| PHI | | |
| .000 | -.2484 | -.2395 |
| 40.000 | -.2760 | -.3076 |

ALPHA ( 1) = -3.973 BETA ( 3) = .156 MACH = .59580 Q = 593.15 P = 2387.2 RN/L = 4.8118

SECTION ( 1)BODY FLAP UPPER DEPENDENT VARIABLE CP

| X/LB | 1.0180 | 1.0460 |
|---|---|---|
| PHI | | |
| .000 | -.2395 | -.2424 |
| 40.000 | -.2761 | -.3164 |

ALPHA ( 1) = -3.981 BETA ( 4) = 4.231 MACH = .59580 Q = 593.15 P = 2387.2 RN/L = 4.8118

SECTION ( 1)BODY FLAP UPPER DEPENDENT VARIABLE CP

| X/LB | 1.0180 | 1.0460 |
|---|---|---|
| PHI | | |
| .000 | -.2449 | -.2369 |
| 40.000 | -.2806 | -.3154 |

AMES 11-073(OA148) -140A/B/C/R ORB BODY FLAP UP (XE8F05)

ALPHA ( 1) = -3.995 BETA ( 5) = 8.308 MACH = .59580 Q = 593.15 P = 2387.2 RN/L = 4.8118

SECTION ( 1)BODY FLAP UPPER DEPENDENT VARIABLE CP

| X/LB | 1.0180 | 1.0460 |
|---|---|---|
| PHI | | |
| .000 | -.2443 | -.2578 |
| 40.000 | -.2741 | -.3139 |

ALPHA ( 2) = -.001 BETA ( 1) = -7.930 MACH = .59552 Q = 592.56 P = 2387.2 RN/L = 4.8092

SECTION ( 1)BODY FLAP UPPER DEPENDENT VARIABLE CP

| X/LB | 1.0180 | 1.0460 |
|---|---|---|
| PHI | | |
| .000 | -.2497 | -.2458 |
| 40.000 | -.2827 | -.3119 |

ALPHA ( 2) = .008 BETA ( 2) = -3.696 MACH = .59552 Q = 592.56 P = 2387.2 RN/L = 4.8092

SECTION ( 1)BODY FLAP UPPER DEPENDENT VARIABLE CP

| X/LB | 1.0180 | 1.0460 |
|---|---|---|
| PHI | | |
| .000 | -.2455 | -.2431 |
| 40.000 | -.2759 | -.3095 |

ALPHA ( 2) = .009 BETA ( 3) = .144 MACH = .59552 Q = 592.56 P = 2387.2 RN/L = 4.8092

SECTION ( 1)BODY FLAP UPPER DEPENDENT VARIABLE CP

| X/LB | 1.0180 | 1.0460 |
|---|---|---|
| PHI | | |
| .000 | -.2402 | -.2412 |
| 40.000 | -.2691 | -.3134 |

ALPHA ( 2) = .008 BETA ( 4) = 4.214 MACH = .59552 Q = 592.56 P = 2387.2 RN/L = 4.8092

SECTION ( 1)BODY FLAP UPPER DEPENDENT VARIABLE CP

| X/LB | 1.0180 | 1.0460 |
|---|---|---|
| PHI | | |
| .000 | -.2393 | -.2489 |
| 40.000 | -.2778 | -.3055 |

ORIGINAL PAGE IS
OF POOR QUALITY



AMES 11-073(OA148) -140A/B/C/R ORB BODY FLAP UP (XEBF05)

ALPHA ( 3) = .003 BETA ( 5) = 8.269 MACH = .59552 Q = 592.56 P = 2387.2 RN/L = 4.8092

SECTION ( 1)BODY FLAP UPPER DEPENDENT VARIABLE CP

| X/LB | 1.0180 | 1.0460 |
|---|---|---|
| PHI | | |
| .000 | -.2566 | -.2573 |
| 40.000 | -.2803 | -.3097 |

ALPHA ( 3) = 3.907 BETA ( 1) = -7.936 MACH = .59500 Q = 591.74 P = 2387.9 RN/L = 4.8063

SECTION ( 1)BODY FLAP UPPER DEPENDENT VARIABLE CP

| X/LB | 1.0180 | 1.0460 |
|---|---|---|
| PHI | | |
| .000 | -.2526 | -.2653 |
| 40.000 | -.2905 | -.3123 |

ALPHA ( 3) = 3.912 BETA ( 2) = -3.897 MACH = .59500 Q = 591.74 P = 2387.9 RN/L = 4.8063

SECTION ( 1)BODY FLAP UPPER DEPENDENT VARIABLE CP

| X/LB | 1.0180 | 1.0460 |
|---|---|---|
| PHI | | |
| .000 | -.2450 | -.2474 |
| 40.000 | -.2782 | -.3067 |

ALPHA ( 3) = 3.909 BETA ( 3) = .143 MACH = .59500 Q = 591.74 P = 2387.9 RN/L = 4.8063

SECTION ( 1)BODY FLAP UPPER DEPENDENT VARIABLE CP

| X/LB | 1.0180 | 1.0460 |
|---|---|---|
| PHI | | |
| .000 | -.2529 | -.2478 |
| 40.000 | -.2628 | -.2911 |

ALPHA ( 3) = 3.918 BETA ( 4) = 4.207 MACH = .59500 Q = 591.74 P = 2387.9 RN/L = 4.8063

SECTION ( 1)BODY FLAP UPPER DEPENDENT VARIABLE CP

| X/LB | 1.0180 | 1.0460 |
|---|---|---|
| PHI | | |
| .000 | -.2593 | -.2661 |
| 40.000 | -.2693 | -.3059 |

AMES 11-073(OA148) -140A/B/C/R ORB BODY FLAP UP (XEBFC5)

ALPHA ( 3) = 3.922 BETA ( 5) = 8.252 MACH = .59500 Q = 591.74 P = 2387.9 RN/L = 4.8053

SECTION ( 1)BODY FLAP UPPER DEPENDENT VARIABLE CP

| X/LB | 1.0180 | 1.0460 |
|---|---|---|
| PHI | | |
| .000 | -.2684 | -.2848 |
| 40.000 | -.2527 | -.2778 |

ALPHA ( 4) = 7.956 BETA ( 1) = -7.918 MACH = .59428 Q = 590.57 P = 2388.9 RN/L = 4.8012

SECTION ( 1)BODY FLAP UPPER DEPENDENT VARIABLE CP

| X/LB | 1.0180 | 1.0460 |
|---|---|---|
| PHI | | |
| .000 | -.2594 | -.2693 |
| 40.000 | -.2940 | -.3128 |

ALPHA ( 4) = 7.965 BETA ( 2) = -3.894 MACH = .59428 Q = 590.57 P = 2388.9 RN/L = 4.8012

SECTION ( 1)BODY FLAP UPPER DEPENDENT VARIABLE CP

| X/LB | 1.0180 | 1.0460 |
|---|---|---|
| PHI | | |
| .000 | -.2502 | -.2560 |
| 40.000 | -.2817 | -.3025 |

ALPHA ( 4) = 7.970 BETA ( 3) = .145 MACH = .59428 Q = 590.57 P = 2388.9 RN/L = 4.8012

SECTION ( 1)BODY FLAP UPPER DEPENDENT VARIABLE CP

| X/LB | 1.0180 | 1.0460 |
|---|---|---|
| PHI | | |
| .000 | -.2425 | -.2571 |
| 40.000 | -.2636 | -.2757 |

ALPHA ( 4) = 7.969 BETA ( 4) = 4.201 MACH = .59428 Q = 590.57 P = 2388.9 RN/L = 4.8012

SECTION ( 1)BODY FLAP UPPER DEPENDENT VARIABLE CP

| X/LB | 1.0180 | 1.0460 |
|---|---|---|
| PHI | | |
| .000 | -.2641 | -.2687 |
| 40.000 | -.2556 | -.2829 |

AMES 11-073(OA148) -140A/B/C/R ORB BODY FLAP UP (XEBF05)

ALPHA ( 4) = 7.967 BETA ( 5) = 8.254 MACH = .59428 Q = 590.57 P = 2388.9 RN/L = 4.8012

SECTION ( 1)BODY FLAP UPPER DEPENDENT VARIABLE CP

| X/LB | 1.0180 | 1.0460 |
|---|---|---|
| PHI | | |
| .000 | -.2959 | -.2947 |
| 40.000 | -.2563 | -.2871 |

ALPHA ( 5) = 12.022 BETA ( 1) = -7.881 MACH = .59502 Q = 591.86 P = 2388.2 RN/L = 4.8047

SECTION ( 1)BODY FLAP UPPER DEPENDENT VARIABLE CP

| X/LB | 1.0180 | 1.0460 |
|---|---|---|
| PHI | | |
| .000 | -.2530 | -.2665 |
| 40.000 | -.2988 | -.3107 |

ALPHA ( 5) = 12.020 BETA ( 2) = -3.874 MACH = .59502 Q = 591.86 P = 2388.2 RN/L = 4.8047

SECTION ( 1)BODY FLAP UPPER DEPENDENT VARIABLE CP

| X/LB | 1.0180 | 1.0460 |
|---|---|---|
| PHI | | |
| .000 | -.2484 | -.2503 |
| 40.000 | -.2645 | -.2917 |

ALPHA ( 5) = 12.022 BETA ( 3) = .150 MACH = .59502 Q = 591.86 P = 2388.2 RN/L = 4.8047

SECTION ( 1)BODY FLAP UPPER DEPENDENT VARIABLE CP

| X/LB | 1.0180 | 1.0460 |
|---|---|---|
| PHI | | |
| .000 | -.2452 | -.2508 |
| 40.000 | -.2455 | -.2715 |

ALPHA ( 5) = 12.023 BETA ( 4) = 4.211 MACH = .59502 Q = 591.86 P = 2388.2 RN/L = 4.8047

SECTION ( 1)BODY FLAP UPPER DEPENDENT VARIABLE CP

| X/LB | 1.0180 | 1.0460 |
|---|---|---|
| PHI | | |
| .000 | -.2515 | -.2737 |
| 40.000 | -.2543 | -.2826 |

AMES 11-073(OA148) -140A/B/C/R ORB BODY FLAP UP (XE8F05)

ALPHA ( 5) = 12.020 BETA ( 5) = 8.278 MACH = .59502 Q = 591.85 P = 2388.2 RN/L = 4.8047

SECTION ( 1)BODY FLAP UPPER DEPENDENT VARIABLE CP

| X/LB | 1.0180 | 1.0460 |
|---|---|---|
| PHI | | |
| .000 | -.2731 | -.2845 |
| 40.000 | -.2497 | -.2864 |

AMES 11-073(OA148) -140A/B/C/R ORB BODY FLAP UP (XE8F06) ( 05 AUG 75 )

REFERENCE DATA

SREF = 2690.0000 SQ.FT. XMRP = 1076.6800 IN. XO
LREF = 474.8000 IN. YMRP = .0000 IN. YO
BREF = 936.0690 IN. ZMRP = 375.0000 IN. ZO
SCALE = .0300

PARAMETRIC DATA

RUDDER = .000 SPDBRK = 55.000
BDFLAP = 22.500 L-ELVN = .000
R-ELVN = .000 MACH = .600

ALPHA ( 1) = -4.026 BETA ( 1) = -7.883 MACH = .59594 Q = 593.39 P = 2387.0 RN/L = 4.8396

SECTION ( 1)BODY FLAP UPPER DEPENDENT VARIABLE CP

| X/LB | 1.0180 | 1.0460 |
|---|---|---|
| PHI | | |
| .000 | -.2876 | -.2686 |
| 40.000 | -.3052 | -.3324 |

ALPHA ( 1) = -4.010 BETA ( 2) = -3.877 MACH = .59594 Q = 593.39 P = 2387.0 RN/L = 4.8396

SECTION ( 1)BODY FLAP UPPER DEPENDENT VARIABLE CP

| X/LB | 1.0180 | 1.0460 |
|---|---|---|
| PHI | | |
| .000 | -.2754 | -.2638 |
| 40.000 | -.2953 | -.3204 |

ALPHA ( 1) = -3.994 BETA ( 3) = .154 MACH = .59594 Q = 593.39 P = 2387.0 RN/L = 4.8396

SECTION ( 1)BODY FLAP UPPER DEPENDENT VARIABLE CP

| X/LB | 1.0180 | 1.0460 |
|---|---|---|
| PHI | | |
| .000 | -.2753 | -.2695 |
| 40.000 | -.3002 | -.3329 |

ALPHA ( 1) = -4.001 BETA ( 4) = 4.235 MACH = .59594 Q = 593.39 P = 2387.0 RN/L = 4.8396

SECTION ( 1)BODY FLAP UPPER DEPENDENT VARIABLE CP

| X/LB | 1.0180 | 1.0460 |
|---|---|---|
| PHI | | |
| .000 | -.2744 | -.2621 |
| 40.000 | -.3083 | -.3275 |

AMES 11-073(OA148) -140A/B/C/R ORB BODY FLAP UP (XE8F06)

ALPHA ( 1) = -4.013 BETA ( 5) = 8.308 MACH = .59594 Q = 593.39 P = 2387.0 RN/L = 4.8396

SECTION ( 1)BODY FLAP UPPER DEPENDENT VARIABLE CP

| X/LB | 1.0180 | 1.0460 |
|---|---|---|
| PHI | | |
| .000 | -.2795 | -.2824 |
| 40.000 | -.3000 | -.3127 |

ALPHA ( 2) = .023 BETA ( 1) = -7.929 MACH = .59630 Q = 593.84 P = 2385.7 RN/L = 4.8179

SECTION ( 1)BODY FLAP UPPER DEPENDENT VARIABLE CP

| X/LB | 1.0180 | 1.0460 |
|---|---|---|
| PHI | | |
| .000 | -.2824 | -.2742 |
| 40.000 | -.2999 | -.3309 |

ALPHA ( 2) = .033 BETA ( 2) = -3.896 MACH = .59630 Q = 593.84 P = 2385.7 RN/L = 4.8179

SECTION ( 1)BODY FLAP UPPER DEPENDENT VARIABLE CP

| X/LB | 1.0180 | 1.0460 |
|---|---|---|
| PHI | | |
| .000 | -.2787 | -.2743 |
| 40.000 | -.2958 | -.3244 |

ALPHA ( 2) = .035 BETA ( 3) = .147 MACH = .59630 Q = 593.84 P = 2385.7 RN/L = 4.8179

SECTION ( 1)BODY FLAP UPPER DEPENDENT VARIABLE CP

| X/LB | 1.0180 | 1.0460 |
|---|---|---|
| PHI | | |
| .000 | -.2727 | -.2612 |
| 40.000 | -.2881 | -.3205 |

ALPHA ( 2) = .050 BETA ( 4) = 4.214 MACH = .59630 Q = 593.84 P = 2385.7 RN/L = 4.8179

SECTION ( 1)BODY FLAP UPPER DEPENDENT VARIABLE CP

| X/LB | 1.0180 | 1.0460 |
|---|---|---|
| PHI | | |
| .000 | -.2737 | -.2713 |
| 40.000 | -.3075 | -.3301 |

AMES 11-073(OA148) -140A/B/C/R ORB BODY FLAP UP (XE8F06)

ALPHA ( 2) = .045 BETA ( 5) = 8.269 MACH = .59630 Q = 593.84 P = 2385.7 RN/L = 4.8179

SECTION ( 1)BODY FLAP UPPER DEPENDENT VARIABLE CP

| X/LB | 1.0180 | 1.0460 |
|---|---|---|
| PHI | | |
| .000 | -.2930 | -.2853 |
| 40.000 | -.3089 | -.3303 |

ALPHA ( 3) = 3.911 BETA ( 1) = -7.932 MACH = .59594 Q = 593.13 P = 2385.8 RN/L = 4.8146

SECTION ( 1)BODY FLAP UPPER DEPENDENT VARIABLE CP

| X/LB | 1.0180 | 1.0460 |
|---|---|---|
| PHI | | |
| .000 | -.2862 | -.2828 |
| 40.000 | -.3040 | -.3280 |

ALPHA ( 3) = 3.915 BETA ( 2) = -3.897 MACH = .59594 Q = 593.13 P = 2385.8 RN/L = 4.8146

SECTION ( 1)BODY FLAP UPPER DEPENDENT VARIABLE CP

| X/LB | 1.0180 | 1.0460 |
|---|---|---|
| PHI | | |
| .000 | -.2799 | -.2755 |
| 40.000 | -.2967 | -.3196 |

ALPHA ( 3) = 3.912 BETA ( 3) = .150 MACH = .59594 Q = 593.13 P = 2385.8 RN/L = 4.8146

SECTION ( 1)BODY FLAP UPPER DEPENDENT VARIABLE CP

| X/LB | 1.0180 | 1.0460 |
|---|---|---|
| PHI | | |
| .000 | -.2782 | -.2756 |
| 40.000 | -.2886 | -.3057 |

ALPHA ( 3) = 3.921 BETA ( 4) = 4.204 MACH = .59594 Q = 593.13 P = 2385.8 RN/L = 4.8146

SECTION ( 1)BODY FLAP UPPER DEPENDENT VARIABLE CP

| X/LB | 1.0180 | 1.0460 |
|---|---|---|
| PHI | | |
| .000 | -.2931 | -.2841 |
| 40.000 | -.2947 | -.3308 |

AMES 11-073(OA146) -140A/B/C/R ORB BODY FLAP UP (XE8F06)

ALPHA ( 3) = 3.925 BETA ( 5) = 8.248 MACH = .59594 Q = 593.13 P = 2385.8 RN/L = 4.8146

SECTION ( 1)BODY FLAP UPPER DEPENDENT VARIABLE CP

| X/LB | 1.0180 | 1.0460 |
|---|---|---|
| PHI | | |
| .000 | -.3052 | -.3093 |
| 40.000 | -.2780 | -.2947 |

ALPHA ( 4) = 7.957 BETA ( 1) = -7.908 MACH = .59612 Q = 593.49 P = 2385.7 RN/L = 4.8178

SECTION ( 1)BODY FLAP UPPER DEPENDENT VARIABLE CP

| X/LB | 1.0180 | 1.0460 |
|---|---|---|
| PHI | | |
| .000 | -.2917 | -.2818 |
| 40.000 | -.3037 | -.3292 |

ALPHA ( 4) = 7.966 BETA ( 2) = -3.891 MACH = .59612 Q = 593.49 P = 2385.7 RN/L = 4.8178

SECTION ( 1)BODY FLAP UPPER DEPENDENT VARIABLE CP

| X/LB | 1.0180 | 1.0460 |
|---|---|---|
| PHI | | |
| .000 | -.2750 | -.2709 |
| 40.000 | -.2877 | -.3136 |

ALPHA ( 4) = 7.972 BETA ( 3) = .143 MACH = .59612 Q = 593.49 P = 2385.7 RN/L = 4.8178

SECTION ( 1)BODY FLAP UPPER DEPENDENT VARIABLE CP

| X/LB | 1.0180 | 1.0460 |
|---|---|---|
| PHI | | |
| .000 | -.2705 | -.2753 |
| 40.000 | -.2751 | -.2955 |

ALPHA ( 4) = 7.971 BETA ( 4) = 4.201 MACH = .59612 Q = 593.49 P = 2385.7 RN/L = 4.8178

SECTION ( 1)BODY FLAP UPPER DEPENDENT VARIABLE CP

| X/LB | 1.0180 | 1.0460 |
|---|---|---|
| PHI | | |
| .000 | -.2905 | -.2876 |
| 40.000 | -.2726 | -.3072 |

AMES 11-073(OA148) -140A/B/C/R ORB BODY FLAP UP (XE8F05)

ALPHA ( 4) = 7.969 BETA ( 5) = 8 255 MACH = .59612 Q = 593.49 P = 2365.7 RN/L = 4.8178

SECTION ( 1)BODY FLAP UPPER DEPENDENT VARIABLE CP

| X/LB | 1.0180 | 1.0460 |
|---|---|---|
| PHI | | |
| .000 | -.3177 | -.3216 |
| 40.000 | -.2733 | -.2996 |

ALPHA ( 5) = 12.008 BETA ( 1) = -7.872 MACH = .47710 Q = 475.06 P = 1908.1 RN/L = 3.8563

SECTION ( 1)BODY FLAP UPPER DEPENDENT VARIABLE CP

| X/LB | 1.0180 | 1.0460 |
|---|---|---|
| PHI | | |
| .000 | -.2845 | -.2852 |
| 40.000 | -.2982 | -.3165 |

ALPHA ( 5) = 12.030 BETA ( 2) = -3.872 MACH = .47710 Q = 475.06 P = 1908.1 RN/L = 3.8563

SECTION ( 1)BODY FLAP UPPER DEPENDENT VARIABLE CP

| X/LB | 1.0180 | 1.0460 |
|---|---|---|
| PHI | | |
| .000 | -.2689 | -.2725 |
| 40.000 | -.2720 | -.2989 |

ALPHA ( 5) = 12.036 BETA ( 3) = .140 MACH = .47710 Q = 475.06 P = 1908.1 RN/L = 3.8563

SECTION ( 1)BODY FLAP UPPER DEPENDENT VARIABLE CP

| X/LB | 1.0180 | 1.0460 |
|---|---|---|
| PHI | | |
| .000 | -.2792 | -.2797 |
| 40.000 | -.2665 | -.2905 |

ALPHA ( 5) = 11.949 BETA ( 4) = 4.211 MACH = .47710 Q = 475.06 P = 1908.1 RN/L = 3.8563

SECTION ( 1)BODY FLAP UPPER DEPENDENT VARIABLE CP

| X/LB | 1.0180 | 1.0460 |
|---|---|---|
| PHI | | |
| .000 | -.2905 | -.2958 |
| 40.000 | -.2655 | -.2824 |

AMES 11-073(OA148) -140A/B/C/R ORB BODY FLAP UP (XE8F06)

ALPHA ( 5) = 12.026 BETA ( 5) = 8.275 MACH = .47710 Q = 475.06 P = 1908.1 RN/L = 3.2563

SECTION ( 1)BODY FLAP UPPER DEPENDENT VARIABLE CP

| X/LB | 1.0180 | 1.0460 |
|---|---|---|
| PHI | | |
| .000 | -.3077 | -.3077 |
| 40.000 | -.2670 | -.3010 |

DATE 13 FEB 76 TABULATED PRESSURE DATA - OA148 ( AMES 11-073-1 )

AMES 11-073(OA148) -140A/B/C/R ORB BODY FLAP UP (XE8F07) ( 13 AUG 75 )

REFERENCE DATA

SREF = 2690.0000 SQ.FT. XMRP = 1076.6800 IN. XO
LREF = 474.8000 IN. YMRP = .0000 IN. YO
BREF = 936.0680 IN. ZMRP = 575.0000 IN. ZO
SCALE = .0300

PARAMETRIC DATA

RUDDER = .000 SPDBRK = 55.000
BDFLAP = 22.500 L-ELVN = .000
R-ELVN = .000 MACH = .900

ALPHA ( 1) = -4.058 BETA ( 1) = -3.876 MACH = .89933 Q = 599.81 P = 1059.5 RN/L = 3.5834

SECTION ( 1)BODY FLAP UPPER DEPENDENT VARIABLE CP

| X/LB | 1.0180 | 1.0460 |
|---|---|---|
| PHI | | |
| .000 | -.3429 | -.3467 |
| 40.000 | -.3474 | -.3710 |

ALPHA ( 1) = -4.048 BETA ( 2) = .153 MACH = .89933 Q = 599.81 P = 1059.5 RN/L = 3.5834

SECTION ( 1)BODY FLAP UPPER DEPENDENT VARIABLE CP

| X/LB | 1.0180 | 1.0460 |
|---|---|---|
| PHI | | |
| .000 | -.3414 | -.3380 |
| 40.000 | -.3475 | -.3900 |

ALPHA ( 1) = -4.057 BETA ( 3) = 4.237 MACH = .89933 Q = 599.81 P = 1059.5 RN/L = 3.5834

SECTION ( 1)BODY FLAP UPPER DEPENDENT VARIABLE CP

| X/LB | 1.0180 | 1.0460 |
|---|---|---|
| PHI | | |
| .000 | -.3344 | -.3344 |
| 40.000 | -.3599 | -.3864 |

ALPHA ( 2) = .010 BETA ( 1) = -3.903 MACH = .90060 Q = 601.03 P = 1058.5 RN/L = 3.5880

SECTION ( 1)BODY FLAP UPPER DEPENDENT VARIABLE CP

| X/LB | 1.0180 | 1.0460 |
|---|---|---|
| PHI | | |
| .000 | -.3503 | -.3487 |
| 40.000 | -.3456 | -.3582 |

AMES 11-073(OA148) -140A/B/C/R ORB BODY FLAP UP (XEBF07)

ALPHA ( 2) = .014 BETA ( 2) = .148 MACH = .90060 Q = 601.03 P = 1058.5 RN/L = 3.5880

SECTION ( 1)BODY FLAP UPPER DEPENDENT VARIABLE CP

| X/LB | 1.0180 | 1.0460 |
|---|---|---|
| PHI | | |
| .000 | -.3176 | -.3299 |
| 40.000 | -.3230 | -.3506 |

ALPHA ( 2) = .013 BETA ( 3) = 4.211 MACH = .90060 Q = 601.03 P = 1058.5 RN/L = 3.5880

SECTION ( 1)BODY FLAP UPPER DEPENDENT VARIABLE CP

| X/LB | 1.0180 | 1.0460 |
|---|---|---|
| PHI | | |
| .000 | -.3359 | -.3358 |
| 40.000 | -.3495 | -.3755 |

ALPHA ( 3) = 3.998 BETA ( 1) = -3.905 MACH = .90070 Q = 600.82 P = 1058.0 RN/L = 3.5882

SECTION ( 1)BODY FLAP UPPER DEPENDENT VARIABLE CP

| X/LB | 1.0180 | 1.0460 |
|---|---|---|
| PHI | | |
| .000 | -.3264 | -.3386 |
| 40.000 | -.3217 | -.3445 |

ALPHA ( 3) = 4.002 BETA ( 2) = .135 MACH = .90070 Q = 600.82 P = 1058.0 RN/L = 3.5882

SECTION ( 1)BODY FLAP UPPER DEPENDENT VARIABLE CP

| X/LB | 1.0180 | 1.0460 |
|---|---|---|
| PHI | | |
| .000 | -.3254 | -.3201 |
| 40.000 | -.3263 | -.3328 |

ALPHA ( 3) = 3.920 BETA ( 3) = 4.206 MACH = .90070 Q = 600.82 P = 1058.0 RN/L = 3.5882

SECTION ( 1)BODY FLAP UPPER DEPENDENT VARIABLE CP

| X/LB | 1.0180 | 1.0460 |
|---|---|---|
| PHI | | |
| .000 | -.3327 | -.3455 |
| 40.000 | -.3253 | -.3575 |

AMES 11-073(OA148) -140A/B/C/R ORB BODY FLAP UP (XE8F07)

ALPHA ( 4) = 7.946 BETA ( 1) = -3.900 MACH = .89867 Q = 599.20 P = 1059.9 RN/L = 3.5837

SECTION ( 1)BODY FLAP UPPER DEPENDENT VARIABLE CP

| X/LB | 1.0180 | 1.0460 |
|---|---|---|
| PHI | | |
| .000 | -.3320 | -.3299 |
| 40.000 | -.3299 | -.3377 |

ALPHA ( 4) = 7.956 BETA ( 2) = .143 MACH = .89867 Q = 599.20 P = 1059.9 RN/L = 3.5837

SECTION ( 1)BODY FLAP UPPER DEPENDENT VARIABLE CP

| X/LB | 1.0180 | 1.0460 |
|---|---|---|
| PHI | | |
| .000 | -.3258 | -.3274 |
| 40.000 | -.3219 | -.3437 |

ALPHA ( 4) = 7.955 BETA ( 3) = 4.206 MACH = .89867 Q = 599.20 P = 1059.9 RN/L = 3.5837

SECTION ( 1)BODY FLAP UPPER DEPENDENT VARIABLE CP

| X/LB | 1.0180 | 1.0460 |
|---|---|---|
| PHI | | |
| .000 | -.3413 | -.3511 |
| 40.000 | -.3300 | -.3518 |

ALPHA ( 5) = 11.987 BETA ( 1) = -3.885 MACH = .89947 Q = 599.98 P = 1059.5 RN/L = 3.5879

SECTION ( 1)BODY FLAP UPPER DEPENDENT VARIABLE CP

| X/LB | 1.0180 | 1.0460 |
|---|---|---|
| PHI | | |
| .000 | -.3550 | -.3507 |
| 40.000 | -.3298 | -.3352 |

ALPHA ( 5) = 11.997 BETA ( 2) = .148 MACH = .89947 Q = 599.98 P = 1059.5 RN/L = 3.5879

SECTION ( 1)BODY FLAP UPPER DEPENDENT VARIABLE CP

| X/LB | 1.0180 | 1.0460 |
|---|---|---|
| PHI | | |
| .000 | -.3408 | -.3375 |
| 40.000 | -.3129 | -.3329 |

ORIGINAL PAGE IS OF POOR QUALITY

AMES 11-073(OA148) -140A/B/C/R ORB BODY FLAP UP (XE8F07)

ALPHA ( 5) = 11.987 BETA ( 3) = 4.223 MACH = .89947 Q = 599.98 P = 1059.5 RN/L = 3.5879

SECTION ( 1)BODY FLAP UPPER DEPENDENT VARIABLE CP

| X/LB | 1.0180 | 1.0460 |
|---|---|---|
| PHI | | |
| .000 | -.3279 | -.3439 |
| 40.000 | -.3486 | -.3644 |

AMES 11-073(OA148) -140A/B/C/R ORB BODY FLAP UP (XEBFCB) : 05 AUG 75 :

REFERENCE DATA

SREF = 2690.0000 SQ.FT. XMRP = 1076.6800 IN. XO
LREF = 474.9000 IN. YMRP = .0000 IN. YO
BREF = 936.0680 IN. ZMRP = 375.0000 IN. ZO
SCALE = .0300

PARAMETRIC DATA

RUDDER = .000 SPDBRK = 85.000
BDFLAP = 22.500 L-ELVN = .000
R-ELVN = .000 MACH = 1.400

ALPHA ( 1) = -4.017 BETA ( 1) = -3.884 MACH = 1.3953 Q = 598.61 P = 439.24 RN/L = 2.9166

SECTION ( 1)BODY FLAP UPPER DEPENDENT VARIABLE CP

| X/LB | 1.0180 | 1.0460 |
|---|---|---|
| PHI | | |
| .000 | -.3298 | -.3135 |
| 40.000 | -.3610 | -.3711 |

ALPHA ( 1) = -3.966 BETA ( 2) = .155 MACH = 1.3953 Q = 598.61 P = 439.24 RN/L = 2.9166

SECTION ( 1)BODY FLAP UPPER DEPENDENT VARIABLE CP

| X/LB | 1.0180 | 1.0460 |
|---|---|---|
| PHI | | |
| .000 | -.3287 | -.3146 |
| 40.000 | -.3669 | -.3783 |

ALPHA ( 1) = -4.012 BETA ( 3) = 4.241 MACH = 1.3953 Q = 598.61 P = 439.24 RN/L = 2.9166

SECTION ( 1)BODY FLAP UPPER DEPENDENT VARIABLE CP

| X/LB | 1.0180 | 1.0460 |
|---|---|---|
| PHI | | |
| .000 | -.3335 | -.3213 |
| 40.000 | -.3595 | -.3746 |

ALPHA ( 2) = -.007 BETA ( 1) = -3.899 MACH = 1.3951 Q = 598.93 P = 439.00 RN/L = 2.9179

SECTION ( 1)BODY FLAP UPPER DEPENDENT VARIABLE CP

| X/LB | 1.0180 | 1.0460 |
|---|---|---|
| PHI | | |
| .000 | -.3319 | -.3257 |
| 40.000 | -.3613 | -.3711 |

AMES 11-073(OA148) -140A/B/C/R ORB BODY FLAP UP (XEBFDB)

ALPHA ( 2) = -.001 BETA ( 2) = .155 MACH = 1.3961 Q = 598.93 P = 439.00 RN/L = 2.9179

SECTION ( 1)BODY FLAP UPPER DEPENDENT VARIABLE CP

| X/LB | 1.0180 | 1.0460 |
|---|---|---|
| PHI | | |
| .000 | -.3415 | -.3446 |
| 40.000 | -.3587 | -.3747 |

ALPHA ( 2) = -.006 BETA ( 3) = 4.218 MACH = 1.3961 Q = 598.93 P = 439.00 RN/L = 2.9179

SECTION ( 1)BODY FLAP UPPER DEPENDENT VARIABLE CP

| X/LB | 1.0180 | 1.0460 |
|---|---|---|
| PHI | | |
| .000 | -.3454 | -.3490 |
| 40.000 | -.3552 | -.3733 |

ALPHA ( 3) = 3.849 BETA ( 1) = -3.909 MACH = 1.3959 Q = 599.13 P = 439.24 RN/L = 2.9206

SECTION ( 1)BODY FLAP UPPER DEPENDENT VARIABLE CP

| X/LB | 1.0180 | 1.0460 |
|---|---|---|
| PHI | | |
| .000 | -.3573 | -.3664 |
| 40.000 | -.3471 | -.3602 |

ALPHA ( 3) = 3.967 BETA ( 2) = .154 MACH = 1.3959 Q = 599.13 P = 439.24 RN/L = 2.9206

SECTION ( 1)BODY FLAP UPPER DEPENDENT VARIABLE CP

| X/LB | 1.0180 | 1.0460 |
|---|---|---|
| PHI | | |
| .000 | -.3602 | -.3559 |
| 40.000 | -.3514 | -.3578 |

ALPHA ( 3) = 3.885 BETA ( 3) = 4.208 MACH = 1.3959 Q = 599.13 P = 439.24 RN/L = 2.9206

SECTION ( 1)BODY FLAP UPPER DEPENDENT VARIABLE CP

| X/LB | 1.0180 | 1.0460 |
|---|---|---|
| PHI | | |
| .000 | -.3535 | -.3593 |
| 40.000 | -.3643 | -.3857 |

AMES 11-073(OA149) -140A/B/C/R ORB BODY FLAP UP (XEBFOB)

ALPHA ( 4) = 7.888 BETA ( 1) = -3.901 MACH = 1.3952 Q = 599.12 P = 439.71 RN/L = 2.9176

SECTION ( 1) BODY FLAP UPPER DEPENDENT VARIABLE CP

| X/LB | 1.0180 | 1.0460 |
|---|---|---|
| PHI | | |
| .000 | -.3746 | -.3760 |
| 40.000 | -.3851 | -.3741 |

ALPHA ( 4) = 7.841 BETA ( 2) = .144 MACH = 1.3952 Q = 599.12 P = 439.71 RN/L = 2.9176

SECTION ( 1) BODY FLAP UPPER DEPENDENT VARIABLE CP

| X/LB | 1.0180 | 1.0460 |
|---|---|---|
| PHI | | |
| .000 | -.3692 | -.3742 |
| 40.000 | -.3866 | -.3709 |

ALPHA ( 4) = 7.942 BETA ( 3) = 4.207 MACH = 1.3952 Q = 599.12 P = 439.71 RN/L = 2.9176

SECTION ( 1) BODY FLAP UPPER DEPENDENT VARIABLE CP

| X/LB | 1.0180 | 1.0460 |
|---|---|---|
| PHI | | |
| .000 | -.3639 | -.3620 |
| 40.000 | -.3761 | -.3925 |

ALPHA ( 5) = 11.892 BETA ( 1) = -3.888 MACH = 1.3944 Q = 599.11 P = 440.18 RN/L = 2.9183

SECTION ( 1) BODY FLAP UPPER DEPENDENT VARIABLE CP

| X/LB | 1.0180 | 1.0460 |
|---|---|---|
| PHI | | |
| .000 | -.3880 | -.3833 |
| 40.000 | -.3904 | -.3916 |

ALPHA ( 5) = 11.897 BETA ( 2) = .146 MACH = 1.3944 Q = 599.11 P = 440.18 RN/L = 2.9183

SECTION ( 1) BODY FLAP UPPER DEPENDENT VARIABLE CP

| X/LB | 1.0180 | 1.0460 |
|---|---|---|
| PHI | | |
| .000 | -.3865 | -.3951 |
| 40.000 | -.3818 | -.3923 |

AMES 11-073(CA14 R ORB BODY FLAP UP (XE8F08)

ALPHA ( 5) = 11.893 BETA ( 3) = 4.224 MACH Q = 599.11 P = 440.18 RN/L = 2.9183

SECTION ( 1)BODY FLAP UPPER DEPENDENT V.

| X/LB | 1.0180 | 1.0460 |
|---|---|---|
| PHI | | |
| .000 | -.3968 | -.3880 |
| 40.000 | -.3939 | -.4042 |

ALPHA ( 6) = 15.905 BETA ( 1) = -3.863 MACH = 1.3948 Q = 599.11 P = 439.94 RN/L = 2.9186

SECTION ( 1)BODY FLAP UPPER DEPENDENT VARIABLE CP

| X/LB | 1.0180 | 1.0460 |
|---|---|---|
| PHI | | |
| .000 | -.4040 | -.3689 |
| 40.000 | -.4026 | -.4153 |

ALPHA ( 6) = 15.918 BETA ( 2) = .144 MACH = 1.3948 Q = 599.11 P = 439.94 RN/L = 2.9186

SECTION ( 1)BODY FLAP UPPER DEPENDENT VARIABLE CP

| X/LB | 1.0180 | 1.0460 |
|---|---|---|
| PHI | | |
| .000 | -.4092 | -.3815 |
| 40.000 | -.4063 | -.4156 |

ALPHA ( 6) = 15.908 BETA ( 3) = 4.250 MACH = 1.3948 Q = 599.11 P = 439.94 RN/L = 2.9186

SECTION ( 1)BODY FLAP UPPER DEPENDENT VARIABLE CP

| X/LB | 1.0180 | 1.0460 |
|---|---|---|
| PHI | | |
| .000 | -.4049 | -.3643 |
| 40.000 | -.4138 | -.4334 |

AMES 11-073(OA148) -140A/B/C/R ORB BODY FLAP UP (XE8F09) ( 05 AUG 75 )

REFERENCE DATA

SREF = 2690.0000 SQ.FT. XMRP = 1076.6800 IN. XO
LREF = 474.8000 IN. YMRP = .0000 IN. YO
BREF = 936.0680 IN. ZMRP = 375.0000 IN. ZO
SCALE = .0300

PARAMETRIC DATA

RUDDER = .000 SPDBRK = 85.000
BDFLAP = 22.500 L-ELVN = .000
R-ELVN = .000 MACH = 1.250

ALPHA ( 1) = -4.026 BETA ( 1) = -3.882 MACH = 1.2460 Q = 599.62 P = 551.80 RN/L = 3.0276

SECTION ( 1)BODY FLAP UPPER DEPENDENT VARIABLE CP

| X/LB | 1.0180 | 1.0460 |
|---|---|---|
| PHI | | |
| .000 | -.3623 | -.3530 |
| 40.000 | -.3945 | -.4029 |

ALPHA ( 1) = -4.017 BETA ( 2) = .155 MACH = 1.2460 Q = 599.62 P = 551.80 RN/L = 3.0276

SECTION ( 1)BODY FLAP UPPER DEPENDENT VARIABLE CP

| X/LB | 1.0180 | 1.0460 |
|---|---|---|
| PHI | | |
| .000 | -.3568 | -.3468 |
| 40.000 | -.3793 | -.3965 |

ALPHA ( 1) = -4.025 BETA ( 3) = 4.236 MACH = 1.2460 Q = 599.62 P = 551.80 RN/L = 3.0276

SECTION ( 1)BODY FLAP UPPER DEPENDENT VARIABLE CP

| X/LB | 1.0180 | 1.0460 |
|---|---|---|
| PHI | | |
| .000 | -.3704 | -.3640 |
| 40.000 | -.3840 | -.4110 |

ALPHA ( 2) = .013 BETA ( 1) = -3.903 MACH = 1.2463 Q = 599.67 P = 551.57 RN/L = 3.0283

SECTION ( 1)BODY FLAP UPPER DEPENDENT VARIABLE CP

| X/LB | 1.0180 | 1.0460 |
|---|---|---|
| PHI | | |
| .000 | -.3743 | -.3741 |
| 40.000 | -.3925 | -.4044 |

AMES 11-073(OA148) -140A/B/C/R ORB BODY FLAP UP (XE8F09)

ALPHA ( 2) = .017 BETA ( 2) = .152 MACH = 1.2463 Q = 599.67 P = 551.57 RN/L = 3.0283

SECTION ( 1)BODY FLAP UPPER DEPENDENT VARIABLE CP

| X/LB | 1.0180 | 1.0460 |
|---|---|---|
| PHI | | |
| .000 | -.3739 | -.3825 |
| 40.000 | -.3839 | -.4030 |

ALPHA ( 2) = .013 BETA ( 3) = 4.217 MACH = 1.2463 Q = 599.67 P = 551.57 RN/L = 3.0283

SECTION ( 1)BODY FLAP UPPER DEPENDENT VARIABLE CP

| X/LB | 1.0180 | 1.0460 |
|---|---|---|
| PHI | | |
| .000 | -.3938 | -.4015 |
| 40.000 | -.3845 | -.4050 |

ALPHA ( 3) = 3.907 BETA ( 1) = -3.907 MACH = 1.2463 Q = 599.67 P = 551.57 RN/L = 3.0276

SECTION ( 1)BODY FLAP UPPER DEPENDENT VARIABLE CP

| X/LB | 1.0180 | 1.0460 |
|---|---|---|
| PHI | | |
| .000 | -.3965 | -.4053 |
| 40.000 | -.3960 | -.4051 |

ALPHA ( 3) = 3.907 BETA ( 2) = .148 MACH = 1.2463 Q = 599.67 P = 551.57 RN/L = 3.0276

SECTION ( 1)BODY FLAP UPPER DEPENDENT VARIABLE CP

| X/LB | 1.0180 | 1.0460 |
|---|---|---|
| PHI | | |
| .000 | -.4028 | -.4128 |
| 40.000 | -.4035 | -.4195 |

ALPHA ( 3) = 3.911 BETA ( 3) = 4.207 MACH = 1.2463 Q = 599.67 P = 551.57 RN/L = 3.0276

SECTION ( 1)BODY FLAP UPPER DEPENDENT VARIABLE CP

| X/LB | 1.0180 | 1.0460 |
|---|---|---|
| PHI | | |
| .000 | -.4011 | -.4076 |
| 40.000 | -.3990 | -.4219 |

AMES 11-073(OA148) -140A/B/C/R ORB BODY FLAP UP (XE8F09)

ALPHA ( 4) = 7.933 BETA ( 1) = -3.903 MACH = 1.2463 Q = 599.67 P = 551.57 RN/L = 3.0282

SECTION ( 1)BODY FLAP UPPER DEPENDENT VARIABLE CP

| X/LB | 1.0180 | 1.0460 |
|---|---|---|
| PHI | | |
| .000 | -.4240 | -.4283 |
| 40.000 | -.4150 | -.4202 |

ALPHA ( 4) = 7.889 BETA ( 2) = .143 MACH = 1.2463 Q = 599.67 P = 551.57 RN/L = 3.0282

SECTION ( 1)BODY FLAP UPPER DEPENDENT VARIABLE CP

| X/LB | 1.0180 | 1.0460 |
|---|---|---|
| PHI | | |
| .000 | -.4259 | -.4280 |
| 40.000 | -.4229 | -.4293 |

ALPHA ( 4) = 7.857 BETA ( 3) = 4.208 MACH = 1.2463 Q = 599.67 P = 551.57 RN/L = 3.0282

SECTION ( 1)BODY FLAP UPPER DEPENDENT VARIABLE CP

| X/LB | 1.0180 | 1.0460 |
|---|---|---|
| PHI | | |
| .000 | -.4181 | -.4162 |
| 40.000 | -.4324 | -.4527 |

ALPHA ( 5) = 11.893 BETA ( 1) = -3.885 MACH = 1.2447 Q = 599.41 P = 552.74 RN/L = 3.0279

SECTION ( 1)BODY FLAP UPPER DEPENDENT VARIABLE CP

| X/LB | 1.0180 | 1.0460 |
|---|---|---|
| PHI | | |
| .000 | -.4420 | -.4315 |
| 40.000 | -.4399 | -.4451 |

ALPHA ( 5) = 11.849 BETA ( 2) = .145 MACH = 1.2447 Q = 599.41 P = 552.74 RN/L = 3.0279

SECTION ( 1)BODY FLAP UPPER DEPENDENT VARIABLE CP

| X/LB | 1.0180 | 1.0460 |
|---|---|---|
| PHI | | |
| .000 | -.4372 | -.4290 |
| 40.000 | -.4448 | -.4503 |

ORIGINAL PAGE IS OF POOR QUALITY

AMES 11-073(OA148) -140A/B/C/R ORB BODY FLAP UP (XEBF09)

ALPHA ( 5) = 11.848 BETA ( 3) = 4.220 MACH = 1.2447 Q = 599.41 P = 552.74 RN/L = 3.0279

SECTION ( 1)BODY FLAP UPPER DEPENDENT VARIABLE CP

| X/LB | 1.0180 | 1.0460 |
|---|---|---|
| PHI | | |
| .000 | -.4443 | -.4460 |
| 40.000 | -.4458 | -.4656 |

AMES 11-073(OA148) -140A/B/C/R ORB BODY FLAP UP (XE8F10) ( 05 AUG 75 )

REFERENCE DATA

SREF = 2690.0000 SQ.FT. XMRP = 1076.6800 IN. XO
LREF = 474.8000 IN. YMRP = .0000 IN. YO
BREF = 936.0580 IN. ZMRP = 375.0000 IN. ZO
SCALE = .0300

PARAMETRIC DATA

RUDDER = .000 SPDBRK = 85.000
BDFLAP = 22.500 L-ELVN = .000
R-ELVN = .000 MACH = 1.100

ALPHA ( 1) = -4.037 BETA ( 1) = -3.883 MACH = 1.0577 Q = 598.52 P = 709.53 RN/L = 3.1914

SECTION ( 1)BODY FLAP UPPER DEPENDENT VARIABLE CP

| X/LB | 1.0180 | 1.0460 |
|---|---|---|
| PHI | | |
| .000 | -.4108 | -.4136 |
| 40.000 | -.4275 | -.4442 |

ALPHA ( 1) = -4.035 BETA ( 2) = .155 MACH = 1.0977 Q = 598.52 P = 709.53 RN/L = 3.1914

SECTION ( 1)BODY FLAP UPPER DEPENDENT VARIABLE CP

| X/LB | 1.0180 | 1.0460 |
|---|---|---|
| PHI | | |
| .000 | -.4103 | -.4150 |
| 40.000 | -.4136 | -.4373 |

ALPHA ( 1) = -4.042 BETA ( 3) = 4.235 MACH = 1.0977 Q = 598.52 P = 709.53 RN/L = 3.1914

SECTION ( 1)BODY FLAP UPPER DEPENDENT VARIABLE CP

| X/LB | 1.0180 | 1.0460 |
|---|---|---|
| PHI | | |
| .000 | -.4237 | -.4299 |
| 40.000 | -.4335 | -.4660 |

ALPHA ( 2) = .020 BETA ( 1) = -3.899 MACH = 1.0996 Q = 598.85 P = 707.64 RN/L = 3.1885

SECTION ( 1)BODY FLAP UPPER DEPENDENT VARIABLE CP

| X/LB | 1.0180 | 1.0460 |
|---|---|---|
| PHI | | |
| .000 | -.4075 | -.4116 |
| 40.000 | -.4290 | -.4340 |

AMES 11-073(OA148) -140A/B/C/R ORB BODY FLAP UP (XEBF10)

ALPHA ( 2) = .025 BETA ( 2) = .152 MACH = 1.0996 Q = 598.85 P = 707.64 RN/L = 3.1885

SECTION ( 1)BODY FLAP UPPER DEPENDENT VARIABLE CP

| X/LB | 1.0180 | 1.0460 |
|---|---|---|
| PHI | | |
| .000 | -.4022 | -.4106 |
| 40.000 | -.4046 | -.4297 |

ALPHA ( 2) = .023 BETA ( 3) = 4.214 MACH = 1.09[illegible] Q = 598.85 P = 707.64 RN/L = 3.1885

SECTION ( 1)BODY FLAP UPPER DEPENDENT VARIABLE (

| X/LB | 1.0180 | 1.0460 |
|---|---|---|
| PHI | | |
| .000 | -.4176 | -.4262 |
| 40.000 | -.4066 | -.4271 |

ALPHA ( 3) = 3.934 BETA ( 1) = -3.903 MACH = 1.0985 Q = 598.62 P = 708.59 RN/L = 3.1905

SECTION ( 1)BODY FLAP UPPER DEPENDENT VARIABLE CP

| X/LB | 1.0180 | 1.0460 |
|---|---|---|
| PHI | | |
| .000 | -.4273 | -.4335 |
| 40.000 | -.4251 | -.4359 |

ALPHA ( 3) = 3.940 BETA ( 2) = .149 MACH = 1.0985 Q = 598.62 P = 708.59 RN/L = 3.1905

SECTION ( 1)BODY FLAP UPPER DEPENDENT VARIABLE CP

| X/LB | 1.0180 | 1.0460 |
|---|---|---|
| PHI | | |
| .000 | -.4242 | -.4290 |
| 40.000 | -.4232 | -.4423 |

ALPHA ( 3) = 3.944 BETA ( 3) = 4.204 MACH = 1.0985 Q = 598.62 P = 708.59 RN/L = 3.1905

SECTION ( 1)BODY FLAP UPPER DEPENDENT VARIABLE CP

| X/LB | 1.0180 | 1.0460 |
|---|---|---|
| PHI | | |
| .000 | -.4331 | -.4347 |
| 40.000 | -.4398 | -.4642 |

AMES 11-073(OA148) -140A/B/C/R ORB BODY FLAP UP (XE8F10)

ALPHA ( 4) = 7.892 BETA ( 1) = -3.899 MACH = 1.0980 Q = 598.61 P = 709.30 RN/L = 3.1901

SECTION ( 1)BODY FLAP UPPER DEPENDENT VARIABLE CP

| X/LB | 1.0180 | 1.0460 |
|---|---|---|
| PHI | | |
| .000 | -.4594 | -.4644 |
| 40.000 | -.4553 | -.4596 |

ALPHA ( 4) = 7.887 BETA ( 2) = .144 MACH = 1.0980 Q = 598.61 P = 709.30 RN/L = 3.1901

SECTION ( 1)BODY FLAP UPPER DEPENDENT VARIABLE CP

| X/LB | 1.0180 | 1.0460 |
|---|---|---|
| PHI | | |
| .000 | -.4511 | -.4564 |
| 40.000 | -.4432 | -.4583 |

ALPHA ( 4) = 7.888 BETA ( 3) = 4.206 M = 1.0980 Q = 598.61 P = 709.30 RN/L = 3.1901

SECTION ( 1)BODY FLAP UPPER DEPENDENT VARIABLE CP

| X/LB | 1.0180 | 1.0460 |
|---|---|---|
| PHI | | |
| .000 | -.4617 | -.4591 |
| 40.000 | -.4672 | -.4935 |

ALPHA ( 5) = 11.921 BETA ( 1) = -3.873 MACH = 1.0991 Q = 599.16 P = 708.60 RN/L = 3.1919

SECTION ( 1)BODY FLAP UPPER DEPENDENT VARIABLE CP

| X/LB | 1.0180 | 1.0460 |
|---|---|---|
| PHI | | |
| .000 | -.4515 | -.4774 |
| 40.000 | -.4974 | -.4929 |

ALPHA ( 5) = 11.930 BETA ( 2) = .146 MACH = 1.0991 Q = 599.16 P = 708.60 RN/L = 3.1919

SECTION ( 1)BODY FLAP UPPER DEPENDENT VARIABLE CP

| X/LB | 1.0180 | 1.0460 |
|---|---|---|
| PHI | | |
| .000 | -.4694 | -.4794 |
| 40.000 | -.4763 | -.5099 |

AMES 11-073(OA148) -140A/B/C/R ORB BODY FLAP UP (XE8F10)

ALPHA ( 5) = 11.928 BETA ( 3) = 4.214 MACH = 1.0991 Q = 599.16 P = 708.60 RN/L = 3.1919

SECTION ( 1)BODY FLAP UPPER DEPENDENT VARIABLE CP

| X/L9 | 1.0180 | 1.0460 |
|---|---|---|
| PHI | | |
| .000 | -.4943 | -.5043 |
| 40.000 | -.4950 | -.5163 |

AMES 11-073(OA148) -140A/B/C/R ORB BODY FLAP UP (XEBF11) ( 05 AUG 75 )

REFERENCE DATA

SREF = 2690.0000 SQ.FT. XMRP = 1076.6800 IN. XO
LREF = 474.5000 IN. YMRP = .0000 IN. YO
BREF = 936.0690 IN. ZMRP = 375.0000 IN. ZO
SCALE = .0300

PARAMETRIC DATA

RUDDER = .000 SPDBRK = 85.000
BDFLAP = 22.500 L-ELVN = .000
R-ELVN = .000 MACH = .900

ALPHA ( 1) = -4.067 BETA ( 1) = -3.873 MACH = .90043 Q = 600.11 P = 1057.3 RN/L = 3.5778

SECTION ( 1)BODY FLAP UPPER DEPENDENT VARIABLE CP

| X/LB | 1.0180 | 1.0460 |
|---|---|---|
| PHI | | |
| .000 | -.3643 | -.3626 |
| 40.000 | -.3686 | -.3778 |

ALPHA ( 1) = -4.047 BETA ( 2) = .148 MACH = .90043 Q = 600.11 P = 1057.3 RN/L = 3.5778

SECTION ( 1)BODY FLAP UPPER DEPENDENT VARIABLE CP

| X/LB | 1.0180 | 1.0460 |
|---|---|---|
| PHI | | |
| .000 | -.3512 | -.3507 |
| 40.000 | -.3643 | -.3998 |

ALPHA ( 1) = -4.057 BETA ( 3) = 4.239 MACH = .90043 Q = 600.11 P = 1057.3 RN/L = 3.5778

SECTION ( 1)BODY FLAP UPPER DEPENDENT VARIABLE CP

| X/LB | 1.0180 | 1.0460 |
|---|---|---|
| PHI | | |
| .000 | -.3502 | -.3493 |
| 40.000 | -.3829 | -.4122 |

ALPHA ( 2) = .016 BETA ( 1) = -3.906 MACH = .89947 Q = 599.38 P = 1058.3 RN/L = 3.5741

SECTION ( 1)BODY FLAP UPPER DEPENDENT VARIABLE CP

| X/LB | 1.0180 | 1.0460 |
|---|---|---|
| PHI | | |
| .000 | -.3624 | -.3681 |
| 40.000 | -.3609 | -.3801 |

ORIGINAL PAGE IS
OF POOR QUALITY

AMES 11-073(OA148) -140A/B/C/R ORB BODY FLAP UP (XEBF11)

ALPHA ( 2) = .014 BETA ( 2) = .139 MACH = .89947 Q = 599.38 P = 1058.3 RN/L = 3.5741

SECTION ( 1)BODY FLAP UPPER DEPENDENT VARIABLE CP

| X/LB | 1.0180 | 1.0460 |
|---|---|---|
| PHI | | |
| .000 | -.3437 | -.3451 |
| 40.000 | -.3544 | -.3744 |

ALPHA ( 2) = .024 BETA ( 3) = 4.220 MACH = .89947 Q = 599.38 P = 1058.3 RN/L = 3.5741

SECTION ( 1)BODY FLAP UPPER DEPENDENT VARIABLE CP

| X/LB | 1.0180 | 1.0460 |
|---|---|---|
| PHI | | |
| .000 | -.3485 | -.3455 |
| 40.000 | -.3664 | -.3984 |

ALPHA ( 3) = 3.936 BETA ( 1) = -3.911 MACH = .89917 Q = 599.47 P = 1059.2 RN/L = 3.5758

SECTION ( 1)BODY FLAP UPPER DEPENDENT VARIABLE CP

| X/LB | 1.0180 | 1.0460 |
|---|---|---|
| PHI | | |
| .000 | -.3532 | -.3573 |
| 40.000 | -.3511 | -.3647 |

ALPHA ( 3) = 3.937 BETA ( 2) = .151 MACH = .89917 Q = 599.47 P = 1059.2 RN/L = 3.5758

SECTION ( 1)BODY FLAP UPPER DEPENDENT VARIABLE CP

| X/LB | 1.0180 | 1.0460 |
|---|---|---|
| PHI | | |
| .000 | -.3451 | -.3420 |
| 40.000 | -.3484 | -.3746 |

ALPHA ( 3) = 3.940 BETA ( 3) = 4.207 MACH = .89917 Q = 599.47 P = 1059.2 RN/L = 3.5758

SECTION ( 1)BODY FLAP UPPER DEPENDENT VARIABLE CP

| X/LB | 1.0180 | 1.0460 |
|---|---|---|
| PHI | | |
| .000 | -.3565 | -.3570 |
| 40.000 | -.3537 | -.3630 |

AMES 11-073(OA148) -140A/B/C/R ORB BODY FLAP UP (XEBF11)

ALPHA ( 4) = 7.890 BETA ( 1) = -3.900 MACH = .99940 Q = 599.79 P = 1059.2 RN/L = 3.5790

SECTION ( 1)BODY FLAP UPPER DEPENDENT VARIABLE CP

| X/LB | 1.0180 | 1.0460 |
|---|---|---|
| PHI | | |
| .000 | -.3493 | -.3443 |
| 40.000 | -.3517 | -.3732 |

ALPHA ( 4) = 7.894 BETA ( 2) = .145 MACH = .89940 Q = 599.79 P = 1059.2 RN/L = 3.5790

SECTION ( 1)BODY FLAP UPPER DEPENDENT VARIABLE CP

| X/LB | 1.0180 | 1.0460 |
|---|---|---|
| PHI | | |
| .000 | -.3369 | -.3388 |
| 40.000 | -.3441 | -.3610 |

ALPHA ( 4) = 7.892 BETA ( 3) = 4.207 MACH = .89940 Q = 599.79 P = 1059.2 RN/L = 3.5790

SECTION ( 1)BODY FLAP UPPER DEPENDENT VARIABLE CP

| X/LB | 1.0180 | 1.0460 |
|---|---|---|
| PHI | | |
| .000 | -.3612 | -.3665 |
| 40.000 | -.3533 | -.3639 |

ALPHA ( 5) = 11.932 BETA ( 1) = -3.884 MACH = .89887 Q = 599.34 P = 1059.7 RN/L = 3.5747

SECTION ( 1)BODY FLAP UPPER DEPENDENT VARIABLE CP

| X/LB | 1.0180 | 1.0460 |
|---|---|---|
| PHI | | |
| .000 | -.3576 | -.3572 |
| 40.000 | -.3448 | -.3643 |

ALPHA ( 5) = 11.939 BETA ( 2) = .149 MACH = .89887 Q = 599.34 P = 1059.7 RN/L = 3.5747

SECTION ( 1)BODY FLAP UPPER DEPENDENT VARIABLE CP

| X/LB | 1.0180 | 1.0460 |
|---|---|---|
| PHI | | |
| .000 | -.3509 | -.3602 |
| 40.000 | -.3421 | -.3631 |

AMES 11-073(OA148) -140A/B/C/R ORB BODY FLAP UP (XEBF11)

ALPHA ( 5) = 11.928 BETA ( 3) = 4.228 MACH = .89887 Q = 599.34 P = 1059.7 RN/L = 3.5747

SECTION ( 1)BODY FLAP UPPER DEPENDENT VARIABLE CP

| X/LB | 1.0180 | 1.0460 |
|---|---|---|
| PHI | | |
| .000 | -.3462 | -.3753 |
| 43.000 | -.3661 | -.4007 |

AMES 11-073(OA148) -140A/B/C/R-ORB BODY FLAP UP (XEBF12) ( 05 AUG 75 )

REFERENCE DATA

SREF = 2690.0000 SQ.FT. XMRP = 1076.6800 IN. XO
LREF = 474.8000 IN. YMRP = .0000 IN. YO
BREF = 936.0680 IN. ZMRP = 375.0000 IN. ZO
SCALE = .0300

PARAMETRIC DATA

RUDDER = .000 SPDBRK = 85.000
BDFLAP = 22.500 L-ELVN = .000
R-ELVN = .000 MACH = .600

ALPHA ( 1) = -4.057 BETA ( 1) = -7.889 MACH = .59636 Q = 593.96 P = 2385.7 RN/L = 4.8160

SECTION ( 1)BODY FLAP UPPER DEPENDENT VARIABLE CP

| X/LB | 1.0180 | 1.0460 |
|---|---|---|
| PHI | | |
| .000 | -.3005 | -.2813 |
| 40.000 | -.3358 | -.3567 |

ALPHA ( 1) = -4.036 BETA ( 2) = -3.874 MACH = .59636 Q = 593.96 P = 2385.7 RN/L = 4.8160

SECTION ( 1)BODY FLAP UPPER DEPENDENT VARIABLE CP

| X/LB | 1.0180 | 1.0460 |
|---|---|---|
| PHI | | |
| .000 | -.3038 | -.2933 |
| 40.000 | -.3314 | -.3636 |

ALPHA ( 1) = -4.017 BETA ( 3) = .163 MACH = .59636 Q = 593.96 P = 2385.7 RN/L = 4.8160

SECTION ( 1)BODY FLAP UPPER DEPENDENT VARIABLE CP

| X/LB | 1.0180 | 1.0460 |
|---|---|---|
| PHI | | |
| .000 | -.3046 | -.2868 |
| 40.000 | -.3294 | -.3714 |

ALPHA ( 1) = -4.026 BETA ( 4) = 4.234 MACH = .59636 Q = 593.96 P = 2385.7 RN/L = 4.8160

SECTION ( 1)BODY FLAP UPPER DEPENDENT VARIABLE CP

| X/LB | 1.0180 | 1.0460 |
|---|---|---|
| PHI | | |
| .000 | -.2905 | -.2785 |
| 40.000 | -.3412 | -.3726 |

AMES 11-073(OA148) -140A/B/C/R ORB BODY FLAP UP (XE8F12)

ALPHA ( 1) = -4.040 BETA ( 5) = 8.307 MACH = .59636 Q = 593.96 P = 2385.7 RN/L = 4.8160

SECTION ( 1)BODY FLAP UPPER DEPENDENT VARIABLE CP

| X/LB | 1.0180 | 1.0460 |
|---|---|---|
| PHI | | |
| .000 | -.3016 | -.2973 |
| 40.000 | -.3256 | -.3499 |

ALPHA ( 2) = .047 BETA ( 1) = -7.924 MACH = .59654 Q = 594.31 P = 2385.7 RN/L = 4.8134

SECTION ( 1)BODY FLAP UPPER DEPENDENT VARIABLE CP

| X/LB | 1.0180 | 1.0460 |
|---|---|---|
| PHI | | |
| .000 | -.3084 | -.2869 |
| 40.000 | -.3272 | -.3642 |

ALPHA ( 2) = .057 BETA ( 2) = -3.897 MACH = .59654 Q = 594.31 P = 2385.7 RN/L = 4.8134

SECTION ( 1)BODY FLAP UPPER DEPENDENT VARIABLE CP

| X/LB | 1.0180 | 1.0460 |
|---|---|---|
| PHI | | |
| .000 | -.3098 | -.2979 |
| 40.000 | -.3260 | -.3535 |

ALPHA ( 2) = .058 BETA ( 3) = .160 MACH = .59654 Q = 594.31 P = 2385.7 RN/L = 4.8134

SECTION ( 1)BODY FLAP UPPER DEPENDENT VARIABLE CP

| X/LB | 1.0180 | 1.0460 |
|---|---|---|
| PHI | | |
| .000 | -.2978 | -.2902 |
| 40.000 | -.3188 | -.3538 |

ALPHA ( 2) = .052 BETA ( 4) = 4.215 MACH = .59654 Q = 594.31 P = 2385.7 RN/L = 4.8134

SECTION ( 1)BODY FLAP UPPER DEPENDENT VARIABLE CP

| X/LB | 1.0180 | 1.0460 |
|---|---|---|
| PHI | | |
| .000 | -.2964 | -.2804 |
| 40.000 | -.3378 | -.3754 |

AMES 11-073(OA148) -140A/B/C/R ORB BODY FLAP UP (XE8F12)

ALPHA ( 2) = .048 BETA ( 5) = 8.271 MACH = .59654 Q = 594.31 P = 2385.7 RN/L = 4.8134

SECTION ( 1)BODY FLAP UPPER DEPENDENT VARIABLE CP

| X/LB | 1.0180 | 1.0460 |
|---|---|---|
| PHI | | |
| .000 | -.3017 | -.2972 |
| 40.000 | -.3305 | -.3590 |

ALPHA ( 3) = 3.956 BETA ( 1) = -7.937 MACH = .59690 Q = 595.02 P = 2385.7 RN/L = 4.8206

SECTION ( 1)BODY FLAP UPPER DEPENDENT VARIABLE CP

| X/LB | 1.0180 | 1.0460 |
|---|---|---|
| PHI | | |
| .000 | -.3004 | -.2971 |
| 40.000 | -.3225 | -.3589 |

ALPHA ( 3) = 3.958 BETA ( 2) = -3.898 MACH = .59690 Q = 595.02 P = 2385.7 RN/L = 4.8206

SECTION ( 1)BODY FLAP UPPER DEPENDENT VARIABLE CP

| X/LB | 1.0180 | 1.0460 |
|---|---|---|
| PHI | | |
| .000 | -.3074 | -.2903 |
| 40.000 | -.3162 | -.3498 |

ALPHA ( 3) = 3.957 BETA ( 3) = .162 MACH = .59690 Q = 595.02 P = 2385.7 RN/L = 4.8206

SECTION ( 1)BODY FLAP UPPER DEPENDENT VARIABLE CP

| X/LB | 1.0180 | 1.0460 |
|---|---|---|
| PHI | | |
| .000 | -.2967 | -.2957 |
| 40.000 | -.3166 | -.3492 |

ALPHA ( 3) = 3.954 BETA ( 4) = 4.202 MACH = .59690 Q = 595.02 P = 2385.7 RN/L = 4.8206

SECTION ( 1)BODY FLAP UPPER DEPENDENT VARIABLE CP

| X/LB | 1.0180 | 1.0460 |
|---|---|---|
| PHI | | |
| .000 | -.3038 | -.2986 |
| 40.000 | -.3269 | -.3549 |

AMES 11-073(OA148) -140A/B/C/R ORB BODY FLAP UP (XE8F12)

ALPHA ( 3) = 3.960 BETA ( 5) = 8.252 MACH = .59690 Q = 595.02 P = 2385.7 RN/L = 4.8206

SECTION ( 1)BODY FLAP UPPER DEPENDENT VARIABLE CP

| X/LB | 1.0190 | 1.0460 |
|---|---|---|
| PHI | | |
| .000 | -.3139 | -.3234 |
| 40.000 | -.3097 | -.3451 |

ALPHA ( 4) = 7.904 BETA ( 1) = -7.922 MACH = .59690 Q = 595.02 P = 2385.7 RN/L = 4.8202

SECTION ( 1)BODY FLAP UPPER DEPENDENT VARIABLE CP

| X/LB | 1.0180 | 1.0460 |
|---|---|---|
| PHI | | |
| .000 | -.3082 | -.2930 |
| 40.000 | -.3308 | -.3517 |

ALPHA ( 4) = 7.913 BETA ( 2) = -3.891 MACH = .59690 Q = 595.02 P = 2385.7 RN/L = 4.8202

SECTION ( 1)BODY FLAP UPPER DEPENDENT VARIABLE CP

| X/LB | 1.0180 | 1.0460 |
|---|---|---|
| PHI | | |
| .000 | -.3034 | -.2867 |
| 40.000 | -.3115 | -.3488 |

ALPHA ( 4) = 7.912 BETA ( 3) = .160 MACH = .59690 Q = 595.02 P = 2385.7 RN/L = 4.8202

SECTION ( 1)BODY FLAP UPPER DEPENDENT VARIABLE CP

| X/LB | 1.0180 | 1.0460 |
|---|---|---|
| PHI | | |
| .000 | -.3033 | -.3009 |
| 40.000 | -.3083 | -.3378 |

ALPHA ( 4) = 7.910 BETA ( 4) = 4.204 MACH = .59690 Q = 595.02 P = 2385.7 RN/L = 4.8202

SECTION ( 1)BODY FLAP UPPER DEPENDENT VARIABLE CP

| X/LB | 1.0180 | 1.0460 |
|---|---|---|
| PHI | | |
| .000 | -.3106 | -.3116 |
| 40.000 | -.3137 | -.3466 |

AMES 11-073(OA148) -140A/B/C/R ORB BODY FLAP UP (XE8F12)

ALPHA ( 4) = 7.909 BETA ( 5) = 8.256 MACH = .59690 Q = 595.02 P = 2385.7 RN/L = 4.8202

SECTION ( 1)BODY FLAP UPPER DEPENDENT VARIABLE CP

| X/LB | 1.0180 | 1.0460 |
|---|---|---|
| PHI | | |
| .000 | -.3318 | -.3330 |
| 40.000 | -.3011 | -.3322 |

ALPHA ( 5) = 11.950 BETA ( 1) = -7.879 MACH = .59660 Q = 594.43 P = 2385.7 RN/L = 4.8162

SECTION ( 1)BODY FLAP UPPER DEPENDENT VARIABLE CP

| X/LB | 1.0180 | 1.0460 |
|---|---|---|
| PHI | | |
| .000 | -.2961 | -.3028 |
| 40.000 | -.3169 | -.3433 |

ALPHA ( 5) = 11.968 BETA ( 2) = -3.871 MACH = .59660 Q = 594.43 P = 2385.7 RN/L = 4.8162

SECTION ( 1)BODY FLAP UPPER DEPENDENT VARIABLE CP

| X/LB | 1.0180 | 1.0460 |
|---|---|---|
| PHI | | |
| .000 | -.2943 | -.2827 |
| 40.000 | -.3082 | -.3448 |

ALPHA ( 5) = 11.970 BETA ( 3) = .156 MACH = .59660 Q = 594.43 P = 2385.7 RN/L = 4.8162

SECTION ( 1)BODY FLAP UPPER DEPENDENT VARIABLE CP

| X/LB | 1.0180 | 1.0460 |
|---|---|---|
| PHI | | |
| .000 | -.2954 | -.2811 |
| 40.000 | -.2881 | -.3261 |

ALPHA ( 5) = 11.968 BETA ( 4) = 4.216 MACH = .59660 Q = 594.43 P = 2385.7 RN/L = 4.8162

SECTION ( 1)BODY FLAP UPPER DEPENDENT VARIABLE CP

| X/LB | 1.0180 | 1.0460 |
|---|---|---|
| PHI | | |
| .000 | -.3055 | -.3119 |
| 40.000 | -.2907 | -.3343 |

AMES 11-073(OA148) -140A/B/C/R ORB BODY FLAP UP (XEBF12)

ALPHA ( 5) = 11.959 BETA ( 5) = 8.279 MACH = .59660 Q = 594.43 P = 2385.7 RN/L = 4.8162

SECTION ( 1)BODY FLAP UPPER DEPENDENT VARIABLE CP

| X/LB | 1.0180 | 1.0460 |
|---|---|---|
| PHI | | |
| .000 | -.3038 | -.3209 |
| 40.000 | -.2766 | -.3235 |

AMES 11-073(OA148) -140A/B/C/R ORB BODY FLAP UP (XEBF13) ( 05 AUG 75 )

REFERENCE DATA

SREF = 2690.0000 SQ.FT. XMRP = 1076.6800 IN. XO
LREF = 474.8000 IN. YMRP = .0000 IN. YO
BREF = 936.0680 IN. ZMRP = 375.0000 IN. ZO
SCALE = .0300

PARAMETRIC DATA

RUDDER = .000 SPDBRK = 35.000
BDFLAP = .000 L-ELVN = .000
R-ELVN = .000 MACH = 1.400

ALPHA ( 1) = -4.106 BETA ( 1) = -3.886 MACH = 1.3946 Q = 599.93 P = 440.65 RN/L = 2.9118

SECTION ( 1)BODY FLAP UPPER DEPENDENT VARIABLE CP

| X/LB | 1.0180 | 1.0460 |
|---|---|---|
| PHI | | |
| .000 | -.3126 | -.3164 |
| 40.000 | -.3390 | -.3530 |

ALPHA ( 1) = -4.030 BETA ( 2) = .154 MACH = 1.3946 Q = 599.93 P = 440.65 RN/L = 2.9118

SECTION ( 1)BODY FLAP UPPER DEPENDENT VARIABLE CP

| X/LB | 1.0180 | 1.0460 |
|---|---|---|
| PHI | | |
| .000 | -.3136 | -.3181 |
| 40.000 | -.3392 | -.3507 |

ALPHA ( 1) = -4.039 BETA ( 3) = 4.249 MACH = 1.3946 Q = 599.93 P = 440.65 RN/L = 2.9118

SECTION ( 1)BODY FLAP UPPER DEPENDENT VARIABLE CP

| X/LB | 1.0180 | 1.0460 |
|---|---|---|
| PHI | | |
| .000 | -.3168 | -.3218 |
| 40.000 | -.3381 | -.3485 |

ALPHA ( 2) = -.033 BETA ( 1) = -3.905 MACH = 1.3950 Q = 599.93 P = 440.41 RN/L = 2.9115

SECTION ( 1)BODY FLAP UPPER DEPENDENT VARIABLE CP

| X/LB | 1.0180 | 1.0460 |
|---|---|---|
| PHI | | |
| .000 | -.3299 | -.3352 |
| 40.000 | -.3226 | -.3404 |

ORIGINAL PAGE IS
OF POOR QUALITY

AMES 11-073(OA148) -140A/B/C/R ORB BODY FLAP UP (XEBF13)

ALPHA ( 2) = -.028 BETA ( 2) = .144 MACH = 1.3950 Q = 599.93 P = 440.41 RN/L = 2.9115

SECTION ( 1)BODY FLAP UPPER DEPENDENT VARIABLE CP

| X/LB | 1.0180 | 1.0460 |
|---|---|---|
| PHI | | |
| .000 | -.3201 | -.3296 |
| 40.000 | -.3298 | -.3388 |

ALPHA ( 2) = -.033 BETA ( 3) = 4.229 MACH = 1.3950 Q = 599.93 P = 440.41 RN/L = 2.9115

SECTION ( 1)BODY FLAP UPPER DEPENDENT VARIABLE CP

| X/LB | 1.0180 | 1.0460 |
|---|---|---|
| PHI | | |
| .000 | -.3215 | -.3309 |
| 40.000 | -.3378 | -.3457 |

ALPHA ( 3) = 3.851 BETA ( 1) = -3.904 MACH = 1.3941 Q = 600.12 P = 441.12 RN/L = 2.9157

SECTION ( 1)BODY FLAP UPPER DEPENDENT VARIABLE CP

| X/LB | 1.0180 | 1.0460 |
|---|---|---|
| PHI | | |
| .000 | -.3284 | -.3305 |
| 40.000 | -.3210 | -.3350 |

ALPHA ( 3) = 3.949 BETA ( 2) = .141 MACH = 1.3941 Q = 600.12 P = 441.12 RN/L = 2.9157

SECTION ( 1)BODY FLAP UPPER DEPENDENT VARIABLE CP

| X/LB | 1.0180 | 1.0460 |
|---|---|---|
| PHI | | |
| .000 | -.3162 | -.3207 |
| 40.000 | -.3199 | -.3229 |

ALPHA ( 3) = 3.862 BETA ( 3) = 4.219 MACH = 1.3941 Q = 600.12 P = 441.12 RN/L = 2.9157

SECTION ( 1)BODY FLAP UPPER DEPENDENT VARIABLE CP

| X/LB | 1.0180 | 1.0460 |
|---|---|---|
| PHI | | |
| .000 | -.3205 | -.3273 |
| 40.000 | -.3316 | -.3364 |

AMES 11-073(OA148) -140A/B/C/R ORB BODY FLAP UP (XE8F13)

ALPHA ( 4) = 7.881 BETA ( 1) = -3.904 MACH = 1.3932 Q = 600.00 P = 441.59 RN/L = 2.9150

SECTION ( 1)BODY FLAP UPPER DEPENDENT VARIABLE CP

| X/LB | 1.0180 | 1.0460 |
|---|---|---|
| PHI | | |
| .000 | -.3371 | -.3419 |
| 40.000 | -.3300 | -.3405 |

ALPHA ( 4) = 7.933 BETA ( 2) = .128 MACH = 1.3932 Q = 600.00 P = 441.59 RN/L = 2.9150

SECTION ( 1)BODY FLAP UPPER DEPENDENT VARIABLE CP

| X/LB | 1.0180 | 1.0460 |
|---|---|---|
| PHI | | |
| .000 | -.3256 | -.3339 |
| 40.000 | -.3292 | -.3375 |

ALPHA ( 4) = 7.934 BETA ( 3) = 4.214 MACH = 1.3932 Q = 600.00 P = 441.59 RN/L = 2.9150

SECTION ( 1)BODY FLAP UPPER DEPENDENT VARIABLE CP

| X/LB | 1.0180 | 1.0460 |
|---|---|---|
| PHI | | |
| .000 | -.3291 | -.3379 |
| 40.000 | -.3393 | -.3457 |

ALPHA ( 5) = 11.884 BETA ( 1) = -3.887 MACH = 1.3946 Q = 599.92 P = 440.65 RN/L = 2.9185

SECTION ( 1)BODY FLAP UPPER DEPENDENT VARIABLE CP

| X/LB | 1.0180 | 1.0460 |
|---|---|---|
| PHI | | |
| .000 | -.3468 | -.3490 |
| 40.000 | -.3383 | -.3321 |

ALPHA ( 5) = 11.891 BETA ( 2) = .152 MACH = 1.3946 Q = 599.92 P = 440.65 RN/L = 2.9185

SECTION ( 1)BODY FLAP UPPER DEPENDENT VARIABLE CP

| X/LB | 1.0180 | 1.0460 |
|---|---|---|
| PHI | | |
| .000 | -.3385 | -.3445 |
| 40.000 | -.3475 | -.3599 |

AMES 11-073(OA148) -140A/B/C/R ORB BODY FLAP UP (XE8F13)

ALPHA ( 5) = 11.887 BETA ( 3) = 4.229 MACH = 1.3946 Q = 599.92 P = 440.65 RN/L = 2.9185

SECTION ( 1)BODY FLAP UPPER DEPENDENT VARIABLE CP

| X/LB | 1.0180 | 1.0460 |
|---|---|---|
| PHI | | |
| .000 | -.3387 | -.3421 |
| 40.000 | -.3592 | -.3675 |

ALPHA ( 6) = 15.888 BETA ( 1) = -3.863 MACH = 1.3935 Q = 600.21 P = 441.59 RN/L = 2.9216

SECTION ( 1)BODY FLAP UPPER DEPENDENT VARIABLE CP

| X/LB | 1.0180 | 1.0460 |
|---|---|---|
| PHI | | |
| .000 | -.3674 | -.3707 |
| 40.000 | -.3356 | -.3456 |

ALPHA ( 6) = 15.865 BETA ( 2) = .152 MACH = 1.3935 Q = 600.21 P = 441.59 RN/L = 2.9216

SECTION ( 1)BODY FLAP UPPER DEPENDENT VARIABLE CP

| X/LB | 1.0180 | 1.0460 |
|---|---|---|
| PHI | | |
| .000 | -.3488 | -.3436 |
| 40.000 | -.3792 | -.3930 |

ALPHA ( 6) = 15.903 BETA ( 3) = 4.263 MACH = 1.3935 Q = 600.21 P = 441.59 RN/L = 2.9216

SECTION ( 1)BODY FLAP UPPER DEPENDENT VARIABLE CP

| X/LB | 1.0180 | 1.0460 |
|---|---|---|
| PHI | | |
| .000 | -.3705 | -.3740 |
| 40.000 | -.3857 | -.3880 |

AMES 11-073(OA148) -140A/B/C/R ORB BODY FLAP UP (XEBF14) ( 05 AUG 75 )

REFERENCE DATA

SREF = 2690.0000 SQ.FT. XMRP = 1076.6800 IN. XO
LREF = 474.8000 IN. YMRP = .0000 IN. YO
BREF = 985.0000 IN. ZMRP = 375.0000 IN. ZO
SCALE = .0300

PARAMETRIC DATA

RUDDER = .000 SPDBRK = 35.000
BDFLAP = .000 L-ELVN = .000
R-ELVN = .000 MACH = 1.250

ALPHA ( 1) = -4.010 BETA ( 1) = -3.884 MACH = 1.2452 Q = 599.70 P = 552.51 RN/L = 3.0159

SECTION ( 1)BODY FLAP UPPER DEPENDENT VARIABLE CP

| X/LB | 1.0180 | 1.0460 |
|---|---|---|
| PHI | | |
| .000 | -.3424 | -.3517 |
| 40.000 | -.3726 | -.3854 |

ALPHA ( 1) = -3.944 BETA ( 2) = .148 MACH = 1.2452 Q = 599.70 P = 552.51 RN/L = 3.0159

SECTION ( 1)BODY FLAP UPPER DEPENDENT VARIABLE CP

| X/LB | 1.0180 | 1.0460 |
|---|---|---|
| PHI | | |
| .000 | -.3392 | -.3460 |
| 40.000 | -.3631 | -.3758 |

ALPHA ( 1) = -4.009 BETA ( 3) = 4.237 MACH = 1.2452 Q = 599.70 P = 552.51 RN/L = 3.0159

SECTION ( 1)BODY FLAP UPPER DEPENDENT VARIABLE CP

| X/LB | 1.0180 | 1.0460 |
|---|---|---|
| PHI | | |
| .000 | -.3567 | -.3621 |
| 40.000 | -.3700 | -.3868 |

ALPHA ( 2) = .205 BETA ( 1) = -3.866 MACH = 1.2472 Q = 601.31 P = 552.29 RN/L = 3.0212

SECTION ( 1)BODY FLAP UPPER DEPENDENT VARIABLE CP

| X/LB | 1.0180 | 1.0460 |
|---|---|---|
| PHI | | |
| .000 | -.3547 | -.3625 |
| 40.000 | -.3509 | -.3713 |

AMES 11-073(OA148) -140A/B/C/R ORB BODY FLAP UP (XE8F14)

ALPHA ( 2) = .220 BETA ( 2) = .185 MACH = 1.2472 Q = 601.31 P = 552.29 RN/L = 3.0212

SECTION ( 1)BODY FLAP UPPER DEPENDENT VARIABLE CP

| X/LB | 1.0180 | 1.0460 |
|---|---|---|
| PHI | | |
| .000 | -.3468 | -.3555 |
| 40.000 | -.3520 | -.3648 |

ALPHA ( 2) = .215 BETA ( 3) = 4.264 MACH = 1.2472 Q = 601.31 P = 552.29 RN/L = 3.0212

SECTION ( 1)BODY FLAP UPPER DEPENDENT VARIABLE CP

| X/LB | 1.0180 | 1.0460 |
|---|---|---|
| PHI | | |
| .000 | -.3531 | -.3643 |
| 40.000 | -.3759 | -.3868 |

ALPHA ( 3) = 3.903 BETA ( 1) = -3.872 MACH = 1.2473 Q = 600.93 P = 551.82 RN/L = 3.0266

SECTION ( 1)BODY FLAP UPPER DEPENDENT VARIABLE CP

| X/LB | 1.0180 | 1.0460 |
|---|---|---|
| PHI | | |
| .000 | -.3539 | -.3617 |
| 40.000 | -.3546 | -.3617 |

ALPHA ( 3) = 3.903 BETA ( 2) = .184 MACH = 1.2473 Q = 600.93 P = 551.82 RN/L = 3.0266

SECTION ( 1)BODY FLAP UPPER DEPENDENT VARIABLE CP

| X/LB | 1.0180 | 1.0460 |
|---|---|---|
| PHI | | |
| .000 | -.3522 | -.3631 |
| 40.000 | -.3527 | -.3664 |

ALPHA ( 3) = 3.907 BETA ( 3) = 4.256 MACH = 1.2473 Q = 600.93 P = 551.82 RN/L = 3.0266

SECTION ( 1)BODY FLAP UPPER DEPENDENT VARIABLE CP

| X/LB | 1.0180 | 1.0460 |
|---|---|---|
| PHI | | |
| .000 | -.3610 | -.3738 |
| 40.000 | -.3664 | -.3835 |

AMES 11-073(OA143) -140A/B/C/R ORB BODY FLAP UP (XE8F14)

ALPHA ( 4) = 7.853 BETA ( 1) = -3.870 MACH = 1.2469 Q = 600.88 P = 552.06 RN/L = 3.0236

SECTION ( 1)BODY FLAP UPPER DEPENDENT VARIABLE CP

| X/LB | 1.0180 | 1.0460 |
|---|---|---|
| PHI | | |
| .000 | -.3709 | -.3801 |
| 40.000 | -.3640 | -.3808 |

ALPHA ( 4) = 7.959 BETA ( 2) = .181 MACH = 1.2469 Q = 600.88 P = 552.06 RN/L = 3.0236

SECTION ( 1)BODY FLAP UPPER DEPENDENT VARIABLE CP

| X/LB | 1.0180 | 1.0460 |
|---|---|---|
| PHI | | |
| .000 | -.3600 | -.3585 |
| 40.000 | -.3626 | -.3740 |

ALPHA ( 4) = 7.960 BETA ( 3) = 4.251 MACH = 1.2469 Q = 600.88 P = 552.06 RN/L = 3.0236

SECTION ( 1)BODY FLAP UPPER DEPENDENT VARIABLE CP

| X/LB | 1.0180 | 1.0460 |
|---|---|---|
| PHI | | |
| .000 | -.3674 | -.3766 |
| 40.000 | -.3880 | -.3956 |

ALPHA ( 5) = 11.929 BETA ( 1) = -3.853 MACH = 1.2466 Q = 600.83 P = 552.29 RN/L = 3.0248

SECTION ( 1)BODY FLAP UPPER DEPENDENT VARIABLE CP

| X/LB | 1.0180 | 1.0460 |
|---|---|---|
| PHI | | |
| .000 | -.3855 | -.3893 |
| 40.000 | -.3786 | -.3844 |

ALPHA ( 5) = 11.937 BETA ( 2) = .177 MACH = 1.2466 Q = 600.83 P = 552.29 RN/L = 3.0248

SECTION ( 1)BODY FLAP UPPER DEPENDENT VARIABLE CP

| X/LB | 1.0180 | 1.0460 |
|---|---|---|
| PHI | | |
| .000 | -.3703 | -.3782 |
| 40.000 | -.3841 | -.3991 |

AMES 11-073(OA148) -140A/B/C/R ORB BODY FLAP UP (XEBF14)

ALPHA ( 5) = 11.932 BETA ( 3) = 4.267 MACH = 1.2466 Q = 600.83 P = 552.29 PN/L = 3.0248

SECTION ( 1)BODY FLAP UPPER DEPENDENT VARIABLE CP

| X/LB | 1.0190 | 1.0460 |
|---|---|---|
| PHI | | |
| .000 | -.3910 | -.3903 |
| 40.000 | -.3879 | -.3927 |

AMES 11-073(OA148) -140A/B/C/R QRB BODY FLAP UP (XE8F15) ( 05 AUG 75 )

REFERENCE DATA

SREF = 2690.0000 SQ.FT. XMRP = 1076.6600 IN. XO
LREF = 474.8000 IN. YMRP = .0000 IN. YO
BREF = 930.0680 IN. ZMRP = 375.0000 IN. ZO
SCALE = .0300

PARAMETRIC DATA

RUDDER = .000 SPDBRK = 35.000
BDFLAP = .000 L-ELVN = .000
R-ELVN = .000 MACH = 1.100

ALPHA ( 1) = -4.072 BETA ( 1) = -3.851 MACH = 1.0992 Q = 599.97 P = 709.32 RN/L = 3.1890

SECTION ( 1)BODY FLAP UPPER DEPENDENT VARIABLE CP

| X/LB | 1.0180 | 1.0460 |
|---|---|---|
| PHI | | |
| .000 | -.3831 | .3947 |
| 40.000 | -.3992 | -.4063 |

ALPHA ( 1) = -4.070 BETA ( 2) = .189 MACH = 1.0992 Q = 599.97 P = 709.32 RN/L = 3.1890

SECTION ( 1)BODY FLAP UPPER DEPENDENT VARIABLE CP

| X/LB | 1.0180 | 1.0460 |
|---|---|---|
| PHI | | |
| .000 | -.3739 | -.3810 |
| 40.000 | -.3732 | -.3891 |

ALPHA ( 1) = -4.075 BETA ( 3) = 4.283 MACH = 1.0992 Q = 599.97 P = 709.32 RN/L = 3.1890

SECTION ( 1)BODY FLAP UPPER DEPENDENT VARIABLE CP

| X/LB | 1.0180 | 1.0460 |
|---|---|---|
| PHI | | |
| .000 | -.4045 | -.4093 |
| 40.000 | -.3945 | -.4035 |

ALPHA ( 2) = -.011 BETA ( 1) = -3.863 MACH = 1.0994 Q = 599.94 P = 709.08 RN/L = 3.1892

SECTION ( 1)BODY FLAP UPPER DEPENDENT VARIABLE CP

| X/LB | 1.0180 | 1.0460 |
|---|---|---|
| PHI | | |
| .000 | -.3636 | -.3773 |
| 40.000 | -.3780 | -.3885 |

ORIGINAL PAGE IS OF POOR QUALITY

AMES 11-073(OA148) -140A/B/C/R ORB BODY FLAP UP (XE8F15)

ALPHA ( 2) = -.004 BETA ( 2) = .183 MACH = 1.0994 Q = 599.94 P = 709.08 RN/L = 3.1892

SECTION ( 1)BODY FLAP UPPER DEPENDENT VARIABLE CP

| X/LB | 1.0180 | 1.0460 |
|---|---|---|
| PHI | | |
| .000 | -.3735 | -.3806 |
| 40.000 | -.3711 | -.3849 |

ALPHA ( 2) = -.007 BETA ( 3) = 4.260 MACH = 1.0994 Q = 599.94 P = 709.08 RN/L = 3.1892

SECTION ( 1)BODY FLAP UPPER DEPENDENT VARIABLE CP

| X/LB | 1.0180 | 1.0460 |
|---|---|---|
| PHI | | |
| .000 | -.3949 | -.4024 |
| 40.000 | -.3826 | -.4002 |

ALPHA ( 3) = 3.931 BETA ( 1) = -3.870 MACH = 1.0960 Q = 598.54 P = 711.89 RN/L = 3.1895

SECTION ( 1)BODY FLAP UPPER DEPENDENT VARIABLE CP

| X/LB | 1.0180 | 1.0460 |
|---|---|---|
| PHI | | |
| .000 | -.3922 | -.4046 |
| 40.000 | -.3880 | -.4029 |

ALPHA ( 3) = 3.932 BETA ( 2) = .189 MACH = 1.0960 Q = 598.54 P = 711.89 RN/L = 3.1895

SECTION ( 1)BODY FLAP UPPER DEPENDENT VARIABLE CP

| X/LB | 1.0180 | 1.0460 |
|---|---|---|
| PHI | | |
| .000 | -.3852 | -.3943 |
| 40.000 | -.3795 | -.3962 |

ALPHA ( 3) = 3.935 BETA ( 3) = 4.249 MACH = 1.0960 Q = 598.54 P = 711.89 RN/L = 3.1895

SECTION ( 1)BODY FLAP UPPER DEPENDENT VARIABLE CP

| X/LB | 1.0180 | 1.0460 |
|---|---|---|
| PHI | | |
| .000 | -.4030 | -.4091 |
| 40.000 | -.3949 | -.4177 |

AMES 11-073(OA148) -140A/B/C/R ORB BODY FLAP UP (XE8F15)

ALPHA ( 4) = 7.934 BETA ( 1) = -3.865 MACH = 1.0986 Q = 599.29 P = 709.30 RN/L = 3.1886

SECTION ( 1)BODY FLAP UPPER DEPENDENT VARIABLE CP

| X/LB | 1.0180 | 1.0460 |
|---|---|---|
| PHI | | |
| .000 | -.4224 | -.4250 |
| 40.000 | -.4069 | -.4245 |

ALPHA ( 4) = 7.965 BETA ( 2) = .179 MACH = 1.0986 Q = 599.29 P = 709.30 RN/L = 3.1886

SECTION ( 1)BODY FLAP UPPER DEPENDENT VARIABLE CP

| X/LB | 1.0180 | 1.0460 |
|---|---|---|
| PHI | | |
| .000 | -.3885 | -.3961 |
| 40.000 | -.3802 | -.3954 |

ALPHA ( 4) = 7.956 BETA ( 3) = 4.242 MACH = 1.0986 Q = 599.29 P = 709.30 RN/L = 3.1886

SECTION ( 1)BODY FLAP UPPER DEPENDENT VARIABLE CP

| X/LB | 1.0180 | 1.0460 |
|---|---|---|
| PHI | | |
| .000 | -.4122 | -.4193 |
| 40.000 | -.4179 | -.4338 |

ALPHA ( 5) = 11.925 BETA ( 1) = -3.850 MACH = 1.0981 Q = 598.93 P = 709.53 RN/L = 3.1856

SECTION ( 1)BODY FLAP UPPER DEPENDENT VARIABLE CP

| X/LB | 1.0180 | 1.0460 |
|---|---|---|
| PHI | | |
| .000 | -.4157 | -.4159 |
| 40.000 | -.4250 | -.4243 |

ALPHA ( 5) = 11.933 BETA ( 2) = .177 MACH = 1.0981 Q = 598.93 P = 709.53 RN/L = 3.1856

SECTION ( 1)BODY FLAP UPPER DEPENDENT VARIABLE CP

| X/LB | 1.0180 | 1.0460 |
|---|---|---|
| PHI | | |
| .000 | -.4096 | -.4184 |
| 40.000 | -.4173 | -.4149 |

AMES 11-073(OA148) -140A/B/C/R ORB BODY FLAP UP (XEBF15)

ALPHA ( 5) = 11.928 BETA ( 3) = 4.259 MACH = 1.0991 Q = 598.93 P = 709.53 RN/L = 3.1856

SECTION ( 1)BODY FLAP UPPER DEPENDENT VARIABLE CP

| X/LB | 1.0180 | 1.0460 |
|---|---|---|
| PHI | | |
| .000 | -.4182 | -.4303 |
| 40.000 | -.4251 | -.4293 |

AMES 11-073(OA148) -140A/B/C/R ORB BODY FLAP UP (XE8F16) ( 05 AUG 75 )

REFERENCE DATA

SREF = 2690.0000 SQ.FT. XMRP = 1076.6800 IN. XO
LREF = 474.8000 IN. YMRP = .0000 IN. YO
BREF = 936.0880 IN. ZMRP = 375.0000 IN. ZO
SCALE = .0300

PARAMETRIC DATA

RUDDER = .000 SPDBRK = 35.000
BDFLAP = .000 L-ELVN = .000
R-ELVN = .000 MACH = .900

ALPHA ( 1) = -4.023 BETA ( 1) = -3.852 MACH = .90217 Q = 601.77 P = 1056.2 RN/L = 3.5811

SECTION ( 1)BODY FLAP UPPER DEPENDENT VARIABLE CP

| X/LB | 1.0180 | 1.0460 |
|---|---|---|
| PHI | | |
| .000 | -.2603 | -.2762 |
| 40.000 | -.2478 | -.2693 |

ALPHA ( 1) = -3.925 BETA ( 2) = .188 MACH = .90217 Q = 601.77 P = 1056.2 RN/L = 3.5811

SECTION ( 1)BODY FLAP UPPER DEPENDENT VARIABLE CP

| X/LB | 1.0180 | 1.0460 |
|---|---|---|
| PHI | | |
| .000 | -.2492 | -.2606 |
| 40.000 | -.2599 | -.2918 |

ALPHA ( 1) = -3.933 BETA ( 3) = 4.285 MACH = .90217 Q = 601.77 P = 1056.2 RN/L = 3.5811

SECTION ( 1)BODY FLAP UPPER DEPENDENT VARIABLE CP

| X/LB | 1.0180 | 1.0460 |
|---|---|---|
| PHI | | |
| .000 | -.2502 | -.2618 |
| 40.000 | -.2845 | -.2979 |

ALPHA ( 2) = .017 BETA ( 1) = -3.871 MACH = .89983 Q = 599.69 P = 1058.1 RN/L = 3.5748

SECTION ( 1)BODY FLAP UPPER DEPENDENT VARIABLE CP

| X/LB | 1.0180 | 1.0460 |
|---|---|---|
| PHI | | |
| .000 | -.2599 | -.2822 |
| 40.000 | -.2554 | -.2654 |

AMES 11-073(OA148) -140A/B/C/R ORB BODY FLAP UP (XE8F18)

ALPHA ( 2) = .043 BETA ( 2) = .183 MACH = .89983 Q = 599.69 P = 1058.1 RN/L = 3.5748

SECTION ( 1)BODY FLAP UPPER DEPENDENT VARIABLE CP

| X/LB | 1.0180 | 1.0460 |
|---|---|---|
| PHI | | |
| .000 | -.2524 | -.2638 |
| 40.000 | -.2586 | -.2776 |

ALPHA ( 2) = .037 BETA ( 3) = 4.263 MACH = .89983 Q = 599.69 P = 1058.1 RN/L = 3.5748

SECTION ( 1)BODY FLAP UPPER DEPENDENT VARIABLE CP

| X/LB | 1.0180 | 1.0460 |
|---|---|---|
| PHI | | |
| .000 | -.2507 | -.2671 |
| 40.000 | -.2797 | -.2928 |

ALPHA ( 3) = 3.891 BETA ( 1) = -3.877 MACH = .90107 Q = 600.53 P = 1056.6 RN/L = 3.5722

SECTION ( 1)BODY FLAP UPPER DEPENDENT VARIABLE CP

| X/LB | 1.0180 | 1.0460 |
|---|---|---|
| PHI | | |
| .000 | -.2485 | -.2609 |
| 40.000 | -.2378 | -.2473 |

ALPHA ( 3) = 4.016 BETA ( 2) = .188 MACH = .90107 Q = 600.53 P = 1056.6 RN/L = 3.5722

SECTION ( 1)BODY FLAP UPPER DEPENDENT VARIABLE CP

| X/LB | 1.0180 | 1.0460 |
|---|---|---|
| PHI | | |
| .000 | -.2345 | -.2449 |
| 40.000 | -.2406 | -.2620 |

ALPHA ( 3) = 4.017 BETA ( 3) = 4.257 MACH = .90107 Q = 600.53 P = 1056.6 RN/L = 3.5722

SECTION ( 1)BODY FLAP UPPER DEPENDENT VARIABLE CP

| X/LB | 1.0180 | 1.0460 |
|---|---|---|
| PHI | | |
| .000 | -.2441 | -.2662 |
| 40.000 | -.2650 | -.2748 |

AMES 11-073(OA148) -140A/B/C/R ORB BODY FLAP UP (XE8F16)

ALPHA ( 4) = 7.978 BETA ( 1) = -3.838 MACH = .90107 Q = 600.53 P = 1056.6 RN/L = 3.5741

SECTION ( 1)BODY FLAP UPPER DEPENDENT VARIABLE CP

| X/LB | 1.0180 | 1.0460 |
|---|---|---|
| PHI | | |
| .000 | -.2426 | -.2665 |
| 40.000 | -.2393 | -.2461 |

ALPHA ( 4) = 7.924 BETA ( 2) = .181 MACH = .90107 Q = 600.53 P = 1056.6 RN/L = 3.5741

SECTION ( 1)BODY FLAP UPPER DEPENDENT VARIABLE CP

| X/LB | 1.0180 | 1.0460 |
|---|---|---|
| PHI | | |
| .000 | -.2315 | -.2471 |
| 40.000 | -.2407 | -.2593 |

ALPHA ( 4) = 7.921 BETA ( 3) = 4.257 MACH = .90107 Q = 600.53 P = 1056.6 RN/L = 3.5741

SECTION ( 1)BODY FLAP UPPER DEPENDENT VARIABLE CP

| X/LB | 1.0180 | 1.0460 |
|---|---|---|
| PHI | | |
| .000 | -.2410 | -.2583 |
| 40.000 | -.2479 | -.2614 |

ALPHA ( 5) = 11.916 BETA ( 1) = -3.856 MACH = .90000 Q = 599.65 P = 1057.6 RN/L = 3.5745

SECTION ( 1)BODY FLAP UPPER DEPENDENT VARIABLE CP

| X/LB | 1.0180 | 1.0460 |
|---|---|---|
| PHI | | |
| .000 | -.2567 | -.2870 |
| 40.000 | -.2495 | -.2562 |

ALPHA ( 5) = 11.928 BETA ( 2) = .182 MACH = .90000 Q = 599.65 P = 1057.6 RN/L = 3.5745

SECTION ( 1)BODY FLAP UPPER DEPENDENT VARIABLE CP

| X/LB | 1.0180 | 1.0460 |
|---|---|---|
| PHI | | |
| .000 | -.2447 | -.2599 |
| 40.000 | -.2518 | -.2776 |

AMES 11-073(OA148) -140A/B/C/R ORB BODY FLAP UP (XEBF16)

ALPHA ( 5) = 11.917 BETA ( 3) = 4.273 MACH = .90000 Q = 599.65 P = 1057.6 RN/L = 3.5745

SECTION ( 1)BODY FLAP UPPER

DEPENDENT VARIABLE CP

| X/LB | 1.0180 | 1.0460 |
|---|---|---|
| PHI | | |
| .000 | -.2792 | -.2749 |
| 40.000 | -.2739 | -.2782 |

AMES 11-073(OA148) -140A/B/C/R ORB BODY FLAP UP (XEBF17) ( 05 AUG 75 )

REFERENCE DATA

SPEF = 2590.0000 SQ.FT. XMRP = 1076.6800 IN. XO
LREF = 474.8000 IN. YMRP = .0000 IN. YO
BREF = 936.0680 IN. ZMRP = 375.0000 IN. ZO
SCALE = .0300

PARAMETRIC DATA

RUDDER = .000 SPDBRK = 35.000
BDFLAP = .000 L-ELVN = .000
R-ELVN = .000 MACH = .600

ALPHA ( 1) = -4.112 BETA ( 1) = -7.854 MACH = .59694 Q = 595.28 P = 2386.4 RN/L = 4.8216

SECTION ( 1)BODY FLAP UPPER DEPENDENT VARIABLE CP

| X/LB | 1.0180 | 1.0460 |
|---|---|---|
| PHI | | |
| .000 | -.2510 | -.2832 |
| 40.000 | -.2486 | -.2659 |

ALPHA ( 1) = -4.096 BETA ( 2) = -3.838 MACH = .59694 Q = 595.28 P = 2386.4 RN/L = 4.8216

SECTION ( 1)BODY FLAP UPPER DEPENDENT VARIABLE CP

| X/LB | 1.0180 | 1.0460 |
|---|---|---|
| PHI | | |
| .000 | -.2409 | -.2834 |
| 40.000 | -.2417 | -.2637 |

ALPHA ( 1) = -4.079 BETA ( 3) = .201 MACH = .59694 Q = 595.28 P = 2386.4 RN/L = 4.8216

SECTION ( 1)BODY FLAP UPPER DEPENDENT VARIABLE CP

| X/LB | 1.0180 | 1.0460 |
|---|---|---|
| PHI | | |
| .000 | -.2349 | -.2560 |
| 40.000 | -.2399 | -.2714 |

ALPHA ( 1) = -4.086 BETA ( 4) = 4.270 MACH = .59694 Q = 595.28 P = 2386.4 RN/L = 4.8216

SECTION ( 1)BODY FLAP UPPER DEPENDENT VARIABLE CP

| X/LB | 1.0180 | 1.0460 |
|---|---|---|
| PHI | | |
| .000 | -.2329 | -.2580 |
| 40.000 | -.2691 | -.3123 |

ORIGINAL PAGE IS
OF POOR QUALITY

AMES 11-073(OA148) -140A/B/C/R ORB BODY FLAP UP (XEBF17)

ALPHA ( 1) = -4.101 BETA ( 5) = 8.352 MACH = .59694 Q = 595.28 P = 2386.4 RN/L = 4.8216

SECTION ( 1)BODY FLAP UPPER DEPENDENT VARIABLE CP

| X/LB | 1.0180 | 1.0460 |
|---|---|---|
| PHI | | |
| .000 | -.2398 | -.2560 |
| 40.000 | -.2947 | -.3213 |

ALPHA ( 2) = .084 BETA ( 1) = -7.892 MACH = .59642 Q = 594.20 P = 2386.3 RN/L = 4.8159

SECTION ( 1)BODY FLAP UPPER DEPENDENT VARIABLE CP

| X/LB | 1.0180 | 1.0460 |
|---|---|---|
| PHI | | |
| .000 | -.2553 | -.2873 |
| 40.000 | -.2361 | -.2771 |

ALPHA ( 2) = .094 BETA ( 2) = -3.858 MACH = .59642 Q = 594.20 P = 2386.3 RN/L = 4.8159

SECTION ( 1)BODY FLAP UPPER DEPENDENT VARIABLE CP

| X/LB | 1.0180 | 1.0460 |
|---|---|---|
| PHI | | |
| .000 | -.2423 | -.2820 |
| 40.000 | -.2336 | -.2499 |

ALPHA ( 2) = .071 BETA ( 3) = .198 MACH = .59642 Q = 594.20 P = 2386.3 RN/L = 4.8159

SECTION ( 1)BODY FLAP UPPER DEPENDENT VARIABLE CP

| X/LB | 1.0180 | 1.0460 |
|---|---|---|
| PHI | | |
| .000 | -.2289 | -.2552 |
| 40.000 | -.2446 | -.2638 |

ALPHA ( 2) = .068 BETA ( 4) = 4.249 MACH = .59642 Q = 594.20 P = 2386.3 RN/L = 4.8159

SECTION ( 1)BODY FLAP UPPER DEPENDENT VARIABLE CP

| X/LB | 1.0180 | 1.0460 |
|---|---|---|
| PHI | | |
| .000 | -.2324 | -.2524 |
| 40.000 | -.2759 | -.3007 |

AMES 11-073(OA148) -140A/B/C/RO ORB BODY FLAP UP (XE8F17) !?

ALPHA ( 2) = .061 BETA ( 5) = 8.308 MACH = .59642 Q = 594.20 P = 2386.3 RN/L = 4.8159

SECTION : 1)BODY FLAP UPPER DEPENDENT VARIABLE CP

| X/LB | 1.0180 | 1.0460 |
|---|---|---|
| PHI | | |
| .000 | -.2314 | -.2450 |
| 40.000 | -.2808 | -.2991 |

ALPHA ( 3) = 4.005 BETA ( 1) = -7.903 MACH = .59616 Q = 593.73 P = 2386.3 RN/L = 4.8137

SECTION : 1)BODY FLAP UPPER DEPENDENT VARIABLE CP

| X/LB | 1.0180 | 1.0460 |
|---|---|---|
| PHI | | |
| .000 | -.2574 | -.2900 |
| 40.000 | -.2401 | -.2560 |

ALPHA ( 3) = 4.010 BETA ( 2) = -3.866 MACH = .59616 Q = 593.73 P = 2386.3 RN/L = 4.8137

SECTION : 1)BODY FLAP UPPER DEPENDENT VARIABLE CP

| X/LB | 1.0180 | 1.0460 |
|---|---|---|
| PHI | | |
| .000 | -.2398 | -.2768 |
| 40.000 | -.2371 | -.2549 |

ALPHA ( 3) = 4.008 BETA ( 3) = .197 MACH = .59616 Q = 593.73 P = 2386.3 RN/L = 4.8137

SECTION : 1)BODY FLAP UPPER DEPENDENT VARIABLE CP

| X/LB | 1.0180 | 1.0460 |
|---|---|---|
| PHI | | |
| .000 | -.2186 | -.2395 |
| 40.000 | -.2338 | -.2478 |

ALPHA ( 3) = 4.011 BETA ( 4) = 4.242 MACH = .59616 Q = 593.73 P = 2386.3 RN/L = 4.8137

SECTION : 1)BODY FLAP UPPER DEPENDENT VARIABLE CP

| X/LB | 1.0180 | 1.0460 |
|---|---|---|
| PHI | | |
| .000 | -.2234 | -.2431 |
| 40.000 | -.2561 | -.2813 |

AMES 11-073(OA148) -140A/B/C/R ORB BODY FLAP UP (XEBF17)

ALPHA ( 3) = 4.014 BETA ( 5) = 8.290 MACH = .59616 Q = 593.73 P = 2386.3 RN/L = 4.8137

SECTION ( 1)BODY FLAP UPPER DEPENDENT VARIABLE CP

| X/LB | 1.0180 | 1.0460 |
|---|---|---|
| PHI | | |
| .000 | -.2237 | -.2463 |
| 40.000 | -.2724 | -.2907 |

ALPHA ( 4) = 7.901 BETA ( 1) = -7.891 MACH = .59650 Q = 594.32 P = 2386.1 RN/L = 4.8187

SECTION ( 1)BODY FLAP UPPER DEPENDENT VARIABLE CP

| X/LB | 1.0180 | 1.0460 |
|---|---|---|
| PHI | | |
| .000 | -.2684 | -.2971 |
| 40.000 | -.2365 | -.2710 |

ALPHA ( 4) = 7.913 BETA ( 2) = -3.664 MACH = .59650 Q = 594.32 P = 2386.1 RN/L = 4.8187

SECTION ( 1)BODY FLAP UPPER DEPENDENT VARIABLE CP

| X/LB | 1.0180 | 1.0460 |
|---|---|---|
| PHI | | |
| .000 | -.2301 | -.2527 |
| 40.000 | -.2306 | -.2420 |

ALPHA ( 4) = 7.919 BETA ( 3) = .190 MACH = .59650 Q = 594.32 P = 2386.1 RN/L = 4.8187

SECTION ( 1)BODY FLAP UPPER DEPENDENT VARIABLE CP

| X/LB | 1.0180 | 1.0460 |
|---|---|---|
| PHI | | |
| .000 | -.2181 | -.2348 |
| 40.000 | -.2257 | -.2452 |

ALPHA ( 4) = 7.918 BETA ( 4) = 4.240 MACH = .59650 Q = 594.32 P = 2386.1 RN/L = 4.8187

SECTION ( 1)BODY FLAP UPPER DEPENDENT VARIABLE CP

| X/LB | 1.0180 | 1.0460 |
|---|---|---|
| PHI | | |
| .000 | -.2155 | -.2340 |
| 40.000 | -.2516 | -.2549 |

AMES 11-073(OA148) -140A/B/C/R ORB BODY FLAP UP (XE8F17)

ALPHA ( 4) = 7.914 BETA ( 5) = 8.294 MACH = .59550 Q = 594.32 P = 2386.1 RN/L = 4.8167

SECTION ( 1)BODY FLAP UPPER DEPENDENT VARIABLE CP

| X/LB | 1.0180 | 1.0460 |
|---|---|---|
| PHI | | |
| .000 | -.2329 | -.2506 |
| 40.000 | -.2865 | -.3027 |

ALPHA ( 5) = 11.926 BETA ( 1) = -7.855 MACH = .59628 Q = 593.97 P = 2386.5 RN/L = 4.8170

SECTION ( 1)BODY FLAP UPPER DEPENDENT VARIABLE CP

| X/LB | 1.0180 | 1.0460 |
|---|---|---|
| PHI | | |
| .000 | -.2781 | -.3199 |
| 40.000 | -.2363 | -.2724 |

ALPHA ( 5) = 11.949 BETA ( 2) = -3.940 MACH = .59628 Q = 593.97 P = 2386.5 RN/L = 4.8170

SECTION ( 1)BODY FLAP UPPER DEPENDENT VARIABLE CP

| X/LB | 1.0180 | 1.0460 |
|---|---|---|
| PHI | | |
| .000 | -.2342 | -.2647 |
| 40.000 | -.2231 | -.2399 |

ALPHA ( 5) = 11.954 BETA ( 3) = .189 MACH = .59628 Q = 593.97 P = 2386.5 RN/L = 4.8170

SECTION ( 1)BODY FLAP UPPER DEPENDENT VARIABLE CP

| X/LB | 1.0180 | 1.0460 |
|---|---|---|
| PHI | | |
| .000 | -.2191 | -.2402 |
| 40.000 | -.2314 | -.2528 |

ALPHA ( 5) = 11.952 BETA ( 4) = 4.250 MACH = .59628 Q = 593.97 P = 2386.5 RN/L = 4.8170

SECTION ( 1)BODY FLAP UPPER DEPENDENT VARIABLE CP

| X/LB | 1.0180 | 1.0460 |
|---|---|---|
| PHI | | |
| .000 | -.2375 | -.2473 |
| 40.000 | -.2633 | -.2704 |

AMES 11-073(OA148) -140A/B/C/R ORB BODY FLAP UP (XEBF17)

ALPHA ( 5) = 11.942 BETA ( 5) = 8.320 MACH = .59628 Q = 593.97 P = 2385.5 RN/L = 4.8170

SECTION ( 1)BODY FLAP UPPER DEPENDENT VARIABLE CP

| X/LB | 1.0180 | 1.0450 |
|---|---|---|
| PHI | | |
| .000 | -.2612 | -.2798 |
| 40.000 | -.2917 | -.3060 |

AMES 11-073(OA148) -140A/B/C/R ORB BODY FLAP UP (XE8F18) ( 05 AUG 75 )

REFERENCE DATA

SREF = 2690.0000 SQ.FT. XMRP = 1076.6900 IN. XO
LREF = 474.8000 IN. YMRP = .0000 IN. YO
BREF = 936.0680 IN. ZMRP = 375.0000 IN. ZO
SCALE = .0300

PARAMETRIC DATA

RUDDER = .000 SPDBRK = .000
BDFLAP = -11.700 L-ELVN = .000
R-ELVN = .000 MACH = 1.400

ALPHA ( 1) = -4.050 BETA ( 1) = -3.854 MACH = 1.3965 Q = 599.95 P = 439.47 RN/L = 2.9144

SECTION ( 1)BODY FLAP UPPER DEPENDENT VARIABLE CP

| X/LB | 1.0180 | 1.0460 |
|---|---|---|
| PHI | | |
| .000 | -.3284 | -.3358 |
| 40.000 | -.3330 | -.3405 |

ALPHA ( 1) = -4.042 BETA ( 2) = .192 MACH = 1.3965 Q = 599.95 P = 439.47 RN/L = 2.9144

SECTION ( 1)BODY FLAP UPPER DEPENDENT VARIABLE CP

| X/LB | 1.0180 | 1.0460 |
|---|---|---|
| PHI | | |
| .000 | -.3285 | -.3355 |
| 40.000 | -.3326 | -.3428 |

ALPHA ( 1) = -4.051 BETA ( 3) = 4.285 MACH = 1.3965 Q = 599.95 P = 439.47 RN/L = 2.9144

SECTION ( 1)BODY FLAP UPPER DEPENDENT VARIABLE CP

| X/LB | 1.0180 | 1.0460 |
|---|---|---|
| PHI | | |
| .000 | -.3238 | -.3299 |
| 40.000 | -.3318 | -.3404 |

ALPHA ( 2) = -.030 BETA ( 1) = -3.874 MACH = 1.3950 Q = 599.63 P = 440.18 RN/L = 2.9101

SECTION ( 1)BODY FLAP UPPER DEPENDENT VARIABLE CP

| X/LB | 1.0180 | 1.0460 |
|---|---|---|
| PHI | | |
| .000 | -.3243 | -.3317 |
| 40.000 | -.3260 | -.3274 |

ORIGINAL PAGE IS OF POOR QUALITY

AMES 11-073(OA148) -140A/B/C/R ORB BODY FLAP UP (XE8F18)

ALPHA ( 2) = -.025 BETA ( 2) = .186 MACH = 1.3950 Q = 599.63 P = 440.18 RN/L = 2.9101

SECTION ( 1)BODY FLAP UPPER DEPENDENT VARIABLE CP

| X/LB | 1.0180 | 1.0460 |
|---|---|---|
| PHI | | |
| .000 | -.3208 | -.3253 |
| 40.000 | -.3205 | -.3250 |

ALPHA ( 2) = -.030 BETA ( 3) = 4.265 MACH = 1.3950 Q = 599.63 P = 440.18 RN/L = 2.9101

SECTION ( 1)BODY FLAP UPPER DEPENDENT VARIABLE CP

| X/LB | 1.0180 | 1.0460 |
|---|---|---|
| PHI | | |
| .000 | -.3273 | -.3349 |
| 40.000 | -.3330 | -.3368 |

ALPHA ( 3) = 3.919 BETA ( 1) = -3.877 MACH = 1.3940 Q = 599.41 P = 440.65 RN/L = 2.9155

SECTION ( 1)BODY FLAP UPPER DEPENDENT VARIABLE CP

| X/LB | 1.0180 | .0460 |
|---|---|---|
| PHI | | |
| .000 | -.3174 | -.3221 |
| 40.000 | -.3174 | -.3186 |

ALPHA ( 3) = 3.922 BETA ( 2) = .185 MACH = 1.3940 Q = 599.41 P = 440.65 RN/L = 2.9155

SECTION ( 1)BODY FLAP UPPER DEPENDENT VARIABLE CP

| X/LB | 1.0180 | 1.0460 |
|---|---|---|
| PHI | | |
| .000 | -.3091 | -.3127 |
| 40.000 | -.3137 | -.3156 |

ALPHA ( 3) = 3.923 BETA ( 3) = 4.255 MACH = 1.3940 Q = 599.41 P = 440.65 RN/L = 2.9155

SECTION ( 1)BODY FLAP UPPER DEPENDENT VARIABLE CP

| X/LB | 1.0180 | 1.0460 |
|---|---|---|
| PHI | | |
| .000 | -.3187 | -.3261 |
| 40.000 | -.3247 | -.3280 |

AMES 11-073(OA148) -140A/B/C/R ORB BODY FLAP UP (XE8F18)

ALPHA ( 4) = 7.792 BETA ( 1) = -3.867 MACH = 1.3956 Q = 599.84 P = 439.94 RN/L = 2.9129

SECTION ( 1)BODY FLAP UPPER DEPENDENT VARIABLE CP

| X/LB | 1.0180 | 1.0460 |
|---|---|---|
| PHI | | |
| .000 | -.3279 | -.3374 |
| 40.000 | -.3187 | -.3256 |

ALPHA ( 4) = 7.791 BETA ( 2) = .182 MACH = 1.3956 Q = 599.84 P = 439.94 RN/L = 2.9129

SECTION ( 1)BODY FLAP UPPER DEPENDENT VARIABLE CP

| X/LB | 1.0180 | 1.0460 |
|---|---|---|
| PHI | | |
| .000 | -.3168 | -.3211 |
| 40.000 | -.3180 | -.3258 |

ALPHA ( 4) = 7.919 BETA ( 3) = 4.252 MACH = 1.3956 Q = 599.84 P = 439.94 RN/L = 2.9129

SECTION ( 1)BODY FLAP UPPER DEPENDENT VARIABLE CP

| X/LB | 1.0180 | 1.0460 |
|---|---|---|
| PHI | | |
| .000 | -.3247 | -.3315 |
| 40.000 | -.3325 | -.3327 |

ALPHA ( 5) = 11.807 BETA ( 1) = -3.848 MACH = 1.3965 Q = 599.65 P = 439.24 RN/L = 2.9163

SECTION ( 1)BODY FLAP UPPER DEPENDENT VARIABLE CP

| X/LB | 1.0180 | 1.0460 |
|---|---|---|
| PHI | | |
| .000 | -.3442 | -.3516 |
| 40.000 | -.3286 | -.3469 |

ALPHA ( 5) = 11.815 BETA ( 2) = .187 MACH = 1.3965 Q = 599.65 P = 439.24 RN/L = 2.9163

SECTION ( 1)BODY FLAP UPPER DEPENDENT VARIABLE CP

| X/LB | 1.0180 | 1.0460 |
|---|---|---|
| PHI | | |
| .000 | -.3289 | -.3401 |
| 40.000 | -.3465 | -.3513 |

AMES 11-073(OA149) -140A/B/C/R ORB BODY FLAP UP (XE8F18)

ALPHA ( 5) = 11.810 BETA ( 3) = 4.268 MACH = 1.3965 Q = 599.65 P = 439.24 RN/L = 2.9163

SECTION ( 1)BODY FLAP UPPER DEPENDENT VARIABLE CP

| X/LB | 1.0180 | 1.0460 |
|---|---|---|
| PHI | | |
| .000 | -.3403 | -.3467 |
| 40.000 | -.3488 | -.3512 |

ALPHA ( 6) = 15.906 BETA ( 1) = -3.833 MACH = 1.3951 Q = 599.73 P = 440.18 RN/L = 2.9184

SECTION ( 1)BODY FLAP UPPER DEPENDENT VARIABLE CP

| X/LB | 1.0180 | 1.0460 |
|---|---|---|
| PHI | | |
| .000 | -.3588 | -.3649 |
| 40.000 | -.3445 | -.3759 |

ALPHA ( 6) = 15.920 BETA ( 2) = .184 MACH = 1.3951 Q = 599.73 P = 440.18 RN/L = 2.9184

SECTION ( 1)BODY FLAP UPPER DEPENDENT VARIABLE CP

| X/LB | 1.0180 | 1.0460 |
|---|---|---|
| PHI | | |
| .000 | -.3443 | -.3562 |
| 40.000 | -.3840 | -.3955 |

ALPHA ( 6) = 15.910 BETA ( 3) = 4.299 MACH = 1.3951 Q = 599.73 P = 440.18 RN/L = 2.9184

SECTION ( 1)BODY FLAP UPPER DEPENDENT VARIABLE CP

| X/LB | 1.0180 | 1.0460 |
|---|---|---|
| PHI | | |
| .000 | -.3595 | -.3746 |
| 40.000 | -.3694 | -.3635 |

AMES 11-073(OA148) -140A/B/C/R ORB BODY FLAP UP (XE8F19) ( 05 AUG 75 )

REFERENCE DATA

SREF = 2690.0000 SQ.FT. XMRP = 1076.6800 IN. XO
LREF = 474.8000 IN. YMRP = .0000 IN. YO
BREF = 936.0680 IN. ZMRP = 375.0000 IN. ZO
SCALE = .0300

PARAMETRIC DATA

RUDDER = .000 SPOBRK = .000
BDFLAP = -11.700 L-ELVN = .000
R-ELVN = .000 MACH = 1.250

ALPHA ( 1) = -4.048 BETA ( 1) = -3.848 MACH = 1.2478 Q = 600.12 P = 550.64 RN/L = 3.0180

SECTION ( 1)BODY FLAP UPPER DEPENDENT VARIABLE CP

| X/LB | 1.0180 | 1.0460 |
|---|---|---|
| PHI | | |
| .000 | -.3548 | -.3655 |
| 40.000 | -.3601 | -.3650 |

ALPHA ( 1) = -3.974 BETA ( 2) = .192 MACH = 1.2478 Q = 600.12 P = 550.64 RN/L = 3.0180

SECTION ( 1)BODY FLAP UPPER DEPENDENT VARIABLE CP

| X/LB | 1.0180 | 1.0460 |
|---|---|---|
| PHI | | |
| .000 | -.3483 | -.3573 |
| 40.000 | -.3502 | -.3600 |

ALPHA ( 1) = -3.984 BETA ( 3) = 4.283 MACH = 1.2478 Q = 600.12 P = 550.64 RN/L = 3.0180

SECTION ( 1)BODY FLAP UPPER DEPENDENT VARIABLE CP

| X/LB | 1.0180 | 1.0460 |
|---|---|---|
| PHI | | |
| .000 | -.3591 | -.3643 |
| 40.000 | -.3655 | -.3705 |

ALPHA ( 2) = -.051 BETA ( 1) = -3.861 MACH = 1.2471 Q = 599.71 P = 550.87 RN/L = 3.0179

SECTION ( 1)BODY FLAP UPPER DEPENDENT VARIABLE CP

| X/LB | 1.0180 | 1.0460 |
|---|---|---|
| PHI | | |
| .000 | -.3494 | -.3563 |
| 40.000 | -.3508 | -.3525 |

AMES 11-073(OA148) -140A/B/C/R ORB BODY FLAP UP (XE8F19)

ALPHA ( 2) = -.007 BETA ( 2) = .182 MACH = 1.2471 Q = 599.71 P = 550.87 RN/L = 3.0179

SECTION ( 1)BODY FLAP UPPER DEPENDENT VARIABLE CP

| X/LB | 1.0180 | 1.0460 |
|---|---|---|
| PHI | | |
| .000 | -.3388 | -.3449 |
| 40.000 | -.3397 | -.3466 |

ALPHA ( 2) = -.013 BETA ( 3) = 4.263 MACH = 1.2471 Q = 599.71 P = 550.87 RN/L = 3.0179

SECTION ( 1)BODY FLAP UPPER DEPENDENT VARIABLE CP

| X/LB | 1.0180 | 1.0460 |
|---|---|---|
| PHI | | |
| .000 | -.3612 | -.3641 |
| 40.000 | -.3538 | -.3684 |

ALPHA ( 3) = 3.859 BETA ( 1) = -3.873 MACH = 1.2484 Q = 600.53 P = 550.41 RN/L = 3.0214

SECTION ( 1)BODY FLAP UPPER DEPENDENT VARIABLE CP

| X/LB | 1.0180 | 1.0460 |
|---|---|---|
| PHI | | |
| .000 | -.3457 | -.3521 |
| 40.000 | -.3462 | -.3514 |

ALPHA ( 3) = 3.906 BETA ( 2) = .178 MACH = 1.2484 Q = 600.53 P = 550.41 RN/L = 3.0214

SECTION ( 1)BODY FLAP UPPER DEPENDENT VARIABLE CP

| X/LB | 1.0180 | 1.0460 |
|---|---|---|
| PHI | | |
| .000 | -.3427 | -.3488 |
| 40.000 | -.3451 | -.3505 |

ALPHA ( 3) = 3.928 BETA ( 3) = 4.253 MACH = 1.2484 Q = 600.53 P = 550.41 RN/L = 3.0214

SECTION ( 1)BODY FLAP UPPER DEPENDENT VARIABLE CP

| X/LB | 1.0180 | 1.0460 |
|---|---|---|
| PHI | | |
| .000 | -.3527 | -.3532 |
| 40.000 | -.3558 | -.3582 |

AMES 11-073(OA148) -140A/B/C/R ORB BODY FLAP UP (XEBF19)

ALPHA ( 4) = 7.851 BETA ( 1) = -3.877 MACH = 1.2474 Q = 600.07 P = 550.87 RN/L = 3.0223

SECTION ( 1)BODY FLAP UPPER DEPENDENT VARIABLE CP

| X/LB | 1.0180 | 1.0460 |
|---|---|---|
| PHI | | |
| .000 | -.3602 | -.3652 |
| 40.000 | -.3555 | -.3605 |

ALPHA ( 4) = 7.971 BETA ( 2) = .182 MACH = 1.2474 Q = 600.07 P = 550.87 RN/L = 3.0223

SECTION ( 1)BODY FLAP UPPER DEPENDENT VARIABLE CP

| X/LB | 1.0180 | 1.0460 |
|---|---|---|
| PHI | | |
| .000 | -.3567 | -.3593 |
| 40.000 | -.3524 | -.3636 |

ALPHA ( 4) = 7.972 BETA ( 3) = 4.253 MACH = 1.2474 Q = 600.07 P = 550.87 RN/L = 3.0223

SECTION ( 1)BODY FLAP UPPER DEPENDENT VARIABLE CP

| X/LB | 1.0180 | 1.0460 |
|---|---|---|
| PHI | | |
| .000 | -.3689 | -.3738 |
| 40.000 | -.3817 | -.3814 |

ALPHA ( 5) = 11.905 BETA ( 1) = -3.844 MACH = 1.2483 Q = 600.41 P = 550.41 RN/L = 3.0228

SECTION ( 1)BODY FLAP UPPER DEPENDENT VARIABLE CP

| X/LB | 1.0180 | 1.0460 |
|---|---|---|
| PHI | | |
| .000 | -.3725 | -.3857 |
| 40.000 | -.3568 | -.3537 |

ALPHA ( 5) = 11.915 BETA ( 2) = .187 MACH = 1.2483 Q = 600.41 P = 550.41 RN/L = 3.0228

SECTION ( 1)BODY FLAP UPPER DEPENDENT VARIABLE CP

| X/LB | 1.0180 | 1.0460 |
|---|---|---|
| PHI | | |
| .000 | -.3745 | -.3742 |
| 40.000 | -.3785 | -.3958 |

AMES 11-073(OA148) -140A/B/C/R ORB BODY FLAP UP (XEBF19)

ALPHA ( 5) = 11.907 BETA ( 3) = 4.269 MACH = 1.2483 Q = 600.41 P = 550.41 RN/L = 3.0228

SECTION ( 1)BODY FLAP UPPER DEPENDENT VARIABLE CP

| X/LB | 1.0160 | 1.0460 |
|---|---|---|
| PHI | | |
| .000 | -.3873 | -.4004 |
| 40.000 | -.3807 | -.3830 |

AMES 11-073(OA148) -140A/B/C/R ORB BODY FLAP UP (XEBF20) ( 05 AUG 75 )

REFERENCE DATA

SREF = 2690.0000 SQ.FT. XMRP = 1076.6800 IN. XO
LREF = 474.8000 IN. YMRP = .0000 IN. YO
BREF = 936.0480 IN. ZMRP = 375.0000 IN. ZO
SCALE = .0300

PARAMETRIC DATA

RUDDER = .000 SPDBRK = .000
BDFLAP = -11.700 L-ELVN = .000
R-ELVN = .000 MACH = 1.100

ALPHA ( 1) = -4.047 BETA ( 1) = -3.843 MACH = 1.1022 Q = 601.66 P = 707.48 RN/L = 3.1893

SECTION ( 1)BODY FLAP UPPER DEPENDENT VARIABLE CP

| X/LB | 1.0180 | 1.0460 |
|---|---|---|
| PHI | | |
| .000 | -.3840 | -.3975 |
| 40.000 | -.3919 | -.3918 |

ALPHA ( 1) = -3.971 BETA ( 2) = .189 MACH = 1.1022 Q = 601.66 P = 707.48 RN/L = 3.1893

SECTION ( 1)BODY FLAP UPPER DEPENDENT VARIABLE CP

| X/LB | 1.0180 | 1.0460 |
|---|---|---|
| PHI | | |
| .000 | -.3708 | -.3945 |
| 40.000 | -.3782 | -.3905 |

ALPHA ( 1) = -3.998 BETA ( 3) = 4.285 MACH = 1.1022 Q = 601.66 P = 707.48 RN/L = 3.1893

SECTION ( 1)BODY FLAP UPPER DEPENDENT VARIABLE CP

| X/LB | 1.0180 | 1.0460 |
|---|---|---|
| PHI | | |
| .000 | -.3830 | -.4029 |
| 40.000 | -.3882 | -.4017 |

ALPHA ( 2) = -.036 BETA ( 1) = -3.867 MACH = 1.1011 Q = 601.17 P = 708.39 RN/L = 3.1906

SECTION ( 1)BODY FLAP UPPER DEPENDENT VARIABLE CP

| X/LB | 1.0180 | 1.0460 |
|---|---|---|
| PHI | | |
| .000 | -.3668 | -.3903 |
| 40.000 | -.3652 | -.3766 |

ORIGINAL PAGE IS
OF POOR QUALITY

AMES 11-073(OA148) -140A/B/C/R ORB BODY FLAP UP (XEBF20)

ALPHA ( 2) = -.059 BETA ( 2) = .183 MACH = 1.1011 Q = 601.17 P = 708.39 RN/L = 3.1906

SECTION ( 1)BODY FLAP UPPER DEPENDENT VARIABLE CP

| X/LB | 1.0180 | 1.0460 |
|---|---|---|
| PHI | | |
| .000 | -.3591 | -.3823 |
| 40.000 | -.3636 | -.3752 |

ALPHA ( 2) = -.052 BETA ( 3) = 4.261 MACH = 1.1011 Q = 601.17 P = 708.39 RN/L = 3.1906

SECTION ( 1)BODY FLAP UPPER DEPENDENT VARIABLE CP

| X/LB | 1.0180 | 1.0460 |
|---|---|---|
| PHI | | |
| .000 | -.3681 | -.3857 |
| 40.000 | -.3705 | -.3821 |

ALPHA ( 3) = 3.856 BETA ( 1) = -3.869 MACH = 1.1013 Q = 601.26 P = 708.16 RN/L = 3.1838

SECTION ( 1)BODY FLAP UPPER DEPENDENT VARIABLE CP

| X/LB | 1.0180 | 1.0450 |
|---|---|---|
| PHI | | |
| .000 | -.3692 | -.3848 |
| 40.000 | -.3682 | -.3777 |

ALPHA ( 3) = 3.924 BETA ( 2) = .189 MACH = 1.1013 Q = 601.26 P = 708.16 RN/L = 3.1838

SECTION ( 1)BODY FLAP UPPER DEPENDENT VARIABLE CP

| X/LB | 1.0180 | 1.0460 |
|---|---|---|
| PHI | | |
| .000 | -.3611 | -.3839 |
| 40.000 | -.3644 | -.3741 |

ALPHA ( 3) = 3.921 BETA ( 3) = 4.251 MACH = 1.1013 Q = 601.26 P = 708.16 RN/L = 3.1838

SECTION ( 1)BODY FLAP UPPER DEPENDENT VARIABLE CP

| X/LB | 1.0180 | 1.0460 |
|---|---|---|
| PHI | | |
| .000 | -.3677 | -.3852 |
| 40.000 | -.3732 | -.3835 |

AMES 11-073(OA148) -140A/B/C/R ORB BODY FLAP UP (XEBF20)

ALPHA ( 4) = 7.863 BETA ( 1) = -3.854 MACH = 1.1008 Q = 600.53 P = 707.91 RN/L = 3.1857

SECTION ( 1)BODY FLAP UPPER DEPENDENT VARIABLE CP

| X/LB | 1.0180 | 1.0460 |
|---|---|---|
| PHI | | |
| .000 | -.3767 | -.3876 |
| 40.000 | -.3758 | -.3827 |

ALPHA ( 4) = 7.865 BETA ( 2) = .180 MACH = 1.1008 Q = 600.53 P = 707.91 RN/L = 3.1857

SECTION ( 1)BODY FLAP UPPER DEPENDENT VARIABLE CP

| X/LB | 1.0180 | 1.0460 |
|---|---|---|
| PHI | | |
| .000 | -.3689 | -.3832 |
| 40.000 | -.3701 | -.3789 |

ALPHA ( 4) = 7.863 BETA ( 3) = 4.247 MACH = 1.1008 Q = 600.53 P = 707.91 RN/L = 3.1857

SECTION ( 1)BODY FLAP UPPER DEPENDENT VARIABLE CP

| X/LB | 1.0180 | 1.0460 |
|---|---|---|
| PHI | | |
| .000 | -.3845 | -.3888 |
| 40.000 | -.3850 | -.3935 |

ALPHA ( 5) = 11.903 BETA ( 1) = -3.846 MACH = 1.1003 Q = 600.53 P = 708.60 RN/L = 3.1882

SECTION ( 1)BODY FLAP UPPER DEPENDENT VARIABLE CP

| X/LB | 1.0180 | 1.0460 |
|---|---|---|
| PHI | | |
| .000 | -.3933 | -.4018 |
| 40.000 | -.3980 | -.4009 |

ALPHA ( 5) = 11.911 BETA ( 2) = .188 MACH = 1.1003 Q = 600.53 P = 708.60 RN/L = 3.1882

SECTION ( 1)BODY FLAP UPPER DEPENDENT VARIABLE CP

| X/LB | 1.0180 | 1.0460 |
|---|---|---|
| PHI | | |
| .000 | -.3920 | -.4024 |
| 40.000 | -.3951 | -.3994 |

AMES 11-073(OA148) -140A/B/C/R ORB BODY FLAP UP (XEBF20)

ALPHA ( 5) = 11.905 BETA ( 3) = 4.263 MACH = 1.1003 Q = 600.53 P = 709.60 RN/L = 3.1882

SECTION ( 1)BODY FLAP UPPER DEPENDENT VARIABLE CP

| X/LB | 1.0180 | 1.0460 |
|---|---|---|
| PHI | | |
| .000 | -.3931 | -.4071 |
| 40.000 | -.3929 | -.3995 |

AMES 11-073(OA148) -140A/B/C/R ORB BODY FLAP UP (XEBF21) ( 05 AUG 75 )

REFERENCE DATA

SREF = 2690.0000 SQ.FT. XMRP = 1076.6900 IN. XO
LREF = 474.3000 IN. YMRP = .0000 IN. YO
BREF = 936.0680 IN ZMRP = 375.0000 IN. ZO
SCALE = .0300

PARAMETRIC DATA

RUDDER = .000 SPOBRK = .000
BDFLAP = -11.700 L-ELVN = .000
R-ELVN = .000 MACH = .900

ALPHA ( 1) = -4.037 BETA ( 1) = -3.849 MACH = .90000 Q = 600.22 P = 1058.5 RN/L = 3.5693

SECTION ( 1)BODY FLAP UPPER DEPENDENT VARIABLE CP

| X/LB | 1.0180 | 1.0460 |
|---|---|---|
| PHI | | |
| .000 | -.2905 | -.2699 |
| 40.000 | -.2526 | -.2552 |

ALPHA ( 1) = -4.030 BETA ( 2) = .192 MACH = .90000 Q = 600.22 P = 1058.5 RN/L = 3.5693

SECTION ( 1)BODY FLAP UPPER DEPENDENT VARIABLE CP

| X/LB | 1.0180 | 1.0460 |
|---|---|---|
| PHI | | |
| .000 | -.2902 | -.2774 |
| 40.000 | -.2560 | -.2593 |

ALPHA ( 1) = -4.042 BETA ( 3) = 4.289 MACH = .90000 Q = 600.22 P = 1058.5 RN/L = 3.5693

SECTION ( 1)BODY FLAP UPPER DEPENDENT VARIABLE CP

| X/LB | 1.0180 | 1.0460 |
|---|---|---|
| PHI | | |
| .000 | -.2886 | -.2910 |
| 40.000 | -.2703 | -.2936 |

ALPHA ( 2) = .024 BETA ( 1) = -3.875 MACH = .89917 Q = 599.08 P = 1058.5 RN/L = 3.5662

SECTION ( 1)BODY FLAP UPPER DEPENDENT VARIABLE CP

| X/LB | 1.0180 | 1.0460 |
|---|---|---|
| PHI | | |
| .000 | -.2793 | -.2765 |
| 40.000 | -.2574 | -.2694 |

AMES 11-073(OA148) -140A/B/C/R ORB BODY FLAP UP (XEBF2)

ALPHA ( 2) = .031 BETA ( 2) = .186 MACH = .89917 Q = 599.08 P = 1058.5 RN/L = 3.5582

SECTION ( 1)BODY FLAP UPPER DEPENDENT VARIABLE CP

| X/LB | 1.0180 | 1.0460 |
|---|---|---|
| PHI | | |
| .000 | -.2760 | -.2701 |
| 40.000 | -.2499 | -.2565 |

ALPHA ( 2) = .021 BETA ( 3) = 4.265 MACH = .89917 Q = 599.08 P = 1058.5 RN/L = 3.5582

SECTION ( 1)BODY FLAP UPPER DEPENDENT VARIABLE CP

| X/LB | 1.0180 | 1.0460 |
|---|---|---|
| PHI | | |
| .000 | -.2394 | -.2752 |
| 40.000 | -.2489 | -.2558 |

ALPHA ( 3) = 3.922 BETA ( 1) = -3.878 MACH = .89950 Q = 599.38 P = 1058.3 RN/L = 3.5582

SECTION ( 1)BODY FLAP UPPER DEPENDENT VARIABLE CP

| X/LB | 1.0180 | 1.0460 |
|---|---|---|
| PHI | | |
| .000 | -.2529 | -.2467 |
| 40.000 | -.2353 | -.2476 |

ALPHA ( 3) = 3.975 BETA ( 2) = .198 MACH = .89950 Q = 599.38 P = 1058.3 RN/L = 3.5582

SECTION ( 1)BODY FLAP UPPER DEPENDENT VARIABLE CP

| X/LB | 1.0180 | 1.0460 |
|---|---|---|
| PHI | | |
| .000 | -.2615 | -.2505 |
| 40.000 | -.2290 | -.2420 |

ALPHA ( 3) = 3.972 BETA ( 3) = 4.260 MACH = .89950 Q = 599.38 P = 1058.3 RN/L = 3.5582

SECTION ( 1)BODY FLAP UPPER DEPENDENT VARIABLE CP

| X/LB | 1.0180 | 1.0460 |
|---|---|---|
| PHI | | |
| .000 | -.2434 | -.2701 |
| 40.000 | -.2515 | -.2499 |

ORIGINAL PAGE IS
OF POOR QUALITY



AMES 11-073(OA148) -140A/B/C/R ORB BODY FLAP UP (XE8F21)

ALPHA ( 4) = 7.906 BETA ( 1) = -3.870 MACH = .89943 Q = 599.41 P = 1058.5 RN/L = 3.5684

SECTION ( 1)BODY FLAP UPPER DEPENDENT VARIABLE CP

| X/LB | 1.0180 | 1.0460 |
|---|---|---|
| PHI | | |
| .000 | -.2563 | -.2542 |
| 40.000 | -.2232 | -.2430 |

ALPHA ( 4) = 8.017 BETA ( 2) = .186 MACH = .99943 Q = 599.41 P = 1058.5 RN/L = 3.5684

SECTION ( 1)BODY FLAP UPPER DEPENDENT VARIABLE CP

| X/LB | 1.0180 | 1.0460 |
|---|---|---|
| PHI | | |
| .000 | -.2501 | -.2444 |
| 40.000 | -.2290 | -.2309 |

ALPHA ( 4) = 5.014 BETA ( 3) = 4.257 MACH = .89943 Q = 599.41 P = 1058.5 RN/L = 3.5684

SECTION ( 1)BODY FLAP UPPER DEPENDENT VARIABLE CP

| X/LB | 1.0180 | 1.0460 |
|---|---|---|
| PHI | | |
| .000 | -.2262 | -.2678 |
| 40.000 | -.2422 | -.2431 |

ALPHA ( 5) = 11.899 BETA ( 1) = -3.861 MACH = .90017 Q = 600.39 P = 1058.5 RN/L = 3.5727

SECTION ( 1)BODY FLAP UPPER DEPENDENT VARIABLE CP

| X/LB | 1.0180 | 1.0460 |
|---|---|---|
| PHI | | |
| .000 | -.2590 | -.2724 |
| 40.000 | -.2503 | -.2629 |

ALPHA ( 5) = 11.955 BETA ( 2) = .190 MACH = .90017 Q = 600.39 P = 1058.5 RN/L = 3.5727

SECTION ( 1)BODY FLAP UPPER DEPENDENT VARIABLE CP

| X/LB | 1.0180 | 1.0460 |
|---|---|---|
| PHI | | |
| .000 | -.2656 | -.2830 |
| 40.000 | -.2585 | -.2568 |

AMES 11-073(OA148) -140A/B/C/R ORB BODY FLAP UP (XEBF21)

ALPHA ( 5. = 11.946 BETA ( 3) = 4.274 MACH = .90017 Q = 600.39 P = 1058.5 RN/L = 3.5727

SECTION ( 1)BODY FLAP UPPER DEPENDENT VARIABLE CP

| X/LB | 1.0180 | 1.0460 |
|---|---|---|
| PHI | | |
| .000 | -.2352 | -.2849 |
| 40.000 | -.2608 | -.2706 |

AMES 11-073(OA148) -140A/B/C/R ORB BODY FLAP UP (XE8F22) ( 05 AUG 75 )

REFERENCE DATA

SREF = 2690.0000 SQ.FT. XMRP = 1076.6800 IN. XO
LREF = 474.5000 IN. YMRP = .0000 IN. YO
BREF = 935.0880 IN. ZMRP = 375.0000 IN. ZO
SCALE = .0300

PARAMETRIC DATA

RUDDER = .000 SPDBRK = .000
BDFLAP = -11.700 L-ELVN = .000
R-ELVN = .000 MACH = .600

ALPHA ( 1) = -4.045 BETA ( 1) = -7.856 MACH = .59680 Q = 594.79 P = 2385.6 RN/L = 4.8530

SECTION ( 1)BODY FLAP UPPER DEPENDENT VARIABLE CP

| X/LB | 1.0180 | 1.0460 |
|---|---|---|
| PHI | | |
| .000 | -.2478 | -.2897 |
| 40.000 | -.2537 | -.2715 |

ALPHA ( 1) = -3.970 BETA ( 2) = -3.843 MACH = .59680 Q = 594.79 P = 2385.6 RN/L = 4.8530

SECTION ( 1)BODY FLAP UPPER DEPENDENT VARIABLE CP

| X/LB | 1.0180 | 1.0460 |
|---|---|---|
| PHI | | |
| .000 | -.2803 | -.2730 |
| 40.000 | -.2460 | -.2633 |

ALPHA ( 1) = -3.957 BETA ( 3) = .189 MACH = .59680 Q = 594.79 P = 2385.6 RN/L = 4.8530

SECTION ( 1)BODY FLAP UPPER DEPENDENT VARIABLE CP

| X/LB | 1.0180 | 1.0460 |
|---|---|---|
| PHI | | |
| .000 | -.2763 | -.2652 |
| 40.000 | -.2455 | -.2576 |

ALPHA ( 1) = -3.955 BETA ( 4) = 4.271 MACH = .59680 Q = 594.79 P = 2385.6 RN/L = 4.8530

SECTION ( 1)BODY FLAP UPPER DEPENDENT VARIABLE CP

| X/LB | 1.0180 | 1.0460 |
|---|---|---|
| PHI | | |
| .000 | -.2656 | -.2768 |
| 40.000 | -.2609 | -.2675 |

AMES 11-073(OA148) -140A/B/C/R ORB BODY FLAP UP (XE8F22)

ALPHA ( 1) = -4.005 BETA ( 5) = 8.350 MACH = .59680 Q = 594.79 P = 2385.6 RN/L = 4.8530

SECTION ( 1)BODY FLAP UPPER DEPENDENT VARIABLE CP

| X/LB | 1.0180 | 1.0460 |
|---|---|---|
| PHI | | |
| .000 | -.2827 | -.2896 |
| 40.000 | -.2618 | -.2820 |

ALPHA ( 2) = -.025 BETA ( 1) = -7.896 MACH = .59678 Q = 594.66 P = 2385.3 RN/L = 4.8568

SECTION ( 1)BODY FLAP UPPER DEPENDENT VARIABLE CP

| X/LB | 1.0180 | 1.0460 |
|---|---|---|
| PHI | | |
| .000 | -.2451 | -.2848 |
| 40.000 | -.2463 | -.2618 |

ALPHA ( 2) = -.014 BETA ( 2) = -3.863 MACH = .59678 Q = 594.66 P = 2385.3 RN/L = 4.8568

SECTION ( 1)BODY FLAP UPPER DEPENDENT VARIABLE CP

| X/LB | 1.0180 | 1.0460 |
|---|---|---|
| PHI | | |
| .000 | -.2788 | -.2638 |
| 40.000 | -.2449 | -.2543 |

ALPHA ( 2) = .070 BETA ( 3) = .189 MACH = .59678 Q = 594.66 P = 2385.3 RN/L = 4.8568

SECTION ( 1)BODY FLAP UPPER DEPENDENT VARIABLE CP

| X/LB | 1.0180 | 1.0460 |
|---|---|---|
| PHI | | |
| .000 | -.2525 | -.2597 |
| 40.000 | -.2392 | -.2495 |

ALPHA ( 2) = .063 BETA ( 4) = 4.250 MACH = .59678 Q = 594.66 P = 2385.3 RN/L = 4.8568

SECTION ( 1)BODY FLAP UPPER DEPENDENT VARIABLE CP

| X/LB | 1.0180 | 1.0460 |
|---|---|---|
| PHI | | |
| .000 | -.2548 | -.2647 |
| 40.000 | -.2462 | -.2602 |

AMES 11-073(OA148) -140A/B/C/R ORB BODY FLAP UP (XE8F22)

ALPHA ( 2) = .058 BETA ( 5) = 8.310 MACH = .59678 Q = 594.66 P = 2385.3 RN/L = 4.8568

SECTION ( 1)BODY FLAP UPPER DEPENDENT VARIABLE CP

| X/LB | 1.0180 | 1.0460 |
|---|---|---|
| PHI | | |
| .000 | -.2744 | -.2768 |
| 40.000 | -.2552 | -.2647 |

ALPHA ( 3) = 3.933 BETA ( 1) = -7.911 MACH = .59760 Q = 596.20 P = 2385.0 RN/L = 4.8680

SECTION ( 1)BODY FLAP UPPER DEPENDENT VARIABLE CP

| X/LB | 1.0180 | 1.0460 |
|---|---|---|
| PHI | | |
| .000 | -.2513 | -.2894 |
| 40.000 | -.2414 | -.2615 |

ALPHA ( 3) = 3.936 BETA ( 2) = -3.866 MACH = .59760 Q = 596.20 P = 2385.0 RN/L = 4.8680

SECTION ( 1)BODY FLAP UPPER DEPENDENT VARIABLE CP

| X/LB | 1.0180 | 1.0460 |
|---|---|---|
| PHI | | |
| .000 | -.2816 | -.2601 |
| 40.000 | -.2404 | -.2485 |

ALPHA ( 3) = 3.935 BETA ( 3) = .172 MACH = .59760 Q = 596.20 P = 2385.0 RN/L = 4.8680

SECTION ( 1)BODY FLAP UPPER DEPENDENT VARIABLE CP

| X/LB | 1.0180 | 1.0460 |
|---|---|---|
| PHI | | |
| .000 | -.2568 | -.2516 |
| 40.000 | -.2336 | -.2369 |

ALPHA ( 3) = 4.026 BETA ( 4) = 4.240 MACH = .59760 Q = 596.20 P = 2385.0 RN/L = 4.8680

SECTION ( 1)BODY FLAP UPPER DEPENDENT VARIABLE CP

| X/LB | 1.0180 | 1.0460 |
|---|---|---|
| PHI | | |
| .000 | -.2605 | -.2593 |
| 40.000 | -.2370 | -.2467 |

AMES 11-073(OA148) -140A/B/C/R ORB BODY FLAP UP (XEBF22)

ALPHA ( 3) = 4.030 BETA ( 5) = 8.292 MACH = .59760 Q = 596.20 P = 2385.0 RN/L = 4.8680

SECTION ( 1)BODY FLAP UPPER DEPENDENT VARIABLE CP

| X/LB | 1.0180 | 1.0460 |
|---|---|---|
| PHI | | |
| .000 | -.2846 | -.2671 |
| 40.000 | -.2503 | -.2505 |

ALPHA ( 4) = 7.901 BETA ( 1) = -7.896 MACH = .59758 Q = 596.20 P = 2385.1 RN/L = 4.8692

SECTION ( 1)BODY FLAP UPPER DEPENDENT VARIABLE CP

| X/LB | 1.0180 | 1.0460 |
|---|---|---|
| PHI | | |
| .000 | -.2683 | -.2899 |
| 40.000 | -.2427 | -.2662 |

ALPHA ( 4) = 7.913 BETA ( 2) = -3.861 MACH = .59758 Q = 596.20 P = 2385.1 RN/L = 4.8692

SECTION ( 1)BODY FLAP UPPER DEPENDENT VARIABLE CP

| X/LB | 1.0180 | 1.0460 |
|---|---|---|
| PHI | | |
| .000 | -.2575 | -.2523 |
| 40.000 | -.2255 | -.2412 |

ALPHA ( 4) = 8.049 BETA ( 3) = .175 MACH = .59758 Q = 596.20 P = 2385.1 RN/L = 4.8692

SECTION ( 1)BODY FLAP UPPER DEPENDENT VARIABLE CP

| X/LB | 1.0180 | 1.0460 |
|---|---|---|
| PHI | | |
| .000 | -.2364 | -.2471 |
| 40.000 | -.2220 | -.2383 |

ALPHA ( 4) = 8.049 BETA ( 4) = 4.238 MACH = .59758 Q = 596.20 P = 2385.1 RN/L = 4.8692

SECTION ( 1)BODY FLAP UPPER DEPENDENT VARIABLE CP

| X/LB | 1.0180 | 1.0460 |
|---|---|---|
| PHI | | |
| .000 | -.2550 | -.2555 |
| 40.000 | -.2280 | -.2394 |

AMES 11-073(OA148) -140A/B/C/R ORB BODY FLAP UP (XE8F22)

ALPHA ( 4) = 8.046 BETA ( 5) = 8.297 MACH = .59758 Q = 596.20 P = 2385.1 RN/L = 4.8692

SECTION ( 1)BODY FLAP UPPER DEPENDENT VARIABLE CP

| X/LB | 1.0180 | 1.0460 |
|---|---|---|
| PHI | | |
| .000 | -.2825 | -.2685 |
| 40.000 | -.2415 | -.2534 |

ALPHA ( 5) = 11.963 BETA ( 1) = -7.860 MACH = .59774 Q = 596.43 P = 2384.9 RN/L = 4.8734

SECTION ( 1)BODY FLAP UPPER DEPENDENT VARIABLE CP

| X/LB | 1.0180 | 1.0460 |
|---|---|---|
| PHI | | |
| .000 | -.2813 | -.2709 |
| 40.000 | -.2387 | -.2493 |

ALPHA ( 5) = 11.995 BETA ( 2) = -3.840 MACH = .59774 Q = 596.43 P = 2384.9 RN/L = 4.8734

SECTION ( 1)BODY FLAP UPPER DEPENDENT VARIABLE CP

| X/LB | 1.0180 | 1.0460 |
|---|---|---|
| PHI | | |
| .000 | -.2729 | -.2556 |
| 40.000 | -.2315 | -.2433 |

ALPHA ( 5) = 12.000 BETA ( 3) = .181 MACH = .59774 Q = 596.43 P = 2384.9 RN/L = 4.8734

SECTION ( 1)BODY FLAP UPPER DEPENDENT VARIABLE CP

| X/LB | 1.0180 | 1.0460 |
|---|---|---|
| PHI | | |
| .000 | -.2510 | -.2446 |
| 40.000 | -.2259 | -.2285 |

ALPHA ( 5) = 12.027 BETA ( 4) = 4.252 MACH = .59774 Q = 596.43 P = 2384.9 RN/L = 4.8734

SECTION ( 1)BODY FLAP UPPER DEPENDENT VARIABLE CP

| X/LB | 1.0180 | 1.0460 |
|---|---|---|
| PHI | | |
| .000 | -.2524 | -.2638 |
| 40.000 | -.2309 | -.2425 |

ORIGINAL PAGE IS
OF POOR QUALITY

AMES 11-073(OA148) -140A/B/C/R ORB BODY FLAP UP (XE8F22)

ALPHA ( 5) = 12.070 BETA ( 5) = 8.324 MACH = .59774 Q = 596.43 P = 2384.9 RN/L = 4.8734

SECTION ( 1)BODY FLAP UPPER DEPENDENT VARIABLE CP

| X/LB | 1.0180 | 1.0460 |
|---|---|---|
| PHI | | |
| .000 | -.2901 | -.2849 |
| 40.000 | -.2560 | -.2676 |

AMES 11-073(OA148) -140A/B/C/R ORB BODY FLAP UP (XE8F23) ( 05 AUG 75 )

REFERENCE DATA

SREF = 2690.0000 SQ.FT. XMRP = 1076.6800 IN. XO
LREF = 474.8000 IN. YMRP = .0000 IN. YO
BREF = 935.0000 IN. ZMRP = 375.0000 IN. ZO
SCALE = .0200

PARAMETRIC DATA

RUDDER = .000 SPDBRK = .000
BDFLAP = .000 L-ELVN = .000
R-ELVN = .000 MACH = 1.400

ALPHA ( 1) = -3.999 BETA ( 1) = -3.856 MACH = 1.3924 Q = 598.36 P = 440.89 RN/L = 2.9021

SECTION ( 1)BODY FLAP UPPER DEPENDENT VARIABLE CP

| X/LB | 1.0180 | 1.0460 |
|---|---|---|
| PHI | | |
| .000 | -.3185 | -.3244 |
| 40.000 | -.3406 | -.3547 |

ALPHA ( 1) = -3.926 BETA ( 2) = .190 MACH = 1.3924 Q = 598.36 P = 440.89 RN/L = 2.9021

SECTION ( 1)BODY FLAP UPPER DEPENDENT VARIABLE CP

| X/LB | 1.0180 | 1.0460 |
|---|---|---|
| PHI | | |
| .000 | -.3134 | -.3180 |
| 40.000 | -.3364 | -.3469 |

ALPHA ( 1) = -3.986 BETA ( 3) = 4.279 MACH = 1.3924 Q = 598.36 P = 440.89 RN/L = 2.9021

SECTION ( 1)BODY FLAP UPPER DEPENDENT VARIABLE CP

| X/LB | 1.0180 | 1.0460 |
|---|---|---|
| PHI | | |
| .000 | -.3190 | -.3209 |
| 40.000 | -.3368 | -.3475 |

ALPHA ( 2) = .006 BETA ( 1) = -3.877 MACH = 1.3947 Q = 599.32 P = 440.18 RN/L = 2.9066

SECTION ( 1)BODY FLAP UPPER DEPENDENT VARIABLE CP

| X/LB | 1.0180 | 1.0460 |
|---|---|---|
| PHI | | |
| .000 | -.3297 | -.3332 |
| 40.000 | -.3213 | -.3358 |

AMES 11-073(OA148) -140A/B/C/R ORB BODY FLAP UP (XEBF23)

ALPHA ( 2) = .011 BETA ( 2) = .183 MACH = 1.3947 Q = 599.32 P = 440.18 RN/L = 2.9066

SECTION ( 1)BODY FLAP UPPER DEPENDENT VARIABLE CP

| X/LB | 1.0180 | 1.0460 |
|---|---|---|
| PHI | | |
| .000 | -.3212 | -.3264 |
| 40.000 | -.3278 | -.3391 |

ALPHA ( 2) = .023 BETA ( 3) = 4.256 MACH = 1.3947 Q = 599.32 P = 440.18 RN/L = 2.9066

SECTION ( 1)BODY FLAP UPPER DEPENDENT VARIABLE CP

| X/LB | 1.0180 | 1.0460 |
|---|---|---|
| PHI | | |
| .000 | -.3189 | -.3281 |
| 40.000 | -.3323 | -.3414 |

ALPHA ( 3) = 3.926 BETA ( 1) = -3.879 MACH = 1.3946 Q = 599.62 P = 440.42 RN/L = 2.9033

SECTION ( 1)BODY FLAP UPPER DEPENDENT VARIABLE CP

| X/LB | 1.0180 | 1.0460 |
|---|---|---|
| PHI | | |
| .000 | -.3264 | -.3326 |
| 40.000 | -.3197 | -.3323 |

ALPHA ( 3) = 3.958 BETA ( 2) = .183 MACH = 1.3946 Q = 599.62 P = 440.42 RN/L = 2.9033

SECTION ( 1)BODY FLAP UPPER DEPENDENT VARIABLE CP

| X/LB | 1.0180 | 1.0460 |
|---|---|---|
| PHI | | |
| .000 | -.3146 | -.3193 |
| 40.000 | -.3196 | -.3217 |

ALPHA ( 3) = 3.971 BETA ( 3) = 4.247 MACH = 1.3946 Q = 599.62 P = 440.42 RN/L = 2.9033

SECTION ( 1)BODY FLAP UPPER DEPENDENT VARIABLE CP

| X/LB | 1.0180 | 1.0460 |
|---|---|---|
| PHI | | |
| .000 | -.3177 | -.3227 |
| 40.000 | -.3282 | -.3308 |

AMES 11-073(OA148) -140A/B/C/R ORB BODY FLAP UP (XE8F23)

ALPHA ( 4) = 7.933 BETA ( 1) = -3.869 MACH = 1.3941 Q = 599.51 P = 440.65 RN/L = 2.9093

SECTION ( 1)BODY FLAP UPPER DEPENDENT VARIABLE CP

| X/LB | 1.0180 | 1.0460 |
|---|---|---|
| PHI | | |
| .000 | -.3364 | -.3435 |
| 40.000 | -.3318 | -.3428 |

ALPHA ( 4) = 7.908 BETA ( 2) = .178 MACH = 1.3941 Q = 599.51 P = 440.65 RN/L = 2.9093

SECTION ( 1)BODY FLAP UPPER DEPENDENT VARIABLE CP

| X/LB | 1.0180 | 1.0460 |
|---|---|---|
| PHI | | |
| .000 | -.3224 | -.3299 |
| 40.000 | -.3251 | -.3315 |

ALPHA ( 4) = 7.872 BETA ( 3) = 4.245 MACH = 1.3941 Q = 599.51 P = 440.65 RN/L = 2.9093

SECTION ( 1)BODY FLAP UPPER DEPENDENT VARIABLE CP

| X/LB | 1.0180 | 1.0460 |
|---|---|---|
| PHI | | |
| .000 | -.3248 | -.3315 |
| 40.000 | -.3382 | -.3408 |

ALPHA ( 5) = 11.931 BETA ( 1) = -3.857 MACH = 1.3942 Q = 599.92 P = 440.89 RN/L = 2.9149

SECTION ( 1)BODY FLAP UPPER DEPENDENT VARIABLE CP

| X/LB | 1.0180 | 1.0460 |
|---|---|---|
| PHI | | |
| .000 | -.3446 | -.3529 |
| 40.000 | -.3391 | -.3272 |

ALPHA ( 5) = 11.869 BETA ( 2) = .183 MACH = 1.3942 Q = 599.92 P = 440.89 RN/L = 2.9149

SECTION ( 1)BODY FLAP UPPER DEPENDENT VARIABLE CP

| X/LB | 1.0180 | 1.0460 |
|---|---|---|
| PHI | | |
| .000 | -.3392 | -.3455 |
| 40.000 | -.3416 | -.3534 |

AMES 11-073(OA148) -140A/B/C/R ORB BODY FLAP UP (XE8F23)

ALPHA ( 5) = 11.855 BETA ( 3) = 4.258 MACH = 1.3942 Q = 599.92 P = 440.89 RN/L = 2.9149

SECTION ( 1)BODY FLAP UPPER DEPENDENT VARIABLE CP

| X/LB | 1.0180 | 1.0460 |
|---|---|---|
| PHI | | |
| .000 | -.3394 | -.3363 |
| 40.000 | -.3586 | -.3634 |

ALPHA ( 6) = 15.857 BETA ( 1) = -3.836 MACH = 1.3942 Q = 599.51 P = 440.65 RN/L = 2.9096

SECTION ( 1)BODY FLAP UPPER DEPENDENT VARIABLE CP

| X/LB | 1.0180 | 1.0460 |
|---|---|---|
| PHI | | |
| .000 | -.3670 | -.3653 |
| 40.000 | -.3342 | -.3416 |

ALPHA ( 6) = 15.871 BETA ( 2) = .184 MACH = 1.3942 Q = 599.51 P = 440.65 RN/L = 2.9096

SECTION ( 1)BODY FLAP UPPER DEPENDENT VARIABLE CP

| X/LB | 1.0180 | 1.0460 |
|---|---|---|
| PHI | | |
| .000 | -.3530 | -.3463 |
| 40.000 | -.3760 | -.3922 |

ALPHA ( 6) = 15.861 BETA ( 3) = 4.289 MACH = 1.3942 Q = 599.51 P = 440.65 RN/L = 2.9096

SECTION ( 1)BODY FLAP UPPER DEPENDENT VARIABLE CP

| X/LB | 1.0180 | 1.0460 |
|---|---|---|
| PHI | | |
| .000 | -.3683 | -.3700 |
| 40.000 | -.3800 | -.3860 |

AMES 11-073(OA148) -140A/B/C/R ORB BODY FLAP UP (XEBF24) ( 05 AUG 75 )

REFERENCE DATA

SREF = 2690.0000 SQ.FT. XMRP = 1070.6800 IN. XO
LREF = 474.8000 IN. YMRP = .0000 IN. YO
BREF = 935.0000 IN. ZMRP = 375.0000 IN. ZO
SCALE = .0300

PARAMETRIC DATA

RUDDER = .000 SPDBRK = .000
BDFLAP = .000 L-ELVN = .000
R-ELVN = .000 MACH = 1.250

ALPHA ( 1) = -3.982 BETA ( 1) = -3.844 MACH = 1.2469 Q = 599.78 P = 551.11 RN/L = 3.0086

SECTION ( 1)BODY FLAP UPPER DEPENDENT VARIABLE CP

| X/LB | 1.0180 | 1.0460 |
|---|---|---|
| PHI | | |
| .000 | -.3419 | -.3507 |
| 40.000 | -.3535 | -.3821 |

ALPHA ( 1) = -3.977 BETA ( 2) = .190 MACH = 1.2469 Q = 599.78 P = 551.11 RN/L = 3.0086

SECTION ( 1)BODY FLAP UPPER DEPENDENT VARIABLE CP

| X/LB | 1.0180 | 1.0460 |
|---|---|---|
| PHI | | |
| .000 | -.3413 | -.3459 |
| 40.000 | -.3587 | -.3713 |

ALPHA ( 1) = -3.980 BETA ( 3) = 4.277 MACH = 1.2469 Q = 599.78 P = 551.11 RN/L = 3.0086

SECTION ( 1)BODY FLAP UPPER DEPENDENT VARIABLE CP

| X/LB | 1.0180 | 1.0460 |
|---|---|---|
| PHI | | |
| .000 | -.3460 | -.3594 |
| 40.000 | -.3510 | -.3759 |

ALPHA ( 2) = .038 BETA ( 1) = -3.875 MACH = 1.2468 Q = 599.96 P = 551.34 RN/L = 3.0225

SECTION ( 1)BODY FLAP UPPER DEPENDENT VARIABLE CP

| X/LB | 1.0180 | 1.0460 |
|---|---|---|
| PHI | | |
| .000 | -.3477 | -.3553 |
| 40.000 | -.3443 | -.3586 |

AMES 11-073(OA148) -140A/B/C/R ORB BODY FLAP UP (XEBF24)

ALPHA ( 2) = .042 BETA ( 2) = .180 MACH = 1.2468 Q = 599.95 P = 551.34 RN/L = 3.0225

SECTION ( 1)BODY FLAP UPPER DEPENDENT VARIABLE CP

| X/LB | 1.0180 | 1.0460 |
|---|---|---|
| PHI | | |
| .000 | -.3392 | -.3477 |
| 40.000 | -.3434 | -.3570 |

ALPHA ( 2) = .044 BETA ( 3) = 4.251 MACH = 1.2468 Q = 599.96 P = 551.34 RN/L = 3.0225

SECTION ( 1)BODY FLAP UPPER DEPENDENT VARIABLE CP

| X/LB | 1.0180 | 1.0460 |
|---|---|---|
| PHI | | |
| .000 | -.3440 | -.3539 |
| 40.000 | -.3613 | -.3710 |

ALPHA ( 3) = 3.904 BETA ( 1) = -3.972 MACH = 1.2475 Q = 600.37 P = 551.11 RN/L = 3.0117

SECTION ( 1)BODY FLAP UPPER DEPENDENT VARIABLE CP

| X/LB | 1.0180 | 1.0460 |
|---|---|---|
| PHI | | |
| .000 | -.3525 | -.3579 |
| 40.000 | -.3496 | -.3577 |

ALPHA ( 3) = 3.905 BETA ( 2) = .182 MACH = 1.2475 Q = 600.37 P = 551.11 RN/L = 3.0117

SECTION ( 1)BODY FLAP UPPER DEPENDENT VARIABLE CP

| X/LB | 1.0180 | 1.0460 |
|---|---|---|
| PHI | | |
| .000 | -.3471 | -.3573 |
| 40.000 | -.3502 | -.3594 |

ALPHA ( 3) = 3.915 BETA ( 3) = 4.245 MACH = 1.2475 Q = 600.37 P = 551.11 RN/L = 3.0117

SECTION ( 1)BODY FLAP UPPER DEPENDENT VARIABLE CP

| X/LB | 1.0180 | 1.0460 |
|---|---|---|
| PHI | | |
| .000 | -.3515 | -.3517 |
| 40.000 | -.3560 | -.3683 |

AMES 11-073(OA148) -140A/B/C/R ORB BODY FLAP UP (XE8F24)

ALPHA ( 4) = 7.877 BETA ( 1) = -3.867 MACH = 1.2474 Q = 600.25 P = 551.11 RN/L = 3.0132

SECTION ( 1)BODY FLAP UPPER DEPENDENT VARIABLE CP

| X/LB | 1.0180 | 1.0460 |
|---|---|---|
| PHI | | |
| .000 | -.3595 | -.3742 |
| 40.000 | -.3607 | -.3733 |

ALPHA ( 4) = 7.882 BETA ( 2) = .178 MACH = 1.2474 Q = 600.25 P = 551.11 RN/L = 3.0132

SECTION ( 1)BODY FLAP UPPER DEPENDENT VARIABLE CP

| X/LB | 1.0180 | 1.0460 |
|---|---|---|
| PHI | | |
| .000 | -.3552 | -.3611 |
| 40.000 | -.3571 | -.3673 |

ALPHA ( 4) = 7.892 BETA ( 3) = 4.244 MACH = 1.2474 Q = 600.25 P = 551.11 RN/L = 3.0132

SECTION ( 1)BODY FLAP UPPER DEPENDENT VARIABLE CP

| X/LB | 1.0180 | 1.0460 |
|---|---|---|
| PHI | | |
| .000 | -.3596 | -.3660 |
| 40.000 | -.3740 | -.3797 |

ALPHA ( 5) = 11.916 BETA ( 1) = -3.850 MACH = 1.2463 Q = 600.28 P = 552.05 RN/L = 3.0160

SECTION ( 1)BODY FLAP UPPER DEPENDENT VARIABLE CP

| X/LB | 1.0180 | 1.0460 |
|---|---|---|
| PHI | | |
| .000 | -.3769 | -.3926 |
| 40.000 | -.3729 | -.3806 |

ALPHA ( 5) = 11.922 BETA ( 2) = .186 MACH = 1.2463 Q = 600.28 P = 552.05 RN/L = 3.0160

SECTION ( 1)BODY FLAP UPPER DEPENDENT VARIABLE CP

| X/LB | 1.0180 | 1.0460 |
|---|---|---|
| PHI | | |
| .000 | -.3662 | -.3757 |
| 40.000 | -.3778 | -.3925 |

AMES 11-073(OA148) -140A/B/C/R ORB BODY FLAP UP (XEBF24)

ALPHA ( 5) = 11.922 BETA ( 3) = 4.256 MACH = 1.2463 Q = 600.28 P = 552.05 RN/L = 3.0160

SECTION ( 1:BODY FLAP UPPER DEPENDENT VARIABLE CP

| X/LB | 1.0180 | 1.0460 |
|---|---|---|
| PHI | | |
| .000 | -.3842 | -.3871 |
| 40.000 | -.3787 | -.3799 |

AMES 11-073(OA148) -140A/B/C/R ORB BODY FLAP UP (XEBF25) ( 05 AUG 75 )

REFERENCE DATA

SREF = 2690.0000 SQ.FT. XMRP = 1076.6800 IN. XO
LREF = 474.8000 IN. YMRP = .0000 IN. YO
BREF = 936.0680 IN. ZMRP = 375.0000 IN. ZO
SCALE = .0300

PARAMETRIC DATA

RUDDER = .000 SPDBRK = .000
BDFLAP = .000 L-ELVN = .000
R-ELVN = .000 MACH = 1.100

ALPHA ( 1) = -3.988 BETA ( 1) = -3.842 MACH = 1.0978 Q = 600.10 P = 711.43 RN/L = 3.1881

SECTION ( 1)BODY FLAP UPPER DEPENDENT VARIABLE CP

| X/LB | 1.0180 | 1.0460 |
|---|---|---|
| PHI | | |
| .000 | -.3812 | -.3911 |
| 40.000 | -.3947 | -.3997 |

ALPHA ( 1) = -3.982 BETA ( 2) = .191 MACH = 1.0978 Q = 600.10 P = 711.43 RN/L = 3.1881

SECTION ( 1)BODY FLAP UPPER DEPENDENT VARIABLE CP

| X/LB | 1.0180 | 1.0460 |
|---|---|---|
| PHI | | |
| .000 | -.3784 | -.3844 |
| 40.000 | -.3777 | -.3910 |

ALPHA ( 1) = -3.997 BETA ( 3) = 4.273 MACH = 1.0978 Q = 600.10 P = 711.43 RN/L = 3.1881

SECTION ( 1)BODY FLAP UPPER DEPENDENT VARIABLE CP

| X/LB | 1.0180 | 1.0460 |
|---|---|---|
| PHI | | |
| .000 | -.3932 | -.3979 |
| 40.000 | -.3858 | -.3958 |

ALPHA ( 2) = .056 BETA ( 1) = -3.867 MACH = 1.0980 Q = 599.15 P = 710.01 RN/L = 3.1813

SECTION ( 1)BODY FLAP UPPER DEPENDENT VARIABLE CP

| X/LB | 1.0180 | 1.0460 |
|---|---|---|
| PHI | | |
| .000 | -.3594 | -.3723 |
| 40.000 | -.3730 | -.3763 |

ORIGINAL PAGE IS
OF POOR QUALITY

AMES 11-073(OA148) -140A/B/C/R ORB BODY FLAP UP (XE8F25)

ALPHA ( 2) = .058 BETA ( 2) = .181 MACH = 1.0980 Q = 599.15 P = 710.01 RN/L = 3.1813

SECTION ( 1)BODY FLAP UPPER DEPENDENT VARIABLE CP

| X/LB | 1.0180 | 1.0460 |
|---|---|---|
| PHI | | |
| .000 | -.3669 | -.3778 |
| 40.000 | -.3654 | -.3778 |

ALPHA ( 2) = .056 BETA ( 3) = 4.249 MACH = 1.0980 Q = 599.15 P = 710.01 RN/L = 3.1813

SECTION ( 1)BODY FLAP UPPER DEPENDENT VARIABLE CP

| X/LB | 1.0180 | 1.0460 |
|---|---|---|
| PHI | | |
| .000 | -.3757 | -.3840 |
| 40.000 | -.3662 | -.3830 |

ALPHA ( 3) = 3.948 BETA ( 1) = -3.871 MACH = 1.0978 Q = 599.38 P = 710.48 RN/L = 3.1840

SECTION ( 1)BODY FLAP UPPER DEPENDENT VARIABLE CP

| X/LB | 1.0180 | 1.0460 |
|---|---|---|
| PHI | | |
| .000 | -.3775 | -.3980 |
| 40.000 | -.3727 | -.3939 |

ALPHA ( 3) = 3.948 BETA ( 2) = .177 MACH = 1.0978 Q = 599.38 P = 710.48 RN/L = 3.1840

SECTION ( 1)BODY FLAP UPPER DEPENDENT VARIABLE CP

| X/LB | 1.0180 | 1.0460 |
|---|---|---|
| PHI | | |
| .000 | -.3705 | -.3815 |
| 40.000 | -.3651 | -.3812 |

ALPHA ( 3) = 3.950 BETA ( 3) = 4.239 MACH = 1.0978 Q = 599.38 P = 710.48 RN/L = 3.1840

SECTION ( 1)BODY FLAP UPPER DEPENDENT VARIABLE CP

| X/LB | 1.0180 | 1.0460 |
|---|---|---|
| PHI | | |
| .000 | -.3782 | -.3834 |
| 40.000 | -.3744 | -.3887 |

AMES 11-073(OA148) -140A/B/C/R ORB BODY FLAP UP (XE8F25)

ALPHA ( 4) = 7.932 BETA ( 1) = -3.857 MACH = 1.0986 Q = 599.84 P = 710.01 RN/L = 3.1812

SECTION ( 1)BODY FLAP UPPER DEPENDENT VARIABLE CP

| X/LB | 1.0180 | 1.0460 |
|---|---|---|
| PHI | | |
| .000 | -.3904 | -.3977 |
| 40.000 | -.3804 | -.3909 |

ALPHA ( 4) = 7.938 BETA ( 2) = .185 MACH = 1.0986 Q = 599.84 P = 710.01 RN/L = 3.1812

SECTION ( 1)BODY FLAP UPPER DEPENDENT VARIABLE CP

| X/LB | 1.0180 | 1.0460 |
|---|---|---|
| PHI | | |
| .000 | -.3790 | -.3875 |
| 40.000 | -.3742 | -.3840 |

ALPHA ( 4) = 7.937 BETA ( 3) = 4.238 MACH = 1.0986 Q = 599.84 P = 710.01 RN/L = 3.1812

SECTION ( 1)BODY FLAP UPPER DEPENDENT VARIABLE CP

| X/LB | 1.0180 | 1.0460 |
|---|---|---|
| PHI | | |
| .000 | -.3850 | -.3964 |
| 40.000 | -.3940 | -.4088 |

ALPHA ( 5) = 11.970 BETA ( 1) = -3.845 MACH = 1.0981 Q = 599.46 P = 710.25 RN/L = 3.1817

SECTION ( 1)BODY FLAP UPPER DEPENDENT VARIABLE CP

| X/LB | 1.0180 | 1.0460 |
|---|---|---|
| PHI | | |
| .000 | -.3939 | -.3949 |
| 40.000 | -.3999 | -.3987 |

ALPHA ( 5) = 11.981 BETA ( 2) = .187 MACH = 1.0981 Q = 599.46 P = 710.25 RN/L = 3.1817

SECTION ( 1)BODY FLAP UPPER DEPENDENT VARIABLE CP

| X/LB | 1.0180 | 1.0460 |
|---|---|---|
| PHI | | |
| .000 | -.3940 | -.4026 |
| 40.000 | -.4004 | -.4023 |

AMES 11-073(OA148) -140A/B/C/R ORB BODY FLAP UP (XE8F25)

ALPHA ( 5) = 11.975 BETA ( 3) = 4.250 MACH = 1.0981 Q = 599.46 P = 710.25 RN/L = 3.1817

SECTION ( 1)BODY FLAP UPPER DEPENDENT VARIABLE CP

| X/LB | 1.0180 | 1.0460 |
|---|---|---|
| PHI | | |
| .000 | -.4060 | -.4124 |
| 40.000 | -.4079 | -.4110 |

AMES 11-073(OA148) -140A/B/C/R ORB BODY FLAP UP (XE8F26) ( 05 AUG 75 )

REFERENCE DATA

SREF = 2690.0000 SQ.FT. XMRP = 1076.6800 IN. XO
LREF = 474.8000 IN. YMRP = .0000 IN. YO
BREF = 935.0680 IN. ZMRP = 375.0000 IN. ZO
SCALE = .0300

PARAMETRIC DATA

RUDDER = .000 SPDBRK = .000
BDFLAP = .000 L-ELVN = .000
R-ELVN = .000 MACH = .900

ALPHA ( 1) = -3.986 BETA ( 1) = -3.845 MACH = .89940 Q = 599.79 P = 1059.2 RN/L = 3.5659

SECTION ( 1)BODY FLAP UPPER DEPENDENT VARIABLE CP

| X/LB | 1.0180 | 1.0460 |
|---|---|---|
| PHI | | |
| .000 | -.2330 | -.2397 |
| 40.000 | -.2364 | -.2414 |

ALPHA ( 1) = -3.977 BETA ( 2) = .190 MACH = .89940 Q = 599.79 P = 1059.2 RN/L = 3.5659

SECTION ( 1)BODY FLAP UPPER DEPENDENT VARIABLE CP

| X/LB | 1.0180 | 1.0460 |
|---|---|---|
| PHI | | |
| .000 | -.2341 | -.2522 |
| 40.000 | -.2379 | -.2615 |

ALPHA ( 1) = -3.985 BETA ( 3) = 4.276 MACH = .89940 Q = 599.79 P = 1059.2 RN/L = 3.5659

SECTION ( 1)BODY FLAP UPPER DEPENDENT VARIABLE CP

| X/LB | 1.0180 | 1.0460 |
|---|---|---|
| PHI | | |
| .000 | -.2336 | -.2493 |
| 40.000 | -.2516 | -.2682 |

ALPHA ( 2) = .061 BETA ( 1) = -3.869 MACH = .89877 Q = 599.18 P = 1059.7 RN/L = 3.5651

SECTION ( 1)BODY FLAP UPPER DEPENDENT VARIABLE CP

| X/LB | 1.0180 | 1.0460 |
|---|---|---|
| PHI | | |
| .000 | -.2359 | -.2550 |
| 40.000 | -.2364 | -.2510 |

AMES 11-073(OA148) -140A/B/C/R ORB BODY FLAP UP (XE8F26)

ALPHA ( 2) = .067 BETA ( 2) = .174 MACH = .89877 Q = 599.18 P = 1059.7 RN/L = 3.5651

SECTION ( 1)BODY FLAP UPPER DEPENDENT VARIABLE CP

| X/LB | 1.0180 | 1.0460 |
|---|---|---|
| PHI | | |
| .000 | -.2228 | -.2224 |
| 40.000 | -.2202 | -.2371 |

ALPHA ( 2) = .063 BETA ( 3) = 4.252 MACH = .89877 Q = 599.18 P = 1059.7 RN/L = 3.5651

SECTION ( 1)BODY FLAP UPPER DEPENDENT VARIABLE CP

| X/LB | 1.0180 | 1.0460 |
|---|---|---|
| PHI | | |
| .000 | -.2234 | -.2379 |
| 40.000 | -.2417 | -.2474 |

ALPHA ( 3) = 3.954 BETA ( 1) = -3.877 MACH = .89787 Q = 598.42 P = 1060.5 RN/L = 3.5652

SECTION ( 1)BODY FLAP UPPER DEPENDENT VARIABLE CP

| X/LB | 1.0180 | 1.0460 |
|---|---|---|
| PHI | | |
| .000 | -.2286 | -.2287 |
| 40.000 | -.2237 | -.2247 |

ALPHA ( 3) = 3.955 BETA ( 2) = .186 MACH = .89787 Q = 598.42 P = 1060.5 RN/L = 3.5652

SECTION ( 1)BODY FLAP UPPER DEPENDENT VARIABLE CP

| X/LB | 1.0180 | 1.0460 |
|---|---|---|
| PHI | | |
| .000 | -.2089 | -.2137 |
| 40.000 | -.2146 | -.2156 |

ALPHA ( 3) = 3.953 BETA ( 3) = 4.243 MACH = .89787 Q = 598.42 P = 1060.5 RN/L = 3.5652

SECTION ( 1)BODY FLAP UPPER DEPENDENT VARIABLE CP

| X/LB | 1.0180 | 1.0460 |
|---|---|---|
| PHI | | |
| .000 | -.2117 | -.2189 |
| 40.000 | -.2235 | -.2360 |

AMES 11-073(OA148) -14CA/B/C/R ORB BODY FLAP UP (XE8F26)

ALPHA ( 4) = 7.938 BETA ( 1) = -3.870 MACH = .89930 Q = 600.20 P = 1060.2 RN/L = 3.5747

SECTION ( 1)BODY FLAP UPPER DEPENDENT VARIABLE CP

| X/LB | 1.0180 | 1.0460 |
|---|---|---|
| PHI | | |
| .000 | -.2187 | -.2146 |
| 40.000 | -.2141 | -.2127 |

ALPHA ( 4) = 7.938 BETA ( 2) = .179 MACH = .89930 Q = 600.20 P = 1060.2 RN/L = 3.5747

SECTION ( 1)BODY FLAP UPPER DEPENDENT VARIABLE CP

| X/LB | 1.0180 | 1.0460 |
|---|---|---|
| PHI | | |
| .000 | -.2098 | -.2099 |
| 40.000 | -.2197 | -.2235 |

ALPHA ( 4) = 7.933 BETA ( 3) = 4.243 MACH = .89930 Q = 600.20 P = 1060.2 RN/L = 3.5747

SECTION ( 1)BODY FLAP UPPER DEPENDENT VARIABLE CP

| X/LB | 1.0180 | 1.0460 |
|---|---|---|
| PHI | | |
| .000 | -.2237 | -.2229 |
| 40.000 | -.2260 | -.2294 |

ALPHA ( 5) = 11.953 BETA ( 1) = -3.854 MACH = .89857 Q = 599.22 P = 1060.2 RN/L = 3.5673

SECTION ( 1)BODY FLAP UPPER DEPENDENT VARIABLE CP

| X/LB | 1.0180 | 1.0460 |
|---|---|---|
| PHI | | |
| .000 | -.2333 | -.2426 |
| 40.000 | -.2247 | -.2297 |

ALPHA ( 5) = 11.955 BETA ( 2) = .183 MACH = .89857 Q = 599.22 P = 1060.2 RN/L = 3.5673

SECTION ( 1)BODY FLAP UPPER DEPENDENT VARIABLE CP

| X/LB | 1.0180 | 1.0460 |
|---|---|---|
| PHI | | |
| .000 | -.2345 | -.2470 |
| 40.000 | -.2432 | -.2498 |

AMES 11-073(OA148) -140A/B/C/R ORB BODY FLAP UP (XEBF26)

ALPHA ( 5) = 11.949 BETA ( 3) = 4.257 MACH = .89857 Q = 599.22 P = 1060.2 RN/L = 3.5573

SECTION ( 1)BODY FLAP UPPER DEPENDENT VARIABLE CP

| X/LB | 1.0180 | 1.0460 |
|---|---|---|
| PHI | | |
| .000 | -.2434 | -.2436 |
| 40.000 | -.2429 | -.2557 |

AMES 11-073(OA148) -140A/B/C/R ORB BODY FLAP UP (XE8F27) ( 05 AUG 75 )

REFERENCE DATA

SREF = 2880.0000 SQ.FT. XMRP = 1076.6800 IN. XO
LREF = 474.8000 IN. YMRP = .0000 IN. YO
BREF = 936.0680 IN. ZMRP = 375.0000 IN. ZO
SCALE = .0300

PARAMETRIC DATA

RUDDER = .000 SPDBRK = .000
BDFLAP = .000 L-ELVN = .000
R-ELVN = .000 MACH = .600

ALPHA ( 1) = -3.986 BETA ( 1) = -7.853 MACH = .59658 Q = 594.56 P = 2386.3 RN/L = 4.8484

SECTION ( 1)BODY FLAP UPPER DEPENDENT VARIABLE CP

| X/LB | 1.0180 | 1.0460 |
|---|---|---|
| PHI | | |
| .000 | -.2259 | -.2566 |
| 40.000 | -.2234 | -.2419 |

ALPHA ( 1) = -3.959 BETA ( 2) = -3.841 MACH = .59658 Q = 594.56 P = 2385.3 RN/L = 4.8464

SECTION ( 1)BODY FLAP UPPER DEPENDENT VARIABLE CP

| X/LB | 1.0180 | 1.0460 |
|---|---|---|
| PHI | | |
| .000 | -.2175 | -.2418 |
| 40.000 | -.2170 | -.2294 |

ALPHA ( 1) = -3.949 BETA ( 3) = .187 MACH = .59658 Q = 594.56 P = 2386.3 RN/L = 4.8484

SECTION ( 1)BODY FLAP UPPER DEPENDENT VARIABLE CP

| X/LB | 1.0180 | 1.0460 |
|---|---|---|
| PHI | | |
| .000 | -.2163 | -.2385 |
| 40.000 | -.2238 | -.2407 |

ALPHA ( 1) = -3.957 BETA ( 4) = 4.268 MACH = .59658 Q = 594.56 P = 2386.3 RN/L = 4.8484

SECTION ( 1)BODY FLAP UPPER DEPENDENT VARIABLE CP

| X/LB | 1.0180 | 1.0460 |
|---|---|---|
| PHI | | |
| .000 | -.2136 | -.2288 |
| 40.000 | -.2340 | -.2682 |

ORIGINAL PAGE IS
OF POOR QUALITY

AMES 11-073(OA148) -140A/B/C/R ORB BODY FLAP UP (XE8F27)

ALPHA ( 1) = -3.972 BETA ( 5) = 8.340 MACH = .59658 Q = 594.56 P = 2386.3 RN/L = 4.8484

SECTION ( 1)BODY FLAP UPPER DEPENDENT VARIABLE CP

| X/LB | 1.0180 | 1.0460 |
|---|---|---|
| PHI | | |
| .000 | -.2160 | -.2300 |
| 40.000 | -.2502 | -.2988 |

ALPHA ( 2) = .056 BETA ( 1) = -7.886 MACH = .59638 Q = 594.21 P = 2386.5 RN/L = 4.8456

SECTION ( 1)BODY FLAP UPPER DEPENDENT VARIABLE CP

| X/LB | 1.0180 | 1.0460 |
|---|---|---|
| PHI | | |
| .000 | -.2242 | -.2489 |
| 40.000 | -.2159 | -.2458 |

ALPHA ( 2) = .055 BETA ( 2) = -3.860 MACH = .59638 Q = 594.21 P = 2386.5 RN/L = 4.8456

SECTION ( 1)BODY FLAP UPPER DEPENDENT VARIABLE CP

| X/LB | 1.0180 | 1.0460 |
|---|---|---|
| PHI | | |
| .000 | -.2139 | -.2463 |
| 40.000 | -.2125 | -.2232 |

ALPHA ( 2) = .070 BETA ( 3) = .184 MACH = .59638 Q = 594.21 P = 2386.5 RN/L = 4.8456

SECTION ( 1)BODY FLAP UPPER DEPENDENT VARIABLE CP

| X/LB | 1.0180 | 1.0460 |
|---|---|---|
| PHI | | |
| .000 | -.2051 | -.2211 |
| 40.000 | -.2158 | -.2370 |

ALPHA ( 2) = .055 BETA ( 4) = 4.247 MACH = .59638 Q = 594.21 P = 2386.5 RN/L = 4.8456

SECTION ( 1)BODY FLAP UPPER DEPENDENT VARIABLE CP

| X/LB | 1.0180 | 1.0460 |
|---|---|---|
| PHI | | |
| .000 | -.2090 | -.2218 |
| 40.000 | -.2441 | -.2524 |

AMES 11-073(OA148) -140A/B/C/R ORB BODY FLAP UP (XE8F27)

ALPHA ( 2) = .000 BETA ( 5) = 8.305 MACH = .59538 Q = 594.21 P = 2386.5 RN/L = 4.8456

SECTION ( 1)BODY FLAP UPPER DEPENDENT VARIABLE CP

| X/LB | 1.0180 | 1.0460 |
|---|---|---|
| PHI | | |
| .000 | -.2151 | -.2253 |
| 40.000 | -.2554 | -.2715 |

ALPHA ( 3) = 3.957 BETA ( 1) = -7.887 MACH = .59608 Q = 593.49 P = 2385.0 RN/L = 4.8432

SECTION ( 1)BODY FLAP UPPER DEPENDENT VARIABLE CP

| X/LB | 1.0180 | 1.0460 |
|---|---|---|
| PHI | | |
| .000 | -.2250 | -.2801 |
| 40.000 | -.2168 | -.2324 |

ALPHA ( 3) = 3.981 BETA ( 2) = -3.863 MACH = .59609 Q = 593.49 P = 2385.0 RN/L = 4.8432

SECTION ( 1)BODY FLAP UPPER DEPENDENT VARIABLE CP

| X/LB | 1.0180 | 1.0460 |
|---|---|---|
| PHI | | |
| .000 | -.2091 | -.2372 |
| 40.000 | -.2034 | -.2227 |

ALPHA ( 3) = 3.981 BETA ( 3) = .188 MACH = .59608 Q = 593.49 P = 2385.0 RN/L = 4.8432

SECTION ( 1)BODY FLAP UPPER DEPENDENT VARIABLE CP

| X/LB | 1.0180 | 1.0460 |
|---|---|---|
| PHI | | |
| .000 | -.1993 | -.2086 |
| 40.000 | -.2090 | -.2242 |

ALPHA ( 3) = 3.978 BETA ( 4) = 4.237 MACH = .59608 Q = 593.49 P = 2385.0 RN/L = 4.8432

SECTION ( 1)BODY FLAP UPPER DEPENDENT VARIABLE CP

| X/LB | 1.0180 | 1.0460 |
|---|---|---|
| PHI | | |
| .000 | -.2063 | -.2168 |
| 40.000 | -.2249 | -.2459 |

AMES 11-073(OA148) -140A/B/C/R ORB BODY FLAP UP DEFECT

ALPHA ( 3) = 3.980 BETA ( 5) = 8.292 MACH = .59608 Q = 593.49 P = 2385.0 PN/L = 4.8432

SECTION ( 1)BODY FLAP UPPER DEPENDENT VARIABLE CP

| X/LB | 1.0180 | 1.0460 |
|---|---|---|
| PHI | | |
| .000 | -.2095 | -.2317 |
| 40.000 | -.2474 | -.2540 |

ALPHA ( 4) = 7.936 BETA ( 1) = -7.885 MACH = .59590 Q = 593.13 P = 2385.0 PN/L = 4.8429

SECTION ( 1)BODY FLAP UPPER DEPENDENT VARIABLE CP

| X/LB | 1.0180 | 1.0460 |
|---|---|---|
| PHI | | |
| .000 | -.2297 | -.2536 |
| 40.000 | -.2178 | -.2338 |

ALPHA ( 4) = 7.944 BETA ( 2) = -3.857 MACH = .59590 Q = 593.13 P = 2385.0 PN/L = 4.8429

SECTION ( 1)BODY FLAP UPPER DEPENDENT VARIABLE CP

| X/LB | 1.0180 | 1.0460 |
|---|---|---|
| PHI | | |
| .000 | -.2113 | -.2142 |
| 40.000 | -.2006 | -.2157 |

ALPHA ( 4) = 8.045 BETA ( 3) = .182 MACH = .59590 Q = 591.13 P = 2385.0 PN/L = 4.8429

SECTION ( 1)BODY FLAP UPPER DEPENDENT VARIABLE CP

| X/LB | 1.0180 | 1.0460 |
|---|---|---|
| PHI | | |
| .000 | -.1937 | -.2018 |
| 40.000 | -.2032 | -.2187 |

ALPHA ( 4) = 8.043 BETA ( 4) = 4.239 MACH = .59590 Q = 593.13 P = 2385.0 PN/L = 4.8429

SECTION ( 1)BODY FLAP UPPER DEPENDENT VARIABLE CP

| X/LB | 1.0180 | 1.0460 |
|---|---|---|
| PHI | | |
| .000 | -.2058 | -.2132 |
| 40.000 | -.2197 | -.2275 |

AMES 11-073(OA148) -140A/B/C/R ORB BODY FLAP UP (XE8F27)

ALPHA ( 4) = 8.041 BETA ( 5) = 8.297 MACH = .59590 Q = 593.13 P = 2386.0 RN/L = 4.8429

SECTION ( 1)BODY FLAP UPPER DEPENDENT VARIABLE CP

| X/LB | 1.0180 | 1.0460 |
|---|---|---|
| PHI | | |
| .000 | -.2104 | -.2359 |
| 40.000 | -.2358 | -.2458 |

ALPHA ( 5) = 11.909 BETA ( 1) = -7.850 MACH = .59646 Q = 594.33 P = 2386.5 RN/L = 4.8458

SECTION ( 1)BODY FLAP UPPER DEPENDENT VARIABLE CP

| X/LB | 1.0180 | 1.0460 |
|---|---|---|
| PHI | | |
| .000 | -.2249 | -.2684 |
| 40.000 | -.2016 | -.2558 |

ALPHA ( 5) = 11.929 BETA ( 2) = -3.836 MACH = .59646 Q = 594.33 P = 2386.5 RN/L = 4.8458

SECTION ( 1)BODY FLAP UPPER DEPENDENT VARIABLE CP

| X/LB | 1.0180 | 1.0460 |
|---|---|---|
| PHI | | |
| .000 | -.2108 | -.2404 |
| 40.000 | -.2090 | -.2182 |

ALPHA ( 5) = 11.930 BETA ( 3) = .181 MACH = .59646 Q = 594.33 P = 2386.5 RN/L = 4.8458

SECTION ( 1)BODY FLAP UPPER DEPENDENT VARIABLE CP

| X/LB | 1.0180 | 1.0460 |
|---|---|---|
| PHI | | |
| .000 | -.2005 | -.2165 |
| 40.000 | -.2122 | -.2222 |

ALPHA ( 5) = 11.930 BETA ( 4) = 4.251 MACH = .59646 Q = 594.33 P = 2386.5 RN/L = 4.8458

SECTION ( 1)BODY FLAP UPPER DEPENDENT VARIABLE CP

| X/LB | 1.0180 | 1.0460 |
|---|---|---|
| PHI | | |
| .000 | -.2042 | -.2281 |
| 40.000 | -.2289 | -.2452 |

AMES 11-073(OA148) -140A/B/C/R ORB BODY FLAP UP (XE8F27)

ALPHA ( 5) = 11.920 BETA ( 5) = 8.317 MACH = .59645 Q = 594.33 P = 2386.5 KN/L = 4.8458

SECTION ( 1)BODY FLAP UPPER DEPE'DENT VARIABLE CP

| X/LB | 1.0180 | 1.0460 |
|---|---|---|
| PHI | | |
| .000 | -.2323 | -.2496 |
| 40.000 | -.2427 | -.2614 |

AMES 11-073(OA148) -140A/B/C/R ORB BODY FLAP UP (XE8F28) ( 05 AUG 75 )

REFERENCE DATA

SREF = 2690.0000 SQ.FT. XMRP = 1076.6800 IN. XO
LREF = 474.2000 IN. YMRP = .0000 IN. YO
BREF = 936.0690 IN. ZMRP = 375.0000 IN. ZO
SCALE = .0300

PARAMETRIC DATA

RUDDER = -10.000 SPDBRK = 35.000
BDFLAP = 16.300 L-ELVN = 10.000
R-ELVN = .000 MACH = 1.400

ALPHA ( 1) = -3.978 BETA ( 1) = -3.855 MACH = 1.3927 Q = 599.58 P = 441.59 RN/L = 2.9214

SECTION ( 1)BODY FLAP UPPER DEPENDENT VARIABLE CP

| X/LB | 1.0180 | 1.0460 |
|---|---|---|
| PHI | | |
| .000 | -.3323 | -.3271 |
| 40.000 | -.3502 | -.3632 |

ALPHA ( 1) = -3.971 BETA ( 2) = .185 MACH = 1.3927 Q = 599.58 P = 441.59 RN/L = 2.9214

SECTION ( 1)BODY FLAP UPPER DEPENDENT VARIABLE CP

| X/LB | 1.0180 | 1.0460 |
|---|---|---|
| PHI | | |
| .000 | -.3223 | -.3207 |
| 40.000 | -.3369 | -.3801 |

ALPHA ( 1) = -3.978 BETA ( 3) = 4.270 MACH = 1.3927 Q = 599.58 P = 441.59 RN/L = 2.9214

SECTION ( 1)BODY FLAP UPPER DEPENDENT VARIABLE CP

| X/LB | 1.0180 | 1.0460 |
|---|---|---|
| PHI | | |
| .000 | -.3324 | -.3321 |
| 40.000 | -.3827 | -.3835 |

ALPHA ( 2) = -.069 BETA ( 1) = -3.876 MACH = 1.3934 Q = 600.11 P = 441.59 RN/L = 2.9212

SECTION ( 1)BODY FLAP UPPER DEPENDENT VARIABLE CP

| X/LB | 1.0180 | 1.0460 |
|---|---|---|
| PHI | | |
| .000 | -.3268 | -.3288 |
| 40.000 | -.3564 | -.3722 |

ORIGINAL PAGE IS
OF POOR QUALITY

AMES 11-073(OA148) -140A/B/C/R ORB BODY FLAP UP (XEBF28) 1G

ALPHA ( 2) = -.045 BETA ( 2) = .182 MACH = 1.3934 Q = 600.11 P = 441.59 RN/L = 2.9212

SECTION ( 1)BODY FLAP UPPER DEPENDENT VARIABLE CP

| X/LB | 1.0180 | 1.0460 |
|---|---|---|
| PHI | | |
| .000 | -.3333 | -.3373 |
| 40.000 | -.3558 | -.3697 |

ALPHA ( 2) = -.049 BETA ( 3) = 4.247 MACH = 1.3934 Q = 600.11 P = 441.59 RN/L = 2.9212

SECTION ( 1)BODY FLAP UPPER DEPENDENT VARIABLE CP

| X/LB | 1.0180 | 1.0460 |
|---|---|---|
| PHI | | |
| .000 | -.3405 | -.3490 |
| 40.000 | -.3589 | -.3682 |

ALPHA ( 3) = 3.888 BETA ( 1) = -3.879 MACH = 1.3920 Q = 599.57 P = 442.06 RN/L = 2.9184

SECTION ( 1)BODY FLAP UPPER DEPENDENT VARIABLE CP

| X/LB | 1.0180 | 1.0460 |
|---|---|---|
| PHI | | |
| .000 | -.3388 | -.3431 |
| 40.000 | -.3589 | -.3696 |

ALPHA ( 3) = 3.892 BETA ( 2) = .179 MACH = 1.3920 Q = 599.57 P = 442.06 RN/L = 2.9184

SECTION ( 1)BODY FLAP UPPER DEPENDENT VARIABLE CP

| X/LB | 1.0180 | 1.0460 |
|---|---|---|
| PHI | | |
| .000 | -.3430 | -.3510 |
| 40.000 | -.3474 | -.3500 |

ALPHA ( 3) = 3.895 BETA ( 3) = 4.241 MACH = 1.3920 Q = 599.57 P = 442.06 RN/L = 2.9184

SECTION ( 1)BODY FLAP UPPER DEPENDENT VARIABLE CP

| X/LB | 1.0180 | 1.0460 |
|---|---|---|
| PHI | | |
| .000 | -.3420 | -.3502 |
| 40.000 | -.3557 | -.3675 |

AMES 11-073(OA148) -140A/B/C/R ORB BODY FLAP UP (XE8F28)

ALPHA ( 4) = 7.940 BETA ( 1) = -3.870 MACH = 1.3916 Q = 599.57 P = 442.30 RN/L = 2.9184

SECTION ( 1)BODY FLAP UPPER DEPENDENT VARIABLE CP

| X/LB | 1.0180 | 1.0460 |
|---|---|---|
| PHI | | |
| .000 | -.3463 | -.3484 |
| 40.000 | -.3649 | -.3640 |

ALPHA ( 4) = 7.946 BETA ( 2) = .176 MACH = 1.3916 Q = 599.57 P = 442.30 RN/L = 2.9184

SECTION ( 1)BODY FLAP UPPER DEPENDENT VARIABLE CP

| X/LB | 1.0180 | 1.0460 |
|---|---|---|
| PHI | | |
| .000 | -.3407 | -.3426 |
| 40.000 | -.3587 | -.3569 |

ALPHA ( 4) = 7.949 BETA ( 3) = 4.238 MACH = 1.3916 Q = 599.57 P = 442.30 RN/L = 2.9184

SECTION ( 1)BODY FLAP UPPER DEPENDENT VARIABLE CP

| X/LB | 1.0180 | 1.0460 |
|---|---|---|
| PHI | | |
| .000 | -.3574 | -.3655 |
| 40.000 | -.3423 | -.3503 |

ALPHA ( 5) = 11.853 BETA ( 1) = -3.856 MACH = 1.3913 Q = 599.66 P = 442.53 RN/L = 2.9180

SECTION ( 1)BODY FLAP UPPER DEPENDENT VARIABLE CP

| X/LB | 1.0180 | 1.0460 |
|---|---|---|
| PHI | | |
| .000 | -.3508 | -.3492 |
| 40.000 | -.3714 | -.3819 |

ALPHA ( 5) = 11.873 BETA ( 2) = .179 MACH = 1.3913 Q = 599.66 P = 442.53 RN/L = 2.9180

SECTION ( 1)BODY FLAP UPPER DEPENDENT VARIABLE CP

| X/LB | 1.0180 | 1.0460 |
|---|---|---|
| PHI | | |
| .000 | -.3625 | -.3703 |
| 40.000 | -.3538 | -.3715 |

AMES 11-073(OA148) -140A/B/C/R ORB BODY FLAP UP (XE8F28)

ALPHA ( 5) = 11.870 BETA ( 3) = 4.256 MACH = 1.3913 Q = 599.66 P = 442.53 RN/L = 2.9180

SECTION ( 1)BODY FLAP UPPER DEPENDENT VARIABLE CP

| X/LB | 1.0180 | 1.0460 |
|---|---|---|
| PHI | | |
| .000 | -.3855 | -.3848 |
| 40.000 | -.3420 | -.3502 |

ALPHA ( 6) = 15.854 BETA ( 1) = -3.831 MACH = 1.3903 Q = 599.44 P = 443.00 RN/L = 2.9206

SECTION ( 1)BODY FLAP UPPER DEPENDENT VARIABLE CP

| X/LB | 1.0180 | 1.0460 |
|---|---|---|
| PHI | | |
| .000 | -.3732 | -.3665 |
| 40.000 | -.3736 | -.3878 |

ALPHA ( 6) = 15.868 BETA ( 2) = .178 MACH = 1.3903 Q = 599.44 P = 443.00 RN/L = 2.9206

SECTION ( 1)BODY FLAP UPPER DEPENDENT VARIABLE CP

| X/LB | 1.0180 | 1.0460 |
|---|---|---|
| PHI | | |
| .000 | -.3971 | -.3895 |
| 40.000 | -.3488 | -.3602 |

ALPHA ( 6) = 15.859 BETA ( 3) = 4.283 MACH = 1.3903 Q = 599.44 P = 443.00 RN/L = 2.9206

SECTION ( 1)BODY FLAP UPPER DEPENDENT VARIABLE CP

| X/LB | 1.0180 | 1.0460 |
|---|---|---|
| PHI | | |
| .000 | -.3936 | -.3991 |
| 40.000 | -.3680 | -.3881 |

AMES 11-073(OA148) -140A/B/C/R ORB BODY FLAP UP (XE8F29) ( 05 AUG 75 )

REFERENCE DATA

SREF = 2690.0000 SQ.FT. XMRP = 1076.6900 IN. XO
LREF = 474.8000 IN. YMRP = .0000 IN. YO
BREF = 935.0690 IN. ZMRP = 375.0000 IN. ZO
SCALE = .0300

PARAMETRIC DATA

RUDDER = -10.000 SPDBRK = 35.000
BDFLAP = 16.300 L-ELVN = 10.000
R-ELVN = .000 MACH = 1.250

ALPHA ( 1) = -3.985 BETA ( 1) = -3.845 MACH = 1.2451 Q = 599.58 P = 552.51 RN/L = 3.0225

SECTION ( 1)BODY FLAP UPPER DEPENDENT VARIABLE CP

| X/LB | 1.0180 | 1.0460 |
|---|---|---|
| PHI | | |
| .000 | -.3544 | -.3698 |
| 40.000 | -.3937 | -.4159 |

ALPHA ( 1) = -3.967 BETA ( 2) = .186 MACH = 1.2451 Q = 599.58 P = 552.51 RN/L = 3.0225

SECTION ( 1)BODY FLAP UPPER DEPENDENT VARIABLE CP

| X/LB | 1.0180 | 1.0460 |
|---|---|---|
| PHI | | |
| .000 | -.3609 | -.3607 |
| 40.000 | -.4032 | -.4214 |

ALPHA ( 1) = -3.974 BETA ( 3) = 4.269 MACH = 1.2451 Q = 599.59 P = 552.51 RN/L = 3.0225

SECTION ( 1)BODY FLAP UPPER DEPENDENT VARIABLE CP

| X/LB | 1.0180 | 1.0460 |
|---|---|---|
| PHI | | |
| .000 | -.3729 | -.3691 |
| 40.000 | -.4185 | -.4142 |

ALPHA ( 2) = -.035 BETA ( 1) = -3.871 MACH = 1.2459 Q = 599.80 P = 552.04 RN/L = 3.0192

SECTION ( 1)BODY FLAP UPPER DEPENDENT VARIABLE CP

| X/LB | 1.0180 | 1.0460 |
|---|---|---|
| PHI | | |
| .000 | -.3674 | -.3757 |
| 40.000 | -.3915 | -.4047 |

AMES 11-073(OA148) -140A/B/C/R ORB BODY FLAP UP (XE8F29)

ALPHA ( 2) = -.027 BETA ( 2) = .182 MACH = 1.2459 Q = 599.80 P = 552.04 RN/L = 3.0192

SECTION ( 1)BODY FLAP UPPER DEPENDENT VARIABLE CP

| X/LB | 1.0180 | 1.0460 |
|---|---|---|
| PHI | | |
| .000 | -.3718 | -.3749 |
| 40.000 | -.3900 | -.4044 |

ALPHA ( 2) = -.032 BETA ( 3) = 4.246 MACH = 1.2459 Q = 599.80 P = 552.04 RN/L = 3.0192

SECTION ( 1)BODY FLAP UPPER DEPENDENT VARIABLE CP

| X/LB | 1.0180 | 1.0460 |
|---|---|---|
| PHI | | |
| .000 | -.3765 | -.3833 |
| 40.000 | -.3987 | -.4091 |

ALPHA ( 3) = 3.922 BETA ( 1) = -3.869 MACH = 1.2454 Q = 599.82 P = 552.51 RN/L = 3.0214

SECTION ( 1)BODY FLAP UPPER DEPENDENT VARIABLE CP

| X/LB | 1.0180 | 1.0460 |
|---|---|---|
| PHI | | |
| .000 | -.3808 | -.3988 |
| 40.000 | -.3983 | -.4095 |

ALPHA ( 3) = 3.922 BETA ( 2) = .180 MACH = 1.2454 Q = 599.82 P = 552.51 RN/L = 3.0214

SECTION ( 1)BODY FLAP UPPER DEPENDENT VARIABLE CP

| X/LB | 1.0180 | 1.0460 |
|---|---|---|
| PHI | | |
| .000 | -.3832 | -.3924 |
| 40.000 | -.3963 | -.4031 |

ALPHA ( 3) = 3.925 BETA ( 3) = 4.237 MACH = 1.2454 Q = 599.82 P = 552.51 RN/L = 3.0214

SECTION ( 1)BODY FLAP UPPER DEPENDENT VARIABLE CP

| X/LB | 1.0180 | 1.0460 |
|---|---|---|
| PHI | | |
| .000 | -.3758 | -.3793 |
| 40.000 | -.3952 | -.4103 |

AMES 11-073(OA148) -140A/B/C/R ORB BODY FLAP UP (XE8F29)

ALPHA ( 4) = 7.990 BETA ( 1) = -3.870 MACH = 1.2446 Q = 599.59 P = 552.98 RN/L = 3.0205

SECTION ( 1)BODY FLAP UPPER DEPENDENT VARIABLE CP

| X/LB | 1.0180 | 1.0460 |
|---|---|---|
| PHI | | |
| .000 | -.3955 | -.4022 |
| 40.000 | -.4175 | -.4192 |

ALPHA ( 4) = 7.994 BETA ( 2) = .176 MACH = 1.2446 Q = 599.59 P = 552.98 RN/L = 3.0205

SECTION ( 1)BODY FLAP UPPER DEPENDENT VARIABLE CP

| X/LB | 1.0180 | 1.0460 |
|---|---|---|
| PHI | | |
| .000 | -.3885 | -.3939 |
| 40.000 | -.4084 | -.4191 |

ALPHA ( 4) = 7.995 BETA ( 3) = 4.240 MACH = 1.2446 Q = 599.59 P = 552.98 RN/L = 3.0205

SECTION ( 1)BODY FLAP UPPER DEPENDENT VARIABLE CP

| X/LB | 1.0180 | 1.0460 |
|---|---|---|
| PHI | | |
| .000 | -.3930 | -.3999 |
| 40.000 | -.3985 | -.4119 |

ALPHA ( 5) = 11.923 BETA ( 1) = -3.851 MACH = 1.2447 Q = 599.71 P = 552.98 RN/L = 3.0237

SECTION ( 1)BODY FLAP UPPER DEPENDENT VARIABLE CP

| X/LB | 1.0180 | 1.0460 |
|---|---|---|
| PHI | | |
| .000 | -.4033 | -.4042 |
| 40.000 | -.4198 | -.4482 |

ALPHA ( 5) = 11.934 BETA ( 2) = .177 MACH = 1.2447 Q = 599.71 P = 552.98 RN/L = 3.0237

SECTION ( 1)BODY FLAP UPPER DEPENDENT VARIABLE CP

| X/LB | 1.0180 | 1.0460 |
|---|---|---|
| PHI | | |
| .000 | -.4005 | -.4023 |
| 40.000 | -.4099 | -.4397 |

ORIGINAL PAGE IS
OF POOR QUALITY

AMES 11-073(OA148) -140A/B/C/R ORB BODY FLAP UP (XEBF29)

ALPHA ( 5) = 11.927 BETA ( 3) = 4.253 MACH = 1.2447 Q = 599.71 P = 552.98 RN/L = 3.0237

SECTION ( 1)BODY FLAP UPPER DEPENDENT VARIABLE CP

| X/LB | 1.3160 | 1.0460 |
|---|---|---|
| PHI | | |
| .000 | -.4091 | -.4188 |
| 40.000 | -.3933 | -.4152 |

AMES 11-073(OA148) -140A/B/C/R ORB BODY FLAP UP (XEBF30) ( 05 AUG 75 )

REFERENCE DATA

SREF = 8880.0000 SQ.FT. XMRP = 1076.6800 IN. XO
LREF = 474.8000 IN. YMRP = .0000 IN. YO
BREF = 888.0000 IN. ZMRP = 375.0000 IN. ZO
SCALE = .0200

PARAMETRIC DATA

RUDDER = -10.000 SPDBRK = 35.000
BDFLAP = 16.300 L-ELVN = 10.000
R-ELVN = .000 MACH = 1.100

ALPHA ( 1) = -3.994 BETA ( 1) = -3.852 MACH = 1.0997 Q = 600.21 P = 709.06 RN/L = 3.1908

SECTION ( 1)BODY FLAP UPPER DEPENDENT VARIABLE CP

| X/LB | 1.0190 | 1.0460 |
|---|---|---|
| PHI | | |
| .000 | -.4289 | -.4501 |
| 40.000 | -.4333 | -.4527 |

ALPHA ( 1) = -3.995 BETA ( 2) = .190 MACH = 1.0997 Q = 600.21 P = 709.06 RN/L = 3.1908

SECTION ( 1)BODY FLAP UPPER DEPENDENT VARIABLE CP

| X/LB | 1.0190 | 1.0460 |
|---|---|---|
| PHI | | |
| .000 | -.4160 | -.4272 |
| 40.000 | -.4400 | -.4423 |

ALPHA ( 1) = -3.992 BETA ( 3) = 4.268 MACH = 1.0997 Q = 600.21 P = 709.06 RN/L = 3.1908

SECTION ( 1)BODY FLAP UPPER DEPENDENT VARIABLE CP

| X/LB | 1.0190 | 1.0460 |
|---|---|---|
| PHI | | |
| .000 | -.4248 | -.4255 |
| 40.000 | -.4454 | -.4534 |

ALPHA ( 2) = -.020 BETA ( 1) = -3.0955 MACH = 1.0986 Q = 599.48 P = 709.54 RN/L = 3.1886

SECTION ( 1)BODY FLAP UPPER DEPENDENT VARIABLE CP

| X/LB | 1.0190 | 1.0460 |
|---|---|---|
| PHI | | |
| .000 | -.4277 | -.4381 |
| 40.000 | -.4325 | -.4537 |

AMES 11-073(OA148) -140A/B/C/R ORB BODY FLAP UP (XE6F30) 1A

ALPHA ( 2) = -.014 BETA ( 2) = .187 MACH = 1.0986 Q = 599.48 P = 709.54 RN/L = 3.1886

SECTION : 1:BODY FLAP UPPER DEPENDENT VARIABLE CP

| X/LB | 1.0180 | 1.0460 |
|---|---|---|
| PHI | | |
| .000 | -.4152 | -.4277 |
| 40.000 | -.4327 | -.4474 |

ALPHA ( 2) = -.017 BETA ( 3) = 4.244 MACH = 1.0986 Q = 599.48 P = 709.54 RN/L = 3.1886

SECTION : 1:BODY FLAP UPPER DEPENDENT VARIABLE CP

| X/LB | 1.0180 | 1.0460 |
|---|---|---|
| PHI | | |
| .000 | -.4127 | -.4199 |
| 40.000 | -.4375 | -.4446 |

ALPHA ( 3) = 3.959 BETA ( 1) = -3.869 MACH = 1.1006 Q = 600.44 P = 708.14 RN/L = 3.1894

SECTION : 1:BODY FLAP UPPER DEPENDENT VARIABLE CP

| X/LB | 1.0180 | 1.0460 |
|---|---|---|
| PHI | | |
| .000 | -.4296 | -.4289 |
| 40.000 | -.4335 | -.4560 |

ALPHA ( 3) = 3.959 BETA ( 2) = .177 MACH = 1.1006 Q = 600.44 P = 708.14 RN/L = 3.1894

SECTION : 1:BODY FLAP UPPER DEPENDENT VARIABLE CP

| X/LB | 1.0180 | 1.0460 |
|---|---|---|
| PHI | | |
| .000 | -.4092 | -.4193 |
| 40.000 | -.4293 | -.4476 |

ALPHA ( 3) = 3.960 BETA ( 3) = 4.234 MACH = 1.1006 Q = 600.44 P = 708.14 RN/L = 3.1894

SECTION : 1:BODY FLAP UPPER DEPENDENT VARIABLE CP

| X/LB | 1.0180 | 1.0460 |
|---|---|---|
| PHI | | |
| .000 | -.4139 | -.4160 |
| 40.000 | -.4267 | -.4484 |

AMES 11-073(OA148) -140A/B/C/R ORB BODY FLAP UP (XE8F30)

ALPHA ( 4) = 8.035 BETA ( 1) = -3.862 MACH = 1.0985 Q = 599.52 P = 709.77 RN/L = 3.1893

SECTION ( 1)BODY FLAP UPPER DEPENDENT VARIABLE CP

| X/LB | 1.0180 | 1.0460 |
|---|---|---|
| PHI | | |
| .000 | -.4633 | -.4675 |
| 40.000 | -.4633 | -.4619 |

ALPHA ( 4) = 8.041 BETA ( 2) = .181 MACH = 1.0985 Q = 599.52 P = 709.77 RN/L = 3.1893

SECTION ( 1)BODY FLAP UPPER DEPENDENT VARIABLE CP

| X/LB | 1.0180 | 1.0460 |
|---|---|---|
| PHI | | |
| .000 | -.4341 | -.4355 |
| 40.000 | -.4447 | -.4457 |

ALPHA ( 4) = 8.040 BETA ( 3) = 4.238 MACH = 1.0985 Q = 599.52 P = 709.77 RN/L = 3.1893

SECTION ( 1)BODY FLAP UPPER DEPENDENT VARIABLE CP

| X/LB | 1.0180 | 1.0460 |
|---|---|---|
| PHI | | |
| .000 | -.4404 | -.4463 |
| 40.000 | -.4253 | -.4525 |

ALPHA ( 5) = 11.975 BETA ( 1) = -3.843 MACH = 1.0970 Q = 599.10 P = 711.19 RN/L = 3.1892

SECTION ( 1)BODY FLAP UPPER DEPENDENT VARIABLE CP

| X/LB | 1.0180 | 1.0460 |
|---|---|---|
| PHI | | |
| .000 | -.4633 | -.4621 |
| 40.000 | -.4621 | -.4577 |

ALPHA ( 5) = 11.985 BETA ( 2) = .181 MACH = 1.0970 Q = 599.10 P = 711.19 RN/L = 3.1892

SECTION ( 1)BODY FLAP UPPER DEPENDENT VARIABLE CP

| X/LB | 1.0180 | 1.0460 |
|---|---|---|
| PHI | | |
| .000 | [illegible] | -.4509 |
| 40.000 | -.4404 | -.4473 |

AMES 11-073(OA148) -140A/B/C/R ORB BODY FLAP UP (YEBF30)

ALPHA ( 5) = 11.077 BETA ( 3) = 4.250 MACH = 1.0977 Q = 599.10 P = 711.19 PN L = 3.1992

SECTION ( 1) BODY FLAP UPPER DEPENDENT VARIABLE CP

| X LB | 1.0190 | 1.0450 |
|---|---|---|
| PHI | | |
| .000 | +.4695 | -.4703 |
| 40.000 | +.4386 | -.4499 |

AMES 11-073(OA148) -140A/B/C/R ORB BODY FLAP UP (XEBF31) ( 05 AUG 75 )

REFERENCE DATA

SREF = 2690.0000 SQ.FT. XMRP = 1076.6800 IN. XO
LREF = 474.8000 IN. YMRP = .0000 IN. YO
BREF = 935.0680 IN. ZMRP = 375.0000 IN. ZO
SCALE = .0300

PARAMETRIC DATA

RUDDER = -10.000 SPDBRK = 35.000
BDFLAP = 16.300 L-ELVN = 10.000
R-ELVN = .000 MACH = .900

ALPHA ( 1) = -3.977 BETA ( 1) = -3.952 MACH = .89977 Q = 600.28 P = 1059.2 RN/L = 3.5777

SECTION ( 1)BODY FLAP UPPER DEPENDENT VARIABLE CP

| X/LB | 1.0180 | 1.0460 |
|---|---|---|
| PHI | | |
| .000 | -.2937 | -.2894 |
| 40.000 | -.3159 | -.3076 |

ALPHA ( 1) = -3.975 BETA ( 2) = .187 MACH = .89977 Q = 600.28 P = 1059.2 RN/L = 3.5777

SECTION ( 1)BODY FLAP UPPER DEPENDENT VARIABLE CP

| X/LB | 1.0180 | 1.0460 |
|---|---|---|
| PHI | | |
| .000 | -.3331 | -.3040 |
| 40.000 | -.3202 | -.3354 |

ALPHA ( 1) = -3.996 BETA ( 3) = 4.269 MACH = .89977 Q = 600.28 P = 1059.2 RN/L = 3.5777

SECTION ( 1)BODY FLAP UPPER DEPENDENT VARIABLE CP

| X/LB | 1.0180 | 1.0460 |
|---|---|---|
| PHI | | |
| .000 | -.3213 | -.3139 |
| 40.000 | -.3335 | -.3327 |

ALPHA ( 2) = -.002 BETA ( 1) = -3.870 MACH = .89780 Q = 598.63 P = 1060.9 RN/L = 3.5706

SECTION ( 1)BODY FLAP UPPER DEPENDENT VARIABLE CP

| X/LB | 1.0180 | 1.0460 |
|---|---|---|
| PHI | | |
| .000 | -.2998 | -.2912 |
| 40.000 | -.3287 | -.3287 |

AMES 11-073(OA148) -140A/B/C/R ORB BODY FLAP UP (XEBF31)

ALPHA ( 2) = .000 BETA ( 2) = .184 MACH = .89780 Q = 598.63 P = 1060.9 RN/L = 3.5706

SECTION ( 1)BODY FLAP UPPER DEPENDENT VARIABLE CP

| X/LB | 1.0180 | 1.0460 |
|---|---|---|
| PHI | | |
| .000 | -.3015 | -.3083 |
| 40.000 | -.3206 | -.3303 |

ALPHA ( 2) = -.010 BETA ( 3) = 4.247 MACH = .89780 Q = 598.63 P = 1060.9 RN/L = 3.5706

SECTION ( 1)BODY FLAP UPPER DEPENDENT VARIABLE CP

| X/LB | 1.0180 | 1.0460 |
|---|---|---|
| PHI | | |
| .000 | -.3176 | -.3176 |
| 40.000 | -.3247 | -.3342 |

ALPHA ( 3) = 3.984 BETA ( 1) = -3.872 MACH = .89870 Q = 599.00 P = 1059.5 RN/L = 3.5709

SECTION ( 1)BODY FLAP UPPER DEPENDENT VARIABLE CP

| X/LB | 1.0180 | 1.0460 |
|---|---|---|
| PHI | | |
| .000 | -.2969 | -.3123 |
| 40.000 | -.3066 | -.3334 |

ALPHA ( 3) = 3.983 BETA ( 2) = .184 MACH = .89870 Q = 599.00 P = 1059.5 RN/L = 3.5709

SECTION ( 1)BODY FLAP UPPER DEPENDENT VARIABLE CP

| X/LB | 1.0180 | 1.0460 |
|---|---|---|
| PHI | | |
| .000 | -.2921 | -.3105 |
| 40.000 | -.3148 | -.3191 |

ALPHA ( 3) = 3.979 BETA ( 3) = 4.243 MACH = .89870 Q = 599.00 P = 1059.5 RN/L = 3.5709

SECTION ( 1)BODY FLAP UPPER DEPENDENT VARIABLE CP

| X/LB | 1.0180 | 1.0460 |
|---|---|---|
| PHI | | |
| .000 | -.3103 | -.3109 |
| 40.000 | -.3108 | -.3165 |

AMES 11-073(OA148) -140A/B/C/R ORB BODY FLAP UP (XE8F31)

ALPHA ( 4) = 8.057 BETA ( 1) = -3.860 MACH = .89807 Q = 598.57 P = 1060.2 RN/L = 3.5677

SECTION ( 1)BODY FLAP UPPER DEPENDENT VARIABLE CP

| X/LB | 1.0180 | 1.0460 |
|---|---|---|
| PHI | | |
| .000 | -.2953 | -.3078 |
| 40.000 | -.3055 | -.3247 |

ALPHA ( 4) = 8.064 BETA ( 2) = .187 MACH = .89807 Q = 598.57 P = 1060.2 RN/L = 3.5677

SECTION ( 1)BODY FLAP UPPER DEPENDENT VARIABLE CP

| X/LB | 1.0180 | 1.0460 |
|---|---|---|
| PHI | | |
| .000 | -.3157 | -.3171 |
| 40.000 | -.3024 | -.3171 |

ALPHA ( 4) = 8.059 BETA ( 3) = 4.245 MACH = .89807 Q = 598.57 P = 1060.2 RN/L = 3.5677

SECTION ( 1)BODY FLAP UPPER DEPENDENT VARIABLE CP

| X/LB | 1.0180 | 1.0460 |
|---|---|---|
| PHI | | |
| .000 | -.3241 | -.3088 |
| 40.000 | -.3177 | -.3147 |

ALPHA ( 5) = 11.980 BETA ( 1) = -3.854 MACH = .89717 Q = 598.01 P = 1061.4 RN/L = 3.5714

SECTION ( 1)BODY FLAP UPPER DEPENDENT VARIABLE CP

| X/LB | 1.0180 | 1.0460 |
|---|---|---|
| PHI | | |
| .000 | -.2926 | -.2992 |
| 40.000 | -.2890 | -.3035 |

ALPHA ( 5) = 11.990 BETA ( 2) = .184 MACH = .89717 Q = 598.01 P = 1061.4 RN/L = 3.5714

SECTION ( 1)BODY FLAP UPPER DEPENDENT VARIABLE CP

| X/LB | 1.0180 | 1.0460 |
|---|---|---|
| PHI | | |
| .000 | -.2915 | -.3000 |
| 40.000 | -.2903 | -.3000 |

ORIGINAL PAGE IS
OF POOR QUALITY

AMES 11-073(OA148) -140A/B/C/R ORE 30DY FLAP UP (XE8F31)

ALPHA ( 5) = 11.975 BETA ( 3) = 4.259 MACH = .89717 Q = 598.01 P = 1061.4 RN/L = 3.5714

SECTION ( 1)BODY FLAP UPPER DEPENDENT VARIABLE CP

| X/LB | 1.0180 | 1.0460 |
|---|---|---|
| PHI | | |
| .000 | -.3020 | -.3136 |
| 40.000 | -.2937 | -.3204 |

AMES 11-073(OA148) -140A/B/C/R ORB BODY FLAP UP (XE8F32) ( 05 AUG 75 )

REFERENCE DATA

SREF = 2690.0000 SQ.FT. XMRP = 1076.6800 IN. XO
LREF = 474.8000 IN. YMRP = .0000 IN. YO
BREF = 936.0680 IN. ZMRP = 375.0000 IN. ZO
SCALE = .0300

PARAMETRIC DATA

RUDDER = -10.000 SPDBRK = 35.000
BDFLAP = 16.300 L-ELVN = 10.000
R-ELVN = .000 MACH = .600

ALPHA ( 1) = -4.052 BETA ( 1) = -7.850 MACH = .59664 Q = 594.68 P = 2386.3 RN/L = 4.8170

SECTION ( ) BODY FLAP UPPER DEPENDENT VARIABLE CP

| X/LB | 1.0180 | 1.0460 |
|---|---|---|
| PHI | | |
| .000 | -.2613 | -.2755 |
| 40.000 | -.2330 | -.2486 |

ALPHA ( 1) = -4.036 BETA ( 2) = -3.835 MACH = .59664 Q = 594.68 P = 2386.3 RN/L = 4.8170

SECTION ( 1)BODY FLAP UPPER DEPENDENT VARIABLE CP

| X/LB | 1.0180 | 1.0460 |
|---|---|---|
| PHI | | |
| .000 | -.2634 | -.2703 |
| 40.000 | -.2342 | -.2658 |

ALPHA ( 1) = -4.020 BETA ( 3) = .192 MACH = .59664 Q = 594.68 P = 2386.3 RN/L = 4.8170

SECTION ( 1)BODY FLAP UPPER DEPENDENT VARIABLE CP

| X/LB | 1.0180 | 1.0460 |
|---|---|---|
| PHI | | |
| .000 | -.2443 | -.2469 |
| 40.000 | -.2675 | -.3183 |

ALPHA ( 1) = -4.028 BETA ( 4) = 4.273 MACH = .59664 Q = 594.68 P = 2386.3 RN/L = 4.8170

SECTION ( 1)BODY FLAP UPPER DEPENDENT VARIABLE CP

| X/LB | 1.0180 | 1.0460 |
|---|---|---|
| PHI | | |
| .000 | -.2381 | -.2473 |
| 40.000 | -.2704 | -.3066 |

AMES 11-073(OA148) -140A/B/C/R ORB BODY FLAP UP (XE8F32)

ALPHA ( 1) = -4.045 BETA ( 5) = 8.346 MACH = .59664 Q = 594.88 P = 2386.3 RN/L = 4.8170

SECTION ( 1)BODY FLAP UPPER DEPENDENT VARIABLE CP

| X/LB | 1.0180 | 1.0460 |
|---|---|---|
| PHI | | |
| .000 | -.2536 | -.2559 |
| 40.000 | -.2880 | -.3206 |

ALPHA ( 2) = .034 BETA ( 1) = -7.883 MACH = .59622 Q = 593.85 P = 2386.3 RN/L = 4.8132

SECTION ( 1)BODY FLAP UPPER DEPENDENT VARIABLE CP

| X/LB | 1.0180 | 1.0460 |
|---|---|---|
| PHI | | |
| .000 | -.2561 | -.2651 |
| 40.000 | -.2274 | -.2606 |

ALPHA ( 2) = .043 BETA ( 2) = -3.857 MACH = .59622 Q = 593.85 P = 2386.3 RN/L = 4.8132

SECTION ( 1)BODY FLAP UPPER DEPENDENT VARIABLE CP

| X/LB | 1.0180 | 1.0460 |
|---|---|---|
| PHI | | |
| .000 | -.2523 | -.2634 |
| 40.000 | -.2454 | -.2702 |

ALPHA ( 2) = .045 BETA ( 3) = .186 MACH = .59622 Q = 593.85 P = 2386.3 RN/L = 4.8132

SECTION ( 1)BODY FLAP UPPER DEPENDENT VARIABLE CP

| X/LB | 1.0180 | 1.0460 |
|---|---|---|
| PHI | | |
| .000 | -.2501 | -.2570 |
| 40.000 | -.2799 | -.3107 |

ALPHA ( 2) = .041 BETA ( 4) = 4.251 MACH = .59622 Q = 593.85 P = 2386.3 RN/L = 4.8132

SECTION ( 1)BODY FLAP UPPER DEPENDENT VARIABLE CP

| X/LB | 1.0180 | 1.0460 |
|---|---|---|
| PHI | | |
| .000 | -.2615 | -.2738 |
| 40.000 | -.2893 | -.3068 |

AMES 11-073(OA148) -140A/B/C/R ORB BODY FLAP UP (XE8F32)

ALPHA ( 2) = .035 BETA ( 5) = 8.312 MACH = .59622 Q = 593.85 P = 2386.3 RN/L = 4.8132

SECTION ( 1)BODY FLAP UPPER DEPENDENT VARIABLE CP

| X/LB | 1.0180 | 1.0460 |
|---|---|---|
| PHI | | |
| .000 | -.2874 | -.2697 |
| 40.000 | -.2960 | -.3267 |

ALPHA ( 3) = 4.014 BETA ( 1) = -7.879 MACH = .59602 Q = 593.50 P = 2386.4 RN/L = 4.8147

SECTION ( 1)BODY FLAP UPPER DEPENDENT VARIABLE CP

| X/LB | 1.0180 | 1.0460 |
|---|---|---|
| PHI | | |
| .000 | -.2369 | -.2416 |
| 40.000 | -.2565 | -.2865 |

ALPHA ( 3) = 4.016 BETA ( 2) = -3.855 MACH = .59602 Q = 593.50 P = 2386.4 RN/L = 4.8147

SECTION ( 1)BODY FLAP UPPER DEPENDENT VARIABLE CP

| X/LB | 1.0180 | 1.0460 |
|---|---|---|
| PHI | | |
| .000 | -.2478 | -.2475 |
| 40.000 | -.2691 | -.3013 |

ALPHA ( 3) = 4.015 BETA ( 3) = .196 MACH = .59602 Q = 593.50 P = 2386.4 RN/L = 4.8147

SECTION ( 1)BODY FLAP UPPER DEPENDENT VARIABLE CP

| X/LB | 1.0180 | 1.0460 |
|---|---|---|
| PHI | | |
| .000 | -.2604 | -.2817 |
| 40.000 | -.2789 | -.3035 |

ALPHA ( 3) = 4.015 BETA ( 4) = 4.243 MACH = .59602 Q = 593.50 P = 2386.4 RN/L = 4.8147

SECTION ( 1)BODY FLAP UPPER DEPENDENT VARIABLE CP

| X/LB | 1.0180 | 1.0460 |
|---|---|---|
| PHI | | |
| .000 | -.2743 | -.2890 |
| 40.000 | -.2996 | -.3185 |

AMES 11-073(OA148) -140A/B/C/R ORB BODY FLAP UP (XEBF32)

ALPHA ( 3) = 4.018 BETA ( 5) = 8.295 MACH = .59602 Q = 593.50 P = 2386.4 RN/L = 4.8147

SECTION ( 1)BODY FLAP UPPER DEPENDENT VARIABLE CP

| X/LB | 1.0180 | 1.0460 |
|---|---|---|
| PHI | | |
| .000 | -.2701 | -.2760 |
| 40.000 | -.2997 | -.3155 |

ALPHA ( 4) = 8.080 BETA ( 1) = -7.877 MACH = .59636 Q = 594.21 P = 2386.7 RN/L = 4.8181

SECTION ( 1)BODY FLAP UPPER DEPENDENT VARIABLE CP

| X/LB | 1.0180 | 1.0460 |
|---|---|---|
| PHI | | |
| .000 | -.2422 | -.2507 |
| 40.000 | -.2670 | -.3005 |

ALPHA ( 4) = 8.089 BETA ( 2) = -3.848 MACH = .59636 Q = 594.21 P = 2386.7 RN/L = 4.8181

SECTION ( 1)BODY FLAP UPPER DEPENDENT VARIABLE CP

| X/LB | 1.0180 | 1.0460 |
|---|---|---|
| PHI | | |
| .000 | -.2511 | -.2709 |
| 40.000 | -.2589 | -.2771 |

ALPHA ( 4) = 8.087 BETA ( 3) = .188 MACH = .59636 Q = 594.21 P = 2386.7 RN/L = 4.8181

SECTION ( 1)BODY FLAP UPPER DEPENDENT VARIABLE CP

| X/LB | 1.0180 | 1.0460 |
|---|---|---|
| PHI | | |
| .000 | -.2627 | -.2799 |
| 40.000 | -.2717 | -.2965 |

ALPHA ( 4) = 8.086 BETA ( 4) = 4.243 MACH = .59636 Q = 594.21 P = 2386.7 RN/L = 4.8181

SECTION ( 1)BODY FLAP UPPER DEPENDENT VARIABLE CP

| X/LB | 1.0180 | 1.0460 |
|---|---|---|
| PHI | | |
| .000 | -.2718 | -.3001 |
| 40.000 | -.2963 | -.3178 |

AMES 11-073(OA148) -140A/B/C/R ORB BODY FLAP UP (XE8F32)

ALPHA ( 4) = 8.082 BETA ( 5) = 8.301 MACH = .59636 Q = 594.21 P = 2386.7 RN/L = 4.8181

SECTION ( 1)BODY FLAP UPPER DEPENDENT VARIABLE CP

| X/LB | 1.0190 | 1.0460 |
|---|---|---|
| PHI | | |
| .000 | -.2822 | -.2864 |
| 40.000 | -.3084 | -.3337 |

ALPHA ( 5) = 12.017 BETA ( 1) = -7.830 MACH = .59626 Q = 593.97 P = 2386.7 RN/L = 4.8175

SECTION ( 1)BODY FLAP UPPER DEPENDENT VARIABLE CP

| X/LB | 1.0180 | 1.0460 |
|---|---|---|
| PHI | | |
| .000 | -.2428 | -.2690 |
| 40.000 | -.2699 | -.2959 |

ALPHA ( 5) = 12.037 BETA ( 2) = -3.825 MACH = .59626 Q = 593.97 P = 2386.7 RN/L = 4.8175

SECTION ( 1)BODY FLAP UPPER DEPENDENT VARIABLE CP

| X/LB | 1.0180 | 1.0460 |
|---|---|---|
| PHI | | |
| .000 | -.2592 | -.2573 |
| 40.000 | -.2651 | -.2954 |

ALPHA ( 5) = 12.038 BETA ( 3) = .185 MACH = .59626 Q = 593.97 P = 2386.7 RN/L = 4.8175

SECTION ( 1)BODY FLAP UPPER DEPENDENT VARIABLE CP

| X/LB | 1.0180 | 1.0460 |
|---|---|---|
| PHI | | |
| .000 | -.2462 | -.2533 |
| 40.000 | -.2512 | -.2774 |

ALPHA ( 5) = 12.033 BETA ( 4) = 4.256 MACH = .59626 Q = 593.97 P = 2386.7 RN/L = 4.8175

SECTION ( 1)BODY FLAP UPPER DEPENDENT VARIABLE CP

| X/LB | 1.0180 | 1.0460 |
|---|---|---|
| PHI | | |
| .000 | -.2565 | -.2759 |
| 40.000 | -.2728 | -.3135 |

DATE 13 FEB 76 TABULATED PRESSURE DATA - OA148 ( AMES 11-073-1 )

AMES 11-073(OA148) -140A/B/C/R ORB BODY FLAP UP (XEBF32)

ALPHA ( 5) = 12.024 BETA ( 5) = 8.318 MACH = .59626 Q = 593.97 P = 2386.7 RN/L = 4.8175

SECTION ( 1)BODY FLAP UPPER DEPENDENT VARIABLE CP

| X/LB | 1.0180 | 1.0460 |
|---|---|---|
| PHI | | |
| .000 | -.2447 | -.2676 |
| 40.000 | -.2951 | -.3312 |

AMES 11-073(OA148) -140A/B/C/R ORB BODY FLAP UP (XEBF33) ( 05 AUG 75 )

REFERENCE DATA

SREF = 2690.0000 SQ.FT. XMRP = 1076.6800 IN. XO
LREF = 474.0000 IN. YMRP = .0000 IN. YO
BREF = 936.0680 IN. ZMRP = 375.0000 IN. ZO
SCALE = 1.0300

PARAMETRIC DATA

RUDDER = 10.000 SPDBRK = 35.000
BDFLAP = 16.300 L-ELVN = .000
R-ELVN = 10.000 MACH = 1.400

ALPHA ( 1) = -4.110 BETA ( 1) = -3.848 MACH = 1.3952 Q = 599.12 P = 439.71 RN/L = 2.9D43

SECTION ( 1)BODY FLAP UPPER DEPENDENT VARIABLE CP

| X/LB | 1.0180 | 1.0460 |
|---|---|---|
| PHI | | |
| .000 | -.3236 | -.3224 |
| 40.000 | -.3458 | -.3544 |

ALPHA ( 1) = -4.105 BETA ( 2) = .195 MACH = 1.3952 Q = 599.12 P = 439.71 RN/L = 2.9D43

SECTION ( 1)BODY FLAP UPPER DEPENDENT VARIABLE CP

| X/LB | 1.0180 | 1.0460 |
|---|---|---|
| PHI | | |
| .000 | -.3168 | -.3163 |
| 40.000 | -.3452 | -.3582 |

ALPHA ( 1) = -4.114 BETA ( 3) = 4.277 MACH = 1.3952 Q = 599.12 P = 439.71 RN/L = 2.9D43

SECTION ( 1)BODY FLAP UPPER DEPENDENT VARIABLE CP

| X/LB | 1.0180 | 1.0460 |
|---|---|---|
| PHI | | |
| .000 | -.3297 | -.3238 |
| 40.000 | -.3638 | -.3702 |

ALPHA ( 2) = -.049 BETA ( 1) = -3.866 MACH = 1.3944 Q = 599.11 P = 440.18 RN/L = 2.9D98

SECTION ( 1)BODY FLAP UPPER DEPENDENT VARIABLE CP

| X/LB | 1.0180 | 1.0460 |
|---|---|---|
| PHI | | |
| .000 | -.3326 | -.3445 |
| 40.000 | -.3296 | -.3393 |

AMES 11-073(OA148) -140A/B/C/R ORB BODY FLAP UP (XEBF33)

ALPHA ( 2) = -.046 BETA ( 2) = .181 MACH = 1.3944 Q = 599.11 P = 440.18 RN/L = 2.9098

SECTION ( 1)BODY FLAP UPPER DEPENDENT VARIABLE CP

| X/LB | 1.0180 | 1.0460 |
|---|---|---|
| PHI | | |
| .000 | -.3256 | -.3334 |
| 40.000 | -.3249 | -.3355 |

ALPHA ( 2) = -.050 BETA ( 3) = 4.256 MACH = 1.3944 Q = 599.11 P = 440.18 RN/L = 2.9098

SECTION ( 1)BODY FLAP UPPER DEPENDENT VARIABLE CP

| X/LB | 1.0180 | 1.0460 |
|---|---|---|
| PHI | | |
| .000 | -.3369 | -.3402 |
| 40.000 | -.3265 | -.3376 |

ALPHA ( 3) = 3.895 BETA ( 1) = -3.869 MACH = 1.3948 Q = 599.42 P = 440.18 RN/L = 2.9147

SECTION ( 1)BODY FLAP UPPER DEPENDENT VARIABLE CP

| X/LB | 1.0180 | 1.0460 |
|---|---|---|
| PHI | | |
| .000 | -.3443 | -.3533 |
| 40.000 | -.3370 | -.3424 |

ALPHA ( 3) = 3.895 BETA ( 2) = .190 MACH = 1.3948 Q = 599.42 P = 440.18 RN/L = 2.9147

SECTION ( 1)BODY FLAP UPPER DEPENDENT VARIABLE CP

| X/LB | 1.0180 | 1.0460 |
|---|---|---|
| PHI | | |
| .000 | -.3374 | -.3447 |
| 40.000 | -.3213 | -.3255 |

ALPHA ( 3) = 3.896 BETA ( 3) = 4.246 MACH = 1.3948 Q = 599.42 P = 440.18 RN/L = 2.9147

SECTION ( 1)BODY FLAP UPPER DEPENDENT VARIABLE CP

| X/LB | 1.0180 | 1.0460 |
|---|---|---|
| PHI | | |
| .000 | -.3391 | -.3505 |
| 40.000 | -.3224 | -.3328 |

AMES 11-073(OA148) -140A/B/C/R ORB BODY FLAP UP (XEBF33)

ALPHA ( 4) = 7.947 BETA ( 1) = -3.865 MACH = 1.3944 Q = 599.72 P = 440.65 RN/L = 2.9145

SECTION ( 1)BODY FLAP UPPER DEPENDENT VARIABLE CP

| X/LB | 1.0180 | 1.0460 |
|---|---|---|
| PHI | | |
| .000 | -.3462 | -.3471 |
| 40.000 | -.3632 | -.3752 |

ALPHA ( 4) = 7.946 BETA ( 2) = .185 MACH = 1.3944 Q = 599.72 P = 440.65 RN/L = 2.9146

SECTION ( 1)BODY FLAP UPPER DEPENDENT VARIABLE CP

| X/LB | 1.0180 | 1.0460 |
|---|---|---|
| PHI | | |
| .000 | -.3486 | -.3512 |
| 40.000 | -.3349 | -.3460 |

ALPHA ( 4) = 7.944 BETA ( 3) = 4.238 MACH = 1.3944 Q = 599.72 P = 440.65 RN/L = 2.9146

SECTION ( 1)BODY FLAP UPPER DEPENDENT VARIABLE CP

| X/LB | 1.0180 | 1.0460 |
|---|---|---|
| PHI | | |
| .000 | -.3481 | -.3500 |
| 40.000 | -.3346 | -.3426 |

ALPHA ( 5) = 11.859 BETA ( 1) = -3.851 MACH = 1.3955 Q = 599.73 P = 439.[illegible] RN/L = 2.9121

SECTION ( 1)BODY FLAP UPPER DEPENDENT VARIABLE CP

| X/LB | 1.0180 | 1.0460 |
|---|---|---|
| PHI | | |
| .000 | -.3580 | -.3725 |
| 40.000 | -.3749 | -.3907 |

ALPHA ( 5) = 11.865 BETA ( 2) = .189 MACH = 1.3955 Q = 599.73 P = 439.94 RN/L = 2.9121

SECTION ( 1)BODY FLAP UPPER DEPENDENT VARIABLE CP

| X/LB | 1.0180 | 1.0460 |
|---|---|---|
| PHI | | |
| .000 | -.3491 | -.3519 |
| 40.000 | -.3651 | -.3851 |

ORIGINAL PAGE IS
OF POOR QUALITY

AMES 11-073(OA148) -140A/B/C/R ORB BODY FLAP UP (XE8F33)

ALPHA ( 5) = 11.860 BETA ( 3) = 4.253 MACH = 1.3955 Q = 599.73 P = 439.94 RN/L = 2.9121

SECTION ( 1)BODY FLAP UPPER DEPENDENT VARIABLE CP

| X/LB | 1.0180 | 1.0460 |
|---|---|---|
| PHI | | |
| .000 | -.3588 | -.3548 |
| 40.000 | -.3633 | -.3838 |

ALPHA ( 6) = 15.949 BETA ( 1) = -3.830 MACH = 1.3950 Q = 599.93 P = 440.41 RN/L = 2.9147

SECTION ( 1)BODY FLAP UPPER DEPENDENT VARIABLE CP

| X/LB | 1.0180 | 1.0460 |
|---|---|---|
| PHI | | |
| .000 | -.3782 | -.3815 |
| 40.000 | -.3867 | -.4089 |

ALPHA ( 6) = 15.859 BETA ( 2) = .186 MACH = 1.3950 Q = 599.93 P = 440.41 RN/L = 2.9147

SECTION ( 1)BODY FLAP UPPER DEPENDENT VARIABLE CP

| X/LB | 1.0180 | 1.0460 |
|---|---|---|
| PHI | | |
| .000 | -.3794 | -.3771 |
| 40.000 | -.3981 | -.4100 |

ALPHA ( 6) = 15.851 BETA ( 3) = 4.283 MACH = 1.3950 Q = 599.93 P = 440.41 RN/L = 2.9147

SECTION ( 1)BODY FLAP UPPER DEPENDENT VARIABLE CP

| X/LB | 1.0180 | 1.0460 |
|---|---|---|
| PHI | | |
| .000 | -.3832 | -.3881 |
| 40.000 | -.3957 | -.4082 |

AMES 11-073(OA148) -140A/B/C/R ORB BODY FLAP UP (XEBF34) ( 05 AUG 75 )

REFERENCE DATA

SREF = 2690.0000 SQ.FT. XMRP = 1076.6800 IN. XO
LREF = 474.8000 IN. YMRP = .0000 IN. YO
BREF = 936.0000 IN. ZMRP = 375.0000 IN. ZO
SCALE = .0300

PARAMETRIC DATA

RUDDER = 10.000 SPDBRK = 35.000
BDFLAP = 16.300 L-ELVN = .000
R-ELVN = 10.000 MACH = 1.250

ALPHA ( 1) = -4.064 BETA ( 1) = -3.845 MACH = 1.2480 Q = 600.05 P = 550.40 RN/L = 3.0174

SECTION ( 1)BODY FLAP UPPER DEPENDENT VARIABLE CP

| X/LB | 1.0180 | 1.0460 |
|---|---|---|
| PHI | | |
| .000 | -.3649 | -.3640 |
| 40.000 | -.3808 | -.3907 |

ALPHA ( 1) = -4.041 BETA ( 2) = .192 MACH = 1.2480 Q = 600.05 P = 550.40 RN/L = 3.0174

SECTION ( 1)BODY FLAP UPPER DEPENDENT VARIABLE CP

| X/LB | 1.0180 | 1.0460 |
|---|---|---|
| PHI | | |
| .000 | -.3524 | -.3572 |
| 40.000 | -.3723 | -.3831 |

ALPHA ( 1) = -4.051 BETA ( 3) = 4.275 MACH = 1.2480 Q = 600.05 P = 550.40 RN/L = 3.0174

SECTION ( 1)BODY FLAP UPPER DEPENDENT VARIABLE CP

| X/LB | 1.0180 | 1.0460 |
|---|---|---|
| PHI | | |
| .000 | -.3658 | -.3774 |
| 40.000 | -.3682 | -.3824 |

ALPHA ( 2) = -.032 BETA ( 1) = -3.867 MACH = 1.2476 Q = 600.19 P = 550.87 RN/L = 3.0137

SECTION ( 1)BODY FLAP UPPER DEPENDENT VARIABLE CP

| X/LB | 1.0180 | 1.0460 |
|---|---|---|
| PHI | | |
| .000 | -.3788 | -.3885 |
| 40.000 | -.3653 | -.3738 |

AMES 11-073(OA148) -140A/B/C/R ORB BODY FLAP UP (XEBF34)

ALPHA ( 2) = -.029 BETA ( 2) = .184 MACH = 1.2476 Q = 600.19 P = 550.87 RN/L = 3.0137

SECTION ( 1)BODY FLAP UPPER DEPENDENT VARIABLE CP

| X/LB | 1.0180 | 1.0460 |
|---|---|---|
| PHI | | |
| .000 | -.3693 | -.3773 |
| 40.000 | -.3594 | -.3712 |

ALPHA ( 2) = -.035 BETA ( 3) = 4.251 MACH = 1.2476 Q = 600.19 P = 550.87 RN/L = 3.0137

SECTION ( 1)BODY FLAP UPPER DEPENDENT VARIABLE CP

| X/LB | 1.0180 | 1.0460 |
|---|---|---|
| PHI | | |
| .000 | -.3863 | -.3979 |
| 40.000 | -.3528 | -.3629 |

ALPHA ( 3) = 3.926 BETA ( 1) = -3.871 MACH = 1.2463 Q = 599.48 P = 551.33 RN/L = 3.0145

SECTION ( 1)BODY FLAP UPPER DEPENDENT VARIABLE CP

| X/LB | 1.0180 | 1.0460 |
|---|---|---|
| PHI | | |
| .000 | -.3873 | -.3916 |
| 40.000 | -.3783 | -.3854 |

ALPHA ( 3) = 3.924 BETA ( 2) = .180 MACH = 1.2463 Q = 599.48 P = 551.33 RN/L = 3.0145

SECTION ( 1)BODY FLAP UPPER DEPENDENT VARIABLE CP

| X/LB | 1.0180 | 1.0460 |
|---|---|---|
| PHI | | |
| .000 | -.3866 | -.3946 |
| 40.000 | -.3646 | -.3695 |

ALPHA ( 3) = 3.934 BETA ( 3) = 4.244 MACH = 1.2463 Q = 599.48 P = 551.33 RN/L = 3.0145

SECTION ( 1)BODY FLAP UPPER DEPENDENT VARIABLE CP

| X/LB | 1.0180 | 1.0460 |
|---|---|---|
| PHI | | |
| .000 | -.3898 | -.4039 |
| 40.000 | -.3583 | -.3680 |

AMES 11-073(OA148) -140A/B/C/R ORB BODY FLAP UP (XE8F34)

ALPHA ( 4) = 7.988 BETA ( 1) = -3.866 MACH = 1.2474 Q = 600.07 P = 550.87 RN/L = 3.0135

SECTION ( 1)BODY FLAP UPPER DEPENDENT VARIABLE CP

| X/LB | 1.0180 | 1.0460 |
|---|---|---|
| PHI | | |
| .000 | -.3873 | -.3859 |
| 40.000 | -.4041 | -.4211 |

ALPHA ( 4) = 7.987 BETA ( 2) = .186 MACH = 1.2474 Q = 600.07 P = 550.87 RN/L = 3.0135

SECTION ( 1)BODY FLAP UPPER DEPENDENT VARIABLE CP

| X/LB | 1.0180 | 1.0460 |
|---|---|---|
| PHI | | |
| .000 | -.3849 | -.3918 |
| 40.000 | -.3894 | -.4131 |

ALPHA ( 4) = 7.988 BETA ( 3) = 4.237 MACH = 1.2474 Q = 600.07 P = 550.87 RN/L = 3.0135

SECTION ( 1)BODY FLAP UPPER DEPENDENT VARIABLE CP

| X/LB | 1.0180 | 1.0460 |
|---|---|---|
| PHI | | |
| .000 | -.4070 | -.4176 |
| 40.000 | -.3768 | -.3950 |

ALPHA ( 5) = 11.921 BETA ( 1) = -3.850 MACH = 1.2455 Q = 599.75 P = 552.28 RN/L = 3.0144

SECTION ( 1)BODY FLAP UPPER DEPENDENT VARIABLE CP

| X/LB | 1.0180 | 1.0460 |
|---|---|---|
| PHI | | |
| .000 | -.4036 | -.4067 |
| 40.000 | -.4166 | -.4278 |

ALPHA ( 5) = 11.932 BETA ( 2) = .189 MACH = 1.2455 Q = 599.75 P = 552.28 RN/L = 3.0144

SECTION ( 1)BODY FLAP UPPER DEPENDENT VARIABLE CP

| X/LB | 1.0180 | 1.0460 |
|---|---|---|
| PHI | | |
| .000 | -.3917 | -.3934 |
| 40.000 | -.4090 | -.4383 |

AMES 11-073(OA14B) -140A/B/C/R ORB BODY FLAP UP (XEBF34)

ALPHA ( 5) = 11.924 BETA ( 3) = 4.253 MACH = 1.2455 Q = 599.75 P = 552.28 RN/L = 3.0144

SECTION ( 1)BODY FLAP UPPER DEPENDENT VARIABLE CP

| X/LB | 1.0180 | 1.0460 |
|---|---|---|
| PHI | | |
| .000 | -.3948 | -.4081 |
| 40.000 | -.4123 | -.4495 |

AMES 11-073(OA148) -140A/B/C/R ORB BODY FLAP UP (XE8F35) ( 05 AUG 75 )

REFERENCE DATA

SREF = 2690.0000 SQ.FT. XMRP = 1076.6800 IN. XO
LREF = 474.8000 IN. YMRP = .0000 IN. YO
BREF = 936.0680 IN. ZMRP = 375.0000 IN. ZO
SCALE = .0300

PARAMETRIC DATA

RUDDER = 10.000 SPDBRK = 35.000
BDFLAP = 16.300 L-ELVN = .000
R-ELVN = 10.000 MACH = 1.100

ALPHA ( 1) = -4.064 BETA ( 1) = -3.846 MACH = 1.1012 Q = 599.90 P = 706.74 RN/L = 3.1771

SECTION ( 1)BODY FLAP UPPER DEPENDENT VARIABLE CP

| X/LB | 1.0180 | 1.0460 |
|---|---|---|
| PHI | | |
| .000 | -.4180 | -.4218 |
| 40.000 | -.4064 | -.4135 |

ALPHA ( 1) = -4.062 BETA ( 2) = .195 MACH = 1.1012 Q = 599.90 P = 706.74 RN/L = 3.1771

SECTION ( 1)BODY FLAP UPPER DEPENDENT VARIABLE CP

| X/LB | 1.0180 | 1.0460 |
|---|---|---|
| PHI | | |
| .000 | -.4216 | -.4316 |
| 40.000 | -.3989 | -.4096 |

ALPHA ( 1) = -4.062 BETA ( 3) = 4.274 MACH = 1.1012 Q = 599.90 P = 706.74 RN/L = 3.1771

SECTION ( 1)BODY FLAP UPPER DEPENDENT VARIABLE CP

| X/LB | 1.0180 | 1.0460 |
|---|---|---|
| PHI | | |
| .000 | -.4291 | -.4436 |
| 40.000 | -.3977 | -.4045 |

ALPHA ( 2) = -.023 BETA ( 1) = -3.863 MACH = 1.0993 Q = 599.08 P = 708.12 RN/L = 3.1793

SECTION ( 1)BODY FLAP UPPER DEPENDENT VARIABLE CP

| X/LB | 1.0180 | 1.0460 |
|---|---|---|
| PHI | | |
| .000 | -.4189 | -.4282 |
| 40.000 | -.4064 | -.4121 |

AMES 11-073(OA148) -140A/B/C/R ORB BODY FLAP UP (XEBF35)

ALPHA ( 2) = -.020 BETA ( 2) = .185 MACH = 1.0993 Q = 599.08 P = 708.12 RN/L = 3.1793

SECTION ( 1)BODY FLAP UPPER DEPENDENT VARIABLE CP

| X/LB | 1.0180 | 1.0460 |
|---|---|---|
| PHI | | |
| .000 | -.4067 | -.4188 |
| 40.000 | -.4008 | -.4147 |

ALPHA ( 2) = -.024 BETA ( 3) = 4.249 MACH = 1.0993 Q = 599.08 P = 708.12 RN/L = 3.1793

SECTION ( 1)BODY FLAP UPPER DEPENDENT VARIABLE CP

| X/LB | 1.0180 | 1.0460 |
|---|---|---|
| PHI | | |
| .000 | -.4281 | -.4376 |
| 40.000 | -.3846 | -.3988 |

ALPHA ( 3) = 3.952 BETA ( 1) = -3.863 MACH = 1.0983 Q = 598.70 P = 709.06 RN/L = 3.1785

SECTION ( 1)BODY FLAP UPPER DEPENDENT VARIABLE CP

| X/LB | 1.0180 | 1.0460 |
|---|---|---|
| PHI | | |
| .000 | -.4143 | -.4242 |
| 40.000 | -.4174 | -.4294 |

ALPHA ( 3) = 3.952 BETA ( 2) = .189 MACH = 1.0983 Q = 598.70 P = 709.06 RN/L = 3.1785

SECTION ( 1)BODY FLAP UPPER DEPENDENT VARIABLE CP

| X/LB | 1.0180 | 1.0460 |
|---|---|---|
| PHI | | |
| .000 | -.4047 | -.4080 |
| 40.000 | -.4186 | -.4397 |

ALPHA ( 3) = 3.960 BETA ( 3) = 4.243 MACH = 1.0983 Q = 598.70 P = 709.06 RN/L = 3.1785

SECTION ( 1)BODY FLAP UPPER DEPENDENT VARIABLE CP

| X/LB | 1.0180 | 1.0460 |
|---|---|---|
| PHI | | |
| .000 | -.4155 | -.4248 |
| 40.000 | -.4122 | -.4364 |

AMES 11-073(OA148) -140A/B/C/R ORB BODY FLAP UP (XEBF35)

ALPHA ( 4) = 8.030 BETA ( 1) = -3.862 MACH = 1.0987 Q = 598.57 P = 708.35 RN/L = 3.1769

SECTION ( 1)BODY FLAP UPPER DEPENDENT VARIABLE CP

| X/LB | 1.0180 | 1.0460 |
|---|---|---|
| PHI | | |
| .000 | -.4357 | -.4381 |
| 40.000 | -.4544 | -.4693 |

ALPHA ( 4) = 8.038 BETA ( 2) = .183 MACH = 1.0987 Q = 598.57 P = 708.35 RN/L = 3.1769

SECTION ( 1)BODY FLAP UPPER DEPENDENT VARIABLE CP

| X/LB | 1.0180 | 1.0460 |
|---|---|---|
| PHI | | |
| .000 | -.4199 | -.4214 |
| 40.000 | -.4332 | -.4614 |

ALPHA ( 4) = 8.037 BETA ( 3) = 4.237 MACH = 1.0987 Q = 598.57 P = 708.35 RN/L = 3.1769

SECTION ( 1)BODY FLAP UPPER DEPENDENT VARIABLE CP

| X/LB | 1.0180 | 1.0460 |
|---|---|---|
| PHI | | |
| .000 | -.4451 | -.4466 |
| 40.000 | -.4435 | -.4774 |

ALPHA ( 5) = 11.975 BETA ( 1) = -3.842 MACH = 1.0987 Q = 598.75 P = 708.59 RN/L = 3.1753

SECTION ( 1)BODY FLAP UPPER DEPENDENT VARIABLE CP

| X/LB | 1.0180 | 1.0460 |
|---|---|---|
| PHI | | |
| .000 | -.4592 | -.4686 |
| 40.000 | -.4776 | -.4937 |

ALPHA ( 5) = 11.985 BETA ( 2) = .188 MACH = 1.0987 Q = 598.75 P = 708.59 RN/L = 3.1753

SECTION ( 1)BODY FLAP UPPER DEPENDENT VARIABLE CP

| X/LB | 1.0180 | 1.0460 |
|---|---|---|
| PHI | | |
| .000 | -.4318 | -.4403 |
| 40.000 | -.4476 | -.4822 |

ORIGINAL PAGE IS OF POOR QUALITY

AMES 11-073(OA148) -140A/B/C/R ORB BODY FLAP UP (XEBF3S)

ALPHA ( 5) = 11.981 BETA ( 3) = 4.246 MACH = 1.0987 Q = 598.75 P = 708.59 RN/L = 3.1753

SECTION ( 1)BODY FLAP UPPER DEPENDENT VARIABLE CP

| X/LB | 1.0180 | 1.0460 |
|---|---|---|
| PHI | | |
| .000 | -.4513 | -.4581 |
| 40.000 | -.4423 | -.4844 |

AMES 11-073(OA148) -140A/B/C/R ORB BODY FLAP UP (XE8F36) ( 05 AUG 75 )

REFERENCE DATA

SREF = 2690.0000 SQ.FT. XMRP = 1076.6800 IN. XO
LREF = 474.8000 IN. YMRP = .0000 IN. YO
BREF = 936.0680 IN. ZMRP = 375.0000 IN. ZO
SCALE = .0300

PARAMETRIC DATA

RUDDER = 10.000 SPDBRK = 35.000
BDFLAP = 16.300 L-ELVN = .000
R-ELVN = 10.000 MACH = .900

ALPHA ( 1) = -4.063 BETA ( 1) = -3.844 MACH = .90163 Q = 601.33 P = 1056.6 RN/L = 3.5806

SECTION ( 1)BODY FLAP UPPER DEPENDENT VARIABLE CP

| X/LB | 1.0180 | 1.0460 |
|---|---|---|
| PHI | | |
| .000 | -.3078 | -.3167 |
| 40.000 | -.3075 | -.3441 |

ALPHA ( 1) = -4.055 BETA ( 2) = .194 MACH = .90163 Q = 601.33 P = 1056.6 RN/L = 3.5806

SECTION ( 1)BODY FLAP UPPER DEPENDENT VARIABLE CP

| X/LB | 1.0180 | 1.0460 |
|---|---|---|
| PHI | | |
| .000 | -.3062 | -.3057 |
| 40.000 | -.3053 | -.3211 |

ALPHA ( 1) = -4.060 BETA ( 3) = 4.272 MACH = .90163 Q = 601.33 P = 1056.6 RN/L = 3.5806

SECTION ( 1)BODY FLAP UPPER DEPENDENT VARIABLE CP

| X/LB | 1.0180 | 1.0460 |
|---|---|---|
| PHI | | |
| .000 | -.2964 | -.2864 |
| 40.000 | -.2991 | -.3175 |

ALPHA ( 2) = .042 BETA ( 1) = -3.866 MACH = .90027 Q = 600.16 P = 1057.8 RN/L = 3.5774

SECTION ( 1)BODY FLAP UPPER DEPENDENT VARIABLE CP

| X/LB | 1.0180 | 1.0460 |
|---|---|---|
| PHI | | |
| .000 | -.3172 | -.3191 |
| 40.000 | -.3054 | -.3208 |

AMES 11-073(OA148) -140A/B/C/R ORB BODY FLAP UP (XEBF36)

ALPHA ( 2) = .092 BETA ( 2) = .183 MACH = .90027 Q = 600.16 P = 1057.8 RN/L = 3.5774

SECTION ( 1)BODY FLAP UPPER DEPENDENT VARIABLE CP

| X/LB | 1.0180 | 1.0460 |
|---|---|---|
| PHI | | |
| .000 | -.2975 | -.3100 |
| 40.000 | -.2784 | -.2897 |

ALPHA ( 2) = .085 BETA ( 3) = 4.248 MACH = .90027 Q = 600.16 P = 1057.8 RN/L = 3.5774

SECTION ( 1)BODY FLAP UPPER DEPENDENT VARIABLE CP

| X/LB | 1.0180 | 1.0460 |
|---|---|---|
| PHI | | |
| .000 | -.2981 | -.3040 |
| 40.000 | -.2863 | -.2998 |

ALPHA ( 3) = 3.973 BETA ( 1) = -3.873 MACH = .89927 Q = 599.24 P = 1058.5 RN/L = 3.5740

SECTION ( 1)BODY FLAP UPPER DEPENDENT VARIABLE CP

| X/LB | 1.0180 | 1.0460 |
|---|---|---|
| PHI | | |
| .000 | -.3146 | -.3169 |
| 40.000 | -.3002 | -.3032 |

ALPHA ( 3) = 3.981 BETA ( 2) = .185 MACH = .89927 Q = 599.24 P = 1058.5 RN/L = 3.5740

SECTION ( 1)BODY FLAP UPPER DEPENDENT VARIABLE CP

| X/LB | 1.0180 | 1.0460 |
|---|---|---|
| PHI | | |
| .000 | -.3030 | -.3177 |
| 40.000 | -.2767 | -.2739 |

ALPHA ( 3) = 3.986 BETA ( 3) = 4.242 MACH = .89927 Q = 599.24 P = 1058.5 RN/L = 3.5740

SECTION ( 1)BODY FLAP UPPER DEPENDENT VARIABLE CP

| X/LB | 1.0180 | 1.0460 |
|---|---|---|
| PHI | | |
| .000 | -.2959 | -.3136 |
| 40.000 | -.2642 | -.2736 |

AMES 11-073(OA148) -140A/B/C/R ORB BODY FLAP UP (XEBF36)

ALPHA ( 4) = 8.050 BETA ( 1) = -3.862 MACH = .89970 Q = 599.92 P = 1058.7 RN/L = 3.5781

SECTION ( 1)BODY FLAP UPPER DEPENDENT VARIABLE CP

| X/LB | 1.0180 | 1.0460 |
|---|---|---|
| PHI | | |
| .000 | -.3156 | -.3229 |
| 40.000 | -.2960 | -.3026 |

ALPHA ( 4) = 8.064 BETA ( 2) = .184 MACH = .89970 Q = 599.92 P = 1058.7 RN/L = 3.5781

SECTION ( 1)BODY FLAP UPPER DEPENDENT VARIABLE CP

| X/LB | 1.0180 | 1.0460 |
|---|---|---|
| PHI | | |
| .000 | -.3057 | -.3128 |
| 40.000 | -.2710 | -.2750 |

ALPHA ( 4) = 8.051 BETA ( 3) = 4.239 MACH = .89970 Q = 599.92 P = 1058.7 RN/L = 3.5781

SECTION ( 1)BODY FLAP UPPER DEPENDENT VARIABLE CP

| X/LB | 1.0180 | 1.0460 |
|---|---|---|
| PHI | | |
| .000 | -.2991 | -.3077 |
| 40.000 | -.2523 | -.2719 |

ALPHA ( 5) = 11.931 BETA ( 1) = -3.854 MACH = .89977 Q = 600.28 P = 1059.2 RN/L = 3.5829

SECTION ( 1)BODY FLAP UPPER DEPENDENT VARIABLE CP

| X/LB | 1.0180 | 1.0460 |
|---|---|---|
| PHI | | |
| .000 | -.2949 | -.3031 |
| 40.000 | -.3161 | -.3272 |

ALPHA ( 5) = 11.945 BETA ( 2) = .188 MACH = .89977 Q = 600.28 P = 1059.2 RN/L = 3.5829

SECTION ( 1)BODY FLAP UPPER DEPENDENT VARIABLE CP

| X/LB | 1.0180 | 1.0460 |
|---|---|---|
| PHI | | |
| .000 | -.2843 | -.2843 |
| 40.000 | -.2938 | -.3103 |

AMES 11-073(OA148) -140A/B/C/R ORB BODY FLAP UP (XEBF36)

ALPHA ( 5) = 11.935 BETA ( 3) = 4.259 MACH = .89977 Q = 600.28 P = 1059.2 RN/L = 3.5829

SECTION ( 11)BODY FLAP UPPER DEPENDENT VARIABLE CP

| X/LB | 1.0180 | 1.0460 |
|---|---|---|
| PHI | | |
| .000 | -.2871 | -.2976 |
| 40.000 | -.2667 | -.3250 |

AMES 11-073(OA148) -140A/B/C/R ORB BODY FLAP UP (XE9F37) ( 05 AUG 75 )

REFERENCE DATA

SREF = 2690.0000 SQ.FT. XMRP = 1076.6800 IN. XO
LREF = 474.8000 IN. YMRP = .0000 IN. YO
BREF = 936.0620 IN. ZMRP = 375.0000 IN. ZO
SCALE = .0300

PARAMETRIC DATA

RUDDER = 10.000 SPOBRK = 35.000
BDFLAP = 16.300 L-ELVN = .000
R-ELVN = 10.000 MACH = .600

ALPHA ( 1) = -4.041 BETA ( 1) = -7.848 MACH = .59694 Q = 595.14 P = 2385.8 RN/L = 4.8726

SECTION ( 1)BODY FLAP UPPER DEPENDENT VARIABLE CP

| X/LB | 1.0180 | 1.0460 |
|---|---|---|
| PHI | | |
| .000 | -.2555 | -.2662 |
| 40.000 | -.2535 | -.2962 |

ALPHA ( 1) = -4.025 BETA ( 2) = -3.846 MACH = .59694 Q = 595.14 P = 2385.8 RN/L = 4.8726

SECTION ( 1)BODY FLAP UPPER DEPENDENT VARIABLE CP

| X/LB | 1.0180 | 1.0460 |
|---|---|---|
| PHI | | |
| .000 | -.2495 | -.2718 |
| 40.000 | -.2595 | -.2911 |

ALPHA ( 1) = -3.896 BETA ( 3) = .184 MACH = .59694 Q = 595.14 P = 2385.8 RN/L = 4.8726

SECTION ( 1)BODY FLAP UPPER DEPENDENT VARIABLE CP

| X/LB | 1.0180 | 1.0460 |
|---|---|---|
| PHI | | |
| .000 | -.2291 | -.2330 |
| 40.000 | -.2573 | -.3050 |

ALPHA ( 1) = -3.930 BETA ( 4) = 4.266 MACH = .59694 Q = 595.14 P = 2385.8 RN/L = 4.8726

SECTION ( 1)BODY FLAP UPPER DEPENDENT VARIABLE CP

| X/LB | 1.0180 | 1.0460 |
|---|---|---|
| PHI | | |
| .000 | -.2362 | -.2423 |
| 40.000 | -.2737 | -.2945 |

AMES 11-073(OA148) -140A/B/C/R ORB BODY FLAP UP (XEBF37)

ALPHA ( 1) = -3.946 BETA ( 5) = 8.339 MACH = .59694 Q = 595.14 P = 2385.8 RN/L = 4.8726

SECTION ( 1)BODY FLAP UPPER DEPENDENT VARIABLE CP

| X/LB | 1.0180 | 1.0460 |
|---|---|---|
| PHI | | |
| .000 | -.2356 | -.2507 |
| 40.000 | -.2818 | -.2978 |

ALPHA ( 2) = .030 BETA ( 1) = -7.898 MACH = .59652 Q = 594.31 P = 2385.8 RN/L = 4.8794

SECTION ( 1)BODY FLAP UPPER DEPENDENT VARIABLE CP

| X/LB | 1.0180 | 1.0460 |
|---|---|---|
| PHI | | |
| .000 | -.2804 | -.2842 |
| 40.000 | -.2649 | -.2786 |

ALPHA ( 2) = .040 BETA ( 2) = -3.863 MACH = .59652 Q = 594.31 P = 2385.8 RN/L = 4.8794

SECTION ( 1)BODY FLAP UPPER DEPENDENT VARIABLE CP

| X/LB | 1.0180 | 1.0460 |
|---|---|---|
| PHI | | |
| .000 | -.2768 | -.2863 |
| 40.000 | -.2440 | -.2622 |

ALPHA ( 2) = .104 BETA ( 3) = .181 MACH = .59652 Q = 594.31 P = 2385.8 RN/L = 4.8794

SECTION ( 1)BODY FLAP UPPER DEPENDENT VARIABLE CP

| X/LB | 1.0180 | 1.0460 |
|---|---|---|
| PHI | | |
| .000 | -.2554 | -.2642 |
| 40.000 | -.2580 | -.2816 |

ALPHA ( 2) = .102 BETA ( 4) = 4.244 MACH = .59652 Q = 594.31 P = 2385.8 RN/L = 4.8794

SECTION ( 1)BODY FLAP UPPER DEPENDENT VARIABLE CP

| X/LB | 1.0180 | 1.0460 |
|---|---|---|
| PHI | | |
| .000 | -.2334 | -.2397 |
| 40.000 | -.2692 | -.2957 |

AMES 11-073(OA148) -140A/B/C/R ORB BODY FLAP UP (XE8F37)

ALPHA ( 2) = .019 BETA ( 5) = 9.303 MACH = .59652 Q = 594.31 P = 2385.8 RN/L = 4.8794

SECTION ( 1)BODY FLAP UPPER DEPENDENT VARIABLE CP

| X/LB | 1.0180 | 1.0460 |
|---|---|---|
| PHI | | |
| .000 | -.2263 | -.2386 |
| 40.000 | -.2776 | -.2948 |

ALPHA ( 3) = 4.036 BETA ( 1) = -7.909 MACH = .59620 Q = 593.73 P = 2386.0 RN/L = 4.8840

SECTION ( 1)BODY FLAP UPPER DEPENDENT VARIABLE CP

| X/LB | 1.0180 | 1.0460 |
|---|---|---|
| PHI | | |
| .000 | -.2284 | -.2967 |
| 40.000 | -.2575 | -.2747 |

ALPHA ( 3) = 4.041 BETA ( 2) = -3.867 MACH = .59620 Q = 593.73 P = 2386.0 RN/L = 4.8840

SECTION ( 1)BODY FLAP UPPER DEPENDENT VARIABLE CP

| X/LB | 1.0180 | 1.0460 |
|---|---|---|
| PHI | | |
| .000 | -.2793 | -.2887 |
| 40.000 | -.2450 | -.2665 |

ALPHA ( 3) = 4.040 BETA ( 3) = .186 MACH = .59620 Q = 593.73 P = 2386.0 RN/L = 4.8840

SECTION ( 1)BODY FLAP UPPER DEPENDENT VARIABLE CP

| X/LB | 1.0180 | 1.0460 |
|---|---|---|
| PHI | | |
| .000 | -.2595 | -.2715 |
| 40.000 | -.2415 | -.2649 |

ALPHA ( 3) = 4.044 BETA ( 4) = 4.237 MACH = .59620 Q = 593.73 P = 2386.0 RN/L = 4.8840

SECTION ( 1)BODY FLAP UPPER DEPENDENT VARIABLE CP

| X/LB | 1.0180 | 1.0460 |
|---|---|---|
| PHI | | |
| .000 | -.2327 | -.2526 |
| 40.000 | -.2534 | -.2825 |

AMES 11-073(OA148) -140A/B/C/R ORB BODY FLAP UP (XEBF37)

ALPHA ( 3) = 4.049 BETA ( 5) = 8.284 MACH = .59620 Q = 593.73 P = 2386.0 RN/L = 4.8840

SECTION ( 1)BODY FLAP UPPER DEPENDENT VARIABLE CP

| X/LB | 1.0180 | 1.0460 |
|---|---|---|
| PHI | | |
| .000 | -.2364 | -.2388 |
| 40.000 | -.2513 | -.2819 |

ALPHA ( 4) = 7.972 BETA ( 1) = -7.894 MACH = .59666 Q = 594.55 P = 2385.8 RN/L = 4.8889

SECTION ( 1)BODY FLAP UPPER DEPENDENT VARIABLE CP

| X/LB | 1.0180 | 1.0460 |
|---|---|---|
| PHI | | |
| .000 | -.2849 | -.3061 |
| 40.000 | -.2584 | -.2768 |

ALPHA ( 4) = 7.984 BETA ( 2) = -3.864 MACH = .59666 Q = 594.55 P = 2385.8 RN/L = 4.8889

SECTION ( 1)BODY FLAP UPPER DEPENDENT VARIABLE CP

| X/LB | 1.0180 | 1.0460 |
|---|---|---|
| PHI | | |
| .000 | -.2596 | -.2787 |
| 40.000 | -.2572 | -.2780 |

ALPHA ( 4) = 7.990 BETA ( 3) = .171 MACH = .59666 Q = 594.55 P = 2385.8 RN/L = 4.8889

SECTION ( 1)BODY FLAP UPPER DEPENDENT VARIABLE CP

| X/LB | 1.0180 | 1.0460 |
|---|---|---|
| PHI | | |
| .000 | -.2505 | -.2628 |
| 40.000 | -.2371 | -.2560 |

ALPHA ( 4) = 7.990 BETA ( 4) = 4.234 MACH = .59666 Q = 594.55 P = 2385.8 RN/L = 4.8889

SECTION ( 1)BODY FLAP UPPER DEPENDENT VARIABLE CP

| X/LB | 1.0180 | 1.0460 |
|---|---|---|
| PHI | | |
| .000 | -.2467 | -.2635 |
| 40.000 | -.2274 | -.2529 |

AMES 11-073(OA148) -140A/B/C/R ORB BODY FLAP UP (XE8F37)

ALPHA ( 4) = 7.988 BETA ( 5) = 8.288 MACH = .59666 Q = 594.55 P = 2385.8 RN/L = 4.8889

SECTION ( 1)BODY FLAP UPPER DEPENDENT VARIABLE CP

| X/LB | 1.0180 | 1.0460 |
|---|---|---|
| PHI | | |
| .000 | -.2387 | -.2524 |
| 40.000 | -.2524 | -.2869 |

ALPHA ( 5) = 11.959 BETA ( 1) = -7.860 MACH = .59676 Q = 594.79 P = 2385.8 RN/L = 4.8888

SECTION ( 1)BODY FLAP UPPER DEPENDENT VARIABLE CP

| X/LB | 1.0180 | 1.0460 |
|---|---|---|
| PHI | | |
| .000 | -.2477 | -.2534 |
| 40.000 | -.2836 | -.3122 |

ALPHA ( 5) = 11.981 BETA ( 2) = -3.846 MACH = .59676 Q = 594.79 P = 2385.8 RN/L = 4.8888

SECTION ( 1)BODY FLAP UPPER DEPENDENT VARIABLE CP

| X/LB | 1.0180 | 1.0460 |
|---|---|---|
| PHI | | |
| .000 | -.2436 | -.2542 |
| 40.000 | -.2648 | -.2804 |

ALPHA ( 5) = 11.991 BETA ( 3) = .172 MACH = .59676 Q = 594.79 P = 2385.8 RN/L = 4.8888

SECTION ( 1)BODY FLAP UPPER DEPENDENT VARIABLE CP

| X/LB | 1.0180 | 1.0460 |
|---|---|---|
| PHI | | |
| .000 | -.2419 | -.2625 |
| 40.000 | -.2443 | -.2642 |

ALPHA ( 5) = 11.985 BETA ( 4) = 4.243 MACH = .59676 Q = 594.79 P = 2385.8 RN/L = 4.8888

SECTION ( 1)BODY FLAP UPPER DEPENDENT VARIABLE CP

| X/LB | 1.0180 | 1.0460 |
|---|---|---|
| PHI | | |
| .000 | -.2474 | -.2684 |
| 40.000 | -.2462 | -.2722 |

ORIGINAL PAGE IS
OF POOR QUALITY

AMES 11-073(OA148) -140A/B/C/R ORB BODY FLAP UP (XEBF37)

ALPHA ( 5) = 11.975 BETA ( 5) = 8.313 MACH = .59676 Q = 594.79 P = 2385.8 RN/L = 4.8888

SECTION ( 1)BODY FLAP UPPER DEPENDENT VARIABLE CP

| X/LB | 1.0180 | 1.0460 |
|---|---|---|
| PHI | | |
| .000 | -.2397 | -.2541 |
| 40.000 | -.2428 | -.2862 |

AMES 11-073(OA148) -140A/B/C/R ORB BODY FLAP UP (XE8F38) ( 05 AUG 75 )

REFERENCE DATA

SREF = 2590.0000 SQ.FT. XMRP = 1076.6600 IN. XO
LREF = 474.8000 IN. YMRP = .0000 IN. YO
BREF = 936.0690 IN. ZMRP = 375.0000 IN. ZO
SCALE = .0300

PARAMETRIC DATA

RUDDER = 10.000 SPDBRK = 85.000
BDFLAP = 16.300 L-ELVN = 10.000
R-ELVN = 10.000 MACH = 1.400

ALPHA ( 1) = -4.002 BETA ( 1) = -3.853 MACH = 1.3931 Q = 600.20 P = 441.83 RN/L = 2.9112

SECTION ( 1)BODY FLAP UPPER DEPENDENT VARIABLE CP

| X/LB | 1.0180 | 1.0460 |
|---|---|---|
| PHI | | |
| .000 | -.3115 | -.3055 |
| 40.000 | -.3178 | -.3220 |

ALPHA ( 1) = -3.940 BETA ( 2) = .193 MACH = 1.3931 Q = 600.20 P = 441.83 RN/L = 2.9112

SECTION ( 1)BODY FLAP UPPER DEPENDENT VARIABLE CP

| X/LB | 1.0180 | 1.0460 |
|---|---|---|
| PHI | | |
| .000 | -.3093 | -.3043 |
| 40.000 | -.3363 | -.3505 |

ALPHA ( 1) = -3.950 BETA ( 3) = 4.276 MACH = 1.3931 Q = 600.20 P = 441.83 RN/L = 2.9112

SECTION ( 1)BODY FLAP UPPER DEPENDENT VARIABLE CP

| X/LB | 1.0180 | 1.0460 |
|---|---|---|
| PHI | | |
| .000 | -.3228 | -.3173 |
| 40.000 | -.3483 | -.3644 |

ALPHA ( 2) = .030 BETA ( 1) = -3.869 MACH = 1.3931 Q = 599.59 P = 441.36 RN/L = 2.9073

SECTION ( 1)BODY FLAP UPPER DEPENDENT VARIABLE CP

| X/LB | 1.0180 | 1.0460 |
|---|---|---|
| PHI | | |
| .000 | -.3237 | -.3252 |
| 40.000 | -.3425 | -.3536 |

AMES 11-073(OA148) -140A/B/C/R ORB BODY FLAP UP (XE8F38)

ALPHA ( 2) = .036 BETA ( 2) = .183 MACH = 1.3931 Q = 599.59 P = 441.36 RN/L = 2.9073

SECTION ( 1)BODY FLAP UPPER DEPENDENT VARIABLE CP

| X/LB | 1.0180 | 1.0460 |
|---|---|---|
| PHI | | |
| .000 | -.3203 | -.3208 |
| 40.000 | -.3423 | -.3558 |

ALPHA ( 2) = .034 BETA ( 3) = 4.255 MACH = 1.3931 Q = 599.59 P = 441.36 RN/L = 2.9073

SECTION ( 1)BODY FLAP UPPER DEPENDENT VARIABLE CP

| X/LB | 1.0180 | 1.0460 |
|---|---|---|
| PHI | | |
| .000 | -.3261 | -.3282 |
| 40.000 | -.3478 | -.3548 |

ALPHA ( 3) = 3.894 BETA ( 1) = -3.872 MACH = 1.3932 Q = 599.70 P = 441.36 RN/L = 2.9108

SECTION ( 1)BODY FLAP UPPER DEPENDENT VARIABLE CP

| X/LB | 1.0180 | 1.0460 |
|---|---|---|
| PHI | | |
| .000 | -.3324 | -.3284 |
| 40.000 | -.3560 | -.3678 |

ALPHA ( 3) = 3.895 BETA ( 2) = .183 MACH = 1.3932 Q = 599.70 P = 441.36 RN/L = 2.9108

SECTION ( 1)BODY FLAP UPPER DEPENDENT VARIABLE CP

| X/LB | 1.0180 | 1.0460 |
|---|---|---|
| PHI | | |
| .000 | -.3240 | -.3256 |
| 40.000 | -.3415 | -.3562 |

ALPHA ( 3) = 3.906 BETA ( 3) = 4.246 MACH = 1.3932 Q = 599.70 P = 441.36 RN/L = 2.9108

SECTION ( 1)BODY FLAP UPPER DEPENDENT VARIABLE CP

| X/LB | 1.0180 | 1.0460 |
|---|---|---|
| PHI | | |
| .000 | -.3334 | -.3365 |
| 40.000 | -.3429 | -.3564 |

AMES 11-073(OA148) -140A/B/C/R ORB BODY FLAP UP (XEBF38)

ALPHA ( 4) = 7.922 BETA ( 1) = -3.861 MACH = 1.3932 Q = 599.39 P = 441.12 RN/L = 2.9102

SECTION ( 1)BODY FLAP UPPER DEPENDENT VARIABLE CP

| X/LB | 1.0180 | 1.0460 |
|---|---|---|
| PHI | | |
| .000 | -.3514 | -.3533 |
| 40.000 | -.3634 | -.3566 |

ALPHA ( 4) = 7.892 BETA ( 2) = .182 MACH = 1.3932 Q = 599.39 P = 441.12 RN/L = 2.9102

SECTION ( 1)BODY FLAP UPPER DEPENDENT VARIABLE CP

| X/LB | 1.0180 | 1.0460 |
|---|---|---|
| PHI | | |
| .000 | -.3286 | -.3314 |
| 40.000 | -.3553 | -.3721 |

ALPHA ( 4) = 7.830 BETA ( 3) = 4.245 MACH = 1.3932 Q = 599.39 P = 441.12 RN/L = 2.9102

SECTION ( 1)BODY FLAP UPPER DEPENDENT VARIABLE CP

| X/LB | 1.0180 | 1.0460 |
|---|---|---|
| PHI | | |
| .000 | -.3588 | -.3581 |
| 40.000 | -.3446 | -.3557 |

ALPHA ( 5) = 11.870 BETA ( 1) = -3.851 MACH = 1.3941 Q = 600.12 P = 441.12 RN/L = 2.9072

SECTION ( 1)BODY FLAP UPPER DEPENDENT VARIABLE CP

| X/LB | 1.0180 | 1.0460 |
|---|---|---|
| PHI | | |
| .000 | -.3546 | -.3612 |
| 40.000 | -.3737 | -.3926 |

ALPHA ( 5) = 11.880 BETA ( 2) = .187 MACH = 1.3941 Q = 600.12 P = 441.12 RN/L = 2.9072

SECTION ( 1)BODY FLAP UPPER DEPENDENT VARIABLE CP

| X/LB | 1.0180 | 1.0460 |
|---|---|---|
| PHI | | |
| .000 | -.3461 | -.3472 |
| 40.000 | -.3707 | -.3877 |

AMES 11-073(OA148) -140A/B/C/R ORB BODY FLAP UP (XE8F38)

ALPHA ( 5) = 11.873 BETA ( 3) = 4.255 MACH = 1.3941 Q = 600.12 P = 441.12 RN/L = 2.9072

SECTION ( 1)BODY FLAP UPPER DEPENDENT VARIABLE CP

| X/LB | 1.0180 | 1.0460 |
|---|---|---|
| PHI | | |
| .000 | -.3783 | -.3844 |
| 40.000 | -.3494 | -.3700 |

ALPHA ( 6) = 15.853 BETA ( 1) = -3.829 MACH = 1.3929 Q = 599.99 P = 441.82 RN/L = 2.9183

SECTION ( 1)BODY FLAP UPPER DEPENDENT VARIABLE CP

| X/LB | 1.0180 | 1.0460 |
|---|---|---|
| PHI | | |
| .000 | -.3484 | -.3553 |
| 40.000 | -.3719 | -.3830 |

ALPHA ( 6) = 15.866 BETA ( 2) = .185 MACH = 1.3929 Q = 599.99 P = 441.82 RN/L = 2.9183

SECTION ( 1)BODY FLAP UPPER DEPENDENT VARIABLE CP

| X/LB | 1.0180 | 1.0460 |
|---|---|---|
| PHI | | |
| .000 | -.3644 | -.3772 |
| 40.000 | -.3694 | -.3985 |

ALPHA ( 6) = 15.858 BETA ( 3) = 4.285 MACH = 1.3929 Q = 599.99 P = 441.82 RN/L = 2.9183

SECTION ( 1)BODY FLAP UPPER DEPENDENT VARIABLE CP

| X/LB | 1.0180 | 1.0460 |
|---|---|---|
| PHI | | |
| .000 | -.3851 | -.3867 |
| 40.000 | -.3700 | -.3896 |

AMES 11-073(OA148) -140A/B/C/R ORB BODY FLAP UP (XEBF39) ( 05 AUG 75 )

REFERENCE DATA

SREF = 2690.0000 SQ.FT. XMRP = 1076.6800 IN. XO
LREF = 474.8000 IN. YMRP = .0000 IN. YO
BREF = 936.0580 IN. ZMRP = 375.0000 IN. ZO
SCALE = .0300

PARAMETRIC DATA

RUDDER = 10.000 SPDBRK = 85.000
BDFLAP = 16.300 L-ELVN = 10.000
R-ELVN = 10.000 MACH = 1.250

ALPHA ( 1) = -3.991 BETA ( 1) = -3.847 MACH = 1.2464 Q = 599.79 P = 551.57 RN/L = 3.0146

SECTION ( 1)BODY FLAP UPPER DEPENDENT VARIABLE CP

| X/LB | 1.0180 | 1.0460 |
|---|---|---|
| PHI | | |
| .000 | -.3815 | -.3658 |
| 40.000 | -.3752 | -.3847 |

ALPHA ( 1) = -3.979 BETA ( 2) = .190 MACH = 1.2464 Q = 599.79 P = 551.57 RN/L = 3.0146

SECTION ( 1)BODY FLAP UPPER DEPENDENT VARIABLE CP

| X/LB | 1.0180 | 1.0460 |
|---|---|---|
| PHI | | |
| .000 | -.3461 | -.3463 |
| 40.000 | -.3715 | -.3990 |

ALPHA ( 1) = -3.988 BETA ( 3) = 4.277 MACH = 1.2464 Q = 599.79 P = 551.57 RN/L = 3.0146

SECTION ( 1)BODY FLAP UPPER DEPENDENT VARIABLE CP

| X/LB | 1.0180 | 1.0460 |
|---|---|---|
| PHI | | |
| .000 | -.3636 | -.3673 |
| 40.000 | -.3957 | -.4219 |

ALPHA ( 2) = .058 BETA ( 1) = -3.858 MACH = 1.2469 Q = 599.66 P = 551.10 RN/L = 3.0101

SECTION ( 1)BODY FLAP UPPER DEPENDENT VARIABLE CP

| X/LB | 1.0180 | 1.0460 |
|---|---|---|
| PHI | | |
| .000 | -.3579 | -.3662 |
| 40.000 | -.3721 | -.3929 |

AMES 11-073(OA148) -140A/B/C/R ORB BODY FLAP UP (XEBF39)

ALPHA ( 2) = .062 BETA ( 2) = .177 MACH = 1.2468 Q = 599.66 P = 551.10 RN/L = 3.0101

SECTION ( 1)BODY FLAP UPPER DEPENDENT VARIABLE CP

| X/LB | 1.0180 | 1.0460 |
|---|---|---|
| PHI | | |
| .000 | -.3444 | -.3539 |
| 40.000 | -.3749 | -.3981 |

ALPHA ( 2) = .021 BETA ( 3) = 4.254 MACH = 1.2468 Q = 599.68 P = 551.10 RN/L = 3.0101

SECTION ( 1)BODY FLAP UPPER DEPENDENT VARIABLE CP

| X/LB | 1.0180 | 1.0460 |
|---|---|---|
| PHI | | |
| .000 | -.3334 | -.3698 |
| 40.000 | -.3963 | -.4221 |

ALPHA ( 3) = 3.934 BETA ( 1) = -3.873 MACH = 1.2469 Q = 599.77 P = 551.10 RN/L = 3.0099

SECTION ( 1)BODY FLAP UPPER DEPENDENT VARIABLE CP

| X/LB | 1.0180 | 1.0460 |
|---|---|---|
| PHI | | |
| .000 | -.3727 | -.3767 |
| 40.000 | -.3999 | -.4184 |

ALPHA ( 3) = 3.935 BETA ( 2) = .189 MACH = 1.2469 Q = 599.77 P = 551.10 RN/L = 3.0099

SECTION ( 1)BODY FLAP UPPER DEPENDENT VARIABLE CP

| X/LB | 1.0180 | 1.0460 |
|---|---|---|
| PHI | | |
| .000 | -.3644 | -.3781 |
| 40.000 | -.3937 | -.4221 |

ALPHA ( 3) = 3.939 BETA ( 3) = 4.242 MACH = 1.2469 Q = 599.77 P = 551.10 RN/L = 3.0099

SECTION ( 1)BODY FLAP UPPER DEPENDENT VARIABLE CP

| X/LB | 1.0180 | 1.0460 |
|---|---|---|
| PHI | | |
| .000 | -.3747 | -.3813 |
| 40.000 | -.3977 | -.4220 |

AMES 11-073(OA148) -140A/B/C/R ORB BODY FLAP UP (XEBF39)

ALPHA ( 4) = 7.936 BETA ( 1) = -3.863 MACH = 1.2467 Q = 599.84 P = 551.34 RN/L = 3.0131

SECTION ( 1)BODY FLAP UPPER DEPENDENT VARIABLE CP

| X/LB | 1.0180 | 1.0460 |
|---|---|---|
| PHI | | |
| .000 | -.4028 | -.4090 |
| 40.000 | -.4217 | -.4262 |

ALPHA ( 4) = 7.897 BETA ( 2) = .182 MACH = 1.2467 Q = 599.84 P = 551.34 RN/L = 3.0131

SECTION ( 1)BODY FLAP UPPER DEPENDENT VARIABLE CP

| X/LB | 1.0180 | 1.0460 |
|---|---|---|
| PHI | | |
| .000 | -.3886 | -.3886 |
| 40.000 | -.4241 | -.4433 |

ALPHA ( 4) = 7.878 BETA ( 3) = 4.243 MACH = 1.2467 Q = 599.84 P = 551.34 RN/L = 3.0131

SECTION ( 1)BODY FLAP UPPER DEPENDENT VARIABLE CP

| X/LB | 1.0180 | 1.0460 |
|---|---|---|
| PHI | | |
| .000 | -.4146 | -.4186 |
| 40.000 | -.4110 | -.4285 |

ALPHA ( 5) = 11.869 BETA ( 1) = -3.849 MACH = 1.2475 Q = 600.06 P = 550.87 RN/L = 3.0127

SECTION ( 1)BODY FLAP UPPER DEPENDENT VARIABLE CP

| X/LB | 1.0180 | 1.0460 |
|---|---|---|
| PHI | | |
| .000 | -.4225 | -.4249 |
| 40.000 | -.4272 | -.4294 |

ALPHA ( 5) = 11.810 BETA ( 2) = .187 MACH = 1.2475 Q = 600.06 P = 550.87 RN/L = 3.0127

SECTION ( 1)BODY FLAP UPPER DEPENDENT VARIABLE CP

| X/LB | 1.0180 | 1.0460 |
|---|---|---|
| PHI | | |
| .000 | -.4078 | -.4002 |
| 40.000 | -.4293 | -.4454 |

DATE 13 FEB 76 TABULATED PRESSURE DATA - OA148 ( AMES 11-073-1 ) PAGE 5576

AMES 11-073(OA148) -140A/B/C/R ORB BODY FLAP UP (XE8F39)

ALPHA ( 5) = 11.866 BETA ( 3) = 4.252 MACH = 1.2475 Q = 600.06 P = 550.87 RN/L = 3.[illegible]27

SECTION ( 1)BODY FLAP UPPER DEPENDENT VARIABLE CP

| X/LB | 1.0180 | 1.0460 |
|---|---|---|
| PHI | | |
| .000 | -.4151 | -.4139 |
| 40.000 | -.4203 | -.4442 |

AMES 11-073(OA148) -140A/B/C/R ORB BODY FLAP UP (XEBFW0) ( 05 AUG 75 )

REFERENCE DATA

SREF = 2690.0000 SQ.FT. XMRP = 1076.6800 IN. XO
LREF = 474.9000 IN. YMRP = .0000 IN. YO
BREF = 936.0680 IN. ZMRP = 375.0000 IN. ZO
SCALE = .0300

PARAMETRIC DATA

RUDDER = 10.000 SPDBRK = 85.000
BDFLAP = 16.300 L-ELVN = 10.000
R-ELVN = 10.000 MACH = 1.100

ALPHA ( 1) = -3.999 BETA ( 1) = -3.842 MACH = 1.1017 Q = 601.11 P = 707.47 RN/L = 3.1883

SECTION ( 1)BODY FLAP UPPER DEPENDENT VARIABLE CP

| X/LB | 1.0180 | 1.0460 |
|---|---|---|
| PHI | | |
| .000 | -.4257 | -.4153 |
| 40.000 | -.4379 | -.4577 |

ALPHA ( 1) = -3.997 BETA ( 2) = .194 MACH = 1.1017 Q = 601.11 P = 707.47 RN/L = 3.1883

SECTION ( 1)BODY FLAP UPPER DEPENDENT VARIABLE CP

| X/LB | 1.0180 | 1.0460 |
|---|---|---|
| PHI | | |
| .000 | -.4203 | -.4158 |
| 40.000 | -.4279 | -.4599 |

ALPHA ( 1) = -3.996 BETA ( 3) = 4.277 MACH = 1.1017 Q = 601.11 P = 707.47 RN/L = 3.1883

SECTION ( 1)BODY FLAP UPPER DEPENDENT VARIABLE CP

| X/LB | 1.0180 | 1.0460 |
|---|---|---|
| PHI | | |
| .000 | -.4192 | -.4417 |
| 40.000 | -.4571 | -.4105 |

ALPHA ( 2) = .015 BETA ( 1) = -3.867 MACH = 1.1001 Q = 600.08 P = 708.37 RN/L = 3.1860

SECTION ( 1)BODY FLAP UPPER DEPENDENT VARIABLE CP

| X/LB | 1.0180 | 1.0460 |
|---|---|---|
| PHI | | |
| .000 | -.4191 | -.4217 |
| 40.000 | -.4335 | -.4543 |

ORIGINAL PAGE IS
OF POOR QUALITY

AMES 11-073(OA148) -140A/B/C/R ORB BODY FLAP UP (XEBF40)

ALPHA ( 2) = .018 BETA ( 2) = .181 MACH = 1.1001 Q = 600.08 P = 708.37 RN/L = 3.1860

SECTION ( 1)BODY FLAP UPPER DEPENDENT VARIABLE CP

| X/LB | 1.0180 | 1.0460 |
|---|---|---|
| PHI | | |
| .000 | -.3991 | -.4135 |
| 40.000 | -.4236 | -.4631 |

ALPHA ( 2) = .012 BETA ( 3) = 4.250 MACH = 1.1001 Q = 600.08 P = 708.37 RN/L = 3.1860

SECTION ( 1)BODY FLAP UPPER DEPENDENT VARIABLE CP

| X/LB | 1.0180 | 1.0460 |
|---|---|---|
| PHI | | |
| .000 | -.4067 | -.4182 |
| 40.000 | -.4610 | -.4639 |

ALPHA ( 3) = 3.919 BETA ( 1) = -3.865 MACH = 1.1005 Q = 600.31 P = 708.1[illegible] RN/L = 3.1848

SECTION ( 1)BODY FLAP UPPER DEPENDENT VARIABLE CP

| X/LB | 1.0180 | 1.0460 |
|---|---|---|
| PHI | | |
| .000 | -.4146 | -.4316 |
| 40.000 | -.4489 | -.4739 |

ALPHA ( 3) = 3.917 BETA ( 2) = .178 MACH = 1.1005 Q = 600.31 P = 708.14 RN/L = 3.1848

SECTION ( 1)BODY FLAP UPPER DEPENDENT VARIABLE CP

| X/LB | 1.0180 | 1.0460 |
|---|---|---|
| PHI | | |
| .000 | -.4138 | -.4192 |
| 40.000 | -.4518 | -.4814 |

ALPHA ( 3) = 3.924 BETA ( 3) = 4.244 MACH = 1.1005 Q = 600.31 P = 706.14 RN/L = 3.1848

SECTION ( 1)BODY FLAP UPPER DEPENDENT VARIABLE CP

| X/LB | 1.0180 | 1.0460 |
|---|---|---|
| PHI | | |
| .000 | -.4196 | -.4326 |
| 40.000 | -.4605 | -.4832 |

AMES 11-073(OA148) -140A/B/C/R ORB BODY FLAP UP (XEBF40)

ALPHA ( 4) = 7.901 BETA ( 1) = -3.850 MACH = 1.1015 Q = 600.67 P = 707.22 RN/L = 3.1834

SECTION ( 1)BODY FLAP UPPER DEPENDENT VARIABLE CP

| X/LB | 1.0180 | 1.0460 |
|---|---|---|
| PHI | | |
| .000 | -.4534 | -.4732 |
| 40.000 | -.4775 | -.4848 |

ALPHA ( 4) = 7.905 BETA ( 2) = .181 MACH = 1.1015 Q = 600.67 P = 707.22 RN/L = 3.1834

SECTION ( 1)BODY FLAP UPPER DEPENDENT VARIABLE CP

| X/LB | 1.0180 | 1.0460 |
|---|---|---|
| PHI | | |
| .000 | -.4526 | -.4651 |
| 40.000 | -.4755 | -.4658 |

ALPHA ( 4) = 7.904 BETA ( 3) = 4.239 MACH = 1.1015 Q = 600.67 P = 707.22 RN/L = 3.1834

SECTION ( 1)BODY FLAP UPPER DEPENDENT VARIABLE CP

| X/LB | 1.0180 | 1.0460 |
|---|---|---|
| PHI | | |
| .000 | -.4441 | -.4462 |
| 40.000 | -.4824 | -.5088 |

ALPHA ( 5) = 11.906 BETA ( 1) = -3.844 MACH = 1.0995 Q = 600.08 P = 709.07 RN/L = 3.1837

SECTION ( 1)BODY FLAP UPPER DEPENDENT VARIABLE CP

| X/LB | 1.0180 | 1.0460 |
|---|---|---|
| PHI | | |
| .000 | -.4670 | -.4722 |
| 40.000 | -.4807 | -.4937 |

ALPHA ( 5) = 11.808 BETA ( 2) = .188 MACH = 1.0995 Q = 600.08 P = 709.07 RN/L = 3.1837

SECTION ( 1)BODY FLAP UPPER DEPENDENT VARIABLE CP

| X/LB | 1.0180 | 1.0460 |
|---|---|---|
| PHI | | |
| .000 | -.4478 | -.4482 |
| 40.000 | -.4624 | -.4825 |

AMES 11-073(OA148) -140A/B/C/R ORB BODY FLAP UP (XEBF40)

ALPHA ( 5) = 11.865 BETA ( 3) = 4.250 MACH = 1.0995 Q = 600.08 P = 709.07 RN/L = 3.1837

SECTION ( 1)BODY FLAP UPPER DEPENDENT VARIABLE CP

| X/LB | 1.0180 | 1.0460 |
|---|---|---|
| PHI | | |
| .000 | -.4695 | -.4718 |
| 40.000 | -.4600 | -.4841 |

AMES 11-073(OA148) -140A/B/C/R ORB BODY FLAP UP (XE8F41) ( 05 AUG 75 )

REFERENCE DATA

SREF = 2690.0000 SQ.FT. XMRP = 1076.6800 IN. XO
LREF = 474.8000 IN. YMRP = .0000 IN. YO
BREF = 936.0680 IN. ZMRP = 375.0000 IN. ZO
SCALE = .0300

PARAMETRIC DATA

RUDDER = 10.000 SPDBRK = 85.000
BDFLAP = 16.300 L-ELVN = 10.000
R-ELVN = 10.000 MACH = .900

ALPHA ( 1) = -3.997 BETA ( 1) = -3.840 MACH = .89993 Q = 599.67 P = 1057.8 RN/L = 3.5780

SECTION ( 1)BODY FLAP UPPER DEPENDENT VARIABLE CP

| X/LB | 1.0180 | 1.0460 |
|---|---|---|
| PHI | | |
| .000 | -.3621 | -.3481 |
| 40.000 | -.3971 | -.4333 |

ALPHA ( 1) = -3.991 BETA ( 2) = .189 MACH = .89993 Q = 599.67 P = 1057.8 RN/L = 3.5780

SECTION ( 1)BODY FLAP UPPER DEPENDENT VARIABLE CP

| X/LB | 1.0180 | 1.0460 |
|---|---|---|
| PHI | | |
| .000 | -.3549 | -.3377 |
| 40.000 | -.3994 | -.4065 |

ALPHA ( 1) = -3.992 BETA ( 3) = 1.274 MACH = .89993 Q = 599.67 P = 1057.8 RN/L = 3.5780

SECTION ( 1)BODY FLAP UPPER DEPENDENT VARIABLE CP

| X/LB | 1.0180 | 1.0460 |
|---|---|---|
| PHI | | |
| .000 | -.3461 | -.3445 |
| 40.000 | -.3882 | -.3993 |

ALPHA ( 2) = .052 BETA ( 1) = -3.863 MACH = .89853 Q = 598.47 P = 1059.0 RN/L = 3.5741

SECTION ( 1)BODY FLAP UPPER DEPENDENT VARIABLE CP

| X/LB | 1.0180 | 1.0460 |
|---|---|---|
| PHI | | |
| .000 | -.3564 | -.3478 |
| 40.000 | -.3819 | -.3881 |

AMES 11-073(OA148) -140A/B/C/R ORB BODY FLAP UP (XE8F41)

ALPHA ( 2) = .055 BETA ( 2) = .182 MACH = .89853 Q = 598.47 P = 1059.0 RN/L = 3.5741

SECTION ( 1)BODY FLAP UPPER DEPENDENT VARIABLE CP

| X/LB | 1.0180 | 1.0460 |
|---|---|---|
| PHI | | |
| .000 | -.3438 | -.3474 |
| 40.000 | -.3727 | -.3867 |

ALPHA ( 2) = .070 BETA ( 3) = 4.253 MACH = .89853 Q = 598.47 P = 1059.0 RN/L = 3.5741

SECTION ( 1)BODY FLAP UPPER DEPENDENT VARIABLE CP

| X/LB | 1.0180 | 1.0460 |
|---|---|---|
| PHI | | |
| .000 | -.3474 | -.3469 |
| 40.000 | -.3770 | -.3891 |

ALPHA ( 3) = 3.947 BETA ( 1) = -3.868 MACH = .89830 Q = 598.51 P = 1059.5 RN/L = 3.5778

SECTION ( 1)BODY FLAP UPPER DEPENDENT VARIABLE CP

| X/LB | 1.0180 | 1.0460 |
|---|---|---|
| PHI | | |
| .000 | -.3585 | -.3556 |
| 40.000 | -.3722 | -.3890 |

ALPHA ( 3) = 4.018 BETA ( 2) = .184 MACH = .89830 Q = 598.51 P = 1059.5 RN/L = 3.5778

SECTION ( 1)BODY FLAP UPPER DEPENDENT VARIABLE CP

| X/LB | 1.0180 | 1.0460 |
|---|---|---|
| PHI | | |
| .000 | -.3412 | -.3485 |
| 40.000 | -.3599 | -.3793 |

ALPHA ( 3) = 4.018 BETA ( 3) = 4.245 MACH = .89830 Q = 598.51 P = 1059.5 RN/L = 3.5778

SECTION ( 1)BODY FLAP UPPER DEPENDENT VARIABLE CP

| X/LB | 1.0180 | 1.0460 |
|---|---|---|
| PHI | | |
| .000 | -.3466 | -.3494 |
| 40.000 | -.3748 | -.3736 |

AMES 11-073(OA148) -140A/B/C/R ORB BODY FLAP UP (XE8F41)

ALPHA ( 4) = 7.919 BETA ( 1) = -3.861 MACH = .89927 Q = 599.06 P = 1058.3 RN/L = 3.5789

SECTION ( 1)BODY FLAP UPPER DEPENDENT VARIABLE CP

| X/LB | 1.0180 | 1.0460 |
|---|---|---|
| PHI | | |
| .000 | -.3428 | -.3473 |
| 40.000 | -.3755 | -.3852 |

ALPHA ( 4) = 7.925 BETA ( 2) = .181 MACH = .89927 Q = 599.06 P = 1058.3 RN/L = 3.5789

SECTION ( 1)BODY FLAP UPPER DEPENDENT VARIABLE CP

| X/LB | 1.0180 | 1.0460 |
|---|---|---|
| PHI | | |
| .000 | -.3327 | -.3491 |
| 40.000 | -.3607 | -.3846 |

ALPHA ( 4) = 7.877 BETA ( 3) = 4.247 MACH = .89927 Q = 599.06 P = 1058.3 RN/L = 3.5789

SECTION ( 1)BODY FLAP UPPER DEPENDENT VARIABLE CP

| X/LB | 1.0180 | 1.0460 |
|---|---|---|
| PHI | | |
| .000 | -.3378 | -.3482 |
| 40.000 | -.3681 | -.3781 |

ALPHA ( 5) = 11.893 BETA ( 1) = -3.850 MACH = .89863 Q = 598.63 P = 1059.0 RN/L = 3.5769

SECTION ( 1)BODY FLAP UPPER DEPENDENT VARIABLE CP

| X/LB | 1.0180 | 1.0460 |
|---|---|---|
| PHI | | |
| .000 | -.3459 | -.3560 |
| 40.000 | -.3670 | -.3957 |

ALPHA ( 5) = 11.848 BETA ( 2) = .191 MACH = .89863 Q = 598.63 P = 1059.0 RN/L = 3.5769

SECTION ( 1)BODY FLAP UPPER DEPENDENT VARIABLE CP

| X/LB | 1.0180 | 1.0460 |
|---|---|---|
| PHI | | |
| .000 | -.3154 | -.3289 |
| 40.000 | -.3458 | -.3749 |

ORIGINAL PAGE IS
OF POOR QUALITY

AMES 11-073(OA148) -140A/B/C/R ORB BODY FLAP UP (XEBF41)

ALPHA ( 5) = 11.881 BETA ( 3) = 4.259 MACH = .89863 Q = 598.63 P = 1059.0 RN/L = 3.5769

SECTION ( 1)BODY FLAP UPPER DEPENDENT VARIABLE CP

| X/LB | 1.0180 | 1.0460 |
|---|---|---|
| PHI | | |
| .000 | -.3212 | -.3470 |
| 40.000 | -.3406 | -.3804 |

AMES 11-073(OA148) -140A/B/C/R ORB BODY FLAP UP (XE8F42) ( 05 AUG 75 )

REFERENCE DATA

SREF = 2690.0000 SQ.FT. XMRP = 1076.6800 IN. XO
LREF = 474.8000 IN. YMRP = .0000 IN. YO
BREF = 936.0680 IN. ZMRP = 375.0000 IN. ZO
SCALE = .0300

PARAMETRIC DATA

RUDDER = 10.000 SPDBRK = 85.000
BDFLAP = 16.300 L-ELVN = 10.000
R-ELVN = 10.000 MACH = .600

ALPHA ( 1) = -4.049 BETA ( 1) = -7.852 MACH = .59622 Q = 593.85 P = 2386.3 RN/L = 4.8696

SECTION ( 1)BODY FLAP UPPER DEPENDENT VARIABLE CP

| X/LB | 1.0180 | 1.0460 |
|---|---|---|
| PHI | | |
| .000 | -.3230 | -.3375 |
| 40.000 | -.2889 | -.3020 |

ALPHA ( 1) = -3.971 BETA ( 2) = -3.842 MACH = .59622 Q = 593.85 P = 2386.3 RN/L = 4.8696

SECTION ( 1)BODY FLAP UPPER DEPENDENT VARIABLE CP

| X/LB | 1.0180 | 1.0460 |
|---|---|---|
| PHI | | |
| .000 | -.3111 | -.3392 |
| 40.000 | -.2786 | -.3099 |

ALPHA ( 1) = -3.888 BETA ( 3) = .191 MACH = .59622 Q = 593.85 P = 2386.3 RN/L = 4.8696

SECTION ( 1)BODY FLAP UPPER DEPENDENT VARIABLE CP

| X/LB | 1.0180 | 1.0460 |
|---|---|---|
| PHI | | |
| .000 | -.2790 | -.2721 |
| 40.000 | -.3440 | -.3949 |

ALPHA ( 1) = -3.983 BETA ( 4) = 4.273 MACH = .59622 Q = 593.85 P = 2386.3 RN/L = 4.8696

SECTION ( 1)BODY FLAP UPPER DEPENDENT VARIABLE CP

| X/LB | 1.0180 | 1.0460 |
|---|---|---|
| PHI | | |
| .000 | -.3083 | -.3296 |
| 40.000 | -.3533 | -.3938 |

AMES 11-073(OA148) -140A/B/C/R ORB BODY FLAP UP (XE8F42)

ALPHA ( 1) = -3.999 BETA ( 5) = 8.343 MACH = .59622 Q = 593.85 P = 2386.3 RN/L = 4.8696

SECTION ( 1)BODY FLAP UPPER DEPENDENT VARIABLE CP

| X/LB | 1.0180 | 1.0460 |
|---|---|---|
| PHI | | |
| .000 | -.3093 | -.3252 |
| 40.000 | -.3593 | -.3923 |

ALPHA ( 2) = -.003 BETA ( 1) = -7.885 MACH = .59612 Q = 593.61 P = 2386.1 RN/L = 4.8734

SECTION ( 1)BODY FLAP UPPER DEPENDENT VARIABLE CP

| X/LB | 1.0180 | 1.0460 |
|---|---|---|
| PHI | | |
| .000 | -.3245 | -.3381 |
| 40.000 | -.2944 | -.3063 |

ALPHA ( 2) = .104 BETA ( 2) = -3.860 MACH = .59612 Q = 593.61 P = 2386.1 RN/L = 4.8734

SECTION ( 1)BODY FLAP UPPER DEPENDENT VARIABLE CP

| X/LB | 1.0180 | 1.0460 |
|---|---|---|
| PHI | | |
| .000 | -.3231 | -.3499 |
| 40.000 | -.2932 | -.3037 |

ALPHA ( 2) = .114 BETA ( 3) = .190 MACH = .59612 Q = 593.61 P = 2386.1 RN/L = 4.8734

SECTION ( 1)BODY FLAP UPPER DEPENDENT VARIABLE CP

| X/LB | 1.0180 | 1.0460 |
|---|---|---|
| PHI | | |
| .000 | -.2904 | -.2783 |
| 40.000 | -.3304 | -.3892 |

ALPHA ( 2) = .111 BETA ( 4) = 4.251 MACH = .59612 Q = 593.61 P = 2386.1 RN/L = 4.8734

SECTION ( 1)BODY FLAP UPPER DEPENDENT VARIABLE CP

| X/LB | 1.0180 | 1.0460 |
|---|---|---|
| PHI | | |
| .000 | -.3150 | -.3391 |
| 40.000 | -.3576 | -.3850 |

AMES 11-073(OA148) -140A/B/C/R ORB BODY FLAP UP (XEBF42)

ALPHA ( 2) = .040 BETA ( 5) = 8.310 MACH = .59612 Q = 593.61 P = 2386.1 RN/L = 4.8734

SECTION ( 1)BODY FLAP UPPER DEPENDENT VARIABLE CP

| X/LB | 1.0180 | 1.0460 |
|---|---|---|
| PHI | | |
| .000 | -.3200 | -.3320 |
| 40.000 | -.3563 | -.3906 |

ALPHA ( 3) = 4.041 BETA ( 1) = -7.899 MACH = .59674 Q = 594.79 P = 2386.0 RN/L = 4.8833

SECTION ( 1)BODY FLAP UPPER DEPENDENT VARIABLE CP

| X/LB | 1.0180 | 1.0460 |
|---|---|---|
| PHI | | |
| .000 | -.3297 | -.3322 |
| 40.000 | -.2992 | -.31[illegible] |

ALPHA ( 3) = 3.969 BETA ( 2) = -3.860 MACH = .59674 Q = 594.79 P = 2386.0 RN/L = 4.8833

SECTION ( 1)BODY FLAP UPPER DEPENDENT VARIABLE CP

| X/LB | 1.0180 | 1.0460 |
|---|---|---|
| PHI | | |
| .000 | -.3301 | -.3414 |
| 40.000 | -.2925 | -.3171 |

ALPHA ( 3) = 4.049 BETA ( 3) = .193 MACH = .59674 Q = 594.79 P = 2386.0 RN/L = 4.8833

SECTION ( 1)BODY FLAP UPPER DEPENDENT VARIABLE CP

| X/LB | 1.0180 | 1.0460 |
|---|---|---|
| PHI | | |
| .000 | -.2800 | -.2815 |
| 40.000 | -.3190 | -.3724 |

ALPHA ( 3) = 3.947 BETA ( 4) = 4.242 MACH = .59674 Q = 594.79 P = 2386.0 RN/L = 4.8833

SECTION ( 1)BODY FLAP UPPER DEPENDENT VARIABLE CP

| X/LB | 1.0180 | 1.0460 |
|---|---|---|
| PHI | | |
| .000 | -.3156 | -.3416 |
| 40.000 | -.3517 | -.3893 |

AMES 11-073(OA148) -140A/B/C/R ORB BODY FLAP UP (XE8F42)

ALPHA ( 3) = 3.985 BETA ( 5) = 8.292 MACH = .59674 Q = 594.79 P = 2386.0 RN/L = 4.8833

SECTION ( 1)BODY FLAP UPPER DEPENDENT VARIABLE CP

| X/LB | 1.0180 | 1.0460 |
|---|---|---|
| PHI | | |
| .000 | -.3188 | -.3290 |
| 40.000 | -.3585 | -.3932 |

ALPHA ( 4) = 7.905 BETA ( 1) = -7.888 MACH = .59644 Q = 594.20 P = 2386.1 RN/L = 4.8802

SECTION ( 1)BODY FLAP UPPER DEPENDENT VARIABLE CP

| X/LB | 1.0180 | 1.0460 |
|---|---|---|
| PHI | | |
| .000 | -.3400 | -.3599 |
| 40.000 | -.2960 | -.3043 |

ALPHA ( 4) = 7.915 BETA ( 2) = -3.255 MACH = .59644 Q = 594.20 P = 2386.1 RN/L = 4.8802

SECTION ( 1)BODY FLAP UPPER DEPENDENT VARIABLE CP

| X/LB | 1.0180 | 1.0460 |
|---|---|---|
| PHI | | |
| .000 | -.3227 | -.3381 |
| 40.000 | -.2811 | -.3130 |

ALPHA ( 4) = 8.038 BETA ( 3) = .180 MACH = .59644 Q = 594.20 P = 2386.1 RN/L = 4.8802

SECTION ( 1)BODY FLAP UPPER DEPENDENT VARIABLE CP

| X/LB | 1.0180 | 1.0460 |
|---|---|---|
| PHI | | |
| .000 | -.2751 | -.2869 |
| 40.000 | -.3219 | -.3618 |

ALPHA ( 4) = 8.035 BETA ( 4) = 4.244 MACH = .59644 Q = 594.20 P = 2386.1 RN/L = 4.8802

SECTION ( 1)BODY FLAP UPPER DEPENDENT VARIABLE CP

| X/LB | 1.0180 | 1.0460 |
|---|---|---|
| PHI | | |
| .000 | -.3277 | -.3537 |
| 40.000 | -.3565 | -.3738 |

AMES 11-073(OA148) -140A/B/C/R ORB BODY FLAP UP (XEBF42)

ALPHA ( 4) = 8.035 BETA ( 5) = 8.296 MACH = .59644 Q = 594.20 P = 2386.1 RN/L = 4.8802

SECTION ( 1)BODY FLAP UPPER DEPENDENT VARIABLE CP

| X/LB | 1.0180 | 1.0460 |
|---|---|---|
| PHI | | |
| .000 | -.3344 | -.3555 |
| 40.000 | -.3675 | -.3964 |

ALPHA ( 5) = 11.910 BETA ( 1) = -7.853 MACH = .59658 Q = 594.43 P = 2385.8 RN/L = 4.8825

SECTION ( 1)BODY FLAP UPPER DEPENDENT VARIABLE CP

| X/LB | 1.0180 | 1.0460 |
|---|---|---|
| PHI | | |
| .000 | -.2542 | -.2824 |
| 40.000 | -.3219 | -.3607 |

ALPHA ( 5) = 11.930 BETA ( 2) = -3.836 MACH = .59658 Q = 594.43 P = 2385.8 RN/L = 4.8825

SECTION ( 1)BODY FLAP UPPER DEPENDENT VARIABLE CP

| X/LB | 1.0180 | 1.0460 |
|---|---|---|
| PHI | | |
| .000 | -.2801 | -.2915 |
| 40.000 | -.3115 | -.3690 |

ALPHA ( 5) = 11.966 BETA ( 3) = .177 MACH = .59658 Q = 594.43 P = 2385.8 RN/L = 4.8825

SECTION ( 1)BODY FLAP UPPER DEPENDENT VARIABLE CP

| X/LB | 1.0180 | 1.0460 |
|---|---|---|
| PHI | | |
| .000 | -.2655 | -.2854 |
| 40.000 | -.3133 | -.3518 |

ALPHA ( 5) = 11.976 BETA ( 4) = 4.252 MACH = .59658 Q = 594.43 P = 2385.8 RN/L = 4.8825

SECTION ( 1)BODY FLAP UPPER DEPENDENT VARIABLE CP

| X/LB | 1.0180 | 1.0460 |
|---|---|---|
| PHI | | |
| .000 | -.3127 | -.3516 |
| 40.000 | -.3473 | -.3743 |

AMES 11-073(OA148) -140A/B/C/R ORB BODY FLAP UP (XEBFW2)

ALPHA ( 5) = 12.034 BETA ( 5) = 8.318 MACH = .59658 Q = 594.43 P = 2385.8 RN/L = 4.8825

SECTION 1 1)BODY FLAP UPPER DEPENDENT VARIABLE CP

| X/LB | 1.0180 | 1.0460 |
|---|---|---|
| PHI | | |
| .000 | -.3262 | -.3432 |
| 90.000 | -.3458 | -.3640 |

AMES 11-073(OA148) -140A/B/C/R ORB BODY FLAP UP (XE6F43) ( 05 AUG 75 )

REFERENCE DATA

SREF = 2590.0000 SQ.FT. XMRP = 1076.6800 IN. XO
LREF = 474.8000 IN. YMRP = .0000 IN. YO
BREF = 936.0980 IN. ZMRP = 375.0000 IN. ZO
SCALE = .0300

PARAMETRIC DATA

RUDDER = .000 SPDBRK = 55.000
BDFLAP = 22.500 L-ELVN = 10.000
R-ELVN = 10.000 MACH = .900

ALPHA ( 1) = -4.070 BETA ( 1) = -3.850 MACH = .89793 Q = 598.79 P = 1060.9 RN/L = 3.5697

SECTION ( 1)BODY FLAP UPPER DEPENDENT VARIABLE CP

| X/LB | 1.0180 | 1.0460 |
|---|---|---|
| PHI | | |
| .000 | -.3613 | -.3499 |
| 40.000 | -.3874 | -.3522 |

ALPHA ( 1) = -4.069 BETA ( 2) = .187 MACH = .89793 Q = 598.79 P = 1060.9 RN/L = 3.5697

SECTION ( 1)BODY FLAP UPPER DEPENDENT VARIABLE CP

| X/LB | 1.0180 | 1.0460 |
|---|---|---|
| PHI | | |
| .000 | -.3595 | -.3486 |
| 40.000 | -.3701 | -.3483 |

ALPHA ( 1) = -4.078 BETA ( 3) = 4.272 MACH = .89793 Q = 598.79 P = 1060.9 RN/L = 3.5697

SECTION ( 1)BODY FLAP UPPER DEPENDENT VARIABLE CP

| X/LB | 1.0180 | 1.0460 |
|---|---|---|
| PHI | | |
| .000 | -.3566 | -.3521 |
| 40.000 | -.3602 | -.3578 |

ALPHA ( 2) = -.023 BETA ( 1) = -3.865 MACH = .89577 Q = 597.91 P = 1062.1 RN/L = 3.5486

SECTION ( 1)BODY FLAP UPPER DEPENDENT VARIABLE CP

| X/LB | 1.0180 | 1.0460 |
|---|---|---|
| PHI | | |
| .000 | -.3573 | -.3514 |
| 40.000 | -.3663 | -.3383 |

ORIGINAL PAGE IS
OF POOR QUALITY

AMES 11-073(OA148) -140A/B/C/R ORB BODY FLAP UP (XE8F431)

ALPHA ( 2) = -.015 BETA ( 2) = .186 MACH = .89677 Q = 597.91 P = 1062.1 RN/L = 3.6486

SECTION ( 1)BODY FLAP UPPER DEPENDENT VARIABLE CP

| X/LB | 1.0180 | 1.0460 |
|---|---|---|
| PHI | | |
| .000 | -.3383 | -.3359 |
| 40.000 | -.3525 | -.3335 |

ALPHA ( 2) = -.021 BETA ( 3) = 4.247 MACH = .89677 Q = 597.91 P = 1062.1 RN/L = 3.6488

SECTION ( 1)BODY FLAP UPPER DEPENDENT VARIABLE CP

| X/LB | 1.0180 | 1.0460 |
|---|---|---|
| PHI | | |
| .000 | -.3437 | -.3478 |
| 40.000 | -.3565 | -.3418 |

ALPHA ( 3) = 3.931 BETA ( 1) = -3.870 MACH = .89677 Q = 597.91 P = 1062.1 RN/L = 3.6364

SECTION ( 1)BODY FLAP UPPER DEPENDENT VARIABLE CP

| X/LB | 1.0180 | 1.0460 |
|---|---|---|
| PHI | | |
| .000 | -.3501 | -.3513 |
| 40.000 | -.3278 | -.3330 |

ALPHA ( 3) = 3.931 BETA ( 2) = .185 MACH = .89677 Q = 597.91 P = 1062.1 RN/L = 3.6364

SECTION ( 1)BODY FLAP UPPER DEPENDENT VARIABLE CP

| X/LB | 1.0180 | 1.0460 |
|---|---|---|
| PHI | | |
| .000 | -.3395 | -.3412 |
| 40.000 | -.3301 | -.3310 |

ALPHA ( 3) = 3.933 BETA ( 3) = 4.242 MACH = .89677 Q = 597.91 P = 1062.1 RN/L = 3.6364

SECTION ( 1)BODY FLAP UPPER DEPENDENT VARIABLE CP

| X/LB | 1.0180 | 1.0460 |
|---|---|---|
| PHI | | |
| .000 | -.3450 | -.3337 |
| 40.000 | -.3493 | -.3486 |

AMES 11-073(OA148) -140A/B/C/R ORB BODY FLAP UP (XEBF43)

ALPHA ( 4) = 7.998 BETA ( 1) = -3.866 MACH = .89613 Q = 597.48 P = 1062.9 RN/L = 3.6207

SECTION ( 1)BODY FLAP UPPER DEPENDENT VARIABLE CP

| X/LB | 1.0180 | 1.0460 |
|---|---|---|
| PHI | | |
| .000 | -.3565 | -.3446 |
| 40.000 | -.3361 | -.3375 |

ALPHA ( 4) = 8.006 BETA ( 2) = .180 MACH = .89613 Q = 597.48 P = 1062.9 RN/L = 3.6207

SECTION ( 1)BODY FLAP UPPER DEPENDENT VARIABLE CP

| X/LB | 1.0180 | 1.0460 |
|---|---|---|
| PHI | | |
| .000 | -.3522 | -.3479 |
| 40.000 | -.3351 | -.3311 |

ALPHA ( 4) = 8.004 BETA ( 3) = 4.244 MACH = .89613 Q = 597.48 P = 1062.9 RN/L = 3.6207

SECTION ( 1)BODY FLAP UPPER DEPENDENT VARIABLE CP

| X/LB | 1.0180 | 1.0460 |
|---|---|---|
| PHI | | |
| .000 | -.3435 | -.3558 |
| 40.000 | -.3451 | -.3520 |

ALPHA ( 5) = 11.977 BETA ( 1) = -3.853 MACH = .89753 Q = 598.50 P = 1061.4 RN/L = 3.6129

SECTION ( 1)BODY FLAP UPPER DEPENDENT VARIABLE CP

| X/LB | 1.0180 | 1.0460 |
|---|---|---|
| PHI | | |
| .000 | -.3697 | -.3754 |
| 40.000 | -.3833 | -.4086 |

ALPHA ( 5) = 11.988 BETA ( 2) = .182 MACH = .89753 Q = 598.50 P = 1061.4 RN/L = 3.6129

SECTION ( 1)BODY FLAP UPPER DEPENDENT VARIABLE CP

| X/LB | 1.0180 | 1.0460 |
|---|---|---|
| PHI | | |
| .000 | -.3436 | -.3453 |
| 40.000 | -.3602 | -.3853 |

AMES 11-073(OA148) -140A/B/C/R ORB BODY FLAP UP (XEBF43)

ALPHA ( 5) = 11.978 BETA ( 3) = 4.261 MACH = .89753 Q = 598.50 P = 1061.4 RN/L = 3.6129

SECTION ( 1)BODY FLAP UPPER DEPENDENT VARIABLE CP

| X/LB | 1.0180 | 1.0460 |
|---|---|---|
| PHI | | |
| .000 | -.3604 | -.3654 |
| 40.000 | -.3741 | -.3995 |

AMES 11-073(OA148) -140A/B/C/R ORB BODY FLAP UP (XEBF44) ( 05 AUG 75 )

REFERENCE DATA

SREF = 2690.0000 SQ.FT. XMRP = 1076.6800 IN. XO
LREF = 474.8000 IN. YMRP = .0000 IN. YO
BREF = 936.0680 IN. ZMRP = 375.0000 IN. ZO
SCALE = .0300

PARAMETRIC DATA

RUDDER = .000 SPDBRK = 55.000
BDFLAP = 22.500 L-ELVN = 10.000
R-ELVN = 10.000 MACH = .000

ALPHA ( 1) = -4.010 BETA ( 1) = -7.850 MACH = .59610 Q = 593.75 P = 2387.2 RN/L = 4.8840

SECTION ( 1)BODY FLAP UPPER DEPENDENT VARIABLE CP

| X/LB | 1.0180 | 1.0460 |
|---|---|---|
| PHI | | |
| .000 | -.3007 | -.2920 |
| 40.000 | -.3010 | -.3266 |

ALPHA ( 1) = -3.994 BETA ( 2) = -3.842 MACH = .59610 Q = 593.75 P = 2387.2 RN/L = 4.8840

SECTION ( 1)BODY FLAP UPPER DEPENDENT VARIABLE CP

| X/LB | 1.0180 | 1.0460 |
|---|---|---|
| PHI | | |
| .000 | -.2919 | -.2847 |
| 40.000 | -.3014 | -.3230 |

ALPHA ( 1) = -3.985 BETA ( 3) = .188 MACH = .59610 Q = 593.75 P = 2387.2 RN/L = 4.8840

SECTION ( 1)BODY FLAP UPPER DEPENDENT VARIABLE CP

| X/LB | 1.0180 | 1.0460 |
|---|---|---|
| PHI | | |
| .000 | -.2903 | -.2792 |
| 40.000 | -.3045 | -.3277 |

ALPHA ( 1) = -3.992 BETA ( 4) = 4.269 MACH = .59610 Q = 593.75 P = 2387.2 RN/L = 4.8840

SECTION ( 1)BODY FLAP UPPER DEPENDENT VARIABLE CP

| X/LB | 1.0180 | 1.0460 |
|---|---|---|
| PHI | | |
| .000 | -.2821 | -.2738 |
| 40.000 | -.3124 | -.3386 |

AMES 11-073(OA148) -140A/B/C/R ORB BODY FLAP UP (XEBF44)

ALPHA ( 1) = -4.007 BETA ( 5) = 8.349 MACH = .59610 Q = 593.75 P = 2387.2 RN/L = 4.8840

SECTION ( 1)BODY FLAP UPPER DEPENDENT VARIABLE CP

| X/LB | 1.0180 | 1.0460 |
|---|---|---|
| PHI | | |
| .000 | -.2819 | -.2666 |
| 40.000 | -.3252 | -.3504 |

ALPHA ( 2) = .039 BETA ( 1) = -7.886 MACH = .59632 Q = 593.98 P = 2386.1 RN/L = 4.8783

SECTION ( 1)BODY FLAP UPPER DEPENDENT VARIABLE CP

| X/LB | 1.0180 | 1.0460 |
|---|---|---|
| PHI | | |
| .000 | -.3145 | -.3079 |
| 40.000 | -.3112 | -.3079 |

ALPHA ( 2) = .052 BETA ( 2) = -3.866 MACH = .59632 Q = 593.96 P = 2386.1 RN/L = 4.8783

SECTION ( 1)BODY FLAP UPPER DEPENDENT VARIABLE CP

| X/LB | 1.0180 | 1.0460 |
|---|---|---|
| PHI | | |
| .000 | -.3002 | -.3054 |
| 40.000 | -.3012 | -.3175 |

ALPHA ( 2) = .05 BETA ( 3) = .192 MACH = .59632 Q = 593.96 P = 2386.1 RN/L = 4.8783

SECTION ( 1)BODY FLAP UPPER DEPENDENT VARIABLE CP

| X/LB | 1.0180 | 1.0460 |
|---|---|---|
| PHI | | |
| .000 | -.2886 | -.2955 |
| 40.000 | -.2936 | -.3200 |

ALPHA ( 2) = .049 BETA ( 4) = 4.248 MACH = .59632 Q = 593.96 P = 2386.1 RN/L = 4.8783

SECTION ( 1)BODY FLAP UPPER DEPENDENT VARIABLE CP

| X/LB | 1.0180 | 1.0460 |
|---|---|---|
| PHI | | |
| .000 | -.2847 | -.2883 |
| 40.000 | -.3162 | -.3347 |

AMES 11-073(OA148) -140A/B/C/R ORB BODY FLAP UP (XEBF44)

ALPHA ( 2) = .044 BETA ( 5) = 8.307 MACH = .59632 Q = 593.96 P = 2386.1 RN/L = 4.8783

SECTION ( 1)BODY FLAP UPPER DEPENDENT VARIABLE CP

| X/LB | 1.0180 | 1.0460 |
|---|---|---|
| PHI | | |
| .000 | -.2892 | -.2901 |
| 40.000 | -.3322 | -.3516 |

ALPHA ( 3) = 3.960 BETA ( 1) = -7.902 MACH = .59694 Q = 595.02 P = 2385.4 RN/L = 4.8785

SECTION ( 1)BODY FLAP UPPER DEPENDENT VARIABLE CP

| X/LB | 1.0180 | 1.0460 |
|---|---|---|
| PHI | | |
| .000 | -.3192 | -.3263 |
| 40.000 | -.2998 | -.3019 |

ALPHA ( 3) = 3.964 BETA ( 2) = -3.864 MACH = .59694 Q = 595.02 P = 2385.4 RN/L = 4.8785

SECTION ( 1)BODY FLAP UPPER DEPENDENT VARIABLE CP

| X/LB | 1.0180 | 1.0460 |
|---|---|---|
| PHI | | |
| .000 | -.3067 | -.3142 |
| 40.000 | -.3010 | -.3209 |

ALPHA ( 3) = 3.969 BETA ( 3) = .189 MACH = .59694 Q = 595.02 P = 2385.4 RN/L = 4.8785

SECTION ( 1)BODY FLAP UPPER DEPENDENT VARIABLE CP

| X/LB | 1.0180 | 1.0460 |
|---|---|---|
| PHI | | |
| .000 | -.2824 | -.2968 |
| 40.000 | -.2874 | -.3217 |

ALPHA ( 3) = 3.972 BETA ( 4) = 4.243 MACH = .59694 Q = 595.02 P = 2385.4 RN/L = 4.8785

SECTION ( 1)BODY FLAP UPPER DEPENDENT VARIABLE CP

| X/LB | 1.0180 | 1.0460 |
|---|---|---|
| PHI | | |
| .000 | -.2881 | -.2905 |
| 40.000 | -.3169 | -.3380 |

AMES 11-073(OA148) -140A/B/C/R ORB BODY FLAP UP (XEBF44)

ALPHA ( 3) = 3.982 BETA ( 5) = 8.290 MACH = .59694 Q = 595.02 P = 2385.4 RN/L = 4.8785

SECTION ( 1)BODY FLAP UPPER DEPENDENT VARIABLE CP

| X/LB | 1.0180 | 1.0460 |
|---|---|---|
| PHI | | |
| .000 | -.3092 | -.3222 |
| 40.000 | -.3370 | -.3408 |

ALPHA ( 4) = 8.025 BETA ( 1) = -7.890 MACH = .59616 Q = 593.73 P = 2386.3 RN/L = 4.8652

SECTION ( 1)BODY FLAP UPPER DEPENDENT VARIABLE CP

| X/LB | 1.0180 | 1.0460 |
|---|---|---|
| PHI | | |
| .000 | -.3241 | -.3381 |
| 40.000 | -.3092 | -.3030 |

ALPHA ( ) = 8.036 BETA ( 2) = -3.859 MACH = .59616 Q = 593.73 P = 2386.3 RN/L = 4.8652

SECTION ( 1)BODY FLAP UPPER DEPENDENT VARIABLE CP

| X/LB | 1.0180 | 1.0460 |
|---|---|---|
| PHI | | |
| .000 | -.3006 | -.3120 |
| 40.000 | -.2935 | -.3082 |

ALPHA ( 4) = 8.040 BETA ( 3) = .178 MACH = .59616 Q = 593.73 P = 2386.3 RN/L = 4.8652

SECTION ( 1)BODY FLAP UPPER DEPENDENT VARIABLE CP

| X/LB | 1.0180 | 1.0460 |
|---|---|---|
| PHI | | |
| .000 | -.2832 | -.2922 |
| 40.000 | -.2855 | -.3199 |

ALPHA ( 4) = 8.039 BETA ( 4) = 4.241 MACH = .59616 Q = 593.73 P = 2386.3 RN/L = 4.8652

SECTION ( 1)BODY FLAP UPPER DEPENDENT VARIABLE CP

| X/LB | 1.0180 | 1.0460 |
|---|---|---|
| PHI | | |
| .000 | -.2867 | -.2964 |
| 40.000 | -.3172 | -.3335 |

AMES 11-073(OA148) -140A/B/C/R ORB BODY FLAP UP (XE9F44)

ALPHA ( 4) = 8.038 BETA ( 5) = 8.285 MACH = .59616 Q = 593.73 P = 2386.3 RN/L = 4.8652

SECTION ( 1)BODY FLAP UPPER DEPENDENT VARIABLE CP

| X/LB | 1.0180 | 1.0460 |
|---|---|---|
| PHI | | |
| .000 | -.3152 | -.3105 |
| 40.000 | -.3399 | -.3653 |

ALPHA ( 5) = 12.021 BETA ( 1) = -7.852 MACH = .59616 Q = 593.74 P = 2386.7 RN/L = 4.8654

SECTION ( 1)BODY FLAP UPPER DEPENDENT VARIABLE CP

| X/LB | 1.0180 | 1.0460 |
|---|---|---|
| PHI | | |
| .000 | -.2834 | -.2839 |
| 40.000 | -.2917 | -.3297 |

ALPHA ( 5) = 11.932 BETA ( 2) = -3.840 MACH = .59616 Q = 593.74 P = 2386.7 RN/L = 4.8654

SECTION ( 1)BODY FLAP UPPER DEPENDENT VARIABLE CP

| X/LB | 1.0180 | 1.0460 |
|---|---|---|
| PHI | | |
| .000 | -.2985 | -.3039 |
| 40.000 | -.2909 | -.3160 |

ALPHA ( 5) = 11.946 BETA ( 3) = .176 MACH = .59616 Q = 593.74 P = 2386.7 RN/L = 4.8654

SECTION ( 1)BODY FLAP UPPER DEPENDENT VARIABLE CP

| X/LB | 1.0180 | 1.0460 |
|---|---|---|
| PHI | | |
| .000 | -.2770 | -.2930 |
| 40.000 | -.3062 | -.3348 |

ALPHA ( 5) = 11.941 BETA ( 4) = 4.247 MACH = .59616 Q = 593.74 P = 2386.7 RN/L = 4.8654

SECTION ( 1)BODY FLAP UPPER DEPENDENT VARIABLE CP

| X/LB | 1.0180 | 1.0460 |
|---|---|---|
| PHI | | |
| .000 | -.3085 | -.3128 |
| 40.000 | -.3357 | -.3584 |

AMES 11-073(OA148) -140A/B/C/R ORB BODY FLAP UP (XEBF44)

ALPHA ( 5) = 11.928 BETA ( 5) = 8.307 MACH = .59616 Q = 593.74 P = 2386.7 RN/L = 4.8654

SECTION ( 1)BODY FLAP UPPER DEPENDENT VARIABLE CP

| X/LB | 1.0180 | 1.0460 |
|---|---|---|
| PHI | | |
| .000 | -.2895 | -.3029 |
| 40.000 | -.3292 | -.3492 |

AMES 11-073(OA148) -140A/B/C/R ORB BODY FLAP UP (XE8F45) ( 05 AUG 75 )

REFERENCE DATA

SREF = 2690.0000 SQ.FT. XMRP = 1075.6800 IN. XO
LREF = 474.8000 IN. YMRP = .0000 IN. YO
BREF = 935.0680 IN. ZMRP = 375.0000 IN. ZO
SCALE = .0300

PARAMETRIC DATA

RUDDER = .000 SPDBRK = 55.000
BDFLAP = 22.500 L-ELVN = 4.000
R-ELVN = 4.000 MACH = .900

ALPHA ( 1) = -3.961 BETA ( 1) = -3.852 MACH = .89683 Q = 597.89 P = 1061.9 RN/L = 3.6441

SECTION ( 1)BODY FLAP UPPER DEPENDENT VARIABLE CP

| X/LB | 1.0180 | 1.0460 |
|---|---|---|
| PHI | | |
| .000 | -.3616 | -.3466 |
| 40.000 | -.3604 | -.3575 |

ALPHA ( 1) = -3.932 BETA ( 2) = .188 MACH = .89683 Q = 597.89 P = 1061.9 RN/L = 3.6441

SECTION ( 1)BODY FLAP UPPER DEPENDENT VARIABLE CP

| X/LB | 1.0180 | 1.0460 |
|---|---|---|
| PHI | | |
| .000 | -.3669 | -.3537 |
| 40.000 | -.3641 | -.3510 |

ALPHA ( 1) = -3.942 BETA ( 3) = 4.270 MACH = .89683 Q = 597.89 P = 1061.9 RN/L = 3.6441

SECTION ( 1)BODY FLAP UPPER DEPENDENT VARIABLE CP

| X/LB | 1.0180 | 1.0460 |
|---|---|---|
| PHI | | |
| .000 | -.3567 | -.3458 |
| 40.000 | -.3671 | -.3571 |

ALPHA ( 2) = .010 BETA ( 1) = -3.868 MACH = .89660 Q = 597.56 P = 1061.9 RN/L = 3.6228

SECTION ( 1)BODY FLAP UPPER DEPENDENT VARIABLE CP

| X/LB | 1.0180 | 1.0460 |
|---|---|---|
| PHI | | |
| .000 | -.3542 | -.3577 |
| 40.000 | -.3347 | -.3452 |

AMES 11-073(OA148) -140A/B/C/R ORB BODY FLAP UP (XEBF45)

ALPHA ( 2) = .025 BETA ( 2) = .185 MACH = .89660 Q = 597.56 P = 1061.9 RN/L = 3.6228

SECTION ( 1)BODY FLAP UPPER DEPENDENT VARIABLE CP

| X/LB | 1.0180 | 1.0460 |
|---|---|---|
| PHI | | |
| .000 | -.3525 | -.3468 |
| 40.000 | -.3373 | -.3439 |

ALPHA ( 2) = .019 BETA ( 3) = 4.247 MACH = .89660 Q = 597.56 P = 1061.9 RN/L = 3.6228

SECTION ( 1)BODY FLAP UPPER DEPENDENT VARIABLE CP

| X/LB | 1.0180 | 1.0460 |
|---|---|---|
| PHI | | |
| .000 | -.3563 | -.3504 |
| 40.000 | -.3573 | -.3651 |

ALPHA ( 3) = 3.946 BETA ( 1) = -3.873 MACH = .89837 Q = 599.08 P = 1060.5 RN/L = 3.6099

SECTION ( 1)BODY FLAP UPPER DEPENDENT VARIABLE CP

| X/LB | 1.0180 | 1.0460 |
|---|---|---|
| PHI | | |
| .000 | -.3397 | -.3532 |
| 40.000 | -.3402 | -.3328 |

ALPHA ( 3) = 4.002 BETA ( 2) = .184 MACH = .89837 Q = 599.08 P = 1060.5 RN/L = 3.6099

SECTION ( 1)BODY FLAP UPPER DEPENDENT VARIABLE CP

| X/LB | 1.0180 | 1.0460 |
|---|---|---|
| PHI | | |
| .000 | -.3359 | -.3314 |
| 40.000 | -.3295 | -.3392 |

ALPHA ( 3) = 3.937 BETA ( 3) = 4.239 MACH = .89837 Q = 599.08 P = 1060.5 RN/L = 3.6099

SECTION ( 1)BODY FLAP UPPER DEPENDENT VARIABLE CP

| X/LB | 1.0180 | 1.0460 |
|---|---|---|
| PHI | | |
| .000 | -.3432 | -.3406 |
| 40.000 | -.3429 | -.3514 |

AMES 11-073(OA148) -140A/B/C/R ORB BODY FLAP UP (XE8F45)

ALPHA ( 4) = 7.970 BETA ( 1) = -3.658 MACH = .89753 Q = 598.50 P = 1061.4 RN/L = 3.5937

SECTION ( 1)BODY FLAP UPPER DEPENDENT VARIABLE CP

| X/LB | 1.0180 | 1.0460 |
|---|---|---|
| PHI | | |
| .000 | -.3450 | -.3542 |
| 40.000 | -.3505 | -.3313 |

ALPHA ( 4) = 7.979 BETA ( 2) = .177 MACH = .89753 Q = 598.50 P = 1061.4 RN/L = 3.5937

SECTION ( 1)BODY FLAP UPPER DEPENDENT VARIABLE CP

| X/LB | 1.0180 | 1.0460 |
|---|---|---|
| PHI | | |
| .000 | -.3369 | -.3397 |
| 40.000 | -.3480 | -.3264 |

ALPHA ( 4) = 7.978 BETA ( 3) = 4.243 MACH = .89753 Q = 598.50 P = 1061.4 RN/L = 3.5937

SECTION ( 1)BODY FLAP UPPER DEPENDENT VARIABLE CP

| X/LB | 1.0180 | 1.0460 |
|---|---|---|
| PHI | | |
| .000 | -.3515 | -.3593 |
| 40.000 | -.3427 | -.3442 |

ALPHA ( 5) = 11.950 BETA ( 1) = -3.856 MACH = .89653 Q = 597.97 P = 1062.9 RN/L = 3.5856

SECTION ( 1)BODY FLAP UPPER DEPENDENT VARIABLE CP

| X/LB | 1.0180 | 1.0460 |
|---|---|---|
| PHI | | |
| .000 | -.3668 | -.3720 |
| 40.000 | -.3429 | -.3536 |

ALPHA ( 5) = 11.961 BETA ( 2) = .178 MACH = .89653 Q = 597.97 P = 1062.9 RN/L = 3.5856

SECTION ( 1)BODY FLAP UPPER DEPENDENT VARIABLE CP

| X/LB | 1.0180 | 1.0460 |
|---|---|---|
| PHI | | |
| .000 | -.3515 | -.3551 |
| 40.000 | -.3397 | -.3558 |

ORIGINAL PAGE IS OF POOR QUALITY

AMES 11-073(OA148) -140A/B/C/R ORB BODY FLAP UP (XEBF45)

ALPHA ( 5) = 11.950 BETA ( 3) = 4.259 MACH = .89653 Q = 597.97 P = 1062.9 RN/L = 3.5856

SECTION ( 1)BODY FLAP UPPER DEPENDENT VARIABLE CP

| X/LB | 1.0180 | 1.0460 |
|---|---|---|
| PHI | | |
| .000 | -.3734 | -.3725 |
| 90.000 | -.3575 | -.3684 |

AMES 11-073(OA148) -140A/B/C/R ORB BODY FLAP UP (XEBF46) ( 05 AUG 75 )

REFERENCE DATA

SREF = 2690.0000 SQ.FT. XMRP = 1076.6800 IN. XO
LREF = 474.8000 IN. YMRP = .0000 IN. YO
BREF = 936.0000 IN. ZMRP = 375.0000 IN. ZO
SCALE = .0300

PARAMETRIC DATA

RUDDER = .000 SPDBRK = 55.000
BDFLAP = 22.500 L-ELVN = 4.000
R-ELVN = 4.000 MACH = .600

ALPHA ( 1) = -4.081 BETA ( 1) = -7.851 MACH = .59592 Q = 593.39 P = 2387.4 RN/L = 4.8516

SECTION ( 1)BODY FLAP UPPER DEPENDENT VARIABLE CP

| X/LB | 1.0180 | 1.0460 |
|---|---|---|
| PHI | | |
| .000 | -.2840 | -.2753 |
| 40.000 | -.2956 | -.3190 |

ALPHA ( 1) = -3.953 BETA ( 2) = -3.833 MACH = .59592 Q = 593.39 P = 2387.4 RN/L = 4.8516

SECTION ( 1)BODY FLAP UPPER DEPENDENT VARIABLE CP

| X/LB | 1.0180 | 1.0460 |
|---|---|---|
| PHI | | |
| .000 | -.2722 | -.2651 |
| 40.000 | -.2866 | -.3145 |

ALPHA ( 1) = -3.951 BETA ( 3) = .188 MACH = .59592 Q = 593.39 P = 2387.4 RN/L = 4.8516

SECTION ( 1)BODY FLAP UPPER DEPENDENT VARIABLE CP

| X/LB | 1.0180 | 1.0460 |
|---|---|---|
| PHI | | |
| .000 | -.2743 | -.2687 |
| 40.000 | -.2952 | -.3159 |

ALPHA ( 1) = -3.958 BETA ( 4) = 4.269 MACH = .59592 Q = 593.39 P = 2387.4 RN/L = 4.8516

SECTION ( 1)BODY FLAP UPPER DEPENDENT VARIABLE CP

| X/LB | 1.0180 | 1.0460 |
|---|---|---|
| PHI | | |
| .000 | -.2653 | -.2566 |
| 40.000 | -.3042 | -.3354 |

AMES 11-073(OA149) -140A/B/C/R ORB BODY FLAP UP (XE8F46)

ALPHA ( 1) = -3.973 BETA ( 5) = 8.335 MACH = .59592 Q = 593.39 P = 2387.4 RN/L = 4.8516

SECTION ( 1)BODY FLAP UPPER DEPENDENT VARIABLE CP

| X/LB | 1.0180 | 1.0460 |
|---|---|---|
| PHI | | |
| .000 | -.2702 | -.2633 |
| 40.000 | -.3043 | -.3365 |

ALPHA ( 2) = .060 BETA ( 1) = -7.888 MACH = .59634 Q = 594.08 P = 2386.3 RN/L = 4.8479

SECTION ( 1)BODY FLAP UPPER DEPENDENT VARIABLE CP

| X/LB | 1.0180 | 1.0460 |
|---|---|---|
| PHI | | |
| .000 | -.2996 | -.2861 |
| 40.000 | -.2946 | -.3128 |

ALPHA ( 2) = .070 BETA ( 2) = -3.865 MACH = .59634 Q = 594.08 P = 2386.3 RN/L = 4.8479

SECTION ( 1)BODY FLAP UPPER DEPENDENT VARIABLE CP

| X/LB | 1.0180 | 1.0460 |
|---|---|---|
| PHI | | |
| .000 | -.2852 | -.2826 |
| 40.000 | -.2800 | -.3084 |

ALPHA ( 2) = .070 BETA ( 3) = .181 MACH = .59634 Q = 594.08 P = 2386.3 RN/L = 4.8479

SECTION ( 1)BODY FLAP UPPER DEPENDENT VARIABLE CP

| X/LB | 1.0180 | 1.0460 |
|---|---|---|
| PHI | | |
| .000 | -.2700 | -.2752 |
| 40.000 | -.2861 | -.3159 |

ALPHA ( 2) = .068 BETA ( 4) = 4.248 MACH = .59634 Q = 594.08 P = 2386.3 RN/L = 4.8479

SECTION ( 1)BODY FLAP UPPER DEPENDENT VARIABLE CP

| X/LB | 1.0180 | 1.0460 |
|---|---|---|
| PHI | | |
| .000 | -.2722 | -.2646 |
| 40.000 | -.3006 | -.3317 |

AMES 11-073(OA148) -140A/B/C/R ORB BODY FLAP UP (XE8F46)

ALPHA ( 2) = .063 BETA ( 5) = 8.306 MACH = .59634 Q = 594.08 P = 2386.3 RN/L = 4.8479

SECTION ( 1)BODY FLAP UPPER DEPENDENT VARIABLE CP

| X/LB | 1.0180 | 1.0460 |
|---|---|---|
| PHI | | |
| .000 | -.2800 | -.2752 |
| 40.000 | -.3105 | -.3476 |

ALPHA ( 3) = 4.012 BETA ( 1) = -7.901 MACH = .59704 Q = 595.39 P = 2386.0 RN/L = 4.8469

SECTION ( 1)BODY FLAP UPPER DEPENDENT VARIABLE CP

| X/LB | 1.0180 | 1.0460 |
|---|---|---|
| PHI | | |
| .000 | -.3000 | -.3107 |
| 40.000 | -.2904 | -.3048 |

ALPHA ( 3) = 4.016 BETA ( 2) = -3.862 MACH = .59704 Q = 595.39 P = 2386.0 RN/L = 4.8469

SECTION ( 1)BODY FLAP UPPER DEPENDENT VARIABLE CP

| X/LB | 1.0180 | 1.0460 |
|---|---|---|
| PHI | | |
| .000 | -.2837 | -.2908 |
| 40.000 | -.2842 | -.3047 |

ALPHA ( 3) = 4.027 BETA ( 3) = .191 MACH = .59704 Q = 595.39 P = 2386.0 RN/L = 4.8469

SECTION ( 1)BODY FLAP UPPER DEPENDENT VARIABLE CP

| X/LB | 1.0180 | 1.0460 |
|---|---|---|
| PHI | | |
| .000 | -.2627 | -.2708 |
| 40.000 | -.2811 | -.2985 |

ALPHA ( 3) = 4.030 BETA ( 4) = 4.239 MACH = .59704 Q = 595.39 P = 2386.0 RN/L = 4.8469

SECTION ( 1)BODY FLAP UPPER DEPENDENT VARIABLE CP

| X/LB | 1.0180 | 1.0460 |
|---|---|---|
| PHI | | |
| .000 | -.2763 | -.2798 |
| 40.000 | -.3013 | -.3350 |

DATE 13 FEB 76 TABULATED PRESSURE DATA - OA148 ( AMES 11-073-1 )

AMES 11-073(OA148) -140A/B/C/R ORB BODY FLAP UP (XE8F46)

ALPHA ( 3) = 4.035 BETA ( 5) = 8.288 MACH = .59704 Q = 595.39 P = 2386.0 RN/L = 4.8469

SECTION ( 1)BODY FLAP UPPER DEPENDENT VARIABLE CP

| X/LB | 1.0180 | 1.0460 |
|---|---|---|
| PHI | | |
| .000 | -.2885 | -.2939 |
| 40.000 | -.3097 | -.3437 |

ALPHA ( 4) = 7.996 BETA ( 1) = -7.892 MACH = .59670 Q = 594.93 P = 2387.1 RN/L = 4.8410

SECTION ( 1)BODY FLAP UPPER DEPENDENT VARIABLE CP

| X/LB | 1.0180 | 1.0460 |
|---|---|---|
| PHI | | |
| .000 | -.3002 | -.3108 |
| 40.000 | -.2936 | -.3115 |

ALPHA ( 4) = 8.007 BETA ( 2) = -3.861 MACH = .59670 Q = 594.93 P = 2387.1 RN/L = 4.8410

SECTION ( 1)BODY FLAP UPPER DEPENDENT VARIABLE CP

| X/LB | 1.0180 | 1.0460 |
|---|---|---|
| PHI | | |
| .000 | -.2996 | -.3044 |
| 40.000 | -.2848 | -.2822 |

ALPHA ( 4) = 8.012 BETA ( 3) = .176 MACH = .59670 Q = 594.93 P = 2387.1 RN/L = 4.8410

SECTION ( 1)BODY FLAP UPPER DEPENDENT VARIABLE CP

| X/LB | 1.0180 | 1.0460 |
|---|---|---|
| PHI | | |
| .000 | -.2755 | -.2812 |
| 40.000 | -.2715 | -.2951 |

ALPHA ( 4) = 8.012 BETA ( 4) = 4.240 MACH = .59670 Q = 594.93 P = 2387.1 RN/L = 4.8410

SECTION ( 1)BODY FLAP UPPER DEPENDENT VARIABLE CP

| X/LB | 1.0180 | 1.0460 |
|---|---|---|
| PHI | | |
| .000 | -.2927 | -.2820 |
| 40.000 | -.3013 | -.3305 |

AMES 11-073(OA148) -140A/B/C/R ORB BODY FLAP UP (XE8F46)

ALPHA ( 4) = 8.009 BETA ( 5) = 8.293 MACH = .59670 Q = 594.93 P = 2387.1 RN/L = 4.8410

SECTION ( 1)BODY FLAP UPPER DEPENDENT VARIABLE CP

| X/LB | 1.0180 | 1.0460 |
|---|---|---|
| PHI | | |
| .000 | -.2879 | -.2771 |
| 40.000 | -.2982 | -.3469 |

ALPHA ( 5) = 11.987 BETA ( 1) = -7.852 MACH = .59692 Q = 595.28 P = 2386.8 RN/L = 4.8363

SECTION ( 1)BODY FLAP UPPER DEPENDENT VARIABLE CP

| X/LB | 1.0180 | 1.0460 |
|---|---|---|
| PHI | | |
| .000 | -.2963 | -.2965 |
| 40.000 | -.2869 | -.2992 |

ALPHA ( 5) = 12.008 BETA ( 2) = -3.842 MACH = .59692 Q = 595.28 P = 2386.8 RN/L = 4.8363

SECTION ( 1)BODY FLAP UPPER DEPENDENT VARIABLE CP

| X/LB | 1.0180 | 1.0460 |
|---|---|---|
| PHI | | |
| .000 | -.2950 | -.3038 |
| 40.000 | -.2766 | -.2909 |

ALPHA ( 5) = 12.016 BETA ( 3) = .174 MACH = .59692 Q = 595.28 P = 2386.8 RN/L = 4.8363

SECTION ( 1)BODY FLAP UPPER DEPENDENT VARIABLE CP

| X/LB | 1.0180 | 1.0460 |
|---|---|---|
| PHI | | |
| .000 | -.2780 | -.2860 |
| 40.000 | -.2829 | -.2996 |

ALPHA ( 5) = 11.917 BETA ( 4) = 4.245 MACH = .59692 Q = 595.28 P = 2386.8 RN/L = 4.8363

SECTION ( 1)BODY FLAP UPPER DEPENDENT VARIABLE CP

| X/LB | 1.0180 | 1.0460 |
|---|---|---|
| PHI | | |
| .000 | -.2750 | -.2851 |
| 40.000 | -.2915 | -.3236 |

ORIGINAL PAGE IS
OF POOR QUALITY

DATE 13 FEB 76 TABULATED PRESSURE DATA - OA148 ( AMES 11-073-1 )

AMES 11-073(OA148) -140A/B/C/R ORB BODY FLAP UP (XE8F46)

ALPHA ( 5) = 11.934 BETA ( 5) = 8.309 MACH = .59692 Q = 595.28 P = 2386.8 RN/L = 4.8363

SECTION ( 1)BODY FLAP UPPER DEPENDENT VARIABLE CP

| X/LB | 1.0180 | 1.0460 |
|---|---|---|
| PHI | | |
| .000 | -.2584 | -.2816 |
| 40.000 | -.2870 | -.3445 |

AMES 11-073(OA148) -140A/B/C/R ORB BODY FLAP UP (XE8F47) ( 05 AUG 75 )

REFERENCE DATA

SREF = 2690.0000 SQ.FT. XMRP = 1076.6860 IN. XO
LREF = 474.8000 IN. YMRP = .0000 IN. YO
BREF = 936.0680 IN. ZMRP = 375.0000 IN. ZO
SCALE = .0300

PARAMETRIC DATA

RUDDER = -10.000 SPDBRK = 85.000
BDFLAP = 16.300 L-ELVN = 4.000
R-ELVN = 4.000 MACH = 1.400

ALPHA ( 1) = -4.021 BETA ( 1) = -3.852 MACH = 1.3993 Q = 600.40 P = 438.06 RN/L = 2.9180

SECTION ( 1)BODY FLAP UPPER DEPENDENT VARIABLE CP

| X/LB | 1.0180 | 1.0460 |
|---|---|---|
| PHI | | |
| .000 | -.3135 | -.3142 |
| 40.000 | -.3284 | -.3407 |

ALPHA ( 1) = -4.015 BETA ( 2) = .189 MACH = 1.3993 Q = 600.40 P = 438.06 RN/L = 2.3180

SECTION ( 1)BODY FLAP UPPER DEPENDENT VARIABLE CP

| X/LB | 1.0180 | 1.0460 |
|---|---|---|
| PHI | | |
| .000 | -.3038 | -.2998 |
| 40.000 | -.3258 | -.3409 |

ALPHA ( 1) = -4.023 BETA ( 3) = 4.275 MACH = 1.3993 Q = 600.40 P = 438.06 RN/L = 2.9180

SECTION ( 1)BODY FLAP UPPER DEPENDENT VARIABLE CP

| X/LB | 1.0180 | 1.0460 |
|---|---|---|
| PHI | | |
| .000 | -.3187 | -.3250 |
| 40.000 | -.3217 | -.3340 |

ALPHA ( 2) = -.011 BETA ( 1) = -3.871 MACH = 1.3999 Q = 600.31 P = 437.59 RN/L = 2.9188

SECTION ( 1)BODY FLAP UPPER DEPENDENT VARIABLE CP

| X/LB | 1.0180 | 1.0460 |
|---|---|---|
| PHI | | |
| .000 | -.3264 | -.3323 |
| 40.000 | -.3382 | -.3452 |

AMES 11-073(OA148) -140A/B/C/R ORB BODY FLAP UP (XE8F47)

ALPHA ( 2) = -.002 BETA ( 2) = .186 MACH = 1.3999 Q = 600.31 P = 437.59 RN/L = 2.9188

SECTION ( 1)BODY FLAP UPPER DEPENDENT VARIABLE CP

| X/LB | 1.0180 | 1.0460 |
|---|---|---|
| PHI | | |
| .000 | -.3245 | -.3269 |
| 40.000 | -.3378 | -.3512 |

ALPHA ( 2) = -.007 BETA ( 3) = 4.251 MACH = 1.3999 Q = 600.31 P = 437.59 RN/L = 2.9188

SECTION ( 1)BODY FLAP UPPER DEPENDENT VARIABLE CP

| X/LB | 1.0180 | 1.0460 |
|---|---|---|
| PHI | | |
| .000 | -.3308 | -.3332 |
| 40.000 | -.3386 | -.3558 |

ALPHA ( 3) = 3.927 BETA ( 1) = -3.876 MACH = 1.3955 Q = 600.04 P = 440.18 RN/L = 2.9202

SECTION ( 1)BODY FLAP UPPER DEPENDENT VARIABLE CP

| X/LB | 1.0180 | 1.0460 |
|---|---|---|
| PHI | | |
| .000 | -.3374 | -.3428 |
| 40.000 | -.3499 | -.3598 |

ALPHA ( 3) = 3.927 BETA ( 2) = .191 MACH = 1.3955 Q = 600.04 P = 440.18 RN/L = 2.9202

SECTION ( 1)BODY FLAP UPPER DEPENDENT VARIABLE CP

| X/LB | 1.0180 | 1.0460 |
|---|---|---|
| PHI | | |
| .000 | -.3399 | -.3437 |
| 40.000 | -.3479 | -.3571 |

ALPHA ( 3) = 3.930 BETA ( 3) = 4.244 MACH = 1.3955 Q = 600.04 P = 440.18 RN/L = 2.9202

SECTION ( 1)BODY FLAP UPPER DEPENDENT VARIABLE CP

| X/LB | 1.0180 | 1.0460 |
|---|---|---|
| PHI | | |
| .000 | -.3428 | -.3480 |
| 000 | -.3534 | -.3711 |

AMES 11-073(OA148) -140A/B/C/R ORB BODY FLAP UP (XE8F47)

ALPHA ( 4) = 7.863 BETA ( 1) = -3.871 MACH = 1.3954 Q = 600.24 P = 440.41 RN/L = 2.9228

SECTION ( 1)BODY FLAP UPPER DEPENDENT VARIABLE CP

| X/LB | 1.0180 | 1.0460 |
|---|---|---|
| PHI | | |
| .000 | -.3546 | -.3648 |
| 40.000 | -.3589 | -.3648 |

ALPHA ( 4) = 7.994 BETA ( 2) = .174 MACH = 1.3954 Q = 600.24 P = 440.41 RN/L = 2.9228

SECTION ( 1)BODY FLAP UPPER DEPENDENT VARIABLE CP

| X/LB | 1.0180 | 1.0460 |
|---|---|---|
| PHI | | |
| .000 | -.3515 | -.3546 |
| 40.000 | -.3499 | -.3560 |

ALPHA ( 4) = 7.994 BETA ( 3) = 4.239 MACH = 1.3954 Q = 600.24 P = 440.41 RN/L = 2.9228

SECTION ( 1)BODY FLAP UPPER DEPENDENT VARIABLE CP

| X/LB | 1.0180 | 1.0460 |
|---|---|---|
| PHI | | |
| .000 | -.3465 | -.3472 |
| 40.000 | -.3560 | -.3690 |

ALPHA ( 5) = 11.867 BETA ( 1) = -3.858 MACH = 1.3955 Q = 600.34 P = 440.41 RN/L = 2.9245

SECTION ( 1)BODY FLAP UPPER DEPENDENT VARIABLE CP

| X/LB | 1.0180 | 1.0460 |
|---|---|---|
| PHI | | |
| .000 | -.3599 | -.3577 |
| 40.000 | -.3750 | -.3646 |

ALPHA ( 5) = 11.873 BETA ( 2) = .176 MACH = 1.3955 Q = 600.34 P = 440.41 RN/L = 2.9245

SECTION ( 1)BODY FLAP UPPER DEPENDENT VARIABLE CP

| X/LB | 1.0180 | 1.0460 |
|---|---|---|
| PHI | | |
| .000 | -.3627 | -.3710 |
| 40.000 | -.3611 | -.3693 |

AMES 11-073(OA148) -140A/B/C/R ORB BODY FLAP UP (XEBF47)

ALPHA ( 5) = 11.868 BETA ( 3) = 4.257 MACH = 1.3955 Q = 600.34 P = 440.41 RN/L = 2.9245

SECTION ( 1)BODY FLAP UPPER DEPENDENT VARIABLE CP

| X/LB | 1.0180 | 1.0460 |
|---|---|---|
| PHI | | |
| .000 | -.3578 | -.3521 |
| 40.000 | -.3651 | -.3809 |

ALPHA ( 6) = 15.839 BETA ( 1) = -3.834 MACH = 1.3943 Q = 600.32 P = 441.12 RN/L = 2.9229

SECTION ( 1)BODY FLAP UPPER DEPENDENT VARIABLE CP

| X/LB | 1.0180 | 1.0460 |
|---|---|---|
| PHI | | |
| .000 | -.3680 | -.3654 |
| 40.000 | -.3813 | -.3976 |

ALPHA ( 6) = 15.851 BETA ( 2) = .174 MACH = 1.3943 Q = 600.32 P = 441.12 RN/L = 2.9229

SECTION ( 1)BODY FLAP UPPER DEPENDENT VARIABLE CP

| X/LB | 1.0180 | 1.0460 |
|---|---|---|
| PHI | | |
| .000 | -.3652 | -.3513 |
| 40.000 | -.4014 | -.4217 |

ALPHA ( 6) = 15.843 BETA ( 3) = 4.283 MACH = 1.3943 Q = 600.32 P = 441.12 RN/L = 2.9229

SECTION ( 1)BODY FLAP UPPER DEPENDENT VARIABLE CP

| X/LB | 1.0180 | 1.0460 |
|---|---|---|
| PHI | | |
| .000 | -.3578 | -.3452 |
| 40.000 | -.3925 | -.4133 |

AMES 11-073(OA148) -140A/B/C/R ORB BODY FLAP UP (XEBF48) ( 05 AUG 75 )

REFERENCE DATA

SREF = 2690.0000 SQ.FT. XMRP = 1076.6800 IN. XO
LREF = 474.8000 IN. YMRP = .0000 IN. YO
BREF = 936.0680 IN. ZMRP = 375.0000 IN. ZO
SCALE = .0300

PARAMETRIC DATA

RUDDER = -10.000 SPDBRK = 85.000
BDFLAP = 16.300 L-ELVN = 4.000
R-ELVN = 4.000 MACH = 1.250

ALPHA ( 1) = -4.024 BETA ( 1) = -3.849 MACH = 1.2475 Q = 600.37 P = 551.11 RN/L = 3.0241

SECTION ( 1)BODY FLAP UPPER DEPENDENT VARIABLE CP

| X/LB | 1.0180 | 1.0460 |
|---|---|---|
| PHI | | |
| .000 | -.3457 | -.3472 |
| 40.000 | -.3639 | -.3772 |

ALPHA ( 1) = -4.006 BETA ( 2) = .189 MACH = 1.2475 Q = 600.37 P = 551.11 RN/L = 3.0241

SECTION ( 1)BODY FLAP UPPER DEPENDENT VARIABLE CP

| X/LB | 1.0180 | 1.0460 |
|---|---|---|
| PHI | | |
| .000 | -.3434 | -.3434 |
| 40.000 | -.3666 | -.3888 |

ALPHA ( 1) = -4.015 BETA ( 3) = 4.273 MACH = 1.2475 Q = 600.37 P = 551.11 RN/L = 3.0241

SECTION ( 1)BODY FLAP UPPER DEPENDENT VARIABLE CP

| X/LB | 1.0180 | 1.0460 |
|---|---|---|
| PHI | | |
| .000 | -.3624 | -.3689 |
| 40.000 | -.3801 | -.4104 |

ALPHA ( 2) = .012 BETA ( 1) = -3.869 MACH = 1.2460 Q = 599.92 P = 552.04 RN/L = 3.0247

SECTION ( 1)BODY FLAP UPPER DEPENDENT VARIABLE CP

| X/LB | 1.0180 | 1.0460 |
|---|---|---|
| PHI | | |
| .000 | -.3633 | -.3793 |
| 40.000 | -.3741 | -.3862 |

DATE 13 FEB 75 TABULATED PRESSURE DATA - OA148 ( AMES 11-073-1 )

AMES 11-073(OA148) -140A/B/C/R ORB BODY FLAP UP (XEBF48)

ALPHA ( 2) = .020 BETA ( 2) = .189 MACH = 1.2460 Q = 599.92 P = 552.04 RN/L = 3.0247

SECTION ( 1)BODY FLAP UPPER DEPENDENT VARIABLE CP

| X/LB | 1.0180 | 1.0460 |
|---|---|---|
| PHI | | |
| .000 | -.3614 | -.3758 |
| 40.000 | -.3720 | -.3943 |

ALPHA ( 2) = .014 BETA ( 3) = 4.249 MACH = 1.2460 Q = 599.92 P = 552.04 RN/L = 3.0247

SECTION ( 1)BODY FLAP UPPER DEPENDENT VARIABLE CP

| X/LB | 1.0180 | 1.0460 |
|---|---|---|
| PHI | | |
| .000 | -.3669 | -.3686 |
| 40.000 | -.3840 | -.4072 |

ALPHA ( 3) = 3.961 BETA ( 1) = -3.873 MACH = 1.2462 Q = 600.16 P = 552.05 RN/L = 3.0262

SECTION ( 1)BODY FLAP UPPER DEPENDENT VARIABLE CP

| X/LB | 1.0180 | 1.0460 |
|---|---|---|
| PHI | | |
| .000 | -.3857 | -.3944 |
| 40.000 | -.3904 | -.3966 |

ALPHA ( 3) = 3.960 BETA ( 2) = .185 MACH = 1.2462 Q = 600.16 P = 552.05 RN/L = 3.0262

SECTION ( 1)BODY FLAP UPPER DEPENDENT VARIABLE CP

| X/LB | 1.0180 | 1.0460 |
|---|---|---|
| PHI | | |
| .000 | -.3783 | -.3906 |
| 40.000 | -.3885 | -.4048 |

ALPHA ( 3) = 3.964 BETA ( 3) = 4.240 MACH = 1.2462 Q = 600.16 P = 552.05 RN/L = 3.0262

SECTION ( 1)BODY FLAP UPPER DEPENDENT VARIABLE CP

| X/LB | 1.0180 | 1.0460 |
|---|---|---|
| PHI | | |
| .000 | -.3874 | -.3921 |
| 40.000 | -.3933 | -.4103 |

AMES 11-073(OA148) -140A/B/C/R ORB BODY FLAP UP (XEBF48)

ALPHA ( 4) = 7.898 BETA ( 1) = -3.868 MACH = 1.2462 Q = 600.16 P = 552.05 RN/L = 3.0273

SECTION ( 1)BODY FLAP UPPER DEPENDENT VARIABLE CP

| X/LB | 1.0180 | 1.0460 |
|---|---|---|
| PHI | | |
| .000 | -.4047 | -.4120 |
| 40.000 | -.4094 | -.4238 |

ALPHA ( 4) = 8.000 BETA ( 2) = .178 MACH = 1.2462 Q = 600.16 P = 552.05 RN/L = 3.0273

SECTION ( 1)BODY FLAP UPPER DEPENDENT VARIABLE CP

| X/LB | 1.0180 | 1.0460 |
|---|---|---|
| PHI | | |
| .000 | -.4028 | -.4130 |
| 40.000 | -.3981 | -.4083 |

ALPHA ( 4) = 8.003 BETA ( 3) = 4.235 MACH = 1.2462 Q = 600.16 P = 552.05 RN/L = 3.0273

SECTION ( 1)BODY FLAP UPPER DEPENDENT VARIABLE CP

| X/LB | 1.0180 | 1.0460 |
|---|---|---|
| PHI | | |
| .000 | -.4007 | -.3969 |
| 40.000 | -.4101 | -.4217 |

ALPHA ( 5) = 11.933 BETA ( 1) = -3.854 MACH = 1.2450 Q = 599.95 P = 552.98 RN/L = 3.0281

SECTION ( 1)BODY FLAP UPPER DEPENDENT VARIABLE CP

| X/LB | 1.0180 | 1.0460 |
|---|---|---|
| PHI | | |
| .000 | -.4157 | -.4036 |
| 40.000 | -.4375 | -.4537 |

ALPHA ( 5) = 11.941 BETA ( 2) = .176 MACH = 1.2450 Q = 599.95 P = 552.98 RN/L = 3.0281

SECTION ( 1)BODY FLAP UPPER DEPENDENT VARIABLE CP

| X/LB | 1.0180 | 1.0460 |
|---|---|---|
| PHI | | |
| .000 | -.4085 | -.4115 |
| 40.000 | -.4359 | -.4446 |

ORIGINAL PAGE IS OF POOR QUALITY

AMES 11-073(OA14B) -140A/B/C/R ORB BODY FLAP UP (XEBF4B)

ALPHA ( 5) = 11.933 BETA ( 3) = 4.253 MACH = 1.2450 Q = 599.95 P = 552.98 RN/L = 3.1291

SECTION ( 1)BODY FLAP UPPER DEPENDENT VARIABLE CP

| X/LB | 1.0180 | 1.0460 |
|---|---|---|
| PHI | | |
| .000 | -.4091 | -.4146 |
| 40.000 | -.4167 | -.4405 |

AMES 11-073(OA148) -140A/B/C/R ORB BODY FLAP UP (XEBF49) ( 05 AUG 75 )

REFERENCE DATA

SREF = 2690.0000 SQ.FT. XMRP = 1076.6600 IN. XO
LREF = 474.8000 IN. YMRP = .0000 IN. YO
BREF = 935.0860 IN. ZMRP = 375.0000 IN. ZO
SCALE = .0300

PARAMETRIC DATA

RUDDER = -10.000 SPDBRK = 85.000
BDFLAP = 15.300 L-ELVN = 4.000
R-ELVN = 4.000 MACH = 1.100

ALPHA ( 1) = -4.022 BETA ( 1) = -3.848 MACH = 1.1001 Q = 600.26 P = 708.59 RN/L = 3.1930

SECTION ( 1)BODY FLAP UPPER DEPENDENT VARIABLE CP

| X/LB | 1.0180 | 1.0460 |
|---|---|---|
| PHI | | |
| .000 | -.3994 | -.3968 |
| 40.000 | -.4233 | -.4495 |

ALPHA ( 1) = -4.022 BETA ( 2) = .189 MACH = 1.1001 Q = 600.26 P = 708.59 RN/L = 3.1930

SECTION ( 1)BODY FLAP UPPER DEPENDENT VARIABLE CP

| X/LB | 1.0180 | 1.0460 |
|---|---|---|
| PHI | | |
| .000 | -.4059 | -.4134 |
| 40.000 | -.4472 | -.4825 |

ALPHA ( 1) = -4.029 BETA ( 3) = 4.271 MACH = 1.1001 Q = 600.26 = 708.59 RN/L = 3.1930

SECTION ( 1)BODY FLAP UPPER DEPENDENT VARIABLE CP

| X/LB | 1.0180 | 1.0460 |
|---|---|---|
| PHI | | |
| .000 | -.4259 | -.4297 |
| 40.000 | -.4774 | -.4791 |

ALPHA ( 2) = .025 BETA ( 1) = -3.866 MACH = 1.1003 Q = 600.53 P = 708.60 RN/L = 3.1951

SECTION ( 1)BODY FLAP UPPER DEPENDENT VARIABLE CP

| X/LB | 1.0180 | 1.0460 |
|---|---|---|
| PHI | | |
| .000 | -.4113 | -.4203 |
| 40.000 | -.4118 | -.4250 |

AMES 11-073(OA148) -140A/B/C/R ORB BODY FLAP UP (XE8F49)

ALPHA ( 2) = .030 BETA ( 2) = .186 MACH = 1.1003 Q = 600.53 P = 708.60 RN/L = 3.1951

SECTION ( 1)BODY FLAP UPPER DEPENDENT VARIABLE CP

| X/LB | 1.0180 | 1.0460 |
|---|---|---|
| PHI | | |
| .000 | -.3544 | -.4090 |
| 40.000 | -.4220 | -.4534 |

ALPHA ( 2) = .026 BETA ( 3) = 4.247 MACH = 1.1003 Q = 600.53 P = 708.60 RN/L = 3.1951

SECTION ( 1)BODY FLAP UPPER DEPENDENT VARIABLE CP

| X/LB | 1.0180 | 1.0460 |
|---|---|---|
| PHI | | |
| .000 | -.4105 | -.4171 |
| 40.000 | -.4499 | -.4652 |

ALPHA ( 3) = 3.995 BETA ( 1) = -3.867 MACH = 1.1004 Q = 600.49 P = 708.37 RN/L = 3.1949

SECTION ( 1)BODY FLAP UPPER DEPENDENT VARIABLE CP

| X/LB | 1.0180 | 1.0460 |
|---|---|---|
| PHI | | |
| .000 | -.4339 | -.4391 |
| 40.000 | -.4216 | -.4315 |

ALPHA ( 3) = 3.996 BETA ( 2) = .185 MACH = 1.1004 Q = 600.49 P = 708.37 RN/L = 3.1949

SECTION ( 1)BODY FLAP UPPER DEPENDENT VARIABLE CP

| X/LB | 1.0180 | 1.0460 |
|---|---|---|
| PHI | | |
| .000 | -.4158 | -.4290 |
| 40.000 | -.4278 | -.4488 |

ALPHA ( 3) = 3.999 BETA ( 3) = 4.239 MACH = 1.1004 Q = 600.49 P = 708.37 RN/L = 3.1949

SECTION ( 1)BODY FLAP UPPER DEPENDENT VARIABLE CP

| X/LB | 1.0180 | 1.0460 |
|---|---|---|
| PHI | | |
| .000 | -.4264 | -.4286 |
| 40.000 | -.4493 | -.4482 |

AMES 11-073(OA148) -140A/B/C/R ORB BODY FLAP UP (XE8F49)

ALPHA ( 4) = 7.942 BETA ( 1) = -3.865 MACH = 1.1006 Q = 600.80 P = 708.61 RN/L = 3.1953

SECTION ( 1)BODY FLAP UPPER DEPENDENT VARIABLE CP

| X/LB | 1.0180 | 1.0460 |
|---|---|---|
| PHI | | |
| .000 | -.4551 | -.4643 |
| 40.000 | -.4407 | -.4492 |

ALPHA ( 4) = 8.042 BETA ( 2) = .178 MACH = 1.1006 Q = 600.80 P = 708.61 RN/L = 3.1953

SECTION ( 1)BODY FLAP UPPER DEPENDENT VARIABLE CP

| X/LB | 1.0180 | 1.0460 |
|---|---|---|
| PHI | | |
| .000 | -.4372 | -.4419 |
| 40.000 | -.4563 | -.4752 |

ALPHA ( 4) = 8.044 BETA ( 3) = 4.232 MACH = 1.1006 Q = 600.80 P = 708.61 RN/L = 3.1953

SECTION ( 1)BODY FLAP UPPER DEPENDENT VARIABLE CP

| X/LB | 1.0180 | 1.0460 |
|---|---|---|
| .000 | -.4420 | -.4439 |
| 40.000 | -.4661 | -.4774 |

ALPHA ( 5) = 11.980 BETA ( 1) = -3.845 MACH = 1.0980 Q = 599.65 P = 710.48 RN/L = 3.1930

SECTION ( 1)BODY FLAP UPPER DEPENDENT VARIABLE CP

| X/LB | 1.0180 | 1.0460 |
|---|---|---|
| PHI | | |
| .000 | -.4692 | -.4803 |
| 40.000 | -.4926 | -.5157 |

ALPHA ( 5) = 11.986 BETA ( 2) = 181 MACH = 1.0980 Q = 599.65 P = 710.48 RN/L = 3.1930

SECTION ( 1)BODY FLAP UPPER DEPENDENT VARIABLE CP

| X/LB | 1.0180 | 1.0460 |
|---|---|---|
| PHI | | |
| .000 | -.4560 | -.4645 |
| 40.000 | -.4756 | -.5040 |

AMES 11-073(OA148) -140A/B/C/R ORB BODY FLAP UP (XE8F49)

ALPHA ( 5) = 11.982 BETA ( 3) = 4.250 MACH = 1.0980 Q = 599.65 P = 710.48 RN/L = 3.1930

SECTION ( 1)BODY FLAP UPPER DEPENDENT VARIABLE CP

| X/LB | 1.0180 | 1.0460 |
|---|---|---|
| PHI | | |
| .000 | -.4655 | -.4757 |
| 40.000 | -.4703 | -.4889 |

AMES 11-073(OA148) -140A/B/C/R ORB BODY FLAP UP (XEBF50) ( 05 AUG 75 )

REFERENCE DATA

SREF = 2690.0000 SQ.FT. XMRP = 1076.6800 IN. XO
LREF = 474.8000 IN. YMRP = .0000 IN. YO
BREF = 936.0680 IN. ZMRP = 375.0000 IN. ZO
SCALE = .0300

PARAMETRIC DATA

RUDDER = -10.000 SPDBRK = 85.000
BDFLAP = 16.300 L-ELVN = 4.000
R-ELVN = 4.000 MACH = .900

ALPHA ( 1) = -4.039 BETA ( 1) = -3.850 MACH = .89970 Q = 599.92 P = 1058.7 RN/L = 3.5763

SECTION ( 1)BODY FLAP UPPER DEPENDENT VARIABLE CP

| X/LB | 1.0180 | 1.0460 |
|---|---|---|
| PHI | | |
| .000 | -.3492 | -.3556 |
| 40.000 | -.3360 | -.3544 |

ALPHA ( 1) = -4.026 BETA ( 2) = .188 MACH = .89970 Q = 599.92 P = 1058.7 RN/L = 3.5763

SECTION ( 1)BODY FLAP UPPER DEPENDENT VARIABLE CP

| X/LB | 1.0180 | 1.0460 |
|---|---|---|
| PHI | | |
| .000 | -.3348 | -.3353 |
| 40.000 | -.3546 | -.3971 |

ALPHA ( 1) = -4.037 BETA ( 3) = 4.267 MACH = .89970 Q = 599.92 P = 1058.7 RN/L = 3.5763

SECTION ( 1)BODY FLAP UPPER DEPENDENT VARIABLE CP

| X/LB | 1.0180 | 1.0460 |
|---|---|---|
| PHI | | |
| .000 | -.3297 | -.3261 |
| 40.000 | -.3761 | -.4210 |

ALPHA ( 2) = .032 BETA ( 1) = -3.867 MACH = .89853 Q = 599.04 P = 1060.0 RN/L = 3.5758

SECTION ( 1)BODY FLAP UPPER DEPENDENT VARIABLE CP

| X/LB | 1.0180 | 1.0460 |
|---|---|---|
| PHI | | |
| .000 | -.3443 | -.3483 |
| 40.000 | -.3336 | -.3414 |

AMES 11-073(OA148) -140A/B/C/R ORB BODY FLAP UP (XEBF50)

ALPHA ( 2) = .035 BETA ( 2) = .184 MACH = .89853 Q = 599.04 P = 1060.0 RN/L = 3.5758

SECTION ( 1)BODY FLAP UPPER DEPENDENT VARIABLE CP

| X/LB | 1.0190 | 1.0460 |
|---|---|---|
| PHI | | |
| .000 | -.3193 | -.3390 |
| 40.000 | -.3458 | -.3931 |

ALPHA ( 2) = .028 BETA ( 3) = 4.248 MACH = .89853 Q = 599.04 P = 1060.0 RN/L = 3.5758

SECTION ( 1)BODY FLAP UPPER DEPENDENT VARIABLE CP

| X/LB | 1.0180 | 1.0460 |
|---|---|---|
| PHI | | |
| .000 | -.3322 | -.3305 |
| 40.000 | -.3799 | -.4092 |

ALPHA ( 3) = 3.999 BETA ( 1) = -3.868 MACH = .90073 Q = 600.62 P = 1057.6 RN/L = 3.5790

SECTION ( 1)BODY FLAP UPPER DEPENDENT VARIABLE CP

| X/LB | 1.0180 | 1.0460 |
|---|---|---|
| PHI | | |
| .000 | -.3348 | -.3470 |
| 40.000 | -.3168 | -.3288 |

ALPHA ( 3) = 4.003 BETA ( 2) = .184 MACH = .90073 Q = 600.62 P = 1057.6 RN/L = 3.5790

SECTION ( 1)BODY FLAP UPPER DEPENDENT VARIABLE CP

| X/LB | 1.0180 | 1.0460 |
|---|---|---|
| PHI | | |
| .000 | -.3106 | -.3255 |
| 40.000 | -.3329 | -.3657 |

ALPHA ( 3) = 4.005 BETA ( 3) = 4.239 MACH = .90073 Q = 600.62 P = 1057.6 RN/L = 3.5790

SECTION ( 1)BODY FLAP UPPER DEPENDENT VARIABLE CP

| X/LB | 1.0180 | 1.0460 |
|---|---|---|
| PHI | | |
| .000 | -.3254 | -.3491 |
| 40.000 | -.3647 | -.3908 |

AMES 11-073(OA148) -140A/B/C/R ORB BODY FLAP UP (XE8F50)

ALPHA ( 4) = 8.040 BETA ( 1) = -3.870 MACH = .89937 Q = 599.61 P = 1059.0 RN/L = 3.5771

SECTION ( 1)BODY FLAP UPPER DEPENDENT VARIABLE CP

| X/LB | 1.0180 | 1.0460 |
|---|---|---|
| PHI | | |
| .000 | -.3278 | -.3521 |
| 40.000 | -.3183 | -.3318 |

ALPHA ( 4) = 8.045 BETA ( 2) = .178 MACH = .89937 Q = 599.61 P = 1059.0 RN/L = 3.5771

SECTION ( 1)BODY FLAP UPPER DEPENDENT VARIABLE CP

| X/LB | 1.0180 | 1.0460 |
|---|---|---|
| PHI | | |
| .000 | -.3167 | -.3278 |
| 40.000 | -.3283 | -.3599 |

ALPHA ( 4) = 8.043 BETA ( 3) = -4.236 MACH = .89937 Q = 599.61 P = 1059.0 RN/L = 3.5771

SECTION ( 1)BODY FLAP UPPER DEPENDENT VARIABLE CP

| X/LB | 1.0180 | 1.0460 |
|---|---|---|
| PHI | | |
| .000 | -.3313 | -.3296 |
| 40.000 | -.3596 | -.3737 |

ALPHA ( 5) = 11.980 BETA ( 1) = -3.854 MACH = .89910 Q = 599.28 P = 1059.0 RN/L = 3.5742

SECTION ( 1)BODY FLAP UPPER DEPENDENT VARIABLE CP

| X/LB | 1.0180 | 1.0460 |
|---|---|---|
| PHI | | |
| .000 | -.3389 | -.3512 |
| 40.000 | -.3217 | -.3415 |

ALPHA ( 5) = 11.989 BETA ( 2) = .180 MACH = .89910 Q = 599.28 P = 1059.0 RN/L = 3.5742

SECTION ( 1)BODY FLAP UPPER DEPENDENT VARIABLE CP

| X/LB | 1.0180 | 1.0460 |
|---|---|---|
| PHI | | |
| .000 | -.3296 | -.3397 |
| 40.000 | -.3364 | -.3578 |

AMES 11-073(OA148) -140A/B/C/R ORB BODY FLAP UP (XEBF50)

ALPHA ( 5) = 11.979 BETA ( 3) = 4.260 MACH = .89910 Q = 599.28 P = 1059.0 RN/L = 3.5742

SECTION ( 1)BODY FLAP UPPER DEPENDENT VARIABLE CP

| X/LB | 1.0180 | 1.0460 |
|---|---|---|
| PHI | | |
| .000 | -.3276 | -.3375 |
| 40.000 | -.3633 | -.3869 |

DATE 13 FEB 76 TABULATED PRESSURE DATA - OA148 ( AMES 11-073-1 ) (XE8F51) ( 05 AUG 75 )

AMES 11-073(OA148) -140A/B/C/R ORB BODY FLAP UP

REFERENCE DATA

SREF = 2690.0000 SQ.FT. XMRP = 1 6.6800 IN. XO
LREF = 474.8000 IN. YMRP = .0000 IN. YO
BREF = 936.0680 IN. ZMRP = 375.0000 IN. ZO
SCALE = .0300

PARAMETRIC DATA

RUDDER = -10.000 SPDBRK = 85.000
BDFLAP = 16.300 L-ELVN = 4.000
R-ELVN = 4.000 MACH = .600

ALPHA ( 1) = -3.976 BETA ( 1) = -7.854 MACH = .59542 Q = 592.57 P = 2387.9 RN/L = 4.8104

SECTION ( 1)BODY FLAP UPPER DEPENDENT VARIABLE CP

| X/LB | 1.0180 | 1.0460 |
|---|---|---|
| PHI | | |
| .000 | -.3072 | -.3072 |
| 40.000 | -.2840 | -.3153 |

ALPHA ( 1) = -3.959 BETA ( 2) = -3.844 MACH = .59542 Q = 592.57 P = 2387.9 RN/L = 4.8104

SECTION ( 1)BODY FLAP UPPER DEPENDENT VARIABLE CP

| X/LB | 1.0180 | 1.0460 |
|---|---|---|
| PHI | | |
| .000 | -.3049 | -.3094 |
| 40.000 | -.2591 | -.3032 |

ALPHA ( 1) = -3.956 BETA ( 3) = .188 MACH = .59542 Q = 592.57 P = 2387.9 RN/L = 4.8104

SECTION ( 1)BODY FLAP UPPER DEPENDENT VARIABLE CP

| X/LB | 1.0180 | 1.0460 |
|---|---|---|
| PHI | | |
| .000 | -.2836 | -.2862 |
| 40.000 | -.3089 | -.3674 |

ALPHA ( 1) = -3.963 BETA ( 4) = 4.269 MACH = .59542 Q = 592.57 P = 2387.9 RN/L = 4.8104

SECTION ( 1)BODY FLAP UPPER DEPENDENT VARIABLE CP

| X/LB | .0180 | 1.0460 |
|---|---|---|
| PHI | | |
| .000 | -.2636 | -.2605 |
| 40.000 | -.3320 | - 3734 |

ORIGINAL PAGE IS
OF POOR QUALITY

AMES 11-073(OA148) -140A/B/C/R ORB BODY FLAP UP (XEBF51)

ALPHA ( 1) = -3.980 BETA ( 5) = 8.339 MACH = .59542 Q = 592.57 P = 2387.9 RN/L = 4.8104

SECTION ( 1)BODY FLAP UPPER DEPENDENT VARIABLE CP

| X/LB | 1.0180 | 1.0460 |
|---|---|---|
| PHI | | |
| .000 | -.2688 | -.2693 |
| 40.000 | -.3279 | -.3665 |

ALPHA ( 2) = .060 BETA ( 1) = -7.891 MACH = .59620 Q = 593.99 P = 2387.5 RN/L = 4.8200

SECTION ( 1)BODY FLAP UPPER DEPENDENT VARIABLE CP

| X/LB | 1.0180 | 1.0460 |
|---|---|---|
| PHI | | |
| .000 | -.2985 | -.3023 |
| 40.000 | -.2827 | -.3075 |

ALPHA ( 2) = .070 BETA ( 2) = -3.863 MACH = .59620 Q = 593.99 P = 2387.5 RN/L = 4.8200

SECTION ( 1)BODY FLAP UPPER DEPENDENT VARIABLE CP

| X/LB | 1.0180 | 1.0460 |
|---|---|---|
| PHI | | |
| .000 | -.3006 | -.3125 |
| 40.000 | -.2796 | -.3115 |

ALPHA ( 2) = .075 BETA ( 3) = .185 MACH = .59620 Q = 593.99 P = 2387.5 RN/L = 4.8200

SECTION ( 1)BODY FLAP UPPER DEPENDENT VARIABLE CP

| X/LB | 1.0180 | 1.0460 |
|---|---|---|
| PHI | | |
| .000 | -.2653 | -.2807 |
| 40.000 | -.3015 | -.3550 |

ALPHA ( 2) = .070 BETA ( 4) = 4.248 MACH = .59620 Q = 593.99 P = 2387.5 RN/L = 4.8200

SECTION ( 1)BODY FLAP UPPER DEPENDENT VARIABLE CP

| X/LB | 1.0180 | 1.0460 |
|---|---|---|
| PHI | | |
| .000 | -.2710 | -.2755 |
| 40.000 | -.3260 | -.3641 |

AMES 11-073(OA148) -140A/B/C/R ORB BODY FLAP UP (XEBF51)

ALPHA ( 2) = .066 BETA ( 5) = 8.300 MACH = .59620 Q = 593.99 P = 2397.5 RN/L = 4.8200

SECTION ( 1)BODY FLAP UPPER DEPENDENT VARIABLE CP

| X/LB | 1.0180 | 1.0460 |
|---|---|---|
| PHI | | |
| .000 | -.2710 | -.2627 |
| 40.000 | -.3242 | -.3546 |

ALPHA ( 3) = 4.023 BETA ( 1) = -7.901 MACH = .59564 Q = 593.05 P = 2388.1 RN/L = 4.8166

SECTION ( 1)BODY FLAP UPPER DEPENDENT VARIABLE CP

| X/LB | 1.0180 | 1.0460 |
|---|---|---|
| PHI | | |
| .000 | -.2994 | -.3100 |
| 40.000 | -.2897 | -.3232 |

ALPHA ( 3) = 4.027 BETA ( 2) = -3.864 MACH = .59564 Q = 593.05 P = 2388.1 RN/L = 4.8166

SECTION ( 1)BODY FLAP UPPER DEPENDENT VARIABLE CP

| X/LB | 1.0180 | 1.0460 |
|---|---|---|
| PHI | | |
| .000 | -.2994 | -.3181 |
| 40.000 | -.2950 | -.2970 |

ALPHA ( 3) = 4.029 BETA ( 3) = .191 MACH = .59564 Q = 593.05 P = 2388.1 RN/L = 4.8166

SECTION ( 1)BODY FLAP UPPER DEPENDENT VARIABLE CP

| X/LB | 1.0180 | 1.0460 |
|---|---|---|
| PHI | | |
| .000 | -.2589 | -.2652 |
| 40.000 | -.2946 | -.3423 |

ALPHA ( 3) = 4.031 BETA ( 4) = 4.239 MACH = .59564 Q = 593.05 P = 2398.1 RN/L = 4.8166

SECTION ( 1)BODY FLAP UPPER DEPENDENT VARIABLE CP

| X/LB | 1.0180 | 1.0460 |
|---|---|---|
| PHI | | |
| .000 | -.2749 | -.2919 |
| 40.000 | -.3168 | -.3513 |

AMES 11-073(OA148) -140A/B/C/R ORB BODY FLAP UP (XE8F51)

ALPHA ( 3) = 4.035 BETA ( 5) = 8.279 MACH = .59564 Q = 593.05 P = 2388.1 RN/L = 4.8166

SECTION ( 1)BODY FLAP UPPER DEPENDENT VARIABLE CP

| X/LB | 1.0180 | 1.0460 |
|---|---|---|
| PHI | | |
| .000 | -.2730 | -.2831 |
| 40.000 | -.3229 | -.3603 |

ALPHA ( 4) = 8.061 BETA ( 1) = -7.886 MACH = .59572 Q = 593.16 P = 2387.8 RN/L = 4.8368

SECTION ( 1)BODY FLAP UPPER DEPENDENT VARIABLE CP

| X/LB | 1.0180 | 1.0460 |
|---|---|---|
| PHI | | |
| .000 | -.2903 | -.2927 |
| 40.000 | -.2998 | -.3332 |

ALPHA ( 4) = 8.070 BETA ( 2) = -3.859 MACH = .59572 Q = 593.16 P = 2387.8 RN/L = 4.8368

SECTION ( 1)BODY FLAP UPPER DEPENDENT VARIABLE CP

| X/LB | 1.0180 | 1.0460 |
|---|---|---|
| PHI | | |
| .000 | -.2881 | -.3184 |
| 40.000 | -.2810 | -.3167 |

ALPHA ( 4) = 8.059 BETA ( 3) = .180 MACH = .59572 Q = 593.16 P = 2387.8 RN/L = 4.8358

SECTION ( 1)BODY FLAP UPPER DEPENDENT VARIABLE CP

| X/LB | 1.0180 | 1.0460 |
|---|---|---|
| PHI | | |
| .000 | -.2638 | -.2697 |
| 40.000 | -.2855 | -.3227 |

ALPHA ( 4) = 8.069 BETA ( 4) = 4.237 MACH = .59572 Q = 593.16 P = 2387.8 RN/L = 4.8368

SECTION ( 1)BODY FLAP UPPER DEPENDENT VARIABLE CP

| X/LB | 1.0180 | 1.0460 |
|---|---|---|
| PHI | | |
| .000 | -.2709 | -.2761 |
| 40.000 | -.3033 | -.3338 |

AMES 11-073(OA148) -140A/B/C/R ORB BODY FLAP UP (XE8F51)

ALPHA ( 4) = 8.063 BETA ( 5) = 8.294 MACH = .59572 Q = 593.16 P = 2387.6 RN/L = 4.8358

SECTION ( 1)BODY FLAP UPPER DEPENDENT VARIABLE CP

| X/LB | 1.0180 | 1.0460 |
|---|---|---|
| PHI | | |
| .000 | -.2727 | -.2857 |
| 40.000 | -.3170 | -.3571 |

ALPHA ( 5) = 12.002 BETA ( 1) = -7.547 MACH = .59550 Q = 592.81 P = 2388.1 RN/L = 4.8267

SECTION ( 1)BODY FLAP UPPER DEPENDENT VARIABLE CP

| X/LB | 1.0180 | 1.0460 |
|---|---|---|
| PHI | | |
| .000 | -.2675 | -.2916 |
| 40.000 | -.2864 | -.3271 |

ALPHA ( 5) = 12.023 BETA ( 2) = -3.840 MACH = .59550 Q = 592.81 P = 2388.1 RN/L = 4.8267

SECTION ( 1)BODY FLAP UPPER DEPENDENT VARIABLE CP

| X/LB | 1.0180 | 1.0460 |
|---|---|---|
| PHI | | |
| .000 | -.2781 | -.2923 |
| 40.000 | -.2833 | -.3152 |

ALPHA ( 5) = 12.027 BETA ( 3) = .177 MACH = .59550 Q = 592.81 P = 2388.1 RN/L = 4.8267

SECTION ( 1)BODY FLAP UPPER DEPENDENT VARIABLE CP

| X/LB | 1.0180 | 1.0460 |
|---|---|---|
| PHI | | |
| .000 | -.2608 | -.2726 |
| 40.000 | -.2856 | -.3186 |

ALPHA ( 5) = 12.024 BETA ( 4) = 4.250 MACH = .59550 Q = 592.81 P = 2388.1 RN/L = 4.8267

SECTION ( 1)BODY FLAP UPPER DEPENDENT VARIABLE CP

| X/LB | 1.0180 | 1.0460 |
|---|---|---|
| PHI | | |
| .000 | -.2656 | -.2723 |
| 40.000 | -.3030 | -.3184 |

DATE 13 FEB 75 TABULATED PRESSURE DATA - OA148 ( AMES 11-073-1 )

AMES 11-073(OA148) -140A/B/C/R ORB BODY FLAP UP (XEBF51)

ALPHA ( 5) = 12.010 BETA ( 5) = 8.307 MACH = .59550 Q = 592.61 P = 2398.1 PN/L = 4.8257

SECTION ( 1)BODY FLAP UPPER DEPENDENT VARIABLE CP

| X/LB | 1.0180 | 1.0462 |
|---|---|---|
| PHI | | |
| .000 | -.2592 | -.2713 |
| 40.000 | -.2977 | -.3473 |

AMES 11-073(OA148) -140A/B/C/R ORB BODY FLAP UP (XE8F52) ( 05 AUG 75 )

REFERENCE DATA

SREF = 2690.0000 SQ.FT. XMRP = 1076.6900 IN. XO
LREF = 474.8000 IN. YMRP = .0000 IN. YO
BREF = 936.0680 IN. ZMRP = 375.0000 IN. ZO
SCALE = .0300

PARAMETRIC DATA

RUDDER = -10.000 SPDBRK = 55.100
BDFLAP = 15.300 L-ELVN = -4.100
R-ELVN = -4.000 MACH = 1.400

ALPHA ( 1) = -4.050 BETA ( 1) = -3.860 MACH = 1.3963 Q = 600.46 P = 439.94 PN/L = 2.9139

SECTION ( 1)BODY FLAP UPPER DEPENDENT VARIABLE CP

| X/LB | 1.0180 | 1.0460 |
|---|---|---|
| PHI | | |
| .000 | -.3232 | -.3164 |
| 40.000 | -.3681 | -.3695 |

ALPHA ( 1) = -4.043 BETA ( 2) = .186 MACH = 1.3963 Q = 600.46 P = 439.94 PN/L = 2.9139

SECTION ( 1)BODY FLAP UPPER DEPENDENT VARIABLE CP

| X/LB | 1.0180 | 1.0460 |
|---|---|---|
| PHI | | |
| .000 | -.3218 | -.3171 |
| 40.000 | -.3635 | -.3765 |

ALPHA ( 1) = -4.049 BETA ( 3) = 4.268 MACH = 1.3963 Q = 600.46 P = 439.94 PN/L = 2.9139

SECTION ( 1)BODY FLAP UPPER DEPENDENT VARIABLE CP

| X/LB | 1.0180 | 1.0460 |
|---|---|---|
| PHI | | |
| .000 | -.3260 | -.3232 |
| 40.000 | -.3517 | -.3654 |

ALPHA ( 2) = -.027 BETA ( 1) = -3.878 MACH = 1.3971 Q = 600.78 P = 439.70 PN/L = 2.9154

SECTION ( 1)BODY FLAP UPPER DEPENDENT VARIABLE CP

| X/LB | 1.0180 | 1.0460 |
|---|---|---|
| PHI | | |
| .000 | -.3264 | -.3200 |
| 40.000 | -.3576 | -.3652 |

AMES 11-073( 3) -140A/B/C/R ORB BODY FLAP UP (XXBF52)

ALPHA ( 2) = -.013 BETA ( 2) = .172 M 1.3971 Q = 600.76 P = 439.70 RN/L = 2.9154

SECTION ( 1)BODY FLAP UPPER DEPE V. . BLE CP

| X/LB | 1.0180 | 1.0460 |
|---|---|---|
| PHI | | |
| .000 | -.3311 | -.3307 |
| 40.000 | -.3564 | -.3663 |

ALPHA ( 2) = -.015 BETA ( 3) = 4.[illegible] 1.3971 Q = 600.78 P = 439.70 RN/L = 2.9154

SECTION ( 1)BODY FLAP UPPER De[illegible] ARIABLE CP

| X/LB | 1.0180 | 1.0460 |
|---|---|---|
| PHI | | |
| .000 | -.3378 | -.3413 |
| 40.000 | -.3472 | -.3639 |

ALPHA ( 3) = 3.910 BETA ( 1) = -3.886 MACH = 1.3964 Q = 600.16 P = 439.71 RN/L = 2.9092

SECTION ( 1)BODY FLAP UPPER DEPENDENT VARIABLE CP

| X/LB | 1.0180 | 1.0460 |
|---|---|---|
| PHI | | |
| .000 | -.3389 | -.3488 |
| 40.000 | -.3309 | -.3417 |

ALPHA ( 3) = 3.912 BETA ( 2) = .174 MACH = 1.3964 Q = 600.16 P = 439.71 RN/L = 2.9092

SECTION ( 1)BODY FLAP UPPER DEPENDENT VARIABLE CP

| X/LB | 1.0180 | 1.0460 |
|---|---|---|
| PHI | | |
| .000 | -.3429 | -.3431 |
| 40.000 | -.3259 | -.3330 |

ALPHA ( 3) = 3.916 BETA ( 3) = 4.236 MACH = 1.3964 Q = 600.16 P = 439.71 RN/L = 2.9092

SECTION ( 1)BODY FLAP UPPER DEPENDENT VARIABLE CP

| X/LB | 1.0180 | 1.0460 |
|---|---|---|
| PHI | | |
| .000 | -.3498 | -.3543 |
| 40.000 | -.3328 | -.3423 |

AMES 11-073(OA148) -140A/B/C/R ORB BODY FLAP UP (XEBF52)

ALPHA ( 4) = 7.922 BETA ( 1) = -3.876 MACH = 1.3965 Q = 599.65 P = 439.24 RN/L = 2.9107

SECTION ( 1)BODY FLAP UPPER DEPENDENT VARIABLE CP

| X/LB | 1.0180 | 1.0460 |
|---|---|---|
| PHI | | |
| .000 | -.3635 | -.3659 |
| 40.000 | -.3362 | -.3323 |

ALPHA ( 4) = 7.930 BETA ( 2) = .169 MACH = 1.3965 Q = 599.65 P = 439.24 RN/L = 2.9107

SECTION ( 1)BODY FLAP UPPER DEPENDENT VARIABLE CP

| X/LB | 1.0180 | 1.0460 |
|---|---|---|
| PHI | | |
| .000 | -.3579 | -.3636 |
| 40.000 | -.3281 | -.3314 |

ALPHA ( 4) = 7.931 BETA ( 3) = 4.235 MACH = 1.3965 Q = 599.65 P = 439.24 RN/L = 2.9107

SECTION ( 1)BODY FLAP UPPER DEPENDENT VARIABLE CP

| X/LB | 1.0180 | 1.0460 |
|---|---|---|
| PHI | | |
| .000 | -.3595 | -.3645 |
| 40.000 | -.3277 | -.3421 |

ALPHA ( 5) = 11.858 BETA ( 1) = -3.866 MACH = 1.3951 Q = 600.34 P = 440.65 RN/L = 2.9166

SECTION ( 1)BODY FLAP UPPER DEPENDENT VARIABLE CP

| X/LB | 1.0180 | 1.0460 |
|---|---|---|
| PHI | | |
| .000 | -.3693 | -.3695 |
| 40.000 | -.3400 | -.3329 |

ALPHA ( 5) = 11.867 BETA ( 2) = .167 MACH = 1.3951 Q = 600.34 P = 440.65 RN/L = 2.9166

SECTION ( 1)BODY FLAP UPPER DEPENDENT VARIABLE CP

| X/LB | 1.0180 | 1.0460 |
|---|---|---|
| PHI | | |
| .000 | -.3650 | -.3697 |
| 40.000 | -.3352 | -.3345 |

AMES 11-073(OA148) -140A/B/C/R ORB BODY FLAP UP (XE8F52)

ALPHA ( 5) = 11.865 BETA ( 3) = 4.248 MACH = 1.3951 Q = 600.34 P = 440.65 RN/L = 2.9166

SECTION ( 1)BODY FLAP UPPER DEPENDENT VARIABLE CP

| X/LB | 1.0180 | 1.0460 |
|---|---|---|
| PHI | | |
| .000 | -.3652 | -.3706 |
| 40.000 | -.3496 | -.3720 |

ALPHA ( 6) = 15.826 BETA ( 1) = -3.845 MACH = 1.3947 Q = 600.64 P = 441.12 RN/L = 2.9102

SECTION ( 1)BODY FLAP UPPER DEPENDENT VARIABLE CP

| X/LB | 1.0180 | 1.0460 |
|---|---|---|
| PHI | | |
| .000 | -.3663 | -.3623 |
| 40.000 | -.3689 | -.3750 |

ALPHA ( 6) = 15.841 BETA ( 2) = .16[illegible] MACH = 1.3947 Q = 600.64 P = 441.12 RN/L = 2.9102

SECTION ( 1)BODY FLAP UPPER DEPENDENT VARIABLE CP

| X/LB | 1.0180 | 1.0460 |
|---|---|---|
| PHI | | |
| .000 | -.3627 | -.3535 |
| 40.000 | -.3931 | -.4077 |

ALPHA ( 6) = 15.833 BETA ( 3) = 4.274 MACH = 1.3947 Q = 600.64 P = 441.12 RN/L = 2.9102

SECTION ( 1)BODY FLAP UPPER DEPENDENT VARIABLE CP

| X/LB | 1.0180 | 1.0460 |
|---|---|---|
| PHI | | |
| .000 | -.3634 | -.3405 |
| 40.000 | -.3936 | -.4107 |

AMES 11-073(CA148) -140A/B/C/R ORB BODY FLAP UP (XE8F53) ( 05 AUG 75 )

REFERENCE DATA

SREF = 2690.0000 SQ.FT. XMRP = 1076.6900 IN. XO
LREF = 474.8000 IN. YMRP = .0000 IN. YO
BREF = 936.0680 IN. ZMRP = 375.0000 IN. ZO
SCALE = .0300

PARAMETRIC DATA

RUDDER = -10.000 SPDBRK = 55.000
BDFLAP = 16.300 L-ELVN = -4.000
R-ELVN = 4.000 MACH = 1.250

ALPHA ( 1) = -4.036 BETA ( 1) = -3.860 MACH = 1.2435 Q = 597.22 P = 551.79 RN/L = 3.0068

SECTION ( 1)BODY FLAP UPPER DEPENDENT VARIABLE CP

| X/LB | 1.0180 | 1.0460 |
|---|---|---|
| PHI | | |
| .000 | -.3907 | -.3916 |
| 40.000 | -.4332 | -.4469 |

ALPHA ( 1) = -4.029 BETA ( 2) = .182 MACH = 1.2435 Q = 597.22 P = 551.79 RN/L = 3.0068

SECTION ( 1)BODY FLAP UPPER DEPENDENT VARIABLE CP

| X/LB | 1.0180 | 1.0460 |
|---|---|---|
| PHI | | |
| .000 | -.3959 | -.3918 |
| 40.000 | -.4388 | -.4510 |

ALPHA ( 1) = -4.033 BETA ( 3) = 4.271 MACH = 1.2435 Q = 597.22 P = 551.79 RN/L = 3.0068

SECTION ( 1)BODY FLAP UPPER DEPENDENT VARIABLE CP

| X/LB | 1.0180 | 1.0460 |
|---|---|---|
| PHI | | |
| .000 | -.4018 | -.4049 |
| 40.000 | -.4298 | -.4466 |

ALPHA ( 2) = -.011 BETA ( 1) = -3.861 MACH = 1.2454 Q = 599.32 P = 552.04 RN/L = 3.0119

SECTION ( 1)BODY FLAP UPPER DEPENDENT VARIABLE CP

| X/LB | 1.0180 | 1.0460 |
|---|---|---|
| PHI | | |
| .000 | -.3960 | -.4007 |
| 40.000 | -.4269 | -.4392 |

AMES 11-073(OA148) -140A/B/C/R ORB BODY FLAP UP (XE8F53)

ALPHA ( 2) = .001 BETA ( 2) = .178 MACH = 1.2454 Q = 599.32 P = 552.04 RN/L = 3.0115

SECTION ( 1)BODY FLAP UPPER DEPENDENT VARIABLE CP

| X/LB | 1.0180 | 1.0460 |
|---|---|---|
| PHI | | |
| .000 | -.4022 | -.4111 |
| 40.000 | -.4225 | -.4343 |

ALPHA ( 2) = .000 BETA ( 3) = 4.247 MACH = 1.2454 Q = 599.32 P = 552.04 RN/L = 3.0119

SECTION ( 1)BODY FLAP UPPER DEPENDENT VARIABLE CP

| X/LB | 1.0180 | 1.0460 |
|---|---|---|
| PHI | | |
| .000 | -.4142 | -.4149 |
| 40.000 | -.4225 | -.4419 |

ALPHA ( 3) = 3.944 BETA ( 1) = -3.877 MACH = 1.2467 Q = 599.84 P = 551.34 RN/L = 3.0121

SECTION ( 1)BODY FLAP UPPER DEPENDENT VARIABLE CP

| X/LB | 1.0180 | 1.0460 |
|---|---|---|
| PHI | | |
| .000 | -.3853 | -.3930 |
| 40.000 | -.3638 | -.3718 |

ALPHA ( 3) = 3.945 BETA ( 2) = .180 MACH = 1.2467 Q = 599.84 P = 551.34 RN/L = 3.0121

SECTION ( 1)BODY FLAP UPPER DEPENDENT VARIABLE CP

| X/LB | 1.0180 | 1.0460 |
|---|---|---|
| PHI | | |
| .000 | -.3954 | -.3987 |
| 40.000 | -.3585 | -.3628 |

ALPHA ( 3) = 3.949 BETA ( 3) = 4.232 MACH = 1.2467 Q = 599.84 P = 551.34 RN/L = 3.0121

SECTION ( 1)BODY FLAP UPPER DEPENDENT VARIABLE CP

| X/LB | 1.0180 | 1.0460 |
|---|---|---|
| PHI | | |
| .000 | -.3965 | -.4000 |
| 40.000 | -.3690 | -.3712 |

AMES 11-073(OA148) -140A/B/C/R ORB BODY FLAP UP (XEBF53)

ALPHA ( 4) = 7.975 BETA ( 1) = -3.876 MACH = 1.2465 Q = 599.91 P = 551.57 RN/L = 3.0143

SECTION ( 1)BODY FLAP UPPER DEPENDENT VARIABLE CP

| X/LB | 1.0190 | 1.0460 |
|---|---|---|
| PHI | | |
| .000 | -.4080 | -.4101 |
| 40.000 | -.3704 | -.3706 |

ALPHA ( 4) = 7.918 BETA ( 2) = .169 MACH = 1.2465 Q = 599.91 P = 551.57 RN/L = 3.0143

SECTION ( 1)BODY FLAP UPPER DEPENDENT VARIABLE CP

| X/LB | 1.0180 | 1.0460 |
|---|---|---|
| PHI | | |
| .000 | -.4088 | -.4128 |
| 40.000 | -.3694 | -.3696 |

ALPHA ( 4) = 7.882 BETA ( 3) = 4.233 MACH = 1.2465 Q = 599.91 P = 551.57 RN/L = 3.0143

SECTION ( 1)BODY FLAP UPPER DEPENDENT VARIABLE CP

| X/LB | 1.0180 | 1.0460 |
|---|---|---|
| PHI | | |
| .000 | -.4119 | -.4168 |
| 40.000 | -.3715 | -.3812 |

ALPHA ( 5) = 11.916 BETA ( 1) = -3.857 MACH = 1.2482 Q = 600.48 P = 550.64 RN/L = 3.0151

SECTION ( 1)BODY FLAP UPPER DEPENDENT VARIABLE CP

| X/LB | 1.0180 | 1.0460 |
|---|---|---|
| PHI | | |
| .000 | -.4122 | -.4134 |
| 40.000 | -.3950 | -.3952 |

ALPHA ( 5) = 11.930 BETA ( 2) = .181 MACH = 1.2482 Q = 600.48 P = 550.64 RN/L = 3.0151

SECTION ( 1)BODY FLAP UPPER DEPENDENT VARIABLE CP

| X/LB | 1.0180 | 1.0460 |
|---|---|---|
| PHI | | |
| .000 | -.4160 | -.4231 |
| 40.000 | -.3908 | -.3990 |

ORIGINAL PAGE IS OF POOR QUALITY

AMES 11-073(OA148) -140A/B/C/R ORB BODY FLAP UP (XE8F53)

ALPHA ( 5) = 11.925 BETA ( 3) = 4.245 MACH = 1.2482 Q = 600.48 P = 550.64 RN/L = 3.0151

SECTION ( 1)BODY FLAP UPPER DEPENDENT VARIABLE CP

| X/LB | 1.0180 | 1.0460 |
|---|---|---|
| PHI | | |
| .000 | -.4227 | -.4336 |
| 40.000 | -.3930 | -.4053 |

AMES 11-073(OA148) -140A/B/C/R ORB BODY FLAP UP (XEBF34) ( 05 AUG 75 )

REFERENCE DATA

SREF = 2690.0000 SQ.FT. XMRP = 1076.6800 IN. XO
LREF = 474.8000 IN. YMRP = .0000 IN. YO
BREF = 936.0680 IN. ZMRP = 375.0000 IN. ZO
SCALE = .0300

PARAMETRIC DATA

RUDDER = -10.000 SPDBRK = 55.000
BDFLAP = 16.300 L-ELVN = -4.000
R-ELVN = 4.000 MACH = 1.100

ALPHA ( 1) = -3.970 BETA ( 1) = -3.853 MACH = 1.1014 Q = 600.89 P = 707.69 RN/L = 3.1837

SECTION ( 1)BODY FLAP UPPER DEPENDENT VARIABLE CP

| X/LB | 1.0180 | 1.0460 |
|---|---|---|
| PHI | | |
| .000 | -.3970 | -.4036 |
| 40.000 | -.4191 | -.4326 |

ALPHA ( 1) = -3.931 BETA ( 2) = .192 MACH = 1.1014 Q = 600.89 P = 707.69 RN/L = 3.1837

SECTION ( 1)BODY FLAP UPPER DEPENDENT VARIABLE CP

| X/LB | 1.0180 | 1.0460 |
|---|---|---|
| PHI | | |
| .000 | -.3961 | -.3982 |
| 40.000 | -.4201 | -.4527 |

ALPHA ( 1) = -3.991 BETA ( 3) = 4.263 MACH = 1.1014 Q = 600.89 P = 707.69 RN/L = 3.1837

SECTION ( 1)BODY FLAP UPPER DEPENDENT VARIABLE CP

| X/LB | 1.0180 | 1.0460 |
|---|---|---|
| PHI | | |
| .000 | -.4059 | -.4158 |
| 40.000 | -.4208 | -.4538 |

ALPHA ( 2) = .009 BETA ( 1) = -3.870 MACH = 1.1014 Q = 600.89 P = 707.69 RN/L = 3.1864

SECTION ( 1)BODY FLAP UPPER DEPENDENT VARIABLE CP

| X/LB | 1.0180 | 1.0460 |
|---|---|---|
| PHI | | |
| .000 | -.4051 | -.4179 |
| 40.000 | -.3938 | -.4032 |

AMES 11-073(DA148) -140A/B/C/R ORB BODY FLAP UP (XEBF54)

ALPHA ( 2) = .092 BETA ( 2) = .176 MACH = 1.1014 Q = 600.89 P = 707.69 RN/L = 3.1864

SECTION ( 1)BODY FLAP UPPER DEPENDENT VARIABLE CP

| X/LB | 1.0180 | 1.0460 |
|---|---|---|
| PHI | | |
| .000 | -.3917 | -.4035 |
| 40.000 | -.3967 | -.4206 |

ALPHA ( 2) = .026 BETA ( 3) = 4.243 MACH = 1.1014 Q = 600.89 P = 707.69 RN/L = 3.1864

SECTION ( 1)BODY FLAP UPPER DEPENDENT VARIABLE CP

| X/LB | 1.0180 | 1.0460 |
|---|---|---|
| PHI | | |
| .000 | -.4215 | -.4323 |
| 40.000 | -.3962 | -.4064 |

ALPHA ( 3) = 3.932 BETA ( 1) = -3.873 MACH = 1.1009 Q = 600.53 P = 707.91 RN/L = 3.1859

SECTION ( 1)BODY FLAP UPPER DEPENDENT VARIABLE CP

| X/LB | 1.0180 | 1.0460 |
|---|---|---|
| PHI | | |
| .000 | -.4262 | -.4309 |
| 40.000 | -.3962 | -.3965 |

ALPHA ( 3) = 3.933 BETA ( 2) = .171 MACH = 1.1009 Q = 600.53 P = 707.91 RN/L = 3.1859

SECTION ( 1)BODY FLAP UPPER DEPENDENT VARIABLE CP

| X/LB | 1.0180 | 1.0460 |
|---|---|---|
| PHI | | |
| .000 | -.4236 | -.4340 |
| 40.000 | -.3891 | -.4045 |

ALPHA ( 3) = 3.943 BETA ( 3) = 4.232 MACH = 1.1009 Q = 600.53 P = 707.91 RN/L = 3.1859

SECTION ( 1)BODY FLAP UPPER DEPENDENT VARIABLE CP

| X/LB | 1.0180 | 1.0460 |
|---|---|---|
| PHI | | |
| .000 | -.4390 | -.4413 |
| 40.000 | -.4175 | -.4201 |

AMES 11-073(OA1+8) -140A/B/C/R ORB BODY FLAP UP (XE8F54)

ALPHA ( 4) = 7.906 BETA ( 1) = -3.871 MACH = 1.1009 Q = 600.53 P = 707.91 RN/L = 3.1862

SECTION ( 1)BODY FLAP UPPER DEPENDENT VARIABLE CP

| X/LB | 1.0180 | 1.0460 |
|---|---|---|
| PHI | | |
| .000 | -.4550 | -.4584 |
| 40.000 | -.4190 | -.4140 |

ALPHA ( 4) = 8.006 BETA ( 2) = .170 MACH = 1.1009 Q = 600.53 P = 707.91 RN/L = 3.1862

SECTION ( 1)BODY FLAP UPPER DEPENDENT VARIABLE CP

| X/LB | 1.0180 | 1.0460 |
|---|---|---|
| PHI | | |
| .000 | -.4452 | -.4553 |
| 40.000 | -.4260 | -.4248 |

ALPHA ( 4) = 8.008 BETA ( 3) = 4.224 MACH = 1.1009 Q = 600.53 P = 707.91 RN/L = 3.1862

SECTION ( 1)BODY FLAP UPPER DEPENDENT VARIABLE CP

| X/LB | 1.0180 | 1.0460 |
|---|---|---|
| PHI | | |
| .000 | -.4578 | -.4567 |
| 40.000 | -.4437 | -.4361 |

ALPHA ( 5) = 11.922 BETA ( 1) = -3.854 MACH = 1.1005 Q = 600.31 P = 708.13 RN/L = 3.1832

SECTION ( 1)BODY FLAP UPPER DEPENDENT VARIABLE CP

| X/LB | 1.0180 | 1.0460 |
|---|---|---|
| PHI | | |
| .000 | -.4632 | -.4677 |
| 40.000 | -.4427 | -.4510 |

ALPHA ( 5) = 11.941 BETA ( 2) = .179 MACH = 1.1005 Q = 600.31 P = 708.13 RN/L = 3.1832

SECTION ( 1)BODY FLAP UPPER DEPENDENT VARIABLE CP

| X/LB | 1.0180 | 1.0460 |
|---|---|---|
| PHI | | |
| .000 | -.4453 | -.4505 |
| 40.000 | -.4347 | -.4486 |

AMES 11-073(OA148) -140A/B/C/R ORB BODY FLAP UP (XEBF54)

ALPHA ( 5) = 12.006 BETA ( 3) = 4.239 MACH = 1.1005 Q = 600.31 P = 708.13 IRN/L = 3.1832

SECTION : 1:BODY FLAP UPPER DEPENDENT VARIABLE CP

| X/LB | 1.0180 | 1.0460 |
|---|---|---|
| PHI | | |
| .000 | -.4744 | -.4779 |
| 40.000 | -.4649 | -.4647 |

AMES 11-073(OA148) -140A/B/C/R ORB BODY FLAP UP (XE8F55) ( 05 AUG 75 )

REFERENCE DATA

SREF = 2690.0000 SQ.FT. XMRP = 1076.6800 IN. XO
LREF = 474.8000 IN. YMRP = .0000 IN. YO
BREF = 933.0000 IN. ZMRP = 375.0000 IN. ZO
SCALE = .0300

PARAMETRIC DATA

RUDDER = -10.000 SPDBRK = 55.000
BDFLAP = 16.300 L-ELVN = -4.000
R-ELVN = 4.000 MACH = .900

ALPHA ( 1) = -3.986 BETA ( 1) = -3.861 MACH = .90063 Q = 600.64 P = 1057.8 RN/L = 3.5876

SECTION ( 1)BODY FLAP UPPER DEPENDENT VARIABLE CP

| X/LB | 1.0180 | 1.0460 |
|---|---|---|
| PHI | | |
| .000 | -.2985 | -.3016 |
| 40.000 | -.3205 | -.3683 |

ALPHA ( 1) = -3.902 BETA ( 2) = .179 MACH = .90063 Q = 600.64 P = 1057.8 RN/L = 3.5876

SECTION ( 1)BODY FLAP UPPER DEPENDENT VARIABLE CP

| X/LB | 1.0180 | 1.0460 |
|---|---|---|
| PHI | | |
| .000 | -.2977 | -.3041 |
| 40.000 | -.3312 | -.3617 |

ALPHA ( 1) = -3.962 BETA ( 3) = 4.262 MACH = .90063 Q = 600.64 P = 1057.8 RN/L = 3.5876

SECTION ( 1)BODY FLAP UPPER DEPENDENT VARIABLE CP

| X/LB | 1.0180 | 1.0460 |
|---|---|---|
| PHI | | |
| .000 | -.3082 | -.3188 |
| 40.000 | -.3136 | -.3365 |

ALPHA ( 2) = .074 BETA ( 1) = -3.874 MACH = .89883 Q = 599.16 P = 1059.5 RN/L = 3.5834

SECTION ( 1)BODY FLAP UPPER DEPENDENT VARIABLE CP

| X/LB | 1.0180 | 1.0460 |
|---|---|---|
| PHI | | |
| .000 | -.2989 | -.3039 |
| 40.000 | -.3112 | -.3347 |

AMES 11-073(OA148) -140A/B/C/R ORB BODY FLAP UP (X&BF55)

ALPHA ( 2) = .090 BETA ( 2) = .167 MACH = .89883 Q = 599.16 P = 1059.5 RN/L = 3.5834

SECTION ( 1)BODY FLAP UPPER DEPENDENT VARIABLE CP

| X/LB | 1.0180 | 1.0460 |
|---|---|---|
| PHI | | |
| .000 | -.2865 | -.3056 |
| 40.000 | -.2981 | -.3393 |

ALPHA ( 2 = .067 BETA ( 3) = 4.244 MACH = .89883 Q = 599.16 P = 1059.5 RN/L = 3.5834

SECTION ( 1)BODY FLAP UPPER DEPENDENT VARIABLE CP

| X/LB | 1.0180 | 1.0460 |
|---|---|---|
| PHI | | |
| .000 | -.2938 | -.3101 |
| 40.000 | -.3175 | -.3321 |

ALPHA ( 3) = 3.946 BETA ( 1) = -3.879 MACH = .89970 Q = 599.92 P = 1058.7 RN/L = 3.5860

SECTION ( 1)BODY FLAP UPPER DEPENDENT VARIABLE CP

| X/LB | 1.0180 | 1.0460 |
|---|---|---|
| PHI | | |
| .000 | -.3135 | -.3099 |
| 40.000 | -.2978 | -.3262 |

ALPHA ( 3) = 3.951 BETA ( 2) = .176 MACH = .89970 Q = 599.92 P = 1058.7 RN/L = 3.5860

SECTION ( 1)BODY FLAP UPPER DEPENDENT VARIABLE CP

| X/LB | 1.0180 | 1.0460 |
|---|---|---|
| PHI | | |
| .000 | -.2916 | -.3006 |
| 40.000 | -.2976 | -.3113 |

ALPHA ( 3) = 3.956 BETA ( 3) = 4.235 MACH = .89970 Q = 599.92 P = 1058.7 RN/L = 3.58[illegible]

SECTION ( 1)BODY FLAP UPPER DEPENDENT VARIABLE CP

| X/LB | 1.0180 | 1.0460 |
|---|---|---|
| PHI | | |
| .000 | -.2967 | -.3088 |
| 40.000 | -.2974 | -.3073 |

AMES 11-073(OA148) -140A/B/C/R ORB BODY FLAP UP (XE8F55)

ALPHA ( 4) = 7.893 BETA ( 1) = -3.876 MACH = .89863 Q = 599.02 P = 1059.8 RN/L = 3.5893

SECTION ( 1)BODY FLAP UPPER DEPENDENT VARIABLE CP

| X/LB | 1.0190 | 1.0460 |
|---|---|---|
| PHI | | |
| .000 | -.3095 | -.3099 |
| 40.000 | -.2948 | -.2979 |

ALPHA ( 4) = 8.030 BETA ( 2) = .173 MACH = .89863 Q = 599.02 P = 1059.8 RN/L = 3.5893

SECTION ( 1)BODY FLAP UPPER DEPENDENT VARIABLE CP

| X/LB | 1.0180 | 1.0460 |
|---|---|---|
| PHI | | |
| .000 | -.2999 | -.2983 |
| 40.000 | -.2744 | -.2860 |

ALPHA ( 4) = 8.015 BETA ( 3) = 4.230 MACH = .89863 Q = 599.02 P = 1059.8 RN/L = 3.5893

SECTION ( 1)BODY FLAP UPPER DEPENDENT VARIABLE CP

| X/LB | 1.0180 | 1.0460 |
|---|---|---|
| PHI | | |
| .000 | -.3116 | -.3079 |
| 40.000 | -.2777 | -.2821 |

ALPHA ( 5) = 11.973 BETA ( 1) = -3.861 MACH = .89910 Q = 599.49 P = 1059.5 RN/L = 3.5890

SECTION ( 1)BODY FLAP UPPER DEPENDENT VARIABLE CP

| X/LB | 1.0180 | 1.0460 |
|---|---|---|
| PHI | | |
| .000 | -.3333 | -.3317 |
| 40.000 | -.3031 | -.2936 |

ALPHA ( 5) = 11.987 BETA ( 2) = .182 MACH = .89910 Q = 599.49 P = 1059.5 RN/L = 3.5890

SECTION ( 1)BODY FLAP UPPER DEPENDENT VARIABLE CP

| X/LB | 1.0180 | 1.0460 |
|---|---|---|
| PHI | | |
| .000 | -.3149 | -.3170 |
| 40.000 | -.2841 | -.2919 |

ORIGINAL PAGE IS

AMES 11-073(OA148) -140A/B/C/R ORB BODY FLAP UP (XE8F55)

ALPHA ( 5) = 12.005 BETA ( 3) = 4.250 MACH = .89910 Q = 599.49 P = 1059.5 RN/L = 3.5890

SECTION ( 1)BODY FLAP UPPER DEPENDENT VARIABLE CP

| X/LB | 1.0150 | 1.0450 |
|---|---|---|
| PHI | | |
| .000 | -.3201 | -.3224 |
| 40.000 | -.2960 | -.2910 |

AMES 11-073(OA148) -140A/B/C/R ORB BODY FLAP UP (XE8F56) ( 05 AUG 75 )

REFERENCE DATA

SREF = 2690.0000 SQ.FT. XMRP = 1076.6800 IN. XO
LREF = 474.8000 IN. YMRP = .0000 IN. YO
BREF = 936.0680 IN. ZMRP = 375.0000 IN. ZO
SCALE = .0300

PARAMETRIC DATA

RUDDER = -10.000 SPDBRK = 55.000
BDFLAP = 16.300 L-ELVN = -4.000
R-ELVN = 4.000 MACH = .600

ALPHA ( 1) = -4.044 BETA ( 1) = -7.862 MACH = .59674 Q = 594.66 P = 2385.6 RN/L = 4.8797

SECTION ( 1)BODY FLAP UPPER DEPENDENT VARIABLE CP

| X/LB | 1.0180 | 1.0460 |
|---|---|---|
| PHI | | |
| .000 | -.2459 | -.2438 |
| 40.000 | -.2776 | -.3116 |

ALPHA ( 1) = -3.971 BETA ( 2) = -3.856 MACH = .59674 Q = 594.66 P = 2395.6 RN/L = 4.8797

SECTION ( 1)BODY FLAP UPPER DEPENDENT VARIABLE CP

| X/LB | 1.0180 | 1.0460 |
|---|---|---|
| PHI | | |
| .000 | -.2482 | -.2388 |
| 40.000 | -.2758 | -.3122 |

ALPHA ( 1) = -3.944 BETA ( 3) = .179 MACH = .59674 Q = 594.66 P = 2385.6 RN/L = 4.8797

SECTION ( 1)BODY FLAP UPPER DEPENDENT VARIABLE CP

| X/LB | 1.0180 | 1.0460 |
|---|---|---|
| PHI | | |
| .000 | -.2417 | -.2476 |
| 40.000 | -.2816 | -.3173 |

ALPHA ( 1) = -3.952 BETA ( 4) = 4.259 MACH = .59674 Q = 594.66 P = 2385.6 RN/L = 4.8797

SECTION ( 1)BODY FLAP UPPER DEPENDENT VARIABLE CP

| X/LB | 1.0180 | 1.0460 |
|---|---|---|
| PHI | | |
| .000 | -.2441 | -.2559 |
| 40.000 | -.2741 | -.3098 |

AMES 11-073(OA148) -140A/B/C/R ORB BODY FLAP UP (XE8F56)

ALPHA ( 1) = -3.967 BETA ( 5) = 8.330 MACH = .59674 Q = 594.66 P = 2385.6 RN/L = 4.8797

SECTION ( 1)BODY FLAP UPPER DEPENDENT VARIABLE CP

| X/LB | 1.0180 | 1.0460 |
|---|---|---|
| PHI | | |
| .000 | -.2586 | -.2585 |
| 40.000 | -.2652 | -.3058 |

ALPHA ( 2) = .082 BETA ( 1) = -7.901 MACH = .59728 Q = 595.74 P = 2385.6 RN/L = 4.8906

SECTION ( 1)BODY FLAP UPPER DEPENDENT VARIABLE CP

| X/LB | 1.0180 | 1.0460 |
|---|---|---|
| PHI | | |
| .000 | -.2538 | -.2498 |
| 40.000 | -.2774 | -.3117 |

ALPHA ( 2) = .093 BETA ( 2) = -3.873 MACH = .59728 Q = 595.74 P = 2385.6 RN/L = 4.8906

SECTION ( 1)BODY FLAP UPPER DEPENDENT VARIABLE CP

| X/LB | 1.0180 | 1.0460 |
|---|---|---|
| PHI | | |
| .000 | -.2435 | -.2529 |
| 40.000 | -.2802 | -.3016 |

ALPHA ( 2) = .095 BETA ( 3) = .179 MACH = .59728 Q = 595.74 P = 2385.6 RN/L = 4.8906

SECTION ( 1)BODY FLAP UPPER DEPENDENT VARIABLE CP

| X/LB | 1.0180 | 1.0460 |
|---|---|---|
| PHI | | |
| .000 | -.2493 | -.2620 |
| 40.000 | -.2754 | -.3055 |

ALPHA ( 2) = .092 BETA ( 4) = 4.242 MACH = .59728 Q = 595.74 P = 2385.6 RN/L = 4.8906

SECTION ( 1)BODY FLAP UPPER DEPENDENT VARIABLE CP

| X/LB | 1.0180 | 1.0460 |
|---|---|---|
| PHI | | |
| .000 | -.2477 | -.2568 |
| 40.000 | -.2792 | -.3113 |

AMES 11-073(OA148) -140A/B/C/R ORB BODY FLAP UP (XEBF56)

ALPHA ( 2) = .089 BETA ( 5) = 8.298 MACH = .59728 Q = 595.74 P = 2385.6 RN/L = 4.8906

SECTION ( 1)BODY FLAP UPPER DEPENDENT VARIABLE CP

| X/LB | 1.0180 | 1.0460 |
|---|---|---|
| PHI | | |
| .000 | -.2697 | -.2792 |
| 40.000 | -.2695 | -.2928 |

ALPHA ( 3) = 4.036 BETA ( 1) = -7.914 MACH = .59696 Q = 595.02 P = 2385.3 RN/L = 4.8897

SECTION ( 1)BODY FLAP UPPER DEPENDENT VARIABLE CP

| X/LB | 1.0180 | 1.0460 |
|---|---|---|
| PHI | | |
| .000 | -.2592 | -.2585 |
| 40.000 | -.2897 | -.3154 |

ALPHA ( 3) = 4.041 BETA ( 2) = -3.873 MACH = .59696 Q = 595.02 P = 2385.3 RN/L = 4.8897

SECTION ( 1)BODY FLAP UPPER DEPENDENT VARIABLE CP

| X/LB | 1.0180 | 1.0460 |
|---|---|---|
| PHI | | |
| .000 | -.2544 | -.2622 |
| 40.000 | -.2804 | -.3088 |

ALPHA ( 3) = 4.096 BETA ( 3) = .178 MACH = .59696 Q = 595.02 P = 2385.3 RN/L = 4.8897

SECTION ( 1)BODY FLAP UPPER DEPENDENT VARIABLE CP

| X/LB | 1.0180 | 1.0450 |
|---|---|---|
| PHI | | |
| .000 | -.2465 | -.2552 |
| 40.000 | -.2552 | -.2845 |

ALPHA ( 3) = 3.977 BETA ( 4) = 4.232 MACH = .59696 Q = 595.02 P = 2385.3 RN/L = 4.8897

SECTION ( 1)BODY FLAP UPPER DEPENDENT VARIABLE CP

| X/LB | 1.0180 | 1.0460 |
|---|---|---|
| PHI | | |
| .000 | -.2664 | -.2592 |
| 40.000 | -.2655 | -.2841 |

AMES 11-073(OA148) -140A/B/C/R ORB BODY FLAP UP (XE8F56)

ALPHA ( 3) = 4.011 BETA ( 5) = 8.279 MACH = .59696 Q = 595.02 P = 2385.3 RN/L = 4.8897

SECTION ( 1)BODY FLAP UPPER DEPENDENT VARIABLE CP

| X/LB | 1.0180 | 1.0460 |
|---|---|---|
| PHI | | |
| .000 | -.2820 | -.2973 |
| 40.000 | -.2508 | -.2648 |

ALPHA ( 4) = 8.004 BETA ( 1) = -7.903 MACH = .59678 Q = 594.78 P = 2385.7 RN/L = 4.8929

SECTION ( 1)BODY FLAP UPPER DEPENDENT VARIABLE CP

| X/LB | 1.0180 | 1.0460 |
|---|---|---|
| PHI | | |
| .000 | -.2636 | -.2683 |
| 40.000 | -.2950 | -.3307 |

ALPHA ( 4) = 8.017 BETA ( 2) = -3.872 MACH = .59678 Q = 594.78 P = 2385.7 RN/L = 4.8929

SECTION ( 1)BODY FLAP UPPER DEPENDENT VARIABLE CP

| X/LB | 1.0180 | 1.0460 |
|---|---|---|
| PHI | | |
| .000 | -.2628 | -.2689 |
| 40.000 | -.2763 | -.3053 |

ALPHA ( 4) = 7.965 BETA ( 3) = .166 MACH = .59678 Q = 594.78 P = 2385.7 RN/L = 4.8929

SECTION ( 1)BODY FLAP UPPER DEPENDENT VARIABLE CP

| X/LB | 1.0180 | 1.0460 |
|---|---|---|
| PHI | | |
| .000 | -.2583 | -.2616 |
| 40.000 | -.2580 | -.2703 |

ALPHA ( 4) = 7.931 BETA ( 4) = 4.229 MACH = .59678 Q = 594.78 P = 2385.7 RN/L = 4.8929

SECTION ( 1)BODY FLAP UPPER DEPENDENT VARIABLE CP

| X/LB | 1.0180 | 1.0460 |
|---|---|---|
| PHI | | |
| .000 | -.2671 | -.2813 |
| 40.000 | -.2463 | -.2548 |

AMES 11-073(OA148) -140A/B/C/R ORB BODY FLAP UP (XE8F56)

ALPHA ( 4) = 7.987 BETA ( 5) = 8.286 MACH = .59678 Q = 594.78 P = 2385.7 RN/L = 4.8929

SECTION ( 1)BODY FLAP UPPER DEPENDENT VARIABLE CP

| X/LB | 1.0180 | 1.0460 |
|---|---|---|
| PHI | | |
| .000 | -.3038 | -.3035 |
| 40.000 | -.2516 | -.2570 |

ALPHA ( 5) = 11.920 BETA ( 1) = -7.867 MACH = .59670 Q = 594.67 P = 2385.8 RN/L = 4.8946

SECTION ( 1)BODY FLAP UPPER DEPENDENT VARIABLE CP

| X/LB | 1.0180 | 1.0460 |
|---|---|---|
| PHI | | |
| .000 | -.2579 | -.2770 |
| 40.000 | -.2900 | -.3256 |

ALPHA ( 5) = 11.942 BETA ( 2) = -3.850 MACH = .59670 Q = 594.67 P = 2385.8 RN/L = 4.8946

SECTION ( 1)BODY FLAP UPPER DEPENDENT VARIABLE CP

| X/LB | 1.0180 | 1.0460 |
|---|---|---|
| PHI | | |
| .000 | -.2740 | -.2875 |
| 40.000 | -.2669 | -.2867 |

ALPHA ( 5) = 12.055 BETA ( 3) = .165 MACH = .59670 Q = 594.67 P = 2385.8 RN/L = 4.8946

SECTION ( 1)BODY FLAP UPPER DEPENDENT VARIABLE CP

| X/LB | 1.0180 | 1.0460 |
|---|---|---|
| PHI | | |
| .000 | -.2680 | -.2675 |
| 40.000 | -.2434 | -.2578 |

ALPHA ( 5) = 12.053 BETA ( 4) = 4.239 MACH = .59670 Q = 594.67 P = 2385.8 RN/L = 4.8946

SECTION ( 1)BODY FLAP UPPER DEPENDENT VARIABLE CP

| X/LB | 1.0180 | 1.0460 |
|---|---|---|
| PHI | | |
| .000 | -.2895 | -.2808 |
| 40.000 | -.2382 | -.2557 |

AMES 11-073(OA148) -140A/B/C/R ORB BODY FLAP UP (XE8F56)

ALPHA ( 5) = 12.101 BETA ( 5) = 8.299 MACH = .59670 Q = 594.67 P = 2385.8 RN/L = 4.8946

SECTION ( 1)BODY FLAP UPPER DEPENDENT VARIABLE CP

| X/LB | 1.0180 | 1.0460 |
|---|---|---|
| PHI | | |
| .000 | -.2812 | -.2899 |
| 90.000 | -.2411 | -.2791 |

AMES 11-073(OA148) -140A/B/C/R ORB BODY FLAP UP (XEBF57) ( 05 AUG 75 )

REFERENCE DATA

SREF = 2690.0000 SQ.FT. XMRP = 1076.6800 IN. XO
LREF = 474.8000 IN. YMRP = .0000 IN. YO
BREF = 936.0680 IN. ZMRP = 375.0000 IN. ZO
SCALE = .0300

PARAMETRIC DATA

RUDDER = 10.000 SPDBRK = 55.000
BDFLAP = 16.300 L-ELVN = 4.000
R-ELVN = -4.000 MACH = 1.400

ALPHA ( 1) = -4.026 BETA ( 1) = -3.843 MACH = 1.3927 Q = 599.59 P = 441.59 RN/L = 2.9055

SECTION ( 1)BODY FLAP UPPER DEPENDENT VARIABLE CP

| X/LB | 1.0180 | 1.0460 |
|---|---|---|
| PHI | | |
| .000 | -.3184 | -.3125 |
| 40.000 | -.3406 | -.3496 |

ALPHA ( 1) = -3.938 BETA ( 2) = .202 MACH = 1.3927 Q = 599.59 P = 441.59 RN/L = 2.9055

SECTION ( 1)BODY FLAP UPPER DEPENDENT VARIABLE CP

| X/LB | 1.0180 | 1.0460 |
|---|---|---|
| PHI | | |
| .000 | -.3240 | -.3110 |
| 40.000 | -.3370 | -.3534 |

ALPHA ( 1) = -4.001 BETA ( 3) = 4.282 MACH = 1.3927 Q = 599.59 P = 441.59 RN/L = 2.9055

SECTION ( 1)BODY FLAP UPPER DEPENDENT VARIABLE CP

| X/LB | 1.0180 | 1.0460 |
|---|---|---|
| PHI | | |
| .000 | -.3314 | -.3269 |
| 40.000 | -.3340 | -.3497 |

ALPHA ( 2) = .015 BETA ( 1) = -3.863 MACH = 1.3931 Q = 599.59 P = 441.36 RN/L = 2.9062

SECTION ( 1)BODY FLAP UPPER DEPENDENT VARIABLE CP

| X/LB | 1.0180 | 1.0460 |
|---|---|---|
| PHI | | |
| .000 | -.3324 | -.3315 |
| 40.000 | -.3457 | -.3544 |

AMES 11-073(OA148) -140A/B/C/R ORB BODY FLAP UP (XE8F57)

ALPHA ( 2) = .021 BETA ( 2) = .195 MACH = 1.3931 Q = 599.59 P = 441.36 RN/L = 2.9062

SECTION ( 1)BODY FLAP UPPER DEPENDENT VARIABLE CP

| X/LB | 1.0180 | 1.0460 |
|---|---|---|
| PHI | | |
| .000 | -.3344 | -.3259 |
| 40.000 | -.3425 | -.3569 |

ALPHA ( 2) = .016 BETA ( 3) = 4.262 MACH = 1.3931 Q = 599.59 P = 441.36 RN/L = 2.9062

SECTION ( 1)BODY FLAP UPPER DEPENDENT VARIABLE CP

| X/LB | 1.0180 | 1.0460 |
|---|---|---|
| PHI | | |
| .000 | -.3375 | -.3332 |
| 40.000 | -.3476 | -.3628 |

ALPHA ( 3) = 3.900 BETA ( 1) = -3.867 MACH = 1.3926 Q = 599.48 P = 441.59 RN/L = 2.9063

SECTION ( 1)BODY FLAP UPPER DEPENDENT VARIABLE CP

| X/LB | 1.0180 | 1.0460 |
|---|---|---|
| PHI | | |
| .000 | -.3431 | -.3481 |
| 40.000 | -.3512 | -.3609 |

ALPHA ( 3) = 4.005 BETA ( 2) = .197 MACH = 1.3926 Q = 599.48 P = 441.59 RN/L = 2.9063

SECTION ( 1)BODY FLAP UPPER DEPENDENT VARIABLE CP

| X/LB | 1.0180 | 1.0460 |
|---|---|---|
| PHI | | |
| .000 | -.3458 | -.3477 |
| 40.000 | -.3479 | -.3609 |

ALPHA ( 3) = 3.907 BETA ( 3) = 4.252 MACH = 1.3926 Q = 599.48 P = 441.59 RN/L = 2.9063

SECTION ( 1)BODY FLAP UPPER DEPENDENT VARIABLE CP

| X/LB | 1.0180 | 1.0460 |
|---|---|---|
| PHI | | |
| .000 | -.3384 | -.3414 |
| 40.000 | -.3464 | -.3668 |

AMES 11-073(OA148) -140A/B/C/R ORB BODY FLAP UP (XEBF57)

ALPHA ( 4) = 7.945 BETA ( 1) = -3.862 MACH = 1.3931 Q = 599.59 P = 441.36 RN/L = 2.8969

SECTION ( 1)BODY FLAP UPPER DEPENDENT VARIABLE CP

| X/LB | 1.0180 | 1.0460 |
|---|---|---|
| PHI | | |
| .000 | -.3568 | -.3591 |
| 40.000 | -.3698 | -.3783 |

ALPHA ( 4) = 7.917 BETA ( 2) = .187 MACH = 1.3931 Q = 599.59 P = 441.36 RN/L = 2.8969

SECTION ( 1)BODY FLAP UPPER DEPENDENT VARIABLE CP

| X/LB | 1.0180 | 1.0460 |
|---|---|---|
| PHI | | |
| .000 | -.3542 | -.3561 |
| 40.000 | -.3646 | -.3715 |

ALPHA ( 4) = 7.849 BETA ( 3) = 4.251 MACH = 1.3931 Q = 599.59 P = 441.36 RN/L = 2.8969

SECTION ( 1)BODY FLAP UPPER DEPENDENT VARIABLE CP

| X/LB | 1.0180 | 1.0460 |
|---|---|---|
| PHI | | |
| .000 | -.3665 | -.3738 |
| 40.000 | -.3686 | -.3802 |

ALPHA ( 5) = 11.907 BETA ( 1) = -3.847 MACH = 1.3946 Q = 600.23 P = 440.88 RN/L = 2.9052

SECTION ( 1)BODY FLAP UPPER DEPENDENT VARIABLE CP

| X/LB | 1.0180 | 1.0460 |
|---|---|---|
| PHI | | |
| .000 | -.3537 | -.3409 |
| 40.000 | -.3781 | -.3916 |

ALPHA ( 5) = 11.890 BETA ( 2) = .186 MACH = 1.3946 Q = 600.23 P = 440.88 RN/L = 2.9052

SECTION ( 1)BODY FLAP UPPER DEPENDENT VARIABLE CP

| X/LB | 1.0180 | 1.0460 |
|---|---|---|
| PHI | | |
| .000 | -.3563 | -.3692 |
| 40.000 | -.3810 | -.3845 |

AMES 11-073(OA148) -140A/B/C/R ORB BODY FLAP UP (XE8F57)

ALPHA ( 5) = 11.999 BETA ( 3) = 4.265 MACH = 1.3946 Q = 600.23 P = 440.88 RN/L = 2.9052

SECTION : 1)BODY FLAP UPPER DEPENDENT VARIABLE CP

| X/LB | 1.0180 | 1.0460 |
|---|---|---|
| PHI | | |
| .000 | -.3779 | -.3798 |
| 40.000 | -.3750 | -.3840 |

ALPHA ( 6) = 15.871 BETA ( 1) = -3.822 MACH = 1.3964 Q = 598.94 P = 438.77 RN/L = 2.9066

SECTION : 1)BODY FLAP UPPER DEPENDENT VARIABLE CP

| X/LB | 1.0180 | 1.0460 |
|---|---|---|
| PHI | | |
| .000 | -.3572 | -.3377 |
| 40.000 | -.3802 | -.4015 |

ALPHA ( 6) = 15.883 BETA ( 2) = .187 MACH = 1.3964 Q = 598.94 P = 438.77 RN/L = 2.9066

SECTION : 1)BODY FLAP UPPER DEPENDENT VARIABLE CP

| X/LB | 1.0180 | 1.0460 |
|---|---|---|
| PHI | | |
| .000 | -.3697 | -.3505 |
| 40.000 | -.4012 | -.4204 |

ALPHA ( 6) = 15.915 BETA ( 3) = 4.292 MACH = 1.3964 Q = 598.94 P = 438.77 RN/L = 2.9066

SECTION : 1)BODY FLAP UPPER DEPENDENT VARIABLE CP

| X/LB | 1.0180 | 1.0460 |
|---|---|---|
| PHI | | |
| .000 | -.3680 | -.3492 |
| 40.000 | -.4003 | -.4257 |

AMES 11-073(OA148) -140A/B/C/R ORB BODY FLAP UP (XEBF58) ( 05 AUG 75 )

REFERENCE DATA

SREF = 2590.0000 SQ.FT. XMRP = 1076.6800 IN. XO
LREF = 474.0000 IN. YMRP = .0000 IN. YO
BREF = 555.0000 IN. ZMRP = 375.0000 IN. ZO
SCALE = .0300

PARAMETRIC DATA

RUDDER = 10.000 SPDBRK = 55.000
BDFLAP = 15.300 L-ELVN = -4.000
R-ELVN = -4.000 MACH = 1.250

ALPHA ( 1) = -4.015 BETA ( 1) = -3.834 MACH = 1.2474 Q = 600.07 P = 550.87 RN/L = 3.0101

SECTION ( 1)BODY FLAP UPPER DEPENDENT VARIABLE CP

| X/LB | 1.0180 | 1.0460 |
|---|---|---|
| PHI | | |
| .000 | -.3580 | -.3538 |
| 40.000 | -.3711 | -.3857 |

ALPHA ( 1) = -4.012 BETA ( 2) = .202 MACH = 1.2474 Q = 600.07 P = 550.87 RN/L = 3.0101

SECTION ( 1)BODY FLAP UPPER DEPENDENT VARIABLE CP

| X/LB | 1.0180 | 1.0460 |
|---|---|---|
| PHI | | |
| .000 | -.3532 | -.3529 |
| 40.000 | -.3524 | -.3801 |

ALPHA ( 1) = -4.007 BETA ( 3) = 4.280 MACH = 1.2474 Q = 600.07 P = 550.87 RN/L = 3.0101

SECTION ( 1)BODY FLAP UPPER DEPENDENT VARIABLE CP

| X/LB | 1.0180 | 1.0460 |
|---|---|---|
| PHI | | |
| .000 | -.3656 | -.3692 |
| 40.000 | -.3587 | -.3952 |

ALPHA ( 2) = .035 BETA ( 1) = -3.858 MACH = 1.2470 Q = 599.89 P = 551.11 RN/L = 3.0093

SECTION ( 1)BODY FLAP UPPER DEPENDENT VARIABLE CP

| X/LB | 1.0180 | 1.0460 |
|---|---|---|
| PHI | | |
| .000 | -.3720 | -.3699 |
| 40.000 | -.3829 | -.3917 |

ORIGINAL PAGE IS
OF POOR QUALITY

AMES 11-073(OA148) -140A/B/C/H ORB BODY FLAP UP (XEBF58)

ALPHA ( 2) = .040 BETA ( 2) = .189 MACH = 1.2470 Q = 599.39 P = 551.11 RN/L = 3.0093

SECTION ( 1)BODY FLAP UPPER DEPENDENT VARIABLE CP

| X/LB | 1.0180 | 1.0460 |
|---|---|---|
| PHI | | |
| .000 | -.3614 | -.3597 |
| +0.000 | -.3774 | -.3916 |

ALPHA ( 2) = .037 BETA ( 3) = 4.261 MACH = 1.2470 Q = 599.89 P = 551.11 RN/L = 3.0093

SECTION ( 1)BODY FLAP UPPER DEPENDENT VARIABLE CP

| X/LB | 1.0180 | 1.0460 |
|---|---|---|
| PHI | | |
| .000 | -.3725 | -.3746 |
| +0.000 | -.3748 | -.3956 |

ALPHA ( 3) = 3.928 BETA ( 1) = -3.861 MACH = 1.2467 Q = 599.84 P = 551.34 RN/L = 3.0120

SECTION ( 1)BODY FLAP UPPER DEPENDENT VARIABLE CP

| X/LB | 1.0180 | 1.0460 |
|---|---|---|
| PHI | | |
| .000 | -.3848 | -.3927 |
| +0.000 | -.3957 | -.4054 |

ALPHA ( 3) = 3.929 BETA ( 2) = .192 MACH = 1.2467 Q = 599.84 P = 551.34 RN/L = 3.0120

SECTION ( 1)BODY FLAP UPPER DEPENDENT VARIABLE CP

| X/LB | 1.0180 | 1.0460 |
|---|---|---|
| PHI | | |
| .000 | -.3941 | -.4014 |
| +0.000 | -.4[illegible]9 | -.4201 |

ALPHA ( 3) = 3.933 BETA ( 3) = 4.251 MACH = 1.2467 Q = 599.84 P = 551.34 RN/L = 3.0120

SECTION ( 1)BODY FLAP UPPER DEPENDENT VARIABLE CP

| X/LB | 1.0180 | 1.0460 |
|---|---|---|
| PHI | | |
| .000 | -.3913 | -.3853 |
| +0.000 | -.3922 | -.4104 |

AMES 11-073(OA148) -140A/B/C/R ORB BODY FLAP UP (XE8F58)

ALPHA ( 4) = 7.966 BETA ( 1) = -3.855 MACH = 1.2463 Q = 599.67 P = 551.57 RN/L = 3.0105

SECTION ( 1)BODY FLAP UPPER DEPENDENT VARIABLE CP

| X/LB | 1.0180 | 1.0460 |
|---|---|---|
| PHI | | |
| .000 | -.4075 | -.4127 |
| 40.000 | -.4187 | -.4319 |

ALPHA ( 4) = 7.970 BETA ( 2) = .187 MACH = 1.2463 Q = 599.67 P = 551.57 RN/L = 3.0105

SECTION ( 1)BODY FLAP UPPER DEPENDENT VARIABLE CP

| X/LB | 1.0180 | 1.0460 |
|---|---|---|
| PHI | | |
| .000 | -.4058 | -.4165 |
| 40.000 | -.4167 | -.4314 |

ALPHA ( 4) = 7.894 BETA ( 3) = 4.250 MACH = 1.2463 Q = 599.67 P = 551.57 RN/L = 3.0105

SECTION ( 1)BODY FLAP UPPER DEPENDENT VARIABLE CP

| X/LB | 1.0180 | 1.0460 |
|---|---|---|
| PHI | | |
| .000 | -.4121 | -.4180 |
| 40.000 | -.4180 | -.4308 |

ALPHA ( 5) = 11.923 BETA ( 1) = -3.838 MACH = 1.2454 Q = 599.32 P = 552.04 RN/L = 3.0114

SECTION ( 1)BODY FLAP UPPER DEPENDENT VARIABLE CP

| X/LB | 1.0180 | 1.0460 |
|---|---|---|
| PHI | | |
| .000 | -.4282 | -.4365 |
| 40.000 | -.4327 | -.4566 |

ALPHA ( 5) = 11.931 BETA ( 2) = .197 MACH = 1.2454 Q = 599.32 P = 552.04 RN/L = 3.0114

SECTION ( 1)BODY FLAP UPPER DEPENDENT VARIABLE CP

| X/LB | 1.0180 | 1.0460 |
|---|---|---|
| PHI | | |
| .000 | -.4207 | -.4186 |
| 40.000 | -.4255 | -.4504 |

AMES 11-073(OA148) -140A/B/C/R ORB BODY FLAP UP (XEBF58)

ALPHA ( 5) = 11.925 BETA ( 3) = 4.259 MACH = 1.2454 Q = 599.32 P = 552.04 RN/L = 3.0114

SECTION : 1)BODY FLAP UPPER DEPENDENT VARIABLE CP

| X/LB | 1.0180 | 1.0460 |
|---|---|---|
| PHI | | |
| .000 | -.4036 | -.4207 |
| 40.000 | -.4228 | -.4532 |

AMES 11-073(OA148) -140A/B/C/R ORB BODY FLAP UP (XE8F59) ( 05 AUG 75 )

REFERENCE DATA

SREF = 2590.0000 SQ.FT. XMRP = 1076.6800 IN. XO
LREF = 474.6000 IN. YMRP = .0000 IN. YO
BREF = 935.0990 IN. ZMRP = 375.0000 IN. ZO
SCALE = .0300

PARAMETRIC DATA

RUDDER = 10.000 SPDBRK = 55.000
BDFLAP = 16.300 L-ELVN = 4.000
R-ELVN = -4.000 MACH = 1.100

ALPHA ( 1) = -4.026 BETA ( 1) = -3.831 MACH = 1.1006 Q = 600.08 P = 707.67 RN/L = 3.1805

SECTION ( 1)BODY FLAP UPPER DEPENDENT VARIABLE CP

| X/LB | 1.0180 | 1.0460 |
|---|---|---|
| PHI | | |
| .000 | -.4082 | -.4117 |
| 40.000 | -.4257 | -.4435 |

ALPHA ( 1) = -3.894 BETA ( 2) = .203 MACH = 1.1006 Q = 600.08 P = 707.67 RN/L = 3.1805

SECTION ( 1)BODY FLAP UPPER DEPENDENT VARIABLE CP

| X/LB | 1.0180 | 1.0460 |
|---|---|---|
| PHI | | |
| .000 | -.3990 | -.4042 |
| 40.000 | -.4068 | -.4271 |

ALPHA ( 1) = -4.013 BETA ( 3) = 4.281 MACH = 1.1008 Q = 600.08 P = 707.67 RN/L = 3.1805

SECTION ( 1)BODY FLAP UPPER DEPENDENT VARIABLE CP

| X/LB | 1.0180 | 1.0460 |
|---|---|---|
| PHI | | |
| .000 | -.4016 | -.4090 |
| 40.000 | -.4180 | -.4502 |

ALPHA ( 2) = .051 BETA ( 1) = -3.852 MACH = 1.1008 Q = 600.03 P = 707.43 RN/L = 3.1794

SECTION ( 1)BODY FLAP UPPER DEPENDENT VARIABLE CP

| X/LB | 1.0180 | 1.0460 |
|---|---|---|
| PHI | | |
| .000 | -.4189 | -.4298 |
| 40.000 | -.4343 | -.4457 |

AMES 11-073(OA148) -140A/B/C/R ORB BODY FLAP UP (XE8F59)

ALPHA ( 2) = .053 BETA ( 2) = .191 MACH = 1.1008 Q = 600.03 P = 707.43 RN/L = 3.1794

SECTION ( 1)BODY FLAP UPPER DEPENDENT VARIABLE CP

| X/LB | 1.0180 | 1.0460 |
|---|---|---|
| PHI | | |
| .000 | -.3997 | -.4016 |
| 40.000 | -.4158 | -.4371 |

ALPHA ( 2) = .049 BETA ( 3) = 4.255 MACH = 1.1008 Q = 600.03 P = 707.43 RN/L = 3.1794

SECTION ( 1)BODY FLAP UPPER DEPENDENT VARIABLE CP

| X/LB | 1.0180 | 1.0460 |
|---|---|---|
| PHI | | |
| .000 | -.4001 | -.4046 |
| 40.000 | -.4169 | -.4443 |

ALPHA ( 3) = 3.965 BETA ( 1) = -3.853 MACH = 1.1009 Q = 600.17 P = 707.44 RN/L = 3.1827

SECTION ( 1)BODY FLAP UPPER DEPENDENT VARIABLE CP

| X/LB | 1.0180 | 1.0460 |
|---|---|---|
| PHI | | |
| .000 | -.4283 | -.4298 |
| 40.000 | -.4369 | -.4513 |

ALPHA ( 3) = 3.964 BETA ( 2) = .193 MACH = 1.1009 Q = 600.17 P = 707.44 RN/L = 3.1827

SECTION ( 1)BODY FLAP UPPER DEPENDENT VARIABLE CP

| X/LB | 1.0180 | 1.0460 |
|---|---|---|
| PHI | | |
| .000 | -.4252 | -.4415 |
| 40.000 | -.4432 | -.4552 |

ALPHA ( 3) = 3.966 BETA ( 3) = 4.249 MACH = 1.1009 Q = 600.17 P = 707.44 RN/L = 3.1827

SECTION ( 1)BODY FLAP UPPER DEPENDENT VARIABLE CP

| X/LB | 1.0180 | 1.0460 |
|---|---|---|
| PHI | | |
| .000 | -.4227 | -.4320 |
| 40.000 | -.4428 | -.4497 |

AMES 11-073(OA148) -140A/B/C/R ORB BODY FLAP UP (XE8F59)

ALPHA ( 4) = 7.908 BETA ( 1) = -3.848 MACH = 1.0993 Q = 599.26 P = 708.35 RN/L = 3.1817

SECTION ( 1)BODY FLAP UPPER DEPENDENT VARIABLE CP

| X/LB | 1.0180 | 1.0460 |
|---|---|---|
| PHI | | |
| .000 | -.4544 | -.4503 |
| 40.000 | -.4586 | -.4776 |

ALPHA ( 4) = 7.912 BETA ( 2) = .189 MACH = 1.0993 Q = 599.26 P = 708.35 RN/L = 3.1817

SECTION ( 1)BODY FLAP UPPER DEPENDENT VARIABLE CP

| X/LB | 1.0180 | 1.0460 |
|---|---|---|
| PHI | | |
| .000 | -.4353 | -.4399 |
| 40.000 | -.4479 | -.4732 |

ALPHA ( 4) = 7.911 BETA ( 3) = 4.247 MACH = 1.0993 Q = 599.26 P = 708.35 RN/L = 3.1817

SECTION ( 1)BODY FLAP UPPER DEPENDENT VARIABLE CP

| X/LB | 1.0180 | 1.0460 |
|---|---|---|
| PHI | | |
| .000 | -.4516 | -.4699 |
| 40.000 | -.4671 | -.4852 |

ALPHA ( 5) = 11.969 BETA ( 1) = -3.832 MACH = 1.0972 Q = 598.33 P = 710.00 RN/L = 3.1878

SECTION ( 1)BODY FLAP UPPER DEPENDENT VARIABLE CP

| X/LB | 1.0180 | 1.0460 |
|---|---|---|
| PHI | | |
| .000 | -.4856 | -.4771 |
| 40.000 | -.4803 | -.5222 |

ALPHA ( 5) = 11.872 BETA ( 2) = .197 MACH = 1.0972 Q = 598.33 P = 710.00 RN/L = 3.1878

SECTION ( 1)BODY FLAP UPPER DEPENDENT VARIABLE CP

| X/LB | 1.0180 | 1.0460 |
|---|---|---|
| PHI | | |
| .000 | -.4424 | -.4443 |
| 40.000 | -.4528 | -.4934 |

AMES 11-073(OA148) -140A/B/C/R CRB BODY FLAP UP (XEBF59)

ALPHA ( 5) = 11.865 BETA ( 3) = 4.258 MACH = 1.0972 Q = 598.33 P = 710.00 RN/L = 3.1878

SECTION ( 1)BODY FLAP UPPER DEPENDENT VARIABLE CP

| X/LB | 1.0180 | 1.0460 |
|---|---|---|
| PHI | | |
| .000 | -.4564 | -.4595 |
| 40.000 | -.4713 | -.5012 |

AMES 11-073(OA148) -140A/B/C/R ORB BODY FLAP UP (XE8F60) ( 05 AUG 75 )

REFERENCE DATA

SREF = 2690.0000 SQ.FT. XMRP = 1076.6800 IN. XO
LREF = 474.9000 IN. YMRP = .0000 IN. YO
BREF = 935.0000 IN. ZMRP = 375.0000 IN. ZO
SCALE = .0300

PARAMETRIC DATA

RUDDER = 10.000 SPDBRK = 55.000
BDFLAP = 16.300 L-ELVN = 4.000
R-ELVN = -4.000 MACH = .900

ALPHA ( 1) = -4.026 BETA ( 1) = -3.841 MACH = .89803 Q = 598.77 P = 1060.7 RN/L = 3.5631

SECTION ( 1)BODY FLAP UPPER DEPENDENT VARIABLE CP

| X/LB | 1.0180 | 1.0460 |
|---|---|---|
| PHI | | |
| .000 | -.3051 | -.2958 |
| 40.000 | -.3126 | -.3446 |

ALPHA ( 1) = -4.026 BETA ( 2) = .202 MACH = .89803 Q = 598.77 P = 1060.7 RN/L = 3.5631

SECTION ( 1)BODY FLAP UPPER DEPENDENT VARIABLE CP

| X/LB | 1.0180 | 1.0460 |
|---|---|---|
| PHI | | |
| .000 | -.3123 | -.3286 |
| 40.000 | -.3045 | -.3403 |

ALPHA ( 1) = -3.994 BETA ( 3) = 4.285 MACH = .89803 Q = 598.77 P = 1060.7 RN/L = 3.5631

SECTION ( 1)BODY FLAP UPPER DEPENDENT VARIABLE CP

| X/LB | 1.0180 | 1.0460 |
|---|---|---|
| PHI | | |
| .000 | -.3079 | -.3160 |
| 40.000 | -.3024 | -.3408 |

ALPHA ( 2) = .056 BETA ( 1) = -3.856 MACH = .89813 Q = 598.75 P = 1060.5 RN/L = 3.5631

SECTION ( 1)BODY FLAP UPPER DEPENDENT VARIABLE CP

| X/LB | 1.0180 | 1.0460 |
|---|---|---|
| PHI | | |
| .000 | -.3009 | -.2951 |
| 40.000 | -.3179 | -.3415 |

AMES 11-073(OA148) -140A/B/C/R ORB BODY FLAP UP (XE8F60)

ALPHA ( 2) = .056 BETA ( 2) = .186 MACH = .89813 Q = 598.75 P = 1060.5 RN/L = 3.5631

SECTION ( 1)BODY FLAP UPPER DEPENDENT VARIABLE CP

| X/LB | 1.0180 | 1.0460 |
|---|---|---|
| PHI | | |
| .000 | -.3062 | -.3010 |
| 40.000 | -.3074 | -.3247 |

ALPHA ( 2) = .048 BETA ( 3) = 4.260 MACH = .89813 Q = 598.75 P = 1060.5 RN/L = 3.5631

SECTION ( 1)BODY FLAP UPPER DEPENDENT VARIABLE CP

| X/LB | 1.0180 | 1.0460 |
|---|---|---|
| PHI | | |
| .000 | -.2935 | -.3056 |
| 40.000 | -.3157 | -.3392 |

ALPHA ( 3) = 3.975 BETA ( 1) = -3.861 MACH = .89723 Q = 597.99 P = 1061.2 RN/L = 3.5607

SECTION ( 1)BODY FLAP UPPER DEPENDENT VARIABLE CP

| X/LB | 1.0180 | 1.0460 |
|---|---|---|
| PHI | | |
| .000 | -.2939 | -.2967 |
| 40.000 | -.3124 | -.3311 |

ALPHA ( 3) = 4.019 BETA ( 2) = .193 MACH = .89723 Q = 597.99 P = 1061.2 RN/L = 3.5607

SECTION ( 1)BODY FLAP UPPER DEPENDENT VARIABLE CP

| X/LB | 1.0180 | 1.0460 |
|---|---|---|
| PHI | | |
| .000 | -.2862 | -.2902 |
| 40.000 | -.2926 | -.3231 |

ALPHA ( 3) = 3.944 BETA ( 3) = 4.252 MACH = .89723 Q = 597.99 P = 1061.2 RN/L = 3.5607

SECTION ( 1)BODY FLAP UPPER DEPENDENT VARIABLE CP

| X/LB | 1.0180 | 1.0460 |
|---|---|---|
| PHI | | |
| .000 | -.2849 | -.2923 |
| 40.000 | -.3126 | -.3403 |

AMES 11-073(OA148) -140A/B/C/R ORB BODY FLAP UP (XE8F6D)

ALPHA ( 4) = 8.020 BETA ( 1) = -3.857 MACH = .89903 Q = 599.30 P = 1059.3 RN/L = 3.5654

SECTION ( 1)BODY FLAP UPPER DEPENDENT VARIABLE CP

| X/LB | 1.0180 | 1.0460 |
|---|---|---|
| PHI | | |
| .000 | -.2944 | -.2944 |
| 40.000 | -.3050 | -.3197 |

ALPHA ( 4) = 8.028 BETA ( 2) = .194 MACH = .89903 Q = 599.30 P = 1059.3 RN/L = 3.5654

SECTION ( 1)BODY FLAP UPPER DEPENDENT VARIABLE CP

| X/LB | 1.0180 | 1.0460 |
|---|---|---|
| PHI | | |
| .000 | -.2844 | -.2946 |
| 40.000 | -.2975 | -.3198 |

ALPHA ( 4) = 8.024 BETA ( 3) = 4.248 MACH = .89903 Q = 599.30 P = 1059.3 RN/L = 3.5654

SECTION ( 1)BODY FLAP UPPER DEPENDENT VARIABLE CP

| X/LB | 1.0180 | 1.0460 |
|---|---|---|
| PHI | | |
| .000 | -.2878 | -.2937 |
| 40.000 | -.3100 | -.3273 |

ALPHA ( 5) = 11.919 BETA ( 1) = -3.839 MACH = .89963 Q = 599.94 P = 1059.0 RN/L = 3.5645

SECTION ( 1)BODY FLAP UPPER DEPENDENT VARIABLE CP

| X/LB | 1.0180 | 1.0460 |
|---|---|---|
| PHI | | |
| .000 | -.2975 | -.3052 |
| 40.000 | -.3155 | -.3261 |

ALPHA ( 5) = 11.929 BETA ( 2) = .180 MACH = .89963 Q = 599.94 P = 1059.0 RN/L = 3.5645

SECTION ( 1)BODY FLAP UPPER DEPENDENT VARIABLE CP

| X/LB | 1.0180 | 1.0460 |
|---|---|---|
| PHI | | |
| .000 | -.2847 | -.2899 |
| 40.000 | -.2997 | -.3193 |

AMES 11-073(OA148) -140A/B/C/R ORB BODY FLAP UP (XEBF60)

ALPHA ( 5) = 11.915 BETA ( 3) = 4.258 MACH = .89963 Q = 599.94 P = 1059.0 RN/L = 3.5645

SECTION ( 1)BODY FLAP UPPER DEPENDENT VARIABLE CP

| X/LB | 1.0180 | 1.0450 |
|---|---|---|
| PHI | | |
| .000 | -.3186 | -.3345 |
| 90.000 | -.3248 | -.3365 |

AMES 11-073(OA148) -140A/B/C/R ORB BODY FLAP UP (XE9F61) ( 05 AUG 75 )

REFERENCE DATA

SREF = 2690.0000 SQ.FT. XMRP = 1076.6800 IN. XO
LREF = 474.8000 IN. YMRP = .0000 IN. YO
BREF = 936.0680 IN. ZMRP = 375.0000 IN. ZO
SCALE = .0300

PARAMETRIC DATA

RUDDER = 10.000 SPDBRK = 55.000
BDFLAP = 16.300 L-ELVN = 4.000
R-ELVN = -4.000 MACH = .600

ALPHA ( 1) = -4.014 BETA ( 1) = -7.854 MACH = .59638 Q = 594.21 P = 2386.5 RN/L = 4.8411

SECTION ( 1)BODY FLAP UPPER DEPENDENT VARIABLE CP

| X/LB | 1.0180 | 1.0460 |
|---|---|---|
| PHI | | |
| .000 | -.2522 | -.2451 |
| 40.000 | -.2874 | -.3224 |

ALPHA ( 1) = -3.998 BETA ( 2) = -3.832 MACH = .59638 Q = 594.21 P = 2386.5 RN/L = 4.8411

SECTION ( 1)BODY FLAP UPPER DEPENDENT VARIABLE CP

| X/LB | 1.0180 | 1.0460 |
|---|---|---|
| PHI | | |
| .000 | -.2521 | -.2552 |
| 40.000 | -.2864 | -.3233 |

ALPHA ( 1) = -3.980 BETA ( 3) = .201 MACH = .59638 Q = 594.21 P = 2386.5 RN/L = 4.8411

SECTION ( 1)BODY FLAP UPPER DEPENDENT VARIABLE CP

| X/LB | 1.0180 | 1.0460 |
|---|---|---|
| PHI | | |
| .000 | -.2541 | -.2498 |
| 40.000 | -.2822 | -.3148 |

ALPHA ( 1) = -3.988 BETA ( 4) = 4.282 MACH = .59638 Q = 594.21 P = 2386.5 RN/L = 4.8411

SECTION ( 1)BODY FLAP UPPER DEPENDENT VARIABLE CP

| X/LB | 1.0180 | 1.0460 |
|---|---|---|
| PHI | | |
| .000 | -.2363 | -.2426 |
| 40.000 | -.2821 | -.3 21 |

ORIGINAL PAGE IS OF POOR QUALITY

AMES 11-073(OA148) -140A/B/C/R ORB BODY FLAP UP (XE8F61)

ALPHA ( 1) = -4.005 BETA ( 5) = 8.352 MACH = .59638 Q = 594.21 P = 2386.5 RN/L = 4.8411

SECTION ( 1)BODY FLAP UPPER DEPENDENT VARIABLE CP

| X/LB | 1.0180 | 1.0460 |
|---|---|---|
| PHI | | |
| .000 | -.2437 | -.2510 |
| 40.000 | -.2810 | -.3109 |

ALPHA ( 2) = .015 BETA ( 1) = -7.895 MACH = .59624 Q = 593.85 P = 2386.1 RN/L = 4.8452

SECTION ( 1)BODY FLAP UPPER DEPENDENT VARIABLE CP

| X/LB | 1.0180 | 1.0460 |
|---|---|---|
| PHI | | |
| .000 | -.2512 | -.2579 |
| 40.000 | -.2925 | -.3192 |

ALPHA ( 2) = .022 BETA ( 2) = -3.851 MACH = .59624 Q = 593.85 P = 2386.1 RN/L = 4.8452

SECTION ( 1)BODY FLAP UPPER DEPENDENT VARIABLE CP

| X/LB | 1.0180 | 1.0460 |
|---|---|---|
| PHI | | |
| .000 | -.2541 | -.2484 |
| 40.000 | -.2808 | -.3113 |

ALPHA ( 2) = .105 BETA ( 3) = .189 MACH = .59624 Q = 593.85 P = 2386.1 RN/L = 4.8452

SECTION ( 1)BODY FLAP UPPER DEPENDENT VARIABLE CP

| X/LB | 1.0180 | 1.0460 |
|---|---|---|
| PHI | | |
| .000 | -.2472 | -.2483 |
| 40.000 | -.2741 | -.3098 |

ALPHA ( 2) = .100 BETA ( 4) = 4.264 MACH = .59624 Q = 593.85 P = 2386.1 RN/L = 4.8452

SECTION ( 1)BODY FLAP UPPER DEPENDENT VARIABLE CP

| X/LB | 1.0180 | 1.0460 |
|---|---|---|
| PHI | | |
| .000 | -.2478 | -.2419 |
| 40.000 | -.2864 | -.3126 |

AMES 11-073(OA148) -140A/B/C/R ORB BODY FLAP UP (XE6F61)

ALPHA ( 2) = .094 BETA ( 5) = 8.317 MACH = .59624 Q = 593.85 P = 2386.1 RN/L = 4.8452

SECTION : 1)BODY FLAP UPPER DEPENDENT VARIABLE CP

| X/LB | 1.0180 | 1.0460 |
|---|---|---|
| PHI | | |
| .000 | -.2489 | -.2548 |
| 40.000 | -.2854 | -.3197 |

ALPHA ( 3) = 4.024 BETA ( 1) = -7.901 MACH = .59706 Q = 595.26 P = 2385.4 RN/L = 4.8521

SECTION : 1)BODY FLAP UPPER DEPENDENT VARIABLE CP

| X/LB | 1.0180 | 1.0460 |
|---|---|---|
| PHI | | |
| .000 | -.2514 | -.2724 |
| 40.000 | -.2882 | -.3092 |

ALPHA ( 3) = 4.025 BETA ( 2) = -3.849 MACH = .59706 Q = 595.26 P = 2385.4 RN/L = 4.8521

SECTION : 1)BODY FLAP UPPER DEPENDENT VARIABLE CP

| X/LB | 1.0180 | 1.0460 |
|---|---|---|
| PHI | | |
| .000 | -.2519 | -.2640 |
| 40.000 | -.2873 | -.3039 |

ALPHA ( 3) = 4.034 BETA ( 3) = .195 MACH = .59706 Q = 595.26 P = 2385.4 RN/L = 4.8521

SECTION : 1)BODY FLAP UPPER DEPENDENT VARIABLE CP

| X/LB | 1.0180 | 1.0460 |
|---|---|---|
| PHI | | |
| .000 | -.2560 | -.2626 |
| 40.000 | -.2751 | -.2969 |

ALPHA ( 3) = 4.044 BETA ( 4) = 4.254 MACH = .59706 Q = 595.26 P = 2385.4 RN/L = 4.8521

SECTION : 1)BODY FLAP UPPER DEPENDENT VARIABLE CP

| X/LB | 1.0180 | 1.0460 |
|---|---|---|
| PHI | | |
| .000 | -.2465 | -.2568 |
| 40.000 | -.2809 | -.3166 |

AMES 11-073(OA148) -140A/B/C/R CRB BODY FLAP UP (XEBF61)

ALPHA ( 3) = 4.047 BETA ( 5) = 8.299 MACH = .59706 Q = 595.26 P = 2385.4 RN/L = 4.852

SECTION ( 1)BODY FLAP UPPER DEPENDENT VARIABLE CP

| X/LB | 1.0180 | 1.0460 |
|---|---|---|
| PHI | | |
| .000 | -.2606 | -.2548 |
| 40.000 | -.2877 | -.3210 |

ALPHA ( 4) = 8.028 BETA ( 1) = -7.897 MACH = .59720 Q = 595.49 P = 2385.3 RN/L = 4.853

SECTION ( 1)BODY FLAP UPPER DEPENDENT VARIABLE CP

| X/LB | 1.0180 | 1.0460 |
|---|---|---|
| PHI | | |
| .000 | -.2675 | -.2959 |
| 40.000 | -.3031 | -.3123 |

ALPHA ( 4) = 8.037 BETA ( 2) = -3.847 MACH = .59720 Q = 595.49 P = 2385.3 RN/L = 4.853

SECTION ( 1)BODY FLAP UPPER DEPENDENT VARIABLE CP

| X/LB | 1.0180 | 1.0460 |
|---|---|---|
| PHI | | |
| .000 | -.2534 | -.2595 |
| 40.000 | -.2786 | -.3014 |

ALPHA ( 4) = 8.042 BETA ( 3) = .196 MACH = .59720 Q = 595.49 P = 2385.3 RN/L = 4.853

SECTION ( 1)BODY FLAP UPPER DEPENDENT VARIABLE CP

| X/LB | 1.0180 | 1.0460 |
|---|---|---|
| PHI | | |
| .000 | -.2450 | -.2502 |
| 40.000 | -.2636 | -.2783 |

ALPHA ( 4) = 7.960 BETA ( 4) = 4.251 MACH = .59720 Q = 595.49 P = 2385.3 RN/L = 4.8534

SECTION ( 1)BODY FLAP UPPER DEPENDENT VARIABLE CP

| X/LB | 1.0180 | 1.0460 |
|---|---|---|
| PHI | | |
| .000 | -.2561 | -.2542 |
| 40.000 | -.2747 | -.3061 |

AMES 11-073(OA148) -140A/B/C/R ORB BODY FLAP UP (XE8F61)

ALPHA ( 4) = 7.955 BETA ( 5) = 8.305 MACH = .59720 Q = 595.49 P = 2385.3 RN/L = 4.8534

SECTION ( 1)BODY FLAP UPPER DEPENDENT VARIABLE CP

| X/LB | 1.0180 | 1.0460 |
|---|---|---|
| PHI | | |
| .000 | -.2563 | -.2682 |
| 40.000 | -.2743 | -.3215 |

ALPHA ( 5) = 11.943 BETA ( 1) = -7.853 MACH = .59660 Q = 594.44 P = 2386.0 RN/L = 4.8439

SECTION ( 1)BODY FLAP UPPER DEPENDENT VARIABLE CP

| X/LB | 1.0180 | 1.0460 |
|---|---|---|
| PHI | | |
| .000 | -.2574 | -.2774 |
| 40.000 | -.2884 | -.3027 |

ALPHA ( 5) = 11.962 BETA ( 2) = -3.827 MACH = .59660 Q = 594.44 P = 2386.0 RN/L = 4.8439

SECTION ( 1)BODY FLAP UPPER DEPENDENT VARIABLE CP

| X/LB | 1.0180 | 1.0460 |
|---|---|---|
| PHI | | |
| .000 | -.2572 | -.2610 |
| 40.000 | -.2713 | -.2919 |

ALPHA ( 5) = 11.967 BETA ( 3) = .197 MACH = .59660 Q = 594.44 P = 2386.0 RN/L = 4.8439

SECTION ( 1)BODY FLAP UPPER DEPENDENT VARIABLE CP

| X/LB | 1.0180 | 1.0460 |
|---|---|---|
| PHI | | |
| .000 | -.2479 | -.2581 |
| 40.000 | -.2666 | -.2798 |

ALPHA ( 5) = 11.963 BETA ( 4) = 4.259 MACH = .59660 Q = 594.44 P = 2386.0 RN/L = 4.8439

SECTION ( 1)BODY FLAP UPPER DEPENDENT VARIABLE CP

| X/LB | 1.0180 | 1.0460 |
|---|---|---|
| PHI | | |
| .000 | -.2561 | -.2642 |
| 40.000 | -.2729 | -.2971 |

AMES 11-073(OA148) -140A/B/C/R ORB BODY FLAP UP (XE8F61)

ALPHA ( 5) = 11.951 BETA ( 5) = 8.316 MACH = .59660 Q = 594.44 P = 2386.0 RN/L = 4.8439

SECTION : 1:BODY FLAP UPPER DEPENDENT VARIABLE CP

| X/LB | 1.0180 | 1.0460 |
|---|---|---|
| PHI | | |
| .000 | -.2531 | -.2668 |
| 40.000 | -.2718 | -.3253 |

AMES 11-073(OA148) -140A/B/C/R ORB BODY FLAP UP (XE8F62) ( 05 AUG 75 )

REFERENCE DATA

SREF = 2450.0000 SQ.FT. XMRP = 1076.6300 IN. XO
LREF = 474.8000 IN. YMRP = .0000 IN. YO
BREF = 935.0680 IN. ZMRP = 375.0000 IN. ZO
SCALE = 0300

PARAMETRIC DATA

RUDDER = 5.000 SPDBRK = 55.000
BDFLAP = 16.300 L-ELVN = -4.000
R-ELVN = -4.000 MACH = 1.400

ALPHA ( 1) = -4.059 BETA ( 1) = -3.849 MACH = 1.3925 Q = 599.99 P = 442.06 RN/L = 2.9210

SECTION ( 1)BODY FLAP UPPER DEPENDENT VARIABLE CP

| X/LB | 1.0180 | 1.0460 |
|---|---|---|
| PHI | | |
| .000 | -.3344 | -.3226 |
| 40.000 | -.3628 | -.3732 |

ALPHA ( 1) = -3.922 BETA ( 2) = .195 MACH = 1.3925 Q = 599.99 P = 442.06 RN/L = 2.9210

SECTION ( 1)BODY FLAP UPPER DEPENDENT VARIABLE CP

| X/LB | 1.0180 | 1.0460 |
|---|---|---|
| PHI | | |
| .000 | -.3301 | -.3123 |
| 40.000 | -.3595 | -.3704 |

ALPHA ( 1) = -3.930 BETA ( 3) = 4.280 MACH = 1.3925 Q = 599.99 P = 442.06 RN/L = 2.9210

SECTION ( 1)BODY FLAP UPPER DEPENDENT VARIABLE CP

| X/LB | 1.0180 | 1.0460 |
|---|---|---|
| PHI | | |
| .000 | -.3350 | -.3255 |
| 40.000 | -.3501 | -.3693 |

ALPHA ( 2) = .024 BETA ( 1) = -3.867 MACH = 1.3922 Q = 599.78 P = 442.06 RN/L = 2.9172

SECTION ( 1)BODY FLAP UPPER DEPENDENT VARIABLE CP

| X/LB | 1.0180 | 1.0460 |
|---|---|---|
| PHI | | |
| .000 | -.3338 | -.3260 |
| 40.000 | -.3658 | -.3769 |

ORIGINAL PAGE IS OF POOR QUALITY

AMES 11-073(OA148) -140A/B/C/R ORB BODY FLAP UP (XE8F62)

ALPHA ( 2) = .029 BETA ( 2) = .185 MACH = 1.3922 Q = 599.78 P = 442.06 RN/L = 2.9172

SECTION ( 1)BODY FLAP UPPER DEPENDENT VARIABLE CP

| X/LB | 1.0180 | 1.0460 |
|---|---|---|
| PHI | | |
| .000 | -.3392 | -.3287 |
| 40.000 | -.3665 | -.3772 |

ALPHA ( 2) = .025 BETA ( 3) = 4.257 MACH = 1.3922 Q = 599.78 P = 442.06 RN/L = 2.9172

SECTION ( 1)BODY FLAP UPPER DEPENDENT VARIABLE CP

| X/LB | 1.0180 | 1.0460 |
|---|---|---|
| PHI | | |
| .000 | -.3477 | -.3413 |
| 40.000 | -.3616 | -.3742 |

ALPHA ( 3) = 3.958 BETA ( 1) = -3.867 MACH = 1.3919 Q = 599.88 P = 442.29 RN/L = 2.9189

SECTION ( 1)BODY FLAP UPPER DEPENDENT VARIABLE CP

| X/LB | 1.0180 | 1.0460 |
|---|---|---|
| PHI | | |
| .000 | -.3336 | -.3265 |
| 40.000 | -.3613 | -.3705 |

ALPHA ( 3) = 3.958 BETA ( 2) = .187 MACH = 1.3919 Q = 599.88 P = 442.29 RN/L = 2.9189

SECTION ( 1)BODY FLAP UPPER DEPENDENT VARIABLE CP

| X/LB | 1.0180 | 1.0460 |
|---|---|---|
| PHI | | |
| .000 | -.3369 | -.3324 |
| 40.000 | -.3588 | -.3695 |

ALPHA ( 3) = 3.963 BETA ( 3) = 4.246 MACH = 1.3919 Q = 599.88 P = 442.29 RN/L = 2.9189

SECTION ( 1)BODY FLAP UPPER DEPENDENT VARIABLE CP

| X/LB | 1.0180 | 1.0460 |
|---|---|---|
| PHI | | |
| .000 | -.3469 | -.3467 |
| 40.000 | -.3531 | -.3671 |

AMES 11-073(OA148) -140A/B/C/R CRB BODY FLAP UP (XE8F62)

ALPHA ( 4) = 7.927 BETA ( 1) = -3.866 MACH = 1.3932 Q = 600.00 P = 441.59 RN/L = 2.9182

SECTION ( 1)BODY FLAP UPPER DEPENDENT VARIABLE CP

| X/LB | 1.0180 | 1.0460 |
|---|---|---|
| PHI | | |
| .000 | -.3444 | -.3368 |
| 40.000 | -.3692 | -.3808 |

ALPHA ( 4) = 7.932 BETA ( 2) = .179 MACH = 1.3932 Q = 600.00 P = 441.59 RN/L = 2.9182

SECTION ( 1)BODY FLAP UPPER DEPENDENT VARIABLE CP

| X/LB | 1.0180 | 1.0460 |
|---|---|---|
| PHI | | |
| .000 | -.3428 | -.3355 |
| 40.000 | -.3582 | -.3719 |

ALPHA ( 4) = 7.933 BETA ( 3) = 4.245 MACH = 1.3932 Q = 600.00 P = 441.59 RN/L = 2.9182

SECTION ( 1)BODY FLAP UPPER DEPENDENT VARIABLE CP

| X/LB | 1.0180 | 1.0460 |
|---|---|---|
| PHI | | |
| .000 | -.3487 | -.3413 |
| 40.000 | -.3505 | -.3816 |

ALPHA ( 5) = 11.912 BETA ( 1) = -3.854 MACH = 1.3916 Q = 599.87 P = 442.53 RN/L = 2.9199

SECTION ( 1)BODY FLAP UPPER DEPENDENT VARIABLE CP

| X/LB | 1.0180 | 1.0460 |
|---|---|---|
| PHI | | |
| .000 | -.3600 | -.3626 |
| 40.000 | -.3524 | -.3645 |

ALPHA ( 5) = 11.921 BETA ( 2) = .184 MACH = 1.3916 Q = 599.87 P = 442.53 RN/L = 2.9199

SECTION ( 1)BODY FLAP UPPER DEPENDENT VARIABLE CP

| X/LB | 1.0180 | 1.0460 |
|---|---|---|
| PHI | | |
| .000 | -.3430 | -.3430 |
| 40.000 | -.3572 | -.3785 |

AMES 11-073(OA148) -140A/B/C/R ORB BODY FLAP UP (XE8F62)

ALPHA ( 5) = 11.919 BETA ( 3) = 4.258 MACH = 1.3916 Q = 599.87 P = 442.53 RN/L = 2.9199

SECTION ( 1)BODY FLAP UPPER DEPENDENT VARIABLE CP

| X/LB | 1.0180 | 1.0460 |
|---|---|---|
| PHI | | |
| .000 | -.3578 | -.3540 |
| 40.000 | -.3837 | -.4071 |

ALPHA ( 6) = 15.912 BETA ( 1) = -3.830 MACH = 1.3897 Q = 599.83 P = 443.71 RN/L = 2.9243

SECTION ( 1)BODY FLAP UPPER DEPENDENT VARIABLE CP

| X/LB | 1.0180 | 1.0460 |
|---|---|---|
| PHI | | |
| .000 | -.3786 | -.3605 |
| 40.000 | -.3732 | -.3703 |

ALPHA ( 6) = 15.924 BETA ( 2) = .184 MACH = 1.3897 Q = 599.83 P = 443.71 RN/L = 2.9243

SECTION ( 1)BODY FLAP UPPER DEPENDENT VARIABLE CP

| X/LB | 1.0180 | 1.0460 |
|---|---|---|
| PHI | | |
| .000 | -.3811 | -.3515 |
| 40.000 | -.3983 | -.4133 |

ALPHA ( 6) = 15.916 BETA ( 3) = 4.288 MACH = 1.3897 Q = 599.83 P = 443.71 RN/L = 2.9243

SECTION ( 1)BODY FLAP UPPER DEPENDENT VARIABLE CP

| X/LB | 1.0180 | 1.0460 |
|---|---|---|
| PHI | | |
| .000 | -.3740 | -.3493 |
| 40.000 | -.4019 | -.4213 |

AMES 11-073(OA148) -140A/B/C/R ORB BODY FLAP UP (XE8F63) ( 05 AUG 75 )

REFERENCE DATA

SREF = 2690.0000 SQ.FT. XMRP = 1076.6800 IN. XO
LREF = 474.8000 IN. YMRP = .0000 IN. YO
BREF = 936.0890 IN. ZMRP = 375.0000 IN. ZO
SCALE = .0300

PARAMETRIC DATA

RUDDER = 5.000 SPDBRK = 55.000
BDFLAP = 16.300 L-ELVN = -4.000
R-ELVN = -4.000 MACH = 1.250

ALPHA ( 1) = -4.050 BETA ( 1) = -3.840 MACH = 1.2459 Q = 600.11 P = 552.28 RN/L = 3.0241

SECTION ( 1)BODY FLAP UPPER DEPENDENT VARIABLE CP

| X/LB | 1.0180 | 1.0460 |
|---|---|---|
| PHI | | |
| .000 | -.3510 | -.3506 |
| 40.000 | -.3980 | -.4098 |

ALPHA ( 1) = -3.916 BETA ( 2) = .196 MACH = 1.2459 Q = 600.11 P = 552.28 RN/L = 3.0241

SECTION ( 1)BODY FLAP UPPER DEPENDENT VARIABLE CP

| X/LB | 1.0180 | 1.0460 |
|---|---|---|
| PHI | | |
| .000 | -.3559 | -.3450 |
| 40.000 | -.3914 | -.4023 |

ALPHA ( 1) = -3.923 BETA ( 3) = 4.275 MACH = 1.2459 Q = 600.11 P = 552.28 RN/L = 3.0241

SECTION ( 1)BODY FLAP UPPER DEPENDENT VARIABLE CP

| X/LB | 1.0180 | 1.0460 |
|---|---|---|
| PHI | | |
| .000 | -.3665 | -.3668 |
| 40.000 | -.3784 | -.3912 |

ALPHA ( 2) = .044 BETA ( 1) = -3.864 MACH = 1.2451 Q = 599.58 P = 552.51 RN/L = 3.0238

SECTION ( 1)BODY FLAP UPPER DEPENDENT VARIABLE CP

| X/LB | 1.0180 | 1.0460 |
|---|---|---|
| PHI | | |
| .000 | -.3695 | -.3653 |
| 40.000 | -.4015 | -.4155 |

AMES 11-073(OA148) -140A/B/C/R ORB BODY FLAP UP (XE8F63)

ALPHA ( 2) = .050 BETA ( 2) = .180 MACH = 1.2451 Q = 599.58 P = 552.51 RN/L = 3.0238

SECTION ( 1)BODY FLAP UPPER DEPENDENT VARIABLE CP

| X/LB | 1.0180 | 1.0460 |
|---|---|---|
| PHI | | |
| .000 | -.3674 | -.3600 |
| 40.000 | -.3942 | -.4079 |

ALPHA ( 2) = .046 BETA ( 3) = 4.256 MACH = 1.2451 Q = 599.58 P = 552.51 RN/L = 3.0238

SECTION ( 1)BODY FLAP UPPER DEPENDENT VARIABLE CP

| X/LB | 1.0180 | 1.0460 |
|---|---|---|
| PHI | | |
| .000 | -.3857 | -.3970 |
| 40.000 | -.3813 | -.3993 |

ALPHA ( 3) = 3.990 BETA ( 1) = -3.864 MACH = 1.2448 Q = 599.34 P = 552.51 RN/L = 3.0213

SECTION ( 1)BODY FLAP UPPER DEPENDENT VARIABLE CP

| X/LB | 1.0180 | 1.0460 |
|---|---|---|
| PHI | | |
| .000 | -.3715 | -.3584 |
| 40.000 | -.3954 | -.4068 |

ALPHA ( 3) = 3.991 BETA ( 2) = .185 MACH = 1.2448 Q = 599.34 P = 532.51 RN/L = 3.0213

SECTION ( 1)BODY FLAP UPPER DEPENDENT VARIABLE CP

| X/LB | 1.0180 | 1.0460 |
|---|---|---|
| PHI | | |
| .000 | -.3788 | -.3705 |
| 40.000 | -.3992 | -.4099 |

ALPHA ( 3) = 3.994 BETA ( 3) = 4.245 MACH = 1.2448 Q = 599.34 P = 552.51 RN/L = 3.0213

SECTION ( 1)BODY FLAP UPPER DEPENDENT VARIABLE CP

| X/LB | 1.0180 | 1.0460 |
|---|---|---|
| PHI | | |
| .000 | -.3928 | -.3945 |
| 40.000 | -.3847 | -.3940 |

AMES 11-073(OA148) -140A/B/C/R ORB BODY FLAP UP (XEBF53)

ALPHA ( 4) = 7.968 BETA ( 1) = -3.863 MACH = 1.2457 Q = 599.38 P = 551.80 RN/L = 3.0207

SECTION ( 1)BODY FLAP UPPER DEPENDENT VARIABLE CP

| X/LB | 1.0180 | 1.0460 |
|---|---|---|
| PHI | | |
| .000 | -.3849 | -.3773 |
| 40.000 | -.4127 | -.4236 |

ALPHA ( 4) = 7.973 BETA ( 2) = .179 MACH = 1.2457 Q = 599.38 P = 551.80 RN/L = 3.0207

SECTION ( 1)BODY FLAP UPPER DEPENDENT VARIABLE CP

| X/LB | 1.0180 | 1.0460 |
|---|---|---|
| PHI | | |
| .000 | -.3900 | -.3820 |
| 40.000 | -.4126 | -.4226 |

ALPHA ( 4) = 7.897 BETA ( 3) = 4.244 MACH = 1.2457 Q = 599.38 P = 551.80 RN/L = 3.0207

SECTION ( 1)BODY FLAP UPPER DEPENDENT VARIABLE CP

| X/LB | 1.0180 | 1.0460 |
|---|---|---|
| PHI | | |
| .000 | -.4042 | -.4046 |
| 40.000 | -.4099 | -.4231 |

ALPHA ( 5) = 11.969 BETA ( 1) = -3.850 MACH = 1.2456 Q = 599.56 P = 552.04 RN/L = 3.0223

SECTION ( 1)BODY FLAP UPPER DEPENDENT VARIABLE CP

| X/LB | 1.0180 | 1.0460 |
|---|---|---|
| PHI | | |
| .000 | -.3935 | -.3955 |
| 40.000 | -.4130 | -.4271 |

ALPHA ( 5) = 11.877 BETA ( 2) = .185 MACH = 1.2456 Q = 599.56 P = 552.04 RN/L = 3.0223

SECTION ( 1)BODY FLAP UPPER DEPENDENT VARIABLE CP

| X/LB | 1.0180 | 1.0460 |
|---|---|---|
| PHI | | |
| .000 | -.3875 | -.3868 |
| 40.000 | -.4146 | -.4329 |

AMES 11-073(OA148) -140A/B/C R ORB BODY FLAP UP (XE8F63)

ALPHA ( 5) = 11.890 BETA ( 3) = 4.256 MACH = 1.2456 Q = 599.56 P = 552.04 RN/L = 3.0223

SECTION ( 1)BODY FLAP UPPER DEPENDENT VARIABLE CP

| X/LB | 1.0180 | 1.0460 |
|---|---|---|
| PHI | | |
| .000 | -.4007 | -.3995 |
| 40.000 | -.4288 | -.4485 |

AMES 11-073(OA148) -140A/B/C/R ORB BODY FLAP UP (XE8F64) ( 05 AUG 75 )

REFERENCE DATA

SREF = 2690.0000 SQ.FT. XMRP = 1076.6800 IN. XO
LREF = 474.8000 IN. YMRP = .0000 IN. YO
BREF = 936.0680 IN. ZMRP = 375.0000 IN. ZO
SCALE = .0300

PARAMETRIC DATA

RUDDER = 5.000 SPDBRK = 55.000
BDFLAP = 16.300 L-ELVN = -4.000
R-ELVN = -4.000 MACH = 1.100

ALPHA ( 1) = -3.951 BETA ( 1) = -3.840 MACH = 1.0981 Q = 598.93 P = 709.54 RN/L = 3.1905

SECTION ( 1)BODY FLAP UPPER DEPENDENT VARIABLE CP

| X/LB | 1.0180 | 1.0450 |
|---|---|---|
| PHI | | |
| .000 | -.4018 | -.4054 |
| 40.000 | -.4234 | -.4345 |

ALPHA ( 1) = -3.948 BETA ( 2) = .196 MACH = 1.0981 Q = 598.93 P = 709.54 RN/L = 3.1905

SECTION ( 1)BODY FLAP UPPER DEPENDENT VARIABLE CP

| X/LB | 1.0180 | 1.0460 |
|---|---|---|
| PHI | | |
| .000 | -.3879 | -.3931 |
| 40.000 | -.4025 | -.4208 |

ALPHA ( 1) = -3.942 BETA ( 3) = 4.273 MACH = 1.0981 Q = 598.93 P = 709.54 RN/L = 3.1905

SECTION ( 1)BODY FLAP UPPER DEPENDENT VARIABLE CP

| X/LB | 1.0180 | 1.0460 |
|---|---|---|
| PHI | | |
| .000 | -.4141 | -.4222 |
| 40.000 | -.3973 | -.4073 |

ALPHA ( 2) = .059 BETA ( 1) = -3.863 MACH = 1.0998 Q = 599.80 P = 708.37 RN/L = 3.1909

SECTION ( 1)BODY FLAP UPPER DEPENDENT VARIABLE CP

| X/LB | 1.0180 | 1.0450 |
|---|---|---|
| PHI | | |
| .000 | -.4046 | -.4063 |
| 40.000 | -.4260 | -.4312 |

AMES 11-073(OA148) -140A/B/C/R ORB BODY FLAP UP (XEBF64)

ALPHA ( 2) = .062 BETA ( 2) = .193 MACH = 1.0998 Q = 599.80 P = 708.37 RN/L = 3.1909

SECTION ( 1)BODY FLAP UPPER DEPENDENT VARIABLE CP

| X/LB | 1.0180 | 1.0460 |
|---|---|---|
| PHI | | |
| .000 | -.3937 | -.3961 |
| 40.000 | -.4070 | -.4283 |

ALPHA ( 2) = .059 BETA ( 3) = 4.253 MACH = 1.0998 Q = 599.80 P = 708.37 RN/L = 3.1909

SECTION ( 1)BODY FLAP UPPER DEPENDENT VARIABLE CP

| X/LB | 1.0180 | 1.0460 |
|---|---|---|
| PHI | | |
| .000 | -.4209 | -.4297 |
| 40.000 | -.3281 | -.3957 |

ALPHA ( 3) = 4.021 BETA ( 1) = -3.865 MACH = 1.0995 Q = 600.25 P = 709.31 RN/L = 3.1949

SECTION ( 1)BODY FLAP UPPER DEPENDENT VARIABLE CP

| X/LB | 1.0180 | 1.0460 |
|---|---|---|
| PHI | | |
| .000 | -.4149 | -.4130 |
| 40.000 | -.4315 | -.4394 |

ALPHA ( 3) = 4.021 BETA ( 2) = .178 MACH = 1.0995 Q = 600.25 P = 709.31 RN/L = 3.1949

SECTION ( 1)BODY FLAP UPPER DEPENDENT VARIABLE CP

| X/LB | 1.0180 | 1.0460 |
|---|---|---|
| PHI | | |
| .000 | -.4115 | -.4055 |
| 40.000 | -.4295 | -.4423 |

ALPHA ( 3) = 4.024 BETA ( 3) = 4.243 MACH = 1.0995 Q = 600.25 P = 709.31 RN/L = 3.1949

SECTION ( 1)BODY FLAP UPPER DEPENDENT VARIABLE CP

| X/LB | 1.0180 | 1.0460 |
|---|---|---|
| PHI | | |
| .000 | -.4350 | -.4321 |
| 40.000 | -.3992 | -.4108 |

AMES 11-073(OA148) -140A/B/C/R ORB BODY FLAP UP (XEBF64)

ALPHA ( 4) = 7.977 BETA ( 1) = -3.859 MACH = 1.0995 Q = 600.25 P = 709.31 RN/L = 3.1954

SECTION ( 1)BODY FLAP UPPER DEPENDENT VARIABLE CP

| X/LB | 1.0180 | 1.0460 |
|---|---|---|
| PHI | | |
| .000 | -.4360 | -.4365 |
| 40.000 | -.4597 | -.4559 |

ALPHA ( 4) = 7.981 BETA ( 2) = .181 MACH = 1.0995 Q = 600.25 P = 709.31 RN/L = 3.1954

SECTION ( 1)BODY FLAP UPPER DEPENDENT VARIABLE CP

| X/LB | 1.0180 | 1.0460 |
|---|---|---|
| PHI | | |
| .000 | -.4339 | -.4291 |
| 40.000 | -.4518 | -.4493 |

ALPHA ( 4) = 7.900 BETA ( 3) = 4.237 MACH = 1.0995 Q = 600.25 P = 709.31 RN/L = 3.1954

SECTION ( 1)BODY FLAP UPPER DEPENDENT VARIABLE CP

| X/LB | 1.0180 | 1.0460 |
|---|---|---|
| PHI | | |
| .000 | -.4631 | -.4581 |
| 40.000 | -.4338 | -.4421 |

ALPHA ( 5) = 11.919 BETA ( 1) = -3.844 MACH = 1.0980 Q = 599.84 P = 710.72 RN/L = 3.1951

SECTION ( 1)BODY FLAP UPPER DEPENDENT VARIABLE CP

| X/LB | 1.0180 | 1.0460 |
|---|---|---|
| PHI | | |
| .000 | -.4455 | -.4462 |
| 40.000 | -.4568 | -.4608 |

ALPHA ( 5) = 11.930 BETA ( 2) = .189 MACH = 1.0980 Q = 599.84 P = 710.72 RN/L = 3.1951

SECTION ( 1)BODY FLAP UPPER DEPENDENT VARIABLE CP

| X/LB | 1.0180 | 1.0460 |
|---|---|---|
| PHI | | |
| .000 | -.4240 | -.4237 |
| 40.000 | -.4534 | -.4589 |

ORIGINAL PAGE IS OF POOR QUALITY

AMES 11-073(OA148) -140A/B/C/R CRB BODY FLAP UP (XE8FB4)

ALPHA ( 5) = 11.925 BETA ( 3) = 4.249 MACH = 1.0980 Q = 599.84 P = 710.72 RN/L = 3.1951

SECTION ( 1 BODY FLAP UPPER DEPENDENT VARIABLE CP

| X/LB | 1.0180 | 1.0460 |
|---|---|---|
| PH | | |
| .000 | -.4588 | -.4716 |
| 40.000 | -.4531 | -.4826 |

AMES 11-073(OA148) -140A/B/C/R ORB BODY FLAP UP (XEBF65) ( 05 AUG 75 )

REFERENCE DATA

SREF = 2600.0000 SQ.FT. XMRP = 1076.6800 IN. XO
LREF = 474.8000 IN. YMRP = .0000 IN. YO
BREF = 936.0680 IN. ZMRP = 375.0000 IN. ZO
SCALE = .0300

PARAMETRIC DATA

RUDDER = 5.000 SPDBRK = 55.000
BDFLAP = 16.300 L-ELVN = -4.000
R-ELVN = -4.000 MACH = .900

ALPHA ( 1) = -3.965 BETA ( 1) = -3.837 MACH = .90037 Q = 600.12 P = 1057.6 RN/L = 3.5768

SECTION ( 1)BODY FLAP UPPER DEPENDENT VARIABLE CP

| X/LB | 1.0180 | 1.0460 |
|---|---|---|
| PHI | | |
| .000 | -.2928 | -.2949 |
| 40.000 | -.3216 | -.3677 |

ALPHA ( 1) = -3.963 BETA ( 2) = .195 MACH = .90037 Q = 600.12 P = 1057.6 RN/L = 3.5768

SECTION ( 1)BODY FLAP UPPER DEPENDENT VARIABLE CP

| X/LB | 1.0180 | 1.0460 |
|---|---|---|
| PHI | | |
| .000 | -.2990 | -.3130 |
| 40.000 | -.3105 | -.3518 |

ALPHA ( 1) = -3.957 BETA ( 3) = 4.274 MACH = .90037 Q = 600.12 P = 1057.6 RN/L = 3.5768

SECTION ( 1)BODY FLAP UPPER DEPENDENT VARIABLE CP

| X/LB | 1.0180 | 1.0460 |
|---|---|---|
| PHI | | |
| .000 | -.3107 | -.3244 |
| 40.000 | -.2913 | -.3215 |

ALPHA ( 2) = .052 BETA ( 1) = -3.869 MACH = .90007 Q = 599.62 P = 1057.3 RN/L = 3.5759

SECTION ( 1)BODY FLAP UPPER DEPENDENT VARIABLE CP

| X/LB | 1.0180 | 1.0460 |
|---|---|---|
| PHI | | |
| .000 | -.3021 | -.2955 |
| 40.000 | -.3274 | -.3546 |

AMES 11-073(OA148) -140A/B/C/R ORB BODY FLAP UP (XE8F65)

ALPHA ( 2) = .054 BETA ( 2) = .179 MACH = .90007 Q = 599.62 P = 1057.3 RN/L = 3.5759

SECTION ( 1)BODY FLAP UPPER DEPENDENT VARIABLE CP

| X/LB | 1.0180 | 1.0460 |
|---|---|---|
| PHI | | |
| .000 | -.2985 | -.3014 |
| 40.000 | -.3056 | -.3330 |

ALPHA ( 2) = .050 BETA ( 3) = 4.252 MACH = .90007 Q = 599.62 P = 1057.3 RN/L = 3.5759

SECTION ( 1)BODY FLAP UPPER DEPENDENT VARIABLE CP

| X/LB | 1.0180 | 1.0460 |
|---|---|---|
| PHI | | |
| .000 | -.3022 | -.3115 |
| 40.000 | -.2916 | -.3110 |

ALPHA ( 3) = 4.021 BETA ( 1) = -3.873 MACH = .89817 Q = 598.16 P = 1059.3 RN/L = 3.5705

SECTION ( 1)BODY FLAP UPPER DEPENDENT VARIABLE CP

| X/LB | 1.0180 | 1.0460 |
|---|---|---|
| PHI | | |
| .000 | -.3079 | -.3133 |
| 40.000 | -.3233 | -.3387 |

ALPHA ( 3) = 4.021 BETA ( 2) = .183 MACH = .89817 Q = 598.16 P = 1059.3 RN/L = 3.5705

SECTION ( 1)BODY FLAP UPPER DEPENDENT VARIABLE CP

| X/LB | 1.0180 | 1.0460 |
|---|---|---|
| PHI | | |
| .000 | -.2895 | -.2972 |
| 40.000 | -.3057 | -.3144 |

ALPHA ( 3) = 4.023 BETA ( 3) = 4.246 MACH = .89817 Q = 598.16 P = 1059.3 RN/L = 3.5705

SECTION ( 1)BODY FLAP UPPER DEPENDENT VARIABLE CP

| X/LB | 1.0180 | 1.0460 |
|---|---|---|
| PHI | | |
| .000 | -.3003 | -.3067 |
| 40.000 | -.2752 | -.2991 |

AMES 11-073(OA148) -140A/B/C/R ORB BODY FLAP UP (XE8F65)

ALPHA ( 4) = 7.876 BETA ( 1) = -3.866 MACH = .89873 Q = 598.61 P = 1058.8 RN/L = 3.5706

SECTION ( 1)BODY FLAP UPPER DEPENDENT VARIABLE CP

| X/LB | 1.0180 | 1.0460 |
|---|---|---|
| PHI | | |
| .000 | -.2963 | -.2973 |
| 40.000 | -.3108 | -.3233 |

ALPHA ( 4) = 7.884 BETA ( 2) = .183 MACH = .89873 Q = 598.61 P = 1058.8 RN/L = 3.5706

SECTION ( 1)BODY FLAP UPPER DEPENDENT VARIABLE CP

| X/LB | 1.0180 | 1.0460 |
|---|---|---|
| PHI | | |
| .000 | -.2837 | -.2935 |
| 40.000 | -.2956 | -.3089 |

ALPHA ( 4) = 7.882 BETA ( 3) = 4.244 MACH = .89873 Q = 598.61 P = 1058.8 RN/L = 3.5706

SECTION ( 1)BODY FLAP UPPER DEPENDENT VARIABLE CP

| X/LB | 1.0180 | 1.0460 |
|---|---|---|
| PHI | | |
| .000 | -.2952 | -.3023 |
| 40.000 | -.2684 | -.2902 |

ALPHA ( 5) = 11.937 BETA ( 1) = -3.854 MACH = .89780 Q = 598.05 P = 1060.0 RN/L = 3.5707

SECTION ( 1)BODY FLAP UPPER DEPENDENT VARIABLE CP

| X/LB | 1.0180 | 1.0460 |
|---|---|---|
| PHI | | |
| .000 | -.2851 | -.2903 |
| 40.000 | -.3137 | -.3254 |

ALPHA ( 5) = 11.920 BETA ( 2) = .190 MACH = .89780 Q = 598.05 P = 1060.0 RN/L = 3.5707

SECTION ( 1)BODY FLAP UPPER DEPENDENT VARIABLE CP

| X/LB | 1.0180 | 1.0460 |
|---|---|---|
| PHI | | |
| .000 | -.2870 | -.2872 |
| 40.000 | -.2918 | -.2975 |

AMES 11-073(OA148) -140A/B/C/R ORB BODY FLAP UP (XE8F65)

ALPHA ( 5) = 11.907 BETA ( 3) = 4.258 MACH = .89780 Q = 598.05 P = 1060.0 RN/L = 3.5707

SECTION ( 1)BODY FLAP UPPER DEPENDENT VARIABLE CP

| X/LB | 1.0180 | 1.0460 |
|---|---|---|
| PHI | | |
| .000 | -.2803 | -.2945 |
| 40.000 | -.2850 | -.2974 |

AMES 11-073(OA148) -140A/B/C/R ORB BODY FLAP UP (XE8F66) ( 05 AUG 75 )

REFERENCE DATA

SREF = 2690.0000 SQ.FT. XMRP = 1076.6800 IN. XO
LREF = 474.8000 IN. YMRP = .0000 IN. YO
BREF = 936.0680 IN. ZMRP = 375.0000 IN. ZO
SCALE = .0300

PARAMETRIC DATA

RUDDER = 5.000 SPDBRK = 55.000
BDFLAP = 16.300 L-ELVN = -4.000
R-ELVN = -4.000 MACH = .600

ALPHA ( 1) = -4.037 BETA ( 1) = -7.846 MACH = .59482 Q = 591.26 P = 2387.4 RN/L = 4.8005

SECTION ( 1)BODY FLAP UPPER DEPENDENT VARIABLE CP

| X/LB | 1.0180 | 1.0460 |
|---|---|---|
| PHI | | |
| .000 | -.2601 | -.2530 |
| 40.000 | -.2954 | -.3219 |

ALPHA ( 1) = -3.899 BETA ( 2) = -3.843 MACH = .59482 Q = 591.26 P = 2387.4 RN/L = 4.8005

SECTION ( 1)BODY FLAP UPPER DEPENDENT VARIABLE CP

| X/LB | 1.0180 | 1.0460 |
|---|---|---|
| PHI | | |
| .000 | -.2528 | -.2461 |
| 40.000 | -.2933 | -.3219 |

ALPHA ( 1) = -3.894 BETA ( 3) = .194 MACH = .59482 Q = 591.26 P = 2387.4 RN/L = 4.8005

SECTION ( 1)BODY FLAP UPPER DEPENDENT VARIABLE CP

| X/LB | 1.0180 | 1.0460 |
|---|---|---|
| PHI | | |
| .000 | -.2457 | -.2529 |
| 40.000 | -.2832 | -.3191 |

ALPHA ( 1) = -3.902 BETA ( 4) = 4.271 MACH = .59482 Q = 591.26 P = 2387.4 RN/L = 4.8005

SECTION ( 1)BODY FLAP UPPER DEPENDENT VARIABLE CP

| X/LB | 1.0180 | 1.0460 |
|---|---|---|
| PHI | | |
| .000 | -.2485 | -.2444 |
| 40.000 | -.2758 | -.3016 |

AMES 11-073(OA148) -140A/B/C/R ORB BODY FLAP UP (XE8F66)

ALPHA ( 1) = -3.917 BETA ( 5) = 8.333 MACH = .59482 Q = 591.26 P = 2387.4 RN/L = 4.8005

SECTION ( 1)BODY FLAP UPPER DEPENDENT VARIABLE CP

| X/LB | 1.0180 | 1.0460 |
|---|---|---|
| PHI | | |
| .000 | -.2642 | -.2704 |
| 40.000 | -.2614 | -.2791 |

ALPHA ( 2) = .085 BETA ( 1) = -7.886 MACH = .59550 Q = 592.43 P = 2386.4 RN/L = 4.8075

SECTION ( 1)BODY FLAP UPPER DEPENDENT VARIABLE CP

| X/LB | 1.0180 | 1.0460 |
|---|---|---|
| PHI | | |
| .000 | -.2671 | -.2593 |
| 40.000 | -.2995 | -.3286 |

ALPHA ( 2) = .075 BETA ( 2) = -3.862 MACH = .59550 Q = 592.43 P = 2386.4 RN/L = 4.8075

SECTION ( 1)BODY FLAP UPPER DEPENDENT VARIABLE CP

| X/LB | 1.0180 | 1.0460 |
|---|---|---|
| PHI | | |
| .000 | -.2569 | -.2482 |
| 40.000 | -.2896 | -.3172 |

ALPHA ( 2) = .076 BETA ( 3) = .175 MACH = .59550 Q = 592.43 P = 2386.4 RN/L = 4.8075

SECTION ( 1)BODY FLAP UPPER DEPENDENT VARIABLE CP

| X/LB | 1.0180 | 1.0460 |
|---|---|---|
| PHI | | |
| .000 | -.2517 | -.2529 |
| 40.000 | -.2797 | -.3104 |

ALPHA ( 2) = .073 BETA ( 4) = 4.250 MACH = .59550 Q = 592.43 P = 2386.4 RN/L = 4.8075

SECTION ( 1)BODY FLAP UPPER DEPENDENT VARIABLE CP

| X/LB | 1.0180 | 1.0460 |
|---|---|---|
| PHI | | |
| .000 | -.2552 | -.2529 |
| 40.000 | -.2770 | -.3057 |

AMES 11-073(OA148) -140A/B/C/R ORB BODY FLAP UP (XE8F66)

ALPHA ( 2) = .069 BETA ( 5) = 8.308 MACH = .59550 Q = 592.43 P = 2386.4 RN/L = 4.8075

SECTION ( 1)BODY FLAP UPPER DEPENDENT VARIABLE CP

| X/LB | 1.0180 | 1.0460 |
|---|---|---|
| PHI | | |
| .000 | -.2824 | -.2841 |
| 40.000 | -.2625 | -.2839 |

ALPHA ( 3) = 4.021 BETA ( 1) = -7.899 MACH = .59494 Q = 591.36 P = 2386.7 RN/L = 4.8049

SECTION ( 1)BODY FLAP UPPER DEPENDENT VARIABLE CP

| X/LB | 1.0180 | 1.0460 |
|---|---|---|
| PHI | | |
| .000 | -.2807 | -.2697 |
| 40.000 | -.3065 | -.3250 |

ALPHA ( 3) = 4.024 BETA ( 2) = -3.864 MACH = .59494 Q = 591.36 P = 2386.7 RN/L = 4.8049

SECTION ( 1)BODY FLAP UPPER DEPENDENT VARIABLE CP

| X/LB | 1.0180 | 1.0460 |
|---|---|---|
| PHI | | |
| .000 | -.2613 | -.2642 |
| 40.000 | -.2931 | -.3230 |

ALPHA ( 3) = 4.022 BETA ( 3) = .186 MACH = .59494 Q = 591.36 P = 2386.7 RN/L = 4.8049

SECTION ( 1)BODY FLAP UPPER DEPENDENT VARIABLE CP

| X/LB | 1.0180 | 1.0460 |
|---|---|---|
| PHI | | |
| .000 | -.2555 | -.2591 |
| 40.000 | -.2703 | -.2900 |

ALPHA ( 3) = 4.025 BETA ( 4) = 4.244 MACH = .59494 Q = 591.36 P = 2386.7 RN/L = 4.8049

SECTION ( 1)BODY FLAP UPPER DEPENDENT VARIABLE CP

| X/LB | 1.0180 | 1.0460 |
|---|---|---|
| PHI | | |
| .000 | -.2731 | -.2755 |
| 40.000 | -.2693 | -.2951 |

AMES 11-073(OA148) -140A/B/C/R ORB BODY FLAP UP (XE8F66)

ALPHA ( 3) = 4.031 BETA ( 5) = 8.294 MACH = .59494 Q = 591.36 P = 2386.7 RN/L = 4.8049

SECTION ( 1)BODY FLAP UPPER DEPENDENT VARIABLE CP

| X/LB | 1.0180 | 1.0460 |
|---|---|---|
| PHI | | |
| .000 | -.2914 | -.2987 |
| 40.000 | -.2509 | -.2679 |

ALPHA ( 4) = 7.869 BETA ( 1) = -7.888 MACH = .59424 Q = 590.06 P = 2387.2 RN/L = 4.7971

SECTION ( 1)BODY FLAP UPPER DEPENDENT VARIABLE CP

| X/LB | 1.0180 | 1.0460 |
|---|---|---|
| PHI | | |
| .000 | -.2816 | -.2907 |
| 40.000 | -.3013 | -.3194 |

ALPHA ( 4) = 7.986 BETA ( 2) = -3.859 MACH = .59424 Q = 590.06 P = 2387.2 RN/L = 4.7971

SECTION ( 1)BODY FLAP UPPER DEPENDENT VARIABLE CP

| X/LB | 1.0170 | 1.0460 |
|---|---|---|
| PHI | | |
| .000 | -.2624 | -.2686 |
| 40.000 | -.2859 | -.3065 |

ALPHA ( 4) = 7.991 BETA ( 3) = .178 MACH = .59424 Q = 590.06 P = 2387.2 RN/L = 4.7971

SECTION ( 1)BODY FLAP UPPER DEPENDENT VARIABLE CP

| X/LB | 1.0180 | 1.0460 |
|---|---|---|
| PHI | | |
| .000 | -.2409 | -.2443 |
| 40.000 | -.2576 | -.2825 |

ALPHA ( 4) = 7.992 BETA ( 4) = 4.237 MACH = .59424 Q = 590.06 P = 2387.2 RN/L = 4.7971

SECTION ( 1)BODY FLAP UPPER DEPENDENT VARIABLE CP

| X/LB | 1.0180 | 1.0460 |
|---|---|---|
| PHI | | |
| .000 | -.2724 | -.2812 |
| 40.000 | -.2465 | -.2759 |

AMES 11-073(OA148) -140A/B/C/R ORB BODY FLAP UP (XE8F66)

ALPHA ( 4) = 7.989 BETA ( 5) = 8.293 MACH = .59424 Q = 590.06 P = 2387.2 RN/L = 4.7971

SECTION ( 1)BODY FLAP UPPER DEPENDENT VARIABLE CP

| X/LB | 1.0180 | 1.0460 |
|---|---|---|
| PHI | | |
| .000 | -.2983 | -.3068 |
| 40.000 | -.2430 | -.2572 |

ALPHA ( 5) = 12.002 BETA ( 1) = -7.846 MACH = .59422 Q = 590.06 P = 2387.2 RN/L = 4.7978

SECTION ( 1)BODY FLAP UPPER DEPENDENT VARIABLE CP

| X/LB | 1.0180 | 1.0460 |
|---|---|---|
| PHI | | |
| .000 | -.2816 | -.2787 |
| 40.000 | -.2992 | -.3148 |

ALPHA ( 5) = 12.020 BETA ( 2) = -3.839 MACH = .59422 Q = 590.06 P = 2387.2 RN/L = 4.7978

SECTION ( 1)BODY FLAP UPPER DEPENDENT VARIABLE CP

| X/LB | 1.0180 | 1.0460 |
|---|---|---|
| PHI | | |
| .000 | -.2491 | -.2602 |
| 40.000 | -.2755 | -.2985 |

ALPHA ( 5) = 11.983 BETA ( 3) = .186 MACH = .59422 Q = 590.06 P = 2387.2 RN/L = 4.7978

SECTION ( 1)BODY FLAP UPPER DEPENDENT VARIABLE CP

| X/LB | 1.0180 | 1.0460 |
|---|---|---|
| PHI | | |
| .000 | -.2404 | -.2494 |
| 40.000 | -.2553 | -.2810 |

ALPHA ( 5) = 11.980 BETA ( 4) = 4.247 MACH = .59422 Q = 590.06 P = 2387.2 RN/L = 4.7978

SECTION ( 1)BODY FLAP UPPER DEPENDENT VARIABLE CP

| X/LB | 1.0180 | 1.0460 |
|---|---|---|
| PHI | | |
| .000 | -.2701 | -.2777 |
| 40.000 | -.2411 | -.2518 |

ORIGINAL PAGE IS OF POOR QUALITY

AMES 11-073(OA148) -140A/B/C/R ORB BODY FLAP UP (XEBF66)

ALPHA ( 5) = 11.973 BETA ( 5) = 8.307 MACH = .59422 Q = 590.06 P = 2387.2 RN/L = 4.7978

SECTION ( 1)BODY FLAP UPPER DEPENDENT VARIABLE CP

| X/LB | 1.0180 | 1.0460 |
|---|---|---|
| PHI | | |
| .000 | -.2842 | -.2953 |
| 40.000 | -.2374 | -.2645 |

AMES 11-073(OA148) -140A/B/C/R ORB BODY FLAP UP (XEBF67) ( 05 AUG 75 )

REFERENCE DATA

SREF = 2690.0000 SQ.FT. XMRP = 1076.6800 IN. XO
LREF = 474.8000 IN. YMRP = .0000 IN. YO
BREF = 936.0680 IN. ZMRP = 375.0000 IN. ZO
SCALE = .0300

PARAMETRIC DATA

RUDDER = .000 SPDBRK = 55.000
BDFLAP = 22.500 L-ELVN = -4.000
R-ELVN = -4.000 MACH = .900

ALPHA ( 1) = -3.954 BETA ( 1) = -3.849 MACH = .90057 Q = 600.66 P = 1058.0 RN/L = 3.6340

SECTION ( 1)BODY FLAP UPPER DEPENDENT VARIABLE CP

| X/LB | 1.0180 | 1.0460 |
|---|---|---|
| PHI | | |
| .000 | -.3259 | -.3265 |
| 40.000 | -.3427 | -.3607 |

ALPHA ( 1) = -3.952 BETA ( 2) = .192 MACH .90057 Q = 600.66 P = 1058.0 RN/L = 3.6340

SECTION ( 1)BODY FLAP UPPER DEPENDENT VARIABLE CP

| X/LB | 1.0180 | 1.0460 |
|---|---|---|
| PHI | | |
| .000 | -.3273 | -.3258 |
| 40.000 | -.3327 | -.3653 |

ALPHA ( 1) = -3.959 BETA ( 3) = 4.272 MACH = .90057 Q = 600.66 P = 1058.0 RN/L = 3.6340

SECTION ( 1)BODY FLAP UPPER DEPENDENT VARIABLE CP

| X/LB | 1.0180 | 1.0460 |
|---|---|---|
| PHI | | |
| .000 | -.3284 | -.3327 |
| 40.000 | -.3308 | -.3534 |

ALPHA ( 2) = .049 BETA ( 1) = -3.871 MACH = .90130 Q = 601.04 P = 1056.9 RN/L = 3.6167

SECTION ( 1)BODY FLAP UPPER DEPENDENT VARIABLE CP

| X/LB | 1.0180 | 1.0460 |
|---|---|---|
| PHI | | |
| .000 | -.3267 | -.3314 |
| 40.000 | -.3352 | -.3534 |

AMES 11-073(OA148) -140A/B/C/R ORB BODY FLAP UP (XEBF67)

ALPHA ( 2) = .052 BETA ( 2) = .177 MACH = .90130 Q = 601.04 P = 1056.9 RN/L = 3.6167

SECTION ( 1)BODY FLAP UPPER DEPENDENT VARIABLE CP

| X/LB | 1.0180 | 1.0460 |
|---|---|---|
| PHI | | |
| .000 | -.3256 | -.3291 |
| 40.000 | -.3282 | -.3355 |

ALPHA ( 2) = .052 BETA ( 3) = 4.253 MACH = .90130 Q = 601.04 P = 1056.9 RN/L = 3.6167

SECTION ( 1)BODY FLAP UPPER DEPENDENT VARIABLE CP

| X/LB | 1.0180 | 1.0460 |
|---|---|---|
| PHI | | |
| .000 | -.3299 | -.3343 |
| 40.000 | -.3235 | -.3483 |

ALPHA ( 2) = 4.019 BETA ( 1) = -3.877 MACH = .89987 Q = 599.87 P = 1058.3 RN/L = 3.6007

SECTION ( 1)BODY FLAP UPPER DEPENDENT VARIABLE CP

| X/LB | 1.0180 | 1.0460 |
|---|---|---|
| PHI | | |
| .000 | -.3246 | -.3327 |
| 40.000 | -.3341 | -.3592 |

ALPHA ( 3) = 4.018 BETA ( 2) = .181 MACH = .89987 Q = 599.87 P = 1058.3 RN/L = 3.6007

SECTION ( 1)BODY FLAP UPPER DEPENDENT VARIABLE CP

| X/LB | 1.0180 | 1.0460 |
|---|---|---|
| PHI | | |
| .000 | -.3167 | -.3202 |
| 40.000 | -.3250 | -.3486 |

ALPHA ( 3) = 4.022 BETA ( 3) = 4.243 MACH = .89997 Q = 599.87 P = 1058.3 RN/L = 3.6007

SECTION ( 1)BODY FLAP UPPER DEPENDENT VARIABLE CP

| X/LB | 1.0180 | 1.0460 |
|---|---|---|
| PHI | | |
| .000 | -.3268 | -.3317 |
| 40.000 | -.3140 | -.3250 |

AMES 11-073(OA148) -140A/B/C/R ORB BODY FLAP UP (XEBF67)

ALPHA ( 4) = 7.995 BETA ( 1) = -3.860 MACH = .90040 Q = 600.32 P = 1057.8 RN/L = 3.5837

SECTION ( 1)BODY FLAP UPPER DEPENDENT VARIABLE CP

| X/LB | 1.0180 | 1.0460 |
|---|---|---|
| PHI | | |
| .000 | -.3235 | -.3288 |
| 40.000 | -.3319 | -.3480 |

ALPHA ( 4) = 7.993 BETA ( 2) = .182 MACH = .90040 Q = 600.32 P = 1057.6 RN/L = 3.5837

SECTION ( 1)BODY FLAP UPPER DEPENDENT VARIABLE CP

| X/LB | 1.0180 | 1.0460 |
|---|---|---|
| PHI | | |
| .000 | -.3220 | -.3173 |
| 40.000 | -.3182 | -.3421 |

ALPHA ( 4) = 7.992 BETA ( 3) = 4.242 MACH = .90040 Q = 600.32 P = 1057.8 RN/L = 3.5837

SECTION ( 1)BODY FLAP UPPER DEPENDENT VARIABLE CP

| X/LB | 1.0180 | 1.0460 |
|---|---|---|
| PHI | | |
| .000 | -.3318 | -.3374 |
| 40.000 | -.3147 | -.3218 |

ALPHA ( 5) = 11.953 BETA ( 1) = -3.856 MACH = .89987 Q = 599.87 P = 1058.3 RN/L = 3.5762

SECTION ( 1)BODY FLAP UPPER DEPENDENT VARIABLE CP

| X/LB | 1.0180 | 1.0460 |
|---|---|---|
| PHI | | |
| .000 | -.3209 | -.3278 |
| 40.000 | -.3360 | -.3644 |

ALPHA ( 5) = 11.953 BETA ( 2) = .189 MACH = .89987 Q = 599.87 P = 1058.3 RN/L = 3.5762

SECTION ( 1)BODY FLAP UPPER DEPENDENT VARIABLE CP

| X/LB | 1.0180 | 1.0460 |
|---|---|---|
| PHI | | |
| .000 | -.3224 | -.3129 |
| 40.000 | -.3316 | -.3392 |

AMES 11-073(OA148) -140A/B/C/R ORB BODY FLAP UP (XEBF57)

ALPHA ( B) = 11.953 BETA ( B) = 4.261 MACH = .89997 Q = 599.87 P = 1059.3 PNL = 3.5752

SECTION ( ) BODY FLAP UPPER DEPENDENT VARIABLE CP

| X/LB | 1.0190 | 1.0460 |
|---|---|---|
| PHI | | |
| .000 | -.3246 | -.3322 |
| 40.000 | -.3085 | -.3334 |

AMES 11-073(OA148) -140A/B/C/R ORB BODY FLAP UP (XE8F68) ( 05 AUG 75 )

REFERENCE DATA

SREF = 2690.0000 SQ.FT. XMRP = 1076.6800 IN. XO
LREF = 474.8000 IN. YMRP = .0000 IN. YO
BREF = 936.0680 IN. ZMRP = 375.0000 IN. ZO
SCALE = .0300

PARAMETRIC DATA

RUDDER = .000 SPDBRK = 55.000
BDFLAP = 22.500 L-ELVN = -4.000
R-ELVN = -4.000 MACH = .600

ALPHA ( 1) = -3.934 BETA ( 1) = -7.845 MACH = .59574 Q = 593.04 P = 2387.2 RN/L = 4.8347

SECTION ( 1)BODY FLAP UPPER DEPENDENT VARIABLE CP

| X/LB | 1.0180 | 1.0460 |
|---|---|---|
| PHI | | |
| .000 | -.2933 | -.2888 |
| 40.000 | -.3085 | -.3431 |

ALPHA ( 1) = -3.918 BETA ( 2) = -3.844 MACH = .59574 Q = 593.04 P = 2387.2 RN/L = 4.8347

SECTION ( 1)BODY FLAP UPPER DEPENDENT VARIABLE CP

| X/LB | 1.0180 | 1.0460 |
|---|---|---|
| PHI | | |
| .000 | -.2921 | -.2663 |
| 40.000 | -.3157 | -.3424 |

ALPHA ( 1) = -3.895 BETA ( 3) = .193 MACH = .59574 Q = 593.04 P = 2387.2 RN/L = 4.8347

SECTION ( 1)BODY FLAP UPPER DEPENDENT VARIABLE CP

| X/LB | 1.0180 | 1.0460 |
|---|---|---|
| PHI | | |
| .000 | -.2848 | -.2718 |
| 40.000 | -.3085 | -.3378 |

ALPHA ( 1) = -3.903 BETA ( 4) = 4.270 MACH = .59574 Q = 593.04 P = 2387.2 RN/L = 4.8347

SECTION ( 1)BODY FLAP UPPER DEPENDENT VARIABLE CP

| X/LB | 1.0180 | 1.0460 |
|---|---|---|
| PHI | | |
| .000 | -.2932 | -.2856 |
| 40.000 | -.3097 | -.3256 |

ORIGINAL PAGE IS
OF POOR QUALITY

AMES 11-073(OA148) -140A/B/C/R ORB BODY FLAP UP (XE8F68)

ALPHA ( 1) = -3.916 BETA ( 5) = 8.339 MACH = .59574 Q = 593.04 P = 2387.2 RN/L = 4.8347

SECTION ( 1)BODY FLAP UPPER DEPENDENT VARIABLE CP

| X/LB | 1.0180 | 1.0460 |
|---|---|---|
| PHI | | |
| .000 | -.2951 | -.3008 |
| 40.000 | -.2852 | -.3018 |

ALPHA ( 2) = .067 BETA ( 1) = -7.888 MACH = .59556 Q = 592.68 P = 2387.2 RN/L = 4.8372

SECTION ( 1)BODY FLAP UPPER DEPENDENT VARIABLE CP

| X/LB | 1.0180 | 1.0460 |
|---|---|---|
| PHI | | |
| .000 | -.3068 | -.2933 |
| 40.000 | -.3094 | -.3425 |

ALPHA ( 2) = .076 BETA ( 2) = -3.860 MACH = .59556 Q = 592.68 P = 2387.2 RN/L = 4.8372

SECTION ( 1)BODY FLAP UPPER DEPENDENT VARIABLE CP

| X/LB | 1.0180 | 1.0460 |
|---|---|---|
| PHI | | |
| .000 | -.2911 | -.2848 |
| 40.000 | -.3032 | -.3302 |

ALPHA ( 2) = .078 BETA ( 3) = .177 MACH = .59556 Q = 592.68 P = 2387.2 RN/L = 4.8372

SECTION ( 1)BODY FLAP UPPER DEPENDENT VARIABLE CP

| X/LB | 1.0180 | 1.0460 |
|---|---|---|
| PHI | | |
| .000 | -.2874 | -.2822 |
| 40.000 | -.3026 | -.3215 |

ALPHA ( 2) = .074 BETA ( 4) = 4.252 MACH = .59556 Q = 592.68 P = 2387.2 RN/L = 4.8372

SECTION ( 1)BODY FLAP UPPER DEPENDENT VARIABLE CP

| X/LB | .0180 | 1.0460 |
|---|---|---|
| PHI | | |
| .000 | -.2898 | -.2836 |
| 40.000 | -.3094 | -.3286 |

AMES 11-073(OA148) -140A/B/C/R ORB BODY FLAP UP (XE8F68)

ALPHA ( 2) = .069 BETA ( 5) = 8.307 MACH = .59556 Q = 592.68 P = 2387.2 RN/L = 4.8372

SECTION ( 1)BODY FLAP UPPER DEPENDENT VARIABLE CP

| X/LB | 1.0180 | 1.0460 |
|---|---|---|
| PHI | | |
| .000 | -.3037 | -.3066 |
| 40.000 | -.2999 | -.3094 |

ALPHA ( 3) = 4.022 BETA ( 1) = -7.901 MACH = .59644 Q = 594.20 P = 2386.1 RN/L = 4.8446

SECTION ( 1)BODY FLAP UPPER DEPENDENT VARIABLE CP

| X/LB | 1.0180 | 1.0460 |
|---|---|---|
| PHI | | |
| .000 | -.3069 | -.3095 |
| 40.000 | -.3163 | -.3364 |

ALPHA ( 3) = 4.025 BETA ( 2) = -3.862 MACH = .59644 Q = 594.20 P = 2386.1 RN/L = 4.8446

SECTION ( 1)BODY FLAP UPPER DEPENDENT VARIABLE CP

| X/LB | 1.0180 | 1.0460 |
|---|---|---|
| PHI | | |
| .000 | -.2986 | -.2991 |
| 40.000 | -.3052 | -.3437 |

ALPHA ( 3) = 4.023 BETA ( 3) = .182 MACH = .59644 Q = 594.20 P = 2386.1 RN/L = 4.8446

SECTION ( 1)BODY FLAP UPPER DEPENDENT VARIABLE CP

| X/LB | 1.0180 | 1.0460 |
|---|---|---|
| PHI | | |
| .000 | -.2898 | -.2985 |
| 40.000 | -.2935 | -.3203 |

ALPHA ( 3) = 4.027 BETA ( 4) = 4.243 MACH = .59644 Q = 594.20 P = 2386.1 RN/L = 4.8446

SECTION ( 1)BODY FLAP UPPER DEPENDENT VARIABLE CP

| X/LB | 1.0180 | 1.0460 |
|---|---|---|
| PHI | | |
| .000 | -.3012 | -.3005 |
| 40.000 | -.3035 | -.3095 |

AMES 11-073(OA148) -140A/B/C/R ORB BODY FLAP UP (XE8F68)

ALPHA ( 3) = 4.033 BETA ( 5) = 8.290 MACH = .59644 Q = 594.20 P = 2386.1 RN/L = 4.8446

SECTION ( 1)BODY FLAP UPPER DEPENDENT VARIABLE CP

| X/LB | 1.0180 | 1.0460 |
|---|---|---|
| PHI | | |
| .000 | -.3126 | -.3280 |
| 40.000 | -.2876 | -.2924 |

ALPHA ( 4) = 7.982 BETA ( 1) = -7.890 MACH = .59642 Q = 594.33 P = 2386.8 RN/L = 4.8439

SECTION ( 1)BODY FLAP UPPER DEPENDENT VARIABLE CP

| X/LB | 1.0180 | 1.0460 |
|---|---|---|
| PHI | | |
| .000 | -.3069 | -.3129 |
| 40.000 | -.3211 | -.3456 |

ALPHA ( 4) = 7.993 BETA ( 2) = -3.860 MACH = .59642 Q = 594.33 P = 2386.8 RN/L = 4.8439

SECTION ( 1)BODY FLAP UPPER DEPENDENT VARIABLE CP

| X/LB | 1.0180 | 1.0460 |
|---|---|---|
| PHI | | |
| .000 | -.2917 | -.2931 |
| 40.000 | -.3007 | -.3351 |

ALPHA ( 4) = 7.991 BETA ( 3) = .185 MACH = .59642 Q = 594.33 P = 2386.8 RN/L = 4.8439

SECTION ( 1)BODY FLAP UPPER DEPENDENT VARIABLE CP

| X/LB | 1.0180 | 1.0460 |
|---|---|---|
| PHI | | |
| .000 | -.2825 | -.2813 |
| 40.000 | -.2848 | -.3009 |

ALPHA ( 4) = 7.992 BETA ( 4) = 4.234 MACH = .59642 Q = 594.33 P = 2386.8 RN/L = 4.8439

SECTION ( 1)BODY FLAP UPPER DEPENDENT VARIABLE CP

| X/LB | 1.0180 | 1.0460 |
|---|---|---|
| PHI | | |
| .000 | -.2985 | -.3055 |
| 40.000 | -.2898 | -.3020 |

AMES 11-073(OA148) -140A/B/C/R ORB BODY FLAP UP (XE8F68)

ALPHA ( 4) = 7.990 BETA ( 5) = 8.288 MACH = .59642 Q = 594.33 P = 2386.8 RN/L = 4.8439

SECTION ( 1)BODY FLAP UPPER DEPENDENT VARIABLE CP

| X/LB | 1.0180 | 1.0460 |
|---|---|---|
| PHI | | |
| .000 | -.3169 | -.3393 |
| 40.000 | -.2796 | -.2897 |

ALPHA ( 5) = 11.959 BETA ( 1) = -7.852 MACH = .59656 Q = 594.57 P = 2386.7 RN/L = 4.8403

SECTION ( 1)BODY FLAP UPPER DEPENDENT VARIABLE CP

| X/LB | 1.0180 | 1.0460 |
|---|---|---|
| PHI | | |
| .000 | -.3023 | -.3075 |
| -0.000 | -.3183 | -.3395 |

ALPHA ( 5) = 11.978 BETA ( 2) = -3.840 MACH = .59656 Q = 594.57 P = 2386.7 RN/L = 4.8403

SECTION ( 1)BODY FLAP UPPER DEPENDENT VARIABLE CP

| X/LB | 1.0180 | 1.0460 |
|---|---|---|
| PHI | | |
| .000 | -.2939 | -.2835 |
| 40.000 | -.3016 | -.3247 |

ALPHA ( 5) = 11.981 BETA ( 3) = .186 MACH = .59656 Q = 594.57 P = 2386.7 RN/L = 4.8403

SECTION ( 1)BODY FLAP UPPER DEPENDENT VARIABLE CP

| X/LB | 1.0180 | 1.0460 |
|---|---|---|
| PHI | | |
| .000 | -.2829 | -.2820 |
| 40.000 | -.2984 | -.3112 |

ALPHA ( 5) = 11.977 BETA ( 4) = 4.246 MACH = .59656 Q = 594.57 P = 2386.7 RN/L = 4.8403

SECTION ( 1)BODY FLAP UPPER DEPENDENT VARIABLE CP

| X/LB | 1.0180 | 1.0460 |
|---|---|---|
| PHI | | |
| .000 | -.2964 | -.3119 |
| -0.000 | -.2752 | -.2896 |

AMES 11-073(OA148) -140A/B/C/R ORB BODY FLAP UP (XE8F68)

ALPHA ( 5) = 11.969 BETA ( 5) = 8.308 MACH = .59656 Q = 594.57 P = 2386.7 RN/L = 4.8403

SECTION ( 1)BODY FLAP UPPER DEPENDENT VARIABLE CP

| X/LB | 1.0180 | 1.0460 |
|---|---|---|
| PHI | | |
| .000 | -.3157 | -.3322 |
| 40.000 | -.2640 | -.2843 |

AMES 11-073(OA148) -140A/B/C ORB BODY FLAP UP (XE8F69) ( 05 AUG 75 )

REFERENCE DATA

SREF = 2690.0000 SQ.FT. XMRP = 1076.6800 IN. XO
LREF = 474.8000 IN. YMRP = .0000 IN. YO
BREF = 935.0690 IN. ZMRP = 375.0000 IN. ZO
SCALE = .0300

PARAMETRIC DATA

RUDDER = .000 SPDBRK = 55.000
BDFLAP = 22.500 L-ELVN = -10.000
R-ELVN = -10.000 MACH = .900

ALPHA ( 1) = -3.989 BETA ( 1) = -3.851 MACH = .89987 Q = 599.88 P = 1058.3 RN/L = 3.6263

SECTION ( 1)BODY FLAP UPPER DEPENDENT VARIABLE CP

| X/LB | 1.0180 | 1.0460 |
|---|---|---|
| PHI | | |
| .000 | -.3275 | -.3253 |
| 40.000 | -.3367 | -.3573 |

ALPHA ( 1) = -3.967 BETA ( 2) = .189 MACH = .89987 Q = 599.88 P = 1058.3 RN/L = 3.6263

SECTION ( 1)BODY FLAP UPPER DEPENDENT VARIABLE CP

| X/LB | 1.0180 | 1.0460 |
|---|---|---|
| PHI | | |
| .000 | -.3251 | -.3322 |
| 40.000 | -.3223 | -.3453 |

ALPHA ( 1) = -3.991 BETA ( 3) = 4.272 MACH = .89987 Q = 599.88 P = 1058.3 RN/L = 3.6263

SECTION ( 1)BODY FLAP UPPER DEPENDENT VARIABLE CP

| X/LB | 1.0180 | 1.0460 |
|---|---|---|
| PHI | | |
| .000 | -.3389 | -.3417 |
| 40.000 | -.3135 | -.3147 |

ALPHA ( 2) = .008 BETA ( 1) = -3.868 MACH = .90190 Q = 601.65 P = 1056.6 RN/L = 3.6047

SECTION ( 1)BODY FLAP UPPER DEPENDENT VARIABLE CP

| X/LB | 1.0180 | 1.0460 |
|---|---|---|
| PHI | | |
| .000 | -.3302 | -.3295 |
| 40.000 | -.3333 | -.3538 |

AMES 11-073(OA148) -140A/B/C ORB BODY FLAP UP (XEBF69)

ALPHA ( 2) = .010 BETA ( 2) = .177 MACH = .90190 Q = 601.65 P = 1056.6 RN/L = 3.6047

SECTION ( 1)BODY FLAP UPPER DEPENDENT VARIABLE CP

| X/LB | 1.0180 | 1.0460 |
|---|---|---|
| PHI | | |
| .000 | -.3186 | -.3259 |
| 40.000 | -.3195 | -.3404 |

ALPHA ( 2) = .007 BETA ( 3) = 4.253 MACH = .90190 Q = 601.65 P = 1056.6 RN/L = 3.6047

SECTION ( 1)BODY FLAP UPPER DEPENDENT VARIABLE CP

| X/LB | 1.0180 | 1.0460 |
|---|---|---|
| PHI | | |
| .000 | -.3301 | -.3473 |
| 40.000 | -.3163 | -.3163 |

ALPHA ( 3) = 4.005 BETA ( 1) = -3.869 MACH = .90083 Q = 600.78 P = 1057.6 RN/L = 3.5915

SECTION ( 1)BODY FLAP UPPER DEPENDENT VARIABLE CP

| X/LB | 1.0180 | 1.0460 |
|---|---|---|
| PHI | | |
| .000 | -.3378 | -.3278 |
| 40.000 | -.3373 | -.3505 |

ALPHA ( 3) = 4.002 BETA ( 2) = .179 MACH = .90083 Q = 600.78 P = 1057.6 RN/L = 3.5915

SECTION ( 1)BODY FLAP UPPER DEPENDENT VARIABLE CP

| X/LB | 1.0180 | 1.0460 |
|---|---|---|
| PHI | | |
| .000 | -.3298 | -.3333 |
| 40.000 | -.3220 | -.3469 |

ALPHA ( 3) = 4.005 BETA ( 3) = 4.240 MACH = .90083 Q = 600.78 P = 1057.6 RN/L = 3.5915

SECTION ( 1)BODY FLAP UPPER DEPENDENT VARIABLE CP

| X/LB | 1.0180 | 1.0460 |
|---|---|---|
| PHI | | |
| .000 | -.3291 | -.3416 |
| 40.000 | -.3052 | -.3234 |

AMES 11-073(OA148) -140A/B/C ORB BODY FLAP UP (XE8F69)

ALPHA ( 4) = 7.976 BETA ( 1) = -3.869 MACH = .89993 Q = 600.24 P = 1058.8 RN/L = 3.5857

SECTION ( 1)BODY FLAP UPPER DEPENDENT VARIABLE CP

| X/LB | 1.0180 | 1.0460 |
|---|---|---|
| PHI | | |
| .000 | -.3314 | -.3437 |
| 40.000 | -.3307 | -.3611 |

ALPHA ( 4) = 7.978 BETA ( 2) = .182 MACH = .89993 Q = 600.24 P = 1058.8 RN/L = 3.5857

SECTION ( 1)BODY FLAP UPPER DEPENDENT VARIABLE CP

| X/LB | 1.0180 | 1.0460 |
|---|---|---|
| PHI | | |
| .000 | -.3282 | -.3277 |
| 40.000 | -.3237 | -.3248 |

ALPHA ( 4) = 7.979 BETA ( 3) = 4.241 MACH = .89993 Q = 600.24 P = 1058.8 RN/L = 3.5857

SECTION ( 1)BODY FLAP UPPER DEPENDENT VARIABLE CP

| X/LB | 1.0180 | 1.0460 |
|---|---|---|
| PHI | | |
| .000 | -.3316 | -.3479 |
| 40.000 | -.3046 | -.3207 |

ALPHA ( 5) = 11.950 BETA ( 1) = -3.853 MACH = .90010 Q = 600.36 P = 1058.5 RN/L = 3.5793

SECTION ( 1)BODY FLAP UPPER DEPENDENT VARIABLE CP

| X/LB | 1.0180 | 1.0460 |
|---|---|---|
| PHI | | |
| .000 | -.3310 | -.3329 |
| 40.000 | -.3368 | -.3530 |

ALPHA ( 5) = 11.955 BETA ( 2) = .189 MACH = .90010 Q = 600.36 P = 1058.5 RN/L = 3.5793

SECTION ( 1)BODY FLAP UPPER DEPENDENT VARIABLE CP

| X/LB | 1.0180 | 1.0460 |
|---|---|---|
| PHI | | |
| .000 | -.3190 | -.3213 |
| 40.000 | -.3291 | -.3436 |

AMES 11-073(OA148) -140A/B/C ORB BODY FLAP UP (XEBF69)

ALPHA ( 5) = 11.948 BETA ( 3) = 4.260 MACH = .90010 Q = 600.36 P = 1058.5 RN/L 4793

SECTION ( 1)BODY FLAP UPPER DEPENDENT VARIABLE CP

| X/LB | 1.0180 | 1.0460 |
|---|---|---|
| PHI | | |
| .000 | -.3217 | -.3484 |
| 40.000 | -.3203 | -.3309 |

AMES 11-073(OA148) -140A/B/C ORB BODY FLAP UP (XE8F70) ( 05 AUG 75 )

REFERENCE DATA

SREF = 8700.0000 SQ.FT. XMRP = 1076.6800 IN. XO
LREF = 474.0000 IN. YMRP = .0000 IN. YO
BREF = 960.0000 IN. ZMRP = 375.0000 IN. ZO
SCALE = .0600

PARAMETRIC DATA

RUDDER = .000 SPDBRK = 55.000
BDFLAP = 22.500 L-ELVN = -10.000
R-ELVN = -10.000 MACH = .600

ALPHA ( 1) = -3.949 BETA ( 1) = -7.852 MACH = .59666 Q = 594.81 P = 2387.0 RN/L = 4.8517

SECTION ( 1)BODY FLAP UPPER DEPENDENT VARIABLE CP

X/LB 1.0180 1.0460

PHI
.000 -.3094 -.3063
-0.000 -.3099 -.3380

ALPHA ( 1) = -3.933 BETA ( 2) = -3.843 MACH = .59666 Q = 594.81 P = 2387.0 RN/L = 4.8517

SECTION ( 1)BODY FLAP UPPER DEPENDENT VARIABLE CP

X/LB 1.0180 1.0460

PHI
.000 -.3022 -.2904
-0.000 -.3215 -.3420

ALPHA ( 1) = -3.929 BETA ( 3) = .189 MACH = .59666 Q = 594.81 P = 2387.0 RN/L = 4.8517

SECTION ( 1)BODY FLAP UPPER DEPENDENT VARIABLE CP

X/LB 1.0180 1.0460

PHI
.000 -.3028 -.2915
-0.000 -.3127 -.3354

ALPHA ( 1) = -3.935 BETA ( 4) = 4.269 MACH = .59666 Q = 594.81 P = 2387.0 RN/L = 4.8517

SECTION ( 1)BODY FLAP UPPER DEPENDENT VARIABLE CP

X/LB 1.0180 1.0460

PHI
.000 -.3061 -.2922
-0.000 -.3149 -.3335

ORIGINAL PAGE IS
OF POOR QUALITY

AMES 11-073(OA148) -140A/B/C ORB BODY FLAP UP (XEBF70)

ALPHA ( 1) = -3.949 BETA ( 5) = 8.334 MACH = .59566 Q = 594.81 P = 2387.0 RN/L = 4.8517

SECTION ( 1)BODY FLAP UPPER DEPENDENT VARIABLE CP

| X/LB | 1.0180 | 1.0460 |
|---|---|---|
| PHI | | |
| .000 | -.3009 | -.3115 |
| 40.000 | -.3087 | -.3129 |

ALPHA ( 2) = .049 BETA ( 1) = -7.888 MACH = .59628 Q = 593.97 P = 2386.4 RN/L = 4.8452

SECTION ( 1)BODY FLAP UPPER DEPENDENT VARIABLE CP

| X/LB | 1.0180 | 1.0460 |
|---|---|---|
| PHI | | |
| .000 | -.3176 | -.3150 |
| 40.000 | -.3214 | -.3433 |

ALPHA ( 2) = .055 BETA ( 2) = -3.864 MACH = .59628 Q = 593.97 P = 2386.4 RN/L = 4.8452

SECTION ( 1)BODY FLAP UPPER DEPENDENT VARIABLE CP

| X/LB | 1.0180 | 1.0460 |
|---|---|---|
| PHI | | |
| .000 | -.3027 | -.2916 |
| 40.000 | -.3005 | -.3400 |

ALPHA ( 2) = .052 BETA ( 3) = .180 MACH = .59628 Q = 593.97 P = 2386.4 RN/L = 4.8452

SECTION ( 1)BODY FLAP UPPER DEPENDENT VARIABLE CP

| X/LB | 1.0180 | 1.0460 |
|---|---|---|
| PHI | | |
| .000 | -.3020 | -.2890 |
| 40.000 | -.3023 | -.3290 |

ALPHA ( 2) = .056 BETA ( 4) = 4.251 MACH = .59628 Q = 593.97 P = 2386.4 RN/L = 4.8452

SECTION ( 1)BODY FLAP UPPER DEPENDENT VARIABLE CP

| X/LB | 1.0180 | 1.0460 |
|---|---|---|
| PHI | | |
| .000 | -.3046 | -.2996 |
| 40.000 | -.3107 | -.3322 |

AMES 11-073(OA148) -140A/B/C CRB BODY FLAP UP (XEBF7D)

ALPHA ( 2) = .051 BETA ( 5) = 6.305 MACH = .59628 Q = 593.97 P = 2385.4 RN/L = 4.8452

SECTION ( 1)BODY FLAP UPPER DEPENDENT VARIABLE CP

| X/LB | 1.0180 | 1.0460 |
|---|---|---|
| PHI | | |
| .000 | -.3122 | -.3221 |
| 40.000 | -.3117 | -.3197 |

ALPHA ( 3) = 4.000 BETA ( 1) = -7.898 MACH = .59578 Q = 593.03 P = 2386.8 RN/L = 4.8456

SECTION ( 1)BODY FLAP UPPER DEPENDENT VARIABLE CP

| X/LB | 1.0180 | 1.0460 |
|---|---|---|
| PHI | | |
| .000 | -.3203 | -.3257 |
| 40.000 | -.3276 | -.3416 |

ALPHA ( 3) = 4.002 BETA ( 2) = -3.661 MACH = .59578 Q = 593.03 P = 2386.8 RN/L = 4.8455

SECTION ( 1)BODY FLAP UPPER DEPENDENT VARIABLE CP

| X/LB | 1.0180 | 1.0460 |
|---|---|---|
| PHI | | |
| .000 | -.3131 | -.3015 |
| 40.000 | -.3087 | -.3308 |

ALPHA ( 3) = 4.000 BETA ( 3) = .182 MACH = .59578 Q = 593.03 P = 2386.8 RN/L = 4.8456

SECTION ( 1)BODY FLAP UPPER DEPENDENT VARIABLE CP

| X/LB | 1.0180 | 1.0460 |
|---|---|---|
| PHI | | |
| .000 | -.3031 | -.2975 |
| 40.000 | -.2958 | -.3188 |

ALPHA ( 3) = 4.003 BETA ( 4) = 4.239 MACH = .59578 Q = 593.03 P = 2386.8 RN/L = 4.8456

SECTION ( 1)BODY FLAP UPPER DEPENDENT VARIABLE CP

| X/LB | 1.0180 | 1.0460 |
|---|---|---|
| PHI | | |
| .000 | -.3068 | -.3063 |
| 40.000 | -.3040 | -.3241 |

AMES 11-073(OA148) -140A/B/C ORB BODY FLAP UP (XEBFTD)

ALPHA ( 3) = 4.039 BETA ( 5) = 8.292 MACH = .59578 Q = 593.03 P = 2386.8 RN/L = 4.8455

SECTION 1:BODY FLAP UPPER DEPENDENT VARIABLE CP

| X/LB | 1.0160 | 1.0460 |
|---|---|---|
| PHI | | |
| .000 | -.3194 | -.3234 |
| 40.000 | -.2931 | -.3065 |

ALPHA ( 4) = 7.945 BETA ( 1) = -7.990 MACH = .59630 Q = 593.97 P = 2386.4 RN/L = 4.8482

SECTION ( 1:BODY FLAP UPPER DEPENDENT VARIABLE CP

| X/LB | 1.0180 | 1.0460 |
|---|---|---|
| PHI | | |
| .000 | -.3318 | -.3276 |
| 40.000 | -.3344 | -.3465 |

ALPHA ( 4) = 7.956 BETA ( 2) = -3.860 MACH = .59630 Q = 593.97 P = 2386.4 RN/L = 4.8482

SECTION ( 1:BODY FLAP UPPER DEPENDENT VARIABLE CP

| X/LB | 1.0190 | 1.0460 |
|---|---|---|
| PHI | | |
| .000 | -.3095 | -.3083 |
| 40.000 | -.3134 | -.3263 |

ALPHA ( 4) = 7.955 BETA ( 3) = .181 MACH = .59630 Q = 593.97 P = 2386.4 RN/L = 4.8482

SECTION ( 1:BODY FLAP UPPER DEPENDENT VARIABLE CP

| X/LB | 1.0180 | 1.0460 |
|---|---|---|
| PHI | | |
| .000 | -.2961 | -.2970 |
| 40.000 | -.2940 | -.2966 |

ALPHA ( 4) = 7.955 BETA ( 4) = 4.234 MACH = .59630 Q = 593.97 P = 2386.4 RN/L = 4.8482

SECTION ( 1:BODY FLAP UPPER DEPENDENT VARIABLE CP

| X/LB | 1.0180 | 1.0460 |
|---|---|---|
| PHI | | |
| .000 | -.3124 | -.3207 |
| 40.000 | -.2942 | -.3082 |

AMES 11-073(OA148) -140A/B/C CRB BODY FLAP UP (XE8F70)

ALPHA ( 4) = 7.954 BETA ( 5) = 8.280 MACH = .59630 Q = 593.97 P = 2386.4 RN/L = 4.8482

SECTION ( 1)BODY FLAP UPPER DEPENDENT VARIABLE CP

| X/LB | 1.0180 | 1.0460 |
|---|---|---|
| PHI | | |
| .000 | -.3305 | -.3399 |
| 40.000 | -.2904 | -.3056 |

ALPHA ( 5) = 11.925 BETA ( 1) = -7.848 MACH = .59584 Q = 593.15 P = 2386.7 RN/L = 4.8434

SECTION ( 1)BODY FLAP UPPER DEPENDENT VARIABLE CP

| X/LB | 1.0180 | 1.0460 |
|---|---|---|
| PHI | | |
| .000 | -.3153 | -.3255 |
| 40.000 | -.3255 | -.3548 |

ALPHA ( 5) = 11.942 BETA ( 2) = -3.851 MACH = .59584 Q = 593.15 P = 2386.7 RN/L = 4.8434

SECTION ( 1)BODY FLAP UPPER DEPENDENT VARIABLE CP

| X/LB | 1.0180 | 1.0460 |
|---|---|---|
| PHI | | |
| .000 | -.3049 | -.3082 |
| 40.000 | -.3127 | -.3272 |

ALPHA ( 5) = 11.947 BETA ( 3) = .182 MACH = .59584 Q = 593.15 P = 2386.7 RN/L = 4.8434

SECTION ( 1)BODY FLAP UPPER DEPENDENT VARIABLE CP

| X/LB | 1.0180 | 1.0460 |
|---|---|---|
| PHI | | |
| .000 | -.3040 | -.2997 |
| 40.000 | -.2905 | -.3125 |

ALPHA ( 5) = 11.942 BETA ( 4) = 4.245 MACH = .59584 Q = 593.15 P = 2386.7 RN/L = 4.8434

SECTION ( 1)BODY FLAP UPPER DEPENDENT VARIABLE CP

| X/LB | 1.0180 | 1.0460 |
|---|---|---|
| PHI | | |
| .000 | -.3070 | -.3198 |
| 40.000 | -.2751 | -.3051 |

AMES 11-073(OA148) -140A/B/C ORB BODY FLAP UP (XE8F70)

ALPHA ( 5) = 11.935 BETA ( 5) = 8.309 MACH = .59584 Q = 593.15 P = 2386.7 RN/L = 4.8434

SECTION ( 1)BODY FLAP UPPER DEPENDENT VARIABLE CP

| X/LB | 1.0180 | 1.0460 |
|---|---|---|
| PHI | | |
| .000 | -.3222 | -.3368 |
| 40.000 | -.2883 | -.3110 |

AMES 11-073(OA148) -140A/B/C ORB BODY FLAP UP (XE8F71) ( 05 AUG 75 )

REFERENCE DATA

SREF = 2690.0000 SQ.FT. XMRP = 1076.6800 IN. XO
LREF = 474.8000 IN. YMRP = .0000 IN. YO
BREF = 936.0680 IN. ZMRP = 375.0000 IN. ZO
SCALE = .0300

PARAMETRIC DATA

RUDDER = -5.000 SPDBRK = 55.000
BDFLAP = 16.300 L-ELVN = -10.000
R-ELVN = -10.000 MACH = 1.400

ALPHA ( 1) = -3.946 BETA ( 1) = -3.857 MACH = 1.3971 Q = 600.47 P = 439.47 RN/L = 2.9096

SECTION ( 1)BODY FLAP UPPER DEPENDENT VARIABLE CP

| X/LB | 1.0180 | 1.0460 |
|---|---|---|
| PHI | | |
| .000 | -.3512 | -.3382 |
| 40.000 | -.3650 | -.3745 |

ALPHA ( 1) = -3.940 BETA ( 2) = .190 MACH = 1.3971 Q = 600.47 P = 439.47 RN/L = 2.9096

SECTION ( 1)BODY FLAP UPPER DEPENDENT VARIABLE CP

| X/LB | 1.0180 | 1.0460 |
|---|---|---|
| PHI | | |
| .000 | -.3421 | -.3328 |
| 40.000 | -.3594 | -.3549 |

ALPHA ( 1) = -3.946 BETA ( 3) = 4.272 MACH = 1.3971 Q = 600.47 P = 439.47 RN/L = 2.9096

SECTION ( 1)BODY FLAP UPPER DEPENDENT VARIABLE CP

| X/LB | 1.0180 | 1.0460 |
|---|---|---|
| PHI | | |
| .000 | -.3410 | -.3394 |
| 40.000 | -.3444 | -.3391 |

ALPHA ( 1) = .015 BETA ( 1) = -3.873 MACH = 1.3971 Q = 600.47 P = 439.47 RN/L = 2.9088

SECTION ( 1)BODY FLAP UPPER DEPENDENT VARIABLE CP

| X/LB | 1.0180 | 1.0460 |
|---|---|---|
| PHI | | |
| .000 | -.3550 | -.3429 |
| 40.000 | -.3811 | -.3990 |

AMES 11-073(OA148) -140A/B/C ORB BODY FLAP UP (XEBF71)

ALPHA ( 2) = .022 BETA ( 2) = .180 MACH = 1.3971 Q = 600.47 P = 439.47 RN/L = 2.9088

SECTION ( 1)BODY FLAP UPPER DEPENDENT VARIABLE CP

| X/LB | 1.0180 | 1.0460 |
|---|---|---|
| PHI | | |
| .000 | -.3451 | -.3363 |
| 40.000 | -.3696 | -.3711 |

ALPHA ( 2) = .018 BETA ( 3) = 4.248 MACH = 1.3971 Q = 600.47 P = 439.47 RN/L = 2.9088

SECTION ( 1)BODY FLAP UPPER DEPENDENT VARIABLE CP

| X/LB | 1.0180 | 1.0460 |
|---|---|---|
| PHI | | |
| .000 | -.3565 | -.3598 |
| 40.000 | -.3610 | -.3603 |

ALPHA ( 3) = 3.951 BETA ( 1) = -3.877 MACH = 1.3961 Q = 600.56 P = 440.18 RN/L = 2.9092

SECTION ( 1)BODY FLAP UPPER DEPENDENT VARIABLE CP

| X/LB | 1.0180 | 1.0460 |
|---|---|---|
| PHI | | |
| .000 | -.3565 | -.3421 |
| 40.000 | -.3827 | -.3889 |

ALPHA ( 3) = 3.952 BETA ( 2) = .179 MACH = 1.3961 Q = 600.56 P = 440.18 RN/L = 2.9092

SECTION ( 1)BODY FLAP UPPER DEPENDENT VARIABLE CP

| X/LB | 1.0180 | 1.0460 |
|---|---|---|
| PHI | | |
| .000 | -.3499 | -.3387 |
| 40.000 | -.3706 | -.3770 |

ALPHA ( 3) = 3.956 BETA ( 3) = 4.242 MACH = 1.3961 Q = 600.56 P = 440.18 RN/L = 2.9092

SECTION ( 1)BODY FLAP UPPER DEPENDENT VARIABLE CP

| X/LB | 1.0180 | 1.0460 |
|---|---|---|
| PHI | | |
| .000 | -.3641 | -.3662 |
| 40.000 | -.3674 | -.3679 |

AMES 11-073(OA148) -140A/B/C ORB BODY FLAP UP (XE8F71)

ALPHA ( 4) = 7.937 BETA ( 1) = -3.873 MACH = 1.3969 Q = 600.27 P = 439.47 RN/L = 2.9090

SECTION ( 1)BODY FLAP UPPER DEPENDENT VARIABLE CP

| X/LB | 1.0180 | 1.0460 |
|---|---|---|
| PHI | | |
| .000 | -.3609 | -.3488 |
| 40.000 | -.3862 | -.3979 |

ALPHA ( 4) = 7.995 BETA ( 2) = .177 MACH = 1.3969 Q = 600.27 P = 439.47 RN/L = 2.9090

SECTION ( 1)BODY FLAP UPPER DEPENDENT VARIABLE CP

| X/LB | 1.0180 | 1.0460 |
|---|---|---|
| PHI | | |
| .000 | -.3620 | -.3513 |
| 40.000 | -.3841 | -.3977 |

ALPHA ( 4) = 7.892 BETA ( 3) = 4.237 MACH = 1.3969 Q = 600.27 P = 439.47 RN/L = 2.9090

SECTION ( 1)BODY FLAP UPPER DEPENDENT VARIABLE CP

| X/LB | 1.0180 | 1.0460 |
|---|---|---|
| PHI | | |
| .000 | -.3655 | -.3641 |
| 40.000 | -.3765 | -.3785 |

ALPHA ( 5) = 11.960 BETA ( 1) = -3.861 MACH = 1.3964 Q = 600.16 P = 439.71 RN/L = 2.9137

SECTION ( 1)BODY FLAP UPPER DEPENDENT VARIABLE CP

| X/LB | 1.0180 | 1.0460 |
|---|---|---|
| PHI | | |
| .000 | -.3721 | -.3690 |
| 40.000 | -.3754 | -.3995 |

ALPHA ( 5) = 11.969 BETA ( 2) = .177 MACH = 1.3964 Q = 600.16 P = 439.71 RN/L = 2.9137

SECTION ( 1)BODY FLAP UPPER DEPENDENT VARIABLE CP

| X/LB | 1.0180 | 1.0460 |
|---|---|---|
| PHI | | |
| .000 | -.3545 | -.3485 |
| 40.000 | -.3721 | -.3961 |

AMES 11-073(OA148) -140A/B/C ORB BODY FLAP UP (XE8F71)

ALPHA ( 5) = 11.967 BETA ( 3) = 4.251 MACH = 1.3964 Q = 600.16 P = 439.71 RN/L = 2.9137

SECTION ( 1)BODY FLAP UPPER DEPENDENT VARIABLE CP

| X/LB | 1.0180 | 1.0460 |
|---|---|---|
| PHI | | |
| .000 | -.3623 | -.3497 |
| 40.000 | -.3909 | -.3981 |

ALPHA ( 6) = 15.903 BETA ( 1) = -3.840 MACH = 1.3960 Q = 600.45 P = 440.18 RN/L = 2.9185

SECTION ( 1)BODY FLAP UPPER DEPENDENT VARIABLE CP

| X/LB | 1.0180 | 1.0460 |
|---|---|---|
| PHI | | |
| .000 | -.3614 | -.3536 |
| 40.000 | -.3798 | -.4071 |

ALPHA ( 6) = 15.917 BETA ( 2) = .180 MACH = 1.3960 Q = 600.45 P = 440.18 RN/L = 2.9185

SECTION ( 1)BODY FLAP UPPER DEPENDENT VARIABLE CP

| X/LB | 1.0180 | 1.0460 |
|---|---|---|
| PHI | | |
| .000 | -.3717 | -.3593 |
| 40.000 | -.3945 | -.4162 |

ALPHA ( 6) = 15.910 BETA ( 3) = 4.280 MACH = 1.3960 Q = 600.45 P = 440.18 RN/L = 2.9185

SECTION ( 1)BODY FLAP UPPER DEPENDENT VARIABLE CP

| X/LB | 1.0180 | 1.0460 |
|---|---|---|
| PHI | | |
| .000 | -.3597 | -.3542 |
| 40.000 | -.3919 | -.4114 |

AMES 11-073(OA148) -140A/B/C CRB BODY FLAP UP (XE8F72) ( 05 AUG 75 )

REFERENCE DATA

SREF = 2690.0000 SQ.FT. XMRP = 1076.6800 IN. XO
LREF = 474.8000 IN. YMRP = .0000 IN. YO
BREF = 935.0680 IN. ZMRP = 375.0000 IN. ZO
SCALE = .0300

PARAMETRIC DATA

RUDDER = -5.000 SPDBRK = 55.000
BDFLAP = 16.300 L-ELVN = -10.000
R-ELVN = -10.000 MACH = 1.250

ALPHA ( 1) = -3.944 BETA ( 1) = -3.854 MACH = 1.2471 Q = 599.40 P = 550.63 RN/L = 3.0068

SECTION ( 1)BODY FLAP UPPER DEPENDENT VARIABLE CP

| X/LB | 1.0180 | 1.0460 |
|---|---|---|
| PHI | | |
| .000 | -.3835 | -.3752 |
| 40.000 | -.4100 | -.4181 |

ALPHA ( 1) = -3.937 BETA ( 2) = .190 MACH = 1.2471 Q = 599.40 P = 550.63 RN/L = 3.0068

SECTION ( 1)BODY FLAP UPPER DEPENDENT VARIABLE CP

| X/LB | 1.0180 | 1.0460 |
|---|---|---|
| PHI | | |
| .000 | -.3706 | -.3589 |
| 40.000 | -.3925 | -.3892 |

ALPHA ( 1) = -3.943 BETA ( 3) = 4.266 MACH = 1.2471 Q = 599.40 P = 550.63 RN/L = 3.0068

SECTION ( 1)BODY FLAP UPPER DEPENDENT VARIABLE CP

| X/LB | 1.0180 | 1.0460 |
|---|---|---|
| PHI | | |
| .000 | -.3844 | -.3882 |
| 40.000 | -.3930 | -.3777 |

ALPHA ( 2) = .045 BETA ( 1) = -3.865 MACH = 1.2470 Q = 599.89 P = 551.11 RN/L = 3.0108

SECTION ( 1)BODY FLAP UPPER DEPENDENT VARIABLE CP

| X/LB | 1.0180 | 1.0460 |
|---|---|---|
| PHI | | |
| .000 | -.3909 | -.3842 |
| 40.000 | -.4211 | -.4266 |

AMES 11-073(OA148) -140A/B/C CRB BODY FLAP UP (XE8F72)

ALPHA ( 2) = .050 BETA ( 2) = .176 MACH = 1.2470 Q = 599.89 P = 551.11 RN/L = 3.0108

SECTION ( 1)BODY FLAP UPPER DEPENDENT VARIABLE CP

| X/LB | 1.0180 | 1.0460 |
|---|---|---|
| PHI | | |
| .000 | -.3856 | -.3795 |
| 40.000 | -.4102 | -.4088 |

ALPHA ( 2) = .045 BETA ( 3) = 4.247 MACH = 1.2470 Q = 599.89 P = 551.11 RN/L = 3.0108

SECTION ( 1)BODY FLAP UPPER DEPENDENT VARIABLE CP

| X/LB | 1.0180 | 1.0460 |
|---|---|---|
| PHI | | |
| .000 | -.3942 | -.4028 |
| 40.000 | -.3935 | -.3847 |

ALPHA ( 3) = 3.983 BETA ( 1) = -3.876 MACH = 1.2481 Q = 600.17 P = 550.40 RN/L = 3.0062

SECTION ( 1)BODY FLAP UPPER DEPENDENT VARIABLE CP

| X/LB | 1.0180 | 1.0460 |
|---|---|---|
| PHI | | |
| .000 | -.3983 | -.3876 |
| 40.000 | -.4229 | -.4263 |

ALPHA ( 3) = 3.983 BETA ( 2) = .181 MACH = 1.2481 Q = 600.17 P = 550.40 RN/L = 3.0062

SECTION ( 1)BODY FLAP UPPER DEPENDENT VARIABLE CP

| X/LB | 1.0180 | 1.0460 |
|---|---|---|
| PHI | | |
| .000 | -.3982 | -.3997 |
| 40.000 | -.4239 | -.4261 |

ALPHA ( 3) = 3.984 BETA ( 3) = 4.240 MACH = 1.2481 Q = 600.17 P = 550.40 RN/L = 3.0062

SECTION ( 1)BODY FLAP UPPER DEPENDENT VARIABLE CP

| X/LB | 1.0180 | 1.0460 |
|---|---|---|
| PHI | | |
| .000 | -.4023 | -.4071 |
| 40.000 | -.4033 | -.3992 |

AMES 11-073(OA148) -140A/B/C ORB BODY FLAP UP (XE8F72)

ALPHA ( 4) = 7.933 BETA ( 1) = -3.872 MACH = 1.2470 Q = 599.90 P = 551.11 RN/L = 3.0127

SECTION ( 1)BODY FLAP UPPER DEPENDENT VARIABLE CP

| X/LB | 1.0180 | 1.0460 |
|---|---|---|
| PHI | | |
| .000 | -.4132 | -.4005 |
| 40.000 | -.4347 | -.4365 |

ALPHA ( 4) = 7.940 BETA ( 2) = .173 MACH = 1.2470 Q = 599.90 P = 551.11 RN/L = 3.0127

SECTION ( 1)BODY FLAP UPPER DEPENDENT VARIABLE CP

| X/LB | 1.0180 | 1.0460 |
|---|---|---|
| PHI | | |
| .000 | -.4133 | -.4075 |
| 40.000 | -.4365 | -.4405 |

ALPHA ( 4) = 7.943 BETA ( 3) = 4.236 MACH = 1.2470 Q = 599.90 P = 551.11 RN/L = 3.0127

SECTION ( 1)BODY FLAP UPPER DEPENDENT VARIABLE CP

| X/LB | 1.0180 | 1.0460 |
|---|---|---|
| PHI | | |
| .000 | -.4167 | -.4157 |
| 40.000 | -.4238 | -.4282 |

ALPHA ( 5) = 12.023 BETA ( 1) = -3.855 MACH = 1.2460 Q = 599.73 P = 551.81 RN/L = 3.0130

SECTION ( 1)BODY FLAP UPPER DEPENDENT VARIABLE CP

| X/LB | 1.0180 | 1.0460 |
|---|---|---|
| PHI | | |
| .000 | -.4215 | -.4113 |
| 40.000 | -.4459 | -.4556 |

ALPHA ( 5) = 12.037 BETA ( 2) = .182 MACH = 1.2460 Q = 599.73 P = 551.81 RN/L = 3.0130

SECTION ( 1)BODY FLAP UPPER DEPENDENT VARIABLE CP

| X/LB | 1.0180 | 1.0460 |
|---|---|---|
| PHI | | |
| .000 | -.4113 | -.4034 |
| 40.000 | -.4283 | -.4414 |

ORIGINAL PAGE IS
OF POOR QUALITY

AMES 11-073(OA148) -140A/B/C ORB BODY FLAP UP (XEBF72)

ALPHA ( 5) = 12.032 BETA ( 3) = 4.249 MACH = 1.2460 Q = 599.73 P = 551.81 RN/L = 3.0130

SECTION ( 1)BOD FLAP UPPER DEPENDENT VARIABLE CP

| X/LB | 1.0180 | 1.0460 |
|---|---|---|
| PHI | | |
| .000 | -.4118 | -.4094 |
| 40.000 | -.4352 | -.4453 |

AMES 11-073(OA148) -140A/B/C CRB BODY FLAP UP (XEBF73) ( 05 AUG 75 )

REFERENCE DATA

SREF = 2890.0000 SQ.FT. XMRP = 1076.6800 IN. XO
LREF = 474.6000 IN. YMRP = .0000 IN. YO
BREF = 936.0000 IN. ZMRP = 375.0000 IN. ZO
SCALE = .0300

PARAMETRIC DATA

RUDDER = -5.000 SPDBRK = 65.000
BDFLAP = 16.300 L-ELVN = -10.000
R-ELVN = -10.000 MACH = 1.100

ALPHA ( 1) = -3.958 BETA ( 1) = -3.850 MACH = 1.1008 Q = 600.53 P = 707.91 RN/L = 3.1821

SECTION ( 1)BODY FLAP UPPER DEPENDENT VARIABLE CP

| X/LB | 1.0180 | 1.0460 |
|---|---|---|
| PHI | | |
| .000 | -.4194 | -.4130 |
| 40.000 | -.4273 | -.4397 |

ALPHA ( 1) = -3.953 BETA ( 2) = .190 MACH = 1.1008 Q = 600.53 P = 707.91 RN/L = 3.1821

SECTION ( 1)BODY FLAP UPPER DEPENDENT VARIABLE CP

| X/LB | 1.0180 | 1.0460 |
|---|---|---|
| PHI | | |
| .000 | -.3974 | -.3948 |
| 40.000 | -.3872 | -.3886 |

ALPHA ( 1) = -3.960 BETA ( 3) = 4.256 MACH = 1.1008 Q = 600.53 P = 707.91 RN/L = 3.1821

SECTION ( 1)BODY FLAP UPPER DEPENDENT VARIABLE CP

| X/LB | 1.0180 | 1.0460 |
|---|---|---|
| PHI | | |
| .000 | -.4324 | -.4300 |
| 40.000 | -.3957 | -.3952 |

ALPHA ( 2) = .047 BETA ( 1) = -3.869 MACH = 1.1000 Q = 599.94 P = 708.37 RN/L = 3.1830

SECTION ( 1)BODY FLAP UPPER DEPENDENT VARIABLE CP

| X/LB | 1.0180 | 1.0460 |
|---|---|---|
| PHI | | |
| .000 | -.4240 | -.4218 |
| 40.000 | -.4309 | -.4433 |

AMES 11-073(OA148) -140A/B/C ORB BODY FLAP UP (XEBF73)

ALPHA ( 2) = .052 BETA ( 2) = .177 MACH = 1.1000 Q = 599.94 P = 708.37 RN/L = 3.1830

SECTION ( 1)BODY FLAP UPPER DEPENDENT VARIABLE CP

| X/LB | 1.0180 | 1.0460 |
|---|---|---|
| PHI | | |
| .000 | -.4060 | -.4036 |
| 40.000 | -.4153 | -.4175 |

ALPHA ( 2) = .046 BETA ( 3) = 4.245 MACH = 1.1000 Q = 599.94 P = 708.37 RN/L = 3.1830

SECTION ( 1)BODY FLAP UPPER DEPENDENT VARIABLE CP

| X/LB | 1.0180 | 1.0460 |
|---|---|---|
| PHI | | |
| .000 | -.4329 | -.4293 |
| 40.000 | -.3891 | -.3934 |

ALPHA ( 3) = 4.012 BETA ( 1) = -3.872 MACH = 1.0998 Q = 599.99 P = 708.60 RN/L = 3.1803

SECTION ( 1)BODY FLAP UPPER DEPENDENT VARIABLE CP

| X/LB | 1.0180 | 1.0460 |
|---|---|---|
| PHI | | |
| .000 | -.4333 | -.4293 |
| 40.000 | -.4407 | -.4495 |

ALPHA ( 3) = 4.014 BETA ( 2) = .182 MACH = 1.0998 Q = 599.99 P = 708.60 RN/L = 3.1803

SECTION ( 1)BODY FLAP UPPER DEPENDENT VARIABLE CP

| X/LB | 1.0180 | 1.0460 |
|---|---|---|
| PHI | | |
| .000 | -.4211 | -.4204 |
| 40.000 | -.4402 | -.4413 |

ALPHA ( 3) = 4.006 BETA ( 3) = 4.238 MACH = 1.0998 Q = 599.99 P = 708.60 RN/L = 3.1803

SECTION ( 1)BODY FLAP UPPER DEPENDENT VARIABLE CP

| X/LB | 1.0180 | 1.0460 |
|---|---|---|
| PHI | | |
| .000 | -.4402 | -.4485 |
| 40.000 | -.4013 | -.4149 |

AMES 11-073(CA148) -140A/B/C ORB BODY FLAP UP (XE9773)

ALPHA ( 4) = 7.978 BETA ( 1) = -3.868 MACH = 1.1000 Q = 599.94 P = 708.36 RN/L = 3.1794

SECTION ( 1)BODY FLAP UPPER DEPENDENT VARIABLE CP

| X/LB | 1.0180 | 1.0460 |
|---|---|---|
| PHI | | |
| .000 | -.4562 | -.4528 |
| 40.000 | -.4836 | -.4767 |

ALPHA ( 4) = 7.984 BETA ( 2) = .174 MACH = 1.1000 Q = 599.94 P = 708.36 RN/L = 3.1794

SECTION ( 1)BODY FLAP UPPER DEPENDENT VARIABLE CP

| X/LB | 1.0180 | 1.0460 |
|---|---|---|
| PHI | | |
| .000 | -.4405 | -.4419 |
| 40.000 | -.4578 | -.4610 |

ALPHA ( 4) = 7.984 BETA ( 3) = 4.233 MACH = 1.1000 Q = 599.94 P = 708.36 RN/L = 3.1794

SECTION ( 1)BODY FLAP UPPER DEPENDENT VARIABLE CP

| X/LB | 1.0180 | 1.0460 |
|---|---|---|
| PHI | | |
| .000 | -.4581 | -.4697 |
| 40.000 | -.4836 | -.4893 |

ALPHA ( 5) = 12.067 BETA ( 1) = -3.848 MACH = 1.0997 Q = 599.64 P = 708.61 RN/L = 3.1785

SECTION ( 1)BODY FLAP UPPER DEPENDENT VARIABLE CP

| X/LB | 1.0180 | 1.0460 |
|---|---|---|
| PHI | | |
| .000 | -.4634 | -.4606 |
| 40.000 | -.4813 | -.4832 |

ALPHA ( 5) = 12.077 BETA ( 2) = .180 MACH = 1.0997 Q = 599.64 P = 708.61 RN/L = 3.1785

SECTION ( 1)BODY FLAP UPPER DEPENDENT VARIABLE CP

| X/LB | 1.0180 | 1.0460 |
|---|---|---|
| PHI | | |
| .000 | -.4471 | -.4456 |
| 40.000 | -.4709 | -.4812 |

AMES 11-073(OA148) -140A/9/C CRB BODY FLAP UP (XEB573)

ALPHA ( B) = 12.075 BETA ( 3) = 4.245 MACH = 1.0997 Q = 599.84 P = 709.61 RN/L = 3.1785

SECTION 1 BODY FLAP UPPER DEPENDENT VARIABLE CP

| X/LB | 1.0180 | 1.0460 |
|---|---|---|
| PHI | | |
| .000 | -.4866 | -.4759 |
| 40.000 | -.4692 | -.4783 |

AMES 11-0731OA1 ORB BODY FLAP UP (XE8F74) ( 05 AUG 75 )

REFERENCE DATA

SREF = 2690.0000 SQ.FT. XMRP = 1076.6800 IN. XO
LREF = 474.8000 IN. YMRP = .0000 IN. YO
HREF = 936.0680 IN. ZMRP = 375.0000 IN. ZO
SCALE = .0300

PARAMETRIC DATA

RUDDER = -5.000 SPDBRK = 55.000
BDFLAP = 16.300 L-ELVN = -10.000
R-ELVN = -10.000 MACH = .900

ALPHA ( 1) = -3.998 BETA ( 1) = -3.854 MACH = .90080 Q = 600.60 P = 1057.3 RN/L = 3.5738

SECTION ( 1)BODY FLAP UPPER DEPENDENT VARIABLE CP

| X/LB | 1.0180 | 1.0460 |
|---|---|---|
| PHI | | |
| .000 | -.2878 | -.2920 |
| 40.000 | -.3115 | -.3418 |

ALPHA ( 1) = -3.915 BETA ( 2) = .189 MACH = .90080 Q = 600.60 P = 1057.3 RN/L = 3.5738

SECTION ( 1)BODY FLAP UPPER DEPENDENT VARIABLE CP

| X/LB | 1.0180 | 1.0460 |
|---|---|---|
| PHI | | |
| .000 | -.2971 | -.3092 |
| 40.000 | -.3012 | -.3161 |

ALPHA ( 1) = -3.951 BETA ( 3) = 4.266 MACH = .90080 Q = 600.60 P = 1057.3 RN/L = 3.5738

SECTION ( 1)BODY FLAP UPPER DEPENDENT VARIABLE CP

| X/LB | 1.0180 | 1.0460 |
|---|---|---|
| PHI | | |
| .000 | -.3225 | -.0329 |
| 40.000 | -.2761 | -.2910 |

ALPHA ( 2) = .055 BETA ( 1) = -3.868 MACH = .90127 Q = 600.67 P = 1056.4 RN/L = 3.5726

SECTION ( 1)BODY FLAP UPPER DEPENDENT VARIABLE CP

| X/LB | 1.0180 | 1.0460 |
|---|---|---|
| PHI | | |
| .000 | -.2915 | -.2860 |
| 40.000 | -.3069 | -.3259 |

AMES 11-073(OA148) -140A/B/C ORB BODY FLAP UP (XE8F74) !E

ALPHA ( 2 = .084 BETA ( 2) = .180 MACH = .90127 Q = 600.67 P = 1056.4 RN/L = 3.5726

SECTION ( 1)BODY FLAP UPPER DEPENDENT VARIABLE CP

| X/LB | 1.0180 | 1.0460 |
|---|---|---|
| PHI | | |
| .000 | -.2915 | -.3040 |
| 40.000 | -.2971 | -.3102 |

ALPHA ( 2) = .055 BETA ( 3) = 4.248 MACH = .90127 Q = 600.67 P = 1056.4 RN/L = 3.5726

SECTION ( 1)BODY FLAP UPPER DEPENDENT VARIABLE CP

| X/LB | 1.0180 | 1.0460 |
|---|---|---|
| PHI | | |
| .000 | -.3071 | -.3171 |
| 40.000 | -.2818 | -.2941 |

ALPHA ( 3) = 4.001 BETA ( 1) = -3.875 MACH = .90140 Q = 601.01 P = 1056.6 RN/L = 3.5771

SECTION ( 1)BODY FLAP UPPER DEPENDENT VARIABLE CP

| X/LB | 1.0180 | 1.0460 |
|---|---|---|
| PHI | | |
| .000 | -.2949 | -.2973 |
| 40.000 | -.3025 | -.3234 |

ALPHA ( 3) = 4.079 BETA ( 2) = .183 MACH = .90140 Q = 601.01 P = 1056.6 RN/L = 3.5771

SECTION ( 1)BODY FLAP UPPER DEPENDENT VARIABLE CP

| X/LB | 1.0180 | 1.0460 |
|---|---|---|
| PHI | | |
| .000 | -.2927 | -.2979 |
| 40.000 | -.2974 | -.3104 |

ALPHA ( 3) = 4.001 BETA ( 3) = 4.242 MACH = .90140 Q = 601.01 P = 1056.6 RN/L = 3.5771

SECTION ( 1)BODY FLAP UPPER DEPENDENT VARIABLE CP

| X/LB | 1.0180 | 1.0460 |
|---|---|---|
| PHI | | |
| .000 | -.3065 | -.3210 |
| 40.000 | -.2755 | -.2907 |

AMES 11-073(OA148) -140A/B/C ORB BODY FLAP UP (XE8F74)

ALPHA ( 4) = 7.933 BETA ( 1) = -3.872 MACH = .90130 Q = 600.85 P = 1056.6 RN/L = 3.5771

SECTION ( 1)BODY FLAP UPPER DEPENDENT VARIABLE CP

| X/LB | 1.0180 | 1.0460 |
|---|---|---|
| PHI | | |
| .000 | -.2886 | -.2971 |
| 40.000 | -.2959 | -.3218 |

ALPHA ( 4) = 8.028 BETA ( 2) = .177 MACH = .90130 Q = 600.85 P = 1056.6 RN/L = 3.5771

SECTION ( 1)BODY FLAP UPPER DEPENDENT VARIABLE CP

| X/LB | 1.0180 | 1.0460 |
|---|---|---|
| PHI | | |
| .000 | -.2795 | -.2947 |
| 40.000 | -.2800 | -.2969 |

ALPHA ( 4) = 8.031 BETA ( 3) = 4.235 MACH = .90130 Q = 600.85 P = 1056.6 RN/L = 3.5771

SECTION ( 1)BODY FLAP UPPER DEPENDENT VARIABLE CP

| X/LB | 1.0180 | 1.0460 |
|---|---|---|
| PHI | | |
| .000 | -.2988 | -.3097 |
| 40.000 | -.2737 | -.2751 |

ALPHA ( 5) = 11.980 BETA ( 1) = -3.859 MACH = .90157 Q = 601.36 P = 1056.9 RN/L = 3.5829

SECTION ( 1)BODY FLAP UPPER DEPENDENT VARIABLE CP

| X/LB | 1.0180 | 1.0460 |
|---|---|---|
| PHI | | |
| .000 | -.2705 | -.2845 |
| 40.000 | -.2971 | -.3198 |

ALPHA ( 5) = 12.020 BETA ( 2) = .183 MACH = .90157 Q = 601.36 P = 1056.9 RN/L = 3.5829

SECTION ( 1)BODY FLAP UPPER DEPENDENT VARIABLE CP

| X/LB | 1.0190 | 1.0460 |
|---|---|---|
| PHI | | |
| .000 | -.2686 | -.2757 |
| 40.000 | -.2778 | -.2953 |

ORIGINAL PAGE IS
OF POOR QUALITY

AMES 11-073(OA148) -140A/B/C ORB BODY FLAP UP (XEBF74)

ALPHA ( 5) = 12.054 BETA ( 3) = 4.256 MACH = .90157 Q = 601.36 P = 1056.9 RN/L = 3.5229

SECTION ( 1)BODY FLAP UPPER DEPENDENT VARIABLE CP

| X/LB | 1.0180 | 1.0460 |
|---|---|---|
| PHI | | |
| .000 | -.2852 | -.3044 |
| 40.000 | -.2601 | -.2852 |

DATE 13 FEB 76 TABULATED PRESSURE DATA - OA148 ( AMES 11-073-1 )

AMES 11-073(OA148) -140A/B/C ORB BODY FLAP UP (XE8F75) ( 05 AUG 75 )

REFERENCE DATA

SREF = 2690.0000 SQ.FT. XMRP = 1076.6800 IN. XO
LREF = 474.8000 IN. YMRP = .0000 IN. YO
BREF = 936.0680 IN. ZMRP = 375.0000 IN. ZO
SCALE = .0300

PARAMETRIC DATA

RUDDER = -5.000 SPDBRK = 55.000
BDFLAP = 16.300 L-ELVN = -10.000
R-ELVN = -10.000 MACH = .600

ALPHA ( 1) = -3.999 BETA ( 1) = -7.854 MACH = .53648 Q = 594.32 P = 2386.4 RN/L = 4.8576

SECTION ( 1)BODY FLAP UPPER DEPENDENT VARIABLE CP

| X/LB | 1.0180 | 1.0460 |
|---|---|---|
| PHI | | |
| .000 | -.2796 | -.2782 |
| 40.000 | -.3027 | -.3227 |

ALPHA ( 1) = -3.939 BETA ( 2) = -3.848 MACH = .59648 Q = 594.32 P = 2386.4 RN/L = 4.8576

SECTION ( 1)BODY FLAP UPPER DEPENDENT VARIABLE CP

| X/LB | 1.0180 | 1.0460 |
|---|---|---|
| PHI | | |
| .000 | -.2697 | -.2556 |
| 40.000 | -.3030 | -.3295 |

ALPHA ( 1) = -3.938 BETA ( 3) = .187 MACH = .59648 Q = 594.32 P = 2386.4 RN/L = 4.8576

SECTION ( 1)BODY FLAP UPPER DEPENDENT VARIABLE CP

| X/LB | 1.0180 | 1.0460 |
|---|---|---|
| PHI | | |
| .000 | -.2667 | -.2646 |
| 40.000 | -.2816 | -.3099 |

ALPHA ( 1) = -3.926 BETA ( 4) = 4.266 MACH = .59648 Q = 594.32 P = 2386.4 RN/L = 4.8576

SECTION ( 1)BODY FLAP UPPER DEPENDENT VARIABLE CP

| X/LB | 1.0180 | 1.0460 |
|---|---|---|
| PHI | | |
| .000 | -.2806 | -.2860 |
| 40.000 | -.2794 | -.2942 |

AMES 11-073(OA148) -140A/B/C ORB BODY FLAP UP (XE8F75)

ALPHA ( 1) = -3.941 BETA ( 5) = 8.332 MACH = .59648 Q = 594.32 P = 2386.4 RN/L = 4.8576

SECTION ( 1)BODY FLAP UPPER DEPENDENT VARIABLE CP

| X/LB | 1.0180 | 1.0460 |
|---|---|---|
| PHI | | |
| .000 | -.2873 | -.3031 |
| 40.000 | -.2675 | -.2670 |

ALPHA ( 2) = .043 BETA ( 1) = -7.860 MACH = .59624 Q = 593.85 P = 2386.3 RN/L = 4.8579

SECTION ( 1)BODY FLAP UPPER DEPENDENT VARIABLE CP

| X/LB | 1.0180 | 1.0460 |
|---|---|---|
| PHI | | |
| .000 | -.2697 | -.2954 |
| 40.000 | -.3105 | -.3332 |

ALPHA ( 2) = .091 BETA ( 2) = -3.863 MACH = .59624 Q = 593.85 P = 2386.3 RN/L = 4.8579

SECTION ( 1)BODY FLAP UPPER DEPENDENT VARIABLE CP

| X/LB | 1.0180 | 1.0460 |
|---|---|---|
| PHI | | |
| .000 | -.2765 | -.2650 |
| 40.000 | -.2956 | -.3169 |

ALPHA ( 2) = .092 BETA ( 3) = .181 MACH = .59624 Q = 593.85 P = 2386.3 RN/L = 4.8579

SECTION ( 1)BODY FLAP UPPER DEPENDENT VARIABLE CP

| X/LB | 1.0180 | 1.0460 |
|---|---|---|
| PHI | | |
| .000 | -.2765 | -.2725 |
| 40.000 | -.2885 | -.3050 |

ALPHA ( 2) = .077 BETA ( 4) = 4.247 MACH = .59624 Q = 593.85 P = 2386.3 RN/L = 4.8579

SECTION ( 1)BODY FLAP UPPER DEPENDENT VARIABLE CP

| X/LB | 1.0180 | 1.0460 |
|---|---|---|
| PHI | | |
| .000 | -.2816 | -.2963 |
| 40.000 | -.2275 | -.2919 |

AMES 11-073(OA14B) -140A/B/C ORB BODY FLAP UP (XEBF75)

ALPHA ( 2) = .073 BETA ( 5) = 8.305 MACH = .59624 Q = 593.85 P = 2386.3 RN/L = 4.8579

SECTION ( 1)BODY FLAP UPPER DEPENDENT VARIABLE CP

| X/LB | 1.0180 | 1.0460 |
|---|---|---|
| PHI | | |
| .000 | -.2926 | -.3023 |
| 40.000 | -.2627 | -.2813 |

ALPHA ( 3) = 4.023 BETA ( 1) = -7.904 MACH = .59 0 Q = 594.21 P = 2386.5 RN/L = 4.8659

SECTION ( 1)BODY FLAP UPPER DEPENDENT VARIABLE CP

| X/LB | 1.0180 | 1.0460 |
|---|---|---|
| PHI | | |
| .000 | -.2916 | -.3008 |
| 40.000 | -.3077 | -.3303 |

ALPHA ( 3) = 4.026 BETA ( 2) = -3.864 MACH = .59640 Q = 594.21 P = 2386.5 RN/L = 4.8659

SECTION ( 1)BODY FLAP UPPER DEPENDENT VARIABLE CP

| X/LB | 1.0180 | 1.0460 |
|---|---|---|
| PHI | | |
| .000 | -.2819 | -.2790 |
| 40.000 | -.2974 | -.3245 |

ALPHA ( 3) = 4.153 BETA ( 3) = .177 MACH = .59640 Q = 594.21 P = 2386.5 RN/L = 4.8659

SECTION ( 1)BODY FLAP UPPER DEPENDENT VARIABLE CP

| X/LB | 1.0180 | 1.0460 |
|---|---|---|
| PHI | | |
| .000 | -.2654 | -.2694 |
| 40.000 | -.2791 | -.2939 |

ALPHA ( 3) = 4.012 BETA ( 4) = 4.240 MACH = .59640 Q = 594.21 P = 2386.5 RN/L = 4.8659

SECTION ( 1)BODY FLAP UPPER DEPENDENT VARIABLE CP

| X/LB | 1.0180 | 1.0460 |
|---|---|---|
| PHI | | |
| .000 | -.2884 | -.3073 |
| 40.000 | -.2790 | -.2835 |

ORIGINAL PAGE IS OF POOR QUALITY

DATE 13 FEB 76 TABULATED PRESSURE DATA - OA148 ( AMES 11-073-1 )

AMES 11-073(OA148) -140A/B/C ORB BODY FLAP UP (XE8F75)

ALPHA ( 3) = 4.017 BETA ( 5) = 8.288 MACH = .59640 Q = 594.21 P = 2386.5 RN/L = 4.8659

SECTION ( 1)BODY FLAP UPPER DEPENDENT VARIABLE CP

| X/LB | 1.0180 | 1.0460 |
|---|---|---|
| PHI | | |
| .000 | -.3035 | -.3065 |
| 40.000 | -.2504 | -.2804 |

ALPHA ( 4) = 7.959 BETA ( 1) = -7.893 MACH = .59626 Q = 593.97 P = 2386.7 RN/L = 4.8657

SECTION ( 1)BODY FLAP UPPER DEPENDENT VARIABLE CP

| X/LB | 1.0180 | 1.0460 |
|---|---|---|
| PHI | | |
| .000 | -.2930 | -.3020 |
| 40.000 | -.3128 | -.3397 |

ALPHA ( 4) = 7.971 BETA ( 2) = -3.863 MACH = .59626 Q = 593.97 P = 2386.7 RN/L = 4.8657

SECTION ( 1)BODY FLAP UPPER DEPENDENT VARIABLE CP

| X/LB | 1.0180 | 1.0460 |
|---|---|---|
| PHI | | |
| .000 | -.2774 | -.2774 |
| 40.000 | -.2930 | -.3218 |

ALPHA ( 4) = 8.077 BETA ( 3) = .178 MACH = .59626 Q = 593.97 P = 2386.7 RN/L = 4.8657

SECTION ( 1)BODY FLAP UPPER DEPENDENT VARIABLE CP

| X/LB | 1.0180 | 1.0460 |
|---|---|---|
| PHI | | |
| .000 | -.2697 | -.2733 |
| 40.000 | -.2747 | -.2905 |

ALPHA ( 4) = 8.079 BETA ( 4) = 4.235 MACH = .59626 Q = 593.97 P = 2386.7 RN/L = 4.8657

SECTION ( 1)BODY FLAP UPPER DEPENDENT VARIABLE CP

| X/LB | 1.0180 | 1.0460 |
|---|---|---|
| PHI | | |
| .000 | -.2916 | -.3041 |
| 40.000 | -.2527 | -.2829 |

AMES 11-073(OA148) -140A/B/C ORB BODY FLAP UP (XE8F75)

ALPHA ( 4) = 8.076 BETA ( 5) = 8.290 MACH = .59626 Q = 593.97 P = 2386.7 RN/L = 4.8657

SECTION ( 1)BODY FLAP UPPER DEPENDENT VARIABLE CP

| X/LB | 1.0180 | 1.0460 |
|---|---|---|
| PHI | | |
| .000 | -.3103 | -.3183 |
| 40.000 | -.2674 | -.2551 |

ALPHA ( 5) = 11.984 BETA ( 1) = -7.850 MACH = .59636 Q = 594.09 P = 2386.3 RN/L = 4.8671

SECTION ( 1)BODY FLAP UPPER DEPENDENT VARIABLE CP

| X/LB | 1.0180 | 1.0460 |
|---|---|---|
| PHI | | |
| .000 | -.2857 | -.2994 |
| 40.000 | -.3083 | -.3290 |

ALPHA ( 5) = 12.003 BETA ( 2) = -3.840 MACH = .59636 Q = 594.09 P = 2386.3 RN/L = 4.8671

SECTION ( 1)BODY FLAP UPPER DEPENDENT VARIABLE CP

| X/LB | 1.0180 | 1.0460 |
|---|---|---|
| PHI | | |
| .000 | -.2643 | -.2712 |
| 40.000 | -.2837 | -.3125 |

ALPHA ( 5) = 12.008 BETA ( 3) = .180 MACH = .59636 Q = 594.09 P = 2386.3 RN/L = 4.8671

SECTION ( 1)BODY FLAP UPPER DEPENDENT VARIABLE CP

| X/LB | 1.0180 | 1.0460 |
|---|---|---|
| PHI | | |
| .000 | -.2618 | -.2685 |
| 40.000 | -.2559 | -.2867 |

ALPHA ( 5) = 12.057 BETA ( 4) = 4.244 MACH = .59636 Q = 594.09 P = 2386.3 RN/L = 4.8671

SECTION ( 1)BODY FLAP UPPER DEPENDENT VARIABLE CP

| X/LB | 1.0180 | 1.0460 |
|---|---|---|
| PHI | | |
| .000 | -.2877 | -.3075 |
| 40.000 | -.2504 | -.2671 |

AMES 11-073(OA148) -140A/B/C ORB BODY FLAP UP (XEBF75)

ALPHA ( 5) = 12.114 BETA ( 5) = 8.307 MACH = .59636 Q = 594.09 P = 2386.3 RN/L = 4.8671

SECTION ( 1)BODY FLAP UPPER DEPENDENT VARIABLE CP

| X/LB | 1.0180 | 1.0460 |
|---|---|---|
| PHI | | |
| .000 | -.3109 | -.3237 |
| 40.000 | -.2623 | -.2623 |

AMES 11-073(OA148) -140A/B/C ORB BODY FLAP UP (XEBF76) ( 05 AUG 75 )

REFERENCE DATA

SREF = 2690.0000 SQ.FT. XMRP = 1076.6800 IN. XO
LREF = 474.8000 IN. YMRP = .0000 IN. YO
BREF = 936.0930 IN. ZMRP = 375.0000 IN. ZO
SCALE = .0300

PARAMETRIC DATA

RUDDER = -10.000 SPDBRK = .000
BDFLAP = -11.700 L-ELVN = 10.000
R-ELVN = -10.000 MACH = 1.400

ALPHA ( 1) = -4.004 BETA ( 1) = -3.853 MACH = 1.3930 Q = 598.57 P = 440.65 RN/L = 2.9057

SECTION ( 1)BODY FLAP UPPER DEPENDENT VARIABLE CP

| X/LB | 1.0180 | 1.0460 |
|---|---|---|
| PHI | | |
| .000 | -.3534 | -.3544 |
| 40.000 | -.3534 | -.3575 |

ALPHA ( 1) = -4.001 BETA ( 2) = .191 MACH = 1.3930 Q = 598.57 P = 440.65 RN/L = 2.9057

SECTION ( 1)BODY FLAP UPPER DEPENDENT VARIABLE CP

| X/LB | 1.0180 | 1.0460 |
|---|---|---|
| PHI | | |
| .000 | -.3511 | -.3580 |
| 40.000 | -.3461 | -.3564 |

ALPHA ( 1) = -3.983 BETA ( 3) = 4.275 MACH = 1.3930 Q = 598.57 P = 440.65 RN/L = 2.9057

SECTION ( 1)BODY FLAP UPPER DEPENDENT VARIABLE CP

| X/LB | 1.0180 | 1.0460 |
|---|---|---|
| PHI | | |
| .000 | -.3525 | -.3555 |
| 40.000 | -.3425 | -.3532 |

ALPHA ( 2) = .029 BETA ( 1) = -3.866 MACH = 1.3913 Q = 598.64 P = 441.83 RN/L = 2.9093

SECTION ( 1)BODY FLAP UPPER DEPENDENT VARIABLE CP

| X/LB | 1.0180 | 1.0460 |
|---|---|---|
| PHI | | |
| .000 | -.3359 | -.3520 |
| 40.000 | -.3542 | -.3546 |

ORIGINAL PAGE IS
OF POOR QUALITY

AMES 11-073(OA148) -140A/B/C ORB BODY FLAP UP (XEBF76)

ALPHA ( 2) = .033 BETA ( 2) = .181 MACH = 1.3913 Q = 598.64 P = 441.83 RN/L = 2.9093

SECTION ( 1)BODY FLAP UPPER DEPENDENT VARIABLE CP

| X/LB | 1.0180 | 1.0460 |
|---|---|---|
| PHI | | |
| .000 | -.3418 | -.3550 |
| 40.000 | -.3533 | -.3555 |

ALPHA ( 2) = .029 BETA ( 3) = 4.255 MACH = 1.3913 Q = 598.64 P = 441.83 RN/L = 2.9093

SECTION ( 1)BODY FLAP UPPER DEPENDENT VARIABLE CP

| X/LB | 1.0180 | 1.0460 |
|---|---|---|
| PHI | | |
| .000 | -.3516 | -.3593 |
| 40.000 | -.3538 | -.3595 |

ALPHA ( 3) = 3.951 BETA ( 1) = -3.871 MACH = 1.3919 Q = 599.88 P = 442.29 RN/L = 2.917[illegible]

SECTION ( 1)BODY FLAP UPPER DEPENDENT VARIABLE CP

| X/LB | 1.0180 | 1.0460 |
|---|---|---|
| PHI | | |
| .000 | -.3325 | -.3507 |
| 40.000 | -.3533 | -.3526 |

ALPHA ( 3) = 3.952 BETA ( 2) = .187 MACH = 1.3919 Q = 599.88 P = 442.29 RN/L = 2.917[illegible]

SECTION ( 1)BODY FLAP UPPER DEPENDENT VARIABLE CP

| X/LB | 1.0180 | 1.0460 |
|---|---|---|
| PHI | | |
| .000 | -.3387 | -.3452 |
| 40.000 | -.3426 | -.3443 |

ALPHA ( 3) = 3.953 BETA ( 3) = 4.246 MACH = 1.3919 Q = 599.88 P = 442.29 RN/L = 2.917[illegible]

SECTION ( 1)BODY FLAP UPPER DEPENDENT VARIABLE CP

| X/LB | 1.0180 | 1.0460 |
|---|---|---|
| PHI | | |
| .000 | -.3458 | -.3533 |
| 40.000 | -.3481 | -.3454 |

DATE 13 FEB 76 TABULATED PRESSURE DATA - OA148 ( AMES 11-073-1 )

AMES 11-073(OA148) -140A/B/C ORB BODY FLAP UP (XE8F75)

ALPHA ( 4) = 7.887 BETA ( 1) = -3.866 MACH = 1.3932 Q = 600.00 P = 441.59 RN/L = 2.9153

SECTION ( 1)BODY FLAP UPPER DEPENDENT VARIABLE CP

| X/LB | 1.0180 | 1.0460 |
|---|---|---|
| PHI | | |
| .000 | -.3357 | -.3485 |
| 40.000 | -.3495 | -.3513 |

ALPHA ( 4) = 7.964 BETA ( 2) = .189 MACH = 1.3932 Q = 600.00 P = 441.59 RN/L = 2.9153

SECTION ( 1)BODY FLAP UPPER DEPENDENT VARIABLE CP

| X/LB | 1.0180 | 1.0460 |
|---|---|---|
| PHI | | |
| .000 | -.3305 | -.3386 |
| 40.000 | -.3388 | -.3436 |

ALPHA ( 4) = 7.931 BETA ( 3) = 4.247 MACH = 1.3932 Q = 600.00 P = 441.59 RN/L = 2.9153

SECTION ( 1)BODY FLAP UPPER DEPENDENT VARIABLE CP

| X/LB | 1.0180 | 1.0460 |
|---|---|---|
| PHI | | |
| .000 | -.3482 | -.3563 |
| 40.000 | -.3575 | -.3637 |

ALPHA ( 5) = 11.871 BETA ( 1) = -3.849 MACH = 1.3930 Q = [illegible] P = 441.82 RN/L = 2.9227

SECTION ( 1)BODY FLAP UPPER DEPENDENT VARIABLE CP

| X/LB | 1.0180 | 1.0460 |
|---|---|---|
| PHI | | |
| .000 | -.3515 | -.3642 |
| 40.000 | -.3455 | -.3587 |

ALPHA ( 5) = 11.913 BETA ( 2) = .191 MACH = 1.3930 Q = 600.[illegible] P = 441.82 RN/L 2.9227

SECTION ( 1)BODY FLAP UPPER DEPENDENT VARIABLE CP

| X/LB | 1.0180 | 1.0460 |
|---|---|---|
| PHI | | |
| .000 | -.3470 | -.3566 |
| 40.000 | -.3499 | -.3638 |

AMES 11-073(OA148) -140A/B/C ORB BODY FLAP UP (XE8F76)

ALPHA ( 5) = 11.908 BETA ( 3) = 4.262 MACH = 1.3930 Q = 600.10 P = 441.82 RN/L = 2.9227

SECTION ( 1)BODY FLAP UPPER DEPENDENT VARIABLE CP

| X/LB | 1.0180 | 1.0460 |
|---|---|---|
| PHI | | |
| .000 | -.3466 | -.3592 |
| 40.000 | -.3652 | -.3686 |

ALPHA ( 6) = 15.905 BETA ( 1) = -3.830 MACH = 1.3921 Q = 600.28 P = 442.53 RN/L = 2.9208

SECTION ( 1)BODY FLAP UPPER DEPENDENT VARIABLE CP

| X/LB | 1.0180 | 1.0460 |
|---|---|---|
| PHI | | |
| .000 | -.3740 | -.3676 |
| 40.000 | -.3592 | -.3544 |

ALPHA ( 6) = 15.917 BETA ( 2) = .190 MACH = 1.3921 Q = 600.28 P = 442.53 RN/L = 2.9208

SECTION ( 1)BODY FLAP UPPER DEPENDENT VARIABLE CP

| X/LB | 1.0180 | 1.0460 |
|---|---|---|
| PHI | | |
| .000 | -.3682 | -.3783 |
| 40.000 | -.3843 | -.3945 |

ALPHA ( 6) = 15.907 BETA ( 3) = 4.290 MACH = 1.3921 Q = 600.28 P = 442.53 RN/L = 2.9208

SECTION ( 1)BODY FLAP UPPER DEPENDENT VARIABLE CP

| X/LB | 1.0180 | 1.0460 |
|---|---|---|
| PHI | | |
| .000 | -.3596 | -.3753 |
| 40.000 | -.3931 | -.3962 |

ORIGINAL PAGE IS
OF POOR QUALITY



AMES 11-073(OA148) -140A/B/C ORB BODY FLAP UP (XE8F77) ( 05 AUG 75 )

REFERENCE DATA

SREF = 2650.0000 SQ.FT. XMRP = 1076.6800 IN. XO
LREF = 474.8000 IN. YMRP = .0000 IN. YO
BREF = 936.0680 IN. ZMRP = 375.0000 IN. ZO
SCALE = .0300

PARAMETRIC DATA

RUDDER = -10.000 SPDBRK = .000
BDFLAP = -11.700 L-ELVN = 10.000
R-ELVN = -10.000 MACH = 1.250

ALPHA ( 1) = -4.016 BETA ( 1) = -3.849 MACH = 1.2454 Q = 599.63 P = 552.28 RN/L = 3.0204

SECTION ( 1)BODY FLAP UPPER DEPENDENT VARIABLE CP

| X/LB | 1.0180 | 1.0460 |
|---|---|---|
| PHI | | |
| .000 | -.3754 | -.3925 |
| 40.000 | -.3909 | -.3936 |

ALPHA ( 1) = -4.011 BETA ( 2) = .186 MACH = 1.2454 Q = 599.63 P = 552.28 RN/L = 3.0204

SECTION ( 1)BODY FLAP UPPER DEPENDENT VARIABLE CP

| X/LB | 1.0180 | 1.0460 |
|---|---|---|
| PHI | | |
| .000 | -.3728 | -.3894 |
| 40.000 | -.3886 | -.3918 |

ALPHA ( 1) = -4.020 BETA ( 3) = 4.275 MACH = 1.2454 Q = 599.63 P = 552.28 RN/L = 3.0204

SECTION ( 1)BODY FLAP UPPER DEPENDENT VARIABLE CP

| X/LB | 1.0180 | 1.0460 |
|---|---|---|
| PHI | | |
| .000 | -.3823 | -.3957 |
| 40.000 | -.3949 | -.3904 |

ALPHA ( 2) = .012 BETA ( 1) = -3.863 MACH = 1.2451 Q = 599.58 P = 552.51 RN/L = 3.0183

SECTION ( 1)BODY FLAP UPPER DEPENDENT VARIABLE CP

| X/LB | 1.0180 | 1.0460 |
|---|---|---|
| PHI | | |
| .000 | -.3687 | -.3835 |
| 40.000 | -.3804 | -.3819 |

AMES 11-073(OA148) -140A/B/C ORB BODY FLAP UP (XE8F77)

ALPHA ( 2) = .014 BETA ( 2) = .176 MACH = 1.2451 Q = 599.58 P = 552.51 RN/L = 3.0183

SECTION ( 1)BODY FLAP UPPER DEPENDENT VARIABLE CP

| X/LB | 1.0180 | 1.0450 |
|---|---|---|
| PHI | | |
| .000 | -.3675 | -.3850 |
| 40.000 | -.3795 | -.3855 |

ALPHA ( 2) = .026 BETA ( 3) = 4.255 MACH = 1.2451 Q = 599.58 P = 552.51 RN/L = 3.0183

SECTION ( 1)BODY FLAP UPPER DEPENDENT VARIABLE CP

| X/LB | 1.0180 | 1.0460 |
|---|---|---|
| PHI | | |
| .000 | -.3806 | -.3985 |
| 40.000 | -.3794 | -.3821 |

ALPHA ( 3) = 3.987 BETA ( 1) = -3.868 MACH = 1.2451 Q = 599.58 P = 552.51 RN/L = 3.0187

SECTION ( 1)BODY FLAP UPPER DEPENDENT VARIABLE CP

| X/LB | 1.0180 | 1.0460 |
|---|---|---|
| PHI | | |
| .000 | -.3658 | -.3780 |
| 40.000 | -.3751 | -.3749 |

ALPHA ( 3) = 3.988 BETA ( 2) = .182 MACH = 1.2451 Q = 599.58 P = 552.51 RN/L = 3.0187

SECTION ( 1)BODY FLAP UPPER DEPENDENT VARIABLE CP

| X/LB | 1.0180 | 1.0460 |
|---|---|---|
| PHI | | |
| .000 | -.3585 | -.3703 |
| 40.000 | -.3657 | -.3681 |

ALPHA ( 3) = 3.988 BETA ( 3) = 4.246 MACH = 1.2451 Q = 599.58 P = 552.51 RN/L = 3.0187

SECTION ( 1)BODY FLAP UPPER DEPENDENT VARIABLE CP

| X/LB | 1.0180 | 1.0460 |
|---|---|---|
| PHI | | |
| .000 | -.3804 | -.3976 |
| 40.000 | -.3823 | -.3956 |

AMES 11-073(OA148) -140A/B/C ORB BODY FLAP UP (XEBF77)

ALPHA ( 4) = 7.974 BETA ( 1) = -3.859 MACH = 1.2449 Q = 599.64 P = 552.75 RN/L = 3.0238

SECTION ( 1)BODY FLAP UPPER DEPENDENT VARIABLE CP

| X/LB | 1.0180 | 1.0460 |
|---|---|---|
| PHI | | |
| .000 | -.3644 | -.3818 |
| 40.000 | -.3762 | -.3818 |

ALPHA ( 4) = 7.979 BETA ( 2) = .184 MACH = 1.2449 Q = 599.64 P = 552.75 RN/L = 3.0238

SECTION ( 1)BODY FLAP UPPER DEPENDENT VARIABLE CP

| X/LB | 1.0180 | 1.0460 |
|---|---|---|
| PHI | | |
| .000 | -.3559 | -.3731 |
| 40.000 | -.3717 | -.3775 |

ALPHA ( 4) = 7.978 BETA ( 3) = 4.242 MACH = 1.2449 Q = 599.64 P = 552.75 RN/L = 3.0238

SECTION ( 1)BODY FLAP UPPER DEPENDENT VARIABLE CP

| X/LB | 1.0180 | 1.0460 |
|---|---|---|
| PHI | | |
| .000 | -.3852 | -.3952 |
| 40.000 | -.3892 | -.3955 |

ALPHA ( 5) = 11.961 BETA ( 1) = -3.847 MACH = 1.2454 Q = 599.63 P = 552.28 RN/L = 3.0229

SECTION ( 1)BODY FLAP UPPER DEPENDENT VARIABLE CP

| X/LB | 1.0180 | 1.0460 |
|---|---|---|
| PHI | | |
| .000 | -.3912 | -.4022 |
| 40.000 | -.3919 | -.4029 |

ALPHA ( 5) = 11.970 BETA ( 2) = .192 MACH = 1.2454 Q = 599.63 P = 552.28 RN/L = 3.0229

SECTION ( 1)BODY FLAP UPPER DEPENDENT VARIABLE CP

| X/LB | 1.0180 | 1.0460 |
|---|---|---|
| PHI | | |
| .000 | -.3879 | -.4035 |
| 40.000 | -.3826 | -.4051 |

AMES 11-073(OA148) -140A/B/C ORB BODY FLAP UP (XE8F77)

ALPHA ( 5) = 11.962 BETA ( 3) = 4.260 MACH = 1.2454 Q = 599.63 P = 552.28 RN/L = 3.0229

SECTION ( 1)BODY FLAP UPPER DEPENDENT VARIABLE CP

| X/LB | 1.0180 | 1.0460 |
|---|---|---|
| PHI | | |
| .000 | -.3786 | -.3915 |
| 40.000 | -.4037 | -.4061 |

AMES 11-073(OA148) -140A/B/C ORB BODY FLAP UP (XE8F78) ( 05 AUG 75 )

REFERENCE DATA

SREF = 2690.0000 SQ.FT. XMRP = 1076.6800 IN. XO
LREF = 474.6000 IN. YMRP = .0000 IN. YO
BREF = 936.0580 IN. ZMRP = 375.0000 IN. ZO
SCALE = .0300

PARAMETRIC DATA

RUDDER = -10.000 SPDBRK = .000
BDFLAP = -11.700 L-ELVN = 10.000
R-ELVN = -10.000 MACH = 1.100

ALPHA ( 1) = -4.062 BETA ( 1) = -3.838 MACH = 1.0993 Q = 599.81 P = 709.06 RN/L = 3.1886

SECTION ( 1)BODY FLAP UPPER DEPENDENT VARIABLE CP

| X/LB | 1.0180 | 1.0460 |
|---|---|---|
| PHI | | |
| .000 | -.3936 | -.3982 |
| 40.000 | -.3936 | -.4001 |

ALPHA ( 1) = -4.058 BETA ( 2) = .195 MACH = 1.0993 Q = 599.81 P = 709.06 RN/L = 3.1886

SECTION ( 1)BODY FLAP UPPER DEPENDENT VARIABLE CP

| X/LB | 1.0180 | 1.0460 |
|---|---|---|
| PHI | | |
| .000 | -.3953 | -.4034 |
| 40.000 | -.3931 | -.3991 |

ALPHA ( 1) = -4.055 BETA ( 3) = 4.277 MACH = 1.0993 Q = 599.81 P = 709.06 RN/L = 3.1886

SECTION ( 1)BODY FLAP UPPER DEPENDENT VARIABLE CP

| X/LB | 1.0180 | 1.0460 |
|---|---|---|
| PHI | | |
| .000 | -.4173 | -.4271 |
| 40.000 | -.4165 | -.4256 |

ALPHA ( 2) = .040 BETA ( 1) = -3.863 MACH = 1.0990 Q = 599.71 P = 709.30 RN/L = 3.1896

SECTION ( 1)BODY FLAP UPPER DEPENDENT VARIABLE CP

| X/LB | 1.0180 | 1.0460 |
|---|---|---|
| PHI | | |
| .000 | -.3778 | -.3837 |
| 40.000 | -.3754 | -.3809 |

AMES 11-073(OA148) -140A/B/C ORB BODY FLAP UP (XE8F78)

ALPHA ( 2) = .041 BETA ( 2) = .186 MACH = 1.0990 Q = 599.71 P = 709.30 RN/L = 3.1896

SECTION ( 1)BODY FLAP UPPER DEPENDENT VARIABLE CP

| X/LB | 1.0180 | 1.0460 |
|---|---|---|
| PHI | | |
| .000 | -.3790 | -.3893 |
| 40.000 | -.3780 | -.3845 |

ALPHA ( 2) = .036 BETA ( 3) = 4.252 MACH = 1.0990 Q = 599.71 P = 709.30 RN/L = 3.1896

SECTION ( 1)BODY FLAP UPPER DEPENDENT VARIABLE CP

| X/LB | 1.0180 | 1.0460 |
|---|---|---|
| PHI | | |
| .000 | -.3979 | -.4056 |
| 40.000 | -.3948 | -.4034 |

ALPHA ( 3) = 4.006 BETA ( 1) = -3.864 MACH = 1.0989 Q = 599.58 P = 709.30 RN/L = 3.1896

SECTION ( 1)BODY FLAP UPPER DEPENDENT VARIABLE CP

| X/LB | 1.0180 | 1.0460 |
|---|---|---|
| PHI | | |
| .000 | -.3339 | -.3824 |
| 40.000 | -.3929 | -.3846 |

ALPHA ( 3) = 4.004 BETA ( 2) = .194 MACH = 1.0969 Q = 599.58 P = 709.30 RN/L = 3.1896

SECTION ( 1)BODY FLAP UPPER DEPENDENT VARIABLE CP

| X/LB | 1.0180 | 1.0460 |
|---|---|---|
| PHI | | |
| .000 | -.3776 | -.3945 |
| 40.000 | -.3759 | -.3800 |

ALPHA ( 3) = 4.004 BETA ( 3) = 4.242 MACH = 1.0989 Q = 599.58 P = 709.30 RN/L = 3.1896

SECTION ( 1)BODY FLAP UPPER DEPENDENT VARIABLE CP

| X/LB | 1.0180 | 1.0460 |
|---|---|---|
| PHI | | |
| .000 | -.3954 | -.4028 |
| 40.000 | -.3949 | -.3966 |

AMES 11-073(OA148) -140A/B/C ORB BODY FLAP UP (XE8F78)

ALPHA ( 4) = 8.022 BETA ( 1) = -3.857 MACH = 1.1003 Q = 600.35 P = 708.37 RN/L = 3.1925

SECTION ( 1)BODY FLAP UPPER DEPENDENT VARIABLE CP

| X/LB | 1.0180 | 1.0460 |
|---|---|---|
| PHI | | |
| .000 | -.3882 | -.3923 |
| 40.000 | -.3834 | -.3911 |

ALPHA ( 4) = 8.002 BETA ( 2) = .186 MACH = 1.1003 Q = 600.35 P = 708.37 RN/L = 3.1925

SECTION ( 1)BODY FLAP UPPER DEPENDENT VARIABLE CP

| X/LB | 1.0180 | 1.0460 |
|---|---|---|
| PHI | | |
| .000 | -.3903 | -.3989 |
| 40.000 | -.3884 | -.3922 |

ALPHA ( 4) = 7.997 BETA ( 3) = 4.238 MACH = 1.1003 Q = 600.35 P = 708.37 RN/L = 3.1925

SECTION ( 1)BODY FLAP UPPER DEPENDENT VARIABLE CP

| X/LB | 1.0180 | 1.0460 |
|---|---|---|
| PHI | | |
| .000 | -.4026 | -.4108 |
| 40.000 | -.4055 | -.4088 |

ALPHA ( 5) = 11.963 BETA ( 1) = -3.838 MACH = 1.0980 Q = 599.15 P = 710.01 RN/L = 3.1917

SECTION ( 1)BODY FLAP UPPER DEPENDENT VARIABLE CP

| X/LB | 1.0180 | 1.0460 |
|---|---|---|
| PHI | | |
| .000 | -.4070 | -.4190 |
| 40.000 | -.4031 | -.4118 |

ALPHA ( 5) = 11.967 BETA ( 2) = .194 MACH = 1.0980 Q = 599.15 P = 710.01 RN/L = 3.1917

SECTION ( 1)BODY FLAP UPPER DEPENDENT VARIABLE CP

| X/LB | 1.0180 | 1.0460 |
|---|---|---|
| PHI | | |
| .000 | -.4133 | -.4263 |
| 40.000 | -.4203 | -.4219 |

AMES 11-073(OA148) -140A/B/C ORB BODY FLAP UP (XE8F78)

ALPHA ( 5) = 11.958 BETA ( 3) = 4.256 MACH = 1.0980 Q = 599.15 P = 710.0: RN/L = 3.1917

SECTION ( 1)BODY FLAP UPPER DEPENDENT VARIABLE CP

| X/LB | 1.0180 | 1.0460 |
|---|---|---|
| PHI | | |
| .000 | -.4150 | -.4335 |
| 40.000 | -.4174 | -.4263 |

AMES 11-073(OA148) -140A/B/C ORB BODY FLAP UP (XEBF79) ( 05 AUG 75 )

REFERENCE DATA

SREF = 2690.0000 SQ.FT. XMRP = 1076.5800 IN. XO
LREF = 474.8000 IN. YMRP = .0000 IN. YO
BREF = 936.0680 IN. ZMRP = 375.0000 IN. ZO
SCALE = .0300

PARAMETRIC DATA

RUDDER = -10.000 SPDBRK = .000
BDFLAP = -11.700 L-ELVN = 10.000
R-ELVN = -10.000 MACH = .900

ALPHA ( 1) = -4.051 BETA ( 1) = -3.840 MACH = .89997 Q = 600.24 P = 1058.8 RN/L = 3.5827

SECTION ( 1)BODY FLAP UPPER DEPENDENT VARIABLE CP

| X/LB | 1.0180 | 1.0460 |
|---|---|---|
| PHI | | |
| .000 | -.2474 | -.2842 |
| 40.000 | -.2495 | -.2519 |

ALPHA ( 1) = -4.055 BETA ( 2) = .202 MACH = .89997 Q = 600.24 P = 1058.8 RN/L = 3.5827

SECTION ( 1)BODY FLAP UPPER DEPENDENT VARIABLE CP

| X/LB | 1.0180 | 1.0460 |
|---|---|---|
| PHI | | |
| .000 | -.2542 | -.3070 |
| 40.000 | -.2613 | -.2661 |

ALPHA ( 1) = -4.070 BETA ( 3) = 4.283 MACH = .89997 Q = 600.24 P = 1058.8 RN/L = 3.5827

SECTION ( 1)BODY FLAP UPPER DEPENDENT VARIABLE CP

| X/LB | 1.0180 | 1.0460 |
|---|---|---|
| PHI | | |
| .000 | -.2694 | -.3150 |
| 40.000 | -.2779 | -.2820 |

ALPHA ( 2) = .045 BETA ( 1) = -3.859 MACH = .89957 Q = 599.75 P = 1058.8 RN/L = 3.5771

SECTION ( 1)BODY FLAP UPPER DEPENDENT VARIABLE CP

| X/LB | 1.0180 | 1.0460 |
|---|---|---|
| PHI | | |
| .000 | -.2455 | -.2787 |
| 40.000 | -.2262 | -.2467 |

ORIGINAL PAGE IS
OF POOR QUALITY

AMES 11-073(OA148) -140A/B/C ORB BODY FLAP UP (XEBF79)

ALPHA ( 2) = .042 BETA ( 2) = .192 MACH = .89957 Q = 599.75 P = 1058.8 RN/L = 3.5771

SECTION ( 1)BODY FLAP UPPER DEPENDENT VARIABLE CP

| X/LB | 1.0180 | 1.0460 |
|---|---|---|
| PHI | | |
| .000 | -.2604 | -.2963 |
| 40.000 | -.2418 | -.2561 |

ALPHA ( 2) = .032 BETA ( 3) = 4.260 MACH = .89957 Q = 599.75 P = 1058.8 RN/L = 3.5771

SECTION ( 1)BODY FLAP UPPER DEPENDENT VARIABLE CP

| X/LB | 1.0180 | 1.0460 |
|---|---|---|
| PHI | | |
| .000 | -.2933 | -.2983 |
| 40.000 | -.2683 | -.2805 |

ALPHA ( 3) = 4.023 BETA ( 1) = -3.861 MACH = .90070 Q = 600.44 P = 1057.3 RN/L = 3.5793

SECTION ( 1)BODY FLAP UPPER DEPENDENT VARIABLE CP

| X/LB | 1.0180 | 1.0460 |
|---|---|---|
| PHI | | |
| .000 | -.2312 | -.2587 |
| 40.000 | -.2193 | -.2378 |

ALPHA ( 3) = 4.017 BETA ( 2) = .197 MACH = .90070 Q = 600.44 P = 1057.3 RN/L = 3.5793

SECTION ( 1)BODY FLAP UPPER DEPENDENT VARIABLE CP

| X/LB | 1.0180 | 1.0460 |
|---|---|---|
| PHI | | |
| .000 | -.2375 | -.2826 |
| 40.000 | -.2305 | -.2448 |

ALPHA ( 3) = 4.017 BETA ( 3) = 4.251 MACH = .90070 Q = 600.44 P = 1057.3 RN/L = 3.5793

SECTION ( 1)BODY FLAP UPPER DEPENDENT VARIABLE CP

| X/LB | 1.0180 | 1.0460 |
|---|---|---|
| PHI | | |
| .000 | -.2923 | -.2830 |
| 40.000 | -.2649 | -.2704 |

AMES 11-073(OA148) -140A/B/C ORB BODY FLAP UP (XEBF79)

ALPHA ( 4) = 7.937 BETA ( 1) = -3.857 MACH = .90017 Q = 600.17 P = 1058.1 RN/L = 3.5825

SECTION ( 1)BODY FLAP UPPER DEPENDENT VARIABLE CP

| X/LB | 1.0180 | 1.0460 |
|---|---|---|
| PHI | | |
| .000 | -.2334 | -.2607 |
| 40.000 | -.2175 | -.2360 |

ALPHA ( 4) = 7.934 BETA ( 2) = .192 MACH = .90017 Q = 600.17 P = 1058.1 RN/L = 3.5825

SECTION ( 1)BODY FLAP UPPER DEPENDENT VARIABLE CP

| X/LB | 1.0180 | 1.0460 |
|---|---|---|
| PHI | | |
| .000 | -.2401 | -.2838 |
| 40.000 | -.2359 | -.2445 |

ALPHA ( 4) = 7.926 BETA ( 3) = 4.250 MACH = .90017 Q = 600.17 P = 1058.1 RN/L = 3.5825

SECTION ( 1)BODY FLAP UPPER DEPENDENT VARIABLE CP

| X/LB | 1.0180 | 1.0460 |
|---|---|---|
| PHI | | |
| .000 | -.2768 | -.2944 |
| 40.000 | -.2525 | -.2635 |

ALPHA ( 5) = 11.969 BETA ( 1) = -3.847 MACH = .89890 Q = 599.14 P = 1059.2 RN/L = 3.5769

SECTION ( 1)BODY FLAP UPPER DEPENDENT VARIABLE CP

| X/LB | 1.0180 | 1.0460 |
|---|---|---|
| PHI | | |
| .000 | -.2560 | -.2808 |
| 40.000 | -.2472 | -.2646 |

ALPHA ( 5) = 11.976 BETA ( 2) = .196 MACH = .89890 Q = 599.14 P = 1059.2 RN/L = 3.5769

SECTION ( 1)BODY FLAP UPPER DEPENDENT VARIABLE CP

| X/LB | 1.0180 | 1.0460 |
|---|---|---|
| PHI | | |
| .000 | -.2490 | -.2783 |
| 40.000 | -.2504 | -.2683 |

DATE 13 FEB 76 TABULATED PRESSURE DATA - OA14B ( AMES 11-073-1 )

AMES 11-073(OA14B) -140A/B/C ORB BODY FLAP UP (XEBF79)

ALPHA ( 5) = 11.956 BETA ( 3) = 4.265 MACH = .89890 Q = 599.14 P = 1059.2 RN/L = 3.5759

SECTION ( 1)BODY FLAP UPPER DEPENDENT VARIABLE CP

| X/L2 | 1.0190 | 1.0460 |
|---|---|---|
| PHI | | |
| .000 | -.2892 | -.3145 |
| 40.000 | -.2716 | -.2765 |

AMES 11-073(OA148) -140A/B/C ORB BODY FLAP UP (XE9F8C) ( 05 AUG 75 )

REFERENCE DATA

SREF = 2690.0000 SQ.FT. XMRP = 1076.5800 IN. XO
LREF = 474.8000 IN. YMRP = .0000 IN. YO
BREF = 936.0680 IN. ZMRP = 375.0000 IN. ZO
SCALE = .0300

PARAMETRIC DATA

RUDDER = -10.000 SPOBRK = .000
BDFLAP = -11.700 L-ELVN = 10.000
R-ELVN = -10.000 MACH = .500

ALPHA ( 1) = -4.078 BETA ( 1) = -7.859 MACH = .59728 Q = 595.86 P = 2385.0 RN/L = 4.8298

SECTION ( 1)BODY FLAP UPPER DEPENDENT VARIABLE CP

| X/LB | 1.0180 | 1.0460 |
|---|---|---|
| PHI | | |
| .000 | -.2369 | -.2966 |
| 40.000 | -.2496 | -.2724 |

ALPHA ( 1) = -4.062 BETA ( 2) = -3.836 MACH = .59728 Q = 595.86 P = 2385.0 RN/L = 4.8298

SECTION ( 1)BODY FLAP UPPER DEPENDENT VARIABLE CP

| X/LB | 1.0180 | 1.0460 |
|---|---|---|
| PHI | | |
| .000 | -.2345 | -.2896 |
| 40.000 | -.2521 | -.2676 |

ALPHA ( 1) = -4.061 BETA ( 3) = .183 MACH = .59728 Q = 595.86 P = 2385.0 RN/L = 4.8298

SECTION ( 1)BODY FLAP UPPER DEPENDENT VARIABLE CP

| X/LB | 1.0180 | 1.0460 |
|---|---|---|
| PHI | | |
| .000 | -.2633 | -.2961 |
| 40.000 | -.2640 | -.2778 |

ALPHA ( 1) = -3.953 BETA ( 4) = 4.258 MACH = .59728 Q = 595.86 P = 2385.0 RN/L = 4.8298

SECTION ( 1)BODY FLAP UPPER DEPENDENT VARIABLE CP

| X/LB | 1.0180 | 1.0460 |
|---|---|---|
| PHI | | |
| .000 | -.2853 | -.3106 |
| 40.000 | -.2950 | -.2893 |

AMES 11-073(OA148) -140A/B/C ORB BODY FLAP UP (XE8F80)

ALPHA ( 1) = -3.995 BETA ( 5) = 8.327 MACH = .59728 Q = 595.86 P = 2386.0 RN/L = 4.8298

SECTION ( 1)BODY FLAP UPPER DEPENDENT VARIABLE CP

| X/LB | 1.0180 | 1.0460 |
|---|---|---|
| PHI | | |
| .000 | -.2874 | -.3163 |
| 40.000 | -.2968 | -.3038 |

ALPHA ( 2) = -.053 BETA ( 1) = -7.896 MACH = .59646 Q = 594.33 P = 2386.5 RN/L = 4.8222

SECTION ( 1)BODY FLAP UPPER DEPENDENT VARIABLE CP

| X/LB | 1.0180 | 1.0460 |
|---|---|---|
| PHI | | |
| .000 | -.2409 | -.2677 |
| 40.000 | -.2437 | -.2621 |

ALPHA ( 2) = -.008 BETA ( 2) = -3.854 MACH = .59646 Q = 594.33 P = 2386.5 RN/L = 4.8222

SECTION ( 1)BODY FLAP UPPER DEPENDENT VARIABLE CP

| X/LB | 1.0180 | 1.0460 |
|---|---|---|
| PHI | | |
| .000 | -.2373 | -.2801 |
| 40.000 | -.2453 | -.2653 |

ALPHA ( 2) = .029 BETA ( 3) = .176 MACH = .59646 Q = 594.33 P = 2386.5 RN/L = 4.8222

SECTION ( 1)BODY FLAP UPPER DEPENDENT VARIABLE CP

| X/LB | 1.0180 | 1.0460 |
|---|---|---|
| PHI | | |
| .000 | -.2496 | -.2952 |
| 40.000 | -.2536 | -.2706 |

ALPHA ( 2) = .052 BETA ( 4) = 4.239 MACH = .59646 Q = 594.33 P = 2386.5 RN/L = 4.8222

SECTION ( 1)BODY FLAP UPPER DEPENDENT VARIABLE CP

| X/LB | 1.0180 | 1.0460 |
|---|---|---|
| PHI | | |
| .000 | -.2800 | -.3089 |
| 40.000 | -.2785 | -.2762 |

AMES 11-073(OA148) -140A/B/C OR8 BODY FLAP UP (XE8F80)

ALPHA ( 2) = .006 BETA ( 5) = 8.284 MACH = .59646 Q = 594.33 P = 2386.5 RN/L = 4.8222

SECTION ( 1)BODY FLAP UPPER DEPENDENT VARIABLE CP

| X/LB | 1.0180 | 1.0460 |
|---|---|---|
| PHI | | |
| .000 | -.3246 | -.3041 |
| 40.000 | -.2852 | -.2873 |

ALPHA ( 3) = 3.903 BETA ( 1) = -7.902 MACH = .59628 Q = 593.97 P = 2386.5 RN/L = 4.8207

SECTION ( 1)BODY FLAP UPPER DEPENDENT VARIABLE CP

| X/LB | 1.0180 | 1.0460 |
|---|---|---|
| PHI | | |
| .000 | -.2233 | -.2619 |
| 40.000 | -.2361 | -.2550 |

ALPHA ( 3) = 3.907 BETA ( 2) = -3.866 MACH = .59628 Q = 593.97 P = 2386.5 RN/L = 4.8207

SECTION ( 1)BODY FLAP UPPER DEPENDENT VARIABLE CP

| X/LB | 1.0180 | 1.0460 |
|---|---|---|
| PHI | | |
| .000 | -.2278 | -.2725 |
| 40.000 | -.2412 | -.2544 |

ALPHA ( 3) = 3.984 BETA ( 3) = .180 MACH = .59628 Q = 593.97 P = 2386.5 RN/L = 4.8207

SECTION ( 1)BODY FLAP UPPER DEPENDENT VARIABLE CP

| X/LB | 1.0180 | 1.0460 |
|---|---|---|
| PHI | | |
| .000 | -.2287 | -.2912 |
| 40.000 | -.2564 | -.2576 |

ALPHA ( 3) = 3.988 BETA ( 4) = 4.226 MACH = .59628 Q = 593.97 P = 2386.5 RN/L = 4.8207

SECTION ( 1)BODY FLAP UPPER DEPENDENT VARIABLE CP

| X/LB | 1.0180 | 1.0460 |
|---|---|---|
| PHI | | |
| .000 | -.2634 | -.3027 |
| 40.000 | -.2650 | -.2766 |

AMES 11-073(OA148) -140A/B/C ORB BODY FLAP UP (XEBF80)

ALPHA ( 3) = 4.029 BETA ( 5) = 8.276 MACH = .59628 Q = 593.97 P = 2386.5 RN/L = 4.8207

SECTION ( 1)BODY FLAP UPPER DEPENDENT VARIABLE CP

| X/LB | 1.0180 | 1.0460 |
|---|---|---|
| PHI | | |
| .000 | -.2462 | -.3056 |
| 40.000 | -.2749 | -.2725 |

ALPHA ( 4) = 7.903 BETA ( 1) = -7.896 MACH = .59626 Q = 593.85 P = 2386.1 RN/L = 4.8197

SECTION ( 1)BODY FLAP UPPER DEPENDENT VARIABLE CP

| X/LB | 1.0180 | 1.0460 |
|---|---|---|
| PHI | | |
| .000 | -.2210 | -.2559 |
| 40.000 | -.2279 | -.2526 |

ALPHA ( 4) = 7.912 BETA ( 2) = -3.851 MACH = .59626 Q = 593.85 P = 2386.1 RN/L = 4.8197

SECTION ( 1)BODY FLAP UPPER DEPENDENT VARIABLE CP

| X/LB | 1.0180 | 1.0460 |
|---|---|---|
| PHI | | |
| .000 | -.2256 | -.2636 |
| 40.000 | -.2358 | -.2447 |

ALPHA ( 4) = 8.059 BETA ( 3) = .184 MACH = .59626 Q = 593.85 P = 2386.1 RN/L = 4.8197

SECTION ( 1)BODY FLAP UPPER DEPENDENT VARIABLE CP

| X/LB | 1.0180 | 1.0460 |
|---|---|---|
| PHI | | |
| .000 | -.2557 | -.2871 |
| 40.000 | -.2418 | -.2524 |

ALPHA ( 4) = 8.016 BETA ( 4) = 4.233 MACH = .59626 Q = 593.85 P = 2386.1 RN/L = 4.8197

SECTION ( 1)BODY FLAP UPPER DEPENDENT VARIABLE CP

| X/LB | 1.0180 | 1.0460 |
|---|---|---|
| PHI | | |
| .000 | -.2394 | -.3004 |
| 40.000 | -.2615 | -.2712 |

AMES 11-073(OA148) -140A/B/C ORB BODY FLAP UP (XEBF80)

ALPHA ( 4) = 8.043 BETA ( 5) = 8.283 MACH = .59626 Q = 593.85 P = 2386.1 RN/L = 4.8197

SECTION ( 1)BODY FLAP UPPER DEPENDENT VARIABLE CP

| X/LB | 1.0180 | 1.0460 |
|---|---|---|
| PHI | | |
| .000 | -.2942 | -.3000 |
| 40.000 | -.2789 | -.2789 |

ALPHA ( 5) = 11.974 BETA ( 1) = -7.860 MACH = .59650 Q = 594.19 P = 2385.7 RN/L = 4.8199

SECTION ( 1)BODY FLAP UPPER DEPENDENT VARIABLE CP

| X/LB | 1.0180 | 1.0460 |
|---|---|---|
| PHI | | |
| .000 | -.2260 | -.2615 |
| 40.000 | -.2290 | -.2469 |

ALPHA ( 5) = 11.993 BETA ( 2) = -3.842 MACH = .59650 Q = 594.19 P = 2385.7 RN/L = 4.8199

SECTION ( 1)BODY FLAP UPPER DEPENDENT VARIABLE CP

| X/LB | 1.0180 | 1.0460 |
|---|---|---|
| PHI | | |
| .000 | -.2231 | -.2640 |
| 40.000 | -.2347 | -.2475 |

ALPHA ( 5) = 12.035 BETA ( 3) = .179 MACH = .59650 Q = 594.19 P = 2385.7 RN/L = 4.8199

SECTION ( 1)BODY FLAP UPPER DEPENDENT VARIABLE CP

| X/LB | 1.0180 | 1.0460 |
|---|---|---|
| PHI | | |
| .000 | -.2303 | -.2760 |
| 40.000 | -.2397 | -.2548 |

ALPHA ( 5) = 12.027 BETA ( 4) = 4.242 MACH = .59650 Q = 594.19 P = 2385.7 RN/L = 4.8199

SECTION ( 1)BODY FLAP UPPER DEPENDENT VARIABLE CP

| X/LB | 1.0180 | 1.0460 |
|---|---|---|
| PHI | | |
| .000 | -.2374 | -.2810 |
| 40.000 | -.2480 | -.2636 |

AMES 11-073(OA148) -140A/B/C ORB BODY FLAP UP (XE8F80)

ALPHA ( 5) = 12.061 BETA ( 5) = 8.297 MACH = .59650 Q = 594.19 P = 2385.7 RN/L = 4.8199

SECTION ( 1)BODY FLAP UPPER DEPENDENT VARIABLE CP

| X/LB | 1.0180 | 1.0460 |
|---|---|---|
| PHI | | |
| .000 | -.2760 | -.2833 |
| 40.000 | -.2774 | -.2897 |

AMES 11-073(OA148) -140A/B/C ORB BODY FLAP UP (XE8F81) ( 05 AUG 75 )

REFERENCE DATA

SREF = 2690.0000 SQ.FT. XMRP = 1076.6800 IN. XO
LREF = 474.8000 IN. YMRP = .0000 IN. YO
BREF = 935.0690 IN. ZMRP = 375.0000 IN. ZO
SCALE = .0300

PARAMETRIC DATA

RUDDER = 10.000 SPDBRK = .000
BDFLAP = -11.700 L-ELVN = -10.000
R-ELVN = 10.000 MACH = 1.400

ALPHA ( 1) = -3.955 BETA ( 1) = .176 MACH = 1.3929 Q = 599.69 P = 441.59 RN/L = 2.9281

SECTION ( 1)BODY FLAP UPPER DEPENDENT VARIABLE CP

| X/LB | 1.0180 | 1.0460 |
|---|---|---|
| PHI | | |
| .000 | -.3588 | -.3624 |
| 40.000 | -.3634 | -.3749 |

ALPHA ( 2) = .028 BETA ( 1) = .177 MACH = 1.3894 Q = 599.62 P = 443.71 RN/L = 2.9315

SECTION ( 1)BODY FLAP UPPER DEPENDENT VARIABLE CP

| X/LB | 1.0180 | 1.0460 |
|---|---|---|
| PHI | | |
| .000 | -.3536 | -.3584 |
| 40.000 | -.3604 | -.3693 |

ALPHA ( 3) = 3.945 BETA ( 1) = -3.872 MACH = 1.3917 Q = 599.67 P = 442.30 RN/L = 2.9226

SECTION ( 1)BODY FLAP UPPER DEPENDENT VARIABLE CP

| X/LB | 1.0180 | 1.0460 |
|---|---|---|
| PHI | | |
| .000 | -.3563 | -.3607 |
| 40.000 | -.3558 | -.3599 |

ALPHA ( 3) = 3.983 BETA ( 2) = .185 MACH = 1.3917 Q = 599.67 P = 442.30 RN/L = 2.9226

SECTION ( 1)BODY FLAP UPPER DEPENDENT VARIABLE CP

| X/LB | 1.0180 | 1.0460 |
|---|---|---|
| PHI | | |
| .000 | -.3480 | -.3543 |
| 40.000 | -.3521 | -.3572 |

ORIGINAL PAGE IS
OF POOR QUALITY

AMES 11-073(OA148) -140A/B/C CRB BODY FLAP UP (XE8F81)

ALPHA ( 5) = 3.932 BETA ( 3) = 4.246 MACH = 1.3917 Q = 599.67 P = 442.30 RN/L = 2.9226

SECTION ( 1)BODY FLAP UPPER DEPENDENT VARIABLE CP

| X/LB | 1.0180 | 1.0460 |
|---|---|---|
| PHI | | |
| .000 | -.3458 | -.3557 |
| 40.000 | -.3537 | -.3600 |

ALPHA ( 4) = 7.903 BETA ( 1) = .179 MACH = 1.3906 Q = 599.65 P = 443.00 RN/L = 2.9169

SECTION ( 1)BODY FLAP UPPER DEPENDENT VARIABLE CP

| X/LB | 1.0180 | 1.0460 |
|---|---|---|
| PHI | | |
| .000 | -.3420 | -.3459 |
| 40.000 | -.3510 | -.3546 |

ALPHA ( 5) = 11.906 BETA ( 1) = -3.868 MACH = 1.3903 Q = 599.44 P = 443.00 RN/L = 2.9079

SECTION ( 1)BODY FLAP UPPER DEPENDENT VARIABLE CP

| X/LB | 1.0180 | 1.0460 |
|---|---|---|
| PHI | | |
| .000 | -.3626 | -.3759 |
| 40.000 | -.3696 | -.3887 |

ALPHA ( 5) = 11.888 BETA ( 2) = .169 MACH = 1.3903 Q = 599.44 P = 443.00 RN/L = 2.9079

SECTION ( 1)BODY FLAP UPPER DEPENDENT VARIABLE CP

| X/LB | 1.0180 | 1.0460 |
|---|---|---|
| PHI | | |
| .000 | -.3434 | -.3526 |
| 40.000 | -.3669 | -.3753 |

ALPHA ( 5) = 11.887 BETA ( 3) = 4.249 MACH = 1.3903 Q = 599.44 P = 443.00 RN/L = 2.9079

SECTION ( 1)BODY FLAP UPPER DEPENDENT VARIABLE CP

| X/LB | 1.0180 | 1.0460 |
|---|---|---|
| PHI | | |
| .000 | -.3724 | -.3811 |
| 40.000 | -.3748 | -.3743 |

AMES 11-073(OA148) -140A/B/C ORB BODY FLAP UP (XE8F81)

ALPHA ( G) = 15.870 BETA ( I) = .160 MACH = 1.3887 Q = 599.91 P = 444.41 RN/L = 2.9065

SECTION ( 1)BODY FLAP UPPER DEPENDENT VARIABLE CP

| X/LB | 1.0180 | 1.0460 |
|---|---|---|
| PHI | | |
| .000 | -.3634 | -.3765 |
| 40.000 | -.3859 | -.3922 |

AMES 11-073(OA148) -140A/B/C ORB BODY FLAP UP (XEBFB2) ( 05 AUG 75 )

REFERENCE DATA

SREF = 2690.0000 SQ.FT. XMRP = 1076.6800 IN. XO
LREF = 474.8000 IN. YMRP = .0000 IN. YO
BREF = 935.0680 IN. ZMRP = 375.0000 IN. ZO
SCALE = .0300

PARAMETRIC DATA

RUDDER = 10.000 SPDBRK = .000
BDFLAP = -11.700 L-ELVN = -10.000
R-ELVN = 10.000 MACH = 1.250

ALPHA ( 1) = -4.001 BETA ( 1) = .172 MACH = 1.2466 Q = 600.03 P = 551.58 RN/L = 3.0277

SECTION ( 1)BODY FLAP UPPER DEPENDENT VARIABLE CP

| X/LB | 1.0180 | 1.0460 |
|---|---|---|
| PHI | | |
| .000 | -.3841 | -.3861 |
| 40.000 | -.3846 | -.3887 |

ALPHA ( 2) = .004 BETA ( 1) = .171 MACH = 1.2457 Q = 599.87 P = 552.28 RN/L = 3.0295

SECTION ( 1)BODY FLAP UPPER DEPENDENT VARIABLE CP

| X/LB | 1.0180 | 1.0460 |
|---|---|---|
| PHI | | |
| .000 | -.3834 | -.3851 |
| 40.000 | -.3870 | -.3853 |

ALPHA ( 3) = 3.913 BETA ( 1) = -3.880 MACH = 1.2454 Q = 599.82 P = 552.51 RN/L = 3.0275

SECTION ( 1)BODY FLAP UPPER DEPENDENT VARIABLE CP

| X/LB | 1.0180 | 1.0460 |
|---|---|---|
| PHI | | |
| .000 | -.3906 | -.3920 |
| 40.000 | -.3888 | -.3946 |

ALPHA ( 3) = 3.950 BETA ( 2) = .192 MACH = 1.2454 Q = 599.82 P = 552.51 RN/L = 3.0275

SECTION ( 1)BODY FLAP UPPER DEPENDENT VARIABLE CP

| X/LB | 1.0180 | 1.0460 |
|---|---|---|
| PHI | | |
| .000 | -.3782 | -.3825 |
| 40.000 | -.3832 | -.3964 |

AMES 11-073(OA148) -140A/B/C ORB BODY FLAP UP (XEBF82)

ALPHA ( 3) = 3.915 BETA ( 3) = 4.246 MACH = 1.2454 Q = 599.82 P = 552.51 RN/L = 3.0275

SECTION ( 1)BODY FLAP UPPER DEPENDENT VARIABLE CP

| X/LB | 1.0180 | 1.0460 |
|---|---|---|
| PHI | | |
| .000 | -.3798 | -.3837 |
| 40.000 | -.3830 | -.3890 |

ALPHA ( 4) = 7.875 BETA ( 1) = .170 MACH = 1.2457 Q = 599.87 P = 552.28 RN/L = 3.0295

SECTION ( 1)BODY FLAP UPPER DEPENDENT VARIABLE CP

| X/LB | 1.0180 | 1.0460 |
|---|---|---|
| PHI | | |
| .000 | -.3739 | -.3765 |
| 40.000 | -.3779 | -.3768 |

ALPHA ( 5) = 11.893 BETA ( 1) = -3.862 MACH = 1.2456 Q = 600.06 P = 552.51 RN/L = 3.0278

SECTION ( 1)BODY FLAP UPPER DEPENDENT VARIABLE CP

| X/LB | 1.0180 | 1.0460 |
|---|---|---|
| PHI | | |
| .000 | -.3997 | -.4055 |
| 40.000 | -.4043 | -.4268 |

ALPHA ( 5) = 11.948 BETA ( 2) = .178 MACH = 1.2456 Q = 600.06 P = 552.51 RN/L = 3.0278

SECTION ( 1)BODY FLAP UPPER DEPENDENT VARIABLE CP

| X/LB | 1.0180 | 1.0460 |
|---|---|---|
| PHI | | |
| .000 | -.3773 | -.3901 |
| 40.000 | -.4032 | -.4175 |

ALPHA ( 5) = 11.969 BETA ( 3) = 4.251 MACH = 1.2456 Q = 600.06 P = 552.51 RN/L = 3.0278

SECTION ( 1)BODY FLAP UPPER DEPENDENT VARIABLE CP

| X/LB | 1.0180 | 1.0460 |
|---|---|---|
| PHI | | |
| .000 | -.4025 | -.4080 |
| 40.000 | -.4054 | -.4076 |

AMES 11-073(OA148) -140A/B/C ORB BODY FLAP UP (XEBF83) ( 05 AUG 75 )

REFERENCE DATA

SREF = 2690.0000 SQ.FT. XMRP = 1076.6800 IN. XO
LREF = 474.8000 IN. YMRP = .0000 IN. YO
BREF = 936.0100 IN. ZMRP = 375.0000 IN. ZO
SCALE = .0300

PARAMETRIC DATA

RUDDER = 10.000 SPDBRK = .000
BDFLAP = -11.700 L-ELVN = -10.000
R-ELVN = 10.000 MACH = 1.100

ALPHA ( 1) = -3.943 BETA ( 1) = .171 MACH = 1.0992 Q = 599.30 P = 708.59 RN/L = 3.1942

SECTION ( 1)BODY FLAP UPPER DEPENDENT VARIABLE CP

| X/LB | 1.0180 | 1.0460 |
|---|---|---|
| PHI | | |
| .000 | -.3997 | -.4094 |
| 40.000 | -.4014 | -.4101 |

ALPHA ( 2) = .065 BETA ( 1) = .171 MACH = 1.0980 Q = 599.15 P = 710.01 RN/L = 3.1985

SECTION ( 1)BODY FLAP UPPER DEPENDENT VARIABLE CP

| X/LB | 1.0180 | 1.0460 |
|---|---|---|
| PHI | | |
| .000 | -.3921 | -.3943 |
| 40.000 | -.3909 | -.3989 |

ALPHA ( 3) = 3.859 BETA ( 1) = -3.876 MACH = 1.0981 Q = 598.75 P = 709.30 RN/L = 3.1983

SECTION ( 1)BODY FLAP UPPER DEPENDENT VARIABLE CP

| X/LB | 1.0180 | 1.0460 |
|---|---|---|
| PHI | | |
| .000 | -.4001 | -.4078 |
| 40.000 | -.4047 | -.4102 |

ALPHA ( 3) = 3.908 BETA ( 2) = .189 MACH = 1.0991 Q = 598.75 P = 709.30 RN/L = 3.1983

SECTION ( 1)BODY FLAP UPPER DEPENDENT VARIABLE CP

| X/LB | 1.0180 | 1.0460 |
|---|---|---|
| PHI | | |
| .000 | -.3820 | -.3849 |
| 40.000 | -.3825 | -.3883 |

AMES 11-073(OA148) -140A/B/C ORB BODY FLAP UP (XE8F83)

ALPHA ( 3) = 3.913 BETA ( 3) = 4.243 MACH = 1.0981 Q = 598.75 P = 709.30 RN/L = 3.1983

SECTION ( 1)BODY FLAP UPPER DEPENDENT VARIABLE CP

| X/LB | 1.0180 | 1.0460 |
|---|---|---|
| PHI | | |
| .000 | -.3869 | -.3874 |
| 40.000 | -.3677 | -.3913 |

ALPHA ( 4) = 8.023 BETA ( 1) = .173 MACH = 1.0972 Q = 598.87 P = 710.71 RN/L = 3.1996

SECTION ( 1)BODY FLAP UPPER DEPENDENT VARIABLE CP

| X/LB | 1.0180 | 1.0460 |
|---|---|---|
| PHI | | |
| .000 | -.3941 | -.3944 |
| 40.000 | -.3905 | -.4007 |

ALPHA ( 5) = 11.886 BETA ( 1) = -3.856 MACH = 1.0968 Q = 598.64 P = 710.95 RN/L = 3.1978

SECTION ( 1)BODY FLAP UPPER DEPENDENT VARIABLE CP

| X/LB | 1.0180 | 1.0460 |
|---|---|---|
| PHI | | |
| .000 | -.4228 | -.4416 |
| 40.000 | -.4437 | -.4469 |

ALPHA ( 5) = 11.964 BETA ( 2) = .179 MACH = 1.0968 Q = 598.64 P = 710.95 RN/L = 3.1978

SECTION ( 1)BODY FLAP UPPER DEPENDENT VARIABLE CP

| X/LB | 1.0180 | 1.0460 |
|---|---|---|
| PHI | | |
| .000 | -.4163 | -.4207 |
| 40.000 | -.4229 | -.4360 |

ALPHA ( 5) = 11.963 BETA ( 3) = 4.251 MACH = 1.0968 Q = 598.64 P = 710.95 RN/L = 3.1978

SECTION ( 1)BODY FLAP UPPER DEPENDENT VARIABLE CP

| X/LB | 1.0180 | 1.0460 |
|---|---|---|
| PHI | | |
| .000 | -.4121 | -.4150 |
| 40.000 | -.4135 | -.4192 |

AMES 11-073(OA148) -140A/B/C ORB BODY FLAP UP (XESF84) ( 05 AUG 75 )

REFERENCE DATA

SREF = 2690.0000 SQ.FT. XMRP = 1076.6800 IN. XO
LREF = 474.8000 IN. YMRP = .0000 IN. YO
BREF = 936.0680 IN. ZMRP = 375.0000 IN. ZO
SCALE = .0300

PARAMETRIC DATA

RUDDER = 10.000 SPDBRK = .000
BDFLAP = -11.700 L-ELVN = -10.000
R-ELVN = 10.000 MACH = .900

ALPHA ( 1) = -3.965 BETA ( 1) = .165 MACH = .89930 Q = 599.63 P = 1059.2 RN/L = 3.5885

SECTION ( 1)BODY FLAP UPPER DEPENDENT VARIABLE CP

| X/LB | 1.0180 | 1.0460 |
|---|---|---|
| PHI | | |
| .000 | -.2789 | -.2953 |
| 40.000 | -.2701 | -.2860 |

ALPHA ( 2) = .057 BETA ( 1) = .165 MACH = .89770 Q = 598.28 P = 1060.7 RN/L = 3.5863

SECTION ( 1)BODY FLAP UPPER DEPENDENT VARIABLE CP

| X/LB | 1.0180 | 1.0460 |
|---|---|---|
| PHI | | |
| .000 | -.2657 | -.2810 |
| 40.000 | -.2589 | -.2767 |

ALPHA ( 3) = 3.888 BETA ( 1) = -3.885 MACH = .89803 Q = 598.38 P = 1060.0 RN/L = 3.5814

SECTION ( 1)BODY FLAP UPPER DEPENDENT VARIABLE CP

| X/LB | 1.0180 | 1.0460 |
|---|---|---|
| PHI | | |
| .000 | -.2809 | -.2937 |
| 40.000 | -.2655 | -.2723 |

ALPHA ( 3) = 4.092 BETA ( 2) = .164 MACH = .89803 Q = 598.38 P = 1060.0 RN/L = 3.5814

SECTION ( 1)BODY FLAP UPPER DEPENDENT VARIABLE CP

| X/LB | 1.0180 | 1.0460 |
|---|---|---|
| PHI | | |
| .000 | -.2545 | -.2802 |
| 40.000 | -.2507 | -.2742 |

AMES 11-073(OA148) -140A/B/C ORB BODY FLAP UP (XE8F84)

ALPHA ( 3) = 3.999 BETA ( 3) = 4.248 MACH = .89803 Q = 598.38 P = 1050.0 RN/L = 3.5814

SECTION ( 1)BODY FLAP UPPER DEPENDENT VARIABLE CP

| X/LB | 1.0180 | 1.0460 |
|---|---|---|
| PHI | | |
| .000 | -.2455 | -.2628 |
| 40.000 | -.2431 | -.2457 |

ALPHA ( 4) = 8.008 BETA ( 1) = .163 MACH = .89820 Q = 598.16 P = 1059.3 RN/L = 3.5782

SECTION ( 1)BODY FLAP UPPER DEPENDENT VARIABLE CP

| X/LB | 1.0180 | 1.0460 |
|---|---|---|
| PHI | | |
| .000 | -.2432 | -.2709 |
| 40.000 | -.2420 | -.2639 |

ALPHA ( 5) = 11.989 BETA ( 1) = .169 MACH = .89670 Q = 597.36 P = 1061.4 RN/L = 3.5769

SECTION ( 1)BODY FLAP UPPER DEPENDENT VARIABLE CP

| X/LB | 1.0180 | 1.0460 |
|---|---|---|
| PHI | | |
| .000 | -.2518 | -.2804 |
| 40.000 | -.2576 | -.2909 |

AMES 11-073(OA148) -140A/B/C ORB BODY FLAP UP (XEBF85) ( 05 AUG 75 )

REFERENCE DATA

SREF = 2690.0000 SQ.FT. XMRP = 1076.6800 IN. XO
LREF = 474.6000 IN. YMRP = .0000 IN. YO
BREF = 936.0000 IN. ZMRP = 375.0000 IN. ZO
SCALE = .0300

PARAMETRIC DATA

RUDDER = 10.000 SPDBRK = .000
BDFLAP = -11.700 L-ELVN = -10.000
R-ELVN = 10.000 MACH = .600

ALPHA ( 1) = -3.903 BETA ( 1) = .164 MACH = .59620 Q = 593.85 P = 2386.4 RN/L = 4.8166

SECTION ( 1)BODY FLAP UPPER DEPENDENT VARIABLE CP

| X/LB | 1.0180 | 1.0460 |
|---|---|---|
| PHI | | |
| .000 | -.2779 | -.3074 |
| 40.000 | -.2797 | -.2917 |

ALPHA ( 2) = .072 BETA ( 1) = .163 MACH = .59620 Q = 593.87 P = 2387.1 RN/L = 4.8288

SECTION ( 1)BODY FLAP UPPER DEPENDENT VARIABLE CP

| X/LB | 1.0180 | 1.0460 |
|---|---|---|
| PHI | | |
| .000 | -.2695 | -.3117 |
| 40.000 | -.2695 | -.2887 |

ALPHA ( 3) = 4.077 BETA ( 1) = .160 MACH = .59680 Q = 595.04 P = 2386.4 RN/L = 4.8327

SECTION ( 1)BODY FLAP UPPER DEPENDENT VARIABLE CP

| X/LB | 1.0180 | 1.0460 |
|---|---|---|
| PHI | | |
| .000 | -.2599 | -.2953 |
| 40.000 | -.2723 | -.2773 |

ALPHA ( 4) = 9.047 BETA ( 1) = .158 MACH = .59710 Q = 595.63 P = 2386.4 RN/L = 4.8284

SECTION ( 1)BODY FLAP UPPER DEPENDENT VARIABLE CP

| X/LB | 1.0180 | 1.0460 |
|---|---|---|
| PHI | | |
| .000 | -.2526 | -.2914 |
| 40.000 | -.2506 | -.2760 |

AMES 11-073(OA148) -140A/B/C ORB BODY FLAP UP (XE8F85)

ALPHA ( 5) = 12.046 BETA ( 1) = .156 MACH = .59710 Q = 595.63 P = 2386.4 RN/L = 4.8340

SECTION ( 1)BODY FLAP UPPER DEPENDENT VARIABLE CP

| X/LB | 1.0180 | 1.0460 |
|---|---|---|
| PHI | | |
| .000 | -.2854 | -.2789 |
| 40.000 | -.2723 | -.2791 |

ORIGINAL PAGE IS
OF POOR QUALITY

AMES 11-073(OA148) -140A/B/C/R ORB BODY FLAP LWR (XE8G01) ( 05 AUG 75 )

REFERENCE DATA

SREF = 2690.0000 SQ.FT. XMRP = 1076.6800 IN. XO
LREF = 474.8000 IN. YMRP = .0000 IN. YO
BREF = 936.0680 IN. ZMRP = 375.0000 IN. ZO
SCALE = .0300

PARAMETRIC DATA

RUDDER = .000 SPDBRK = 55.000
BDFLAP = 16.300 L-ELVN = .000
R-ELVN = .000 MACH = 1.400

ALPHA ( 1) = -4.099 BETA ( 1) = -3.881 MACH = 1.3933 Q = 599.80 P = 441.36 RN/L = 2.9079

SECTION ( 1)BODY FLAP LOWER DEPENDENT VARIABLE CP

| X/LB | 1.0180 | 1.0460 |
|---|---|---|
| PHI | | |
| .000 | .1908 | .1870 |
| 40.000 | .0398 | -.0094 |

ALPHA ( 1) = -4.089 BETA ( 2) = .154 MACH = 1.3933 Q = 599.80 P = 441.36 RN/L = 2.9078

SECTION ( 1)BODY FLAP LOWER DEPENDENT VARIABLE CP

| X/LB | 1.0180 | 1.0460 |
|---|---|---|
| PHI | | |
| .000 | .1812 | .1779 |
| 40.000 | .1021 | .0439 |

ALPHA ( 1) = -4.099 BETA ( 3) = 4.236 MACH = 1.3933 Q = 599.80 P = 441.36 RN/L = 2.9078

SECTION ( 1)BODY FLAP LOWER DEPENDENT VARIABLE CP

| X/LB | 1.0180 | 1.0460 |
|---|---|---|
| PHI | | |
| .000 | .1848 | .1769 |
| 40.000 | .0374 | .0656 |

ALPHA ( 2) = -.076 BETA ( 1) = -3.908 MACH = 1.3937 Q = 599.50 P = 440.89 RN/L = 2.9103

SECTION ( 1)BODY FLAP LOWER DEPENDENT VARIABLE CP

| X/LB | 1.0180 | 1.0460 |
|---|---|---|
| PHI | | |
| .000 | .2394 | .2289 |
| 40.000 | .1468 | .0818 |

AMES 11-073(OA148) -140A/B/C/R ORB BODY FLAP LWR (XE8G01)

ALPHA ( 2) = -.071 BETA ( 2) = .147 MACH = 1.3937 Q = 599.50 P = 440.89 RN/L = 2.9103

SECTION ( 1)BODY FLAP LOWER DEPENDENT VARIABLE CP

| X/LB | 1.0180 | 1.0460 |
|---|---|---|
| PHI | | |
| .000 | .2514 | .2337 |
| 40.000 | .1435 | .0929 |

ALPHA ( 2) = -.058 BETA ( 3) = 4.215 MACH = 1.3937 Q = 599.50 P = 440.89 RN/L = 2.9103

SECTION ( 1)BODY FLAP LOWER DEPENDENT VARIABLE CP

| X/LB | 1.0180 | 1.0460 |
|---|---|---|
| PHI | | |
| .000 | .2397 | .2232 |
| 40.000 | .1463 | .0975 |

ALPHA ( 3) = 3.825 BETA ( 1) = -3.904 MACH = 1.3940 Q = 600.01 P = 441.12 RN/L = 2.9038

SECTION ( 1)BODY FLAP LOWER DEPENDENT VARIABLE CP

| X/LB | 1.0180 | 1.0460 |
|---|---|---|
| PHI | | |
| .000 | .3321 | .3094 |
| 40.000 | .2403 | .1640 |

ALPHA ( 3) = 3.826 BETA ( 2) = .146 MACH = 1.3940 Q = 600.01 P = 441.12 RN/L = 2.9038

SECTION ( 1)BODY FLAP LOWER DEPENDENT VARIABLE CP

| X/LB | 1.0180 | 1.0460 |
|---|---|---|
| PHI | | |
| .000 | .3261 | .3015 |
| 40.000 | .2221 | .1542 |

ALPHA ( 3) = 3.827 BETA ( 3) = 4.205 MACH = 1.3940 Q = 600.01 P = 441.12 RN/L = 2.9038

SECTION ( 1)BODY FLAP LOWER DEPENDENT VARIABLE CP

| X/LB | 1.0180 | 1.0460 |
|---|---|---|
| PHI | | |
| .000 | .3342 | .3056 |
| 40.000 | .2124 | .1583 |

AMES 11-073(OA148) -140A/B/C/R ORB BODY FLAP LWR (XEBGD1)

ALPHA ( 4) = 7.859 BETA ( 1) = -3.903 MACH = 1.3935 Q = 599.60 P = 441.12 RN/L = 2.9058

SECTION ( 1)BODY FLAP LOWER DEPENDENT VARIABLE CP

| X/LB | 1.0180 | 1.0460 |
|---|---|---|
| PHI | | |
| .000 | .4429 | .3833 |
| 40.000 | .3220 | .2313 |

ALPHA ( 4) = 7.859 BETA ( 2) = .143 MACH = 1.3935 Q = 599.60 P = 441.12 RN/L = 2.9058

SECTION ( 1)BODY FLAP LOWER DEPENDENT VARIABLE CP

| X/LB | 1.0180 | 1.0460 |
|---|---|---|
| PHI | | |
| .000 | .4330 | .3756 |
| 40.000 | .3155 | .2327 |

ALPHA ( 4) = 7.869 BETA ( 3) = 4.207 MACH = 1.3935 Q = 599.60 P = 441.12 RN/L = 2.9058

SECTION ( 1)BODY FLAP LOWER DEPENDENT VARIABLE CP

| X/LB | 1.0180 | 1.0460 |
|---|---|---|
| PHI | | |
| .000 | .4397 | .3809 |
| 40.000 | .3064 | .2352 |

ALPHA ( 5) = 11.904 BETA ( 1) = -3.884 MACH = 1.3941 Q = 599.51 P = 440.65 RN/L = 2.9230

SECTION ( 1)BODY FLAP LOWER DEPENDENT VARIABLE CP

| X/LB | 1.0180 | 1.0460 |
|---|---|---|
| PHI | | |
| .000 | .5473 | .4526 |
| 40.000 | .4113 | .2825 |

ALPHA ( 5) = 11.913 BETA ( 2) = .151 MACH = 1.3941 Q = 599.51 P = 440.65 RN/L = 2.9230

SECTION ( 1)BODY FLAP LOWER DEPENDENT VARIABLE CP

| X/LB | 1.0180 | 1.0460 |
|---|---|---|
| PHI | | |
| .000 | .5399 | .4483 |
| 40.000 | .4059 | .2957 |

AMES 11-073(OA148) -140A/B/C/R ORB BODY FLAP LWR (XE8G01)

ALPHA ( 5) = 11.909 BETA ( 3) = 4.219 MACH = 1.3941 Q = 599.51 P = 440.65 RN/L = 2.9230

SECTION ( 1)BODY FLAP LOWER DEPENDENT VARIABLE CP

| X/LB | 1.0180 | 1.0460 |
|---|---|---|
| PHI | | |
| .000 | .5424 | .4529 |
| 40.000 | .3947 | .3095 |

ALPHA ( 6) = 15.872 BETA ( 1) = -3.862 MACH = 1.3935 Q = 599.60 P = 441.12 RN/L = 2.9239

SECTION ( 1)BODY FLAP LOWER DEPENDENT VARIABLE CP

| X/LB | 1.0180 | 1.0460 |
|---|---|---|
| PHI | | |
| .000 | .6373 | .5126 |
| 40.000 | .4847 | .3371 |

ALPHA ( 6) = 15.885 BETA ( 2) = .149 MACH = 1.3935 Q = 599.60 P = 441.12 RN/L = 2.9239

SECTION ( 1)BODY FLAP LOWER DEPENDENT VARIABLE CP

| X/LB | 1.0180 | 1.0460 |
|---|---|---|
| PHI | | |
| .000 | .6369 | .5125 |
| 40.000 | .4833 | .3532 |

ALPHA ( 6) = 15.901 BETA ( 3) = 4.249 MACH = 1.3935 Q = 599.60 P = 441.12 RN/L = 2.9239

SECTION ( 1)BODY FLAP LOWER DEPENDENT VARIABLE CP

| X/LB | 1.0180 | 1.0460 |
|---|---|---|
| PHI | | |
| .000 | .6383 | .5132 |
| 40.000 | .4722 | .3632 |

AMES 11-073(OA148) -140A/B/C/R ORB BODY FLAP LWR (XEB002) ( 05 AUG 75 )

REFERENCE DATA

SREF = 2690.0000 SQ.FT. XMRP = 1076.6800 IN. XO
LREF = 474.8000 IN. YMRP = .0000 IN. YO
BREF = 936.0680 IN. ZMRP = 375.0000 IN. ZO
SCALE = .0300

PARAMETRIC DATA

RUDDER = .000 SPDBRK = 55.000
BDFLAP = 16.300 L-ELVN = .000
R-ELVN = .000 MACH = 1.250

ALPHA ( 1) = -4.081 BETA ( 1) = -3.888 MACH = 1.2475 Q = 599.57 P = 550.40 RN/L = 3.0108

SECTION ( 1)BODY FLAP LOWER DEPENDENT VARIABLE CP

| X/LB | 1.0180 | 1.0460 |
|---|---|---|
| PHI | | |
| .000 | .2149 | .1745 |
| 40.000 | .0378 | -.0035 |

ALPHA ( 1) = -4.075 BETA ( 2) = .154 MACH = 1.2475 Q = 599.57 P = 550.40 RN/L = 3.0108

SECTION ( 1)BODY FLAP LOWER DEPENDENT VARIABLE CP

| X/LB | 1.0180 | 1.0460 |
|---|---|---|
| PHI | | |
| .000 | .2088 | .1828 |
| 40.000 | .0703 | .0230 |

ALPHA ( 1) = -4.083 BETA ( 3) = 4.234 MACH = 1.2475 Q = 599.57 P = 550.40 RN/L = 3.0108

SECTION ( 1)BODY FLAP LOWER DEPENDENT VARIABLE CP

| X/LB | 1.0180 | 1.0460 |
|---|---|---|
| PHI | | |
| .000 | .2058 | .1633 |
| 40.000 | .0981 | .0371 |

ALPHA ( 2) = -.037 BETA ( 1) = -3.909 MACH = 1.2477 Q = 599.51 P = 550.16 RN/L = 3.0131

SECTION ( 1)BODY FLAP LOWER DEPENDENT VARIABLE CP

| X/LB | 1.0180 | 1.0460 |
|---|---|---|
| PHI | | |
| .000 | .2549 | .2141 |
| 40.000 | .1441 | .0893 |

AMES 11-073(OA148) -140A/B/C/R ORB BODY FLAP LWR (XE8G02)

ALPHA ( 2) = -.032 BETA ( 2) = .147 MACH = 1.2477 Q = 599.51 P = 550.16 RN/L = 3.0131

SECTION ( 1)BODY FLAP LOWER DEPENDENT VARIABLE CP

| X/LB | 1.0180 | 1.0460 |
|---|---|---|
| PHI | | |
| .000 | .2761 | .2265 |
| 40.000 | .1340 | .0779 |

ALPHA ( 2) = -.038 BETA ( 3) = 4.211 MACH = 1.2477 Q = 599.51 P = 550.16 RN/L = 3.0131

SECTION ( 1)BODY FLAP LOWER DEPENDENT VARIABLE CP

| X/LB | 1.0180 | 1.0460 |
|---|---|---|
| PHI | | |
| .000 | .2523 | .2089 |
| 40.000 | .1432 | .0720 |

ALPHA ( 3) = 3.858 BETA ( 1) = -3.910 MACH = 1.2468 Q = 599.65 P = 551.10 RN/L = 3.0140

SECTION ( 1)BODY FLAP LOWER DEPENDENT VARIABLE CP

| X/LB | 1.0180 | 1.0460 |
|---|---|---|
| PHI | | |
| .000 | .3580 | .2891 |
| 40.000 | .2462 | .1599 |

ALPHA ( 3) = 3.859 BETA ( 2) = .139 MACH = 1.2468 Q = 599.65 P = 551.10 RN/L = 3.0140

SECTION ( 1)BODY FLAP LOWER DEPENDENT VARIABLE CP

| X/LB | 1.0180 | 1.0460 |
|---|---|---|
| PHI | | |
| .000 | .3548 | .2852 |
| 40.000 | .2238 | .1332 |

ALPHA ( 3) = 3.860 BETA ( 3) = 4.204 MACH = 1.2468 Q = 599.65 P = 551.10 RN/L = 3.0140

SECTION ( 1)BODY FLAP LOWER DEPENDENT VARIABLE CP

| X/LB | 1.0180 | 1.0460 |
|---|---|---|
| PHI | | |
| .000 | .3534 | .2842 |
| 40.000 | .2149 | .1253 |

ORIGINAL PAGE IS
OF POOR QUALITY

AMES 11-073(OA148) -140A/B/C/R ORB BODY FLAP LWR (XEBG02)

ALPHA ( 4) = 7.842 BETA ( 1) = -3.905 MACH = 1.2465 Q = 599.60 P = 551.34 RN/L = 3.0137

SECTION ( 1)BODY FLAP LOWER DEPENDENT VARIABLE CP

| X/LB | 1.0180 | 1.0460 |
|---|---|---|
| PHI | | |
| .000 | .4548 | .3502 |
| 40.000 | .3192 | .2020 |

ALPHA ( 4) = 7.841 BETA ( 2) = .143 MACH = 1.2465 Q = 599.60 P = 551.34 RN/L = 3.0137

SECTION ( 1)BODY FLAP LOWER DEPENDENT VARIABLE CP

| X/LB | 1.0180 | 1.0460 |
|---|---|---|
| PHI | | |
| .000 | .4522 | .3466 |
| 40.000 | .3085 | .1929 |

ALPHA ( 4) = 7.841 BETA ( 3) = 4.209 MACH = 1.2465 Q = 599.60 P = 551.34 RN/L = 3.0137

SECTION ( 1)BODY FLAP LOWER DEPENDENT VARIABLE CP

| X/LB | 1.0180 | 1.0460 |
|---|---|---|
| PHI | | |
| .000 | .4576 | .3522 |
| 40.000 | .3052 | .1953 |

ALPHA ( 5) = 11.942 BETA ( 1) = -3.887 MACH = 1.2452 Q = 599.20 P = 552.04 RN/L = 3.0172

SECTION ( 1)BODY FLAP LOWER DEPENDENT VARIABLE CP

| X/LB | 1.0180 | 1.0460 |
|---|---|---|
| PHI | | |
| .000 | .5420 | .4023 |
| 40.000 | .3910 | .2415 |

ALPHA ( 5) = 11.952 BETA ( 2) = .148 MACH = 1.2452 Q = 599.20 P = 552.04 RN/L = 3.0172

SECTION ( 1)BODY FLAP LOWER DEPENDENT VARIABLE CP

| X/LB | 1.0180 | 1.0460 |
|---|---|---|
| PHI | | |
| .000 | .5439 | .3395 |
| 40.000 | .3859 | .2355 |

AMES 11-073(OA148) -140A/B/C/R ORB BODY FLAP LWR (XE8G02)

ALPHA ( 5) = 11.946 BETA ( 3) = 4.215 MACH = 1.2452 Q = 599.20 P = 552.04 RN/L = 3.0172

SECTION ( 1)BODY FLAP LOWER DEPENDENT VARIABLE CP

| X/LB | 1.0180 | 1.0460 |
|---|---|---|
| PHI | | |
| .000 | .5439 | .4002 |
| 40.000 | .3760 | .2446 |

AMES 11-073(OA148) -140A/B/C/R ORB BODY FLAP LWR (XEB003) ( 05 AUG 75 )

REFERENCE DATA

SREF = 2690.0000 SQ.FT. XMRP = 1076.6800 IN. XO
LREF = 474.8000 IN. YMRP = .0000 IN. YO
BREF = 936.0660 IN. ZMRP = 375.0000 IN. ZO
SCALE = .0300

PARAMETRIC DATA

RUDDER = .000 SPDBRK = 55.000
BDFLAP = 16.300 L-ELVN = .000
R-ELVN = .000 MACH = 1.100

ALPHA ( 1) = -4.048 BETA ( 1) = -3.881 MACH = 1.0978 Q = 599.56 P = 710.72 RN/L = 3.1865

SECTION ( 1)BODY FLAP LOWER DEPENDENT VARIABLE CP

| X/LB | 1.0180 | 1.0460 |
|---|---|---|
| PHI | | |
| .000 | .2527 | .1724 |
| 40.000 | .0849 | .0535 |

ALPHA ( 1) = -4.035 BETA ( 2) = .153 MACH = 1.0978 Q = 599.56 P = 710.72 RN/L = 3.1865

SECTION ( 1)BODY FLAP LOWER DEPENDENT VARIABLE CP

| X/LB | 1.0180 | 1.0460 |
|---|---|---|
| PHI | | |
| .000 | .2594 | .1926 |
| 40.000 | .0995 | .0593 |

ALPHA ( 1) = -4.044 BETA ( 3) = 4.236 MACH = 1.0978 Q = 599.56 P = 710.72 RN/L = 3.1865

SECTION ( 1)BODY FLAP LOWER DEPENDENT VARIABLE CP

| X/LB | 1.0180 | 1.0460 |
|---|---|---|
| PHI | | |
| .000 | .2532 | .1647 |
| 40.000 | .0966 | .0393 |

ALPHA ( 2) = -.027 BETA ( 1) = -3.903 MACH = 1.0988 Q = 599.62 P = 709.54 RN/L = 3.1868

SECTION ( 1)BODY FLAP LOWER DEPENDENT VARIABLE CP

| X/LB | 1.0180 | 1.0460 |
|---|---|---|
| PHI | | |
| .000 | .2787 | .1994 |
| 40.000 | .1812 | .1093 |

DATE 13 FEB 76 TABULATED PRESSURE DATA - OA148 ( AMES 11-073-1 ) (XE8G03)

AMES 11-073(OA148) -140A/B/C/R ORB BODY FLAP LWR

ALPHA ( 2) = -.023 BETA ( 2) = .144 MACH = 1.0988 Q = 599.62 P = 709.54 RN/L = 3.1868

SECTION ( 1)BODY FLAP LOWER DEPENDENT VARIABLE CP

| X/LB | 1.0180 | 1.0460 |
|---|---|---|
| PHI | | |
| .000 | .3203 | .2153 |
| 40.000 | .1671 | .0844 |

ALPHA ( 2) = -.029 BETA ( 3) = 4.209 MACH = 1.0988 Q = 599.62 P = 709.54 RN/L = 3.1868

SECTION ( 1)BODY FLAP LOWER DEPENDENT VARIABLE CP

| X/LB | 1.0180 | 1.0460 |
|---|---|---|
| PHI | | |
| .000 | .2777 | .2003 |
| 40.000 | .1551 | .0617 |

ALPHA ( 3) = 3.893 BETA ( 1) = -3.903 MACH = 1.0982 Q = 599.43 P = 710.01 RN/L = 3.1855

SECTION ( 1)BODY FLAP LOWER DEPENDENT VARIABLE CP

| X/LB | 1.0180 | 1.0460 |
|---|---|---|
| PHI | | |
| .000 | .3654 | .2460 |
| 40.000 | .2544 | .1319 |

ALPHA ( 3) = 3.894 BETA ( 2) = .147 MACH = 1.0982 Q = 599.43 P = 710.01 RN/L = 3.1855

SECTION ( 1)BODY FLAP LOWER DEPENDENT VARIABLE CP

| X/LB | 1.0180 | 1.0460 |
|---|---|---|
| PHI | | |
| .000 | .3903 | .2511 |
| 40.000 | .2394 | .1154 |

ALPHA ( 3) = 3.895 BETA ( 3) = 4.201 MACH = 1.0982 Q = 599.43 P = 710.01 RN/L = 3.1855

SECTION ( 1)BODY FLAP LOWER DEPENDENT VARIABLE CP

| X/LB | 1.0180 | 1.0460 |
|---|---|---|
| PHI | | |
| .000 | .3644 | .2456 |
| 40.000 | .2072 | .0923 |

AMES 11-073(OA148) -140A/B/C/R ORB BODY FLAP LWR (XEBG03)

ALPHA ( 4) = 7.885 BETA ( 1) = -3.898 MACH = 1.0976 Q = 599.10 P = 710.48 RN/L = 3.1859

SECTION ( 1)BODY FLAP LOWER DEPENDENT VARIABLE CP

| X/LB | 1.0180 | 1.0460 |
|---|---|---|
| PHI | | |
| .000 | .4503 | .2842 |
| 40.000 | .3002 | .1421 |

ALPHA ( 4) = 7.885 BETA ( 2) = .144 MACH = 1.0976 Q = 599.10 P = 710.48 RN/L = 3.1859

SECTION ( 1)BODY FLAP LOWER DEPENDENT VARIABLE CP

| X/LB | 1.0180 | 1.0460 |
|---|---|---|
| PHI | | |
| .000 | .4595 | .2681 |
| 40.000 | .2976 | .1334 |

ALPHA ( 4) = 7.885 BETA ( 3) = 4.200 MACH = 1.0976 Q = 599.10 P = 710.48 RN/L = 3.1859

SECTION ( 1)BODY FLAP LOWER DEPENDENT VARIABLE CP

| X/LB | 1.0180 | 1.0460 |
|---|---|---|
| PHI | | |
| .000 | .4517 | .2833 |
| 40.000 | .2790 | .1248 |

ALPHA ( 5) = 11.990 BETA ( 1) = -3.881 MACH = 1.0978 Q = 599.38 P = 710.48 RN/L = 3.1856

SECTION ( 1)BODY FLAP LOWER DEPENDENT VARIABLE CP

| X/LB | 1.0180 | 1.0460 |
|---|---|---|
| PHI | | |
| .000 | .5295 | .3195 |
| 40.000 | .3693 | .1696 |

ALPHA ( 5) = 11.990 BETA ( 2) = .149 MACH = 1.0978 Q = 599.38 P = 710.48 RN/L = 3.1856

SECTION ( 1)BODY FLAP LOWER DEPENDENT VARIABLE CP

| X/LB | 1.0180 | 1.0460 |
|---|---|---|
| PHI | | |
| .000 | .5378 | .3238 |
| 40.000 | .3719 | .1662 |

AMES 11-073(OA148) -140A/B/C/R ORB BODY FLAP LWR (XEB303)

ALPHA ( 5) = 11.902 BETA ( 3) = 4.212 MACH = 1.0978 Q = 599.38 P = 710.43 RN/L = 3.1855

SECTION ( 1)BODY FLAP LOWER DEPENDENT VARIABLE CP

| X/LB | 1.0190 | 1.0460 |
|---|---|---|
| PHI | | |
| .000 | .5267 | .3178 |
| 40.000 | .3484 | .1493 |

ORIGINAL PAGE IS
OF POOR QUALITY

AMES 11-073(OA148) -140A/B/C/R ORB BODY FLAP LWR (XEBC04) ( 05 AUG 75 )

REFERENCE DATA

SREF = 2690.0000 SQ.FT. XMRP = 1076.6800 IN. XO
LREF = 474.8000 IN. YMRP = .0000 IN. YO
BREF = 936.0000 IN. ZMRP = 375.0000 IN. ZO
SCALE = .0300

PARAMETRIC DATA

RUDDER = .000 SPDBRK = 55.000
BDFLAP = 16.300 L-ELVN = .000
R-ELVN = .000 MACH = .900

ALPHA ( 1) = -4.058 BETA ( 1) = -3.880 MACH = .89913 Q = 599.67 P = 1059.7 RN/L = 3.5733

SECTION ( 1)BODY FLAP LOWER DEPENDENT VARIABLE CP

| X/LB | 1.0180 | 1.0460 |
|---|---|---|
| PHI | | |
| .000 | .2990 | .1045 |
| 40.000 | .1537 | .0175 |

ALPHA ( 1) = -4.035 BETA ( 2) = .153 MACH = .89913 Q = 599.67 P = 1059.7 RN/L = 3.5733

SECTION ( 1)BODY FLAP LOWER DEPENDENT VARIABLE CP

| X/LB | 1.0180 | 1.0460 |
|---|---|---|
| PHI | | |
| .000 | .3229 | .1159 |
| 40.000 | .1486 | .0174 |

ALPHA ( 1) = -4.047 BETA ( 3) = 4.237 MACH = .89913 Q = 599.67 P = 1059.7 RN/L = 3.5733

SECTION ( 1)BODY FLAP LOWER DEPENDENT VARIABLE CP

| X/LB | 1.0180 | 1.0460 |
|---|---|---|
| PHI | | |
| .000 | .2874 | .0959 |
| 40.000 | .1821 | -.0072 |

ALPHA ( 2) = -.025 BETA ( 1) = -3.907 MACH = .89827 Q = 599.10 P = 1060.7 RN/L = 3.5698

SECTION ( 1)BODY FLAP LOWER DEPENDENT VARIABLE CP

| X/LB | 1.0180 | 1.0460 |
|---|---|---|
| PHI | | |
| .000 | .2978 | .1012 |
| 40.000 | .1951 | .0345 |

AMES 11-073(OA148) -140A/B/C/R ORB BODY FLAP LWR (XEBG04)

ALPHA ( 2) = -.020 BETA ( 2) = .144 MACH = .89827 Q = 599.10 P = 1060.7 RN/L = 3.5698

SECTION ( 1)BODY FLAP LOWER DEPENDENT VARIABLE CP

| X/LB | 1.0180 | 1.0460 |
|---|---|---|
| PHI | | |
| .000 | .3206 | .1072 |
| 40.000 | .1831 | .0165 |

ALPHA ( 2) = -.027 BETA ( 3) = 4.215 MACH = .89827 Q = 599.10 P = 1060.7 RN/L = 3.5698

SECTION ( 1)BODY FLAP LOWER DEPENDENT VARIABLE CP

| X/LB | 1.0180 | 1.0460 |
|---|---|---|
| PHI | | |
| .000 | .2978 | .0968 |
| 40.000 | .1710 | -.0143 |

ALPHA ( 3) = 3.898 BETA ( 1) = -3.912 MACH = .89833 Q = 598.89 P = 1060.2 RN/L = 3.5704

SECTION ( 1)BODY FLAP LOWER DEPENDENT VARIABLE CP

| X/LB | 1.0180 | 1.0460 |
|---|---|---|
| PHI | | |
| .000 | .3498 | .1203 |
| 40.000 | .2247 | .0473 |

ALPHA ( 3) = 3.896 BETA ( 2) = .152 MACH = .89833 Q = 598.89 P = 1060.2 RN/L = 3.5704

SECTION ( 1)BODY FLAP LOWER DEPENDENT VARIABLE CP

| X/LB | 1.0180 | 1.0460 |
|---|---|---|
| PHI | | |
| .000 | .3521 | .1187 |
| 40.000 | .2197 | .0258 |

ALPHA ( 3) = 3.899 BETA ( 3) = 4.208 MACH = .89833 Q = 598.89 P = 1060.2 RN/L = 3.5704

SECTION ( 1)BODY FLAP LOWER DEPENDENT VARIABLE CP

| X/LB | 1.0180 | 1.0460 |
|---|---|---|
| PHI | | |
| .000 | .3510 | .1207 |
| 40.000 | .1991 | .0031 |

AMES 11-073(OA148) -140A/B/C/R ORB BODY FLAP LWR (XE8GD4)

ALPHA ( 4) = 7.895 BETA ( 1) = -3.903 MACH = .89900 Q = 599.51 P = 1059.7 RN/L = 3.5708

SECTION ( 1)BODY FLAP LOWER DEPENDENT VARIABLE CP

| X/LB | 1.0180 | 1.0460 |
|---|---|---|
| PHI | | |
| .000 | .3922 | .1354 |
| 40.000 | .2581 | .0572 |

ALPHA ( 4) = 7.900 BETA ( 2) = .140 MACH = .89900 Q = 599.51 P = 1059.7 RN/L = 3.5708

SECTION ( 1)BODY FLAP LOWER DEPENDENT VARIABLE CP

| X/LB | 1.0180 | 1.0460 |
|---|---|---|
| PHI | | |
| .000 | .3906 | .1336 |
| 40.000 | .2434 | .0289 |

ALPHA ( 4) = 7.897 BETA ( 3) = 4.209 MACH = .89900 Q = 599.51 P = 1059.7 RN/L = 3.5708

SECTION ( 1)BODY FLAP LOWER DEPENDENT VARIABLE CP

| X/LB | 1.0180 | 1.0460 |
|---|---|---|
| PHI | | |
| .000 | .3927 | .1304 |
| 40.000 | .2235 | .0052 |

ALPHA ( 5) = 11.985 BETA ( 1) = -3.890 MACH = .89830 Q = 599.10 P = 1060.7 RN/L = 3.5735

SECTION ( 1)BODY FLAP LOWER DEPENDENT VARIABLE CP

| X/LB | 1.0180 | 1.0460 |
|---|---|---|
| PHI | | |
| .000 | .4205 | .1384 |
| 40.000 | .2755 | .0414 |

ALPHA ( 5) = 11.993 BETA ( 2) = .152 MACH = .89830 Q = 599.10 P = 1060.7 RN/L = 3.5735

SECTION ( 1)BODY FLAP LOWER DEPENDENT VARIABLE CP

| X/LB | 1.0180 | 1.0460 |
|---|---|---|
| PHI | | |
| .000 | .4168 | .1419 |
| 40.000 | .2584 | .0231 |

AMES 11-073(OA148) -140A/B/C/R ORB BODY FLAP LWR (XE8G04)

ALPHA ( 5) = 11.982 BETA ( 3) = 4.222 MACH = .89830 Q = 599.10 P = 1060.7 RN/L = 3.5735

SECTION ( 1)BODY FLAP LOWER DEPENDENT VARIABLE CP

| X/LB | 1.0180 | 1.0460 |
|---|---|---|
| PHI | | |
| .000 | .4161 | .1359 |
| 40.000 | .2457 | -.0033 |

AMES 11-073(OA148) -140A/B/C/R ORB BODY FLAP LWR (XE8G05) ( 05 AUG 75 )

REFERENCE DATA

SREF = 2690.0000 SQ.FT. XMRP = 1076.6800 IN. XO
LREF = 474.8000 IN. YMRP = .0000 IN. YO
BREF = 936.0690 IN. ZMRP = 375.0000 IN. ZO
SCALE = .0300

PARAMETRIC DATA

RUDDER = .000 SPDBRK = 55.000
BDFLAP = 16.300 L-ELVN = .000
R-ELVN = .000 MACH = .600

ALPHA ( 1) = -3.996 BETA ( 1) = -7.893 MACH = .59580 Q = 593.15 P = 2387.2 RN/L = 4.8118

SECTION ( 1)BODY FLAP LOWER DEPENDENT VARIABLE CP

| X/LB | 1.0180 | 1.0460 |
|---|---|---|
| PHI | | |
| .000 | .2338 | .0140 |
| 40.000 | .1430 | -.0216 |

ALPHA ( 1) = -3.981 BETA ( 2) = -3.877 MACH = .59580 Q = 593.15 P = 2387.2 RN/L = 4.8118

SECTION ( 1)BODY FLAP LOWER DEPENDENT VARIABLE CP

| X/LB | 1.0180 | 1.0460 |
|---|---|---|
| PHI | | |
| .000 | .2457 | .0184 |
| 40.000 | .1439 | -.0384 |

ALPHA ( 1) = -3.973 BETA ( 3) = .156 MACH = .59580 Q = 593.15 P = 2387.2 RN/L = 4.8118

SECTION ( 1)BODY FLAP LOWER DEPENDENT VARIABLE CP

| X/LB | 1.0180 | 1.0460 |
|---|---|---|
| PHI | | |
| .000 | .2629 | .0227 |
| 40.000 | .1250 | -.0459 |

ALPHA ( 1) = -3.981 BETA ( 4) = 4.231 MACH = .59580 Q = 593.15 P = 2387.2 RN/L = 4.8118

SECTION ( 1)BODY FLAP LOWER DEPENDENT VARIABLE CP

| X/LB | 1.0180 | 1.0460 |
|---|---|---|
| PHI | | |
| .000 | .2326 | .0107 |
| 40.000 | .1381 | -.0537 |

AMES 11-073(OA148) -140A/B/C/R ORB BODY FLAP LWR (XE8G05)

ALPHA ( 1) = -3.995 BETA ( 5) = 8.308 MACH = .59580 Q = 593.15 P = 2387.2 RN/L = 4.8118

SECTION ( 1)BODY FLAP LOWER DEPENDENT VARIABLE CP

| X/LB | 1.0180 | 1.0460 |
|---|---|---|
| PHI | | |
| .000 | .2325 | .0023 |
| 40.000 | .1166 | -.0733 |

ALPHA ( 2) = -.001 BETA ( 1) = -7.930 MACH = .59552 Q = 592.56 P = 2387.2 RN/L = 4.8092

SECTION ( 1)BODY FLAP LOWER DEPENDENT VARIABLE CP

| X/LB | 1.0180 | 1.0460 |
|---|---|---|
| PHI | | |
| .000 | .2651 | .0218 |
| 40.000 | .1750 | -.0193 |

ALPHA ( 2) = .008 BETA ( 2) = -3.896 MACH = .59552 Q = 592.56 P = 2387.2 RN/L = 4.8092

SECTION ( 1)BODY FLAP LOWER DEPENDENT VARIABLE CP

| X/LB | 1.0180 | 1.0460 |
|---|---|---|
| PHI | | |
| .000 | .2524 | .0182 |
| 40.000 | .1652 | -.0351 |

ALPHA ( 2) = .009 BETA ( 3) = .144 MACH = .59552 Q = 592.56 P = 2387.2 RN/L = 4.8092

SECTION ( 1)BODY FLAP LOWER DEPENDENT VARIABLE CP

| X/LB | 1.0180 | 1.0460 |
|---|---|---|
| PHI | | |
| .000 | .2575 | .0229 |
| 40.000 | .1442 | -.0467 |

ALPHA ( 2) = .008 BETA ( 4) = 4.214 MACH = .59552 Q = 592.56 P = 2387.2 RN/L = 4.8092

SECTION ( 1)BODY FLAP LOWER DEPENDENT VARIABLE CP

| X/LB | 1.0180 | 1.0460 |
|---|---|---|
| PHI | | |
| .000 | .2564 | .0158 |
| 40.000 | .1330 | -.0590 |

AMES 11-073(OA148) -140A/B/C/R ORB BODY FLAP LWR (XE8G05)

ALPHA ( 2) = .003 BETA ( 5) = 8.269 MACH = .59552 Q = 592.56 P = 2387.2 RN/L = 4.8092

SECTION ( 1)BODY FLAP LOWER DEPENDENT VARIABLE CP

| X/LB | 1.0180 | 1.0460 |
|---|---|---|
| PHI | | |
| .000 | .2644 | .0102 |
| 40.000 | .1196 | -.0646 |

ALPHA ( 3) = 3.907 BETA ( 1) = -7.936 MACH = .59500 Q = 591.74 P = 2387.9 RN/L = 4.8063

SECTION ( 1)BODY FLAP LOWER DEPENDENT VARIABLE CP

| X/LB | 1.0180 | 1.0460 |
|---|---|---|
| PHI | | |
| .000 | .2678 | .0283 |
| 40.000 | .1999 | -.0192 |

ALPHA ( 3) = 3.912 BETA ( 2) = -3.897 MACH = .59500 Q = 591.74 P = 2387.9 RN/L = 4.8063

SECTION ( 1)BODY FLAP LOWER DEPENDENT VARIABLE CP

| X/LB | 1.0180 | 1.0460 |
|---|---|---|
| PHI | | |
| .000 | .2787 | .0319 |
| 40.000 | .1842 | -.0264 |

ALPHA ( 3) = 3.909 BETA ( 3) = .143 MACH = .59500 Q = 591.74 P = 2387.9 RN/L = 4.8063

SECTION ( 1)BODY FLAP LOWER DEPENDENT VARIABLE CP

| X/LB | 1.0180 | 1.0460 |
|---|---|---|
| PHI | | |
| .000 | .2754 | .0210 |
| 40.000 | .1617 | -.0397 |

ALPHA ( 3) = 3.918 BETA ( 4) = 4.207 MACH = .59500 Q = 591.74 P = 2387.9 RN/L = 4.8063

SECTION ( 1)BODY FLAP LOWER DEPENDENT VARIABLE CP

| X/LB | 1.0180 | 1.0460 |
|---|---|---|
| PHI | | |
| .000 | .2789 | .0212 |
| 40.000 | .1426 | -.0492 |

AMES 11-073(OA148) -140A/B/C/R ORB BODY FLAP LWR (XE8G05)

ALPHA ( 3) = 3.922 BETA ( 5) = 8.252 MACH = .59500 Q = 591.74 P = 2387.9 RN/L = 4.8063

SECTION ( 1)BODY FLAP LOWER DEPENDENT VARIABLE CP

| X/LB | 1.0180 | 1.0460 |
|---|---|---|
| PHI | | |
| .000 | .2871 | .0184 |
| 40.000 | .1406 | -.0456 |

ALPHA ( 4) = 7.956 BETA ( 1) = -7.918 MACH = .59428 Q = 590.57 P = 2388.9 RN/L = 4.8012

SECTION ( 1)BODY FLAP LOWER DEPENDENT VARIABLE CP

| X/LB | 1.0180 | 1.0460 |
|---|---|---|
| PHI | | |
| .000 | .3090 | .0335 |
| 40.000 | .2054 | -.0093 |

ALPHA ( 4) = 7.965 BETA ( 2) = -3.894 MACH = .59428 Q = 590.57 P = 2388.9 RN/L = 4.8012

SECTION ( 1)BODY FLAP LOWER DEPENDENT VARIABLE CP

| X/LB | 1.0180 | 1.0460 |
|---|---|---|
| PHI | | |
| .000 | .3046 | .0359 |
| 40.000 | .1983 | -.0258 |

ALPHA ( 4) = 7.970 BETA ( 3) = .145 MACH = .59428 Q = 590.57 P = 2388.9 RN/L = 4.8012

SECTION ( 1)BODY FLAP LOWER DEPENDENT VARIABLE CP

| X/LB | 1.0180 | 1.0460 |
|---|---|---|
| PHI | | |
| .000 | .3028 | .0365 |
| 40.000 | .1820 | -.0284 |

ALPHA ( 4) = 7.969 BETA ( 4) = 4.201 MACH = .59428 Q = 590.57 P = 2388.9 RN/L = 4.8012

SECTION ( 1)BODY FLAP LOWER DEPENDENT VARIABLE CP

| X/LB | 1.0180 | 1.0460 |
|---|---|---|
| PHI | | |
| .000 | .3068 | .0371 |
| 40.000 | .1562 | -.0296 |

ORIGINAL PAGE IS
OF POOR QUALITY

AMES 11-073(OA148) -140A/B/C/R OR3 BODY FLAP LWR (XEB005)

ALPHA ( 4) = 7.967 BETA ( 5) = 8.254 MACH = .59428 Q = 590.57 P = 2388.9 RN/L = 4.8012

SECTION ( 1)BODY FLAP LOWER DEPENDENT VARIABLE CP

| X/LB | 1.0180 | 1.0460 |
|---|---|---|
| PHI | | |
| .000 | .3083 | .0244 |
| 40.000 | .1569 | -.0455 |

ALPHA ( 5) = 12.002 BETA ( 1) = -7.881 MACH = .59502 Q = 591.86 P = 2388.2 RN/L = 4.8047

SECTION ( 1)BODY FLAP LOWER DEPENDENT VARIABLE CP

| X/LB | 1.0180 | 1.0460 |
|---|---|---|
| PHI | | |
| .000 | .3303 | .0473 |
| 40.000 | .2211 | -.0020 |

ALPHA ( 5) = 12.020 BETA ( 2) = -3.874 MACH = .59502 Q = 591.86 P = 2388.2 RN/L = 4.8047

SECTION ( 1)BODY FLAP LOWER DEPENDENT VARIABLE CP

| X/LB | 1.0180 | 1.0460 |
|---|---|---|
| PHI | | |
| .000 | .3318 | .0552 |
| 40.000 | .2155 | -.0069 |

ALPHA ( 5) = 12.028 BETA ( 3) = .150 MACH = .59502 Q = 591.86 P = 2388.2 RN/L = 4.8047

SECTION ( 1)BODY FLAP LOWER DEPENDENT VARIABLE CP

| X/LB | 1.0180 | 1.0460 |
|---|---|---|
| PHI | | |
| .000 | .3350 | .0571 |
| 40.000 | .2017 | -.0151 |

ALPHA ( 5) = 12.028 BETA ( 4) = 4.211 MACH = .59502 Q = 591.86 P = 2388.2 RN/L = 4.8047

SECTION ( 1)BODY FLAP LOWER DEPENDENT VARIABLE CP

| X/LB | 1.0180 | 1.0460 |
|---|---|---|
| PHI | | |
| .000 | .3268 | .0489 |
| 40.000 | .1867 | -.0269 |

AMES 11-073(OA148) -140A/B/C/R ORB BODY FLAP LWR (XEBG05)

ALPHA ( 5) = 12.020 BETA ( 5) = 8.278 MACH = .59502 Q = 591.86 P = 2388.2 RN/L = 4.8047

SECTION ( 1)BODY FLAP LOWER DEPENDENT VARIABLE CP

| X/LB | 1.0180 | 1.0460 |
|---|---|---|
| PHI | | |
| .000 | .3284 | .0424 |
| 40.000 | .1763 | -.0393 |

AMES 11-073(OA14B) -140A/B/C/R ORB BODY FLAP LWR (XE8606) ( 05 AUG 75 )

REFERENCE DATA

SREF = 2690.0000 SQ.FT. XMRP = 1076.6800 IN. XO
LREF = 474.8000 IN. YMRP = .0000 IN. YO
BREF = 936.0580 IN. ZMRP = 375.0000 IN. ZO
SCALE = .0300

PARAMETRIC DATA

RUDDER = .000 SPDBRK = 55.000
BDFLAP = 22.500 L-ELVN = .000
R-ELVN = .000 MACH = .600

ALPHA ( 1) = -4.026 BETA ( 1) = -7.883 MACH = .59594 Q = 593.39 P = 2387.0 RN/L = 4.8396

SECTION ( 1)BODY FLAP LOWER DEPENDENT VARIABLE CP

| X/LB | 1.0180 | 1.0460 |
|---|---|---|
| PHI | | |
| .000 | .3439 | .1018 |
| 40.000 | .2512 | .0466 |

ALPHA ( 1) = -4.010 BETA ( 2) = -3.877 MACH = .59594 Q = 593.39 P = 2387.0 RN/L = 4.8396

SECTION ( 1)BODY FLAP LOWER DEPENDENT VARIABLE CP

| X/LB | 1.0180 | 1.0460 |
|---|---|---|
| PHI | | |
| .000 | .3633 | .1064 |
| 40.000 | .2588 | .0446 |

ALPHA ( 1) = -3.994 BETA ( 3) = .154 MACH = .59594 Q = 593.39 P = 2387.0 RN/L = 4.8396

SECTION ( 1)BODY FLAP LOWER DEPENDENT VARIABLE CP

| X/LB | 1.0180 | 1.0460 |
|---|---|---|
| PHI | | |
| .000 | .3820 | .1090 |
| 40.000 | .2334 | .0309 |

ALPHA ( 1) = -4.001 BETA ( 4) = 4.235 MACH = .59594 Q = 593.39 P = 2387.0 RN/L = 4.8396

SECTION ( 1)BODY FLAP LOWER DEPENDENT VARIABLE CP

| X/LB | 1.0180 | 1.0460 |
|---|---|---|
| PHI | | |
| .000 | .3511 | .1014 |
| 40.000 | .2475 | .0141 |

AMES 11-073(OA148) -140A/B/C/R ORB BODY FLAP LWR (X58GDB)

ALPHA ( 1) = -4.013 BETA ( 5) = 8.308 MACH = .59594 Q = 593.39 P = 2387.0 RN/L = 4.8396

SECTION ( 1)BODY FLAP LOWER DEPENDENT VARIABLE CP

| X/LB | 1.0180 | 1.0460 |
|---|---|---|
| PHI | | |
| .000 | .3392 | .0932 |
| 40.000 | .2177 | -.0001 |

ALPHA ( 2) = .023 BETA ( 1) = -7.929 MACH = .59530 Q = 593.84 P = 2385.7 RN/L = 4.8179

SECTION ( 1)BODY FLAP LOWER DEPENDENT VARIABLE CP

| X/LB | 1.0180 | 1.0460 |
|---|---|---|
| PHI | | |
| .000 | .3919 | .1090 |
| 40.000 | .2947 | .0597 |

ALPHA ( 2) = .033 BETA ( 2) = -3.896 MACH = .59630 Q = 593.84 P = 2385.7 RN/L = 4.8179

SECTION ( 1)BODY FLAP LOWER DEPENDENT VARIABLE CP

| X/LB | 1.0180 | 1.0460 |
|---|---|---|
| PHI | | |
| .000 | .3653 | .1073 |
| 40.000 | .2877 | .0472 |

ALPHA ( 2) = .035 BETA ( 3) = .147 MACH = .59630 Q = 593.84 P = 2385.7 RN/L = 4.8179

SECTION ( 1)BODY FLAP LOWER DEPENDENT VARIABLE CP

| X/LB | 1.0180 | 1.0460 |
|---|---|---|
| PHI | | |
| .000 | .3778 | .1129 |
| 40.000 | .2555 | .0317 |

ALPHA ( 2) = .050 BETA ( 4) = 4.214 MACH = .59630 Q = 593.84 P = 2385.7 RN/L = 4.8179

SECTION ( 1)BODY FLAP LOWER DEPENDENT VARIABLE CP

| X/LB | 1.0180 | 1.0460 |
|---|---|---|
| PHI | | |
| .000 | .3693 | .1099 |
| 40.000 | .2357 | .0105 |

AMES 11-073(OA148) -140A/B/C/R ORB BODY FLAP LWR (XEBGD6)

ALPHA ( 2) = .045 BETA ( 5) = 8.269 MACH = .59630 Q = 593.84 P = 2385.7 RN/L = 4.8179

SECTION ( 1)BODY FLAP LOWER DEPENDENT VARIABLE CP

| X/LB | 1.0161 | 1.0460 |
|---|---|---|
| PHI | | |
| .000 | .3875 | .1038 |
| 40.000 | .2233 | .0066 |

ALPHA ( 3) = 3.911 BETA ( 1) = -7.932 MACH = .59594 Q = 593.13 P = 2385.8 RN/L = 4.8146

SECTION ( 1)BODY FLAP LOWER DEPENDENT VARIABLE CP

| X/LB | 1.0160 | 1.0460 |
|---|---|---|
| PHI | | |
| .000 | .4223 | .1167 |
| 40.000 | .3242 | .0349 |

ALPHA ( 31 = 3.915 BETA ( 2) = -3.897 MACH = .59594 Q = 593.13 P = 2385.8 RN/L = 4.8146

SECTION ( 1)BODY FLAP LOWER DEPENDENT VARIABLE CP

| X/LB | 1.0190 | 1.0460 |
|---|---|---|
| PHI | | |
| .000 | .4013 | .1207 |
| 40.000 | .3136 | .0517 |

ALPHA ( 31 = 3.912 BETA ( 31 = .150 MACH = .59594 Q = 593.13 P = 2385.8 RN/L = 4.8146

SECTION ( 1)BODY FLAP LOWER DEPENDENT VARIABLE CP

| X/LB | 1.0190 | 1.0460 |
|---|---|---|
| PHI | | |
| .000 | .4019 | .1166 |
| 40.000 | .2806 | .0357 |

ALPHA ( 31 = 3.921 BETA ( 41 = 4.204 MACH = .59594 Q = 593.13 P = 2385.8 RN/L = 4.8146

SECTION ( 1)BODY FLAP LOWER DEPENDENT VARIABLE CP

| X/LB | 1.0190 | 1.0460 |
|---|---|---|
| PHI | | |
| .000 | .4044 | .1149 |
| 40.000 | .2639 | .0232 |

AMES 11-073(OA148) -140A/B/C/R ORB BODY FLAP LWR (XEBGCB)

ALPHA ( 3) = 3.925 BETA ( 5) = 8.248 MACH = .59594 Q = 593.13 P = 2335.16 RN/L = 4.8146

SECTION ( 1)BODY FLAP LOWER DEPENDENT VARIABLE CP

| X/LB | 1.0180 | 1.0460 |
|---|---|---|
| PHI | | |
| .000 | .4173 | .1041 |
| 40.000 | .2529 | .0172 |

ALPHA ( 4) = 7.957 BETA ( 1) = -7.908 MACH = .59612 Q = 593.49 P = 2385.7 RN/L = 4.8178

SECTION ( 1)BODY FLAP LOWER DEPENDENT VARIABLE CP

| X/LB | 1.0180 | 1.0460 |
|---|---|---|
| PHI | | |
| .000 | .4467 | .1269 |
| 40.000 | .3438 | .0745 |

ALPHA ( 4) = 7.966 BETA ( 2) = -3.891 MACH = .59612 Q = 593.49 P = 2385.7 RN/L = 4.8178

SECTION ( 1)BODY FLAP LOWER DEPENDENT VARIABLE CP

| X/LB | 1.0180 | 1.0460 |
|---|---|---|
| PHI | | |
| .000 | .4398 | .1326 |
| 40.000 | .3295 | .0628 |

ALPHA ( 4) = 7.972 BETA ( 3) = .143 MACH = .59612 Q = 593.49 P = 2385.7 RN/L = 4.8178

SECTION ( 1)BODY FLAP LOWER DEPENDENT VARIABLE CP

| X/LB | 1.0180 | 1.0460 |
|---|---|---|
| PHI | | |
| .000 | .4411 | .1299 |
| 40.000 | .3086 | .0438 |

ALPHA ( 4) = 7.971 BETA ( 4) = 4.201 MACH = .59612 Q = 593.49 P = 2385.7 RN/L = 4.8178

SECTION ( 1)BODY FLAP LOWER DEPENDENT VARIABLE CP

| X/LB | 1.0180 | 1.0460 |
|---|---|---|
| PHI | | |
| .000 | .4380 | .1274 |
| 40.000 | .2282 | .0353 |

AMES 11-073(OA14B) -140A/B/C/R ORB BODY FLAP LWR (XEBG06)

ALPHA ( 4) = 7.959 BETA ( 5) = 8.255 MACH = .59612 Q = 593.49 P = 2385.7 RN/L = 4.8178

SECTION ( 1)BODY FLAP LOWER DEPENDENT VARIABLE CP

| X/LB | 1.0180 | 1.0460 |
|---|---|---|
| PHI | | |
| .000 | .4435 | .1165 |
| 40.000 | .2747 | .0165 |

ALPHA ( 5) = 12.008 BETA ( 1) = -7.872 MACH = .47710 Q = 475.06 P = 1908.1 RN/L = 3.8563

SECTION ( 1)BODY FLAP LOWER DEPENDENT VARIABLE CP

| X/LB | 1.0180 | 1.0460 |
|---|---|---|
| PHI | | |
| .000 | .4715 | .1414 |
| 40.000 | .3563 | .0632 |

ALPHA ( 5) = 12.030 BETA ( 2) = -3.872 MACH = .47710 Q = 475.06 P = 1908.1 RN/L = 3.8563

SECTION ( 1)BODY FLAP LOWER DEPENDENT VARIABLE CP

| X/LB | 1.0180 | 1.0460 |
|---|---|---|
| PHI | | |
| .000 | .4675 | .1472 |
| 40.000 | .3432 | .0738 |

ALPHA ( 5) = 12.036 BETA ( 3) = .140 MACH = .47710 Q = 475.06 P = 1908.1 RN/L = 3.8563

SECTION ( 1)BODY FLAP LOWER DEPENDENT VARIABLE CP

| X/LB | 1.0180 | 1.0460 |
|---|---|---|
| PHI | | |
| .000 | .4654 | .1438 |
| 40.000 | .3229 | .0595 |

ALPHA ( 5) = 11.949 BETA ( 4) = 4.211 MACH = .47710 Q = 475.06 P = 1908.1 RN/L = 3.8563

SECTION ( 1)BODY FLAP LOWER DEPENDENT VARIABLE CP

| X/LB | 1.0180 | 1.0460 |
|---|---|---|
| PHI | | |
| .000 | .4643 | .1401 |
| 40.000 | .3099 | .0396 |

AMES 11-073(OA148) -140A/B/C/R ORB BODY FLAP LWR (XE8G06)

ALPHA ( 5) = 12.026 BETA ( 5) = 8.275 MACH = .47710 Q = 475.06 P = 1908.1 RN/L = 3.8563

SECTION ( 1)BODY FLAP LOWER DEPENDENT VARIABLE CP

| X/LB | 1.0180 | 1.0460 |
|---|---|---|
| PHI | | |
| .000 | .4687 | .1331 |
| 40.000 | .2926 | .0209 |

AMES 11-073(OA148) -140A/B/C/R ORB BODY FLAP LWR (XE8G07) ( 06 AUG 75 )

REFERENCE DATA

SREF = 2690.0000 SQ.FT. XMRP = 1076.6800 IN. XO
LREF = 474.8000 IN. YMRP = .0000 IN. YO
BREF = 936.0680 IN. ZMRP = 375.0000 IN. ZO
SCALE = .0300

PARAMETRIC DATA

RUDDER = .000 SPDBRK = 55.000
BDFLAP = 22.500 L-ELVN = .000
R-ELVN = .000 MACH = .900

ALPHA ( 1) = -4.068 BETA ( 1) = -3.876 MACH = .89933 Q = 599.81 P = 1059.5 RN/L = 3.5834

SECTION ( 1)BODY FLAP LOWER DEPENDENT VARIABLE CP

| X/LB | 1.0180 | 1.0460 |
|---|---|---|
| PHI | | |
| .000 | .3989 | .2273 |
| 40.000 | .2203 | .1282 |

ALPHA ( 1) = -4.048 BETA ( 2) = .153 MACH = .89933 Q = 599.81 P = 1059.5 RN/L = 3.5834

SECTION ( 1)BODY FLAP LOWER DEPENDENT VARIABLE CP

| X/LB | 1.0180 | 1.0460 |
|---|---|---|
| PHI | | |
| .000 | .4234 | .2389 |
| 40.000 | .2630 | .1234 |

ALPHA ( 1) = -4.057 BETA ( 3) = 4.237 MACH = .89933 Q = 599.81 P = 1059.5 RN/L = 3.5834

SECTION ( 1)BODY FLAP LOWER DEPENDENT VARIABLE CP

| X/LB | 1.0180 | 1.0460 |
|---|---|---|
| PHI | | |
| .000 | .3928 | .2179 |
| 40.000 | .2929 | .0968 |

ALPHA ( 2) = .010 BETA ( 1) = -3.903 MACH = .90060 Q = 601.03 P = 1058.5 RN/L = 3.5880

SECTION ( 1)BODY FLAP LOWER DEPENDENT VARIABLE CP

| X/LB | 1.0180 | 1.0460 |
|---|---|---|
| PHI | | |
| .000 | .3746 | .2205 |
| 40.000 | .2918 | .1484 |

AMES 11-073(OA148) -140A/B/C/R ORB BODY FLAP LWR (XE8G07)

ALPHA ( 2) = .014 BETA ( 2) = .148 MACH = .90060 Q = 601.03 P = 1058.5 RN/L = 3.5880

SECTION ( 1)BODY FLAP LOWER DEPENDENT VARIABLE CP

| X/LB | 1.0180 | 1.0460 |
|---|---|---|
| PHI | | |
| .000 | .4199 | .2321 |
| 40.000 | .2837 | .1268 |

ALPHA ( 2) = .013 BETA ( 3) = 4.211 MACH = .90060 Q = 601.03 P = 1058.5 RN/L = 3.5880

SECTION ( 1)BODY FLAP LOWER DEPENDENT VARIABLE CP

| X/LB | 1.0180 | 1.0460 |
|---|---|---|
| PHI | | |
| .000 | .3915 | .2212 |
| 40.000 | .2865 | .0962 |

ALPHA ( 3) = 3.998 BETA ( 1) = -3.905 MACH = .90070 Q = 600.82 P = 1058.0 RN/L = 3.5882

SECTION ( 1)BODY FLAP LOWER DEPENDENT VARIABLE CP

| X/LB | 1.0180 | 1.0460 |
|---|---|---|
| PHI | | |
| .000 | .4532 | .2446 |
| 40.000 | .3667 | .1622 |

ALPHA ( 3) = 4.002 BETA ( 2) = .135 MACH = .90070 Q = 600.82 P = 1058.0 RN/L = 3.5882

SECTION ( 1)BODY FLAP LOWER DEPENDENT VARIABLE CP

| X/LB | 1.0180 | 1.0460 |
|---|---|---|
| PHI | | |
| .000 | .4570 | .2395 |
| 40.000 | .3358 | .1262 |

ALPHA ( 3) = 3.920 BETA ( 3) = 4.206 MACH = .90070 Q = 600.82 P = 1058.0 RN/L = 3.5882

SECTION ( 1)BODY FLAP LOWER DEPENDENT VARIABLE CP

| X/LB | 1.0180 | 1.0460 |
|---|---|---|
| PHI | | |
| .000 | .4597 | .2437 |
| 40.000 | .3126 | .1026 |

ORIGINAL PAGE IS OF POOR QUALITY

AMES 11-073(OA14B) -140A/B/C/R ORB BODY FLAP LWR (XE8G07)

ALPHA ( 4) = 7.946 BETA ( 1) = -3.900 MACH = .89867 Q = 599.20 P = 1059.9 RN/L = 3.5837

SECTION ( 1)BODY FLAP LOWER DEPENDENT VARIABLE CP

| X/LB | 1.0180 | 1.0460 |
|---|---|---|
| PHI | | |
| .000 | .5123 | .2585 |
| 40.000 | .4057 | .1616 |

ALPHA ( 4) = 7.956 BETA ( 2) = .143 MACH = .89867 Q = 599.20 P = 1059.9 RN/L = 3.5837

SECTION ( 1)BODY FLAP LOWER DEPENDENT VARIABLE CP

| X/LB | 1.0180 | 1.0460 |
|---|---|---|
| PHI | | |
| .000 | .5106 | .2541 |
| 40.000 | .3708 | .1305 |

ALPHA ( 4) = 7.955 BETA ( 3) = 4.206 MACH = .89867 Q = 599.20 P = 1059.9 RN/L = 3.5837

SECTION ( 1)BODY FLAP LOWER DEPENDENT VARIABLE CP

| X/LB | 1.0180 | 1.0460 |
|---|---|---|
| PHI | | |
| .000 | .5102 | .2501 |
| 40.000 | .3466 | .0970 |

ALPHA ( 5) = 11.987 BETA ( 1) = -3.885 MACH = .89947 Q = 599.98 P = 1059.5 RN/L = 3.5879

SECTION ( 1)BODY FLAP LOWER DEPENDENT VARIABLE CP

| X/LB | 1.0180 | 1.0460 |
|---|---|---|
| PHI | | |
| .000 | .5581 | .2651 |
| 40.000 | .4255 | .1552 |

ALPHA ( 5) = 11.997 BETA ( 2) = .148 MACH = .89947 Q = 599.98 P = 1059.5 RN/L = 3.5879

SECTION ( 1)BODY FLAP LOWER DEPENDENT VARIABLE CP

| X/LB | 1.0180 | 1.0460 |
|---|---|---|
| PHI | | |
| .000 | .5576 | .2634 |
| 40.000 | .4030 | .1234 |

AMES 11-073(OA148) -140A/B/C/R ORB BODY FLAP LWR (XEB007)

ALPHA ( 5) = 11.987 BETA ( 3) = 4.223 MACH = .89947 Q = 599.98 P = 1059.5 RN/L = 3.5879

SECTION ( 1)BODY FLAP LOWER DEPENDENT VARIABLE CP

| X/LB | 1.0180 | 1.0460 |
|---|---|---|
| PHI | | |
| .000 | .5592 | .2681 |
| 40.000 | .3800 | .1061 |

AMES 11-073(OA148) -140A/B/C/R ORB BODY FLAP LWR (XE8G08) ( 05 AUG 75 )

REFERENCE DATA

SREF = 2690.0000 SQ.FT. XMRP = 1076.6800 IN. XO
LREF = 474.8000 IN. YMRP = .0000 IN. YO
BREF = 936.0690 IN. ZMRP = 375.0000 IN. ZO
SCALE = .0300

PARAMETRIC DATA

RUDDER = .000 SPDBRK = 85.000
BDFLAP = 22.500 L-ELVN = .000
R-ELVN = .000 MACH = 1.400

ALPHA ( 1) = -4.017 BETA ( 1) = -3.884 MACH = 1.3953 Q = 598.61 P = 439.24 RN/L = 2.9156

SECTION ( 1)BODY FLAP LOWER DEPENDENT VARIABLE CP

| X/LB | 1.0180 | 1.0460 |
|---|---|---|
| PHI | | |
| .000 | .1944 | .3093 |
| 40.000 | .0816 | .1287 |

ALPHA ( 1) = -3.966 BETA ( 2) = .155 MACH = 1.3953 Q = 598.61 P = 439.24 RN/L = 2.9166

SECTION ( 1)BODY FLAP LOWER DEPENDENT VARIABLE CP

| X/LB | 1.0180 | 1.0460 |
|---|---|---|
| PHI | | |
| .000 | .1771 | .2825 |
| 40.000 | .1592 | .1845 |

ALPHA ( 1) = -4.012 BETA ( 3) = 4.241 MACH = 1.3953 Q = 598.61 P = 439.24 RN/L = 2.9166

SECTION ( 1)BODY FLAP LOWER DEPENDENT VARIABLE CP

| X/LB | 1.0180 | 1.0460 |
|---|---|---|
| PHI | | |
| .000 | .1943 | .2993 |
| 40.000 | .1403 | .1812 |

ALPHA ( 2) = -.007 BETA ( 1) = -3.899 MACH = 1.3961 Q = 598.93 P = 439.00 RN/L = 2.9175

SECTION ( 1)BODY FLAP LOWER DEPENDENT VARIABLE CP

| X/LB | 1.0180 | 1.0460 |
|---|---|---|
| PHI | | |
| .000 | .2501 | .3259 |
| 40.000 | .2231 | .2262 |

DATE 13 FEB 76 TABULATED PRESSURE DATA - OA148 ( AMES 11-073-1 )

AMES 11-073(OA148) -140A/B/C/R ORB BODY FLAP LWR (XE8G08)

ALPHA ( 2) = -.001 BETA ( 2) = .155 MACH = 1.3961 Q = 598.93 P = 439.00 RN/L = 2.9179

SECTION ( 1)BODY FLAP LOWER DEPENDENT VARIABLE CP

| X/LB | 1.0180 | 1.0460 |
|---|---|---|
| PHI | | |
| .000 | .2467 | .3269 |
| 40.000 | .2027 | .2238 |

ALPHA ( 2) = -.006 BETA ( 3) = 4.218 MACH = 1.3961 Q = 598.93 P = 439.00 RN/L = 2.9179

SECTION ( 1)BODY FLAP LOWER DEPENDENT VARIABLE CP

| X/LB | 1.0180 | 1.0460 |
|---|---|---|
| PHI | | |
| .000 | .2473 | .3189 |
| 40.000 | .1939 | .2170 |

ALPHA ( 3) = 3.849 BETA ( 1) = -3.909 MACH = 1.3959 Q = 599.13 P = 439.24 RN/L = 2.9206

SECTION ( 1)BODY FLAP LOWER DEPENDENT VARIABLE CP

| X/LB | 1.0180 | .0460 |
|---|---|---|
| PHI | | |
| .000 | .3423 | .4138 |
| 40.000 | .3024 | .3058 |

ALPHA ( 3) = 3.967 BETA ( 2) = .154 MACH = 1.3959 Q = 599.13 P = 439.24 RN/L = 2.9206

SECTION ( 1)BODY FLAP LOWER DEPENDENT VARIABLE CP

| X/LB | 1.0180 | 1.0460 |
|---|---|---|
| PHI | | |
| .000 | .3376 | .4056 |
| 40.000 | .2912 | .2924 |

ALPHA ( 3) = 3.885 BETA ( 3) = 4.208 MACH = 1.3959 Q = 599.13 P = 439.24 RN/L = 2.9206

SECTION ( 1)BODY FLAP LOWER DEPENDENT VARIABLE CP

| X/LB | 1.0180 | 1.0460 |
|---|---|---|
| PHI | | |
| .000 | .3292 | .4079 |
| 40.000 | .2657 | .2831 |

DATE 13 FEB 76 TABULATED PRESSURE DATA - OA148 ( AMES 11-073-1 ) (XE8GDB)

AMES 11-073(OA148) -140A/B/C/R ORB BODY FLAP LWR

ALPHA ( 4) = 7.858 BETA ( 1) = -3.901 MACH = 1.3952 Q = 599.12 P = 439.71 RN/L = 2.9176

SECTION ( 1)BODY FLAP LOWER DEPENDENT VARIABLE CP

| X/LB | 1.0180 | 1.0460 |
|---|---|---|
| PHI | | |
| .000 | .4633 | .5091 |
| 40.000 | .3934 | .3784 |

ALPHA ( 4) = 7.941 BETA ( 2) = .144 MACH = 1.3952 Q = 599.12 P = 439.71 RN/L = 2.9176

SECTION ( 1)BODY FLAP LOWER DEPENDENT VARIABLE CP

| X/LB | 1.0180 | 1.0460 |
|---|---|---|
| PHI | | |
| .000 | .4615 | .4978 |
| 40.000 | .3771 | .3812 |

ALPHA ( 4) = 7.942 BETA ( 3) = 4.207 MACH = 1.3952 Q = 599.12 P = 439.71 RN/L = 2.9176

SECTION ( 1)BODY FLAP LOWER DEPENDENT VARIABLE CP

| X/LB | 1.0180 | 1.0460 |
|---|---|---|
| PHI | | |
| .000 | .4424 | .5109 |
| 40.000 | .3629 | .3737 |

ALPHA ( 5) = 11.290 BETA ( 1) = -3.888 MACH = 1.3944 Q = 599.11 P = 440.18 RN/L = 2.9195

SECTION ( 1)BODY FLAP LOWER DEPENDENT VARIABLE CP

| X/LB | 1.0180 | 1.0460 |
|---|---|---|
| PHI | | |
| .000 | .5778 | .5991 |
| 40.000 | .4836 | .4481 |

ALPHA ( 5) = 11.897 BETA ( 2) = .146 MACH = 1.3944 Q = 599.11 P = 440.18 RN/L = 2.9195

SECTION ( 1)BODY FLAP LOWER DEPENDENT VARIABLE CP

| X/LB | 1.0180 | 1.0460 |
|---|---|---|
| PHI | | |
| .000 | .5575 | .5871 |
| 40.000 | .4835 | .4491 |

AMES 11-073(OA148) -140A/B/C/R ORB BODY FLAP LWR (XE8GDB)

ALPHA ( 5) = 11.893 BETA ( 3) = 4.224 MACH = 1.3944 Q = 599.11 P = 440.18 RN/L = 2.9183

SECTION ( 1)BODY FLAP LOWER DEPENDENT VARIABLE CP

| X/LB | 1.0180 | 1.0460 |
|---|---|---|
| PHI | | |
| .000 | .5545 | .5915 |
| 40.000 | .4537 | .4479 |

ALPHA ( 6) = 15.905 BETA ( 1) = -3.863 MACH = 1.3948 Q = 599.11 P = 439.94 RN/L = 2.9186

SECTION ( 1)BODY FLAP LOWER DEPENDENT VARIABLE CP

| X/LB | 1.0180 | 1.0460 |
|---|---|---|
| PHI | | |
| .000 | .6904 | .6639 |
| 40.000 | .5713 | .5101 |

ALPHA ( 6) = 15.918 BETA ( 2) = .144 MACH = 1.3948 Q = 599.11 P = 439.94 RN/L = 2.9186

SECTION ( 1)BODY FLAP LOWER DEPENDENT VARIABLE CP

| X/LB | 1.0180 | 1.0460 |
|---|---|---|
| PHI | | |
| .000 | .6615 | .6631 |
| 40.000 | .5743 | .5161 |

ALPHA ( 6) = 15.908 BETA ( 3) = 4.250 MACH = 1.3948 Q = 599.11 P = 439.94 RN/L = 2.9186

SECTION ( 1)BODY FLAP LOWER DEPENDENT VARIABLE CP

| X/LB | 1.0180 | 1.0460 |
|---|---|---|
| PHI | | |
| .000 | .6606 | .6649 |
| 40.000 | .5483 | .5147 |

ORIGINAL PAGE IS OF POOR QUALITY

AMES 11-073(OA148) -140A/B/C/R ORB BODY FLAP LWR (XEBG09) ( 05 AUG 75 )

REFERENCE DATA

SREF = 2890.0000 SQ.FT. XMRP = 1076.6800 IN. XO
LREF = 474.8000 IN. YMRP = .0000 IN. YO
BREF = 936.0690 IN. ZMRP = 375.0000 IN. ZO
SCALE = .0300

PARAMETRIC DATA

RUDDER = .000 SPDBRK = 85.000
BDFLAP = 22.500 L-ELVN = .000
R-ELVN = .000 MACH = 1.250

ALPHA ( 1) = -4.026 BETA ( 1) = -3.882 MACH = 1.2460 Q = 599.62 P = 551.80 RN/L = 3.0276

SECTION ( 1)BODY FLAP LOWER DEPENDENT VARIABLE CP

| X/LB | 1.0180 | 1.0460 |
|---|---|---|
| PHI | | |
| .000 | .2359 | .3161 |
| 40.000 | .0937 | .1326 |

ALPHA ( 1) = -4.017 BETA ( 2) = .155 MACH = 1.2460 Q = 599.60 P = 551.80 RN/L = 3.0276

SECTION ( 1)BODY FLAP LOWER DEPENDENT VARIABLE CP

| X/LB | 1.0180 | 1.0460 |
|---|---|---|
| PHI | | |
| .000 | .2126 | .3324 |
| 40.000 | .1463 | .1664 |

ALPHA ( 1) = -4.025 BETA ( 3) = 4.236 MACH = 1.2460 Q = 599.62 P = 551.30 RN/L = 3.0275

SECTION ( 1)BODY FLAP LOWER DEPENDENT VARIABLE CP

| X/LB | 1.0180 | 1.0460 |
|---|---|---|
| PHI | | |
| .000 | .2397 | .3012 |
| 40.000 | .1413 | .1658 |

ALPHA ( 2) = .013 BETA ( 1) = -3.903 MACH = 1.2463 Q = 599.67 P = 551.57 RN/L = 3.0281

SECTION ( 1)BODY FLAP LOWER DEPENDENT VARIABLE CP

| X/LB | 1.0180 | 1.0460 |
|---|---|---|
| PHI | | |
| .000 | .2910 | .3315 |
| 40.000 | .2333 | .2314 |

AMES 11-073(OA148) -140A/B/C/R ORB BODY FLAP LWR (XEB009)

ALPHA ( 2) = .017 BETA ( 2) = .152 MACH = 1.2463 Q = 599.67 P = 551.57 RN/L = 3.0283

SECTION ( 1)BODY FLAP LOWER DEPENDENT VARIABLE CP

| X/LB | 1.0180 | 1.0460 |
|---|---|---|
| PHI | | |
| .000 | .2929 | .3454 |
| 40.000 | .2009 | .2110 |

ALPHA ( 2) = .013 BETA ( 3) = 4.217 MACH = 1.2463 Q = 599.67 P = 551.57 RN/L = 3.0283

SECTION ( 1)BODY FLAP LOWER DEPENDENT VARIABLE CP

| X/LB | 1.0180 | 1.0460 |
|---|---|---|
| PHI | | |
| .000 | .2788 | .3234 |
| 40.000 | .2015 | .2051 |

ALPHA ( 3) = 3.907 BETA ( 1) = -3.907 MACH = 1.2463 Q = 599.67 P = 551.57 RN/L = 3.0276

SECTION ( 1)BODY FLAP LOWER DEPENDENT VARIABLE CP

| X/LB | 1.0180 | 1.0460 |
|---|---|---|
| PHI | | |
| .000 | .3322 | .4154 |
| 40.000 | .3235 | .3045 |

ALPHA ( 3) = 3.907 BETA ( 2) = .148 MACH = 1.2463 Q = 599.67 P = 551.57 RN/L = 3.0276

SECTION ( 1)BODY FLAP LOWER DEPENDENT VARIABLE CP

| X/LB | 1.0180 | 1.0460 |
|---|---|---|
| PHI | | |
| .000 | .3977 | .4123 |
| 40.000 | .2914 | .2747 |

ALPHA ( 3) = 3.911 BETA ( 3) = 4.207 MACH = 1.2463 Q = 599.67 P = 551.57 RN/L = 3.0276

SECTION ( 1)BODY FLAP LOWER DEPENDENT VARIABLE CP

| X/LB | 1.0180 | 1.0460 |
|---|---|---|
| PHI | | |
| .000 | .3793 | .4134 |
| 40.000 | .2892 | .2705 |

AMES 11-073(OA148) -140A/B/C/R ORB BODY FLAP LWR (XEB039)

ALPHA ( 4) = 7.933 BETA ( 1) = -3.903 MACH = 1.2463 Q = 599.67 P = 551.57 RN/L = 3.0282

SECTION ( 1)BODY FLAP LOWER DEPENDENT VARIABLE CP

| X/LB | 1.0180 | 1.0460 |
|---|---|---|
| PHI | | |
| .000 | .5003 | .4929 |
| 40.000 | .3974 | .3601 |

ALPHA ( 4) = 7.889 BETA ( 2) = .143 MACH = 1.2463 Q = 599.67 P = 551.57 RN/L = 3.0282

SECTION ( 1)BODY FLAP LOWER DEPENDENT VARIABLE CP

| X/LB | 1.0180 | 1.0460 |
|---|---|---|
| PHI | | |
| .000 | .4977 | .4857 |
| 40.000 | .3964 | .3479 |

ALPHA ( 4) = 7.857 BETA ( 3) = 4.208 MACH = 1.2463 Q = 599.67 P = 551.57 RN/L = 3.0282

SECTION ( 1)BODY FLAP LOWER DEPENDENT VARIABLE CP

| X/LB | 1.0180 | 1.0460 |
|---|---|---|
| PHI | | |
| .000 | .4818 | .4920 |
| 40.000 | .3765 | .3394 |

ALPHA ( 5) = 11.893 BETA ( 1) = -3.885 MACH = 1.2447 Q = 599.41 P = 552.74 RN/L = 3.0273

SECTION ( 1)BODY FLAP LOWER DEPENDENT VARIABLE CP

| X/LB | 1.0180 | 1.0460 |
|---|---|---|
| PHI | | |
| .000 | .5995 | .5502 |
| 40.000 | .4771 | .4055 |

ALPHA ( 5) = 11.849 BETA ( 2) = .145 MACH = 1.2447 Q = 599.41 P = 552.74 RN/L = 3.0273

SECTION ( 1)BODY FLAP LOWER DEPENDENT VARIABLE CP

| X/LB | 1.0180 | 1.0460 |
|---|---|---|
| PHI | | |
| .000 | .5894 | .5474 |
| 40.000 | .4785 | .3957 |

AMES 11-073(OA148) -140A/B/C/R OPB BODY FLAP LWR (X06309)

ALPHA ( 5) = 11.849 BETA ( 3) = 4.220 MACH = 1.2447 Q = 599.41 P = 552.74 RN/L = 3.0279

SECTION ( 1)BODY FLAP LOWER DEPENDENT VARIABLE CP

| X/LB | 1.0180 | 1.0460 |
|---|---|---|
| PHI | | |
| .000 | .5858 | .5502 |
| 40.000 | .4601 | .3911 |

AMES 11-073(OA148) -140A/B/C/R ORB BODY FLAP LWR (XE8G10) ( 05 AUG 75 )

REFERENCE DATA

SREF = 2690.0000 SQ.FT. XMRP = 1076.6800 IN. XO
LREF = 474.8000 IN. YMRP = .0000 IN. YO
BREF = 936.0560 IN. ZMRP = 375.0000 IN. ZO
SCALE = .0300

PARAMETRIC DATA

RUDDER = .000 SPDBRK = 85.000
BDFLAP = 22.500 L-ELVN = .000
R-ELVN = .000 MACH = 1.100

ALPHA ( 1) = -4.037 BETA ( 1) = -3.883 MACH = 1.0977 Q = 598.52 P = 709.53 RN/L = 3.1914

SECTION ( 1)BODY FLAP LOWER DEPENDENT VARIABLE CP

| X/LB | 1.0180 | 1.0460 |
|---|---|---|
| PHI | | |
| .000 | .3320 | .3261 |
| 40.000 | .1421 | .1741 |

ALPHA ( 1) = -4.035 BETA ( 2) = .155 MACH = 1.0977 Q = 598.52 P = 709.53 RN/L = 3.1914

SECTION ( 1)BODY FLAP LOWER DEPENDENT VARIABLE CP

| X/LB | 1.0180 | 1.0460 |
|---|---|---|
| PHI | | |
| .000 | .3150 | .3406 |
| 40.000 | .1869 | .2077 |

ALPHA ( 1) = -4.042 BETA ( 3) = 4.235 MACH = 1.0977 Q = 598.52 P = 709.53 RN/L = 3.1914

SECTION ( 1)BODY FLAP LOWER DEPENDENT VARIABLE CP

| X/LB | 1.0180 | 1.0460 |
|---|---|---|
| PHI | | |
| .000 | .3205 | .3020 |
| 40.000 | .1528 | .1872 |

ALPHA ( 2) = .020 BETA ( 1) = -3.899 MACH = 1.0996 Q = 598.85 P = 707.64 RN/L = 3.1885

SECTION ( 1)BODY FLAP LOWER DEPENDENT VARIABLE CP

| X/LB | 1.0180 | 1.0460 |
|---|---|---|
| PHI | | |
| .000 | .3284 | .3229 |
| 40.000 | .2283 | .2522 |

AMES 11-073(OA148) -140A/B/C/R ORB BODY FLAP LWR (XE8G10)

ALPHA ( 2) = .025 BETA ( 2) = .152 MACH = 1.0996 Q = 598.85 P = 707.64 RN/L = 3.1885

SECTION ( 1)BODY FLAP LOWER DEPENDENT VARIABLE CP

| X/LB | 1.0180 | 1.0460 |
|---|---|---|
| PHI | | |
| .000 | .3939 | .3595 |
| 40.000 | .2405 | .2388 |

ALPHA ( 2) = .023 BETA ( 3) = 4.214 MACH = 1.0996 Q = 598.85 P = 707.64 RN/L = 3.1885

SECTION ( 1)BODY FLAP LOWER DEPENDENT VARIABLE CP

| X/LB | 1.0180 | 1.0460 |
|---|---|---|
| PHI | | |
| .000 | .2971 | .3214 |
| 40.000 | .2307 | .2028 |

ALPHA ( 3) = 3.934 BETA ( 1) = -3.903 MACH = 1.0985 Q = 598.62 P = 708.59 RN/L = 3.1905

SECTION ( 1)BODY FLAP LOWER DEPENDENT VARIABLE CP

| X/LB | 1.0180 | 1.0460 |
|---|---|---|
| PHI | | |
| .000 | .4306 | .3843 |
| 40.000 | .3600 | .2853 |

ALPHA ( 3) = 3.940 BETA ( 2) = .149 MACH = 1.0985 Q = 598.62 P = 708.59 RN/L = 3.1905

SECTION ( 1)BODY FLAP LOWER DEPENDENT VARIABLE CP

| X/LB | 1.0180 | 1.0460 |
|---|---|---|
| PHI | | |
| .000 | .4555 | .3893 |
| 40.000 | .3290 | .2619 |

ALPHA ( 3) = 3.944 BETA ( 3) = 4.204 MACH = 1.0985 Q = 598.62 P = 708.59 RN/L = 3.1905

SECTION ( 1)BODY FLAP LOWER DEPENDENT VARIABLE CP

| X/LB | 1.0180 | 1.0460 |
|---|---|---|
| PHI | | |
| .000 | .4165 | .3819 |
| 40.000 | .3029 | .2342 |

ORIGINAL PAGE IS
OF POOR QUALITY

AMES 11-073(OA148) -140A/B/C/R ORB BODY FLAP LWR (XE8G1D)

ALPHA ( 4) = 7.882 BETA ( 1) = -3.899 MACH = 1.0980 Q = 598.61 P = 709.30 RN/L = 3.1901

SECTION ( 1)BODY FLAP LOWER DEPENDENT VARIABLE CP

| X/LB | 1.0180 | 1.0460 |
|---|---|---|
| PHI | | |
| .000 | .5328 | .4269 |
| 40.000 | .4073 | .2981 |

ALPHA ( 4) = 7.887 BETA ( 2) = .144 MACH = 1.0980 Q = 598.61 P = 709.30 RN/L = 3.1901

SECTION ( 1)BODY FLAP LOWER DEPENDENT VARIABLE CP

| X/LB | 1.0180 | 1.0460 |
|---|---|---|
| PHI | | |
| .000 | .5564 | .4293 |
| 40.000 | .4124 | .2873 |

ALPHA ( 4) = 7.888 BETA ( 3) = 4.206 MACH = 1.0980 Q = 598.61 P = 709.30 RN/L = 3.1901

SECTION ( 1)BODY FLAP LOWER DEPENDENT VARIABLE CP

| X/LB | 1.0180 | 1.0460 |
|---|---|---|
| PHI | | |
| .000 | .5287 | .4272 |
| 40.000 | .3850 | .2672 |

ALPHA ( 5) = 11.921 BETA ( 1) = -3.873 MACH = 1.0991 Q = 599.16 P = 708.60 RN/L = 3.1919

SECTION ( 1)BODY FLAP LOWER DEPENDENT VARIABLE CP

| X/LB | 1.0180 | 1.0460 |
|---|---|---|
| PHI | | |
| .000 | .6373 | .4625 |
| 40.000 | .4976 | .3237 |

ALPHA ( 5) = 11.930 BETA ( 2) = .146 MACH = 1.0991 Q = 599.16 P = 708.60 RN/L = 3.1919

SECTION ( 1)BODY FLAP LOWER DEPENDENT VARIABLE CP

| X/LB | 1.0180 | 1.0460 |
|---|---|---|
| PHI | | |
| .000 | .6496 | .4623 |
| 40.000 | .4972 | .3089 |

DATE 13 FEB 76 TABULATED PRESSURE DATA - OA148 ( AMES 11-073-1 )

AMES 11-073(OA148) -140A/B/C/R ORB BODY FLAP LWR (XE8G10)

ALPHA ( 5) = 11.928 BETA ( 3) = 4.214 MACH = 1.0991 Q = 599.16 P = 708.60 RN/L = 3.1919

SECTION ( 1)BODY FLAP LOWER DEPENDENT VARIABLE CP

| X/LB | 1.0180 | 1.0460 |
|---|---|---|
| PHI | | |
| .000 | .6296 | .4592 |
| 40.000 | .4697 | .2859 |

AMES 11-073(OA148) -140A/B/C/R ORB BODY FLAP LWR (XE8G11) ( 05 AUG 75 )

REFERENCE DATA

SREF = 2690.0000 SQ.FT. XMRP = 1076.6800 IN. XO
LREF = 474.8000 IN. YMRP = .0000 IN. YO
BREF = 936.0680 IN. ZMRP = 375.0000 IN. ZO
SCALE = .0300

PARAMETRIC DATA

RUDDER = .000 SPDBRK = 85.000
BDFLAP = 22.500 L-ELVN = .000
R-ELVN = .000 MACH = .900

ALPHA ( 1) = -4.067 BETA ( 1) = -3.873 MACH = .90043 Q = 600.11 P = 1057.3 RN/L = 3.5779

SECTION ( 1)BODY FLAP LOWER DEPENDENT VARIABLE CP

| X/LB | 1.0180 | 1.0460 |
|---|---|---|
| PHI | | |
| .000 | .4044 | .2239 |
| 40.000 | .2322 | .1251 |

ALPHA ( 1) = -4.047 BETA ( 2) = .148 MACH = .90043 Q = 600.11 P = 1057.3 RN/L = 3.5778

SECTION ( 1)BODY FLAP LOWER DEPENDENT VARIABLE CP

| X/LB | 1.0180 | 1.0460 |
|---|---|---|
| PHI | | |
| .000 | .4290 | .2363 |
| 40.000 | .2753 | .1217 |

ALPHA ( 1) = -4.057 BETA ( 3) = 4.239 MACH = .90043 Q = 600.11 P = 1057.3 RN/L = 3.5776

SECTION ( 1)BODY FLAP LOWER DEPENDENT VARIABLE CP

| X/LB | 1.0180 | 1.0460 |
|---|---|---|
| PHI | | |
| .000 | .3827 | .2139 |
| 40.000 | .2827 | .0894 |

ALPHA ( 2) = [illegible] BETA ( 1) = -3.906 MACH = .89947 Q = 599.38 P = 1058.3 RN/L = 3.574

SECTION ( 1)BODY FLAP LOWER DEPENDENT VARIABLE CP

| X/LB | 1.0180 | 1.0460 |
|---|---|---|
| PHI | | |
| .000 | .3787 | .2115 |
| 40.000 | .3050 | .1405 |

AMES 11-073(OA148) -140A/B/C/R ORB BODY FLAP LWR (XE8G11)

ALPHA ( 2) = .014 BETA ( 2) = .'39 MACH = .89947 Q = 599.38 P = 1058.3 RN/L = 3.5741

SECTION ( 1)BODY FLAP LOWER DEPENDENT VARIABLE CP

| X/LB | 1.0180 | 1.0460 |
|---|---|---|
| PHI | | |
| .000 | .4205 | .2251 |
| 40.000 | .2860 | .1143 |

ALPHA ( 2) = .024 BETA ( 3) = 4.220 MACH = .89947 Q = 599.38 P = 1058.3 RN/L = 3.5741

SECTION ( 1)BODY FLAP LOWER DEPENDENT VARIABLE CP

| X/LB | 1.0180 | 1.0460 |
|---|---|---|
| PHI | | |
| .000 | .3819 | .2205 |
| 40.000 | .2842 | .0839 |

ALPHA ( 3) = 3.936 BETA ( 1) = -3.911 MACH = .89917 Q = 599.47 P = 1059.2 RN/L = 3.5758

SECTION ( 1)BODY FLAP LOWER DEPENDENT VARIABLE CP

| X/LB | 1.0180 | 1.0460 |
|---|---|---|
| PHI | | |
| .000 | .4497 | .2339 |
| 40.000 | .3638 | .1479 |

ALPHA ( 3) = 3.937 BETA ( 2) = .151 MACH = .89917 Q = 599.47 P = 1059.2 RN/L = 3.5758

SECTION ( 1)BODY FLAP LOWER DEPENDENT VARIABLE CP

| X/LB | 1.0180 | 1.0460 |
|---|---|---|
| PHI | | |
| .000 | .4557 | .2321 |
| 40.000 | .3361 | .1175 |

ALPHA ( 3) = 3.940 BETA ( 3) = 4.207 MACH = .89917 Q = 599.47 P = 1059.2 RN/L = 3.5758

SECTION ( 1)BODY FLAP LOWER DEPENDENT VARIABLE CP

| X/LB | 1.0180 | 1.0460 |
|---|---|---|
| PHI | | |
| .000 | .4539 | .2383 |
| 40.000 | .3027 | .0913 |

ORIGINAL PAGE IS OF POOR QUALITY

AMES 11-073(OA148) -140A/B/C/R ORB BODY FLAP LWR (XEBG11)

ALPHA ( 4) = 7.890 BETA ( 1) = -3.900 MACH = .89940 Q = 599.79 P = 1059.2 RN/L = 3.5790

SECTION ( 1)BODY FLAP LOWER DEPENDENT VARIABLE CP

| X/LB | 1.0180 | 1.0460 |
|---|---|---|
| PHI | | |
| .000 | .5074 | .2527 |
| 40.000 | .4050 | .1531 |

ALPHA ( 4) = 7.894 BETA ( 2) = .145 MACH = .89940 Q = 599.79 P = 1059.2 RN/L = 3.5790

SECTION ( 1)BODY FLAP LOWER DEPENDENT VARIABLE CP

| X/LB | 1.0180 | 1.0460 |
|---|---|---|
| PHI | | |
| .000 | .5141 | .2505 |
| 40.000 | .3658 | .1258 |

ALPHA ( 4) = 7.892 BETA ( 3) = 4.207 MACH = .89940 Q = 599.79 P = 1059.2 RN/L = 3.5790

SECTION ( 1)BODY FLAP LOWER DEPENDENT VARIABLE CP

| X/LB | 1.0180 | 1.0460 |
|---|---|---|
| PHI | | |
| .000 | .5031 | .2494 |
| 40.000 | .3420 | .0990 |

ALPHA ( 5) = 11.932 BETA ( 1) = -3.884 MACH = .89887 Q = 599.34 P = 1059.7 RN/L = 3.5747

SECTION ( 1)BODY FLAP LOWER DEPENDENT VARIABLE CP

| X/LB | 1.0180 | 1.0460 |
|---|---|---|
| PHI | | |
| .000 | .5528 | .2601 |
| 40.000 | .4191 | .1452 |

ALPHA ( 5) = 11.939 BETA ( 2) = .149 MACH = .89887 Q = 599.34 P = 1059.7 RN/L = 3.5747

SECTION ( 1)BODY FLAP LOWER DEPENDENT VARIABLE CP

| X/LB | 1.0180 | 1.0460 |
|---|---|---|
| PHI | | |
| .000 | .5490 | .2579 |
| 40.000 | .3924 | .1183 |

AMES 11-073(OA148) -140A/B/C/R ORB BODY FLAP LWR (XEBG11)

ALPHA ( 5) = 11.928 BETA ( 3) = 4.023 MACH = .89887 Q = 599.34 P = 1059.7 RN/L = 3.5747

SECTION ( 1)BODY FLAP LOWER DEPENDENT VARIABLE CP

| X/LB | 1.0180 | 1.0460 |
|---|---|---|
| PHI | | |
| .000 | .5481 | .2518 |
| 40.000 | .3629 | .0909 |

AMES 11-073(OA148) -140A/B/C/R ORB BODY FLAP LWR (XE8612) ( 05 AUG 75 )

REFERENCE DATA

SREF = 2690.0000 SQ.FT. XMRP = 1076.6800 IN. XO
LREF = 474.8000 IN. YMRP = .0000 IN. YO
BREF = 936.0680 IN. ZMRP = 375.0000 IN. ZO
SCALE = .0300

PARAMETRIC DATA

RUDDER = .000 SPDBRK = 85.000
BDFLAP = 22.500 L-ELVN = .000
R-ELVN = .000 MACH = .600

ALPHA ( 1) = -4.057 BETA ( 1) = -7.889 MACH = .59636 Q = 593.96 P = 2385.7 RN/L = 4.8160

SECTION ( 1)BODY FLAP LOWER DEPENDENT VARIABLE CP

| X/LB | 1.0180 | 1.0460 |
|---|---|---|
| PHI | | |
| .000 | .3411 | .0910 |
| 40.000 | .2490 | .0324 |

ALPHA ( 1) = -4.036 BETA ( 2) = -3.874 MACH = .59636 Q = 593.96 P = 2385.7 RN/L = 4.8150

SECTION ( 1)BODY FLAP LOWER DEPENDENT VARIABLE CP

| X/LB | 1.0180 | 1.0460 |
|---|---|---|
| PHI | | |
| .000 | .3532 | .0897 |
| 40.000 | .2488 | .0244 |

ALPHA ( 1) = -4.017 BETA ( 3) = .163 MACH = .59636 Q = 593.96 P = 2385.7 RN/L = 4.8130

SECTION ( 1)BODY FLAP LOWER DEPENDENT VARIABLE CP

| X/LB | 1.0180 | 1.0460 |
|---|---|---|
| PHI | | |
| .000 | .3760 | .0968 |
| 40.000 | .2245 | .0167 |

ALPHA ( 1) = -4.025 BETA ( 4) = 4.234 MACH = .59636 Q = 593.96 P = 2385.7 RN/L = 4.8150

SECTION ( 1)BODY FLAP LOWER DEPENDENT VARIABLE CP

| X/LB | 1.0180 | 1.0460 |
|---|---|---|
| PHI | | |
| .000 | .3451 | .0916 |
| 40.000 | .2362 | -.0075 |

AMES 11-073(OA148) -140A/B/C/R ORB BODY FLAP LWR (XEBG12)

ALPHA ( 1) = -4.040 BETA ( 5) = 8.307 MACH = .59636 Q = 593.96 P = 2385.7 RN/L = 4.8160

SECTION ( 1)BODY FLAP LOWER DEPENDENT VARIABLE CP

| X/LB | 1.0180 | 1.0460 |
|---|---|---|
| PHI | | |
| .000 | .3310 | .0811 |
| 40.000 | .2064 | -.0145 |

ALPHA ( 2) = .047 BETA ( 1) = -7.924 MACH = .59654 Q = 594.31 P = 2385.7 RN/L = 4.8134

SECTION ( 1)BODY FLAP LOWER DEPENDENT VARIABLE CP

| X/LB | 1.0180 | 1.0460 |
|---|---|---|
| PHI | | |
| .000 | .3894 | .0990 |
| 40.000 | .2909 | .0454 |

ALPHA ( 2) = .057 BETA ( 2) = -3.897 MACH = .59654 Q = 594.31 P = 2385.7 RN/L = 4.8134

SECTION ( 1)BODY FLAP LOWER DEPENDENT VARIABLE CP

| X/LB | 1.0180 | 1.0460 |
|---|---|---|
| PHI | | |
| .000 | .3622 | .0964 |
| 40.000 | .2954 | .0361 |

ALPHA ( 2) = .058 BETA ( 3) = .160 MACH = .59654 Q = 594.31 P = 2385.7 RN/L = 4.8134

SECTION ( 1)BODY FLAP LOWER DEPENDENT VARIABLE CP

| X/LB | 1.0180 | 1.0460 |
|---|---|---|
| PHI | | |
| .000 | .3730 | .0978 |
| 40.000 | .2488 | .0167 |

ALPHA ( 2) = .052 BETA ( 4) = 4.215 MACH = .59654 Q = 594.31 P = 2385.7 RN/L = 4.8134

SECTION ( 1)BODY FLAP LOWER DEPENDENT VARIABLE CP

| X/LB | 1.0180 | 1.0460 |
|---|---|---|
| PHI | | |
| .000 | .3633 | .0985 |
| 40.000 | .2300 | -.0029 |

AMES 11-073(OA148) -140A/B/C/R ORB BODY FLAP LWR (XE0012)

ALPHA ( 2) = .048 BETA ( 5) = 8.271 MACH = .59654 Q = 594.31 P = 2385.7 RN/L = 4.8134

SECTION ( 1)BODY FLAP LOWER DEPENDENT VARIABLE CP

| X/LB | 1.0180 | 1.0460 |
|---|---|---|
| PHI | | |
| .000 | .3831 | .1003 |
| 40.000 | .2168 | -.0106 |

ALPHA ( 3) = 3.956 BETA ( 1) = -7.937 MACH = .59690 Q = 595.02 P = 2385.7 RN/L = 4.8206

SECTION ( 1)BODY FLAP LOWER DEPENDENT VARIABLE CP

| X/LB | 1.0180 | 1.0460 |
|---|---|---|
| PHI | | |
| .000 | .4185 | .1090 |
| 40.000 | .3174 | .0548 |

ALPHA ( 3) = 3.958 BETA ( 2) = -3.898 MACH = .59690 Q = 595.02 P = 2385.7 RN/L = [illegible]

SECTION ( 1)BODY FLAP LOWER DEPENDENT VARIABLE CP

| X/LB | 1.0180 | 1.0460 |
|---|---|---|
| PHI | | |
| .000 | .3967 | .1069 |
| 40.000 | .3079 | .0387 |

ALPHA ( 3) = 3.957 BETA ( 3) = .162 MACH = .59690 Q = 595.02 P = 2385.7 RN/L = [illegible]

SECTION ( 1)BODY FLAP LOWER DEPENDENT VARIABLE CP

| X/LB | 1.0180 | 1.0460 |
|---|---|---|
| PHI | | |
| .000 | .3974 | .1094 |
| 40.000 | .2716 | .0205 |

ALPHA ( 3) = 3.954 BETA ( 4) = 4.202 MACH = .59690 Q = 595.02 P = 2385.7 RN/L = 4.8205

SECTION ( 1)BODY FLAP LOWER DEPENDENT VARIABLE CP

| X/LB | 1.0180 | 1.0460 |
|---|---|---|
| PHI | | |
| .000 | .4005 | .1097 |
| 40.000 | .2483 | .0041 |

AMES 11-073(OA148) -140A/B/C/R ORB BODY FLAP LWR (XEB012)

ALPHA ( 3) = 3.960 BETA ( 5) = 8.252 MACH = .59590 Q = 595.02 P = 2385.7 RN/L = 4.8205

SECTION ( 1)BODY FLAP LOWER DEPENDENT VARIABLE CP

| X/LB | 1.0180 | 1.0460 |
|---|---|---|
| PHI | | |
| .000 | .4133 | .0982 |
| 40.000 | .2435 | .0012 |

ALPHA ( 4) = 7.904 BETA ( 1) = -7.922 MACH = .59590 Q = 595.02 P = 2385.7 RN/L = 4.8202

SECTION ( 1)BODY FLAP LOWER DEPENDENT VARIABLE CP

| X/LB | 1.0180 | 1.0460 |
|---|---|---|
| PHI | | |
| .000 | .4421 | .1169 |
| 40.000 | .3315 | .0592 |

ALPHA ( 4) = 7.913 BETA ( 2) = -3.891 MACH .59690 Q = 595.02 P = 2385.7 RN/L = 4.8202

SECTION ( 1)BODY FLAP LOWER DEPENDENT VARIABLE CP

| X/LB | 1.0180 | 1.0460 |
|---|---|---|
| PHI | | |
| .000 | .4335 | .1198 |
| 40.000 | .3191 | .0470 |

ALPHA ( 4) = 7.912 BETA ( 3) = .160 MACH = .59690 Q = 595.02 P = 2385.7 RN/L = 4.8202

SECTION ( 1)BODY FLAP LOWER DEPENDENT VARIABLE CP

| X/LB | 1.0180 | 1.0460 |
|---|---|---|
| PHI | | |
| .000 | .4331 | .1202 |
| 40.000 | .2994 | .0348 |

ALPHA ( 4) = 7.910 BETA ( 4) = 4.204 MACH = .59590 Q = 595.02 P = 2385.7 RN/L = 4.8202

SECTION ( 1)BODY FLAP LOWER DEPENDENT VARIABLE CP

| X/LB | 1.0180 | 1.0460 |
|---|---|---|
| PHI | | |
| .000 | .4340 | .1197 |
| 40.000 | .2777 | .0148 |

DATE 13 FEB 76 TABULATED PRESSURE DATA - OA148 ( AMES 11-073-1 )

AMES 11-073(OA148) -140A/B/C/R ORB BODY FLAP LWR (XOBG112)

ALPHA ( 4) = 7.909 BETA ( 5) = 8.256 MACH = .59690 Q = 595.02 P = 2388.7 RN/L = 4.8202

SECTION ( 1)BODY FLAP LOWER DEPENDENT VARIABLE CP

| X/LB | 1.0180 | 1.0460 |
|---|---|---|
| PHI | | |
| .000 | .4397 | .1037 |
| 40.000 | .2709 | .0066 |

ALPHA ( 5) = 11.950 BETA ( 1) = -7.879 MACH = .59660 Q = 594.43 P = 2385.7 RN/L = 4.8162

SECTION ( 1)BODY FLAP LOWER DEPENDENT VARIABLE CP

| X/LB | 1.0180 | 1.0460 |
|---|---|---|
| PHI | | |
| .000 | .4653 | .1303 |
| 40.000 | .3466 | .0576 |

ALPHA ( 5) = 11.958 BETA ( 2) = -3.871 MACH = .59660 Q = 594.43 P = 2385.7 RN/L = 4.8162

SECTION ( 1)BODY FLAP LOWER DEPENDENT VARIABLE CP

| X/LB | 1.0180 | 1.0460 |
|---|---|---|
| PHI | | |
| .000 | .4623 | .1314 |
| 40.000 | .3354 | .0553 |

ALPHA ( 5) = 11.970 BETA ( 3) = .156 MACH = .59660 Q = 594.43 P = 2385.7 RN/L = 4.8162

SECTION ( 1)BODY FLAP LOWER DEPENDENT VARIABLE CP

| X/LB | 1.0180 | 1.0460 |
|---|---|---|
| PHI | | |
| .000 | .4611 | .1357 |
| 40.000 | .3192 | .0483 |

ALPHA ( 5) = 11.958 BETA ( 4) = 4.216 MACH = .59660 Q = 594.43 P = 2385.7 RN/L = 4.8162

SECTION ( 1)BODY FLAP LOWER DEPENDENT VARIABLE CP

| X/LB | 1.0180 | 1.0460 |
|---|---|---|
| PHI | | |
| .000 | .4623 | .1330 |
| 40.000 | .3013 | .0295 |

AMES 11-073(OA148) -140A/B/C/R OPB BODY FLAP LWR

ALPHA ( 5) = 11.959 BETA ( 5) = 8.279 MACH = .59650 Q = 594.43 P = 2325.7 RN/L = 4.3152

SECTION ( 1)BODY FLAP LOWER DEPENDENT VARIABLE CP

| X/LB | 1.0160 | 1.0460 |
|---|---|---|
| PHI | | |
| .000 | .4649 | .1300 |
| 40.000 | .2890 | .0159 |

REFERENCE DATA

SREF = 2690.0000 SQ.FT. XMRP = 1076.6800 IN. XO
LREF = 474.8000 IN. YMRP = .0000 IN. YO
BREF = 936.0680 IN. ZMRP = 375.0000 IN. ZO
SCALE = .0300

PARAMETRIC DATA

RUDDER = .000 SPOBRK = 35.000
BDFLAP = .000 L-ELVN = .000
R-ELVN = .000 MACH = 1.400

ALPHA ( 1) = -4.106 BETA ( 1) = -3.886 MACH = 1.3946 Q = 599.93 P = 440.65 RN/L = 2.9118

SECTION ( 1)BODY FLAP LOWER DEPENDENT VARIABLE CP

| X/LB | 1.0180 | 1.0460 |
|---|---|---|
| PHI | | |
| .000 | -.2614 | -.2581 |
| 40.000 | -.2864 | -.2505 |

ALPHA ( 1) = -4.030 BETA ( 2) = .154 MACH = 1.3946 Q = 599.93 P = 440.65 RN/L = 2.9118

SECTION ( 1)BODY FLAP LOWER DEPENDENT VARIABLE CP

| X/LB | 1.0180 | 1.0460 |
|---|---|---|
| PHI | | |
| .000 | -.2575 | -.2644 |
| 40.000 | -.2634 | -.2389 |

ALPHA ( 1) = -4.039 BETA ( 3) = 4.249 MACH = 1.3946 Q = 599.93 P = 440.65 RN/L = 2.9118

SECTION ( 1)BODY FLAP LOWER DEPENDENT VARIABLE CP

| X/LB | 1.0180 | 1.0460 |
|---|---|---|
| PHI | | |
| .000 | -.2583 | -.2600 |
| 40.000 | -.2547 | -.2301 |

ALPHA ( 2) = -.033 BETA ( 1) = -3.905 MACH = 1.3950 Q = 599.93 P = 440.41 RN/L = 2.9115

SECTION ( 1)BODY FLAP LOWER DEPENDENT VARIABLE CP

| X/LB | 1.0180 | 1.0460 |
|---|---|---|
| PHI | | |
| .000 | -.2042 | -.2049 |
| 40.000 | -.2360 | -.2037 |

AMES 11-073(OA148) -140A/B/C/R ORB BODY FLAP LWR (XE8G13)

ALPHA ( 2) = -.028 BETA ( 2) = .144 MACH = 1.3950 Q = 599.93 P = 440.41 RN/L = 2.9115

SECTION ( 1)BODY FLAP LOWER DEPENDENT VARIABLE CP

| X/LB | 1.0180 | 1.0460 |
|---|---|---|
| PHI | | |
| .000 | -.1985 | -.2113 |
| 40.000 | -.2256 | -.2096 |

ALPHA ( 2) = -.033 BETA ( 3) = 4.229 MACH = 1.3950 Q = 599.93 P = 440.41 RN/L = 2.9115

SECTION ( 1)BODY FLAP LOWER DEPENDENT VARIABLE CP

| X/LB | 1.0180 | 1.0460 |
|---|---|---|
| PHI | | |
| .000 | -.2021 | -.2094 |
| 40.000 | -.2108 | -.2063 |

ALPHA ( 3) = 3.851 BETA ( 1) = -3.904 MACH = 1.3941 Q = 600.12 P = 441.12 RN/L = 2.9157

SECTION ( 1)BODY FLAP LOWER DEPENDENT VARIABLE CP

| X/LB | 1.0180 | 1.0460 |
|---|---|---|
| PHI | | |
| .000 | -.1460 | -.1574 |
| 40.000 | -.1678 | -.1510 |

ALPHA ( 3) = 3.949 BETA ( 2) = .141 MACH = 1.3941 Q = 600.12 P = 441.12 RN/L = 2.9157

SECTION ( 1)BODY FLAP LOWER DEPENDENT VARIABLE CP

| X/LB | 1.0180 | 1.0460 |
|---|---|---|
| PHI | | |
| .000 | -.1486 | -.1493 |
| 40.000 | -.1633 | -.1680 |

ALPHA ( 3) = 3.862 BETA ( 3) = 4.219 MACH = 1.3941 Q = 600.12 P = 441.12 RN/L = 2.9157

SECTION ( 1)BODY FLAP LOWER DEPENDENT VARIABLE CP

| X/LB | 1.0180 | 1.0460 |
|---|---|---|
| PHI | | |
| .000 | -.1492 | -.1520 |
| 40.000 | -.1613 | -.1779 |

ORIGINAL PAGE IS
OF POOR QUALITY

AMES 11-073(OA148) -140A/B/C/R ORB BODY FLAP LWR (XE8G13)

ALPHA ( 4) = 7.881 BETA ( 1) = -3.904 MACH = 1.3932 Q = 600.00 P = 441.59 RN/L = 2.9150

SECTION ( 1)BODY FLAP LOWER DEPENDENT VARIABLE CP

| X/LB | 1.0180 | 1.0460 |
|---|---|---|
| PHI | | |
| .000 | -.0962 | -.1097 |
| 40.000 | -.1064 | -.1232 |

ALPHA ( 4) = 7.933 BETA ( 2) = .128 MACH = 1.3932 Q = 600.00 P = 441.59 RN/L = 2.9150

SECTION ( 1)BODY FLAP LOWER DEPENDENT VARIABLE CP

| X/LB | 1.0180 | 1.0460 |
|---|---|---|
| PHI | | |
| .000 | -.0933 | -.1135 |
| 40.000 | -.1168 | -.1426 |

ALPHA ( 4) = 7.934 BETA ( 3) = 4.214 MACH = 1.3932 Q = 600.00 P = 441.59 RN/L = 2.9150

SECTION ( 1)BODY FLAP LOWER DEPENDENT VARIABLE CP

| X/LB | 1.0180 | 1.0460 |
|---|---|---|
| PHI | | |
| .000 | -.0968 | -.1096 |
| 40.000 | -.1274 | -.1521 |

ALPHA ( 5) = 11.884 BETA ( 1) = -3.887 MACH = 1.3946 Q = 599.92 P = 440.65 RN/L = 2.9185

SECTION ( 1)BODY FLAP LOWER DEPENDENT VARIABLE CP

| X/LB | 1.0180 | 1.0460 |
|---|---|---|
| PHI | | |
| .000 | -.0484 | -.0719 |
| 40.000 | -.0901 | -.1196 |

ALPHA ( 5) = 11.891 BETA ( 2) = .152 MACH = 1.3946 Q = 599.92 P = 440.65 RN/L = 2.9185

SECTION ( 1)BODY FLAP LOWER DEPENDENT VARIABLE CP

| X/LB | 1.0180 | 1.0460 |
|---|---|---|
| PHI | | |
| .000 | -.0455 | -.0709 |
| 40.000 | -.0840 | -.1306 |

AMES 11-073(OA148) -140A/B/C/R ORB BODY FLAP LWR (XEBG13)

ALPHA ( 5) = 11.887 BETA ( 3) = 4.229 MACH = 1.3946 Q = 599.92 P = 440.65 RN/L = 2.9185

SECTION ( 1)BODY FLAP LOWER DEPENDENT VARIABLE CP

| X/LB | 1.0180 | 1.0460 |
|---|---|---|
| PHI | | |
| .000 | -.0579 | -.0750 |
| 40.000 | -.1040 | -.1223 |

ALPHA ( 6) = 15.888 BETA ( 1) = -3.863 MACH = 1.3935 Q = 600.21 P = 441.59 RN/L = 2.9215

SECTION ( 1)BODY FLAP LOWER DEPENDENT VARIABLE CP

| X/LB | 1.0180 | 1.0460 |
|---|---|---|
| PHI | | |
| .000 | -.0039 | -.0279 |
| 40.000 | -.0661 | -.1129 |

ALPHA ( 6) = 15.865 BETA ( 2) = .152 MACH = 1.3935 Q = 600.21 P = 441.59 RN/L = 2.9216

SECTION ( 1)BODY FLAP LOWER DEPENDENT VARIABLE CP

| X/LB | 1.0180 | 1.0460 |
|---|---|---|
| PHI | | |
| .000 | .0012 | -.0214 |
| 40.000 | -.0568 | -.0960 |

ALPHA ( 6) = 15.903 BETA ( 3) = 4.263 MACH = 1.3935 Q = 600.21 P = 441.59 RN/L = 2.9216

SECTION ( 1)BODY FLAP LOWER DEPENDENT VARIABLE CP

| X/LB | 1.0180 | 1.0460 |
|---|---|---|
| PHI | | |
| .000 | .0008 | -.0213 |
| 40.000 | -.0612 | -.0953 |

AMES 11-073(OA148) -140A/B/C/R ORB BODY FLAP LWR (XE8G14) ( 05 AUG 75 )

REFERENCE DATA

SREF = 2690.0000 SQ.FT. XMRP = 1076.6800 IN. XO
LREF = 474.8000 IN. YMRP = .0000 IN. YO
BREF = 936.0680 IN. ZMRP = 375.0000 IN. ZO
SCALE = .0300

PARAMETRIC DATA

RUDDER = .000 SPDBRK = 35.000
BDFLAP = .000 L-ELVN = .000
R-ELVN = .000 MACH = 1.250

ALPHA ( 1) = -4.010 BETA ( 1) = -3.884 MACH = 1.2452 Q = 553.70 P = 552.51 RN/L = 3.0159

SECTION ( 1)BODY FLAP LOWER DEPENDENT VARIABLE CP

| X/LB | 1.0180 | 1.0460 |
|---|---|---|
| PHI | | |
| .000 | -.3241 | -.3218 |
| 40.000 | -.3339 | -.2747 |

ALPHA ( 1) = -3.944 BETA ( 2) = .148 MACH = 1.2452 Q = 599.70 P = 552.51 RN/L = 3.0159

SECTION ( 1)BODY FLAP LOWER DEPENDENT VARIABLE CP

| X/LB | 1.0180 | 1.0460 |
|---|---|---|
| PHI | | |
| .000 | -.3253 | -.3334 |
| 40.000 | -.3232 | -.2625 |

ALPHA ( 1) = -4.009 BETA ( 3) = 4.237 MACH = 1.2452 Q = 599.70 P = 552.51 RN/L = 3.0159

SECTION ( 1)BODY FLAP LOWER DEPENDENT VARIABLE CP

| X/LB | 1.0180 | 1.0460 |
|---|---|---|
| PHI | | |
| .000 | -.3267 | -.3206 |
| 40.000 | -.3144 | -.2745 |

ALPHA ( 2) = .205 BETA ( 1) = -3.866 MACH = 1.2472 Q = 601.31 P = 552.29 RN/L = 3.0212

SECTION ( 1)BODY FLAP LOWER DEPENDENT VARIABLE CP

| X/LB | 1.0180 | 1.0460 |
|---|---|---|
| PHI | | |
| .000 | -.2533 | -.2552 |
| 40.000 | -.2602 | -.2201 |

AMES 11-073(OA148) -140A/B/C/R ORB BODY FLAP LWR (XE8G14)

ALPHA ( 2) = .220 BETA ( 2) = .185 MACH = 1.2472 Q = 601.31 P = 552.29 RN/L = 3.0212

SECTION ( 1)BODY FLAP LOWER DEPENDENT VARIABLE CP

| X/LB | 1.0180 | 1.0460 |
|---|---|---|
| PHI | | |
| .000 | -.2543 | -.2652 |
| 40.000 | -.2692 | -.2294 |

ALPHA ( 2) = .215 BETA ( 3) = 4.264 MACH = 1.2472 Q = 601.31 P = 552.29 RN/L = 3.0212

SECTION ( 1)BODY FLAP LOWER DEPENDENT VARIABLE CP

| X/LB | 1.0180 | 1.0460 |
|---|---|---|
| PHI | | |
| .000 | -.2585 | -.2625 |
| 40.000 | -.2611 | -.2431 |

ALPHA ( 3) = 3.903 BETA ( 1) = -3.872 MACH = 1.2473 Q = 600.93 P = 551.82 RN/L = 3.0266

SECTION ( 1)BODY FLAP LOWER DEPENDENT VARIABLE CP

| X/LB | 1.0180 | 1.0460 |
|---|---|---|
| PHI | | |
| .000 | -.2014 | -.2111 |
| 40.000 | -.1909 | -.1743 |

ALPHA ( 3) = 3.903 BETA ( 2) = .184 MACH = 1.2473 Q = 600.93 P = 551.82 RN/L = 3.0266

SECTION ( 1)BODY FLAP LOWER DEPENDENT VARIABLE CP

| X/LB | 1.0180 | 1.0460 |
|---|---|---|
| PHI | | |
| .000 | -.1994 | -.2141 |
| 40.000 | -.2149 | -.2009 |

ALPHA ( 3) = 3.907 BETA ( 3) = 4.256 MACH = 1.2473 Q = 600.93 P = 551.82 RN/L = 3.0266

SECTION ( 1)BODY FLAP LOWER DEPENDENT VARIABLE CP

| X/LB | 1.0180 | 1.0460 |
|---|---|---|
| PHI | | |
| .000 | -.2019 | -.2163 |
| 40.000 | -.2128 | -.2126 |

AMES 11-073(OA148) -140A/B/C/R ORB BODY FLAP LWR (XE8G14)

ALPHA ( 4) = 7.853 BETA ( 1) = -3.870 MACH = 1.2469 Q = 600.88 P = 552.06 RN/L = 3.0236

SECTION ( 1)BODY FLAP LOWER DEPENDENT VARIABLE CP

| X/LB | 1.0180 | 1.0460 |
|---|---|---|
| PHI | | |
| .000 | -.1566 | -.1727 |
| 40.000 | -.1540 | -.1611 |

ALPHA ( 4) = 7.959 BETA ( 2) = .181 MACH = 1.2465 Q = 600.88 P = 552.06 RN/L = 3.0236

SECTION ( 1)BODY FLAP LOWER DEPENDENT VARIABLE CP

| X/LB | 1.0180 | 1.0460 |
|---|---|---|
| PHI | | |
| .000 | -.1583 | -.1782 |
| 40.000 | -.1678 | -.1832 |

ALPHA ( 4) = 7.960 BETA ( 3) = 4.251 MACH = 1.2469 Q = 600.88 P = 552.06 RN/L = 3.0236

SECTION ( 1)BODY FLAP LOWER DEPENDENT VARIABLE CP

| X/LB | 1.0180 | 1.0460 |
|---|---|---|
| PHI | | |
| .000 | -.1575 | -.1772 |
| 40.000 | -.1860 | -.2045 |

ALPHA ( 5) = 11.929 BETA ( 1) = -3.853 MACH = 1.2466 Q = 600.83 P = 552.29 RN/L = 3.0248

SECTION ( 1)BODY FLAP LOWER DEPENDENT VARIABLE CP

| X/LB | 1.0180 | 1.0460 |
|---|---|---|
| PHI | | |
| .000 | -.1214 | -.1399 |
| 40.000 | -.1387 | -.1613 |

ALPHA ( 5) = 11.937 BETA ( 2) = .177 MACH = 1.2465 Q = 600.83 P = 552.29 RN/L = 3.0248

SECTION ( 1)BODY FLAP LOWER DEPENDENT VARIABLE CP

| X/LB | 1.0180 | 1.0460 |
|---|---|---|
| PHI | | |
| .000 | -.1152 | -.1392 |
| 40.000 | -.1460 | -.1775 |

AMES 11-073(OA148) -140A/B/C/R ORB BODY FLAP LWR (XE8G14)

ALPHA ( 5) = 11.932 BETA ( 3) = 4.267 MACH = 1.2466 Q = 600.83 P = 552.29 RN/L = 3.0248

SECTION ( 1)BODY FLAP LOWER DEPENDENT VARIABLE CP

| X/LB | 1.0180 | 1.0460 |
|---|---|---|
| PHI | | |
| .000 | -.1167 | -.1479 |
| 40.000 | -.1505 | -.1927 |

ORIGINAL PAGE IS OF POOR QUALITY

AMES 11-073(OA148) -140A/B/C/R ORB BODY FLAP LWR (XE8G15) ( 05 AUG 75 )

REFERENCE DATA

SREF = 2690.0000 SQ.FT. XMRP = 1076.6800 IN. XO
LREF = 474.8000 IN. YMRP = .0000 IN. YO
BREF = 936.0680 IN. ZMRP = 375.0000 IN. ZO
SCALE = .0300

PARAMETRIC DATA

RUDDER = .000 SPDBRK = 35.000
BDFLAP = .000 L-ELVN = .000
R-ELVN = .000 MACH = 1.100

ALPHA ( 1) = -4.072 BETA ( 1) = -3.851 MACH = 1.0992 Q = 599.97 P = 709.32 RN/L = 3.1890

SECTION ( 1)BODY FLAP LOWER DEPENDENT VARIABLE CP

| X/LB | 1.0180 | 1.0460 |
|---|---|---|
| PHI | | |
| .000 | -.4111 | -.3319 |
| 40.000 | -.2987 | -.2816 |

ALPHA ( 1) = -4.070 BETA ( 2) = .189 MACH = 1.0992 Q = 599.97 P = 709.32 RN/L = 3.1890

SECTION ( 1)BODY FLAP LOWER DEPENDENT VARIABLE CP

| X/LB | 1.0180 | 1.0460 |
|---|---|---|
| PHI | | |
| .000 | -.3765 | -.3547 |
| 40.000 | -.2952 | -.2535 |

ALPHA ( 1) = -4.075 BETA ( 3) = 4.283 MACH = 1.0992 Q = 599.97 P = 709.32 RN/L = 3.1890

SECTION ( 1)BODY FLAP LOWER DEPENDENT VARIABLE CP

| X/LB | 1.0180 | 1.0460 |
|---|---|---|
| PHI | | |
| .000 | -.3383 | -.3175 |
| 40.000 | -.3698 | -.3103 |

ALPHA ( 2) = -.011 BETA ( 1) = -3.863 MACH = 1.0994 Q = 599.94 P = 709.08 RN/L = 3.1892

SECTION ( 1)BODY FLAP LOWER DEPENDENT VARIABLE CP

| X/LB | 1.0180 | 1.0460 |
|---|---|---|
| PHI | | |
| .000 | -.3399 | -.2309 |
| 40.000 | -.2518 | -.2284 |

AMES 11-073(OA148) -140A/B/C/R ORB BODY FLAP LWR (XE8G15)

ALPHA ( 2) = -.004 BETA ( 2) = .183 MACH = 1.0994 Q = 599.94 P = 709.08 RN/L = 3.1892

SECTION ( 1)BODY FLAP LOWER DEPENDENT VARIABLE CP

| X/LB | 1.0180 | 1.0460 |
|---|---|---|
| PHI | | |
| .000 | -.3438 | -.2954 |
| 40.000 | -.2652 | -.2341 |

ALPHA ( 2) = -.007 BETA ( 3) = 4.260 MACH = 1.0994 Q = 599.94 P = 709.08 RN/L = 3.1892

SECTION ( 1)BODY FLAP LOWER DEPENDENT VARIABLE CP

| X/LB | 1.0180 | 1.0460 |
|---|---|---|
| PHI | | |
| .000 | -.3415 | -.2837 |
| 40.000 | -.3163 | -.2735 |

ALPHA ( 3) = 3.931 BETA ( 1) = -3.870 MACH = 1.0960 Q = 598.54 P = 711.89 RN/L = 3.1895

SECTION ( 1)BODY FLAP LOWER DEPENDENT VARIABLE CP

| X/LB | 1.0180 | 1.0460 |
|---|---|---|
| PHI | | |
| .000 | -.3174 | -.2741 |
| 40.000 | -.2484 | -.2287 |

ALPHA ( 3) = 3.932 BETA ( 2) = .189 MACH = 1.0960 Q = 598.54 P = 711.89 RN/L = 3.1895

SECTION ( 1)BODY FLAP LOWER DEPENDENT VARIABLE CP

| X/LB | 1.0180 | 1.0460 |
|---|---|---|
| PHI | | |
| .000 | -.3102 | -.2836 |
| 40.000 | -.2476 | -.2272 |

ALPHA ( 3) = 3.935 BETA ( 3) = 4.249 MACH = 1.0960 Q = 598.54 P = 711.89 RN/L = 3.1895

SECTION ( 1)BODY FLAP LOWER DEPENDENT VARIABLE CP

| X/LB | 1.0180 | 1.0460 |
|---|---|---|
| PHI | | |
| .000 | -.3148 | -.2855 |
| 40.000 | -.2779 | -.2548 |

AMES 11-073(OA148) -140A/B/C/R ORB BODY FLAP LWR (XE8G15)

ALPHA ( 4) = 7.884 BETA ( 1) = -3.865 MACH = 1.0986 Q = 599.29 P = 709.30 RN/L = 3.1886

SECTION ( 1)BODY FLAP LOWER DEPENDENT VARIABLE CP

| X/LB | 1.0180 | 1.0460 |
|---|---|---|
| PHI | | |
| .000 | -.2781 | -.2571 |
| 40.000 | -.2380 | -.2256 |

ALPHA ( 4) = 7.965 BETA ( 2) = .179 MACH = 1.0986 Q = 599.29 P = 709.30 RN/L = 3.1886

SECTION ( 1)BODY FLAP LOWER DEPENDENT VARIABLE CP

| X/LB | 1.0180 | 1.0460 |
|---|---|---|
| PHI | | |
| .000 | -.2540 | -.2419 |
| 40.000 | -.2156 | -.2089 |

ALPHA ( 4) = 7.966 BETA ( 3) = 4.242 MACH = 1.0986 Q = 599.29 P = 709.30 RN/L = 3.1886

SECTION ( 1)BODY FLAP LOWER DEPENDENT VARIABLE CP

| X/LB | 1.0180 | 1.0460 |
|---|---|---|
| PHI | | |
| .000 | -.2738 | -.2531 |
| 40.000 | -.2462 | -.2429 |

ALPHA ( 5) = 11.925 BETA ( 1) = -3.850 MACH = 1.0981 Q = 598.93 P = 709.53 RN/L = 3.1856

SECTION ( 1)BODY FLAP LOWER DEPENDENT VARIABLE CP

| X/LB | 1.0180 | 1.0460 |
|---|---|---|
| PHI | | |
| .000 | -.2199 | -.2161 |
| 40.000 | -.1905 | -.2043 |

ALPHA ( 5) = 11.933 BETA ( 2) = .177 MACH = 1.0981 Q = 598.93 P = 709.53 RN/L = 3.1856

SECTION ( 1)BODY FLAP LOWER DEPENDENT VARIABLE CP

| X/LB | 1.0180 | 1.0460 |
|---|---|---|
| PHI | | |
| .000 | -.2193 | -.2321 |
| 40.000 | -.1993 | -.2005 |

DATE 13 FEB 76 TABULATED PRESSURE DATA - OA148 ( AMES 11-073-1 )

AMES 11-073(OA148) -140A/B/C/R ORB BODY FLAP LWR (XEBG15)

ALPHA ( 5) = 11.928 BETA ( 3) = 4.259 MACH = 1.0981 Q = 598.93 P = 709.53 RN/L = 3.1856

SECTION ( 1)BODY FLAP LOWER DEPENDENT VARIABLE CP

| X/LB | 1.0180 | 1.0460 |
|---|---|---|
| PHI | | |
| .000 | -.2388 | -.2335 |
| 40.000 | -.2411 | -.2454 |

ORIGINAL PAGE IS
OF POOR QUALITY

AMES 11-073(OA148) -140A/B/C/R ORB BODY FLAP LWR (XEBG16) ( 05 AUG 75 )

REFERENCE DATA

SREF = 2690.0000 SQ.FT. XMRP = 1076.6800 IN. XO
LREF = 474.8000 IN. YMRP = .0000 IN. YO
BREF = 935.0680 IN. ZMRP = 375.0000 IN. ZO
SCALE = .0300

PARAMETRIC DATA

RUDDER = .000 SPDBRK = 35.000
BDFLAP = .000 L-ELVN = .000
R-ELVN = .000 MACH = .900

ALPHA ( 1) = -4.023 BETA ( 1) = -3.852 MACH = .90217 Q = 601.77 P = 1056.2 RN/L = 3.5811

SECTION ( 1)BODY FLAP LOWER DEPENDENT VARIABLE CP

| X/LB | 1.0180 | 1.0460 |
|---|---|---|
| PHI | | |
| .000 | -.0756 | -.1493 |
| 40.000 | -.1450 | -.1597 |

ALPHA ( 1) = -3.925 BETA ( 2) = .188 MACH = .90217 Q = 601.77 P = 1056.2 RN/L = 3.5811

SECTION ( 1)BODY FLAP LOWER DEPENDENT VARIABLE CP

| X/LB | 1.0180 | 1.0460 |
|---|---|---|
| PHI | | |
| .000 | -.0713 | -.1504 |
| 40.000 | -.1276 | -.1679 |

ALPHA ( 1) = -3.933 BETA ( 3) = 4.285 MACH = .90217 Q = 601.77 P = 1056.2 RN/L = 3.5811

SECTION ( 1)BODY FLAP LOWER DEPENDENT VARIABLE CP

| X/LB | 1.0180 | 1.0460 |
|---|---|---|
| PHI | | |
| .000 | -.0851 | -.1502 |
| 40.000 | -.1017 | -.1528 |

ALPHA ( 2) = .017 BETA ( 1) = -3.871 MACH = .89983 Q = 599.60 P = 1058.1 RN/L = 3.5748

SECTION ( 1)BODY FLAP LOWER DEPENDENT VARIABLE CP

| X/LB | 1.0180 | 1.0460 |
|---|---|---|
| PHI | | |
| .000 | -.0743 | -.1478 |
| 40.000 | -.1414 | -.1495 |

AMES 11-073(OA148) -140A/B/C/R ORB BODY FLAP LWR (XE8G16)

ALPHA ( 2) = .043 BETA ( 2) = .183 MACH = .89083 Q = 599.69 P = 1058.1 RN/L = 3.5748

SECTION ( 1)BODY FLAP LOWER DEPENDENT VARIABLE CP

| X/LB | 1.0180 | 1.0460 |
|---|---|---|
| PHI | | |
| .000 | -.0836 | -.1568 |
| 40.000 | -.1278 | -.1625 |

ALPHA ( 2) = .037 BETA ( 3) = 4.263 MACH = .89983 Q = 599.69 P = 1058.1 RN/L = 3.5748

SECTION ( 1)BODY FLAP LOWER DEPENDENT VARIABLE CP

| X/LB | 1.0180 | 1.0460 |
|---|---|---|
| PHI | | |
| .000 | -.0819 | -.1460 |
| 40.000 | -.1080 | -.1562 |

ALPHA ( 3) = 3.991 BETA ( 1) = -3.877 MACH = .90107 Q = 600.53 P = 1056.6 RN/L = 3.5722

SECTION ( 1)BODY FLAP LOWER DEPENDENT VARIABLE CP

| X/LB | 1.0180 | 1.0460 |
|---|---|---|
| PHI | | |
| .000 | -.0591 | -.1402 |
| 40.000 | -.1398 | -.1485 |

ALPHA ( 3) = 4.016 BETA ( 2) = .188 MACH = .90107 Q = 600.53 P = 1056.6 RN/L = 3.5722

SECTION ( 1)BODY FLAP LOWER DEPENDENT VARIABLE CP

| X/LB | 1.0180 | 1.0460 |
|---|---|---|
| PHI | | |
| .000 | -.0608 | -.1390 |
| 40.000 | -.1117 | -.1461 |

ALPHA ( 3) = 4.017 BETA ( 3) = 4.257 MACH = .90107 Q = 600.53 P = 1056.6 RN/L = 3.5722

SECTION ( 1)BODY FLAP LOWER DEPENDENT VARIABLE CP

| X/LB | 1.0180 | 1.0460 |
|---|---|---|
| PHI | | |
| .000 | -.0564 | -.1411 |
| 40.000 | -.1017 | -.1520 |

AMES 11-073(OA148) -140A/B/C/R ORB BODY FLAP LWR (XE8G16)

ALPHA ( 4) = 7.978 BETA ( 1) = -3.868 MACH = .90107 Q = 600.53 P = 1056.6 RN/L = 3.5741

SECTION ( 1)BODY FLAP LOWER DEPENDENT VARIABLE CP

| X/LB | 1.0180 | 1.0460 |
|---|---|---|
| PHI | | |
| .000 | -.0397 | -.1308 |
| 40.000 | -.1325 | -.1339 |

ALPHA ( 4) = 7.924 BETA ( 2) = .181 MACH = .90107 Q = 600.53 P = 1056.6 RN/L = 3.5741

SECTION ( 1)BODY FLAP LOWER DEPENDENT VARIABLE CP

| X/LB | 1.0180 | 1.0460 |
|---|---|---|
| PHI | | |
| .000 | -.0453 | -.1309 |
| 40.000 | -.1093 | -.1442 |

ALPHA ( 4) = .921 BETA ( 3) = 4.257 MACH = .90107 Q = 600.53 P = 1056.6 RN/L = 3.5741

SECTION ( 1)BODY FLAP LOWER DEPENDENT VARIABLE CP

| X/LB | 1.0180 | 1.0460 |
|---|---|---|
| PHI | | |
| .000 | -.0458 | -.1291 |
| 40.000 | -.0945 | -.1462 |

ALPHA ( 5) = 11.916 BETA ( 1) = -3.856 MACH = .90000 Q = 599.65 P = 1057.6 RN/L = 3.5745

SECTION ( 1)BODY FLAP LOWER DEPENDENT VARIABLE CP

| X/LB | 1.0180 | 1.0460 |
|---|---|---|
| PHI | | |
| .000 | -.0850 | -.1255 |
| 40.000 | -.1360 | -.1313 |

ALPHA ( 5) = 11.928 BETA ( 2) = .182 MACH = .90000 Q = 599.65 P = 1057.6 RN/L = 3.5745

SECTION ( 1)BODY FLAP LOWER DEPENDENT VARIABLE CP

| X/LB | 1.0180 | 1.0460 |
|---|---|---|
| PHI | | |
| .000 | -.1036 | -.1223 |
| 40.000 | -.1085 | -.1291 |

AMES 11-073(OA148) -140A/B/C/R ORB BODY FLAP LWR (XE8G16)

ALPHA ( 5) = 11.917 BETA ( 3) = 4.273 MACH = .90000 Q = 599.65 P = 1057.6 RN/L = 3.5745

SECTION ( 1)BODY FLAP LOWER DEPENDENT VARIABLE CP

| X/LB | 1.0180 | 1.0460 |
|---|---|---|
| PHI | | |
| .000 | -.0626 | -.1359 |
| 40.000 | -.0838 | -.1421 |

AMES 11-073(OA148) -140A/B/C/R ORB BODY FLAP LWR (XE8G17) ( 05 AUG 75 )

REFERENCE DATA

SREF = 2690.0000 SQ.FT. XMRP = 1076.6800 IN. XO
LREF = 474.8000 IN. YMRP = .0000 IN. YO
BREF = 936.0680 IN. ZMRP = 375.0000 IN. ZO
SCALE = .0300

PARAMETRIC DATA

RUDDER = .000 SPDBRK = 35.000
BDFLAP = .000 L-ELVN = .000
R-ELVN = .000 MACH = .600

ALPHA ( 1) = -4.112 BETA ( 1) = -7.854 MACH = .59694 Q = 595.28 P = 2386.4 RN/L = 4.8216

SECTION ( 1)BODY FLAP LOWER DEPENDENT VARIABLE CP

| X/LB | 1.0180 | 1.0460 |
|---|---|---|
| PHI | | |
| .000 | -.1312 | -.1923 |
| 40.000 | -.1279 | -.1540 |

ALPHA ( 1) = -4.086 BETA ( 2) = -3.838 MACH = .59694 Q = 595.28 P = 2386.4 RN/L = 4.8216

SECTION ( 1)BODY FLAP LOWER DEPENDENT VARIABLE CP

| X/LB | 1.0180 | 1.0460 |
|---|---|---|
| PHI | | |
| .000 | -.1212 | -.1843 |
| 40.000 | -.1231 | -.1582 |

ALPHA ( 1) = -4.079 BETA ( 3) = .201 MACH = .59694 Q = 595.28 P = 2386.4 RN/L = 4.8216

SECTION ( 1)BODY FLAP LOWER DEPENDENT VARIABLE CP

| X/LB | 1.0180 | 1.0460 |
|---|---|---|
| PHI | | |
| .000 | -.1178 | -.1755 |
| 40.000 | -.1355 | -.1614 |

ALPHA ( 1) = -4.086 BETA ( 4) = 4.270 MACH = .59694 Q = 595.28 P = 2386.4 RN/L = 4.8216

SECTION ( 1)BODY FLAP LOWER DEPENDENT VARIABLE CP

| X/LB | 1.0180 | 1.0460 |
|---|---|---|
| PHI | | |
| .000 | -.1229 | -.1767 |
| 40.000 | -.1259 | -.1629 |

AMES 11-073(OA148) -140A/B/C/R ORB BODY FLAP LWR (XE8G17)

ALPHA ( 1) = -4.101 BETA ( 5) = 8.352 MACH = .59694 Q = 595.28 P = 2386.4 RN/L = 4.8216

SECTION ( 1)BODY FLAP LOWER DEPENDENT VARIABLE CP

| X/LB | 1.0180 | 1.0460 |
|---|---|---|
| PHI | | |
| .000 | -.1280 | -.1872 |
| 40.000 | -.1283 | -.1760 |

ALPHA ( 2) = .084 BETA ( 1) = -7.892 MACH = .59642 Q = 594.20 P = 2386.3 RN/L = 4.8159

SECTION ( 1)BODY FLAP LOWER DEPENDENT VARIABLE CP

| X/LB | 1.0180 | 1.0460 |
|---|---|---|
| PHI | | |
| .000 | -.1182 | -.1775 |
| 40.000 | -.1132 | -.1457 |

ALPHA ( 2) = .094 BETA ( 2) = -3.858 MACH = 59642 Q = 594.20 P = 2386.3 RN/L = 4.8159

SECTION ( 1)BODY FLAP LOWER DEPENDENT VARIABLE CP

| X/LB | 1.0180 | 1.0460 |
|---|---|---|
| PHI | | |
| .000 | -.1130 | -.1764 |
| 40.000 | -.1199 | -.1457 |

ALPHA ( 2) = .071 BETA ( 3) = .198 MACH = .59642 Q = 594.20 P = 2386.3 RN/L = 4 8159

SECTION ( 1)BODY FLAP LOWER DEPENDENT VARIABLE CP

| X/LB | 1.0180 | 1.0460 |
|---|---|---|
| PHI | | |
| .000 | -.1170 | -.1730 |
| 40.000 | -.1303 | -.1580 |

ALPHA ( 2) = .068 BETA ( 4) = 4.249 MACH = .59642 Q = 594.20 P = 2386.3 RN/L = 4.8159

SECTION ( 1)BODY FLAP LOWER DEPENDENT VARIABLE CP

| X/LB | 1.0180 | 1.0460 |
|---|---|---|
| PHI | | |
| .000 | -.1290 | -.1766 |
| 40.000 | -.1319 | -.1712 |

AMES 11-073(OA148) -140A/B/C/R ORB BODY FLAP LWR (XEBG17)

ALPHA ( 2) = .061 BETA ( 5) = 8.308 MACH = .59642 Q = 594.20 P = 2386.3 RN/L = 4.8159

SECTION ( 1)BODY FLAP LOWER DEPENDENT VARIABLE CP

| X/LB | 1.0180 | 1.0460 |
|---|---|---|
| PHI | | |
| .000 | -.1200 | -.1751 |
| 40.000 | -.1193 | -.1649 |

ALPHA ( 3) = 4.005 BETA ( 1) = -7.903 MACH = .59616 Q = 593.73 P = 2386.3 RN/L = 4.8137

SECTION ( 1)BODY FLAP LOWER DEPENDENT VARIABLE CP

| X/LB | 1.0180 | 1.0460 |
|---|---|---|
| PHI | | |
| .000 | -.1150 | -.1718 |
| 40.000 | -.1102 | -.1369 |

ALPHA ( 3) = 4.010 BETA ( 2) = -3.866 MACH = .59616 Q = 593.73 P = 2386.3 RN/L = 4.8137

SECTION ( 1)BODY FLAP LOWER DEPENDENT VARIABLE CP

| X/LB | 1.0180 | 1.0460 |
|---|---|---|
| PHI | | |
| .000 | -.1087 | -.1705 |
| 40.000 | -.1118 | -.1348 |

ALPHA ( 3) = 4.008 BETA ( 3) = .197 MACH = .59616 Q = 593.73 P = 2386.3 RN/L = 4.8137

SECTION ( 1)BODY FLAP LOWER DEPENDENT VARIABLE CP

| X/LB | 1.0180 | 1.0460 |
|---|---|---|
| PHI | | |
| .000 | -.1040 | -.1614 |
| 40.000 | -.1155 | -.1446 |

ALPHA ( 3) = 4.011 BETA ( 4) = 4.242 MACH = .59616 Q = 593.73 P = 2386.3 RN/L = 4.8137

SECTION ( 1)BODY FLAP LOWER DEPENDENT VARIABLE CP

| X/LB | 1.0180 | 1.0460 |
|---|---|---|
| PHI | | |
| .000 | -.1101 | -.1678 |
| 40.000 | -.1177 | -.1597 |

AMES 11-073(OA148) -140A/B/C/R ORB BODY FLAP LWR (XE8G17)

ALPHA ( 3) = [illegible]014 BETA ( 5) = 8.290 MACH = .59616 Q = 593.73 P = 2386.3 RN/L = 4.8137

SECTION ( 1)BODY FLAP LOWER DEPENDENT VARIABLE CP

| X/LB | 1.0180 | 1.0460 |
|---|---|---|
| PHI | | |
| .000 | -.1124 | -.1635 |
| 40.000 | -.1143 | -.1640 |

ALPHA ( 4) = 7.901 BETA ( 1) = -7.891 MACH = .59650 Q = 594.32 P = 2386.1 RN/L = 4.8187

SECTION ( 1)BODY FLAP LOWER DEPENDENT VARIABLE CP

| X/LB | 1.0180 | 1.0460 |
|---|---|---|
| PHI | | |
| .000 | -.0950 | -.1698 |
| 40.000 | -.1012 | -.1337 |

ALPHA ( 4) = 7.913 BETA ( 2) = -3.864 MACH = .59650 Q = 594.32 P = 2386.1 RN/L = 4.8187

SECTION ( 1)BODY FLAP LOWER DEPENDENT VARIABLE CP

| X/LB | 1.0180 | 1.0460 |
|---|---|---|
| PHI | | |
| .000 | -.0898 | -.1617 |
| 40.000 | -.0971 | -.1285 |

ALPHA ( 4) = 7.919 BETA ( 3) = .190 MACH = .59650 Q = 594.32 P = 2386.1 RN/L = 4.8187

SECTION ( 1)BODY FLAP LOWER DEPENDENT VARIABLE CP

| X/LB | 1.0180 | 1.0460 |
|---|---|---|
| PHI | | |
| .000 | -.0935 | -.1562 |
| 40.000 | -.1058 | -.1393 |

ALPHA ( 4) = 7.918 BETA ( 4) = 4.240 MACH = .59650 Q = 594.32 P = 2386.1 RN/L = 4.8187

SECTION ( 1)BODY FLAP LOWER DEPENDENT VARIABLE CP

| X/LB | 1.0180 | 1.0460 |
|---|---|---|
| PHI | | |
| .000 | -.0941 | -.1503 |
| 40.000 | -.0996 | -.1442 |

AMES 11-073(OA148) -140A/B/C/R ORB BODY FLAP LWR (XE8G17)

ALPHA ( 4) = 7.914 BETA ( 5) = 8.294 MACH = .59650 Q = 594.32 P = 2386.1 RN/L = 4.8187

SECTION ( 1)BODY FLAP LOWER DEPENDENT VARIABLE CP

| X/LB | 1.0180 | 1.0460 |
|---|---|---|
| PHI | | |
| .000 | -.1058 | -.1701 |
| 40.000 | -.1084 | -.1678 |

ALPHA ( 5) = 11.926 BETA ( 1) = -7.855 MACH = .59628 Q = 593.97 P = 2386.5 RN/L = 4.8170

SECTION ( 1)BODY FLAP LOWER DEPENDENT VARIABLE CP

| X/LB | 1.0180 | 1.0460 |
|---|---|---|
| PHI | | |
| .000 | -.0797 | -.1522 |
| 40.000 | -.0887 | -.1232 |

ALPHA ( 5) = 11.949 BETA ( 2) = -3.840 MACH = .59628 Q = 593.97 P = 2386.5 RN/L = 4.8170

SECTION ( 1)BODY FLAP LOWER DEPENDENT VARIABLE CP

| X/LB | 1.0180 | 1.0460 |
|---|---|---|
| PHI | | |
| .000 | -.0724 | -.1468 |
| 40.000 | -.0829 | -.1177 |

ALPHA ( 5) = 11.954 BETA ( 3) = .189 MACH = .59628 Q = 593.97 P = 2386.5 RN/L = 4.8170

SECTION ( 1)BODY FLAP LOWER DEPENDENT VARIABLE CP

| X/LB | 1.0180 | 1.0460 |
|---|---|---|
| PHI | | |
| .000 | -.0719 | -.1479 |
| 40.000 | -.0897 | -.1301 |

ALPHA ( 5) = 11.952 BETA ( 4) = 4.250 MACH = .59628 Q = 593.97 P = 2386.5 RN/L = 4.8170

SECTION ( 1)BODY FLAP LOWER DEPENDENT VARIABLE CP

| X/LB | 1.0180 | 1.0460 |
|---|---|---|
| PHI | | |
| .000 | -.0806 | -.1434 |
| 40.000 | -.0861 | -.1424 |

AMES 11-073(OA148) -140A/B/C/R ORB BODY FLAP LWR (XEBG17)

ALPHA ( 5) = 11.942 BETA ( 5) = 8.320 MACH = .59828 Q = 593.97 P = 2386.5 RN/L = 4.8170

SECTION ( .)BODY FLAP LOWER DEPENDENT VARIABLE CP

| X/LB | 1.0180 | 1.0460 |
|---|---|---|
| PHI | | |
| .000 | -.0782 | -.1432 |
| 40.000 | -.0951 | -.1518 |

ORIGINAL PAGE IS
OF POOR QUALITY

AMES 11-073(OA148) -140A/B/C/R ORB BODY FLAP LWR (XEBG18) ( 05 AUG 75 )

REFERENCE DATA

SREF = 2690.0000 SQ.FT. XMRP = 1076.6800 IN. XO
LREF = 474.8000 IN. YMRP = .0000 IN. YO
BREF = 936.0680 IN. ZMRP = 375.0000 IN. ZO
SCALE = .0300

PARAMETRIC DATA

RUDDER = .000 SPDBRK = .000
BDFLAP = -11.700 L-ELVN = .000
R-ELVN = .000 MACH = 1.400

ALPHA ( 1) = -4.050 BETA ( 1) = -3.854 MACH = 1.3965 Q = 599.95 P = 439.47 RN/L = 2.9144

SECTION ( 1)BODY FLAP LOWER DEPENDENT VARIABLE CP

| X/LB | 1.0180 | 1.0460 |
|---|---|---|
| PHI | | |
| .000 | -.4451 | -.4585 |
| 40.000 | -.4580 | -.3406 |

ALPHA ( 1) = -4.042 BETA ( 2) = .192 MACH = 1.3965 Q = 599.95 P = 439.47 RN/L = 2.9144

SECTION ( 1)BODY FLAP LOWER DEPENDENT VARIABLE CP

| X/LB | 1.0180 | 1.0460 |
|---|---|---|
| PHI | | |
| .000 | -.4413 | -.4550 |
| 40.000 | -.4271 | -.3461 |

ALPHA ( 1) = -4.05[illegible] BETA ( 3) = 4.285 MACH = 1.3965 Q = 599.95 P = 439.[illegible] RN/L = 2.[illegible]

SECTION ( 1)BODY FLAP LOWER DEPENDENT VARIABLE CP

| X/LB | 1.0180 | 1.0460 |
|---|---|---|
| PHI | | |
| .000 | -.4411 | -.4577 |
| 40.000 | -.4202 | -.3423 |

ALPHA ( 2) = -.030 BETA ( 1) = -3.874 MACH = 1.3950 Q = 599.63 P = 440.18 RN/L = 2.9101

SECTION ( 1)BODY FLAP LOWER DEPENDENT VARIABLE CP

| X/LB | 1.0180 | 1.0460 |
|---|---|---|
| PHI | | |
| .000 | -.4096 | -.4241 |
| 40.000 | -.4355 | -.3196 |

AMES 11-073(OA148) -140A/B/C/R ORB BODY FLAP LWR (XE8G18)

ALPHA ( 2) = -.025 BETA ( 2) = .186 MACH = 1.3950 Q = 599.63 P = 440.18 RN/L = 2.9101

SECTION ( 1)BODY FLAP LOWER DEPENDENT VARIABLE CP

| X/LB | 1.0180 | 1.0460 |
|---|---|---|
| PHI | | |
| .000 | -.4033 | -.4199 |
| 40.000 | -.4031 | -.3136 |

ALPHA ( 2) = -.030 BETA ( 3) = 4.265 MACH = 1.3950 Q = 599.63 P = 440.18 RN/L = 2.9101

SECTION ( 1)BODY FLAP LOWER DEPENDENT VARIABLE CP

| X/LB | 1.0180 | 1.0460 |
|---|---|---|
| PHI | | |
| .000 | -.4083 | -.4271 |
| 40.000 | -.3952 | -.3082 |

ALPHA ( 3) = 3.919 BETA ( 1) = -3.877 MACH = 1.3940 Q = 599.41 P = 440.65 RN/L = 2.9155

SECTION ( 1)BODY FLAP LOWER DEPENDENT VARIABLE CP

| X/LB | 1.0180 | 1.0460 |
|---|---|---|
| PHI | | |
| .000 | -.3749 | -.3899 |
| 40.000 | -.3925 | -.2839 |

ALPHA ( 3) = 3.922 BETA ( 2) = .185 MACH = 1.3940 Q = 599.41 P = 440.65 RN/L = 2.9155

SECTION ( 1)BODY FLAP LOWER DEPENDENT VARIABLE CP

| X/LB | 1.0180 | 1.0460 |
|---|---|---|
| PHI | | |
| .000 | -.3740 | -.3906 |
| 40.000 | -.3714 | -.2832 |

ALPHA ( 3) = 3.923 BETA ( 3) = 4.255 MACH = 1.3940 Q = 599.41 P = 440.65 RN/L = 2.9155

SECTION ( 1)BODY FLAP LOWER DEPENDENT VARIABLE CP

| X/LB | 1.0180 | 1.0460 |
|---|---|---|
| PHI | | |
| .000 | -.3774 | -.3954 |
| 40.000 | -.3535 | -.2745 |

AMES 11-073(OA148) -140A/B/C/R ORB BODY FLAP LWR (XEBG18)

ALPHA ( 4) = 7.792 BETA ( 1) = -3.867 MACH = 1.3956 Q = 599.84 P = 439.94 RN/L = 2.9129

SECTION ( 1)BODY FLAP LOWER DEPENDENT VARIABLE CP

| X/LB | 1.0180 | 1.0460 |
|---|---|---|
| PHI | | |
| .000 | -.3460 | -.3593 |
| 40.000 | -.3400 | -.2510 |

ALPHA ( 4) = 7.791 BETA ( 2) = .182 MACH = 1.3956 Q = 599.84 P = 439.94 RN/L = 2.9129

SECTION ( 1)BODY FLAP LOWER DEPENDENT VARIABLE CP

| X/LB | 1.0180 | 1.0460 |
|---|---|---|
| PHI | | |
| .000 | -.3396 | -.3555 |
| 40.000 | -.3449 | -.2484 |

ALPHA ( 4) = 7.919 BETA ( 3) = 4.252 MACH = 1.3956 Q = 599.84 P = 439.94 RN/L = 2.9129

SECTION ( 1)BODY FLAP LOWER DEPENDENT VARIABLE CP

| X/LB | 1.0180 | 1.0460 |
|---|---|---|
| PHI | | |
| .000 | -.3460 | -.3593 |
| 40.000 | -.3579 | -.2622 |

ALPHA ( 5) = 11.807 BETA ( 1) = -3.848 MACH = 1.3965 Q = 599.65 P = 439.24 RN/L = 2.9163

SECTION ( 1)BODY FLAP LOWER DEPENDENT VARIABLE CP

| X/LB | 1.0180 | 1.0460 |
|---|---|---|
| PHI | | |
| .000 | -.3138 | -.3314 |
| 40.000 | -.3383 | -.2336 |

ALPHA ( 5) = 11.815 BETA ( 2) = .187 MACH = 1.3965 Q = 599.65 P = 439.24 RN/L = 2.9163

SECTION ( 1)BODY FLAP LOWER DEPENDENT VARIABLE CP

| X/LB | 1.0180 | 1.0460 |
|---|---|---|
| PHI | | |
| .000 | -.3137 | -.3349 |
| 40.000 | -.3358 | -.2762 |

AMES 11-073(OA148) -140A/B/C/R ORB BODY FLAP LWR (XE8318)

ALPHA ( 5) = 11.810 BETA ( 3) = 4.268 MACH = 1.3965 Q = 599.65 P = 439.24 RN/L = 2.9163

SECTION ( 1)BODY FLAP LOWER DEPENDENT VARIABLE CP

| X/LB | 1.0180 | 1.0460 |
|---|---|---|
| PHI | | |
| .000 | -.3179 | -.3381 |
| 40.000 | -.3450 | -.3298 |

ALPHA ( 6) = 15.906 BETA ( 1) = -3.833 MACH = 1.3951 Q = 599.73 P = 440.18 RN/L = 2.9184

SECTION ( 1)BODY FLAP LOWER DEPENDENT VARIABLE CP

| X/LB | 1.0180 | 1.0460 |
|---|---|---|
| PHI | | |
| .000 | -.2989 | -.3074 |
| 40.000 | -.3248 | -.3067 |

ALPHA ( 6) = 15.920 BETA ( 2) = .184 MACH = 1.3951 Q = 599.73 P = 440.18 RN/L = 2.9184

SECTION ( 1)BODY FLAP LOWER DEPENDENT VARIABLE CP

| X/LB | 1.0180 | 1.0460 |
|---|---|---|
| PHI | | |
| .000 | -.2842 | -.3072 |
| 40.000 | -.3198 | -.3191 |

ALPHA ( 6) = 15.910 BETA ( 3) = 4.299 MACH = 1.3951 Q = 599.73 P = 440.18 RN/L = 2.9184

SECTION ( 1)BODY FLAP LOWER DEPENDENT VARIABLE CP

| X/LB | 1.0180 | 1.0460 |
|---|---|---|
| PHI | | |
| .000 | -.2817 | -.2993 |
| 40.000 | -.3181 | -.3235 |

AMES 11-073(OA148) -140A/B/C/R ORB BODY FLAP LWR (XEBG1S) ( 05 AUG 75 )

REFERENCE DATA

SREF = 2690.0000 SQ.FT. XMRP = 1076.6800 IN. XO
LREF = 474.8000 IN. YMRP = .0000 IN. YO
BREF = 936.0690 IN. ZMRP = 375.0000 IN. ZO
SCALE = .0300

PARAMETRIC DATA

RUDDER = .000 SPDBRK = .000
BDFLAP = -11.700 L-ELVN = .000
R-ELVN = .000 MACH = 1.250

ALPHA ( 1) = -4.048 BETA ( 1) = -3.848 MACH = 1.2478 Q = 600.12 P = 550.64 RN/L = 3.0180

SECTION ( 1)BODY FLAP LOWER DEPENDENT VARIABLE CP

| X/LB | 1.0180 | 1.0460 |
|---|---|---|
| PHI | | |
| .000 | -.5510 | -.5712 |
| 40.000 | -.5384 | -.3769 |

ALPHA ( 1) = -3.974 BETA ( 2) = .192 MACH = 1.2478 Q = 600.12 P = 550.64 RN/L = 3.0180

SECTION ( 1)BODY FLAP LOWER DEPENDENT VARIABLE CP

| X/LB | 1.0180 | 1.0460 |
|---|---|---|
| PHI | | |
| .000 | -.5483 | -.5628 |
| 40.000 | -.4944 | -.3880 |

ALPHA ( 1) = -3.984 BETA ( 3) = 4.283 MACH = 1.2478 Q = 600.12 P = 550.54 RN/L = 3.0180

SECTION ( 1)BODY FLAP LOWER DEPENDENT VARIABLE CP

| X/LB | 1.0180 | 1.0460 |
|---|---|---|
| PHI | | |
| .000 | -.5472 | -.5552 |
| 40.000 | -.5009 | -.4089 |

ALPHA ( 2) = -.051 BETA ( 1) = -3.861 MACH = 1.2471 Q = 599.71 P = 550.87 RN/L = 3.0179

SECTION ( 1)BODY FLAP LOWER DEPENDENT VARIABLE CP

| X/LB | 1.0180 | 1.0460 |
|---|---|---|
| PHI | | |
| .000 | -.5108 | -.5295 |
| 40.000 | -.5022 | -.3520 |

AMES 11-073(OA148) -140A/B/C/R ORB BODY FLAP LWR (XE8G19)

ALPHA ( 2) = -.007 BETA ( 2) = .182 MACH = 1.2471 Q = 599.71 P = 550.87 RN/L = 3.0179

SECTION ( 1)BODY FLAP LOWER DEPENDENT VARIABLE CP

| X/LB | 1.0180 | 1.0460 |
|---|---|---|
| PHI | | |
| .000 | -.5084 | -.5267 |
| 40.000 | -.4711 | -.3623 |

ALPHA ( 2) = -.013 BETA ( 3) = 4.263 MACH = 1.2471 Q = 599.71 P = 550.87 RN/L = 3.0179

SECTION ( 1)BODY FLAP LOWER DEPENDENT VARIABLE CP

| X/LB | 1.0180 | 1.0460 |
|---|---|---|
| PHI | | |
| .000 | -.5139 | -.5315 |
| 40.000 | -.4705 | -.3700 |

ALPHA ( 3) = 3.859 BETA ( 1) = -3.973 MACH = 1.2484 Q = 600.53 P = 550.41 RN/L = 3.0214

SECTION ( 1)BODY FLAP LOWER DEPENDENT VARIABLE CP

| X/LB | 1.0180 | 1.0460 |
|---|---|---|
| PHI | | |
| .000 | -.4755 | -.4959 |
| 40.000 | -.4610 | -.3267 |

ALPHA ( 3) = 3.906 BETA ( 2) = .178 MACH = 1.2484 Q = 600.53 P = 550.41 RN/L = 3.0214

SECTION ( 1)BODY FLAP LOWER DEPENDENT VARIABLE CP

| X/LB | 1.0180 | 1.0460 |
|---|---|---|
| PHI | | |
| .000 | -.4698 | -.4902 |
| 40.000 | -.4446 | -.3273 |

ALPHA ( 3) = 3.928 BETA ( 3) = 4.253 MACH = 1.2484 Q = 600.53 P = 550.41 RN/L = 3.0214

SECTION ( 1)BODY FLAP LOWER DEPENDENT VARIABLE CP

| X/LB | 1.0180 | 1.0460 |
|---|---|---|
| PHI | | |
| .000 | -.4745 | -.4940 |
| 40.000 | -.4321 | -.3195 |

AMES 11-073(OA148) -140A/B/C/R ORB BODY FLAP LWR (XE8G19)

ALPHA ( 4) = 7.851 BETA ( 1) = -3.877 MACH = 1.2474 Q = 600.07 P = 550.87 RN/L = 3.0223

SECTION ( 1)BODY FLAP LOWER DEPENDENT VARIABLE CP

| X/LB | 1.0180 | 1.0460 |
|---|---|---|
| PHI | | |
| .000 | -.4432 | -.4631 |
| 40.000 | -.4200 | -.3000 |

ALPHA ( 4) = 7.971 BETA ( 2) = .182 MACH = 1.2474 Q = 600.07 P = 550.87 RN/L = 3.0223

SECTION ( 1)BODY FLAP LOWER DEPENDENT VARIABLE CP

| X/LB | 1.0180 | 1.0460 |
|---|---|---|
| PHI | | |
| .000 | -.4443 | -.4675 |
| 40.000 | -.4156 | -.3022 |

ALPHA ( 4) = 7.972 BETA ( 3) = 4.253 MACH = 1.2474 Q = 600.07 P = 550.87 RN/L = 3.0223

SECTION ( 1)BODY FLAP LOWER DEPENDENT VARIABLE CP

| X/LB | 1.0180 | 1.0460 |
|---|---|---|
| PHI | | |
| .000 | -.4476 | -.4682 |
| 40.000 | -.4440 | -.3096 |

ALPHA ( 5) = 11.905 BETA ( 1) = -3.844 MACH = 1.2483 Q = 600.41 P = 550.41 RN/L = 3.0229

SECTION ( 1)BODY FLAP LOWER DEPENDENT VARIABLE CP

| X/LB | 1.0180 | 1.0460 |
|---|---|---|
| PHI | | |
| .000 | -.4191 | -.4412 |
| 40.000 | -.4033 | -.2789 |

ALPHA ( 5) = 11.915 BETA ( 2) = .187 MACH = 1.2483 Q = 600.41 P = 550.41 RN/L = 3.0228

SECTION ( 1)BODY FLAP LOWER DEPENDENT VARIABLE CP

| X/LB | 1.0180 | 1.0460 |
|---|---|---|
| PHI | | |
| .000 | -.4178 | -.4389 |
| 40.000 | -.4271 | -.2941 |

DATE 13 FEB 76 TABULATED PRESSURE DATA - OA148 ( AMES 11-073-1 )

AMES 11-073(OA148) -140A/B/C/R ORB BODY FLAP LWR (XE8G19)

ALPHA ( 5) = 11.907 BETA ( 3) = 4.269 MACH = 1.2483 Q = 600.41 P = 550.41 RN/L = 3.0228

SECTION ( 1)BODY FLAP LOWER DEPENDENT VARIABLE CP

| X/LB | 1.0180 | 1.0460 |
|---|---|---|
| PHI | | |
| .000 | -.4201 | -.4453 |
| 40.000 | -.4417 | -.3175 |

AMES 11-073(OA148) -140A/B/C/R ORB BODY FLAP LWR (XE8G20) ( 05 AUG 75 )

REFERENCE DATA

SREF = 2690.0000 SQ.FT. XMRP = 1076.6800 IN. XO
LREF = 474.8000 IN. YMRP = .0000 IN. YO
BREF = 936.0680 IN. ZMRP = 375.0000 IN. ZO
SCALE = .0300

PARAMETRIC DATA

RUDDER = .000 SPDBRK = .000
BDFLAP = -11.700 L-ELVN = .000
R-ELVN = .000 MACH = 1.100

ALPHA ( 1) = -4.047 BETA ( 1) = -3.843 MACH = 1.1022 Q = 601.66 P = 707.48 RN/L = 3.1893

SECTION ( 1)BODY FLAP LOWER DEPENDENT VARIABLE CP

| X/LB | 1.0180 | 1.0460 |
|---|---|---|
| PHI | | |
| .000 | -.7043 | -.6470 |
| 40.000 | -.5355 | -.3963 |

ALPHA ( 1) = -3.971 BETA ( 2) = .189 MACH = 1.1022 Q = 601.66 P = 707.48 RN/L = 3.1893

SECTION ( 1)BODY FLAP LOWER DEPENDENT VARIABLE CP

| X/LB | 1.0180 | 1.0460 |
|---|---|---|
| PHI | | |
| .000 | -.6944 | -.6733 |
| 40.000 | -.5059 | -.4080 |

ALPHA ( 1) = -3.999 BETA ( 3) = 4.285 MACH = 1.1022 Q = 601.66 P = 707.48 RN/L = 3.1893

SECTION ( 1)BODY FLAP LOWER DEPENDENT VARIABLE CP

| X/LB | 1.0180 | 1.0460 |
|---|---|---|
| PHI | | |
| .000 | -.6985 | -.6564 |
| 40.000 | -.5595 | -.4700 |

ALPHA ( 2) = -.036 BETA ( 1) = -3.867 MACH = 1.1011 Q = 601.17 P = 708.39 RN/L = 3.1906

SECTION ( 1)BODY FLAP LOWER DEPENDENT VARIABLE CP

| X/LB | 1.0180 | 1.0460 |
|---|---|---|
| PHI | | |
| .000 | -.6548 | -.6549 |
| 40.000 | -.5316 | -.3671 |

DATE 13 FEB 76 TABULATED PRESSURE DATA OA148 ( AMES 11-073-1 )

AMES 11-073(OA148) -140A/B/C/R ORB BODY FLAP LWR (XE8G20)

ALPHA ( 2) = -.059 BETA ( 2) = .183 MACH = 1.1011 Q = 601.17 P = 708.39 RN/L = 3.1906

SECTION ( 1)BODY FLAP LOWER DEPENDENT VARIABLE CP

| X/LB | 1.0180 | 1.0460 |
|---|---|---|
| PHI | | |
| .000 | -.6502 | -.6678 |
| 40.000 | -.4868 | -.3901 |

ALPHA ( 2) = -.052 BETA ( 3) = 4.261 MACH = 1.1011 Q = 601.17 P = 708.39 RN/L = 3.1906

SECTION ( 1)BODY FLAP LOWER DEPENDENT VARIABLE CP

| X/LB | 1.0180 | 1.0460 |
|---|---|---|
| PHI | | |
| .000 | -.6593 | -.6527 |
| 40.000 | -.5222 | -.4304 |

ALPHA ( 3) = 3.856 BETA ( 1) = -3.869 MACH = 1.1013 Q = 601.26 P = 708.16 RN/L = 3.1838

SECTION ( 1)BODY FLAP LOWER DEPENDENT VARIABLE CP

| X/LB | 1.0180 | 1.0460 |
|---|---|---|
| PHI | | |
| .000 | -.6434 | -.6572 |
| 40.000 | -.5356 | -.3787 |

ALPHA ( 3) = 3.924 BETA ( 2) = .189 MACH = 1.1013 Q = 601.26 P = 708.16 RN/L = 3.1838

SECTION ( 1)BODY FLAP LOWER DEPENDENT VARIABLE CP

| X/LB | 1.0180 | 1.0460 |
|---|---|---|
| PHI | | |
| .000 | -.6320 | -.6470 |
| 40.000 | -.4967 | -.3784 |

ALPHA ( 3) = 3.921 BETA ( 3) = 4.251 MACH = 1.1013 Q = 601.26 P = 708.16 RN/L = 3.1838

SECTION ( 1)BODY FLAP LOWER DEPENDENT VARIABLE CP

| X/LB | 1.0180 | 1.0460 |
|---|---|---|
| PHI | | |
| .000 | -.6400 | -.6530 |
| 40.000 | -.4919 | -.4006 |

ORIGINAL PAGE IS
OF POOR QUALITY

AMES 11-073(OA148) -140A/B/C/R ORB BODY FLAP LWR (XE8G20)

ALPHA ( 4) = 7.863 BETA ( 1) = -3.864 MACH = 1.1008 Q = 600.53 P = 707.91 RN/L = 3.1857

SECTION ( 1)BODY FLAP LOWER DEPENDENT VARIABLE CP

| X/LB | 1.0180 | 1.0460 |
|---|---|---|
| PHI | | |
| .000 | -.6082 | -.6243 |
| 40.000 | -.5261 | -.3805 |

ALPHA ( 4) = 7.865 BETA ( 2) = .180 MACH = 1.1008 Q = 600.53 P = 707.91 RN/L = 3.1857

SECTION ( 1)BODY FLAP LOWER DEPENDENT VARIABLE CP

| X/LB | 1.0180 | 1.0460 |
|---|---|---|
| PHI | | |
| .000 | -.6065 | -.6258 |
| 40.000 | -.4896 | -.3701 |

ALPHA ( 4) = 7.863 BETA ( 3) = 4.247 MACH = 1.1008 Q = 600.53 P = 707.91 RN/L = 3.1857

SECTION ( 1)BODY FLAP LOWER DEPENDENT VARIABLE CP

| X/LB | 1.0180 | 1.0460 |
|---|---|---|
| PHI | | |
| .000 | -.6112 | -.6308 |
| 40.000 | -.4819 | -.3776 |

ALPHA ( 5) = 11.903 BETA ( 1) = -3.846 MACH = 1.1003 Q = 600.53 P = 708.60 RN/L = 3.1882

SECTION ( 1)BODY FLAP LOWER DEPENDENT VARIABLE CP

| X/LB | 1.0180 | 1.0460 |
|---|---|---|
| PHI | | |
| .000 | -.5839 | -.5992 |
| 40.000 | -.4859 | -.3541 |

ALPHA ( 5) = 11.911 BETA ( 2) = .188 MACH = 1.1003 Q = 600.53 P = 708.60 RN/L = 3.1882

SECTION ( 1)BODY FLAP LOWER DEPENDENT VARIABLE CP

| X/LB | 1.0180 | 1.0460 |
|---|---|---|
| PHI | | |
| .000 | -.5761 | -.5982 |
| 40.000 | -.4641 | -.3358 |

AMES 11-073(OA148) -140A/B/C/R ORB BODY FLAP LWR (XE8G20)

ALPHA ( 5) = 11.905 BETA ( 3) = 4.263 MACH = 1.1003 Q = 600.53 P = 708.60 RN/L = 3.1882

SECTION ( 1)BODY FLAP LOWER DEPENDENT VARIABLE CP

| X/LB | 1.0180 | 1.0460 |
|---|---|---|
| PHI | | |
| .000 | -.5834 | -.6080 |
| 40.000 | -.5070 | -.3447 |

AMES 11-073(OA148) -140A/B/C/R ORB BODY FLAP LWR (XE8G21) ( 05 AUG 75 )

REFERENCE DATA

SREF = 2690.0000 SQ.FT. XMRP = 1076.6800 IN. XO
LREF = 474.8000 IN. YMRP = .0000 IN. YO
BREF = 936.0680 IN. ZMRP = 375.0000 IN. ZO
SCALE = .0300

PARAMETRIC DATA

RUDDER = .000 SPDBRK = .000
BDFLAP = -11.700 L-ELVN = .000
R-ELVN = .000 MACH = .900

ALPHA ( 1) = -4.037 BETA ( 1) = -3.849 MACH = .90000 Q = 600.22 P = 1058.5 RN/L = 3.5693

SECTION ( 1)BODY FLAP LOWER DEPENDENT VARIABLE CP

| X/LB | 1.0180 | 1.0460 |
|---|---|---|
| PHI | | |
| .000 | -.4579 | -.2801 |
| 40.000 | -.3742 | -.2803 |

ALPHA ( 1) = -4.030 BETA ( 2) = .192 MACH = .90000 Q = 600.22 P = 1058.5 RN/L = 3.5693

SECTION ( 1)BODY FLAP LOWER DEPENDENT VARIABLE CP

| X/LB | 1.0180 | 1.0460 |
|---|---|---|
| PHI | | |
| .000 | -.4787 | -.2921 |
| 40.000 | -.3375 | -.2439 |

ALPHA ( 1) = -4.042 BETA ( 3) = 4.289 MACH = .90000 Q = 600.22 P = 1058.5 RN/L = 3.5693

SECTION ( 1)BODY FLAP LOWER DEPENDENT VARIABLE CP

| X/LB | 1.0180 | 1.0460 |
|---|---|---|
| PHI | | |
| .000 | -.4638 | -.2948 |
| 40.000 | -.3317 | -.2038 |

ALPHA ( 2) = .024 BETA ( 1) = -3.875 MACH = .89917 Q = 599.08 P = 1058.5 RN/L = 3.5682

SECTION ( 1)BODY FLAP LOWER DEPENDENT VARIABLE CP

| X/LB | 1.0180 | 1.0460 |
|---|---|---|
| PHI | | |
| .000 | -.4776 | -.2974 |
| 40.000 | -.3882 | -.2857 |

AMES 11-073(OA148) -140A/B/C/R ORB BODY FLAP LWR (XE8G21)

ALPHA ( 2) = .031 BETA ( 2) = .186 MACH = .89917 Q = 599.08 P = 1058.5 RN/L = 3.5682

SECTION ( 1)BODY FLAP LOWER DEPENDENT VARIABLE CP

| X/LB | 1.0180 | 1.0460 |
|---|---|---|
| PHI | | |
| .000 | -.4811 | -.2921 |
| 40.000 | -.3439 | -.2290 |

ALPHA ( 2) = .021 BETA ( 3) = 4.265 MACH = .89917 Q = 599.08 P = 1058.5 RN/L = 3.5682

SECTION ( 1)BODY FLAP LOWER DEPENDENT VARIABLE CP

| X/LB | 1.0180 | 1.0460 |
|---|---|---|
| PHI | | |
| .000 | -.4597 | -.2878 |
| 40.000 | -.3207 | -.1962 |

ALPHA ( 3) = 3.922 BETA ( 1) = -3.878 MACH = .89950 Q = 599.38 P = 1058.3 RN/L = 3.5682

SECTION ( 1)BODY FLAP LOWER DEPENDENT VARIABLE CP

| X/LB | 1.0180 | 1.0460 |
|---|---|---|
| PHI | | |
| .000 | -.4595 | -.2824 |
| 40.000 | -.3781 | -.2615 |

ALPHA ( 3) = 3.975 BETA ( 2) = .188 MACH = .89950 Q = 599.38 P = 1058.3 RN/L = 3.5682

SECTION ( 1)BODY FLAP LOWER DEPENDENT VARIABLE CP

| X/LB | 1.0180 | 1.0460 |
|---|---|---|
| PHI | | |
| .000 | -.4741 | -.2819 |
| 40.000 | -.3654 | -.2164 |

ALPHA ( 3) = 3.972 BETA ( 3) = 4.260 MACH = .89950 Q = 599.38 P = 1058.3 RN/L = 3.5682

SECTION ( 1)BODY FLAP LOWER DEPENDENT VARIABLE CP

| X/LB | 1.0180 | 1.0460 |
|---|---|---|
| PHI | | |
| .000 | -.4833 | -.2908 |
| 40.000 | -.3434 | -.2073 |

AMES 11-073(OA148) -140A/B/C/R ORB BODY FLAP LWR (XEBG21)

ALPHA ( 4) = 7.906 BETA ( 1) = -3.870 MACH = .89943 Q = 599.41 P = 1058.5 RN/L = 3.5684

SECTION ( 1)BODY FLAP LOWER DEPENDENT VARIABLE CP

| X/LB | 1.0180 | 1.0460 |
|---|---|---|
| PHI | | |
| .000 | -.4750 | -.2939 |
| 40.000 | -.3996 | -.2359 |

ALPHA ( 4) = 8.017 BETA ( 2) = .186 MACH = .89943 Q = 599.41 P = 1058.5 RN/L = 3.5684

SECTION ( 1)BODY FLAP LOWER DEPENDENT VARIABLE CP

| X/LB | 1.0180 | 1.0460 |
|---|---|---|
| PHI | | |
| .000 | -.4634 | -.2922 |
| 40.000 | -.3615 | -.2285 |

ALPHA ( 4) = 8.014 BETA ( 3) = 4.257 MACH = .89943 Q = 599.41 P = 1058.5 RN/L = 3.5684

SECTION ( 1)BODY FLAP LOWER DEPENDENT VARIABLE CP

| X/LB | 1.0180 | 1.0460 |
|---|---|---|
| PHI | | |
| .000 | -.4851 | -.3134 |
| 40.000 | -.3331 | -.2008 |

ALPHA ( 5) = 11.899 BETA ( 1) = -3.861 MACH = .90017 Q = 600.39 P = 1058.5 RN/L = 3.5727

SECTION ( 1)BODY FLAP LOWER DEPENDENT VARIABLE CP

| X/LB | 1.0180 | 1.0460 |
|---|---|---|
| PHI | | |
| .000 | -.5441 | -.3715 |
| 40.000 | -.4523 | -.2657 |

ALPHA ( 5) = 11.956 BETA ( 2) = .190 MACH = .90017 Q = 600.39 P = 1058.5 RN/L = 3.5727

SECTION ( 1)BODY FLAP LOWER DEPENDENT VARIABLE CP

| X/LB | 1.0180 | 1.0460 |
|---|---|---|
| PHI | | |
| .000 | -.5792 | -.3593 |
| 40.000 | -.4500 | -.2286 |

DATE 13 FEB 76 TABULATED PRESSURE DATA - OA148 ( AMES 11-073-1 ) (XE8G21)

AMES 11-073(OA148) -140A/B/C/R ORB BODY FLAP LWR

ALPHA ( 5) = 11.948 BETA ( 3) = 4.274 MACH = .90017 Q = 600.39 P = 1058.5 RN/L = 3.5727

SECTION ( 1)BODY FLAP LOWER DEPENDENT VARIABLE CP

| X/LB | 1.0180 | 1.0460 |
|---|---|---|
| PHI | | |
| .000 | -.5860 | -.3907 |
| 40.000 | -.3710 | -.2309 |

AMES 11-073(OA148) -140A/B/C/R ORS BODY FLAP LWR (XEBG22) ( 05 AUG 75 )

REFERENCE DATA

SREF = 2690.0000 SQ.FT. XMRP = 1076.6800 IN. XO
LREF = 474.8000 IN. YMRP = .0000 IN. YO
BREF = 936.0680 IN. ZMRP = 375.0000 IN. ZO
SCALE = .0300

PARAMETRIC DATA

RUDDER = .000 SPDBRK = .000
BDFLAP = -11.700 L-ELVN = .000
R-ELVN = .000 MACH = .600

ALPHA ( 1) = -4.045 BETA ( 1) = -7.856 MACH = .59680 Q = 594.79 P = 2385.6 RN/L = 4.8530

SECTION ( 1)BODY FLAP LOWER DEPENDENT VARIABLE CP

| X/LB | 1.0180 | 1.0460 |
|---|---|---|
| PHI | | |
| .000 | -.3451 | -.2411 |
| 40.000 | -.3101 | -.2812 |

ALPHA ( 1) = -3.970 BETA ( 2) = -3.843 MACH = .59680 Q = 594.79 P = 2385.6 RN/L = 4.8530

SECTION ( 1)BODY FLAP LOWER DEPENDENT VARIABLE CP

| X/LB | 1.0180 | 1.0460 |
|---|---|---|
| PHI | | |
| .000 | -.3409 | -.2327 |
| 40.000 | -.2649 | -.2176 |

ALPHA ( 1) = -3.957 BETA ( 3) = .189 MACH = .59680 Q = 594.79 P = 2385.6 RN/L = 4.8530

SECTION ( 1)BODY FLAP LOWER DEPENDENT VARIABLE CP

| X/LB | 1.0180 | 1.0460 |
|---|---|---|
| PHI | | |
| .000 | -.3365 | -.2265 |
| 40.000 | -.2647 | -.1938 |

ALPHA ( 1) = -3.965 BETA ( 4) = 4.271 MACH = .59680 Q = 594.79 P = 2385.6 RN/L = 4.8530

SECTION ( 1)BODY FLAP LOWER DEPENDENT VARIABLE CP

| X/LB | 1.0180 | 1.0460 |
|---|---|---|
| PHI | | |
| .000 | -.3459 | -.2295 |
| 40.000 | -.2506 | -.1677 |

AMES 11-073(OA148) -140A/B/C/R ORB BODY FLAP LWR (XEBG22)

ALPHA ( 1) = -4.005 BETA ( 5) = 8.350 MACH = .59680 Q = 594.79 P = 2385.6 RN/L = 4.8530

SECTION ( 1)BODY FLAP LOWER DEPENDENT VARIABLE CP

| X/LB | 1.0180 | 1.0460 |
|---|---|---|
| PHI | | |
| .000 | -.3414 | -.2352 |
| 40.000 | -.2338 | -.1509 |

ALPHA ( 2) = -.025 BETA ( 1) = -7.896 MACH = .59678 Q = 594.66 P = 2385.3 RN/L = 4.8568

SECTION ( 1)BODY FLAP LOWER DEPENDENT VARIABLE CP

| X/LB | 1.0180 | 1.0460 |
|---|---|---|
| PHI | | |
| .000 | -.3519 | -.2416 |
| 40.000 | -.2966 | -.2554 |

ALPHA ( 2) = -.014 BETA ( 2) = -3.863 MACH = .59678 Q = 594.66 P = 2385.3 RN/L = 4.8568

SECTION ( 1)BODY FLAP LOWER DEPENDENT VARIABLE CP

| X/LB | 1.0180 | 1.0460 |
|---|---|---|
| PHI | | |
| .000 | -.3422 | -.2253 |
| 40.000 | -.2507 | -.2078 |

ALPHA ( 2) = .070 BETA ( 3) = .189 MACH = .59678 Q = 594.66 P = 2385.3 RN/L = 4.8568

SECTION ( 1)BODY FLAP LOWER DEPENDENT VARIABLE CP

| X/LB | 1.0180 | 1.0460 |
|---|---|---|
| PHI | | |
| .000 | -.3451 | -.2224 |
| 40.000 | -.2570 | -.1787 |

ALPHA ( 2) = .053 BETA ( 4) = 4.250 MACH = .59678 Q = 594.66 P = 2385.3 RN/L = 4.8568

SECTION ( 1)BODY FLAP LOWER DEPENDENT VARIABLE CP

| X/LB | 1.0180 | 1.0460 |
|---|---|---|
| PHI | | |
| .000 | -.3500 | -.2313 |
| 40.000 | -.2484 | -.1716 |

ORIGINAL PAGE IS OF POOR QUALITY

AMES 11-073(OA148) -140A/B/C/R ORB BODY FLAP LWR (XEBG22)

ALPHA ( 2) = .058 BETA ( 5) = 8.310 MACH = .59678 Q = 594.66 P = 2385.3 RN/L = 4.8568

SECTION ( 1)BODY FLAP LOWER DEPENDENT VARIABLE CP

| X/LB | 1.0180 | 1.0460 |
|---|---|---|
| PHI | | |
| .000 | -.3461 | -.2382 |
| 40.000 | -.2294 | -.1544 |

ALPHA ( 3) = 3.933 BETA ( 1) = -7.911 MACH = .59760 Q = 596.20 P = 2385.0 RN/L = 4.8680

SECTION ( 1)BODY FLAP LOWER DEPENDENT VARIABLE CP

| X/LB | 1.0180 | 1.0460 |
|---|---|---|
| PHI | | |
| .000 | -.3563 | -.2399 |
| 40.000 | -.2835 | -.2357 |

ALPHA ( 3) = 3.936 BETA ( 2) = -3.365 MACH = .59760 Q = 596.20 P = 2385.0 RN/L = 4.8680

SECTION ( 1)BODY FLAP LOWER DEPENDENT VARIABLE CP

| X/LB | 1.0180 | 1.0460 |
|---|---|---|
| PHI | | |
| .000 | -.3519 | -.2253 |
| 40.000 | -.2570 | -.2002 |

ALPHA ( 3) = 3.935 BETA ( 3) = .172 MACH = .59760 Q = 596.20 P = 2385.0 RN/L = 4.8680

SECTION ( 1)BODY FLAP LOWER DEPENDENT VARIABLE CP

| X/LB | 1.0180 | 1.0460 |
|---|---|---|
| PHI | | |
| .000 | -.3469 | -.2187 |
| 40.000 | -.2578 | -.1749 |

ALPHA ( 3) = 4.026 BETA ( 4) = 4.240 MACH = .59760 Q = 596.20 P = 2385.0 RN/L = 4.8680

SECTION ( 1)BODY FLAP LOWER DEPENDENT VARIABLE CP

| X/LB | 1.0180 | 1.0460 |
|---|---|---|
| PHI | | |
| .000 | -.3497 | -.2254 |
| 40.000 | -.2437 | -.1610 |

AMES 11-073(OA148) -140A/B/C/R ORB BODY FLAP LWR (XE8G22)

ALPHA ( 3) = 4.030 BETA ( 5) = 8.292 MACH = .59760 Q = 596.20 P = 2385.0 RN/L = 4.8680

SECTION ( 1)BODY FLAP LOWER DEPENDENT VARIABLE CP

| X/LB | 1.0180 | 1.0460 |
|---|---|---|
| PHI | | |
| .000 | -.3441 | -.2249 |
| 40.000 | -.2174 | -.1440 |

ALPHA ( 4) = 7.901 BETA ( 1) = -7.896 MACH = .59758 Q = 596.20 P = 2385.1 RN/L = 4.8692

SECTION ( 1)BODY FLAP LOWER DEPENDENT VARIABLE CP

| X/LB | 1.0180 | 1.0460 |
|---|---|---|
| PHI | | |
| .000 | -.3522 | -.2361 |
| 40.000 | -.2671 | -.2093 |

ALPHA ( 4) = 7.913 BETA ( 2) = -3.861 MACH = .59758 Q = 596.20 P = 2385.1 RN/L = 4.8692

SECTION ( 1)BODY FLAP LOWER DEPENDENT VARIABLE CP

| X/LB | 1.0180 | 1.0460 |
|---|---|---|
| PHI | | |
| .000 | -.3399 | -.2142 |
| 40.000 | -.2452 | -.1827 |

ALPHA ( 4) = 8.049 BETA ( 3) = .175 MACH = .59758 Q = 596.20 P = 2385.1 RN/L = 4.8692

SECTION ( 1)BODY FLAP LOWER DEPENDENT VARIABLE CP

| X/LB | 1.0180 | 1.0460 |
|---|---|---|
| PHI | | |
| .000 | -.3509 | -.2165 |
| 40.000 | -.2578 | -.1677 |

ALPHA ( 4) = 8.049 BETA ( 4) = 4.238 MACH = .59758 Q = 596.20 P = 2385.1 RN/L = 4.8692

SECTION ( 1)BODY FLAP LOWER DEPENDENT VARIABLE CP

| X/LB | 1.0180 | 1.0460 |
|---|---|---|
| PHI | | |
| .000 | -.3465 | -.2185 |
| 40.000 | -.2347 | -.1495 |

AMES 11-073(OA148) -140A/B/C/R ORB BODY FLAP LWR (XE8G22)

ALPHA ( 4) = 8.046 BETA ( 5) = 8.297 MACH = .59758 Q = 596.20 P = 2385.1 RN/L = 4.8692

SECTION ( 1)BODY FLAP LOWER DEPENDENT VARIABLE CP

| X/LB | 1.0180 | 1.0460 |
|---|---|---|
| PHI | | |
| .000 | -.3474 | -.2294 |
| 40.000 | -.2036 | -.1356 |

ALPHA ( 5) = 11.963 BETA ( 1) = -7.860 MACH = .59774 Q = 596.43 P = 2384.9 RN/L = 4.8734

SECTION ( 1)BODY FLAP LOWER DEPENDENT VARIABLE CP

| X/LB | 1.0180 | 1.0460 |
|---|---|---|
| PHI | | |
| .000 | -.3452 | -.2193 |
| 40.000 | -.2481 | -.1911 |

ALPHA ( 5) = 11.985 BETA ( 2) = -3.840 MACH = .59774 Q = 596.43 P = 2384.9 RN/L = 4.8734

SECTION ( 1)BODY FLAP LOWER DEPENDENT VARIABLE CP

| X/LB | 1.0180 | 1.0460 |
|---|---|---|
| PHI | | |
| .000 | -.3254 | -.2047 |
| 40.000 | -.2376 | -.1567 |

ALPHA ( 5) = 12.000 BETA ( 3) = .181 MACH = .59774 Q = 596.43 P = 2384.9 RN/L = 4.8734

SECTION ( 1)BODY FLAP LOWER DEPENDENT VARIABLE CP

| X/LB | 1.0180 | 1.0460 |
|---|---|---|
| PHI | | |
| .000 | -.3383 | -.2112 |
| 40.000 | -.2363 | -.1442 |

ALPHA ( 5) = 12.027 BETA ( 4) = 4.252 MACH = .59774 Q = 596.43 P = 2384.9 RN/L = 4.8734

SECTION ( 1)BODY FLAP LOWER DEPENDENT VARIABLE CP

| X/LB | 1.0180 | 1.0460 |
|---|---|---|
| PHI | | |
| .000 | -.3403 | -.2119 |
| 40.000 | -.2183 | -.1349 |

AMES 11-073(OA148) -140A/B/C/R ORB BODY FLAP LWR (XEBG22)

ALPHA ( 5) = 12.070 BETA ( 5) = 8.324 MACH = .59774 Q = 596.43 P = 2384.9 RN/L = 4.8734

SECTION ( 1)BODY FLAP LOWER DEPENDENT VARIABLE CP

| X/LB | 1.0180 | 1.0460 |
|---|---|---|
| PHI | | |
| .000 | -.3359 | -.2116 |
| 40.000 | -.1867 | -.1229 |

ORIGINAL PAGE IS
OF POOR QUALITY

AMES 11-073(OA148) -140A/B/C/R ORB BODY FLAP LWR (XE8G23) ( 05 AUG 75 )

REFERENCE DATA

SREF = 2690.0000 SQ.FT. XMRP = 1076.6800 IN. XO
LREF = 474.8000 IN. YMRP = .0000 IN. YO
BREF = 936.0680 IN. ZMRP = 375.0000 IN. ZO
SCALE = .0300

PARAMETRIC DATA

RUDDER = .000 SPDBRK = .000
BDFLAP = .000 L-ELVN = .000
R-ELVN = .000 MACH = 1.400

ALPHA ( 1) = -3.999 BETA ( 1) = -3.856 MACH = 1.3924 Q = 598.36 P = 440.89 RN/L = 2.9021

SECTION ( 1)BODY FLAP LOWER DEPENDENT VARIABLE CP

| X/LB | 1.0180 | 1.0460 |
|---|---|---|
| PHI | | |
| .000 | -.2640 | -.2633 |
| 40.000 | -.2900 | -.2559 |

ALPHA ( 1) = -3.926 BETA ( 2) = .190 MACH = 1.3924 Q = 598.36 P = 440.89 RN/L = 2.9021

SECTION ( 1)BODY FLAP LOWER DEPENDENT VARIABLE CP

| X/LB | 1.0180 | 1.0460 |
|---|---|---|
| PHI | | |
| .000 | -.2587 | -.2676 |
| 40.000 | -.2657 | -.2396 |

ALPHA ( 1) = -3.985 BETA ( 3) = 4.279 MACH = 1.3924 Q = 598.36 P = 440.89 RN/L = 2.9021

SECTION ( 1)BODY FLAP LOWER DEPENDENT VARIABLE CP

| X/LB | 1.0180 | 1.0460 |
|---|---|---|
| PHI | | |
| .000 | -.2610 | -.2639 |
| 40.000 | -.2558 | -.2342 |

ALPHA ( 2) = .006 BETA ( 1) = -3.877 MACH = 1.3947 Q = 599.32 P = 440.18 RN/L = 2.9066

SECTION ( 1)BODY FLAP LOWER DEPENDENT VARIABLE CP

| X/LB | 1.0180 | 1.0460 |
|---|---|---|
| PHI | | |
| .000 | -.2067 | -.2074 |
| 40.000 | -.2345 | -.2069 |

AMES 11-073(OA148) -140A/B/C/R ORB BODY FLAP LWR (XE8G23)

ALPHA ( 2) = .011 BETA ( 2) = .183 MACH = 1.3947 Q = 599.32 P = 440.18 RN/L = 2.9066

SECTION ( 1)BODY FLAP LOWER DEPENDENT VARIABLE CP

| X/LB | 1.0180 | 1.0460 |
|---|---|---|
| PHI | | |
| .000 | -.1997 | -.2121 |
| 40.000 | -.2281 | -.2083 |

ALPHA ( 2) = .023 BETA ( 3) = 4.256 MACH = 1.3947 Q = 599.32 P = 440.18 RN/L = 2.9066

SECTION ( 1)BODY FLAP LOWER DEPENDENT VARIABLE CP

| X/LB | 1.0180 | 1.0460 |
|---|---|---|
| PHI | | |
| .000 | -.1994 | -.2096 |
| 40.000 | -.2096 | -.2042 |

ALPHA ( 3) = 3.926 BETA ( 1) = -3.879 MACH = 1.3946 Q = 599.62 P = 440.42 RN/L = 2.9033

SECTION ( 1)BODY FLAP LOWER DEPENDENT VARIABLE CP

| X/LB | 1.0180 | 1.0460 |
|---|---|---|
| PHI | | |
| .000 | -.1506 | -.1563 |
| 40.000 | -.1680 | -.1501 |

ALPHA ( 3) = 3.958 BETA ( 2) = .183 MACH = 1.3946 Q = 599.62 P = 440.42 RN/L = 2.9033

SECTION ( 1)BODY FLAP LOWER DEPENDENT VARIABLE CP

| X/LB | 1.0180 | 1.0460 |
|---|---|---|
| PHI | | |
| .000 | -.1501 | -.1582 |
| 40.000 | -.1634 | -.1662 |

ALPHA ( 3) = 3.971 BETA ( 3) = 4.247 MACH = 1.3946 Q = 599.62 P = 440.42 RN/L = 2.9033

SECTION ( 1)BODY FLAP LOWER DEPENDENT VARIABLE CP

| X/LB | 1.0180 | 1.0460 |
|---|---|---|
| PHI | | |
| .000 | -.1498 | -.1607 |
| 40.000 | -.1629 | -.1793 |

AMES 11-073(OA148) -140A/B/C/R ORB BODY FLAP LWR (XE8G23)

ALPHA ( 4) = 7.933 BETA ( 1) = -3.869 MACH = 1.3941 Q = 599.51 P = 440.65 RN/L = 2.9093

SECTION ( 1)BODY FLAP LOWER DEPENDENT VARIABLE CP

| X/LB | 1.0180 | 1.0460 |
|---|---|---|
| PHI | | |
| .000 | -.1012 | -.1143 |
| 40.000 | -.1090 | -.1259 |

ALPHA ( 4) = 7.908 BETA ( 2) = .178 MACH = 1.3941 Q = 599.51 P = 440.65 RN/L = 2.9093

SECTION ( 1)BODY FLAP LOWER DEPENDENT VARIABLE CP

| X/LB | 1.0180 | 1.0460 |
|---|---|---|
| PHI | | |
| .000 | -.0939 | -.1097 |
| 40.000 | -.1202 | -.1402 |

ALPHA ( 4) = 7.872 BETA ( 3) = 4.245 MACH = 1.3941 Q = 599.51 P = 440.65 RN/L = 2.9093

SECTION ( 1)BODY FLAP LOWER DEPENDENT VARIABLE CP

| X/LB | 1.0180 | 1.0460 |
|---|---|---|
| PHI | | |
| .000 | -.1047 | -.1109 |
| 40.000 | -.1320 | -.1542 |

ALPHA ( 5) = 11.931 BETA ( 1) = -3.857 MACH = 1.3942 Q = 599.92 P = 440.89 RN/L = 2.9149

SECTION ( 1)BODY FLAP LOWER DEPENDENT VARIABLE CP

| X/LB | 1.0180 | 1.0460 |
|---|---|---|
| PHI | | |
| .000 | -.0520 | -.0748 |
| 40.000 | -.0924 | -.1219 |

ALPHA ( 5) = 11.869 BETA ( 2) = .183 MACH = 1.3942 Q = 599.92 P = 440.89 RN/L = 2.9149

SECTION ( 1)BODY FLAP LOWER DEPENDENT VARIABLE CP

| X/LB | 1.0180 | 1.0460 |
|---|---|---|
| PHI | | |
| .000 | -.0483 | -.0714 |
| 40.000 | -.0869 | -.1330 |

AMES 11-073(OA148) -140A/B/C/R ORB BODY FLAP LWR (XEBG23)

ALPHA ( 5) = 11.865 BETA ( 3) = 4.258 MACH = 1.3942 Q = 599.92 P = 440.89 RN/L = 2.9149

SECTION ( 1)BODY FLAP LOWER DEPENDENT VARIABLE CP

| X/LB | 1.0180 | 1.0460 |
|---|---|---|
| PHI | | |
| .000 | -.0568 | -.0787 |
| 40.000 | -.1029 | -.1243 |

ALPHA ( 6) = 15.857 BETA ( 1) = -3.836 MACH = 1.3942 Q = 599.51 P = 440.65 RN/L = 2.9096

SECTION ( 1)BODY FLAP LOWER DEPENDENT VARIABLE CP

| X/LB | 1.0180 | 1.0460 |
|---|---|---|
| PHI | | |
| .000 | -.0052 | -.0262 |
| 40.000 | -.0654 | -.1151 |

ALPHA ( 6) = 15.871 BETA ( 2) = .184 MACH = 1.3942 Q = 599.51 P = 440.65 RN/L = 2.9096

SECTION ( 1)BODY FLAP LOWER DEPENDENT VARIABLE CP

| X/LB | 1.0180 | 1.0460 |
|---|---|---|
| PHI | | |
| .000 | -.0004 | -.0275 |
| 40.000 | -.0589 | -.0974 |

ALPHA ( 6) = 15.861 BETA ( 3) = 4.289 MACH = 1.3942 Q = 599.51 P = 440.65 RN/L = 2.9096

SECTION ( 1)BODY FLAP LOWER DEPENDENT VARIABLE CP

| X/LB | 1.0180 | 1.0460 |
|---|---|---|
| PHI | | |
| .000 | .0010 | -.0221 |
| 40.000 | -.0523 | -.0864 |

AMES 11-073(OA148) -140A/B/C/R ORB BODY FLAP LWR (XE8G24) ( 05 AUG 75 )

REFERENCE DATA

SREF = 2690.0000 SQ.FT. XMRP = 1076.6800 IN. XO
LREF = 474.8000 IN. YMRP = .0000 IN. YO
BREF = 936.0680 IN. ZMRP = 375.0000 IN. ZO
SCALE = .0300

PARAMETRIC DATA

RUDDER = .000 SPOBRK = .000
BDFLAP = .000 L-ELVN = .000
R-ELVN = .000 MACH = 1.250

ALPHA (A) = -3.982 BETA ( 1) = -3.844 MACH = 1.2469 Q = 599.78 P = 551.11 RN/L = 3.0086

SECTION ( 1)BODY FLAP LOWER DEPENDENT VARIABLE CP

| X/LB | 1.0180 | 1.0460 |
|---|---|---|
| PHI | | |
| .000 | -.3255 | -.3236 |
| 40.000 | -.3388 | -.2746 |

ALPHA ( 1) = -3.977 BETA ( 2) = .190 MACH = 1.2469 Q = 599.78 P = 551.11 RN/L = 3.0086

SECTION ( 1)BODY FLAP LOWER DEPENDENT VARIABLE CP

| X/LB | 1.0180 | 1.0460 |
|---|---|---|
| PHI | | |
| .000 | -.3302 | -.3352 |
| 40.000 | -.3254 | -.2646 |

ALPHA ( 1) = -3.980 BETA ( 3) = 4.277 MACH = 1.2469 Q = 599.78 P = 551.11 RN/L = 3.0086

SECTION ( 1)BODY FLAP LOWER DEPENDENT VARIABLE CP

| X/LB | 1.0180 | 1.0460 |
|---|---|---|
| PHI | | |
| .000 | -.3248 | -.3196 |
| 40.000 | -.3113 | -.2735 |

ALPHA ( 2) = .039 BETA ( 1) = -3.875 MACH = 1.2468 Q = 599.96 P = 551.34 RN/L = 3.0225

SECTION ( 1)BODY FLAP LOWER DEPENDENT VARIABLE CP

| X/LB | 1.0180 | 1.0460 |
|---|---|---|
| PHI | | |
| .000 | -.2612 | -.2612 |
| 40.000 | -.2561 | -.2236 |

AMES 11-073(OA148) -140A/B/C/R ORB BODY FLAP LWR (XEBG24)

ALPHA ( 2) = .042 BETA ( 2) = .180 MACH = 1.2468 Q = 599.96 P = 551.34 RN/L = 3.0225

SECTION ( 1)BODY FLAP LOWER DEPENDENT VARIABLE CP

| X/LB | 1.0180 | 1.0460 |
|---|---|---|
| PHI | | |
| .000 | -.2570 | -.2696 |
| 40.000 | -.2750 | -.2309 |

ALPHA ( 2) = .044 BETA ( 3) = 4.251 MACH = 1.2468 Q = 599.96 P = 551.34 RN/L = 3.0225

SECTION ( 1)BODY FLAP LOWER DEPENDENT VARIABLE CP

| X/LB | 1.0180 | 1.0460 |
|---|---|---|
| PHI | | |
| .000 | -.2630 | -.2649 |
| 40.000 | -.2644 | -.2416 |

ALPHA ( 3) = 3.904 BETA ( 1) = -3.872 MACH = 1.2475 Q = 600.37 P = 551.11 RN/L = 3.0117

SECTION ( 1)BODY FLAP LOWER DEPENDENT VARIABLE CP

| X/LB | 1.0180 | 1.0460 |
|---|---|---|
| PHI | | |
| .000 | -.2070 | -.2153 |
| 40.000 | -.1987 | -.1752 |

ALPHA ( 3) = 3.905 BETA ( 2) = .182 MACH = 1.2475 Q = 600.37 P = 551.11 RN/L = 3.0117

SECTION ( 1)BODY FLAP LOWER DEPENDENT VARIABLE CP

| X/LB | 1.0180 | 1.0460 |
|---|---|---|
| PHI | | |
| .000 | -.2029 | -.2143 |
| 40.000 | -.2152 | -.1974 |

ALPHA ( 3) = 3.915 BETA ( 3) = 4.245 MACH = 1.2475 Q = 600.37 P = 551.11 RN/L = 3.0117

SECTION ( 1)BODY FLAP LOWER DEPENDENT VARIABLE CP

| X/LB | 1.0180 | 1.0460 |
|---|---|---|
| PHI | | |
| .000 | -.2049 | -.2158 |
| 40.000 | -.2149 | -.2115 |

AMES 11-073(OA148) -140A/B/C/R ORB BODY FLAP LWR (XEBG24)

ALPHA ( 4) = 7.877 BETA ( 1) = -3.867 MACH = 1.2474 Q = 600.25 P = 551.11 RN/L = 3.0132

SECTION ( 1)BODY FLAP LOWER DEPENDENT VARIABLE CP

| X/LB | 1.0180 | 1.0460 |
|---|---|---|
| PHI | | |
| .000 | -.1623 | -.1778 |
| 40.000 | -.1599 | -.1626 |

ALPHA ( 4) = 7.882 BETA ( 2) = .178 MACH = 1.2474 Q = 600.25 P = 551.11 RN/L = 3.0132

SECTION ( 1)BODY FLAP LOWER DEPENDENT VARIABLE CP

| X/LB | 1.0180 | 1.0460 |
|---|---|---|
| PHI | | |
| .000 | -.1603 | -.1776 |
| 40.000 | -.1686 | -.1817 |

ALPHA ( 4) = 7.882 BETA ( 3) = 4.244 MACH = 1.2474 Q = 600.25 P = 551.11 RN/L = 3.0132

SECTION ( 1)BODY FLAP LOWER DEPENDENT VARIABLE CP

| X/LB | 1.0180 | 1.0460 |
|---|---|---|
| PHI | | |
| .000 | -.1568 | -.1751 |
| 40.000 | -.1827 | -.1995 |

ALPHA ( 5) = 11.916 BETA ( 1) = -3.850 MACH = 1.2463 Q = 600.28 P = 552.05 RN/L = 3.0160

SECTION ( 1)BODY FLAP LOWER DEPENDENT VARIABLE CP

| X/LB | 1.0180 | 1.0460 |
|---|---|---|
| PHI | | |
| .000 | -.1256 | -.1437 |
| 40.000 | -.1404 | -.1613 |

ALPHA ( 5) = 11.928 BETA ( 2) = .186 MACH = 1.2463 Q = 600.28 P = 552.05 RN/L = 3.0160

SECTION ( 1)BODY FLAP LOWER DEPENDENT VARIABLE CP

| X/LB | 1.0180 | 1.0460 |
|---|---|---|
| PHI | | |
| .000 | -.1185 | -.1392 |
| 40.000 | -.1456 | -.1681 |

AMES 11-073(OA148) -140A/B/C/R ORB BODY FLAP LWR (XE8G24)

ALPHA ( 5) = 11.922 BETA ( 3) = 4.256 MACH = 1.2463 Q = 600.28 P = 552.05 RN/L = 3.0160

SECTION ( 1)BODY FLAP LOWER DEPENDENT VARIABLE CP

| X/LB | 1.0180 | 1.0460 |
|---|---|---|
| PHI | | |
| .000 | -.1185 | -.1494 |
| 40.000 | -.1496 | -.1907 |

ORIGINAL PAGE IS
OF POOR QUALITY

AMES 11-073(OA148) -140A/B/C/R ORB BODY FLAP LWR (XEBG25) ( 05 AUG 75 )

REFERENCE DATA

SREF = 2690.0000 SQ.FT. XMRP = 1076.6800 IN. XO
LREF = 474.8000 IN. YMRP = .0000 IN. YO
BREF = 936.0680 IN. ZMRP = 375.0000 IN. ZO
SCALE = .0300

PARAMETRIC DATA

RUDDER = .000 SPDBRK = .000
BDFLAP = .000 L-ELVN = .000
R-ELVN = .000 MACH = 1.100

ALPHA ( 1) = -3.988 BETA ( 1) = -3.842 MACH = 1.0978 Q = 600.10 P = 711.43 RN/L = 3.1881

SECTION ( 1)BODY FLAP LOWER DEPENDENT VARIABLE CP

| X/LB | 1.0180 | 1.0460 |
|---|---|---|
| PHI | | |
| .000 | -.4211 | -.3317 |
| 40.000 | -.2997 | -.2918 |

ALPHA ( 1) = -3.982 BETA ( 2) = .191 MACH = 1.0978 Q = 600.10 P = 711.43 RN/L = 3.1881

SECTION ( 1)BODY FLAP LOWER DEPENDENT VARIABLE CP

| X/LB | 1.0180 | 1.0460 |
|---|---|---|
| PHI | | |
| .000 | -.3934 | -.3695 |
| 40.000 | -.3045 | -.2586 |

ALPHA ( 1) = -3.987 BETA ( 3) = 4.273 MACH = 1.0978 Q = 600.10 P = 711.43 RN/L = 3.1881

SECTION ( 1)BODY FLAP LOWER DEPENDENT VARIABLE CP

| X/LB | 1.0180 | 1.0460 |
|---|---|---|
| PHI | | |
| .000 | -.3925 | -.3137 |
| 40.000 | -.3595 | -.3042 |

ALPHA ( 2) = .056 BETA ( 1) = -3.867 MACH = 1.0980 Q = 599.15 P = 710.01 RN/L = 3.1813

SECTION ( 1)BODY FLAP LOWER DEPENDENT VARIABLE CP

| X/LB | 1.0180 | 1.0460 |
|---|---|---|
| PHI | | |
| .000 | -.3547 | -.2884 |
| 40.000 | -.2520 | -.2245 |

AMES 11-073(OA148) -140A/B/C/R ORB BODY FLAP LWR (XE8G25)

ALPHA ( 2) = .058 BETA ( 2) = .181 MACH = 1.0980 Q = 599.15 P = 710.01 RN/L = 3.1813

SECTION ( 1)BODY FLAP LOWER DEPENDENT VARIABLE CP

| X/LB | 1.0180 | 1.0460 |
|---|---|---|
| PHI | | |
| .000 | -.3457 | -.3094 |
| 40.000 | -.2718 | -.2424 |

ALPHA ( 2) = .056 BETA ( 3) = 4.249 MACH = 1.0980 Q = 599.15 P = 710.01 RN/L = 3.1813

SECTION ( 1)BODY FLAP LOWER DEPENDENT VARIABLE CP

| X/LB | 1.0180 | 1.0460 |
|---|---|---|
| PHI | | |
| .000 | -.3379 | -.2759 |
| 40.000 | -.3078 | -.2655 |

ALPHA ( 3) = 3.948 BETA ( 1) = -3.871 MACH = 1.0978 Q = 599.38 P = 710.48 RN/L = 3.1840

SECTION ( 1)BODY FLAP LOWER DEPENDENT VARIABLE CP

| X/LB | 1.0180 | 1.0460 |
|---|---|---|
| PHI | | |
| .000 | -.3215 | -.2759 |
| 40.000 | -.2473 | -.2232 |

ALPHA ( 3) = 3.949 BETA ( 2) = .177 MACH = 1.0978 Q = 599.38 P = 710.48 RN/L = 3.1840

SECTION ( 1)BODY FLAP LOWER DEPENDENT VARIABLE CP

| X/LB | 1.0180 | 1.0460 |
|---|---|---|
| PHI | | |
| .000 | -.3058 | -.2695 |
| 40.000 | -.2412 | -.2186 |

ALPHA ( 3) = 3.950 BETA ( 3) = 4.239 MACH = 1.0978 Q = 599.38 P = 710.48 RN/L = 3.1840

SECTION ( 1)BODY FLAP LOWER DEPENDENT VARIABLE CP

| X/LB | 1.0180 | 1.0460 |
|---|---|---|
| PHI | | |
| .000 | -.3149 | -.2592 |
| 40.000 | -.2689 | -.2428 |

AMES 11-073(OA148) -140A/B/C/R ORB BODY FLAP LWR (XE8G25)

ALPHA ( 4) = 7.932 BETA ( 1) = -3.857 MACH = 1.0986 Q = 599.84 P = 710.01 RN/L = 3.1812

SECTION ( 1)BODY FLAP LOWER DEPENDENT VARIABLE CP

| X/LB | 1.0180 | 1.0460 |
|---|---|---|
| PHI | | |
| .000 | -.2724 | -.2503 |
| 40.000 | -.2273 | -.2090 |

ALPHA ( 4) = 7.938 BETA ( 2) = .185 MACH = 1.0985 Q = 599.84 P = 710.01 RN/L = 3.1812

SECTION ( 1)BODY FLAP LOWER DEPENDENT VARIABLE CP

| X/LB | 1.0180 | 1.0460 |
|---|---|---|
| PHI | | |
| .000 | -.2592 | -.2449 |
| 40.000 | -.2157 | -.2062 |

ALPHA ( 4) = 7.937 BETA ( 3) = 4.238 MACH = 1.0986 Q = 599.84 P = 710.01 RN/L = 3.1812

SECTION ( 1)BODY FLAP LOWER DEPENDENT VARIABLE CP

| X/LB | 1.0180 | 1.0460 |
|---|---|---|
| PHI | | |
| .000 | -.2736 | -.2474 |
| 40.000 | -.2427 | -.2360 |

ALPHA ( 5) = 11.970 BETA ( 1) = -3.845 MACH = 1.0981 Q = 599.46 P = 710.25 RN/L = 3.1817

SECTION ( 1)BODY FLAP LOWER DEPENDENT VARIABLE CP

| X/LB | 1.0180 | 1.0460 |
|---|---|---|
| PHI | | |
| .000 | -.2155 | -.2059 |
| 40.000 | -.1788 | -.1908 |

ALPHA ( 5) = 11.981 BETA ( 2) = .187 MACH = 1.0981 Q = 599.46 P = 710.25 RN/L = 3.1817

SECTION ( 1)BODY FLAP LOWER DEPENDENT VARIABLE CP

| X/LB | 1.0180 | 1.0460 |
|---|---|---|
| PHI | | |
| .000 | -.2171 | -.2266 |
| 40.000 | -.1884 | -.1907 |

AMES 11-073(OA148) -140A/B/C/R ORB BODY FLAP LWR (XEBG25)

ALPHA ( 5) = 11.975 BETA ( 3) = 4.250 MACH = 1.0981 Q = 599.46 P = 710.25 RN/L = 3.1817

SECTION ( 1)BODY FLAP LOWER DEPENDENT VARIABLE CP

| X/LB | 1.0180 | 1.0460 |
|---|---|---|
| PHI | | |
| .000 | -.2402 | -.2283 |
| 40.000 | -.2397 | -.2383 |

ORIGINAL PAGE IS
OF POOR QUALITY

AMES 11-073(OA148) -140A/B/C/R ORB BODY FLAP LWR (XEBG26) ( 05 AUG 75 )

REFERENCE DATA

SREF = 2690.0000 SQ.FT. XMRP = 1076.6800 IN. XO
LREF = 474.8000 IN. YMRP = .0000 IN. YO
BREF = 936.0680 IN. ZMRP = 375.0000 IN. ZO
SCALE = .0300

PARAMETRIC DATA

RUDDER = .000 SPDBRK = .000
BDFLAP = .000 L-ELVN = .000
R-ELVN = .000 MACH = .900

ALPHA ( 1) = -3.986 BETA ( 1) = -3.845 MACH = .89940 Q = 599.79 P = 1059.2 RN/L = 3.5659

SECTION ( 1)BODY FLAP LOWER DEPENDENT VARIABLE CP

| X/LB | 1.0180 | 1.0460 |
|---|---|---|
| PHI | | |
| .000 | -.0769 | -.1466 |
| 40.000 | -.1406 | -.1487 |

ALPHA ( 1) = -3.977 BETA ( 2) = .190 MACH = .89940 Q = 599.79 P = 1059.2 RN/L = 3.5659

SECTION ( 1)BODY FLAP LOWER DEPENDENT VARIABLE CP

| X/LB | 1.0180 | 1.0460 |
|---|---|---|
| PHI | | |
| .000 | -.0750 | -.1469 |
| 40.000 | -.1269 | -.1569 |

ALPHA ( 1) = -3.985 BETA ( 3) = 4.276 MACH = .89940 Q = 599.79 P = 1059.2 RN/L = 3.5659

SECTION ( 1)BODY FLAP LOWER DEPENDENT VARIABLE CP

| X/LB | 1.0180 | 1.0460 |
|---|---|---|
| PHI | | |
| .000 | -.0770 | -.1475 |
| 40.000 | -.0941 | -.1430 |

ALPHA ( 2) = .061 BETA ( 1) = -3.869 MACH = .89877 Q = 599.18 P = 1059.7 RN/L = 3.5651

SECTION ( 1)BODY FLAP LOWER DEPENDENT VARIABLE CP

| X/LB | 1.0180 | 1.0460 |
|---|---|---|
| PHI | | |
| .000 | -.0803 | -.1501 |
| 40.000 | -.1382 | -.1559 |

AMES 11-073(OA148) -140A/B/C/R ORB BODY FLAP LWR (XE8G26)

ALPHA ( 2) = .067 BETA ( 2) = .174 MACH = .89877 Q = 599.18 P = 1059.7 RN/L = 3.5651

SECTION ( 1)BODY FLAP LOWER DEPENDENT VARIABLE CP

| X/LB | 1.0180 | 1.0460 |
|---|---|---|
| PHI | | |
| .000 | -.0677 | -.1392 |
| 40.000 | -.1112 | -.1352 |

ALPHA ( 2) = .063 BETA ( 3) = 4.252 MACH = .89877 Q = 599.18 P = 1059.7 RN/L = 3.5651

SECTION ( 1)BODY FLAP LOWER DEPENDENT VARIABLE CP

| X/LB | 1.0180 | 1.0460 |
|---|---|---|
| PHI | | |
| .000 | -.0754 | -.1422 |
| 40.000 | -.0973 | -.1441 |

ALPHA ( 3) = 3.954 BETA ( 1) = -3.877 MACH = .89787 Q = 598.42 P = 1060.5 RN/L = 3.5652

SECTION ( 1)BODY FLAP LOWER DEPENDENT VARIABLE CP

| X/LB | 1.0180 | 1.0460 |
|---|---|---|
| PHI | | |
| .000 | -.0651 | -.1382 |
| 40.000 | -.1397 | -.1454 |

ALPHA ( 3) = 3.955 BETA ( 2) = .186 MACH = .89787 Q = 598.42 P = 1060.5 RN/L = 3.5652

SECTION ( 1)BODY FLAP LOWER DEPENDENT VARIABLE CP

| X/LB | 1.0180 | 1.0460 |
|---|---|---|
| PHI | | |
| .000 | -.0626 | -.1280 |
| 40.000 | -.1071 | -.1276 |

ALPHA ( 3) = 3.963 BETA ( 3) = 4.243 MACH = .89787 Q = 598.42 P = 1060.5 RN/L = 3.5652

SECTION ( 1)BODY FLAP LOWER DEPENDENT VARIABLE CP

| X/LB | 1.0180 | 1.0460 |
|---|---|---|
| PHI | | |
| .000 | -.0628 | -.1326 |
| 40.000 | -.0883 | -.1348 |

AMES 11-073(OA148) -140A/B/C/R ORB BODY FLAP LWR (XE8G26)

ALPHA ( 4) = 7.926 BETA ( 1) = -3.870 MACH = .89930 Q = 600.20 P = 1060.2 RN/L = 3.5747

SECTION ( 1)BODY FLAP LOWER DEPENDENT VARIABLE CP

| X/LB | 1.0180 | 1.0460 |
|---|---|---|
| PHI | | |
| .000 | -.0465 | -.1213 |
| 40.000 | -.1136 | -.1267 |

ALPHA ( 4) = 7.938 BETA ( 2) = .179 MACH = .89930 Q = 600.20 P = 1060.2 RN/L = 3.5747

SECTION ( 1)BODY FLAP LOWER DEPENDENT VARIABLE CP

| X/LB | 1.0180 | 1.0460 |
|---|---|---|
| PHI | | |
| .000 | -.0420 | -.1217 |
| 40.000 | -.0980 | -.1198 |

ALPHA ( 4) = 7.933 BETA ( 3) = 4.243 MACH = .89930 Q = 600.20 P = 1060.2 RN/L = 3.5747

SECTION ( 1)BODY FLAP LOWER DEPENDENT VARIABLE CP

| X/LB | 1.0180 | 1.0460 |
|---|---|---|
| PHI | | |
| .000 | -.0492 | -.1261 |
| 40.000 | -.0873 | -.1263 |

ALPHA ( 5) = 11.953 BETA ( 1) = -3.854 MACH = .89857 Q = 599.22 P = 1060.2 RN/L = 3.5673

SECTION ( 1)BODY FLAP LOWER DEPENDENT VARIABLE CP

| X/LB | 1.0180 | 1.0460 |
|---|---|---|
| PHI | | |
| .000 | -.0405 | -.1200 |
| 40.000 | -.1161 | -.1193 |

ALPHA ( 5) = 11.965 BETA ( 2) = .129 MACH = .89857 Q = 599.22 P = 1060.2 RN/L = 3.5673

SECTION ( 1)BODY FLAP LOWER DEPENDENT VARIABLE CP

| X/LB | 1.0180 | 1.0460 |
|---|---|---|
| PHI | | |
| .000 | -.0527 | -.1195 |
| 40.000 | -.0975 | -.1268 |

AMES 11-073(OA148) -140A/B/C/R DRB BODY FLAP LWR (XE8G26)

ALPHA ( 5) = 11.949 BETA ( 3) = 4.257 MACH = .89857 Q = 599.22 P = 1060.2 RN/L = 3.5673

SECTION ( 1)BODY FLAP LOWER DEPENDENT VARIABLE CP

| X/LB | 1.0180 | 1.0460 |
|---|---|---|
| PHI | | |
| .000 | -.0341 | -.1218 |
| 40.000 | -.0619 | -.1292 |

AMES 11-073(OA148) -140A/B/C/R ORB BODY FLAP LWR (XE8G27) ( 05 AUG 75 )

REFERENCE DATA

SREF = 2690.0000 SQ.FT. XMRP = 1076.6800 IN. XO
LREF = 474.8000 IN. YMRP = .0000 IN. YO
BREF = 936.0680 IN. ZMRP = 375.0000 IN. ZO
SCALE = .0300

PARAMETRIC DATA

RUDDER = .000 SPDBRK = .000
BDFLAP = .000 L-ELVN = .000
R-ELVN = .000 MACH = .600

ALPHA ( 1) = -3.996 BETA ( 1) = -7.853 MACH = .59658 Q = 594.56 P = 2386.3 RN/L = 4.8484

SECTION ( 1)BODY FLAP LOWER DEPENDENT VARIABLE CP

| X/LB | 1.0180 | 1.0460 |
|---|---|---|
| PHI | | |
| .000 | -.1205 | -.1748 |
| 40.000 | -.1129 | -.1447 |

ALPHA ( 1) = -3.969 BETA ( 2) = -3.841 MACH = .59658 Q = 594.56 P = 2386.3 RN/L = 4.8484

SECTION ( 1)BODY FLAP LOWER DEPENDENT VARIABLE CP

| X/LB | 1.0180 | 1.0460 |
|---|---|---|
| PHI | | |
| .000 | -.1139 | -.1661 |
| 40.000 | -.1144 | -.1351 |

ALPHA ( 1) = -3.949 BETA ( 3) = .187 MACH = .59658 Q = 594.56 P = 2386.3 RN/L = 4.8484

SECTION ( 1)BODY FLAP LOWER DEPENDENT VARIABLE CP

| X/LB | 1.0180 | 1.0460 |
|---|---|---|
| PHI | | |
| .000 | -.1115 | -.1549 |
| 40.000 | -.1348 | -.1537 |

ALPHA ( 1) = -3.957 BETA ( 4) = 4.268 MACH = .59658 Q = 594.56 P = 2386.3 RN/L = 4.8484

SECTION ( 1)BODY FLAP LOWER DEPENDENT VARIABLE CP

| X/LB | 1.0180 | 1.0460 |
|---|---|---|
| PHI | | |
| .000 | -.1174 | -.1634 |
| 40.000 | -.1172 | -.1527 |

AMES 11-073(OA148) -140A/B/C/R ORB BODY FLAP LWR (XE8G27)

ALPHA ( 1) = -3.972 BETA ( 5) = 8.340 MACH = .59658 Q = 594.56 P = 2386.3 RN/L = 4.8484

SECTION ( 1)BODY FLAP LOWER DEPENDENT VARIABLE CP

| X/LB | 1.0180 | 1.0460 |
|---|---|---|
| PHI | | |
| .000 | -.1169 | -.1620 |
| 40.000 | -.1146 | -.1501 |

ALPHA ( 2) = .056 BETA ( 1) = -7.886 MACH = .59638 Q = 594.21 P = 2386.5 RN/L = 4.8456

SECTION ( 1)BODY FLAP LOWER DEPENDENT VARIABLE CP

| X/LB | 1.0180 | 1.0460 |
|---|---|---|
| PHI | | |
| .000 | -.1092 | -.1695 |
| 40.000 | -.1054 | -.1266 |

ALPHA ( 2) = .065 BETA ( 2) = -3.860 MACH = .59638 Q = 594.21 P = 2386.5 RN/L = 4.8456

SECTION ( 1)BODY FLAP LOWER DEPENDENT VARIABLE CP

| X/LB | 1.0180 | 1.0460 |
|---|---|---|
| PHI | | |
| .000 | -.1083 | -.1630 |
| 40.000 | -.1104 | -.1297 |

ALPHA ( 2) = .070 BETA ( 3) = .184 MACH = .59638 Q = 594.21 P = 2386.5 RN/L = 4.8456

SECTION ( 1)BODY FLAP LOWER DEPENDENT VARIABLE CP

| X/LB | 1.0180 | 1.0460 |
|---|---|---|
| PHI | | |
| .000 | -.1101 | -.1576 |
| 40.000 | -.1213 | -.1405 |

ALPHA ( 2) = .066 BETA ( 4) = 4.247 MACH = .59638 Q = 594.21 P = 2386.5 RN/L = 4.8456

SECTION ( 1)BODY FLAP LOWER DEPENDENT VARIABLE CP

| X/LB | 1.0180 | 1.0460 |
|---|---|---|
| PHI | | |
| .000 | -.1056 | -.1616 |
| 40.000 | -.1158 | -.1464 |

AMES 11-073(OA148) -140A/B/C/R ORB BODY FLAP LWR (XEBG27)

ALPHA ( 2) = .060 BETA ( 5) = 8.305 MACH = .59638 Q = 594.21 P = 2386.5 RN/L = 4.8456

SECTION ( 1)BODY FLAP LOWER DEPENDENT VARIABLE CP

| X/LB | 1.0180 | 1.0460 |
|---|---|---|
| PHI | | |
| .000 | -.1103 | -.1596 |
| 40.000 | -.1061 | -.1525 |

ALPHA ( 3) = 3.957 BETA ( 1) = -7.887 MACH = .59608 Q = 593.49 P = 2386.0 RN/L = 4.8432

SECTION ( 1)BODY FLAP LOWER DEPENDENT VARIABLE CP

| X/LB | 1.0180 | 1.0460 |
|---|---|---|
| PHI | | |
| .000 | -.1019 | -.1622 |
| 40.000 | -.1022 | -.1268 |

ALPHA ( 3) = 3.951 BETA ( 2) = -3.863 MACH = .59608 Q = 593.49 P = 2386.0 RN/L = 4.8432

SECTION ( 1)BODY FLAP LOWER DEPENDENT VARIABLE CP

| X/LB | 1.0180 | 1.0460 |
|---|---|---|
| PHI | | |
| .000 | -.1027 | -.1565 |
| 40.000 | -.1044 | -.1242 |

ALPHA ( 3) = 3.981 BETA ( 3) = .188 MACH = .59608 Q = 593.49 P = 2386.0 RN/L = 4.8432

SECTION ( 1)BODY FLAP LOWER DEPENDENT VARIABLE CP

| X/LB | 1.0180 | 1.0460 |
|---|---|---|
| PHI | | |
| .000 | -.0961 | -.1509 |
| 40.000 | -.1039 | -.1246 |

ALPHA ( 3) = 3.978 BETA ( 4) = 4.237 MACH = .59608 Q = 593.49 P = 2386.0 RN/L = 4.8432

SECTION ( 1)BODY FLAP LOWER DEPENDENT VARIABLE CP

| X/LB | 1.0180 | 1.0460 |
|---|---|---|
| PHI | | |
| .000 | -.1000 | -.1526 |
| 40.000 | -.1086 | -.1397 |

ORIGINAL PAGE IS
OF POOR QUALITY



AMES 11-073(OA148) -140A/B/C/R ORB BODY FLAP LWR (XE8G27)

ALPHA ( 3) = 3.980 BETA ( 5) = 8.292 MACH = .59608 Q = 593.49 P = 2386.0 RN/L = 4.8432

SECTION ( 1)BODY FLAP LOWER DEPENDENT VARIABLE CP

| X/LB | 1.0180 | 1.0460 |
|---|---|---|
| PHI | | |
| .000 | -.0981 | -.1545 |
| 40.000 | -.0979 | -.1455 |

ALPHA ( 4) = 7.936 BETA ( 1) = -7.885 MACH = .59590 Q = 593.13 P = 2386.0 RN/L = 4.8429

SECTION ( 1)BODY FLAP LOWER DEPENDENT VARIABLE CP

| X/LB | 1.0180 | 1.0460 |
|---|---|---|
| PHI | | |
| .000 | -.0896 | -.1534 |
| 40.000 | -.0872 | -.1192 |

ALPHA ( 4) = 7.944 BETA ( 2) = -3.857 MACH = .59590 Q = 593.13 P = 2386.0 RN/L = 4.8429

SECTION ( 1)BODY FLAP LOWER DEPENDENT VARIABLE CP

| X/LB | 1.0180 | 1.0460 |
|---|---|---|
| PHI | | |
| .000 | -.0891 | -.1460 |
| 40.000 | -.0896 | -.1125 |

ALPHA ( 4) = 8.045 BETA ( 3) = .182 MACH = .59590 Q = 593.13 P = 2386.0 RN/L = 4.8429

SECTION ( 1)BODY FLAP LOWER DEPENDENT VARIABLE CP

| X/LB | 1.0180 | 1.0460 |
|---|---|---|
| PHI | | |
| .000 | -.0870 | -.1419 |
| 40.000 | -.0977 | -.1229 |

ALPHA ( 4) = 8.043 BETA ( 4) = 4.239 MACH = .59590 Q = 593.13 P = 2386.0 RN/L = 4.8429

SECTION ( 1)BODY FLAP LOWER DEPENDENT VARIABLE CP

| X/LB | 1.0180 | 1.0460 |
|---|---|---|
| PHI | | |
| .000 | -.0856 | -.1422 |
| 40.000 | -.0921 | -.1291 |

AMES 11-073(OA148) -140A/B/C/R ORB BODY FLAP LWR (XE8G27)

ALPHA ( 4) = 8.041 BETA ( 5) = 3.297 MACH = .59590 Q = 593.13 P = 2386.0 RN/L = 4.8429

SECTION ( 1)BODY FLAP LOWER DEPENDENT VARIABLE CP

| X/LB | 1.0180 | 1.0460 |
|---|---|---|
| PHI | | |
| .000 | -.0876 | -.1452 |
| 40.000 | -.0864 | -.1362 |

ALPHA ( 5) = 11.909 BETA ( 1) = -7.850 MACH = .59646 Q = 594.33 P = 2386.5 RN/L = 4.8458

SECTION ( 1)BODY FLAP LOWER DEPENDENT VARIABLE CP

| X/LB | 1.0180 | 1.0460 |
|---|---|---|
| PHI | | |
| .000 | -.0712 | -.1410 |
| 40.000 | -.0743 | -.1113 |

ALPHA ( 5) = 11.929 BETA ( 2) = -3.836 MACH = .59646 Q = 594.33 P = 2386.5 RN/L = 4.8458

SECTION ( 1)BODY FLAP LOWER DEPENDENT VARIABLE CP

| X/LB | 1.0180 | 1.0460 |
|---|---|---|
| PHI | | |
| .000 | -.0703 | -.1413 |
| 40.000 | -.0805 | -.1136 |

ALPHA ( 5) = 11.930 BETA ( 3) = .181 MACH = .59646 Q = 594.33 P = 2386.5 RN/L = 4.8458

SECTION ( 1)BODY FLAP LOWER DEPENDENT VARIABLE CP

| X/LB | 1.0180 | 1.0460 |
|---|---|---|
| PHI | | |
| .000 | -.0698 | -.1297 |
| 40.000 | -.0769 | -.1133 |

ALPHA ( 5) = 11.930 BETA ( 4) = 4.251 MACH = .59646 Q = 594.33 P = 2386.5 RN/L = 4.8458

SECTION ( 1)BODY FLAP LOWER DEPENDENT VARIABLE CP

| X/LB | [illegible] | 1.0460 |
|---|---|---|
| PHI | | |
| [illegible] | [illegible] | [illegible] |
| [illegible] | [illegible] | [illegible] |

DATE 13 FEB 76 TABULATED PRESSURE DATA - OA148 ( AMES 11-073-1 )

AMES 11-073(OA148) -140A/B/C/R ORB BODY FLAP LWR (XEBG27)

ALPHA ( 5) = 11.920 BETA ( 5) = 8.317 MACH = .59646 Q = 594.33 P = 2386.5 RN/L = 4.8458

SECTION ( 1)BODY FLAP LOWER DEPENDENT VARIABLE CP

| X/LB | 1.0180 | 1.0460 |
|---|---|---|
| PHI | | |
| .000 | -.0702 | -.1293 |
| 40.000 | -.0732 | -.1236 |

AMES 11-073(OA148) -140A/B/C/R ORB BODY FLAP LWR (XEBG28) ( 05 AUG 75 )

REFERENCE DATA

SREF = 2690.0000 SQ.FT. XMRP = 1076.6800 IN. XO
LREF = 474.8000 IN. YMRP = .0000 IN. YO
BREF = 936.0680 IN. ZMRP = 375.0000 IN. ZO
SCALE = .0300

PARAMETRIC DATA

RUDDER = -10.000 SPDBRK = 35.000
BDFLAP = 16.300 L-ELVN = 10.000
R-ELVN = .000 MACH = 1.400

ALPHA ( 1) = -3.978 BETA ( 1) = -3.855 MACH = 1.3927 Q = 599.58 P = 441.59 RN/L = 2.9214

SECTION ( 1)BODY FLAP LOWER DEPENDENT VARIABLE CP

| X/LB | 1.0180 | 1.0460 |
|---|---|---|
| PHI | | |
| .000 | .2079 | .2089 |
| 40.000 | .1397 | .0977 |

ALPHA ( 1) = -3.971 BETA ( 2) = .185 MACH = 1.3927 Q = 599.58 P = 441.59 RN/L = 2.9214

SECTION ( 1)BODY FLAP LOWER DEPENDENT VARIABLE CP

| X/LB | 1.0180 | 1.0460 |
|---|---|---|
| PHI | | |
| .000 | .1911 | .2086 |
| 40.000 | .1277 | .0714 |

ALPHA ( 1) = -3.978 BETA ( 3) = 4.270 MACH = 1.3927 Q = 599.58 P = 441.59 RN/L = 2.9214

SECTION ( 1)BODY FLAP LOWER DEPENDENT VARIABLE CP

| X/LB | 1.0180 | 1.0460 |
|---|---|---|
| PHI | | |
| .000 | .1828 | .1949 |
| 40.000 | .1611 | .1026 |

ALPHA ( 2) = -.069 BETA ( 1) = -3.876 MACH = 1.3934 Q = 600.11 P = 441.59 RN/L = 2.9212

SECTION ( 1)BODY FLAP LOWER DEPENDENT VARIABLE CP

| X/LB | 1.0180 | 1.0460 |
|---|---|---|
| PHI | | |
| .000 | .2545 | .2474 |
| 40.000 | .1427 | [illegible] |

AMES 11-073(OA148) -140A/B/C/R ORB BODY FLAP LWR (XE8G28)

ALPHA ( 2) = -.045 BETA ( 2) = .182 MACH = 1.3934 Q = 600.11 P = 441.59 RN/L = 2.9212

SECTION ( 1)BODY FLAP LOWER DEPENDENT VARIABLE CP

| X/LB | 1.0180 | 1.0460 |
|---|---|---|
| PHI | | |
| .000 | .2571 | .2542 |
| 40.000 | .2096 | .1432 |

ALPHA ( 2) = -.049 BETA ( 3) = 4.247 MACH = 1.3934 Q = 600.11 P = 441.59 RN/L = 2.9212

SECTION ( 1)BODY FLAP LOWER DEPENDENT VARIABLE CP

| X/LB | 1.0180 | 1.0460 |
|---|---|---|
| PHI | | |
| .000 | .2460 | .2413 |
| 40.000 | .2120 | .1476 |

ALPHA ( 3) = 3.888 BETA ( 1) = -3.879 MACH = 1.3920 Q = 599.57 P = 442.06 RN/L = 2.9184

SECTION ( 1)BODY FLAP LOWER DEPENDENT VARIABLE CP

| X/LB | 1.0180 | 1.0460 |
|---|---|---|
| PHI | | |
| .000 | .3535 | .3340 |
| 40.000 | .3574 | .2596 |

ALPHA ( 3) = 3.892 BETA ( 2) = .179 MACH = 1.3920 Q = 599.57 P = 442.06 RN/L = 2.9184

SECTION ( 1)BODY FLAP LOWER DEPENDENT VARIABLE CP

| X/LB | 1.0180 | 1.0460 |
|---|---|---|
| PHI | | |
| .000 | .3499 | .3250 |
| 40.000 | .3123 | .2245 |

ALPHA ( 3) = 3.896 BETA ( 3) = 4.241 MACH = 1.3920 Q = 599.57 P = 442.06 RN/L = 2.9184

SECTION ( 1)BODY FLAP LOWER DEPENDENT VARIABLE CP

| X/LB | 1.0180 | 1.0460 |
|---|---|---|
| PHI | | |
| .000 | .3410 | .3297 |
| 40.000 | .2947 | .2105 |

AMES 11-073(OA148) -140A/B/C/R ORB BODY FLAP LWR (XEBG28)

ALPHA ( 4) = 7.940 BETA ( 1) = -3.870 MACH = 1.3916 Q = 599.57 P = 442.30 RN/L = 2.9184

SECTION ( 1)BODY FLAP LOWER DEPENDENT VARIABLE CP

| X/LB | 1.0180 | 1.0460 |
|---|---|---|
| PHI | | |
| .000 | .4710 | .4202 |
| 40.000 | .4537 | .3118 |

ALPHA ( 4) = 7.946 BETA ( 2) = .176 MACH = 1.3916 Q = 599.57 P = 442.30 RN/L = 2.9184

SECTION ( 1)BODY FLAP LOWER DEPENDENT VARIABLE CP

| X/LB | 1.0180 | 1.0460 |
|---|---|---|
| PHI | | |
| .000 | .4585 | .4055 |
| 40.000 | .4093 | .2872 |

ALPHA ( 4) = 7.949 BETA ( 3) = 4.238 MACH = 1.3916 Q = 599.57 P = 442.30 RN/L = 2.9184

SECTION ( 1)BODY FLAP LOWER DEPENDENT VARIABLE CP

| X/LB | 1.0180 | 1.0460 |
|---|---|---|
| PHI | | |
| .000 | .4547 | .4144 |
| 40.000 | .3808 | .2668 |

ALPHA ( 5) = 11.863 BETA ( 1) = -3.856 MACH = 1.3913 Q = 599.66 P = 442.53 RN/L = 2.9180

SECTION ( 1)BODY FLAP LOWER DEPENDENT VARIABLE CP

| X/LB | 1.0180 | 1.0460 |
|---|---|---|
| PHI | | |
| .000 | .5806 | .4795 |
| 40.000 | .5083 | .3399 |

ALPHA ( 5) = 11.873 BETA ( 2) = .179 MACH = 1.3913 Q = 599.66 P = 442.53 RN/L = 2.9180

SECTION ( 1)BODY FLAP LOWER DEPENDENT VARIABLE CP

| X/LB | 1.0180 | 1.0460 |
|---|---|---|
| PHI | | |
| .000 | .5750 | .4782 |
| 40.000 | .5716 | .3254 |

AMES 11-073(OA148) -140A/B/C/R ORB BODY FLAP LWR (XE8G28)

ALPHA ( 5) = 11.870 BETA ( 3) = 4.256 MACH = 1.3913 Q = 599.66 P = 442.53 RN/L = 2.9180

SECTION ( 1)BODY FLAP LOWER DEPENDENT VARIABLE CP

| X/LB | 1.0180 | 1.0460 |
|---|---|---|
| PHI | | |
| .000 | .5693 | .4875 |
| 40.000 | .4553 | .3231 |

ALPHA ( 6) = 15.854 BETA ( 1) = 3.831 MACH = 1.3903 Q = 599.44 P = 443.00 RN/L = 2.9206

SECTION ( 1)BODY FLAP LOWER DEPENDENT VARIABLE CP

| X/LB | 1.0180 | 1.0460 |
|---|---|---|
| PHI | | |
| .000 | .6721 | .5286 |
| 40.000 | .5398 | .3547 |

ALPHA ( 5) = 15.868 BETA ( 2) = .178 MACH = 1.3903 Q = 599.44 P = 443.00 RN/L = 2.9206

SECTION ( 1)BODY FLAP LOWER DEPENDENT VARIABLE CP

| X/LB | 1.0180 | 1.0460 |
|---|---|---|
| PHI | | |
| .000 | .6779 | .5359 |
| 40.000 | .5326 | .3598 |

ALPHA ( 6) = 15.859 BETA ( 3) = 4.283 MACH = 1.3903 Q = 599.44 P = 443.00 RN/L = 2.9206

SECTION ( 1)BODY FLAP LOWER DEPENDENT VARIABLE CP

| X/LB | 1.0180 | 1.0460 |
|---|---|---|
| PHI | | |
| .000 | .6702 | .5448 |
| 40.000 | .5211 | .3680 |

ORIGINAL PAGE IS
OF POOR QUALITY

AMES 11-073(OA148) -140A/B/C/R ORB BODY FLAP LWR (XE8G29) ( 05 AUG 75 )

REFERENCE DATA

SREF = 2690.0000 SQ.FT. XMRP = 1076.6800 IN. XO
LREF = 474.8000 IN. YMRP = .0000 IN. YO
BREF = 936.0680 IN. ZMRP = 375.0000 IN. ZO
SCALE = .0300

PARAMETRIC DATA

RUDDER = -10.000 SPDBRK = 35.000
BDFLAP = 16.300 L-ELVN = 10.000
R-ELVN = .000 MACH = 1.250

ALPHA ( 1) = -3.986 BETA ( 1) = -3.845 MACH = 1.2451 Q = 599.58 P = 552.51 RN/L = 3.0225

SECTION ( 1)BODY FLAP LOWER DEPENDENT VARIABLE CP

| X/LB | 1.0180 | 1.0460 |
|---|---|---|
| PHI | | |
| .000 | .2307 | .1957 |
| 40.000 | .1536 | .0881 |

ALPHA ( 1) = -3.967 BETA ( 2) = .186 MACH = 1.2451 Q = 599.58 P = 552.51 RN/L = 3.0225

SECTION ( 1)BODY FLAP LOWER DEPENDENT VARIABLE CP

| X/LB | 1.0180 | 1.0460 |
|---|---|---|
| PHI | | |
| .000 | .2259 | .2129 |
| 40.000 | .1144 | .0685 |

ALPHA ( 1) = -3.974 BETA ( 3) = 4.269 MACH = 1.2451 Q = 599.58 P = 552.51 RN/L = 3.0225

SECTION ( 1)BODY FLAP LOWER DEPENDENT VARIABLE CP

| X/LB | 1.0180 | 1.0460 |
|---|---|---|
| PHI | | |
| .000 | .2131 | .1946 |
| 40.000 | .1653 | .0928 |

ALPHA ( 2) = -.035 BETA ( 1) = -3.871 MACH = 1.2459 Q = 599.80 P = 552.04 RN/L = 3.0192

SECTION ( 1)BODY FLAP LOWER DEPENDENT VARIABLE CP

| X/LB | 1.0180 | 1.0460 |
|---|---|---|
| PHI | | |
| .000 | .2765 | .2418 |
| 40.000 | .2770 | .1856 |

AMES 11-073(OA148) -140A/B/C/R ORB BODY FLAP LWR (XE8G29)

ALPHA ( 2) = -.027 BETA ( 2) = .182 MACH = 1.2459 Q = 599.80 P = 552.04 RN/L = 3.0192

SECTION ( 1)BODY FLAP LOWER DEPENDENT VARIABLE CP

| X/LB | 1.0180 | 1.0460 |
|---|---|---|
| PHI | | |
| .000 | .2947 | .2557 |
| 40.000 | .2222 | .1385 |

ALPHA ( 2) = -.032 BETA ( 3) = 4.246 MACH = 1.2459 Q = 599.80 P = 552.04 RN/L = 3.0192

SECTION ( 1)BODY FLAP LOWER DEPENDENT VARIABLE CP

| X/LB | 1.0180 | 1.0460 |
|---|---|---|
| PHI | | |
| .000 | .2717 | .2379 |
| 40.000 | .2247 | .1292 |

ALPHA ( 3) = 3.922 BETA ( 1) = -3.869 MACH = 1.2454 Q = 599.82 P = 552.51 RN/L = 3.0214

SECTION ( 1)BODY FLAP LOWER DEPENDENT VARIABLE CP

| X/LB | 1.0180 | 1.0460 |
|---|---|---|
| PHI | | |
| .000 | .3903 | .3206 |
| 40.000 | .3943 | .2358 |

ALPHA ( 3) = 3.922 BETA ( 2) = .180 MACH = 1.2454 Q = 599.82 P = 552.51 RN/L = 3.0214

SECTION ( 1)BODY FLAP LOWER DEPENDENT VARIABLE CP

| X/LB | 1.0180 | 1.0460 |
|---|---|---|
| PHI | | |
| .000 | .3957 | .3159 |
| 40.000 | .3334 | .2062 |

ALPHA ( 3) = 3.925 BETA ( 3) = 4.237 MACH = 1.2454 Q = 599.82 P = 552.51 RN/L = 3.0214

SECTION ( 1)BODY FLAP LOWER DEPENDENT VARIABLE CP

| X/LB | 1.0180 | 1.0460 |
|---|---|---|
| PHI | | |
| .000 | .3835 | .3178 |
| 40.000 | .3074 | .1853 |

AMES 11-073(OA148) -140A/B/C/R ORB BODY FLAP LWR (XE8G29)

ALPHA ( 4) = 7.990 BETA ( 1) = -3.870 MACH = 1.2446 Q = 599.59 P = 552.98 RN/L = 3.0205

SECTION ( 1)BODY FLAP LOWER DEPENDENT VARIABLE CP

| X/LB | 1.0180 | 1.0460 |
|---|---|---|
| PHI | | |
| .000 | .4971 | .3830 |
| 40.000 | .4695 | .2712 |

ALPHA ( 4) = 7.994 BETA ( 2) = .176 MACH = 1.2446 Q = 599.59 P = 552.98 RN/L = 3.0205

SECTION ( 1)BODY FLAP LOWER DEPENDENT VARIABLE CP

| X/LB | 1.0180 | 1.0460 |
|---|---|---|
| PHI | | |
| .000 | .4975 | .3804 |
| 40.000 | .4190 | .2532 |

ALPHA ( 4) = 7.996 BETA ( 3) = 4.240 MACH = 1.2446 Q = 599.59 P = 552.98 RN/L = 3.0205

SECTION ( 1)BODY FLAP LOWER DEPENDENT VARIABLE CP

| X/LB | 1.0180 | 1.0460 |
|---|---|---|
| PHI | | |
| .000 | .4977 | .3867 |
| 40.000 | .3878 | .2354 |

ALPHA ( 5) = 11.923 BETA ( 1) = -3.851 MACH = 1.2447 Q = 599.71 P = 552.98 RN/L = 3.0237

SECTION ( 1)BODY FLAP LOWER DEPENDENT VARIABLE CP

| X/LB | 1.0180 | 1.0460 |
|---|---|---|
| PHI | | |
| .000 | .5855 | .4292 |
| 40.000 | .5162 | .2973 |

ALPHA ( 5) = 11.934 BETA ( 2) = .177 MACH = 1.2447 Q = 599.71 P = 552.98 RN/L = 3.0237

SECTION ( 1)BODY FLAP LOWER DEPENDENT VARIABLE CP

| X/LB | 1.0180 | 1.0460 |
|---|---|---|
| PHI | | |
| .000 | .5823 | .4231 |
| 40.000 | .4673 | .2780 |

AMES 11-073(OA148) -140A/B/C/R ORB BODY FLAP LWR (XEBG29)

ALPHA ( 5) = 11.927 BETA ( 3) = 4.253 MACH = 1.2447 Q = 599.71 P = 552.98 RN/L = 3.0237

SECTION : 1)BODY FLAP LOWER DEPENDENT VARIABLE CP

| X/LB | 1.0180 | 1.0460 |
|---|---|---|
| PHI | | |
| .000 | .5857 | .4292 |
| 40.000 | .4490 | .2566 |

AMES 11-073(OA148) -140A/B/C/R ORB BODY FLAP LWR (XE8G3D) ( 05 AUG 75 )

REFERENCE DATA

SREF = 2690.0000 SQ.FT. XMRP = 1076.6800 IN. XO
LREF = 474.6000 IN. YMRP = .0000 IN. YO
BREF = 936.0680 IN. ZMRP = 375.0000 IN. ZO
SCALE = .0300

PARAMETRIC DATA

RUDDER = -10.000 SPDBRK = 35.000
BDFLAP = 16.300 L-ELVN = 10.000
R-ELVN = .000 MACH = 1.100

ALPHA ( 1) = -3.994 BETA ( 1) = -3.852 MACH = 1.0997 Q = 600.21 P = 709.06 RN/L = 3.1908

SECTION ( 1)BODY FLAP LOWER DEPENDENT VARIABLE CP

| X/LB | 1.0180 | 1.0430 |
|---|---|---|
| PHI | | |
| .000 | .2817 | .1999 |
| 40.000 | .2011 | .1185 |

ALPHA ( 1) = -3.985 BETA ( 2) = .190 MACH = 1.0997 Q = 600.21 P = 709.06 RN/L = 3.1908

SECTION ( 1)BODY FLAP LOWER DEPENDENT VARIABLE CP

| X/LB | 1.0180 | 1.0460 |
|---|---|---|
| PHI | | |
| .000 | .3038 | .2302 |
| 40.000 | .1732 | .0985 |

ALPHA ( 1) = -3.992 BETA ( 3) = 4.268 MACH = 1.0997 Q = 600.21 P = 709.06 RN/L = 3.1908

SECTION ( 1)BODY FLAP LOWER DEPENDENT VARIABLE CP

| X/LB | 1.0180 | 1.0460 |
|---|---|---|
| PHI | | |
| .000 | .2761 | .2095 |
| 40.000 | .2057 | .0961 |

ALPHA ( 2) = -.020 BETA ( 1) = -3.866 MACH = 1.0986 Q = 599.48 P = 709.54 RN/L = 3.1886

SECTION ( 1)BODY FLAP LOWER DEPENDENT VARIABLE CP

| X/LB | 1.0180 | 1.0460 |
|---|---|---|
| PHI | | |
| .000 | .3124 | .2179 |
| 40.000 | .3333 | .1632 |

AMES 11-073(OA148) -140A/B/C/R ORB BODY FLAP LWR (XE8030)

ALPHA ( 2) = -.014 BETA ( 2) = .187 MACH = 1.0986 Q = 599.48 P = 709.54 RN/L = 3.1886

SECTION ( 1)BODY FLAP LOWER DEPENDENT VARIABLE CP

| X/LB | 1.0180 | 1.0460 |
|---|---|---|
| PHI | | |
| .000 | .3616 | .2403 |
| 40.000 | .2690 | .1298 |

ALPHA ( 2) = -.017 BETA ( 3) = 4.244 MACH = 1.0986 Q = 599.48 P = 709.54 RN/L = 3.1886

SECTION ( 1)BODY FLAP LOWER DEPENDENT VARIABLE CP

| X/LB | 1.0180 | 1.0460 |
|---|---|---|
| PHI | | |
| .000 | .3226 | .2343 |
| 40.000 | .2520 | .1124 |

ALPHA ( 3) = 3.958 BETA ( 1) = -3.869 MACH = 1.1006 Q = 600.44 P = 708.14 RN/L = 3.1894

SECTION ( 1)BODY FLAP LOWER DEPENDENT VARIABLE CP

| X/LB | 1.0180 | 1.0460 |
|---|---|---|
| PHI | | |
| .000 | .4083 | .2676 |
| 40.000 | .4055 | .1825 |

ALPHA ( 3) = 3.959 BETA ( 2) = .177 MACH = 1.1006 Q = 600.44 P = 708.14 RN/L = 3.1894

SECTION ( 1)BODY FLAP LOWER DEPENDENT VARIABLE CP

| X/LB | 1.0180 | 1.0460 |
|---|---|---|
| PHI | | |
| .000 | .4262 | .2811 |
| 40.000 | .3568 | .1701 |

ALPHA ( 3) = 3.960 BETA ( 3) = 4.234 MACH = 1.1006 Q = 600.44 P = 708.14 RN/L = 3.1894

SECTION ( 1)BODY FLAP LOWER DEPENDENT VARIABLE CP

| X/LB | 1.0180 | 1.0460 |
|---|---|---|
| PHI | | |
| .000 | .4127 | .2802 |
| 40.000 | .3147 | .1428 |

AMES 11-073(OA148) -140A/B/C/R ORB BODY FLAP LWR (XE8G30)

ALPHA ( 4) = 8.035 BETA ( 1) = -3.862 MACH = 1.0985 Q = 599.52 P = 709.77 RN/L = 3.1893

SECTION ( 1)BODY FLAP LOWER DEPENDENT VARIABLE CP

| X/LB | 1.0180 | 1.0460 |
|---|---|---|
| PHI | | |
| .000 | .4939 | .3099 |
| 40.000 | .4453 | .1994 |

ALPHA ( 4) = 8.041 BETA ( 2) = .181 MACH = 1.0985 Q = 599.52 P = 709.77 RN/L = 3.1893

SECTION ( 1)BODY FLAP LOWER DEPENDENT VARIABLE CP

| X/LB | 1.0180 | 1.0460 |
|---|---|---|
| PHI | | |
| .000 | .5030 | .3122 |
| 40.000 | .4178 | .1863 |

ALPHA ( 4) = 8.040 BETA ( 3) = 4.238 MACH = 1.0985 Q = 599.52 P = 709.77 RN/L = 3.1893

SECTION ( 1)BODY FLAP LOWER DEPENDENT VARIABLE CP

| X/LB | 1.0180 | 1.0460 |
|---|---|---|
| PHI | | |
| .000 | .5005 | .3156 |
| 40.000 | .3800 | .1671 |

ALPHA ( 5) = 11.975 BETA ( 1) = -3.843 MACH = 1.0970 Q = 599.10 P = 711.19 RN/L = 3.1892

SECTION ( 1)BODY FLAP LOWER DEPENDENT VARIABLE CP

| X/LB | 1.0180 | 1.0460 |
|---|---|---|
| PHI | | |
| .000 | .5571 | .3355 |
| 40.000 | .4762 | .2070 |

ALPHA ( 5) = 11.985 BETA ( 2) = .181 MACH = 1.0970 Q = 599.10 P = 711.19 RN/L = 3.1892

SECTION ( 1)BODY FLAP LOWER DEPENDENT VARIABLE CP

| X/LB | 1.0180 | 1.0460 |
|---|---|---|
| PHI | | |
| .000 | .5621 | .3412 |
| 40.000 | .4523 | .1981 |

AMES 11-073(OA148) -140A/B/C/R ORB BODY FLAP LWR (XE8G30)

ALPHA ( 5) = 11.977 BETA ( 3) = 4.250 MACH = 1.0970 Q = 599.10 P = 711.19 RN/L = 3.1892

SECTION ( 1)BODY FLAP LOWER DEPENDENT VARIABLE CP

| X/LB | 1.0180 | 1.0460 |
|---|---|---|
| PHI | | |
| .000 | .5626 | .3384 |
| 40.000 | .4155 | .1766 |

AMES 11-073(OA148) -140A/B/C/R ORB BODY FLAP LWR (XE8G31) ( 05 AUG 75 )

REFERENCE DATA

SREF = 2690.0000 SQ.FT. XMRP = 1076.6800 IN. XO
LREF = 474.8000 IN. YMRP = .0000 IN. YO
BREF = 936.0880 IN. ZMRP = 375.0000 IN. ZO
SCALE = .0300

PARAMETRIC DATA

RUDDER = -10.000 SPDBRK = 35.000
BDFLAP = 16.300 L-ELVN = 10.000
R-ELVN = .000 MACH = .900

ALPHA ( 1) = -3.977 BETA ( 1) = -3.852 MACH = .89977 Q = 600.28 P = 1059.2 RN/L = 3.5777

SECTION ( 1)BODY FLAP LOWER DEPENDENT VARIABLE CP

| X/LB | 1.0180 | 1.0460 |
|---|---|---|
| PHI | | |
| .000 | .3010 | .1081 |
| 40.000 | .2314 | .0556 |

ALPHA ( 1) = -3.975 BETA ( 2) = .187 MACH = .89977 Q = 600.28 P = 1059.2 RN/L = 3.5777

SECTION ( 1)BODY FLAP LOWER DEPENDENT VARIABLE CP

| X/LB | 1.0180 | 1.0460 |
|---|---|---|
| PHI | | |
| .000 | .3340 | .1213 |
| 40.000 | .1962 | .0325 |

ALPHA ( 1) = -3.985 BETA ( 3) = 4.269 MACH = .89977 Q = 600.28 P = 1059.2 RN/L = 3.5777

SECTION ( 1)BODY FLAP LOWER DEPENDENT VARIABLE CP

| X/LB | 1.0180 | 1.0460 |
|---|---|---|
| PHI | | |
| .000 | .3069 | .1030 |
| 40.000 | .2206 | .0175 |

ALPHA ( 2) = -.002 BETA ( 1) = -3.870 MACH = .89780 Q = 598.63 P = 1060.9 RN/L = 3.5706

SECTION ( 1)BODY FLAP LOWER DEPENDENT VARIABLE CP

| X/LB | 1.0180 | 1.0460 |
|---|---|---|
| PHI | | |
| .000 | .3119 | .1139 |
| 40.000 | .2855 | .0720 |

AMES 11-073(OA148) -140A/B/C/R ORB BODY FLAP LWR (XEBG31)

ALPHA ( 2) = .000 BETA ( 2) = .184 MACH = .89780 Q = 598.63 P = 1060.9 RN/L = 3.5706

SECTION ( 1)BODY FLAP LOWER DEPENDENT VARIABLE CP

| X/LB | 1.0180 | 1.0460 |
|---|---|---|
| PHI | | |
| .000 | .3279 | .1110 |
| 40.000 | .2287 | .0256 |

ALPHA ( 2) = -.010 BETA ( 3) = 4.247 MACH = .89780 Q = 598.63 P = 1060.9 RN/L = 3.5706

SECTION ( 1)BODY FLAP LOWER DEPENDENT VARIABLE CP

| X/LB | 1.0180 | 1.0460 |
|---|---|---|
| PHI | | |
| .000 | .3079 | .1067 |
| 40.000 | .2076 | .0114 |

ALPHA ( 3) = 3.984 BETA ( 1) = -3.872 MACH = .89870 Q = 599.00 P = 1059.5 RN/L = 3.5709

SECTION ( 1)BODY FLAP LOWER DEPENDENT VARIABLE CP

| X/LB | 1.0180 | 1.0460 |
|---|---|---|
| PHI | | |
| .000 | .3632 | .1241 |
| 40.000 | .2993 | .0639 |

ALPHA ( 3) = 3.983 BETA ( 2) = .184 MACH = .89870 Q = 599.00 P = 1059.5 RN/L = 3.5709

SECTION ( 1)BODY FLAP LOWER DEPENDENT VARIABLE CP

| X/LB | 1.0180 | 1.0460 |
|---|---|---|
| PHI | | |
| .000 | .3577 | .1243 |
| 40.000 | .2644 | .0401 |

ALPHA ( 3) = 3.979 BETA ( 3) = 4.243 MACH = .89870 Q = 599.00 P = 1059.5 RN/L = 3.5709

SECTION ( 1)BODY FLAP LOWER DEPENDENT VARIABLE CP

| X/LB | 1.0180 | 1.0460 |
|---|---|---|
| PHI | | |
| .000 | .3653 | .1251 |
| 40.000 | .2423 | .0205 |

AMES 11-073(OA148) -140A/B/C/R ORB BODY FLAP LWR (XE8G31)

ALPHA ( 4) = 8.057 BETA ( 1) = -3.860 MACH = .89807 Q = 598.57 P = 1060.2 RN/L = 3.5677

SECTION ( 1)BODY FLAP LOWER DEPENDENT VARIABLE CP

| X/LB | 1.0180 | 1.0460 |
|---|---|---|
| PHI | | |
| .000 | .3959 | .1346 |
| 40.000 | .3157 | .0567 |

ALPHA ( 4) = 8.064 BETA ( 2) = .187 MACH = .89807 Q = 598.57 P = 1060.2 RN/L = 3.5677

SECTION ( 1)BODY FLAP LOWER DEPENDENT VARIABLE CP

| X/LB | 1.0180 | 1.0460 |
|---|---|---|
| PHI | | |
| .000 | .3975 | .1320 |
| 40.000 | .2889 | .0383 |

ALPHA ( 4) = 8.059 BETA ( 3) = 4.245 MACH = .89807 Q = 598.57 P = 1060.2 RN/L = 3.5677

SECTION ( 1)BODY FLAP LOWER DEPENDENT VARIABLE CP

| X/LB | 1.0180 | 1.0460 |
|---|---|---|
| PHI | | |
| .000 | .4072 | .1413 |
| 40.000 | .2753 | .0355 |

ALPHA ( 5) = 11.980 BETA ( 1) = -3.854 MACH = .89717 Q = 598.01 P = 1061.4 RN/L = 3.5714

SECTION ( 1)BODY FLAP LOWER DEPENDENT VARIABLE CP

| X/LB | 1.0180 | 1.0460 |
|---|---|---|
| PHI | | |
| .000 | .4209 | .1395 |
| 40.000 | .3141 | .0499 |

ALPHA ( 5) = 11.990 BETA ( 2) = .184 MACH = .89717 Q = 598.01 P = 1061.4 RN/L = 3.5714

SECTION ( 1)BODY FLAP LOWER DEPENDENT VARIABLE CP

| X/LB | 1.0180 | 1.0460 |
|---|---|---|
| PHI | | |
| .000 | .4216 | .1373 |
| 40.000 | .2954 | .0238 |

AMES 11-073(OA148) -140A/B/C/R ORB BODY FLAP LWR (XE8G3!)

ALPHA ( 5) = 11.975 BETA ( 3) = 4.259 MACH = .89717 Q = 598.01 P = 1061.4 RN/L = 3.5714

SECTION ( 1)BODY FLAP LOWER DEPENDENT VARIABLE CP

| X/LB | 1.0180 | 1.0460 |
|---|---|---|
| PHI | | |
| .000 | .4272 | .1436 |
| 40.000 | .2793 | .0136 |

AMES 11-073(OA148) -140A/B/C/R ORB BODY FLAP LWR (XEBG32) ( 05 AUG 75 )

REFERENCE DATA

SREF = 2692.0000 SQ.FT. XMRP = 1076.6800 IN. XO
LREF = 474.8000 IN. YMRP = .0000 IN. YO
BREF = 936.0680 IN. ZMRP = 375.0000 IN. ZO
SCALE = .0300

PARAMETRIC DATA

RUDDER = -10.000 SPDBRK = 35.000
BDFLAP = 16.300 L-ELVN = 10.000
R-ELVN = .000 MACH = .600

ALPHA ( 1) = -4.052 BETA ( 1) = -7.850 MACH = .59664 Q = 594.68 P = 2386.3 RN/L = 4.8170

SECTION ( 1)BODY FLAP LOWER DEPENDENT VARIABLE CP

| X/LB | 1.0180 | 1.0460 |
|---|---|---|
| PHI | | |
| .000 | .2299 | -.0037 |
| 40.000 | .1653 | .0173 |

ALPHA ( 1) = -4.036 BETA ( 2) = -3.835 MACH = .59664 Q = 594.68 P = 2386.3 RN/L = 4.8170

SECTION ( 1)BODY FLAP LOWER DEPENDENT VARIABLE CP

| X/LB | 1.0180 | 1.0460 |
|---|---|---|
| PHI | | |
| .000 | .2355 | .0040 |
| 40.000 | .1666 | -.0041 |

ALPHA ( 1) = -4.020 BETA ( 3) = .192 MACH = .59664 Q = 594.68 P = 2386.3 RN/L = 4.8170

SECTION ( 1)BODY FLAP LOWER DEPENDENT VARIABLE CP

| X/LB | 1.0180 | 1.0460 |
|---|---|---|
| PHI | | |
| .000 | .2637 | .0258 |
| 40.000 | .1610 | -.0365 |

ALPHA ( 1) = -4.028 BETA ( 4) = 4.273 MACH = .59664 Q = 594.68 P = 2386.3 RN/L = 4.8170

SECTION ( 1)BODY FLAP LOWER DEPENDENT VARIABLE CP

| X/LB | 1.0180 | 1.0460 |
|---|---|---|
| PHI | | |
| .000 | .2491 | .0269 |
| 40.000 | .1643 | -.0477 |

AMES 11-073(OA148) -140A/B/C/R ORB BODY FLAP LWR (XE8G32)

ALPHA ( 1) = -4.045 BETA ( 5) = 8.346 MACH = .59664 Q = 594.68 P = 2386.3 RN/L = 4.8170

SECTION ( 1)BODY FLAP LOWER DEPENDENT VARIABLE CP

| X/LB | 1.0180 | 1.0460 |
|---|---|---|
| PHI | | |
| .000 | .2377 | .0163 |
| 40.000 | .1431 | -.0630 |

ALPHA ( 2) = .034 BETA ( 1) = -7.883 MACH = .59622 Q = 593.85 P = 2386.3 RN/L = 4.8132

SECTION ( 1)BODY FLAP LOWER DEPENDENT VARIABLE CP

| X/LB | 1.0180 | 1.0460 |
|---|---|---|
| PHI | | |
| .000 | .2687 | .0137 |
| 40.000 | .1925 | .0364 |

ALPHA ( 2) = .043 BETA ( 2) = -3.857 MACH = .59622 Q = 593.85 P = 2386.3 RN/L = 4.8132

SECTION ( 1)BODY FLAP LOWER DEPENDENT VARIABLE CP

| X/LB | 1.0180 | 1.0460 |
|---|---|---|
| PHI | | |
| .000 | .2567 | .0150 |
| 40.000 | .1928 | .0017 |

ALPHA ( 2) = .045 BETA ( 3) = .186 MACH = .59622 Q = 593.85 P = 2386.3 RN/L = 4.8132

SECTION ( 1)BODY FLAP LOWER DEPENDENT VARIABLE CP

| X/LB | 1.0180 | 1.0460 |
|---|---|---|
| PHI | | |
| .000 | .2588 | .0250 |
| 40.000 | .1735 | -.0426 |

ALPHA ( 2) = .041 BETA ( 4) = 4.251 MACH = .59622 Q = 593.85 P = 2386.3 RN/L = 4.8132

SECTION ( 1)BODY FLAP LOWER DEPENDENT VARIABLE CP

| X/LB | 1.0180 | 1.0460 |
|---|---|---|
| PHI | | |
| .000 | .2612 | .0209 |
| 40.000 | .1547 | -.0523 |

ORIGINAL PAGE IS OF POOR QUALITY

AMES 11-073(OA148) -140A/B/C/R ORB BODY FLAP LWR (XE8G32)

ALPHA ( 2) = .035 BETA ( 5) = 8.312 MACH = .59622 Q = 593.85 P = 2386.3 RN/L = 4.8132

SECTION ( 1)BODY FLAP LOWER DEPENDENT VARIABLE CP

| X/LB | 1.0180 | 1.0460 |
|---|---|---|
| PHI | | |
| .000 | .2733 | .0297 |
| 40.000 | .1473 | -.0552 |

ALPHA ( 3) = 4.014 BETA ( 1) = -7.879 MACH = .59602 Q = 593.50 P = 2386.4 RN/L = 4.8147

SECTION ( 1)BODY FLAP LOWER DEPENDENT VARIABLE CP

| X/LB | 1.0180 | 1.0460 |
|---|---|---|
| PHI | | |
| .000 | .2892 | .0275 |
| 40.000 | .2166 | .0313 |

ALPHA ( 3) = 4.016 BETA ( 2) = -3.855 MACH = .59602 Q = 593.50 P = 2386.4 RN/L = 4.8147

SECTION ( 1)BODY FLAP LOWER DEPENDENT VARIABLE CP

| X/LB | 1.0180 | 1.0460 |
|---|---|---|
| PHI | | |
| .000 | .2778 | .0312 |
| 40.000 | .2071 | -.0085 |

ALPHA ( 3) = 4.015 BETA ( 3) = .196 MACH = .59602 Q = 593.50 P = 2386.4 RN/L = 4.8147

SECTION ( 1)BODY FLAP LOWER DEPENDENT VARIABLE CP

| X/LB | 1.0180 | 1.0460 |
|---|---|---|
| PHI | | |
| .000 | .2793 | .0241 |
| 40.000 | .1849 | -.0332 |

ALPHA ( 3) = 4.015 BETA ( 4) = 4.243 MACH = .59602 Q = 593.50 P = 2386.4 RN/L = 4.8147

SECTION ( 1)BODY FLAP LOWER DEPENDENT VARIABLE CP

| X/LB | 1.0180 | 1.0460 |
|---|---|---|
| PHI | | |
| .000 | .2849 | .0272 |
| 40.000 | .1775 | -.0381 |

AMES 11-073(OA148) -140A/B/C/R ORB BODY FLAP LWR (XE8G32)

ALPHA ( 3) = 4.018 BETA ( 5) = 8.295 MACH = .59602 Q = 593.50 P = 2386.4 RN/L = 4.8147

SECTION ( 1)BODY FLAP LOWER DEPENDENT VARIABLE CP

| X/LB | 1.0180 | 1.0460 |
|---|---|---|
| PHI | | |
| .000 | .2964 | .0426 |
| 40.000 | .1704 | -.0439 |

ALPHA ( 4) = 8.080 BETA ( 1) = -7.877 MACH = .59636 Q = 594.21 P = 2386.7 RN/L = 4.8181

SECTION ( 1)BODY FLAP LOWER DEPENDENT VARIABLE CP

| X/LB | 1.0180 | 1.0460 |
|---|---|---|
| PHI | | |
| .000 | .3100 | .0338 |
| 40.000 | .2272 | .0236 |

ALPHA ( 4) = 8.089 BETA ( 2) = -3.848 MACH = .59636 Q = 594.21 P = 2386.7 RN/L = 4.8181

SECTION ( 1)BODY FLAP LOWER DEPENDENT VARIABLE CP

| X/LB | 1.0180 | 1.0460 |
|---|---|---|
| PHI | | |
| .000 | .3101 | .0387 |
| 40.000 | .2243 | -.0074 |

ALPHA ( 4) = 8.087 BETA ( 3) = .188 MACH = .59636 Q = 594.21 P = 2386.7 RN/L = 4.8181

SECTION ( 1)BODY FLAP LOWER DEPENDENT VARIABLE CP

| X/LB | 1.0180 | 1.0460 |
|---|---|---|
| PHI | | |
| .000 | .3087 | .0371 |
| 40.000 | .2101 | -.0199 |

ALPHA ( 4) = 8.086 BETA ( 4) = 4.243 MACH = .59636 Q = 594.21 P = 2386.7 RN/L = 4.8181

SECTION ( 1)BODY FLAP LOWER DEPENDENT VARIABLE CP

| X/LB | 1.0180 | 1.0460 |
|---|---|---|
| PHI | | |
| .000 | .3143 | .0442 |
| 40.000 | .1969 | -.0279 |

AMES 11-073(OA148) -140A/B/C/R ORB BODY FLAP LWR (XE8G32)

ALPHA ( 4) = 8.082 BETA ( 5) = 8.301 MACH = .59636 Q = 594.21 P = 2386.7 RN/L = 4.8181

SECTION ( 1)BODY FLAP LOWER DEPENDENT VARIABLE CP

| X/LB | 1.0180 | 1.0460 |
|---|---|---|
| PHI | | |
| .000 | .3144 | .0454 |
| 40.000 | .1835 | -.0470 |

ALPHA ( 5) = 12.017 BETA ( 1) = -7.830 MACH = .59626 Q = 593.97 P = 2386.7 RN/L = 4.8175

SECTION ( 1)BODY FLAP LOWER DEPENDENT VARIABLE CP

| X/LB | 1.0180 | 1.0460 |
|---|---|---|
| PHI | | |
| .000 | .3253 | .0457 |
| 40.000 | .2372 | .0275 |

ALPHA ( 5) = 12.037 BETA ( 2) = -3.825 MACH = .59626 Q = 593.97 P = 2386.7 RN/L = 4.8175

SECTION ( 1)BODY FLAP LOWER DEPENDENT VARIABLE CP

| X/LB | 1.0180 | 1.0460 |
|---|---|---|
| PHI | | |
| .000 | .3299 | .0487 |
| 40.000 | .2378 | .0036 |

ALPHA ( 5) = 12.038 BETA ( 3) = .185 MACH = .59626 Q = 593.97 P = 2386.7 RN/L = 4.8175

SECTION ( 1)BODY FLAP LOWER DEPENDENT VARIABLE CP

| X/LB | 1.0180 | 1.0460 |
|---|---|---|
| PHI | | |
| .000 | .3344 | .0511 |
| 40.000 | .2294 | -.0039 |

ALPHA ( 5) = 12.033 BETA ( 4) = 4.256 MACH = .59626 Q = 593.97 P = 2386.7 RN/L = 4.8175

SECTION ( 1)BODY FLAP LOWER DEPENDENT VARIABLE CP

| X/LB | 1.0180 | 1.0460 |
|---|---|---|
| PHI | | |
| .000 | .3356 | .0545 |
| 40.000 | .2173 | -.0235 |

AMES 11-073(OA148) -140A/B/C/R ORB BODY FLAP LWR (XE8G32)

ALPHA ( 5) = 12.024 BETA ( 5) = 8.318 MACH = .59626 Q = 593.97 P = 2386.7 RN/L = 4.8175

SECTION ( 1)BODY FLAP LOWER DEPENDENT VARIABLE CP

| X/LB | 1.0180 | 1.0460 |
|---|---|---|
| PHI | | |
| .000 | .3352 | .0615 |
| 40.000 | .1950 | -.0296 |

AMES 11-073(OA148) -140A/B/C/R ORB BODY FLAP LWR (XEBG33) ( 05 AUG 75 )

REFERENCE DATA

SREF = 2690.0000 SQ.FT. XMRP = 1076.6800 IN. XO
LREF = 474.8000 IN. YMRP = .0000 IN. YO
BREF = 936.0680 IN. ZMRP = 375.0000 IN. ZO
SCALE = .0300

PARAMETRIC DATA

RUDDER = 10.000 SPDBRK = 35.000
BDFLAP = 16.300 L-ELVN = .000
R-ELVN = 10.000 MACH = 1.400

ALPHA ( 1) = -4.110 BETA ( 1) = -3.848 MACH = 1.3952 Q = 599.12 P = 439.71 RN/L = 2.9043

SECTION ( 1)BODY FLAP LOWER DEPENDENT VARIABLE CP

| X/LB | 1.0180 | 1.0460 |
|---|---|---|
| PHI | | |
| .000 | .1930 | .2053 |
| 40.000 | .0454 | .0016 |

ALPHA ( 1) = -4.105 BETA ( 2) = .195 MACH = 1.3952 Q = 599.12 P = 439.71 RN/L = 2.9043

SECTION ( 1)BODY FLAP LOWER DEPENDENT VARIABLE CP

| X/LB | 1.0180 | 1.0460 |
|---|---|---|
| PHI | | |
| .000 | .1914 | .2053 |
| 40.000 | .1075 | .0566 |

ALPHA ( 1) = -4.114 BETA ( 3) = 4.277 MACH = 1.3952 Q = 599.12 P = 439.71 RN/L = 2.9043

SECTION ( 1)BODY FLAP LOWER DEPENDENT VARIABLE CP

| X/LB | 1.0180 | 1.0460 |
|---|---|---|
| PHI | | |
| .000 | .2091 | .1989 |
| 40.000 | .0962 | .0772 |

ALPHA ( 2) = -.049 BETA ( 1) = -3.866 MACH = 1.3944 Q = 599.11 P = 440.18 RN/L = 2.9098

SECTION ( 1)BODY FLAP LOWER DEPENDENT VARIABLE CP

| X/LB | 1.0180 | 1.0460 |
|---|---|---|
| PHI | | |
| .000 | .2457 | .2445 |
| 40.000 | .1467 | .0937 |

AMES 11-073(OA148) -140A/B/C/R ORB BODY FLAP LWR (XE8G33)

ALPHA ( 2) = -.046 BETA ( 2) = .181 MACH = 1.3944 Q = 599.11 P = 440.18 RN/L = 2.9098

SECTION ( 1)BODY FLAP LOWER DEPENDENT VARIABLE CP

| X/LB | 1.0180 | 1.0460 |
|---|---|---|
| PHI | | |
| .000 | .2593 | .2548 |
| 40.000 | .1459 | .1052 |

ALPHA ( 2) = -.050 BETA ( 3) = 4.256 MACH = 1.3944 Q = 599.11 P = 440.18 RN/L = 2.9098

SECTION ( 1)BODY FLAP LOWER DEPENDENT VARIABLE CP

| X/LB | 1.0180 | 1.0460 |
|---|---|---|
| PHI | | |
| .000 | .2509 | .2409 |
| 40.000 | .1445 | .1066 |

ALPHA ( 3) = 3.895 BETA ( 1) = -3.869 MACH = 1.3948 Q = 599.42 P = 440.18 RN/L = 2.9147

SECTION ( 1)BODY FLAP LOWER DEPENDENT VARIABLE CP

| X/LB | 1.0180 | 1.0460 |
|---|---|---|
| PHI | | |
| .000 | .3447 | .3291 |
| 40.000 | .2438 | .1769 |

ALPHA ( 3) = 3.895 BETA ( 2) = .190 MACH = 1.3948 Q = 599.42 P = 440.18 RN/L = 2.9147

SECTION ( 1)BODY FLAP LOWER DEPENDENT VARIABLE CP

| X/LB | 1.0180 | 1.0460 |
|---|---|---|
| PHI | | |
| .000 | .3523 | .3289 |
| 40.000 | .2310 | .1690 |

ALPHA ( 3) = 3.896 BETA ( 3) = 4.246 MACH = 1.3948 Q = 599.42 P = 440.18 RN/L = 2.9147

SECTION ( 1)BODY FLAP LOWER DEPENDENT VARIABLE CP

| X/LB | 1.0180 | 1.0460 |
|---|---|---|
| PHI | | |
| .000 | .3585 | .3379 |
| 40.000 | .2162 | .1791 |

AMES 11-073(OA148) -140A/B/C/R ORB BODY FLAP LWR (XEBG33)

ALPHA ( 4) = 7.947 BETA ( 1) = -3.865 MACH = 1.3944 Q = 599.72 P = 440.65 RN/L = 2.9146

SECTION ( 1)BODY FLAP LOWER DEPENDENT VARIABLE CP

| X/LB | 1.0180 | 1.0460 |
|---|---|---|
| PHI | | |
| .000 | .4531 | .4135 |
| 40.000 | .3335 | .2526 |

ALPHA ( 4) = 7.946 BETA ( 2) = .185 MACH = 1.3944 Q = 599.72 P = 440.65 RN/L = 2.9146

SECTION ( 1)BODY FLAP LOWER DEPENDENT VARIABLE CP

| X/LB | 1.0180 | 1.0460 |
|---|---|---|
| PHI | | |
| .000 | .4575 | .4019 |
| 40.000 | .3175 | .2555 |

ALPHA ( 4) = 7.944 BETA ( 3) = 4.238 MACH = 1.3944 Q = 599.72 P = 440.65 RN/L = 2.9146

SECTION ( 1)BODY FLAP LOWER DEPENDENT VARIABLE CP

| X/LB | 1.0180 | 1.0460 |
|---|---|---|
| PHI | | |
| .000 | .4705 | .4165 |
| 40.000 | .3109 | .2611 |

ALPHA ( 5) = 11.859 BETA ( 1) = -3.851 MACH = 1.3955 Q = 599.73 P = 439.94 RN/L = 2.9121

SECTION ( 1)BODY FLAP LOWER DEPENDENT VARIABLE CP

| X/LB | 1.0180 | 1.0460 |
|---|---|---|
| PHI | | |
| .000 | .5668 | .4821 |
| 40.000 | .4136 | .3080 |

ALPHA ( 5) = 11.865 BETA ( 2) = .189 MACH = 1.3955 Q = 599.73 P = 439.94 RN/L = 2.9121

SECTION ( 1)BODY FLAP LOWER DEPENDENT VARIABLE CP

| X/LB | 1.0180 | 1.0460 |
|---|---|---|
| PHI | | |
| .000 | .5574 | .4722 |
| 40.000 | .4073 | .3204 |

AMES 11-073(OA148) -140A/B/C/R ORB BODY FLAP LWR (XEBG33)

ALPHA ( 5) = 11.860 BETA ( 3) = 4.253 MACH = 1.3955 Q = 599.73 P = 439.94 RN/L = 2.9121

SECTION ( 1)BODY FLAP LOWER DEPENDENT VARIABLE CP

| X/LB | 1.0180 | 1.0460 |
|---|---|---|
| PHI | | |
| .000 | .5712 | .4755 |
| 40.000 | .4045 | .3343 |

ALPHA ( 6) = 15.849 BETA ( 1) = -3.830 MACH = 1.3950 Q = 599.93 P = 440.41 RN/L = 2.9147

SECTION ( 1)BODY FLAP LOWER DEPENDENT VARIABLE CP

| X/LB | 1.0180 | 1.0460 |
|---|---|---|
| PHI | | |
| .000 | 6701 | .5385 |
| 40.000 | .4912 | .3697 |

ALPHA ( 6) = 15.859 BETA ( 2) = .186 MACH = 1.3950 Q = 599.93 P = 440.41 RN/L = 2.9147

SECTION ( 1)BODY FLAP LOWER DEPENDENT VARIABLE CP

| X/LB | 1.0180 | 1.0460 |
|---|---|---|
| PHI | | |
| .000 | .6679 | .5315 |
| 40.000 | .4982 | .3850 |

ALPHA ( 6) = 15.851 BETA ( 3) = 4.283 MACH = 1.3950 Q = 599.93 P = 440.41 RN/L = 2.9147

SECTION ( 1)BODY FLAP LOWER DEPENDENT VARIABLE CP

| X/LB | 1.0180 | 1.0460 |
|---|---|---|
| PHI | | |
| .000 | .6709 | .5326 |
| 40.000 | .5017 | .3924 |

ORIGINAL PAGE IS OF POOR QUALITY

AMES 11-073(OA148) -140A/B/C/R ORB BODY FLAP LWR (XEBG34) ( 05 AUG 75 )

REFERENCE DATA

SREF = 2690.0000 SQ.FT. XMRP = 1076.6800 IN. XO
LREF = 474.9000 IN. YMRP = .0000 IN. YO
BREF = 936.0680 IN. ZMRP = 375.0000 IN. ZO
SCALE = .0300

PARAMETRIC DATA

RUDDER = 10.000 SPDBRK = 35.000
BDFLAP = 16.300 L-ELVN = .000
R-ELVN = 10.000 MACH = 1.250

ALPHA ( 1) = -4.064 BETA ( 1) = -3.845 MACH = 1.2480 Q = 600.05 P = 550.40 RN/L = 3.0174

SECTION ( 1)BODY FLAP LOWER DEPENDENT VARIABLE CP

| X/LB | 1.0180 | 1.0460 |
|---|---|---|
| PHI | | |
| .000 | .2245 | .2054 |
| 40.000 | .0381 | .0190 |

ALPHA ( 1) = -4.041 BETA ( 2) = .192 MACH = 1.2480 Q = 600.05 P = 550.40 RN/L = 3.0174

SECTION ( 1)BODY FLAP LOWER DEPENDENT VARIABLE CP

| X/LB | 1.0180 | 1.0460 |
|---|---|---|
| PHI | | |
| .000 | .2243 | .2161 |
| 40.000 | .0727 | .0491 |

ALPHA ( 1) = -4.051 BETA ( 3) = 4.275 MACH = 1.2480 Q = 600.05 P = 550.40 RN/L = 3.0174

SECTION ( 1)BODY FLAP LOWER DEPENDENT VARIABLE CP

| X/LB | 1.0180 | 1.0460 |
|---|---|---|
| PHI | | |
| .000 | .2302 | .1892 |
| 40.000 | .0865 | .0629 |

ALPHA ( 2) = -.032 BETA ( 1) = -3.867 MACH = 1.2476 Q = 600.19 P = 550.87 RN/L = 3.0137

SECTION ( 1)BODY FLAP LOWER DEPENDENT VARIABLE CP

| X/LB | 1.0180 | 1.0460 |
|---|---|---|
| PHI | | |
| .000 | .2812 | .2400 |
| 40.000 | .1531 | .1081 |

AMES 11-073(OA148) -140A/B/C/R ORB BODY FLAP LWR (XEBG34)

ALPHA ( 2) = -.029 BETA ( 2) = .184 MACH = 1.2476 Q = 600.19 P = 550.87 RN/L = 3.0137

SECTION ( 1)BODY FLAP LOWER DEPENDENT VARIABLE CP

| X/LB | 1.0180 | 1.0460 |
|---|---|---|
| PHI | | |
| .000 | .3013 | .2552 |
| 40.000 | .1384 | .0997 |

ALPHA ( 2) = -.035 BETA ( 3) = 4.251 MACH = 1.2476 Q = 600.19 P = 550.87 RN/L = 3.0137

SECTION ( 1)BODY FLAP LOWER DEPENDENT VARIABLE CP

| X/LB | 1.0180 | 1.0460 |
|---|---|---|
| PHI | | |
| .000 | .2751 | .2409 |
| 40.000 | .1511 | .1006 |

ALPHA ( 3) = 3.925 BETA ( 1) = -3.871 MACH = 1.2463 Q = 599.48 P = 551.33 RN/L = 3.0145

SECTION ( 1)BODY FLAP LOWER DEPENDENT VARIABLE CP

| X/LB | 1.0180 | 1.0460 |
|---|---|---|
| PHI | | |
| .000 | .3852 | .3189 |
| 40.000 | .2540 | .1838 |

ALPHA ( 3) = 3.924 BETA ( 2) = .180 MACH = 1.2463 Q = 599.48 P = 551.33 RN/L = 3.0145

SECTION ( 1)BODY FLAP LOWER DEPENDENT VARIABLE CP

| X/LB | 1.0180 | 1.0460 |
|---|---|---|
| PHI | | |
| .000 | .3930 | .3164 |
| 40.000 | .2298 | .1628 |

ALPHA ( 3) = 3.934 BETA ( 3) = 4.244 MACH = 1.2463 Q = 599.48 P = 551.33 RN/L = 3.0145

SECTION ( 1)BODY FLAP LOWER DEPENDENT VARIABLE CP

| X/LB | 1.0180 | 1.0460 |
|---|---|---|
| PHI | | |
| .000 | .3991 | .3210 |
| 40.000 | .2335 | .1622 |

AMES 11-073(OA148) -140A/B/C/R ORB BODY FLAP LWR (XE8G34)

ALPHA ( 4) = 7.989 BETA ( 1) = -3.866 MACH = 1.2474 Q = 600.07 P = 550.87 RN/L = 3.0135

SECTION ( 1)BODY FLAP LOWER DEPENDENT VARIABLE CP

| X/LB | 1.0180 | 1.0460 |
|---|---|---|
| PHI | | |
| .000 | .4935 | .3807 |
| 40.000 | .3304 | .2321 |

ALPHA ( 4) = 7.987 BETA ( 2) = .186 MACH = 1.2474 Q = 600.07 P = 550.87 RN/L = 3.0135

SECTION ( 1)BODY FLAP LOWER DEPENDENT VARIABLE CP

| X/LB | 1.0180 | 1.0460 |
|---|---|---|
| PHI | | |
| .000 | .4932 | .3769 |
| 40.000 | .3311 | .2295 |

ALPHA ( 4) = 7.988 BETA ( 3) = 4.237 MACH = 1.2474 Q = 600.07 P = 550.87 RN/L = 3.0135

SECTION ( 1)BODY FLAP LOWER DEPENDENT VARIABLE CP

| X/LB | 1.0180 | 1.0460 |
|---|---|---|
| PHI | | |
| .000 | .4914 | .3845 |
| 40.000 | .3333 | .2289 |

ALPHA ( 5) = 11.921 BETA ( 1) = -3.850 MACH = 1.2455 Q = 599.75 P = 552.28 RN/L = 3.0144

SECTION ( 1)BODY FLAP LOWER DEPENDENT VARIABLE CP

| X/LB | 1.0180 | 1.0460 |
|---|---|---|
| PHI | | |
| .000 | .5849 | .4315 |
| 40.000 | .4073 | .2787 |

ALPHA ( 5) = 11.932 BETA ( 2) = .189 MACH = 1.2455 Q = 599.75 P = 552.28 RN/L = 3.0144

SECTION ( 1)BODY FLAP LOWER DEPENDENT VARIABLE CP

| X/LB | 1.0180 | 1.0460 |
|---|---|---|
| PHI | | |
| .000 | .5798 | .4248 |
| 40.000 | .4194 | .2710 |

AMES 11-073(OA148) -140A/B/C/R ORB BODY FLAP LWR (XE8634)

ALPHA ( 5) = 11.924 BETA ( 3) = 4.253 MACH = 1.2455 Q = 599.75 P = 552.28 RN/L = 3.0144

SECTION ( 1)BODY FLAP LOWER DEPENDENT VARIABLE CP

| X/LB | 1.0180 | 1.0460 |
|---|---|---|
| PHI | | |
| .000 | .5775 | .4249 |
| 40.000 | .4140 | .2702 |

AMES 11-073(OA148) -140A/B/C/R ORB BODY FLAP LWR (XEBC35) ( 05 AUG 75 )

REFERENCE DATA

SREF = 2693.0000 SQ.FT. XMRP = 1076.6800 IN. XO
LREF = 474.6000 IN. YMRP = .0000 IN. YO
BREF = 936.0590 IN. ZMRP = 375.0000 IN. ZO
SCALE = .0300

PARAMETRIC DATA

RUDDER = 10.000 SPDBRK = 35.000
BDFLAP = 16.300 L-ELVN = .000
R-ELVN = 10.000 MACH = 1.100

ALPHA ( 1) = -4.064 BETA ( 1) = -3.846 MACH = 1.1012 Q = 599.90 P = 706.74 RN/L = 3.1771

SECTION ( 1)BODY FLAP LOWER DEPENDENT VARIABLE CP

| X/LB | 1.0180 | 1.0460 |
|---|---|---|
| PHI | | |
| .000 | .2916 | .2184 |
| 40.000 | .0725 | .0824 |

ALPHA ( 1) = -4.062 BETA ( 2) = .195 MACH = 1.1012 Q = 599.90 P = 706.74 RN/L = 3.1771

SECTION ( 1)BODY FLAP LOWER DEPENDENT VARIABLE CP

| X/LB | 1.0180 | 1.0460 |
|---|---|---|
| PHI | | |
| .000 | .2984 | .2303 |
| 40.000 | .1222 | .1004 |

ALPHA ( 1) = -4.062 BETA ( 3) = 4.274 MACH = 1.1012 Q = 599.90 P = 706.74 RN/L = 3.1771

SECTION ( 1)BODY FLAP LOWER DEPENDENT VARIABLE CP

| X/LB | 1.0180 | 1.0460 |
|---|---|---|
| PHI | | |
| .000 | .2648 | .1915 |
| 40.000 | .1173 | .0848 |

ALPHA ( 2) = -.023 BETA ( 1) = -3.863 MACH = 1.0993 Q = 599.08 P = 708.12 RN/L = 3.1793

SECTION ( 1)BODY FLAP LOWER DEPENDENT VARIABLE CP

| X/LB | 1.0180 | 1.0460 |
|---|---|---|
| PHI | | |
| .000 | .3277 | .2319 |
| 40.000 | .2081 | .1400 |

AMES 11-073(OA148) -140 PB BODY FLAP LWR (XEBG35)

ALPHA ( 2) = -.020 BETA ( 2) = .185 MACH = 1. = 599.0 P = 708.12 RN/L = 3.1793

SECTION ( 1)BODY FLAP LOWER DEPENDENT VARIABLE

| X/LB | 1.0180 | 1.0460 |
|---|---|---|
| PHI | | |
| .000 | .3612 | .2479 |
| -0.000 | .2025 | .1328 |

ALPHA ( 2) = -.024 BETA ( 3) = 4.249 MACH = Q = 599.08 P = 708.12 RN/L = 3.1793

SECTION ( 1)BODY FLAP LOWER DEPENDENT VARIABLE CP

| X/LB | 1.0180 | 1.0460 |
|---|---|---|
| PHI | | |
| .000 | .3085 | .2192 |
| 40.000 | .1910 | .0920 |

ALPHA ( 3) = 3.952 BETA ( 1) = -3.863 MACH = 1.0983 Q = 598.70 P = 709.06 RN/L = 3.1785

SECTION ( 1)BODY FLAP LOWER DEPENDENT VARIABLE CP

| X/LB | 1.0180 | 1.0460 |
|---|---|---|
| PHI | | |
| .000 | .4107 | .2744 |
| 40.000 | .2780 | .1656 |

ALPHA ( 3) = 3.952 BETA ( 2) = .189 MACH = 1.0983 Q = 598.70 P = 709.06 RN/L = 3.1785

SECTION ( 1)BODY FLAP LOWER DEPENDENT VARIABLE CP

| X/LB | 1.0180 | 1.0460 |
|---|---|---|
| PHI | | |
| .000 | .4204 | .2743 |
| 40.000 | .2755 | .1429 |

ALPHA ( 3) = 3.960 BETA ( 3) = 4.243 MACH = 1.0983 Q = 598.70 P = 709.06 RN/L = 3.1785

SECTION ( 1)BODY FLAP LOWER DEPENDENT VARIABLE CP

| X/LB | 1.0180 | 1.0460 |
|---|---|---|
| PHI | | |
| .000 | .4043 | .2670 |
| 40.000 | .2530 | .1161 |

ORIGINAL PAGE IS OF POOR QUALITY

AMES 11-073(OA148) -140A/B/C/R ORB BODY FLAP LWR (XEBG35)

ALPHA ( 4) = 8.030 BETA ( 1) = -3.862 MACH = 1.0987 Q = 598.57 P = 708.35 RN/L = 3.1769

SECTION ( 1)BODY FLAP LOWER DEPENDENT VARIABLE CP

| X/LB | 1.0180 | 1.0460 |
|---|---|---|
| PHI | | |
| .000 | .4955 | .3097 |
| 40.000 | .3441 | .1735 |

ALPHA ( 4) = 8.038 BETA ( 2) = .183 MACH = 1.0987 Q = 598.57 P = 708.35 RN/L = 3.1769

SECTION ( 1)BODY FLAP LOWER DEPENDENT VARIABLE CP

| X/LB | 1.0180 | 1.0460 |
|---|---|---|
| PHI | | |
| .000 | .4995 | .3109 |
| 40.000 | .3415 | .1617 |

ALPHA ( 4) = 8.037 BETA ( 3) = 4.237 MACH = 1.0987 Q = 598.57 P = 708.35 RN/L = 3.1769

SECTION ( 1)BODY FLAP LOWER DEPENDENT VARIABLE CP

| X/LB | 1.0180 | 1.0460 |
|---|---|---|
| PHI | | |
| .000 | .4925 | .3049 |
| 40.000 | .3250 | .1442 |

ALPHA ( 5) = 11.975 BETA ( 1) = -3.842 MACH = 1.0987 Q = 599.75 P = 708.59 RN/L = 3.1753

SECTION ( 1)BODY FLAP LOWER DEPENDENT VARIABLE CP

| X/LB | 1.0180 | 1.0460 |
|---|---|---|
| PHI | | |
| .000 | .5594 | .3374 |
| 40.000 | .4058 | .1883 |

ALPHA ( 5) = 11.985 BETA ( 2) = .188 MACH = 1.0987 Q = 598.75 P = 708.59 RN/L = 3.1753

SECTION ( 1)BODY FLAP LOWER DEPENDENT VARIABLE CP

| X/LB | 1.0180 | 1.0460 |
|---|---|---|
| PHI | | |
| .000 | .5624 | .3381 |
| 40.000 | .4009 | .1919 |

AMES 11-073(OA148) -140A/B/C/R ORB BODY FLAP LWR (XE8G35)

ALPHA ( 5) = 11.981 BETA ( 3) = 4.246 MACH = 1.0987 Q = 598.75 P = 708.59 RN/L = 3.1753

SECTION ( 1)BODY FLAP LOWER DEPENDENT VARIABLE CP

| X/LB | 1.0180 | 1.0460 |
|---|---|---|
| PHI | | |
| .000 | .5572 | .3337 |
| 40.000 | .3763 | .1641 |

AMES 11-073(OA148) -140A/B/C/R ORB BODY FLAP LWR (XE8G36) ( 05 AUG 75 )

REFERENCE DATA

SREF = 2690.0000 SQ.FT. XMRP = 1076.6800 IN. XO
LREF = 474.0000 IN. YMRP = .0000 IN. YO
BREF = 936.0680 IN. ZMRP = 375.0000 IN. ZO
SCALE = .0300

PARAMETRIC DATA

RUDDER = 10.000 SPDBRK = 35.000
BDFLAP = 16.300 L-ELVN = .000
R-ELVN = 10.000 MACH = .900

ALPHA ( 1) = -4.063 BETA ( 1) = -3.844 MACH = .90163 Q = 601.33 P = 1056.6 RN/L = 3.5806

SECTION ( 1)BODY FLAP LOWER DEPENDENT VARIABLE CP

| X/LB | 1.0180 | 1.0460 |
|---|---|---|
| PHI | | |
| .000 | .3192 | .1056 |
| 40.000 | .1588 | .0151 |

ALPHA ( 1) = -4.055 BETA ( 2) = .194 MACH = .90163 Q = 601.33 P = 1056.6 RN/L = 3.5806

SECTION ( 1)BODY FLAP LOWER DEPENDENT VARIABLE CP

| X/LB | 1.0180 | 1.0460 |
|---|---|---|
| PHI | | |
| .000 | .3340 | .1220 |
| 40.000 | .1702 | .0307 |

ALPHA ( 1) = -4.060 BETA ( 3) = 4.272 MACH = .90163 Q = 601.33 P = 1056.6 RN/L = 3.5806

SECTION ( 1)BODY FLAP LOWER DEPENDENT VARIABLE CP

| X/LB | 1.0180 | 1.0460 |
|---|---|---|
| PHI | | |
| .000 | .2915 | .1074 |
| 40.000 | .1943 | .0111 |

ALPHA ( 2) = .042 BETA ( 1) = -3.866 MACH = .90027 Q = 600.16 P = 1057.8 RN/L = 3.5774

SECTION ( 1)BODY FLAP LOWER DEPENDENT VARIABLE CP

| X/LB | 1.0180 | 1.0460 |
|---|---|---|
| PHI | | |
| .000 | .3048 | .1053 |
| 40.000 | .2001 | .0391 |

AMES 11-073(OA148) -140A/B/C/R ORB BODY FLAP LWR (XE8G3B)

ALPHA ( 2) = .092 BETA ( 2) = .183 MACH = .90027 Q = 600.16 P = 1057.8 RN/L = 3.5774

SECTION ( 1)BODY FLAP LOWER DEPENDENT VARIABLE CP

| X/LB | 1.0180 | 1.0460 |
|---|---|---|
| PHI | | |
| .000 | .3284 | .1111 |
| 40.000 | .1968 | .0268 |

ALPHA ( 2) = .085 BETA ( 3) = 4.248 MACH = .90027 Q = 600.16 P = 1057.8 RN/L = 3.5774

SECTION ( 1)BODY FLAP LOWER DEPENDENT VARIABLE CP

| X/LB | 1.0180 | 1.0460 |
|---|---|---|
| PHI | | |
| .000 | .3134 | .1085 |
| 40.000 | .1866 | .0018 |

ALPHA ( 3) = 3.973 BETA ( 1) = -3.873 MACH = .89927 Q = 599.24 P = 1058.5 RN/L = 3.5740

SECTION ( 1)BODY FLAP LOWER DEPENDENT VARIABLE CP

| X/LB | 1.0180 | 1.0460 |
|---|---|---|
| PHI | | |
| .000 | .3563 | .1233 |
| 40.000 | .2379 | .0507 |

ALPHA 3) = 3.981 BETA ( 2) = .185 MACH = .89927 Q = 599.24 P = 1058.5 RN/L = 3.5740

SECTION ( 1)BODY FLAP LOWER DEPENDENT VARIABLE CP

| X/LB | 1.0180 | 1.0460 |
|---|---|---|
| PHI | | |
| .000 | .3585 | .1200 |
| 40.000 | .2253 | .0313 |

ALPHA ( 3) = 3.986 BETA ( 3) = 4.242 MACH = .89927 Q = 599.24 P = 1058.5 RN/L = 3.5740

SECTION ( 1)BODY FLAP LOWER DEPENDENT VARIABLE CP

| X/LB | 1.0180 | 1.0460 |
|---|---|---|
| PHI | | |
| .000 | .3525 | .1203 |
| 40.000 | .2042 | .0065 |

AMES 11-073(OA148) -140A/B/C/R ORB BODY FLAP LWR (XE8G38)

ALPHA ( 4) = 8.050 BETA ( 1) = -3.862 MACH = .89970 Q = 599.92 P = 1058.7 RN/L = 3.5781

SECTION ( 1)BODY FLAP LOWER DEPENDENT VARIABLE CP

| X/LB | 1.0180 | 1.0460 |
|---|---|---|
| PHI | | |
| .000 | .3988 | .1336 |
| 40.000 | .2676 | .0542 |

ALPHA ( 4) = 8.064 BETA ( 2) = .184 MACH = .89970 Q = 599.92 P = 1058.7 RN/L = 3.5781

SECTION ( 1)BODY FLAP LOWER DEPENDENT VARIABLE CP

| X/LB | 1.0180 | 1.0460 |
|---|---|---|
| PHI | | |
| .000 | .3957 | .1309 |
| 40.000 | .2465 | .0311 |

ALPHA ( 4) = 8.061 BETA ( 3) = 4.239 MACH = .89970 Q = 599.92 P = 1058.7 RN/L = 3.5781

SECTION ( 1)BODY FLAP LOWER DEPENDENT VARIABLE CP

| X/LB | 1.0180 | 1.0460 |
|---|---|---|
| PHI | | |
| .000 | .3967 | .1274 |
| 40.000 | .2270 | .0090 |

ALPHA ( 5) = 11.931 BETA ( 1) = -3.854 MACH = .89977 Q = 600.28 P = 1059.2 RN/L = 3.5829

SECTION ( 1)BODY FLAP LOWER DEPENDENT VARIABLE CP

| X/LB | 1.0180 | 1.0460 |
|---|---|---|
| PHI | | |
| .000 | .4257 | .1401 |
| 40.000 | .2770 | .0318 |

ALPHA ( 5) = 11.945 BETA ( 2) = .188 MACH = .89977 Q = 600.28 P = 1059.2 RN/L = 3.5829

SECTION ( 1)BODY FLAP LOWER DEPENDENT VARIABLE CP

| X/LB | 1.0180 | 1.0460 |
|---|---|---|
| PHI | | |
| .000 | .4225 | .1412 |
| 40.000 | .2623 | .0150 |

AMES 11-073(OA148) -140A/B/C/R ORB BODY FLAP LWR (XE8G36)

ALPHA ( 5) = 11.935 BETA ( 3) = 4.259 MACH = .89977 Q = 600.28 P = 1059.2 RN/L = 3.5829

SECTION ( 1)BODY FLAP LOWER DEPENDENT VARIABLE CP

| X/LB | 1.0180 | 1.0460 |
|---|---|---|
| PHI | | |
| .000 | .4229 | .1382 |
| 40.000 | .2456 | .0016 |

ORIGINAL PAGE IS
OF POOR QUALITY

AMES 11-073(OA148) -140A/B/C/R ORB BODY FLAP LWR (XEBG37) ( 05 AUG 75 )

REFERENCE DATA

SREF = 2690.0000 SQ.FT. XMRP = 1076.6800 IN. XO
LREF = 474.8000 IN. YMRP = .0000 IN. YO
BREF = 936.0680 IN. ZMRP = 375.0000 IN. ZO
SCALE = .0300

PARAMETRIC DATA

RUDDER = 10.000 SPDBRK = 35.000
BDFLAP = 16.300 L-ELVN = .000
R-ELVN = 10.000 MACH = .600

ALPHA ( I ) = -4.041 BETA ( 1 ) = -7.848 MACH = .59694 Q = 595.14 P = 2385.8 RN/L = 4.8726

SECTION ( 1)BODY FLAP LOWER DEPENDENT VARIABLE CP

| X/LB | 1.0180 | 1.0460 |
|---|---|---|
| PHI | | |
| .000 | .2346 | .0112 |
| 40.000 | .1540 | -.0165 |

ALPHA ( I ) = -4.025 BETA ( 2 ) = -3.846 MACH = .59694 Q = 595.14 P = 2385.8 RN/L = 4.8726

SECTION ( 1)BODY FLAP LOWER DEPENDENT VARIABLE CP

| X/LB | 1.0180 | 1.0460 |
|---|---|---|
| PHI | | |
| .000 | .2504 | .0192 |
| 40.000 | .1493 | -.0328 |

ALPHA ( I ) = -3.896 BETA ( 3 ) = .184 MACH = .59694 Q = 595.14 P = 2385.8 RN/L = 4.8726

SECTION ( 1)BODY FLAP LOWER DEPENDENT VARIABLE CP

| X/LB | 1.0180 | 1.0460 |
|---|---|---|
| PHI | | |
| .000 | .2601 | .0244 |
| 40.000 | .1293 | -.0394 |

ALPHA ( I ) = -3.930 BETA ( 4 ) = 4.266 MACH = .59694 Q = 595.14 P = 2385.8 RN/L = 4.8726

SECTION ( 1)BODY FLAP LOWER DEPENDENT VARIABLE CP

| X/LB | 1.0180 | 1.0460 |
|---|---|---|
| PHI | | |
| .000 | .2332 | .0060 |
| 40.000 | .1300 | -.0612 |

AMES 11-073(OA148) -140A/B/C/R ORB BODY FLAP LWR (XE0037)

ALPHA ( 1) = -3.946 BETA ( 5) = 8.339 MACH = .59694 Q = 595.14 P = 2385.8 RN/L = 4.8726

SECTION ( 1)BODY FLAP LOWER DEPENDENT VARIABLE CP

| X/LB | 1.0180 | 1.0460 |
|---|---|---|
| PHI | | |
| .000 | .2272 | .0023 |
| 40.000 | .1048 | -.0807 |

ALPHA ( 2) = .030 BETA ( 1) = -7.898 MACH = .59652 Q = 594.31 P = 2385.8 RN/L = 4.8794

SECTION ( 1)BODY FLAP LOWER DEPENDENT VARIABLE CP

| X/LB | 1.0180 | 1.0460 |
|---|---|---|
| PHI | | |
| .000 | .2710 | .0224 |
| 40.000 | .1832 | -.0054 |

ALPHA ( 2) = .040 BETA ( 2) = -3.863 MACH = .59652 Q = 594.31 P = 2385.8 RN/L = 4.8794

SECTION ( 1)BODY FLAP LOWER DEPENDENT VARIABLE CP

| X/LB | 1.0180 | 1.0460 |
|---|---|---|
| PHI | | |
| .000 | .2556 | .0154 |
| 40.000 | .1734 | -.0144 |

ALPHA ( 2) = .104 BETA ( 3) = .181 MACH = .59652 Q = 594.31 P = 2385.8 RN/L = 4.8794

SECTION ( 1)BODY FLAP LOWER DEPENDENT VARIABLE CP

| X/LB | 1.0180 | 1.0460 |
|---|---|---|
| PHI | | |
| .000 | .2564 | .0153 |
| 40.000 | .1483 | -.0404 |

ALPHA ( 2) = .102 BETA ( 4) = 4.244 MACH = .59652 Q = 594.31 P = 2385.8 RN/L = 4.8794

SECTION ( 1)BODY FLAP LOWER DEPENDENT VARIABLE CP

| X/LB | 1.0180 | 1.0460 |
|---|---|---|
| PHI | | |
| .000 | .2528 | .0191 |
| 40.000 | .1248 | -.0558 |

AMES 11-073(OA148) -140A/B/C/R ORB BODY FLAP LWR (XEBG37)

ALPHA ( 2) = .019 BETA ( 5) = 8.303 MACH = .59652 Q = 594.31 P = 2385.8 RN/L = 4.8794

SECTION ( 1)BODY FLAP LOWER DEPENDENT VARIABLE CP

| X/LB | 1.0180 | 1.0460 |
|---|---|---|
| PHI | | |
| .000 | .2603 | .0200 |
| 40.000 | .1112 | -.0722 |

ALPHA ( 3) = 4.036 BETA ( 1) = -7.909 MACH = .59620 Q = 593.73 P = 2386.0 RN/L = 4.8840

SECTION ( 1)BODY FLAP LOWER DEPENDENT VARIABLE CP

| X/LB | 1.0180 | 1.0460 |
|---|---|---|
| PHI | | |
| .000 | .2950 | .0267 |
| 40.000 | .1994 | .0073 |

ALPHA ( 3) = 4.041 BETA ( 2) = -3.867 MACH = .59620 Q = 593.73 P = 2386.0 RN/L = 4.8840

SECTION ( 1)BODY FLAP LOWER DEPENDENT VARIABLE CP

| X/LB | 1.0180 | 1.0460 |
|---|---|---|
| PHI | | |
| .000 | .2809 | .0200 |
| 40.000 | .1922 | -.0145 |

ALPHA ( 3) = 4.040 BETA ( 3) = .186 MACH = .59620 Q = 593.73 P = 2386.0 RN/L = 4.8840

SECTION ( 1)BODY FLAP LOWER DEPENDENT VARIABLE CP

| X/LB | 1.0180 | 1.0460 |
|---|---|---|
| PHI | | |
| .000 | .2767 | .0184 |
| 40.000 | .1699 | -.0288 |

ALPHA ( 3) = 4.044 BETA ( 4) = 4.237 MACH = .59620 Q = 593.73 P = 2386.0 RN/L = 4.8840

SECTION ( 1)BODY FLAP LOWER DEPENDENT VARIABLE CP

| X/LB | 1.0180 | 1.0460 |
|---|---|---|
| PHI | | |
| .000 | .2796 | .0214 |
| 40.000 | .1441 | -.0444 |

AMES 11-073(OA148) -140A/B/C/R ORB BODY FLAP LWR (XEBG37)

ALPHA ( 3) = 4.049 BETA ( 5) = 8.284 MACH = .59620 Q = 593.73 P = 2386.0 RN/L = 4.8840

SECTION ( 1)BODY FLAP LOWER DEPENDENT VARIABLE CP

| X/LB | 1.0180 | 1.0460 |
|---|---|---|
| PHI | | |
| .000 | .2879 | .0251 |
| 40.000 | .1335 | -.0572 |

ALPHA ( 4) = 7.972 BETA ( 1) = -7.894 MACH = .59666 Q = 594.55 P = 2385.8 RN/L = 4.8889

SECTION ( 1)BODY FLAP LOWER DEPENDENT VARIABLE CP

| X/LB | 1.0180 | 1.0460 |
|---|---|---|
| PHI | | |
| .000 | .3139 | .0359 |
| 40.000 | .2153 | .0099 |

ALPHA ( 4) = 7.984 BETA ( 2) = -3.864 MACH = .59666 Q = 594.55 P = 2385.8 RN/L = 4.8889

SECTION ( 1)BODY FLAP LOWER DEPENDENT VARIABLE CP

| X/LB | 1.0180 | 1.0460 |
|---|---|---|
| PHI | | |
| .000 | .3059 | .0402 |
| 40.000 | .2022 | -.0068 |

ALPHA ( 4) = 7.990 BETA ( 3) = .171 MACH = .59666 Q = 594.55 P = 2385.8 RN/L = 4.8889

SECTION ( 1)BODY FLAP LOWER DEPENDENT VARIABLE CP

| X/LB | 1.0180 | 1.0460 |
|---|---|---|
| PHI | | |
| .000 | .3043 | .0381 |
| 40.000 | .1880 | -.0143 |

ALPHA ( 4) = 7.990 BETA ( 4) = 4.234 MACH = .59666 Q = 594.55 P = 2385.8 RN/L = 4.8889

SECTION ( 1)BODY FLAP LOWER DEPENDENT VARIABLE CP

| X/LB | 1.0180 | 1.0460 |
|---|---|---|
| PHI | | |
| .000 | .3084 | .0377 |
| 40.000 | .1718 | -.0247 |

AMES 11-073(OA148) -140A/B/C/R ORB BODY FLAP LWR (XEBG37)

ALPHA ( 4) = 7.988 BETA ( 5) = 8.289 MACH = .59656 Q = 594.55 P = 2385.8 RN/L = 4.8889

SECTION ( 1)BODY FLAP LOWER DEPENDENT VARIABLE CP

| X/LB | 1.0180 | 1.0460 |
|---|---|---|
| PHI | | |
| .000 | .3061 | .0315 |
| 40.000 | .1530 | -.0508 |

ALPHA ( 5) = 11.959 BETA ( 1) = -7.860 MACH = .59676 Q = 594.79 P = 2385.8 RN/L = 4.8888

SECTION ( 1)BODY FLAP LOWER DEPENDENT VARIABLE CP

| X/LB | 1.0180 | 1.0460 |
|---|---|---|
| PHI | | |
| .000 | .3353 | .0565 |
| 40.000 | .2214 | .0002 |

ALPHA ( 5) = 11.981 BETA ( 2) = -3.946 MACH = .59676 Q = 594.79 P = 2385.8 RN/L = 4.8888

SECTION ( 1)BODY FLAP LOWER DEPENDENT VARIABLE CP

| X/LB | 1.0180 | 1.0460 |
|---|---|---|
| PHI | | |
| .000 | .3330 | .0569 |
| 40.000 | .2128 | -.0015 |

ALPHA ( 5) = 11.991 BETA ( 3) = .172 MACH = .59676 Q = 594.79 P = 2385.8 RN/L = 4.8888

SECTION ( 1)BODY FLAP LOWER DEPENDENT VARIABLE CP

| X/LB | 1.0180 | 1.0460 |
|---|---|---|
| PHI | | |
| .000 | .3330 | .0537 |
| 40.000 | .2027 | -.0118 |

ALPHA ( 5) = 11.985 BETA ( 4) = 4.243 MACH = .59676 Q = 594.79 P = 2385.8 RN/L = 4.8888

SECTION ( 1)BODY FLAP LOWER DEPENDENT VARIABLE CP

| X/LB | 1.0180 | 1.0460 |
|---|---|---|
| PHI | | |
| .000 | .3289 | .0465 |
| 40.000 | .1812 | -.0233 |

AMES 11-073(OA148) -140A/B/C/R ORB BODY FLAP LWR (XEB037)

ALPHA ( 5) = 11.975 BETA ( 5) = 8.313 MACH = .59676 Q = 594.79 P = 2385.8 RN/L = 4.8888

SECTION ( 1)BODY FLAP LOWER DEPENDENT VARIABLE CP

| X/LB | 1.0180 | 1.0460 |
|---|---|---|
| PHI | | |
| .000 | .3277 | .0415 |
| 40.000 | .1742 | -.0418 |

AMES 11-073(OA148) -140A/B/C/R ORB BODY FLAP LWR (XEBG38) ( 05 AUG 75 )

REFERENCE DATA

SREF = 2690.0000 SQ.FT. XMRP = 1076.6800 IN. XO
LREF = 474.8000 IN. YMRP = .0000 IN. YO
BREF = 935.0690 IN. ZMRP = 375.0000 IN. ZO
SCALE = .0300

PARAMETRIC DATA

RUDDER = 10.000 SPDBRK = 85.000
BDFLAP = 16.300 L-ELVN = 10.000
R-ELVN = 10.000 MACH = 1.400

ALPHA ( 1) = -4.002 BETA ( 1) = -3.853 MACH = 1.3931 Q = 600.20 P = 441.83 RN/L = 2.9112

SECTION ( 1)BODY FLAP LOWER DEPENDENT VARIABLE CP

| X/LB | 1.0180 | 1.0460 |
|---|---|---|
| PHI | | |
| .000 | .1963 | .2176 |
| 40.000 | .1311 | .0938 |

ALPHA ( 1) = -3.940 BETA ( 2) = .193 MACH = 1.3931 Q = 600.20 P = 441.83 RN/L = 2.9112

SECTION ( 1)BODY FLAP LOWER DEPENDENT VARIABLE CP

| X/LB | 1.0180 | 1.0460 |
|---|---|---|
| PHI | | |
| .000 | .1935 | .2207 |
| 40.000 | .1236 | .0739 |

ALPHA ( 1) = -3.950 BETA ( 3) = 4.276 MACH = 1.3931 Q = 600.20 P = 441.83 RN/L = 2.9112

SECTION ( 1)BODY FLAP LOWER DEPENDENT VARIABLE CP

| X/LB | 1.0180 | 1.0460 |
|---|---|---|
| PHI | | |
| .000 | .1906 | .2107 |
| 40.000 | .1593 | .1020 |

ALPHA ( 2) = .030 BETA ( 1) = -3.869 MACH = 1.3931 Q = 599.59 P = 441.36 RN/L = 2.9073

SECTION ( 1)BODY FLAP LOWER DEPENDENT VARIABLE CP

| X/LB | 1.0180 | 1.0460 |
|---|---|---|
| PHI | | |
| .000 | .2500 | .2571 |
| 40.000 | .2349 | .1922 |

AMES 11-073(OA148) -140A/B/C/R ORB BODY FLAP LWR (XE8G38)

ALPHA ( 2) = .036 BETA ( 2) = .183 MACH = 1.3931 Q = 599.59 P = 441.36 RN/L = 2.9073

SECTION ( 1)BODY FLAP LOWER DEPENDENT VARIABLE CP

| X/LB | 1.0180 | 1.0460 |
|---|---|---|
| PHI | | |
| .000 | .2599 | .2684 |
| 40.000 | .2046 | .1469 |

ALPHA ( 2) = .034 BETA ( 3) = 4.255 MACH = 1.3931 Q = 599.59 P = 441.36 RN/L = 2.9073

SECTION ( 1)BODY FLAP LOWER DEPENDENT VARIABLE CP

| X/LB | 1.0180 | 1.0460 |
|---|---|---|
| PHI | | |
| .000 | .2535 | .2598 |
| 40.000 | .2083 | .1530 |

ALPHA ( 3) = 3.894 BETA ( 1) = -3.872 MACH = 1.3932 Q = 599.70 P = 441.36 RN/L = 2.9108

SECTION ( 1)BODY FLAP LOWER DEPENDENT VARIABLE CP

| X/LB | 1.0180 | 1.0460 |
|---|---|---|
| PHI | | |
| .000 | .3554 | .3468 |
| 40.000 | .3489 | .2652 |

ALPHA ( 3) = 3.895 BETA ( 2) = .183 MACH = 1.3932 Q = 599.70 P = 441.36 RN/L = 2.9108

SECTION ( 1)BODY FLAP LOWER DEPENDENT VARIABLE CP

| X/LB | 1.0180 | 1.0460 |
|---|---|---|
| PHI | | |
| .000 | .3544 | .3426 |
| 40.000 | .3064 | .2254 |

ALPHA ( 3) = 3.906 BETA ( 3) = 4.246 MACH = 1.3932 Q = 599.70 P = 441.36 RN/L = 2.9108

SECTION ( 1)BODY FLAP LOWER DEPENDENT VARIABLE CP

| X/LB | 1.0180 | 1.0460 |
|---|---|---|
| PHI | | |
| .000 | .3580 | .3502 |
| 40.000 | .2834 | .2207 |

AMES 11-073(OA148) -140A/B/C/R ORB BODY FLAP LWR (XE8038)

ALPHA ( 4) = 7.922 BETA ( 1) = -3.861 MACH = 1.3932 Q = 599.39 P = 441.12 RN/L = 2.9102

SECTION ( 1)BODY FLAP LOWER DEPENDENT VARIABLE CP

| X/LB | 1.0180 | 1.0460 |
|---|---|---|
| PHI | | |
| .000 | .4747 | .4402 |
| 40.000 | .4553 | .3267 |

ALPHA ( 4) = 7.892 BETA ( 2) = .182 MACH = 1.3932 Q = 599.39 P = 441.12 RN/L = 2.9102

SECTION ( 1)BODY FLAP LOWER DEPENDENT VARIABLE CP

| X/LB | 1.0180 | 1.0460 |
|---|---|---|
| PHI | | |
| .000 | .4720 | .4275 |
| 40.000 | .4045 | .3017 |

ALPHA ( 4) = 7.830 BETA ( 3) = 4.245 MACH = 1.3932 Q = 599.39 P = 441.12 RN/L = 2.9102

SECTION ( 1)BODY FLAP LOWER DEPENDENT VARIABLE CP

| X/LB | 1.0180 | 1.0460 |
|---|---|---|
| PHI | | |
| .000 | .4753 | .4379 |
| 40.000 | .3717 | .2858 |

ALPHA ( 5) = 11.870 BETA ( 1) = -3.851 MACH = 1.3941 Q = 600.12 P = 441.12 RN/L = 2.9072

SECTION ( 1)BODY FLAP LOWER DEPENDENT VARIABLE CP

| X/LB | 1.0180 | 1.0460 |
|---|---|---|
| PHI | | |
| .000 | .5987 | .5050 |
| 40.000 | .5201 | .3612 |

ALPHA ( 5) = 11.880 BETA ( 2) = .187 MACH = 1.3941 Q = 600.12 P = 441.12 RN/L = 2.9072

SECTION ( 1)BODY FLAP LOWER DEPENDENT VARIABLE CP

| X/LB | 1.0180 | 1.0460 |
|---|---|---|
| PHI | | |
| .000 | .5933 | .4963 |
| 40.000 | .4791 | .3464 |

AMES 11-073(OA148) -140A/B/C/R ORB BODY FLAP LWR (XE8G38)

ALPHA ( 5) = 11.873 BETA ( 3) = 4.255 MACH = 1.3941 Q = 600.12 P = 441.12 RN/L = 2.9072

SECTION ( 1)BODY FLAP LOWER DEPENDENT VARIABLE CP

| X/LB | 1.0180 | 1.0460 |
|---|---|---|
| PHI | | |
| .000 | .5999 | .5072 |
| 40.000 | .4698 | .3471 |

ALPHA ( 6) = 15.853 BETA ( 1) = -3.829 MACH = 1.3929 Q = 599.99 P = 441.82 RN/L = 2.9183

SECTION ( 1)BODY FLAP LOWER DEPENDENT VARIABLE CP

| X/LB | 1.0180 | 1.0460 |
|---|---|---|
| PHI | | |
| .000 | .7004 | .5547 |
| 40.000 | .5623 | .3842 |

ALPHA ( 6) = 15.866 BETA ( 2) = .185 MACH = 1.3929 Q = 599.99 P = 441.82 RN/L = 2.9183

SECTION ( 1)BODY FLAP LOWER DEPENDENT VARIABLE CP

| X/LB | 1.0180 | 1.0460 |
|---|---|---|
| PHI | | |
| .000 | .7014 | .5518 |
| 40.000 | .5570 | .3839 |

ALPHA ( 6) = 15.858 BETA ( 3) = 4.285 MACH = 1.3929 Q = 599.99 P = 441.82 RN/L = 2.9183

SECTION ( 1)BODY FLAP LOWER DEPENDENT VARIABLE CP

| X/LB | 1.0180 | 1.0460 |
|---|---|---|
| PHI | | |
| .000 | .7010 | .5583 |
| 40.000 | .5450 | .3914 |

ORIGINAL PAGE IS
OF POOR QUALITY

AMES 11-073(OA148) -140A/B/C/R ORB BODY FLAP LWR (XE8G39) ( 05 AUG 75 )

REFERENCE DATA

SREF = 2690.0000 SQ.FT. XMRP = 1076.6800 IN. XO
LREF = 474.8000 IN. YMRP = .0000 IN. YO
BREF = 936.0680 IN. ZMRP = 375.0000 IN. ZO
SCALE = .0300

PARAMETRIC DATA

RUDDER = 10.000 SPDBRK = 85.000
BDFLAP = 16.300 L-ELVN = 10.000
R-ELVN = 10.000 MACH = 1.250

ALPHA ( 1) = -3.991 BETA ( 1) = -3.847 MACH = 1.2464 Q = 599.79 P = 551.57 RN/L = 3.0146

SECTION ( 1)BODY FLAP LOWER DEPENDENT VARIABLE CP

| X/LB | 1.0180 | 1.0460 |
|---|---|---|
| PHI | | |
| .000 | .2436 | .2200 |
| 40.000 | .1418 | .0883 |

ALPHA ( 1) = -3.979 BETA ( 2) = .190 MACH = 1.2464 Q = 599.79 P = 551.57 RN/L = 3.0146

SECTION ( 1)BODY FLAP LOWER DEPENDENT VARIABLE CP

| X/LB | 1.0180 | 1.0460 |
|---|---|---|
| PHI | | |
| .000 | .2342 | .2328 |
| 40.000 | .1050 | .0787 |

ALPHA ( 1) = -3.988 BETA ( 3) = 4.277 MACH = 1.2464 Q = 599.79 P = 551.57 RN/L = 3.0146

SECTION ( 1)BODY FLAP LOWER DEPENDENT VARIABLE CP

| X/LB | 1.0180 | 1.0460 |
|---|---|---|
| PHI | | |
| .000 | .2322 | .2119 |
| 40.000 | .1552 | .1018 |

ALPHA ( 2) = .058 BETA ( 1) = -3.868 MACH = 1.2468 Q = 599.66 P = 551.10 RN/L = 3.0101

SECTION ( 1)BODY FLAP LOWER DEPENDENT VARIABLE CP

| X/LB | 1.0180 | 1.0460 |
|---|---|---|
| PHI | | |
| .000 | .2850 | .2625 |
| 40.000 | .2661 | .1947 |

AMES 11-073(OA148) -140A/B/C/R ORB BODY FLAP LWR (XE8G39)

ALPHA ( 2) = .062 BETA ( 2) = .177 MACH = 1.2468 Q = 599.66 P = 551.10 RN/L = 3.0101

SECTION ( 1)BODY FLAP LOWER DEPENDENT VARIABLE CP

| X/LB | 1.0180 | 1.0460 |
|---|---|---|
| PHI | | |
| .000 | .3105 | .2812 |
| 40.000 | .2183 | .1497 |

ALPHA ( 2) = .021 BETA ( 3) = 4.254 MACH = 1.2468 Q = 599.66 P = 551.10 RN/L = 3.0101

SECTION ( 1)BODY FLAP LOWER DEPENDENT VARIABLE CP

| X/LB | 1.0180 | 1.0460 |
|---|---|---|
| PHI | | |
| .000 | .2854 | .2603 |
| 40.000 | .2215 | .1494 |

ALPHA ( 3) = 3.934 BETA ( 1) = -3.873 MACH = 1.2469 Q = 599.77 P = 551.10 RN/L = 3.0099

SECTION ( 1)BODY FLAP LOWER DEPENDENT VARIABLE CP

| X/LB | 1.0180 | 1.0460 |
|---|---|---|
| PHI | | |
| .000 | .4060 | .3448 |
| 40.000 | .3803 | .2500 |

ALPHA ( 3) = 3.935 BETA ( 2) = .189 MACH = 1.2469 Q = 599.77 P = 551.10 RN/L = 3.0099

SECTION ( 1)BODY FLAP LOWER DEPENDENT VARIABLE CP

| X/LB | 1.0180 | 1.0460 |
|---|---|---|
| PHI | | |
| .000 | .4142 | .3447 |
| 40.000 | .3300 | .2200 |

ALPHA ( 3) = 3.939 BETA ( 3) = 4.242 MACH = 1.2469 Q = 599.77 P = 551.10 RN/L = 3.0099

SECTION ( 1)BODY FLAP LOWER DEPENDENT VARIABLE CP

| X/LB | 1.0180 | 1.0460 |
|---|---|---|
| PHI | | |
| .000 | .4036 | .3431 |
| 40.000 | .3119 | .2108 |

AMES 11-073(OA148) -140A/B/C/R ORB BODY FLAP LWR (XE8G39)

ALPHA ( 4) = 7.935 BETA ( 1) = -3.863 MACH = 1.2467 Q = 599.84 P = 551.34 RN/L = 3.0131

SECTION ( 1)BODY FLAP LOWER DEPENDENT VARIABLE CP

| X/LB | 1.0180 | 1.0460 |
|---|---|---|
| PHI | | |
| .000 | .5190 | .4055 |
| 40.000 | .4646 | .2937 |

ALPHA ( 4) = 7.897 BETA ( 2) = .182 MACH = 1.2467 Q = 599.84 P = 551.34 RN/L = 3.0131

SECTION ( 1)BODY FLAP LOWER DEPENDENT VARIABLE CP

| X/LB | 1.0180 | 1.0460 |
|---|---|---|
| PHI | | |
| .000 | .5227 | .4017 |
| 40.000 | .4246 | .2735 |

ALPHA ( 4) = 7.878 BETA ( 3) = 4.243 MACH = 1.2467 Q = 599.84 P = 551.34 RN/L = 3.0131

SECTION ( 1)BODY FLAP LOWER DEPENDENT VARIABLE CP

| X/LB | 1.0180 | 1.0460 |
|---|---|---|
| PHI | | |
| .000 | .5203 | .4100 |
| 40.000 | .4053 | .2555 |

ALPHA ( 5) = 11.869 BETA ( 1) = -3.849 MACH = 1.2475 Q = 600.06 P = 550.87 RN/L = 3.0127

SECTION ( 1)BODY FLAP LOWER DEPENDENT VARIABLE CP

| X/LB | 1.0180 | 1.0460 |
|---|---|---|
| PHI | | |
| .000 | .6110 | .4493 |
| 40.000 | .5299 | .3193 |

ALPHA ( 5) = 11.810 BETA ( 2) = .187 MACH = 1.2475 Q = 600.06 P = 550.87 RN/L = 3.0127

SECTION ( 1)BODY FLAP LOWER DEPENDENT VARIABLE CP

| X/LB | 1.0180 | 1.0460 |
|---|---|---|
| PHI | | |
| .000 | .6082 | .4434 |
| 40.000 | .4902 | .3015 |

AMES 11-073(OA148) -140A/B/C/R ORB BODY FLAP LWR (XE8G39)

ALPHA ( 5) = 11.866 BETA ( 3) = 4.252 MACH = 1.2475 Q = 600.06 P = 550.87 RN/L = 3.0127

SECTION ( 1)BODY FLAP LOWER DEPENDENT VARIABLE CP

| X/LB | 1.0180 | 1.0460 |
|---|---|---|
| PHI | | |
| .000 | .6099 | .4492 |
| 40.000 | .4557 | .2761 |

ORIGINAL PAGE IS OF POOR QUALITY

AMES 11-073(OA148) -140A/B/C/R ORB BODY FLAP LWR (XEBG40) ( 05 AUG 75 )

REFERENCE DATA

SREF = 2690.0000 SQ.FT. XMRP = 1076.6800 IN. XO
LREF = 474.8000 IN. YMRP = .0000 IN. YO
BREF = 935.0680 IN. ZMRP = 375.0000 IN. ZO
SCALE = .0300

PARAMETRIC DATA

RUDDER = 10.000 SPDBRK = 85.000
BDFLAP = 16.300 L-ELVN = 10.000
R-ELVN = 10.000 MACH = 1.100

ALPHA ( 1) = -3.999 BETA ( 1) = -3.842 MACH = 1.1017 Q = 601.11 P = 707.47 RN/L = 3.1883

SECTION ( 1)BODY FLAP LOWER DEPENDENT VARIABLE CP

| X/LB | 1.0180 | 1.0460 |
|---|---|---|
| PHI | | |
| .000 | .3069 | .2334 |
| 40.000 | .1926 | .1361 |

ALPHA ( 1) = -3.997 BETA ( 2) = .194 MACH = 1.1017 Q = 601.11 P = 707.47 RN/L = 3.1883

SECTION ( 1)BODY FLAP LOWER DEPENDENT VARIABLE CP

| X/LB | 1.0180 | 1.0460 |
|---|---|---|
| PHI | | |
| .000 | .3362 | .2706 |
| 40.000 | .1850 | .1451 |

ALPHA ( 1) = -3.996 BETA ( 3) = 4.277 MACH = 1.1017 Q = 601.11 P = 707.47 RN/L = 3.1883

SECTION ( 1)BODY FLAP LOWER DEPENDENT VARIABLE CP

| X/LB | 1.0180 | 1.0460 |
|---|---|---|
| PHI | | |
| .000 | .2873 | .2232 |
| 40.000 | .2112 | .1319 |

ALPHA ( 2) = .015 BETA ( 1) = -3.867 MACH = 1.1001 Q = 600.08 P = 708.37 RN/L = 3.1860

SECTION ( 1)BODY FLAP LOWER DEPENDENT VARIABLE CP

| X/LB | 1.0180 | 1.0460 |
|---|---|---|
| PHI | | |
| .000 | .3514 | .2452 |
| 40.000 | .3368 | .1852 |

AMES 11-073(OA148) -140A/B/C/R ORB BODY FLAP LWR (XEBG40)

ALPHA ( 2) = .018 BETA ( 2) = .181 MACH = 1.1001 Q = 600.08 P = 708.37 RN/L = 3.1860

SECTION ( 1)BODY FLAP LOWER DEPENDENT VARIABLE CP

| X/LB | 1.0180 | 1.0460 |
|---|---|---|
| PHI | | |
| .000 | .3856 | .2656 |
| 40.000 | .2823 | .1531 |

ALPHA ( 2) = .012 BETA ( 3) = 4.250 MACH = 1.1001 Q = 600.08 P = 708.37 RN/L = 3.1860

SECTION ( 1)BODY FLAP LOWER DEPENDENT VARIABLE CP

| X/LB | 1.0180 | 1.0460 |
|---|---|---|
| PHI | | |
| .000 | .3427 | .2463 |
| 40.000 | .2695 | .1260 |

ALPHA ( 3) = 3.919 BETA ( 1) = -3.865 MACH = 1.1005 Q = 600.31 P = 708.14 RN/L = 3..848

SECTION ( 1)BODY FLAP LOWER DEPENDENT VARIABLE CP

| X/LB | 1.0180 | 1.0460 |
|---|---|---|
| PHI | | |
| .000 | .4427 | .2919 |
| 40.000 | .4131 | .2007 |

ALPHA ( 3) = 3.917 BETA ( 2) = .178 MACH = 1.1005 Q = 600.31 P = 708.14 RN/L = 3.1848

SECTION ( 1)BODY FLAP LOWER DEPENDENT VARIABLE CP

| X/LB | 1.0180 | 1.0460 |
|---|---|---|
| PHI | | |
| .000 | .4551 | .2959 |
| 40.000 | .3718 | .1758 |

ALPHA ( 3) = 3.924 BETA ( 3) = 4.244 MACH = 1.1005 Q = 600.31 P = 708.14 RN/L = 3.1848

SECTION ( 1)BODY FLAP LOWER DEPENDENT VARIABLE CP

| X/LB | 1.0180 | 1.0460 |
|---|---|---|
| PHI | | |
| .000 | .4412 | .2923 |
| 40.000 | .3316 | .1493 |

AMES 11-073(OA148) -140A/B/C/R ORB BODY FLAP LWR (XE8640)

ALPHA ( 4) = 7.901 BETA ( 1) = -3.860 MACH = 1.1015 Q = 600.67 P = 707.22 RN/L = 3.1834

SECTION ( 1)BODY FLAP LOWER DEPENDENT VARIABLE CP

| X/LB | 1.0180 | 1.0460 |
|---|---|---|
| PHI | | |
| .000 | .5227 | .3260 |
| 40.000 | .4563 | .2039 |

ALPHA ( 4) = 7.905 BETA ( 2) = .181 MACH = 1.1015 Q = 600.67 P = 707.22 RN/L = 3.1834

SECTION ( 1)BODY FLAP LOWER DEPENDENT VARIABLE CP

| X/LB | 1.0180 | 1.0460 |
|---|---|---|
| PHI | | |
| .000 | .5233 | .3256 |
| 40.000 | .4239 | .1913 |

ALPHA ( 4) = 7.904 BETA ( 3) = 4.239 MACH = 1.1015 Q = 600.67 P = 707.22 RN/L = 3.1834

SECTION ( 1)BODY FLAP LOWER DEPENDENT VARIABLE CP

| X/LB | 1.0180 | 1.0460 |
|---|---|---|
| PHI | | |
| .000 | .5194 | .3233 |
| 40.000 | .3899 | .1674 |

ALPHA ( 5) = 11.906 BETA ( 1) = -3.844 MACH = 1.0995 Q = 600.08 P = 709.07 RN/L = 3.1837

SECTION ( 1)BODY FLAP LOWER DEPENDENT VARIABLE CP

| X/LB | 1.0180 | 1.0460 |
|---|---|---|
| PHI | | |
| .000 | .5759 | .3469 |
| 40.000 | .4611 | .2078 |

ALPHA ( 5) = 11.808 BETA ( 2) = .188 MACH = 1 0995 Q = 600.08 P = 709.07 RN/L = 3.1837

SECTION ( 1)BODY FLAP LOWER DEPENDENT VARIABLE CP

| X/LB | 1.0180 | 1.0460 |
|---|---|---|
| PHI | | |
| .000 | .5753 | .3490 |
| 40.000 | .4554 | .2007 |

AMES 11-073(OA148) -140A/B/C/R ORB BODY FLAP LWR (XEBG40)

ALPHA ( 5) = 11.865 BETA ( 3) = 4.250 MACH = 1.0995 Q = 600.08 P = 709.07 RN/L = 3.1837

SECTION ( 1)BODY FLAP LOWER DEPENDENT VARIABLE CP

| X/LB | 1.0180 | 1.0460 |
|---|---|---|
| PHI | | |
| .000 | .5760 | .3473 |
| 40.000 | .4200 | .1814 |

AMES 11-073(OA148) -140A/B/C/R ORB BODY FLAP LWR (XE8G41) ( 05 AUG 75 )

REFERENCE DATA

SREF = 2690.0000 SQ.FT. XMRP = 1076.6800 IN. XO
LREF = 474.6000 IN. YMRP = .0000 IN. YO
BREF = 935.0580 IN. ZMRP = 375.0000 IN. ZO
SCALE = .0300

PARAMETRIC DATA

RUDDER = 10.000 SPDBRK = 85.000
BDFLAP = 16.300 L-ELVN = 10.000
R-ELVN = 10.000 MACH = .900

ALPHA ( 1) = -3.997 BETA ( 1) = -3.840 MACH = .89993 Q = 599.67 P = 1057.8 RN/L = 3.5780

SECTION ( 1)BODY FLAP LOWER DEPENDENT VARIABLE CP

| X/LB | 1.0180 | 1.0460 |
|---|---|---|
| PHI | | |
| .000 | .3071 | .0947 |
| 40.000 | .2149 | .0228 |

ALPHA ( 1) = -3.991 BETA ( 2) = .189 MACH = .89993 Q = 599.67 P = 1057.8 RN/L = 3.5780

SECTION ( 1)BODY FLAP LOWER DEPENDENT VARIABLE CP

| X/LB | 1.0180 | 1.0460 |
|---|---|---|
| PHI | | |
| .000 | .3334 | .1141 |
| 40.000 | .1891 | .0059 |

ALPHA ( 1) = -3.992 BETA ( 3) = 4.274 MACH = .89993 Q = 599.67 P = 1057.8 RN/L = 3.5780

SECTION ( 1)BODY FLAP LOWER DEPENDENT VARIABLE CP

| X/LB | 1.0180 | 1.0460 |
|---|---|---|
| PHI | | |
| .000 | .3062 | .0944 |
| 40.000 | .2149 | -.0018 |

ALPHA ( 2) = .052 BETA ( 1) = -3.863 MACH = .89853 Q = 598.47 P = 1059.0 RN/L = 3.5741

SECTION ( 1)BODY FLAP LOWER DEPENDENT VARIABLE CP

| X/LB | 1.0180 | 1.0460 |
|---|---|---|
| PHI | | |
| .000 | .3182 | .1020 |
| 40.000 | .2669 | .0456 |

AMES 11-073(OA148) -140A/B/C/R ORB BODY FLAP LWR (XEB041)

ALPHA ( 2) = .055 BETA ( 2) = .182 MACH = .89853 Q = 598.47 P = 1059.0 RN/L = 3.5741

SECTION ( 1)BODY FLAP LOWER DEPENDENT VARIABLE CP

| X/LB | 1.0180 | 1.0460 |
|---|---|---|
| PHI | | |
| .000 | .3293 | .1052 |
| 40.000 | .2265 | .0107 |

ALPHA ( 2) = .070 BETA ( 3) = 4.253 MACH = .89853 Q = 598.47 P = 1059.0 RN/L = 3.5741

SECTION ( 1)BODY FLAP LOWER DEPENDENT VARIABLE CP

| X/LB | 1.0180 | 1.0460 |
|---|---|---|
| PHI | | |
| .000 | .3154 | .0999 |
| 40.000 | .2048 | -.0077 |

ALPHA ( 3) = 3.947 BETA ( 1) = -3.868 MACH = .89830 Q = 598.51 P = 1059.5 RN/L = 3.5778

SECTION ( 1)BODY FLAP LOWER DEPENDENT VARIABLE CP

| X/LB | 1.0180 | 1.0460 |
|---|---|---|
| PHI | | |
| .000 | .3641 | .1184 |
| 40.000 | .2889 | .0516 |

ALPHA ( 3) = 4.018 BETA ( 2) = .184 MACH = .89830 Q = 598.51 P = 1059.5 RN/L = 3.5778

SECTION ( 1)BODY FLAP LOWER DEPENDENT VARIABLE CP

| X/LB | 1.0180 | 1.0460 |
|---|---|---|
| PHI | | |
| .000 | .3618 | .1156 |
| 40.000 | .2582 | .0225 |

ALPHA ( 3) = 4.018 BETA ( 3) = 4.245 MACH = .89830 Q = 598.51 P = 1059.5 RN/L = 3.5778

SECTION ( 1)BODY FLAP LOWER DEPENDENT VARIABLE CP

| X/LB | 1.0180 | 1.0460 |
|---|---|---|
| PHI | | |
| .000 | .3677 | .1220 |
| 40.000 | .2368 | .0061 |

AMES 11-073(OA148) -140A/B/C/R ORB BODY FLAP LWR (XE8G41)

ALPHA ( 4) = 7.919 BETA ( 1) = -3.861 MACH = .89927 Q = 599.06 P = 1058.3 RN/L = 3.5789

SECTION ( 1)BODY FLAP LOWER DEPENDENT VARIAELE CP

| X/LB | 1.0180 | 1.0460 |
|---|---|---|
| PHI | | |
| .000 | .4056 | .1321 |
| 40.000 | .3101 | .0520 |

ALPHA ( 4) = 7.925 BETA ( 2) = .181 MACH = .89927 Q = 599.06 P = 1058.3 RN/L = 3.5789

SECTION ( 1)BODY FLAP LOWER DEPENDENT VARIABLE CP

| X/LB | 1.0180 | 1.0460 |
|---|---|---|
| PHI | | |
| .000 | .4018 | .1299 |
| 40.000 | .2843 | .0274 |

ALPHA ( 4) = 7.877 BETA ( 3) = 4.247 MACH = .89927 Q = 599.06 P = 1058.3 RN/L = 3.5789

SECTION ( 1)BODY FLAP LOWER DEPENDENT VARIABLE CP

| X/LB | 1.0180 | 1.0460 |
|---|---|---|
| PHI | | |
| .000 | .4092 | .1317 |
| 40.000 | .2642 | .0128 |

ALPHA ( 5) = 11.893 BETA ( 1) = -3.850 MACH = .89863 Q = 598.63 P = 1059.0 RN/L = 3.5769

SECTION ( 1)BODY FLAP LOWER DEPENDENT VARIABLE CP

| X/LB | 1.0180 | 1.0460 |
|---|---|---|
| PHI | | |
| .000 | .4244 | .1346 |
| 40.000 | .2999 | .0239 |

ALPHA ( 5) = 11.848 BETA ( 2) = .191 MACH = .89963 Q = 598.63 P = 1059.0 RN/L = 3.5769

SECTION ( 1)BODY FLAP LOWER DEPENDENT VARIABLE CP

| X/LB | 1.0180 | 1.0460 |
|---|---|---|
| PHI | | |
| .000 | .4266 | .1370 |
| 40.000 | .2896 | .0129 |

AMES 11-073(OA148) -140A/B/C/R ORB BODY FLAP LWR (XEBG4))

ALPHA ( 5) = 11.881 BETA ( 3) = 4.259 MACH = .89863 Q = 598.63 P = 1059.0 RN/L. = 3.5769

SECTION ( 1)BODY FLAP LOWER DEPENDENT VARIABLE CP

| X/LB | 1.0180 | 1.0460 |
|---|---|---|
| PHI | | |
| .000 | .4271 | .1427 |
| 40.000 | .2737 | .0057 |

AMES 11-073(OA148) -140A/B/C/R ORB BODY FLAP LWR (XE8G42) ( 05 AUG 75 )

REFERENCE DATA

SREF = 2690.0000 SQ.FT. XMRP = 1076.6800 IN. XO
LREF = 474.8000 IN. YMRP = .0000 IN. YO
BREF = 936.0580 IN. ZMRP = 375.0000 IN. ZO
SCALE = .0300

PARAMETRIC DATA

RUDDER = 10.000 SPDBRK = 85.000
BDFLAP = 16.300 L-ELVN = 10.000
R-ELVN = 10.000 MACH = .600

ALPHA ( 1) = -4.049 BETA ( 1) = -7.852 MACH = .59622 Q = 593.85 P = 2386.3 RN/L = 4.3696

SECTION ( 1)BODY FLAP LOWER DEPENDENT VARIABLE CP

| X/LB | 1.0180 | 1.0460 |
|---|---|---|
| PHI | | |
| .000 | .2311 | -.0147 |
| 40.000 | .1657 | -.0005 |

ALPHA ( 1) = -3.971 BETA ( 2) = -3.842 MACH = .59622 Q = 593.85 P = 2386.3 RN/L = 4.8696

SECTION ( 1)BODY FLAP LOWER DEPENDENT VARIABLE CP

| X/LB | 1.0180 | 1.0460 |
|---|---|---|
| PHI | | |
| .000 | .2386 | -.0123 |
| 40.000 | .1657 | -.0164 |

ALPHA ( 1) = -3.889 BETA ( 3) = .191 MACH = .59622 Q = 593.85 P = 2386.3 RN/L = 4.8696

SECTION ( 1)BODY FLAP LOWER DEPENDENT VARIABLE CP

| X/LB | 1.0180 | 1.0460 |
|---|---|---|
| PHI | | |
| .000 | .2602 | .0066 |
| 40.000 | .1405 | -.0727 |

ALPHA ( 1) = -3.983 BETA ( 4) = 4.273 MACH = .59622 Q = 593.85 P = 2386.3 RN/L = 4.8696

SECTION ( 1)BODY FLAP LOWER DEPENDENT VARIABLE CP

| X/LB | 1.0180 | 1.0460 |
|---|---|---|
| PHI | | |
| .000 | .2353 | -.0132 |
| 40.000 | .1426 | -.0877 |

AMES 11-073(OA148) -140A/B/C/R ORB BODY FLAP LWR (XE8G42)

ALPHA ( 1) = -3.999 BETA ( 5) = 8.343 MACH = .59622 Q = 593.85 P = 2386.3 RN/L = 4.8696

SECTION ( 1)BODY FLAP LOWER DEPENDENT VARIABLE CP

| X/LB | 1.0180 | 1.0460 |
|---|---|---|
| PHI | | |
| .000 | .2295 | -.0120 |
| 40.000 | .1181 | -.0988 |

ALPHA ( 2) = -.003 BETA ( 1) = -7.885 MACH = .59612 Q = 593.61 P = 2386.1 RN/L = 4.8734

SECTION ( 1)BODY FLAP LOWER DEPENDENT VARIABLE CP

| X/LB | 1.0180 | 1.0460 |
|---|---|---|
| PHI | | |
| .000 | .2692 | .0041 |
| 40.000 | .1989 | .0231 |

ALPHA ( 2) = .104 BETA ( 2) = -3.860 MACH = .59612 Q = 593.61 P = 2386.1 RN/L = 4.8734

SECTION ( 1)BODY FLAP LOWER DEPENDENT VARIABLE CP

| X/LB | 1.0180 | 1.0460 |
|---|---|---|
| PHI | | |
| .000 | .2494 | -.0021 |
| 40.000 | .1895 | -.0104 |

ALPHA ( 2) = .114 BETA ( 3) = .190 MACH = .59612 Q = 593.61 P = 2386.1 RN/L = 4.8734

SECTION ( 1)BODY FLAP LOWER DEPENDENT VARIABLE CP

| X/LB | 1.0180 | 1.0460 |
|---|---|---|
| PHI | | |
| .000 | .2518 | .0039 |
| 40.000 | .1584 | -.0705 |

ALPHA ( 2) = .111 BETA ( 4) = 4.251 MACH = .59612 Q = 593.61 P = 2386.1 RN/L = 4.8734

SECTION ( 1)BODY FLAP LOWER DEPENDENT VARIABLE CP

| X/LB | 1.0180 | 1.0460 |
|---|---|---|
| PHI | | |
| .000 | .2532 | -.0037 |
| 40.000 | .1336 | -.0825 |

ORIGINAL PAGE IS
OF POOR QUALITY

AMES 11-073(OA148) -140A/B/C/R ORB BODY FLAP LWR (XEBG42)

ALPHA ( 2) = .040 BETA ( 5) = 8.310 MACH = .59612 Q = 593.61 P = 2386.1 RN/L = 4.8734

SECTION ( 1)BODY FLAP LOWER DEPENDENT VARIABLE CP

| X/LB | 1.0180 | 1.0460 |
|---|---|---|
| PHI | | |
| .000 | .2614 | .0030 |
| 40.000 | .1245 | -.0890 |

ALPHA ( 3) = 4.041 BETA ( 1) = -7.899 MACH = .59674 Q = 594.79 P = 2386.0 RN/L = 4.8833

SECTION ( 1)BODY FLAP LOWER DEPENDENT VARIABLE CP

| X/LB | 1.0180 | 1.0460 |
|---|---|---|
| PHI | | |
| .000 | .2923 | .0157 |
| 40.000 | .2164 | .0258 |

ALPHA ( 3) = 3.969 BETA ( 2) = -3.860 MACH = .59674 Q = 594.79 P = 2386.0 RN/L = 4.8833

SECTION ( 1)BODY FLAP LOWER DEPENDENT VARIABLE CP

| X/LB | 1.0180 | 1.0460 |
|---|---|---|
| PHI | | |
| .000 | .2830 | .0118 |
| 40.000 | .2091 | -.0125 |

ALPHA ( 3) = 4.049 BETA ( 3) = .193 MACH = .59674 Q = 594.79 P = 2386.0 RN/L = 4.8833

SECTION ( 1)BODY FLAP LOWER DEPENDENT VARIABLE CP

| X/LB | 1.0180 | 1.0460 |
|---|---|---|
| PHI | | |
| .000 | .2734 | .0189 |
| 40.000 | .1756 | -.0524 |

ALPHA ( 3) = 3.947 BETA ( 4) = 4.242 MACH = .59674 Q = 594.79 P = 2386.0 RN/L = 4.8833

SECTION ( 1)BODY FLAP LOWER DEPENDENT VARIABLE CP

| X/LB | 1.0180 | 1.0460 |
|---|---|---|
| PHI | | |
| .000 | .2758 | .0082 |
| 40.000 | .1516 | -.0759 |

AMES 11-073(OA148) -140A/B/C/R ORB BODY FLAP LWR (XE8G42)

ALPHA ( 3) = 3.985 BETA ( 5) = 8.292 MACH = .59674 Q = 594.79 P = 2386.0 RN/L = 4.8833

SECTION ( 1)BODY FLAP LOWER DEPENDENT VARIABLE CP

| X/LB | 1.0180 | 1.0460 |
|---|---|---|
| PHI | | |
| .000 | .2859 | .0140 |
| 40.000 | .1444 | -.0771 |

ALPHA ( 4) = 7.905 BETA ( 1) = -7.888 MACH = .59644 Q = 594.20 P = 2386.1 RN/L = 4.8802

SECTION ( 1)BODY FLAP LOWER DEPENDENT VARIABLE CP

| X/LB | 1.0180 | 1.0460 |
|---|---|---|
| PHI | | |
| .000 | .3095 | .0182 |
| 40.000 | .2229 | .0248 |

ALPHA ( 4) = 7.915 BETA ( 2) = -3.855 MACH = .59644 Q = 594.20 P = 2386.1 RN/L = 4.8802

SECTION ( 1)BODY FLAP LOWER DEPENDENT VARIABLE CP

| X/LB | 1.0180 | 1.0460 |
|---|---|---|
| PHI | | |
| .000 | .3051 | .0246 |
| 40.000 | .2210 | -.0039 |

ALPHA ( 4) = 8.038 BETA ( 3) = .180 MACH = .59644 Q = 594.20 P = 2386.1 RN/L = 4.8802

SECTION ( 1)BODY FLAP LOWER DEPENDENT VARIABLE CP

| X/LB | 1.0180 | 1.0460 |
|---|---|---|
| PHI | | |
| .000 | .3019 | .0361 |
| 40.000 | .1991 | -.0320 |

ALPHA ( 4) = 8.035 BETA ( 4) = 4.244 MACH = .59644 Q = 594.20 P = 2386.1 RN/L = 4.8802

SECTION ( 1)BODY FLAP LOWER DEPENDENT VARIABLE CP

| X/LB | 1.0180 | 1.0460 |
|---|---|---|
| PHI | | |
| .000 | .3040 | .0192 |
| 40.000 | .1770 | -.0608 |

AMES 11-073(OA148) -140A/B/C/R ORB BODY FLAP LWR (XEBG42)

ALPHA ( 4) = 8.035 BETA ( 5) = 8.296 MACH = .59644 Q = 594.20 P = 2386.1 RN/L = 4.8902

SECTION ( 1)BODY FLAP LOWER DEPENDENT VARIABLE CP

| X/LB | 1.0180 | 1.0460 |
|---|---|---|
| PHI | | |
| .000 | .3064 | .0161 |
| 40.000 | .1593 | -.0745 |

ALPHA ( 5) = 11.910 BETA ( 1) = -7.853 MACH = .59658 Q = 594.43 P = 2385.8 RN/L = 4.8825

SECTION ( 1)BODY FLAP LOWER DEPENDENT VARIABLE CP

| X/LB | 1.0180 | 1.0460 |
|---|---|---|
| PHI | | |
| .000 | .3311 | .0448 |
| 40.000 | .2369 | .0065 |

ALPHA ( 5) = 11.930 BETA ( 2) = -3.836 MACH = .59658 Q = 594.43 P = 2385.8 RN/L = 4.8825

SECTION ( 1)BODY FLAP LOWER DEPENDENT VARIABLE CP

| X/LB | 1.0180 | 1.0460 |
|---|---|---|
| PHI | | |
| .000 | .3282 | .0415 |
| 40.000 | .2273 | -.0183 |

ALPHA ( 5) = 11.966 BETA ( 3) = .177 MACH = .59658 Q = 594.43 P = 2385.8 RN/L = 4.8825

SECTION ( 1)BODY FLAP LOWER DEPENDENT VARIABLE CP

| X/LB | 1.0180 | 1.0460 |
|---|---|---|
| PHI | | |
| .000 | .3318 | .0539 |
| 40.000 | .2159 | -.0256 |

ALPHA ( 5) = 11.976 BETA ( 4) = 4.252 MACH = .59658 Q = 594.43 P = 2385.8 RN/L = 4.8825

SECTION ( 1)BODY FLAP LOWER DEPENDENT VARIABLE CP

| X/LB | 1.0180 | 1.0460 |
|---|---|---|
| PHI | | |
| .000 | .3291 | .0404 |
| 40.000 | .1971 | -.0532 |

AMES 11-073(OA148) -140A/B/C/R ORB BODY FLAP LWR (XE8G42)

ALPHA ( 5) = 12.034 BETA ( 5) = 8.318 MACH = .59658 Q = 594.43 P = 2385.6 RN/L = 4.8825

SECTION ( 1)BODY FLAP LOWER DEPENDENT VARIABLE CP

| X/LB | 1.0180 | 1.0460 |
|---|---|---|
| PHI | | |
| .000 | .3263 | .0396 |
| 40.000 | .1801 | -.0520 |

AMES 11-073(OA148) -140A/B/C/R ORB BODY FLAP LWR (XE8G43) ( 05 AUG 75 )

REFERENCE DATA

SREF = 2690.0000 SQ.FT. XMRP = 1076.6800 IN. XO
LREF = 474.6000 IN. YMRP = .0000 IN. YO
BREF = 936.0580 IN. ZMRP = 375.0000 IN. ZO
SCALE = .0300

PARAMETRIC DATA

RUDDER = .000 SPDBRK = 55.000
BDFLAP = 22.500 L-ELVN = 10.000
R-ELVN = 10.000 MACH = .900

ALPHA ( 1) = -4.070 BETA ( 1) = -3.850 MACH = .89793 Q = 598.79 P = 1060.9 RN/L = 3.6697

SECTION ( 1)BODY FLAP LOWER DEPENDENT VARIABLE CP

| X/LB | 1.0180 | 1.0460 |
|---|---|---|
| PHI | | |
| .000 | .4165 | .2123 |
| 40.000 | .3089 | .1277 |

ALPHA ( 1) = -4.069 BETA ( 2) = .187 MACH = .89793 Q = 598.79 P = 1060.9 RN/L = 3.6697

SECTION ( 1)BODY FLAP LOWER DEPENDENT VARIABLE CP

| X/LB | 1.0180 | 1.0460 |
|---|---|---|
| PHI | | |
| .000 | .4396 | .2273 |
| 40.000 | .3064 | .1178 |

ALPHA ( 1) = -4.079 BETA ( 3) = 4.272 MACH = .89793 Q = 598.79 P = 1060.9 RN/L = 3.6697

SECTION ( 1)BODY FLAP LOWER DEPENDENT VARIABLE CP

| X/LB | 1.0180 | 1.0460 |
|---|---|---|
| PHI | | |
| .000 | .4022 | .2071 |
| 40.000 | .3274 | .1026 |

ALPHA ( 2) = -.029 BETA ( 1) = -3.865 MACH = .89677 Q = 597.91 P = 1062.1 RN/L = 3.6486

SECTION ( 1)BODY FLAP LOWER DEPENDENT VARIABLE CP

| X/LB | 1.0180 | 1.0460 |
|---|---|---|
| PHI | | |
| .000 | .4032 | .2110 |
| 40.000 | .4018 | .1421 |

AMES 11-073(OA148) -140A/B/C/R ORB BODY FLAP LWR (XEBG43)

ALPHA ( 2) = -.015 BETA ( 2) = .186 MACH = .89677 Q = 597.91 P = 1062.1 RN/L = 3.6486

SECTION ( 1)BODY FLAP LOWER DEPENDENT VARIABLE CP

| X/LB | 1.0180 | 1.0460 |
|---|---|---|
| PHI | | |
| .000 | .4323 | .2186 |
| 40.000 | .3322 | .1175 |

ALPHA ( 2) = -.021 BETA ( 3) = 4.247 MACH = .89677 Q = 597.91 P = 1062.1 RN/L = 3.6486

SECTION ( 1)BODY FLAP LOWER DEPENDENT VARIABLE CP

| X/LB | 1.0180 | 1.0460 |
|---|---|---|
| PHI | | |
| .000 | .3966 | .2085 |
| 40.000 | .3120 | .0929 |

ALPHA ( 3) = 3.931 BETA ( 1) = -3.870 MACH = .89677 Q = 597.91 P = 1062.1 RN/L = 3.6364

SECTION ( 1)BODY FLAP LOWER DEPENDENT VARIABLE CP

| X/LB | 1.0180 | 1.0460 |
|---|---|---|
| PHI | | |
| .000 | .4716 | .2340 |
| 40.000 | .4359 | .1515 |

ALPHA ( 3) = 3.931 BETA ( 2) = .185 MACH = .89677 Q = 597.91 P = 1062.1 RN/L = 3.6364

SECTION ( 1)BODY FLAP LOWER DEPENDENT VARIABLE CP

| X/LB | 1.0180 | 1.0460 |
|---|---|---|
| PHI | | |
| .000 | .4709 | .2341 |
| 40.000 | .3778 | .1281 |

ALPHA ( 3) = 3.933 BETA ( 3) = 4.242 MACH = .89677 Q = 597.91 P = 1062.1 RN/L = 3.6364

SECTION ( 1)BODY FLAP LOWER DEPENDENT VARIABLE CP

| X/LB | 1.0180 | 1.0460 |
|---|---|---|
| PHI | | |
| .000 | .4741 | .2340 |
| 40.000 | .3555 | .1043 |

AMES 11-073(OA148) -140A/B/C/R ORB BODY FLAP LWR (XEBG43)

ALPHA ( 4) = 7.998 BETA ( 1) = -3.866 MACH = .89613 Q = 597.48 P = 1062.9 RN/L = 3.6207

SECTION ( 1)BODY FLAP LOWER DEPENDENT VARIABLE CP

| X/LB | 1.0180 | 1.0460 |
|---|---|---|
| PHI | | |
| .000 | .5201 | .2485 |
| 40.000 | .4512 | .1556 |

ALPHA ( 4) = 8.006 BETA ( 2) = .180 MACH = .89613 Q = 597.48 P = 1062.9 RN/L = 3.6207

SECTION ( 1)BODY FLAP LOWER DEPENDENT VARIABLE CP

| X/LB | 1.0180 | 1.0460 |
|---|---|---|
| PHI | | |
| .000 | .5212 | .2493 |
| 40.000 | .4185 | .1367 |

ALPHA ( 4) = 8.004 BETA ( 3) = 4.244 MACH = .89613 Q = 597.48 P = 1062.9 RN/L = 3.6207

SECTION ( 1)BODY FLAP LOWER DEPENDENT VARIABLE CP

| X/LB | 1.0180 | 1.0460 |
|---|---|---|
| PHI | | |
| .000 | .5246 | .2497 |
| 40.000 | .3878 | .1059 |

ALPHA ( 5) = 11.977 BETA ( 1) = -3.853 MACH = .89753 Q = 598.50 P = 1061.4 RN/L = 3.6129

SECTION ( 1)BODY FLAP LOWER DEPENDENT VARIABLE CP

| X/LB | 1.0180 | 1.0460 |
|---|---|---|
| PHI | | |
| .000 | .5562 | .2483 |
| 40.000 | .4446 | .1322 |

ALPHA ( 5) = 11.989 BETA ( 2) = .182 MACH = .89753 Q = 598.50 P = 1061.4 RN/L = 3.6129

SECTION ( 1)BODY FLAP LOWER DEPENDENT VARIABLE CP

| X/LB | 1.0180 | 1.0460 |
|---|---|---|
| PHI | | |
| .000 | .5564 | .2543 |
| 40.000 | .4303 | .1169 |

AMES 11-073(OA148) -140A/B/C/R ORB BODY FLAP LWR (XEBG43)

ALPHA ( 5) = 11.978 BETA ( 3) = 4.261 MACH = .89753 Q = 598.50 P = 1061.4 RN/L = 3.6129

SECTION ( 1:BODY FLAP LOWER DEPENDENT VARIABLE CP

| X/LB | 1.0180 | 1.0430 |
|---|---|---|
| PHI | | |
| .000 | .5590 | .2548 |
| 40.000 | .3957 | .0943 |

ORIGINAL PAGE IS
OF POOR QUALITY

AMES 11-073(OA148) -140A/B/C/R ORB BODY FLAP LWR (XEB044) ( 05 AUG 75 )

REFERENCE DATA

SREF = 2690.0000 SQ.FT. XMRP = 1076.6800 IN. XO
LREF = 474.8000 IN. YMRP = .0000 IN. YO
BREF = 936.0680 IN. ZMRP = 375.0000 IN. ZO
SCALE = .0300

PARAMETRIC DATA

RUDDER = .000 SPOBRK = 55.000
BDFLAP = 22.500 L-ELVN = 10.000
R-ELVN = 10.000 MACH = .600

ALPHA ( 1) = -4.010 BETA ( 1) = -7.850 MACH = .59610 Q = 593.75 P = 2387.2 RN/L = 4.8840

SECTION ( 1)BODY FLAP LOWER DEPENDENT VARIABLE CP

| X/LB | 1.0180 | 1.0460 |
|---|---|---|
| PHI | | |
| .000 | .3471 | .0934 |
| 40.000 | .2932 | .0747 |

ALPHA ( 1) = -3.994 BETA ( 2) = -3.842 MACH = .59610 Q = 593.75 P = 2387.2 RN/L = 4.8840

SECTION ( 1)BODY FLAP LOWER DEPENDENT VARIABLE CP

| X/LB | 1.0180 | 1.0460 |
|---|---|---|
| PHI | | |
| .000 | .3532 | .0959 |
| 40.000 | .2898 | .0473 |

ALPHA ( 1) = -3.985 BETA ( 3) = .188 MACH = .59610 Q = 593.75 P = 2387.2 RN/L = 4.8840

SECTION ( 1)BODY FLAP LOWER DEPENDENT VARIABLE CP

| X/LB | 1.0180 | 1.0460 |
|---|---|---|
| PHI | | |
| .000 | .3793 | .1077 |
| 40.000 | .2547 | .0330 |

ALPHA ( 1) = -3.992 BETA ( 4) = 4.269 MACH = .59610 Q = 593.75 P = 2387.2 RN/L = 4.8840

SECTION ( 1)BODY FLAP LOWER DEPENDENT VARIABLE CP

| X/LB | 1.0180 | 1.0460 |
|---|---|---|
| PHI | | |
| .000 | .3485 | .0983 |
| 40.000 | .2662 | .0204 |

AMES 11-073(OA148) -140A/B/C/R ORB BODY FLAP LWR (XEBG44)

ALPHA ( 1) = -4.007 BETA ( 5) = 8.349 MACH = .59610 Q = 593.75 P = 2387.2 RN/L = 4.2340

SECTION ( 1)BODY FLAP LOWER DEPENDENT VARIABLE CP

| X/LB | 1.0180 | 1.0460 |
|---|---|---|
| PHI | | |
| .000 | .3450 | .0947 |
| 40.000 | .2436 | -.0014 |

ALPHA ( 2) = .039 BETA ( 1) = -7.986 MACH = .59632 Q = 593.96 P = 2386.1 RN/L = 4.8783

SECTION ( 1)BODY FLAP LOWER DEPENDENT VARIABLE CP

| X/LB | 1.0180 | 1.0460 |
|---|---|---|
| PHI | | |
| .000 | .3946 | .1053 |
| 40.000 | .3445 | .0940 |

ALPHA ( 2) = .052 BETA ( 2) = -3.866 MACH = .59632 Q = 593.96 P = 2386.1 RN/L = 4.8783

SECTION ( 1)BODY FLAP LOWER DEPENDENT VARIABLE CP

| X/LB | 1.0180 | 1.0460 |
|---|---|---|
| PHI | | |
| .000 | .3582 | .0990 |
| 40.000 | .3236 | .0562 |

ALPHA ( 2) = .053 BETA ( 3) = .192 MACH = .59632 Q = 593.96 P = 2386.1 RN/L = 4.8783

SECTION ( 1)BODY FLAP LOWER DEPENDENT VARIABLE CP

| X/LB | 1.0180 | 1.0460 |
|---|---|---|
| PHI | | |
| .000 | .3732 | .0959 |
| 40.000 | .2815 | .0392 |

ALPHA ( 2) = .049 BETA ( 4) = 4.248 MACH = .59632 Q = 593.96 P = 2386.1 RN/L = 4.8783

SECTION ( 1)BODY FLAP LOWER DEPENDENT VARIABLE CP

| X/LB | 1.0180 | 1.0460 |
|---|---|---|
| PHI | | |
| .000 | .3666 | .1000 |
| 40.000 | .2629 | .0148 |

AMES 11-073(OA148) -140A/B/C/R ORB BODY FLAP LWR (XEB044)

ALPHA ( 2) = .044 BETA ( 5) = 8.307 MACH = .59632 Q = 593.96 P = 2386.1 RN/L = 4.8783

SECTION ( 1)BODY FLAP LOWER DEPENDENT VARIABLE CP

| X/LB | 1.0180 | 1.0460 |
|---|---|---|
| PHI | | |
| .000 | .3878 | .1070 |
| 40.000 | .2449 | -.0041 |

ALPHA ( 3) = 3.960 BETA ( 1) = -7.902 MACH = .59694 Q = 595.02 P = 2385.4 RN/L = 4.8785

SECTION ( 1)BODY FLAP LOWER DEPENDENT VARIABLE CP

| X/LB | 1.0180 | 1.0460 |
|---|---|---|
| PHI | | |
| .000 | .4200 | .1110 |
| 40.000 | .3566 | .0905 |

ALPHA ( 3) = 3.964 BETA ( 2) = -3.864 MACH = .59694 Q = 595.02 P = 2385.4 RN/L = 4.3785

SECTION ( 1)BODY FLAP LOWER DEPENDENT VARIABLE CP

| X/LB | 1.0180 | 1.0460 |
|---|---|---|
| PHI | | |
| .000 | .3987 | .1061 |
| 40.000 | .3310 | .0524 |

ALPHA ( 3) = 3.969 BETA ( 3) = .189 MACH = .59694 Q = 595.02 P = 2385.4 RN/L = 4.8785

SECTION ( 1)BODY FLAP LOWER DEPENDENT VARIABLE CP

| X/LB | 1.0180 | 1.0460 |
|---|---|---|
| PHI | | |
| .000 | .3970 | .1093 |
| 40.000 | .3020 | .0415 |

ALPHA ( 3) = 3.972 BETA ( 4) = 4.243 MACH = .59694 Q = 595.02 P = 2385.4 RN/L = 4.8785

SECTION ( 1)BODY FLAP LOWER DEPENDENT VARIABLE CP

| X/LB | 1.0180 | 1.0460 |
|---|---|---|
| PHI | | |
| .000 | .4118 | .1142 |
| 40.000 | .2854 | .0261 |

AMES 11-073(OA148) -140A/B/C/R ORB BODY FLAP LWR (XE8G44)

ALPHA ( 3) = 3.982 BETA ( 5) = 8.290 MACH = .59694 Q = 595.02 P = 2385.4 RN/L = 4.8785

SECTION ( 1)BODY FLAP LOWER DEPENDENT VARIABLE CP

| X/LB | 1.0180 | 1.0460 |
|---|---|---|
| PHI | | |
| .000 | .4213 | .1170 |
| 40.000 | .2731 | .0122 |

ALPHA ( 4) = 8.025 BETA ( 1) = -7.890 MACH = .59616 Q = 593.73 P = 2386.3 RN/L = 4.8652

SECTION ( 1)BODY FLAP LOWER DEPENDENT VARIABLE CP

| X/LB | 1.0180 | 1.0460 |
|---|---|---|
| PHI | | |
| .000 | .4435 | .1144 |
| 40.000 | .3672 | .0962 |

ALPHA ( 4) = 8.036 BETA ( 2) = -3.859 MACH = .59616 Q = 593.73 P = 2386.3 RN/L = 4.8652

SECTION ( 1)BODY FLAP LOWER DEPENDENT VARIABLE CP

| X/LB | 1.0180 | 1.0460 |
|---|---|---|
| PHI | | |
| .000 | .4312 | .1240 |
| 40.000 | .3478 | .0686 |

ALPHA ( 4) = 8.040 BETA ( 3) = .178 MACH = .59616 Q = 593.73 P = 2386.3 RN/L = 4.8652

SECTION ( 1)BODY FLAP LOWER DEPENDENT VARIABLE CP

| X/LB | 1.0180 | 1.0460 |
|---|---|---|
| PHI | | |
| .000 | .4383 | .1243 |
| 40.000 | .3287 | .0507 |

ALPHA ( 4) = 8.039 BETA ( 4) = 4.241 MACH = .59616 Q = 593.73 P = 2386.3 RN/L = 4.8652

SECTION ( 1)BODY FLAP LOWER DEPENDENT VARIABLE CP

| X/LB | 1.0180 | 1.0460 |
|---|---|---|
| PHI | | |
| .000 | .4376 | .1264 |
| 40.000 | .3125 | .0395 |

AMES 11-073(OA148) -140A/B/C/R ORB BODY FLAP LWR (XE8G44)

ALPHA ( 4) = 8.038 BETA ( 5) = 8.285 MACH = .59616 Q = 593.73 P = 2386.3 RN/L = 4.8652

SECTION ( 1)BODY FLAP LOWER DEPENDENT VARIABLE CP

| X/LB | 1.0180 | 1.0460 |
|---|---|---|
| PHI | | |
| .000 | .4390 | .1202 |
| 40.000 | .2854 | .0102 |

ALPHA ( 5) = 12.021 BETA ( 1) = -7.852 MACH = .59616 Q = 593.74 P = 2386.7 RN/L = 4.8654

SECTION ( 1)BODY FLAP LOWER DEPENDENT VARIABLE CP

| X/LB | 1.0180 | 1.0460 |
|---|---|---|
| PHI | | |
| .000 | .4676 | .1355 |
| 40.000 | .3749 | .0863 |

ALPHA ( 5) = 11.932 BETA ( 2) = -3.840 MACH = .59616 Q = 593.74 P = 2386.7 RN/L = 4.8654

SECTION ( 1)BODY FLAP LOWER DEPENDENT VARIABLE CP

| X/LB | 1.0180 | 1.0460 |
|---|---|---|
| PHI | | |
| .000 | .4614 | .1318 |
| 40.000 | .3599 | .0674 |

ALPHA ( 5) = 11.946 BETA ( 3) = .176 MACH = .59616 Q = 593.74 P = 2386.7 RN/L = 4.8654

SECTION ( 1)BODY FLAP LOWER DEPENDENT VARIABLE CP

| X/LB | 1.0180 | 1.0460 |
|---|---|---|
| PHI | | |
| .000 | .4615 | .1355 |
| 40.000 | .3434 | .0532 |

ALPHA ( 5) = 11.941 BETA ( 4) = 4.247 MACH = .59616 Q = 593.74 P = 2386.7 RN/L = 4.8654

SECTION ( 1)BODY FLAP LOWER DEPENDENT VARIABLE CP

| X/LB | 1.0180 | 1.0460 |
|---|---|---|
| PHI | | |
| .000 | .4641 | .1316 |
| 40.000 | .3269 | .0394 |

AMES 11-073(OA148) -140A/B/C/R ORB BODY FLAP LWR (XEBG44)

ALPHA ( 5) = 11.928 BETA ( 5) = 8.307 MACH = .59616 Q = 593.74 P = 2386.7 RN/L = 4.8654

SECTION ( 1)BODY FLAP LOWER DEPENDENT VARIABLE CP

| X/LB | 1.0180 | 1.0460 |
|---|---|---|
| PHI | | |
| .000 | .4617 | .1256 |
| 40.000 | .2961 | .0221 |

ORIGINAL PAGE IS
OF POOR QUALITY

AMES 11-073(OA148) -140A/B/C/R ORB BODY FLAP LWF. (XE8G45) ( 05 AUG 75 )

REFERENCE DATA

SREF = 2690.0000 SQ.FT. XMRP = 1076.6800 IN. XO
LREF = 474.8000 IN. YMRP = .0000 IN. YO
BREF = 936.0680 IN. ZMRP = 375.0000 IN. ZO
SCALE = .0300

PARAMETRIC DATA

RUDDER = .000 SPDBRK = 55.000
BDFLAP = 22.500 L-ELVN = 4.000
R-ELVN = 4.000 MACH = .900

ALPHA ( 1) = -3.961 BETA ( 1) = -3.852 MACH = .89683 Q = 597.89 P = 1061.9 RN/L = 3.6441

SECTION ( 1)BODY FLAP LOWER DEPENDENT VARIABLE CP

| X/LB | 1.0180 | 1.0460 |
|---|---|---|
| PHI | | |
| .000 | .4086 | .2155 |
| 40.000 | .2661 | .1181 |

ALPHA ( 1) = -3.932 BETA ( 2) = .188 MACH = .89683 Q = 597.89 P = 1061.9 RN/L = 3.6441

SECTION ( 1)BODY FLAP LOWER DEPENDENT VARIABLE CP

| X/LB | 1.0180 | 1.0460 |
|---|---|---|
| PHI | | |
| .000 | .4321 | .2336 |
| 40.000 | .2915 | .1225 |

ALPHA ( 1) = -3.942 BETA ( 3) = 4.270 MACH = .89683 Q = 537.89 P = 1061.9 RN/L = 3.6441

SECTION ( 1)BODY FLAP LOWER DEPENDENT VARIABLE CP

| X/LB | 1.0180 | 1.0460 |
|---|---|---|
| PHI | | |
| .000 | .3877 | .2122 |
| 40.000 | .3152 | .1042 |

ALPHA ( 2) = .010 BETA ( 1) = -3.868 MACH = .89650 Q = 597.56 P = 1061.9 RN/L = 3.6228

SECTION ( 1)BODY FLAP LOWER DEPENDENT VARIABLE CP

| X/LB | 1.0180 | 1.0460 |
|---|---|---|
| PHI | | |
| .000 | .3930 | .2149 |
| 40.000 | .3425 | .1352 |

AMES 11-073(OA148) -140A/B/C/R ORB BODY FLAP LWR (XE8G45)

ALPHA ( 2) = .025 BETA ( 2) = .185 MACH = .89660 Q = 597.56 P = 1061.9 RN/L = 3.6228

SECTION ( 1)BODY FLAP LOWER DEPENDENT VARIABLE CP

| X/LB | 1.0180 | 1.0460 |
|---|---|---|
| PHI | | |
| .000 | .4226 | .2242 |
| 40.000 | .3067 | .1187 |

ALPHA ( 2) = .019 BETA ( 3) = 4.247 MACH = .89660 Q = 597.56 P = 1061.9 RN/L = 3.6228

SECTION ( 1)BODY FLAP LOWER DEPENDENT VARIABLE CP

| X/LB | 1.0180 | 1.0460 |
|---|---|---|
| PHI | | |
| .000 | .3926 | .2154 |
| 40.000 | .3057 | .1003 |

ALPHA ( 3) = 3.946 BETA ( 1) = -3.873 MACH = .89837 Q = 599.08 P = 1060.5 RN/L = 3.6099

SECTION ( 1)BODY FLAP LOWER DEPENDENT VARIABLE CP

| X/LB | 1.0180 | 1.0460 |
|---|---|---|
| PHI | | |
| .000 | .4503 | .2356 |
| 40.000 | .3730 | .1406 |

ALPHA ( 3) = 4.002 BETA ( 2) = .184 MACH = .89837 Q = 599.08 P = 1060.5 RN/L = 3.6099

SECTION ( 1)BODY FLAP LOWER DEPENDENT VARIABLE CP

| X/LB | 1.0180 | 1.0460 |
|---|---|---|
| PHI | | |
| .000 | .4529 | .2354 |
| 40.000 | .3477 | .1205 |

ALPHA ( 3) = 3.937 BETA ( 3) = 4.239 MACH = .89837 Q = 599.08 P = 1060.5 RN/L = 3.6099

SECTION ( 1)BODY FLAP LOWER DEPENDENT VARIABLE CP

| X/LB | 1.0180 | 1.0460 |
|---|---|---|
| PHI | | |
| .000 | .4599 | .2415 |
| 40.000 | .3366 | .1034 |

AMES 11-073(OA148) -140A/B/C/R ORB BODY FLAP LWR (XEBG45)

ALPHA ( 4) = 7.970 BETA ( 1) = -3.868 MACH = .89753 Q = 598.50 P = 1061.4 RN/L = 3.5937

SECTION ( 1)BODY FLAP LOWER DEPENDENT VARIABLE CP

| X/LB | 1.0180 | 1.0460 |
|---|---|---|
| PHI | | |
| .000 | .5142 | .2514 |
| 40.000 | .4025 | .1478 |

ALPHA ( 4) = 7.979 BETA ( 2) = .177 MACH = .89753 Q = 598.50 P = 1061.4 RN/L = 3.5937

SECTION ( 1)BODY FLAP LOWER DEPENDENT VARIABLE CP

| X/LB | 1.0180 | 1.0460 |
|---|---|---|
| PHI | | |
| .000 | .5156 | .2519 |
| 40.000 | .3863 | .1288 |

ALPHA ( 4) = 7.978 BETA ( 3) = 4.243 MACH = .89753 Q = 598.50 P = 1061.4 RN/L = 3.5937

SECTION ( 1)BODY FLAP LOWER DEPENDENT VARIABLE CP

| X/LB | 1.0180 | 1.0460 |
|---|---|---|
| PHI | | |
| .000 | .5148 | .2532 |
| 40.000 | .3648 | .1085 |

ALPHA ( 5) = 11.950 BETA ( 1) = -3.856 MACH = .89653 Q = 597.97 P = 1062.9 RN/L = 3.5856

SECTION ( 1)BODY FLAP LOWER DEPENDENT VARIABLE CP

| X/LB | 1.0180 | 1.0460 |
|---|---|---|
| PHI | | |
| .000 | .5549 | .2587 |
| 40.000 | .4330 | .1444 |

ALPHA ( 5) = 11.961 BETA ( 2) = .178 MACH = .89653 Q = 597.97 P = 1062.9 RN/L = 3.5856

SECTION ( 1)BODY FLAP LOWER DEPENDENT VARIABLE CP

| X/LB | 1.0180 | 1.0460 |
|---|---|---|
| PHI | | |
| .000 | .5591 | .2590 |
| 40.000 | .4187 | .1228 |

AMES 11-073(OA148) -140A/B/C/R ORB BODY FLAP LWR (XEBG45)

ALPHA ( 5) = 11.950 BETA ( 3) = 4.259 MACH = .89653 Q = 597.97 P = 1062.9 RN/L = 3.5856

SECTION ( 1)BODY FLAP LOWER DEPENDENT VARIABLE CP

| X/LB | 1.0180 | 1.0460 |
|---|---|---|
| PHI | | |
| .000 | .5585 | .2662 |
| 40.000 | .3910 | .1082 |

AMES 11-073(OA148) -140A/B/C/R ORB BODY FLAP LWR (XE8G46) ( 05 AUG 75 )

REFERENCE DATA

SREF = 2690.0000 SQ.FT. XMRP = 1076.6800 IN. XO
LREF = 474.8000 IN. YMRP = .0000 IN. YO
BREF = 936.0680 IN. ZMRP = 375.0000 IN. ZO
SCALE = .0300

PARAMETRIC DATA

RUDDER = .000 SPDBRK = 55.000
BDFLAP = 22.500 L-ELVN = 4.000
R-ELVN = 4.000 MACH = .600

ALPHA ( 1) = -4.081 BETA ( 1) = -7.851 MACH = .59592 Q = 593.39 P = 2387.4 RN/L = 4.8516

SECTION ( 1)BODY FLAP LOWER DEPENDENT VARIABLE CP

| X/LB | 1.0180 | 1.0460 |
|---|---|---|
| PHI | | |
| .000 | .3348 | .0847 |
| 40.000 | .2451 | .0319 |

ALPHA ( 1) = -3.953 BETA ( 2) = -3.833 MACH = .59592 Q = 593.39 P = 2387.4 RN/L = 4.8516

SECTION ( .)BODY FLAP LOWER DEPENDENT VARIABLE CP

| X/LB | 1.0180 | 1.0460 |
|---|---|---|
| PHI | | |
| .000 | .3505 | .0928 |
| 40.000 | .2522 | .0387 |

ALPHA ( 1) = -3.951 BETA ( 3) = .188 MACH = .59592 Q = 593.39 P = 2387.4 RN/L = 4.8516

SECTION ( 1)BODY FLAP LOWER DEPENDENT VARIABLE CP

| X/LB | 1.0180 | 1.0460 |
|---|---|---|
| PHI | | |
| .000 | .3770 | .1040 |
| 40.000 | .2276 | .0263 |

ALPHA ( 1) = -3.958 BETA ( 4) = 4.239 MACH = .59592 Q = 593.39 P = 2387.4 RN/L = 4.8516

SECTION ( 1)BODY FLAP LOWER DEPENDENT VARIABLE CP

| X/LB | 1.0180 | 1.0460 |
|---|---|---|
| PHI | | |
| .000 | .3405 | .0933 |
| 40.000 | .2401 | .0022 |

AMES 11-073(OA148) -140A/B/C/R ORB BODY FLAP LWR (XE8G46)

ALPHA ( 1) = -3.973 BETA ( 5) = 8.335 MACH = .59592 Q = 593.39 P = 2387.4 RN/L = 4.8516

SECTION ( 1)BODY FLAP LOWER DEPENDENT VARIABLE CP

| X/LB | 1.0180 | 1.0460 |
|---|---|---|
| PHI | | |
| .000 | .3324 | .0905 |
| 40.000 | .2110 | -.0136 |

ALPHA ( 2) = .060 BETA ( 1) = -7.888 MACH = .59634 Q = 594.08 P = 2386.3 RN/L = 4.8479

SECTION ( 1)BODY FLAP LOWER DEPENDENT VARIABLE CP

| X/LB | 1.0180 | 1.0460 |
|---|---|---|
| PHI | | |
| .000 | .3855 | .1009 |
| 40.000 | .2948 | .0592 |

ALPHA ( 2) = .070 BETA ( 2) = -3.865 MACH = .59634 Q = 594.08 P = 2386.3 RN/L = 4.8479

SECTION ( 1)BODY FLAP LOWER DEPENDENT VARIABLE CP

| X/LB | 1.0180 | 1.0460 |
|---|---|---|
| PHI | | |
| .000 | .3598 | .0968 |
| 40.000 | .2869 | .0416 |

ALPHA ( 2) = .070 BETA ( 3) = .181 MACH = .59634 Q = 594.08 P = 2386.3 RN/L = 4.8479

SECTION ( 1)BODY FLAP LOWER DEPENDENT VARIABLE CP

| X/LB | 1.0180 | 1.0460 |
|---|---|---|
| PHI | | |
| .000 | .3704 | .0996 |
| 40.000 | .2555 | .0199 |

ALPHA ( 2) = .068 BETA ( 4) = 4.248 MACH = .59634 Q = 594.08 P = 2386.3 RN/L = 4.8479

SECTION ( 1)BODY FLAP LOWER DEPENDENT VARIABLE CP

| X/LB | 1.0180 | 1.0460 |
|---|---|---|
| PHI | | |
| .000 | .3651 | .1037 |
| 40.000 | .2374 | -.0006 |

AMES 11-073(OA148) -140A/B/C/R ORB BODY FLAP LWR (XE8G46)

ALPHA ( 2) = .063 BETA ( 5) = 8.306 MACH = .59634 Q = 594.08 P = 2386.3 RN/L = 4.8479

SECTION ( 1)BODY FLAP LOWER DEPENDENT VARIABLE CP

| X/LB | 1.0180 | 1.0460 |
|---|---|---|
| PHI | | |
| .000 | .3839 | .1001 |
| 40.000 | .2221 | -.0177 |

ALPHA ( 3) = 4.012 BETA ( 1) = -7.901 MACH = .59704 Q = 595.39 P = 2386.0 RN/L = 4.8469

SECTION ( 1)BODY FLAP LOWER DEPENDENT VARIABLE CP

| X/LB | 1.0180 | 1.0460 |
|---|---|---|
| PHI | | |
| .000 | .4156 | .1109 |
| 40.000 | .3241 | .0694 |

ALPHA ( 3) = 4.016 BETA ( 2) = -3.862 MACH = .59704 Q = 595.39 P = 2386.0 RN/L = 4.8469

SECTION ( 1)BODY FLAP LOWER DEPENDENT VARIABLE CP

| X/LB | 1.0180 | 1.0460 |
|---|---|---|
| PHI | | |
| .000 | .3976 | .1087 |
| 40.000 | .3047 | .0488 |

ALPHA ( 3) = 4.027 BETA ( 3) = .191 MACH = .59704 Q = 595.39 P = 2386.0 RN/L = 4.8469

SECTION ( 1)BODY FLAP LOWER DEPENDENT VARIABLE CP

| X/LB | 1.0180 | 1.0460 |
|---|---|---|
| PHI | | |
| .000 | .3943 | .1103 |
| 40.000 | .2727 | .0259 |

ALPHA ( 3) = 4.030 BETA ( 4) = 4.239 MACH = .59704 Q = 595.39 P = 2386.0 RN/L = 4.8469

SECTION ( 1)BODY FLAP LOWER DEPENDENT VARIABLE CP

| X/LB | 1.0180 | 1.0460 |
|---|---|---|
| PHI | | |
| .000 | .4021 | .1136 |
| 40.000 | .2590 | .0085 |

AMES 11-073(OA148) -140A/B/C/R ORB BODY FLAP LWR (XE8G46)

ALPHA ( 3) = 4.035 BETA ( 5) = 8.288 MACH = .59704 Q = 595.39 P = 2386.0 RN/L = 4.8469

SECTION ( 1)BODY FLAP LOWER DEPENDENT VARIABLE CP

| X/LB | 1.0180 | 1.0460 |
|---|---|---|
| PHI | | |
| .000 | .4131 | .1104 |
| 40.000 | .2496 | .0024 |

ALPHA ( 4) = 7.996 BETA ( 1) = -7.892 MACH = .59670 Q = 594.93 P = 2387.1 RN/L = 4.8410

SECTION ( 1)BODY FLAP LOWER DEPENDENT VARIABLE CP

| X/LB | 1.0180 | 1.0460 |
|---|---|---|
| PHI | | |
| .000 | .4394 | .1209 |
| 40.000 | .3411 | .0770 |

ALPHA ( 4) = 6.007 BETA ( 2) = -3.861 MACH = .59670 Q = 594.93 P = 2387.1 RN/L = 4.8410

SECTION ( 1)BODY FLAP LOWER DEPENDENT VARIABLE CP

| X/LB | 1.0180 | 1.0460 |
|---|---|---|
| PHI | | |
| .000 | .4297 | .1190 |
| 40.000 | .3170 | .0601 |

ALPHA ( 4) = 6.012 BETA ( 3) = .176 MACH = .59670 Q = 594.93 P = 2387.1 RN/L = 4.8410

SECTION ( 1)BODY FLAP LOWER DEPENDENT VARIABLE CP

| X/LB | 1.0180 | 1.0460 |
|---|---|---|
| PHI | | |
| .000 | .4282 | .1208 |
| 40.000 | .2974 | .0409 |

ALPHA ( 4) = 8.012 BETA ( 4) = 4.240 MACH = .59670 Q = 594.93 P = 2387.1 RN/L = 4.8410

SECTION ( 1)BODY FLAP LOWER DEPENDENT VARIABLE CP

| X/LB | 1.0180 | 1.0460 |
|---|---|---|
| PHI | | |
| .000 | .4306 | .1229 |
| 40.000 | .2781 | .0133 |

ORIGINAL PAGE IS
OF POOR QUALITY

AMES 11-073(OA148) -140A/B/C/R ORB BODY FLAP LWR (XEBG46)

ALPHA ( 4) = 8.009 BETA ( 5) = 8.293 MACH = .59670 Q = 594.93 P = 2387.1 RN/L = 4.8410

SECTION ( 1)BODY FLAP LOWER DEPENDENT VARIABLE CP

| X/LB | 1.0180 | 1.0460 |
|---|---|---|
| PHI | | |
| .000 | .4366 | .1194 |
| 40.000 | .2578 | .0027 |

ALPHA ( 5) = 11.987 BETA ( 1) = -7.852 MACH = .59692 Q = 595.28 P = 2386.8 RN/L = 4.8363

SECTION ( 1)BODY FLAP LOWER DEPENDENT VARIABLE CP

| X/LB | 1.0180 | 1.0460 |
|---|---|---|
| PHI | | |
| .000 | .4635 | .1324 |
| 40.000 | .3592 | .0866 |

ALPHA ( 5) = 12.008 BETA ( 2) = -3.842 MACH = .59692 Q = 595.28 P = 2386.8 RN/L = 4.8363

SECTION ( 1)BODY FLAP LOWER DEPENDENT VARIABLE CP

| X/LB | 1.0180 | 1.0460 |
|---|---|---|
| PHI | | |
| .000 | .4569 | .1342 |
| 40.000 | .3373 | .0577 |

ALPHA ( 5) = 12.016 BETA ( 3) = .174 MACH = .59692 Q = 595.28 P = 2386.8 RN/L = 4.8363

SECTION ( 1)BODY FLAP LOWER DEPENDENT VARIABLE CP

| X/LB | 1.0180 | 1.0460 |
|---|---|---|
| PHI | | |
| .000 | .4589 | .1375 |
| 40.000 | .3211 | .0524 |

ALPHA ( 5) = 11.917 BETA ( 4) = 4.245 MACH = .59692 Q = 595.28 P = 2386.8 RN/L = 4.8363

SECTION ( 1)BODY FLAP LOWER DEPENDENT VARIABLE CP

| X/LB | 1.0180 | 1.0460 |
|---|---|---|
| PHI | | |
| .000 | .4627 | .1359 |
| 40.000 | .2952 | .0216 |

AMES 11-073(OA148) -140A/B/C/R ORB BODY FLAP LWR (XEB345)

ALPHA ( 5) = 11.904 BETA ( 5) = 8.309 MACH = .59692 Q = 595.28 P = 2385.5 RN/L = 4.8363

SECTION ( 1)BODY FLAP LOWER DEPENDENT VARIABLE CP

| X/LB | 1.0180 | 1.0450 |
|---|---|---|
| PHI | | |
| .000 | .4588 | .1334 |
| 40.000 | .2765 | .0034 |

AMES 11-073(OA148) -140A/B/C/R ORB BODY FLAP LWR (XE8G47) ( 05 AUG 75 )

REFERENCE DATA

SREF = 2690.0000 SQ.FT. XMRP = 1075.6800 IN. XO
LREF = 474.8000 IN. YMRP = .0000 IN. YO
BREF = 936.0680 IN. ZMRP = 375.0000 IN. ZO
SCALE = .0300

PARAMETRIC DATA

RUDDER = -10.000 SPDBRK = 85.000
BDFLAP = 16.300 L-ELVN = 4.000
R-ELVN = 4.000 MACH = 1.400

ALPHA ( 1) = -4.021 BETA ( 1) = -3.852 MACH = 1.3993 Q = 600.40 P = 438.06 RN/L = 2.9180

SECTION ( 1)BODY FLAP LOWER DEPENDENT VARIABLE CP

| X/LB | 1.0180 | 1.0460 |
|---|---|---|
| PHI | | |
| .000 | .1963 | .1975 |
| 40.000 | .0699 | .0222 |

ALPHA ( 1) = -4.015 BETA ( 2) = .189 MACH = 1.3993 Q = 600.40 P = 438.06 RN/L = 2.9180

SECTION ( 1)BODY FLAP LOWER DEPENDENT VARIABLE CP

| X/LB | 1.0180 | 1.0460 |
|---|---|---|
| PHI | | |
| .000 | .1867 | .1956 |
| 40.000 | .1185 | .0367 |

ALPHA ( 1) = -4.023 BETA ( 3) = 4.275 MACH = 1.3993 Q = 600.40 P = 438.06 RN/L = 2.9180

SECTION ( 1)BODY FLAP LOWER DEPENDENT VARIABLE CP

| X/LB | 1.0180 | 1.0460 |
|---|---|---|
| PHI | | |
| .000 | .1906 | .1871 |
| 40.000 | .1167 | .0732 |

ALPHA ( 2) = -.011 BETA ( 1) = -3.871 MACH = 1.3999 Q = 600.31 P = 437.59 RN/L = 2.9188

SECTION ( 1)BODY FLAP LOWER DEPENDENT VARIABLE CP

| X/LB | 1.0180 | 1.0460 |
|---|---|---|
| PHI | | |
| .000 | .2426 | .2341 |
| 40.000 | .1537 | .1089 |

AMES 11-073(OA148) -140A/B/C/R ORB BODY FLAP LWR (XE8G47)

ALPHA ( 2) = -.002 BETA ( 2) = .186 MACH = 1.3999 Q = 600.31 P = 437.59 RN/L = 2.9188

SECTION ( 1)BODY FLAP LOWER DEPENDENT VARIABLE CP

| X/LB | 1.0180 | 1.0460 |
|---|---|---|
| PHI | | |
| .000 | .2501 | .2373 |
| 40.000 | .1524 | .0898 |

ALPHA ( 2) = -.007 BETA ( 3) = 4.251 MACH = 1.3999 Q = 600.31 P = 437.59 RN/L = 2.9188

SECTION ( 1)BODY FLAP LOWER DEPENDENT VARIABLE CP

| X/LB | 1.0180 | 1.0460 |
|---|---|---|
| PHI | | |
| .000 | .2422 | .2268 |
| 40.000 | .1617 | .1012 |

ALPHA ( 3) = 3.927 BETA ( 1) = -3.876 MACH = 1.3955 Q = 600.04 P = 440.18 RN/L = 2.9202

SECTION ( 1)BODY FLAP LOWER DEPENDENT VARIABLE CP

| X/LB | 1.0180 | 1.0460 |
|---|---|---|
| PHI | | |
| .000 | .3381 | .3155 |
| 40.000 | .2446 | .1897 |

ALPHA ( 3) = 3.927 BETA ( 2) = .191 MACH = 1.3955 Q = 600.04 P = 440.18 RN/L = 2.9202

SECTION ( 1)BODY FLAP LOWER DEPENDENT VARIABLE CP

| X/LB | 1.0180 | 1.0460 |
|---|---|---|
| PHI | | |
| .000 | .3382 | .3098 |
| 40.000 | .2429 | -.1773 |

ALPHA ( 3) = 3.930 BETA ( 3) = 4.244 MACH = 1.3955 Q = 600.04 P = 440.18 RN/L = 2.9202

SECTION ( 1)BODY FLAP LOWER DEPENDENT VARIABLE CP

| X/LB | 1.0180 | 1.0460 |
|---|---|---|
| PHI | | |
| .000 | .3443 | .3185 |
| 40.000 | .2404 | .1808 |

AMES 11-073(OA148) -140A/B/C/R ORB BODY FLAP LWR (XE8G47)

ALPHA ( 4) = 7.863 BETA ( 1) = -3.871 MACH = 1.3954 Q = 600.24 P = 440.41 RN/L = 2.9228

SECTION ( 1)BODY FLAP LOWER DEPENDENT VARIABLE CP

| X/LB | 1.0180 | 1.0460 |
|---|---|---|
| PHI | | |
| .000 | .4493 | .4011 |
| 40.000 | .3699 | .2636 |

ALPHA ( 4) = 7.994 BETA ( 2) = .174 MACH = 1.3954 Q = 600.24 P = 440.41 RN/L = 2.9228

SECTION ( 1)BODY FLAP LOWER DEPENDENT VARIABLE CP

| X/LB | 1.0180 | 1.0460 |
|---|---|---|
| PHI | | |
| .000 | .4439 | .3917 |
| 40.000 | .3470 | .2516 |

ALPHA ( 4) = 7.994 BETA ( 3) = 4.239 MACH = 1.3954 Q = 600.24 P = 440.41 RN/L = 2.9228

SECTION ( 1)BODY FLAP LOWER DEPENDENT VARIABLE CP

| X/LB | 1.0180 | 1.0460 |
|---|---|---|
| PHI | | |
| .000 | .4488 | .3978 |
| 40.000 | .3304 | .2536 |

ALPHA ( 5) = 11.867 BETA ( 1) = -3.858 MACH = 1.3955 Q = 600.34 P = 440.41 RN/L = 2.9245

SECTION ( 1)BODY FLAP LOWER DEPENDENT VARIABLE CP

| X/LB | 1.0180 | 1.0460 |
|---|---|---|
| PHI | | |
| .000 | .5585 | .4648 |
| 40.000 | .4382 | .2914 |

ALPHA ( 5) = 11.873 BETA ( 2) = .176 MACH = 1.3955 Q = 600.34 P = 440.41 RN/L = 2.9245

SECTION ( 1)BODY FLAP LOWER DEPENDENT VARIABLE CP

| X/LB | 1.0180 | 1.0460 |
|---|---|---|
| PHI | | |
| .000 | .5520 | .4536 |
| 40.000 | .4255 | .3050 |

AMES 11-073(OA148) -140A/B/C/R ORB BODY FLAP LWR (XEBG47)

ALPHA ( 5) = 11.868 BETA ( 3) = 4.257 MACH = 1.3955 Q = 600.34 P = 440.41 RN/L = 2.9245

SECTION ( 1)BODY FLAP LOWER DEPENDENT VARIABLE CP

| X/LB | 1.0180 | 1.0460 |
|---|---|---|
| PHI | | |
| .000 | .5559 | .4684 |
| 40.000 | .4181 | .3151 |

ALPHA ( 6) = 15.839 BETA ( 1) = -3.834 MACH = 1.3943 Q = 600.32 P = 441.12 RN/L = 2.9229

SECTION ( 1)BODY FLAP LOWER DEPENDENT VARIABLE CP

| X/LB | 1.0180 | 1.0460 |
|---|---|---|
| PHI | | |
| .000 | .6551 | .5225 |
| 40.000 | .4953 | .3355 |

ALPHA ( 6) = 15.851 BETA ( 2) = .174 MACH = 1.3943 Q = 600.32 P = 441.12 RN/L = 2.9229

SECTION ( 1)BODY FLAP LOWER DEPENDENT VARIABLE CP

| X/LB | 1.0180 | 1.0460 |
|---|---|---|
| PHI | | |
| .000 | .6532 | .5241 |
| 40.000 | .5002 | .3517 |

ALPHA ( 6) = 15.843 BETA ( 3) = 4.283 MACH = 1.3943 Q = 600.32 P = 441.12 RN/L = 2.9229

SECTION ( 1)BODY FLAP LOWER DEPENDENT VARIABLE CP

| X/LB | 1.0180 | 1.0460 |
|---|---|---|
| PHI | | |
| .000 | .6534 | .5255 |
| 40.000 | .4929 | .3681 |

ORIGINAL PAGE IS
OF POOR QUALITY

AMES 11-073(OA148) -140A/B/C/R ORB BODY FLAP LWR (XE8G48) ( 05 AUG 75 )

REFERENCE DATA

SREF = 2690.0000 SQ.FT. XMRP = 1076.6800 IN. XO
LREF = 474.8000 IN. YMRP = .0000 IN. YO
BREF = 936.0680 IN. ZMRP = 375.0000 IN. ZO
SCALE = .0300

PARAMETRIC DATA

RUDDER = -10.000 SPDBRK = 85.000
BDFLAP = 16.300 L-ELVN = 4.000
R-ELVN = 4.000 MACH = 1.250

ALPHA ( 1) = -4.024 BETA ( 1) = -3.849 MACH = 1.2475 Q = 600.37 P = 551.11 RN/L = 3.0241

SECTION ( 1)BODY FLAP LOWER DEPENDENT VARIABLE CP

| X/LB | 1.0180 | 1.0460 |
|---|---|---|
| PHI | | |
| .000 | .2222 | .1837 |
| 40.000 | .0742 | .0357 |

ALPHA ( 1) = -4.005 BETA ( 2) = .189 MACH = 1.2475 Q = 600.37 P = 551.11 RN/L = 3.0241

SECTION ( 1)BODY FLAP LOWER DEPENDENT VARIABLE CP

| X/LB | 1.0180 | 1.0460 |
|---|---|---|
| PHI | | |
| .000 | .2104 | .1996 |
| 40.000 | .0766 | .0366 |

ALPHA ( 1) = -4.015 BETA ( 3) = 4.273 MACH = 1.2475 Q = 600.37 P = 551.11 RN/L = 3.0241

SECTION ( 1)BODY FLAP LOWER DEPENDENT VARIABLE CP

| X/LB | 1.0180 | 1.0460 |
|---|---|---|
| PHI | | |
| .000 | .2118 | .1768 |
| 40.000 | .1121 | .0547 |

ALPHA ( 2) = .012 BETA ( 1) = -3.869 MACH = 1.2460 Q = 599.92 P = 552.04 RN/L = 3.0247

SECTION ( 1)BODY FLAP LOWER DEPENDENT VARIABLE CP

| X/LB | 1.0180 | 1.0460 |
|---|---|---|
| PHI | | |
| .000 | .2611 | .2226 |
| 40.000 | .1687 | .1111 |

AMES 11-073(OA148) -140A/B/C/R ORB BODY FLAP LWR (XEBG48)

ALPHA ( 2) = .020 BETA ( 2) = .189 MACH = 1.2460 Q = 599.92 P = 552.04 RN/L = 3.0247

SECTION ( 1)BODY FLAP LOWER DEPENDENT VARIABLE CP

| X/LB | 1.0180 | 1.0460 |
|---|---|---|
| PHI | | |
| .000 | .2804 | .2355 |
| 40.000 | .1457 | .0781 |

ALPHA ( 2) = .014 BETA ( 3) = 4.249 MACH = 1.2460 Q = 599.92 P = 552.04 RN/L = 3.0247

SECTION ( 1)BODY FLAP LOWER DEPENDENT VARIABLE CP

| X/LB | 1.0180 | 1.0460 |
|---|---|---|
| PHI | | |
| .000 | .2603 | .2237 |
| 40.000 | .1631 | .0829 |

ALPHA ( 3) = 3.951 BETA ( 1) = -3.873 MACH = 1.2462 Q = 600.16 P = 552.05 RN/L = 3.0262

SECTION ( 1)BODY FLAP LOWER DEPENDENT VARIABLE CP

| X/LB | 1.0180 | 1.0460 |
|---|---|---|
| PHI | | |
| .000 | .3715 | .3022 |
| 40.000 | .2585 | .1845 |

ALPHA ( 3) = 3.950 BETA ( 2) = .185 MACH = 1.2462 Q = 600.16 P = 552.05 RN/L = 3.0262

SECTION ( 1)BODY FLAP LOWER DEPENDENT VARIABLE CP

| X/LB | 1.0180 | 1.0460 |
|---|---|---|
| PHI | | |
| .000 | .3728 | .2395 |
| 40.000 | .2529 | .1609 |

ALPHA ( 3) = 3.964 BETA ( 3) = 4.240 MACH = 1.2462 Q = 600.16 P = 552.05 RN/L = 3.0262

SECTION ( 1)BODY FLAP LOWER DEPENDENT VARIABLE CP

| X/LB | 1.0180 | 1.0460 |
|---|---|---|
| PHI | | |
| .000 | .3736 | .3049 |
| 40.000 | .2516 | .1536 |

AMES 11-073(OA148) -140A/B/C/R ORB BODY FLAP LWR (XE8G48)

ALPHA ( 4) = 7.898 BETA ( 1) = -3.868 MACH = 1.2462 Q = 600.16 P = 552.05 RN/L = 3.0273

SECTION ( 1)BODY FLAP LOWER DEPENDENT VARIABLE CP

| X/LB | 1.0180 | 1.0460 |
|---|---|---|
| PHI | | |
| .000 | .4749 | .3689 |
| 40.000 | .3745 | .2329 |

ALPHA ( 4) = 8.000 BETA ( 2) = .178 MACH = 1.2462 Q = 600.16 P = 552.05 RN/L = 3.0273

SECTION ( 1)BODY FLAP LOWER DEPENDENT VARIABLE CP

| X/LB | 1.0180 | 1.0460 |
|---|---|---|
| PHI | | |
| .000 | .4757 | .3640 |
| 40.000 | .3500 | .2182 |

ALPHA ( 4) = 8.003 BETA ( 3) = 4.235 MACH = 1.2462 Q = 600.16 P = 552.05 RN/L = 3.0273

SECTION ( 1)BODY FLAP LOWER DEPENDENT VARIABLE CP

| X/LB | 1.0180 | 1.0460 |
|---|---|---|
| PHI | | |
| .000 | .4779 | .3698 |
| 40.000 | .3382 | .2137 |

ALPHA ( 5) = 11.933 BETA ( 1) = -3.854 MACH = 1.2450 Q = 599.95 P = 552.98 RN/L = 3.0281

SECTION ( 1)BODY FLAP LOWER DEPENDENT VARIABLE CP

| X/LB | 1.0180 | 1.0460 |
|---|---|---|
| PHI | | |
| .000 | .5654 | .4175 |
| 40.000 | .4354 | .2604 |

ALPHA ( 5) = 11.941 BETA ( 2) = .176 MACH = 1.2450 Q = 599.95 P = 552.98 RN/L = 3.0281

SECTION ( 1)BODY FLAP LOWER DEPENDENT VARIABLE CP

| X/LB | 1.0180 | 1.0460 |
|---|---|---|
| PHI | | |
| .000 | .5628 | .4123 |
| 40.000 | .4141 | .2610 |

AMES 11-073(OA148) -140A/B/C/R ORB BODY FLAP LWR (XE8G48)

ALPHA ( 5) = 11.936 BETA ( 3) = 4.253 MACH = 1.2450 Q = 599.95 P = 552.98 RN/L = 3.0281

SECTION ( 1)BODY FLAP LOWER DEPENDENT VARIABLE CP

| X/LB | 1.0180 | 1.0460 |
|---|---|---|
| PHI | | |
| .000 | .5601 | .4173 |
| 40.000 | .4091 | .2529 |

AMES 11-073(OA148) -140A/B/C/R ORB BODY FLAP LWR (XE8G49) ( 05 AUG 75 )

REFERENCE DATA

SREF = 2690.0000 SQ.FT. XMRP = 1076.6800 IN. XO
LREF = 474.8000 IN. YMRP = .0000 IN. YO
BREF = 936.0680 IN. ZMRP = 375.0000 IN. ZO
SCALE = .0300

PARAMETRIC DATA

RUDDER = -10.000 SPDBRK = 85.000
BDFLAP = 16.300 L-ELVN = 4.000
R-ELVN = 4.000 MACH = 1.100

ALPHA ( 1) = -4.022 BETA ( 1) = -3.848 MACH = 1.1001 Q = 600.26 P = 708.59 RN/L = 3.1930

SECTION ( 1)BODY FLAP LOWER DEPENDENT VARIABLE CP

| X/LB | 1.0180 | 1.0460 |
|---|---|---|
| PHI | | |
| .000 | .2628 | .1893 |
| 40.000 | .1273 | .0789 |

ALPHA ( 1) = -4.022 BETA ( 2) = .189 MACH = 1.1001 Q = 600.26 P = 708.59 RN/L = 3.1930

SECTION ( 1)BODY FLAP LOWER DEPENDENT VARIABLE CP

| X/LB | 1.0180 | 1.0450 |
|---|---|---|
| PHI | | |
| .000 | .2690 | .2146 |
| 40.000 | .1168 | .0775 |

ALPHA ( 1) = -4.029 BETA ( 3) = 4.271 MACH = 1.1001 Q = 600.26 P = 708.59 RN/L = 3.1930

SECTION ( 1)BODY FLAP LOWER DEPENDENT VARIABLE CP

| X/LB | 1.0180 | 1.0460 |
|---|---|---|
| PHI | | |
| .000 | .2357 | .1826 |
| 40.000 | .1259 | .0623 |

ALPHA ( 2) = .025 BETA ( 1) = -3.866 MACH = 1.1003 Q = 600.53 P = 708.60 RN/L = 3.1951

SECTION ( 1)BODY FLAP LOWER DEPENDENT VARIABLE CP

| X/LB | 1.0180 | 1.0460 |
|---|---|---|
| PHI | | |
| .000 | .2932 | .2102 |
| 40.000 | .2187 | .1210 |

AMES 11-073(CA148) -140A/B/C/R ORB BODY FLAP LWR (XE8G49)

ALPHA ( 2) = .030 BETA ( 2) = .186 MACH = 1.1003 Q = 600.53 P = 708.60 RN/L = 3.1951

SECTION ( 1)BODY FLAP LOWER DEPENDENT VARIABLE CP

| X/LB | 1.0180 | 1.0460 |
|---|---|---|
| PHI | | |
| .000 | .3423 | .2359 |
| 40.000 | .1991 | .1077 |

ALPHA ( 2) = .026 BETA ( 3) = 4.247 MACH = 1.1003 Q = 600.53 P = 708.60 RN/L = 3.1951

SECTION ( 1)BODY FLAP LOWER DEPENDENT VARIABLE CP

| X/LB | 1.0180 | 1.0460 |
|---|---|---|
| PHI | | |
| .000 | .2831 | .2114 |
| 40.000 | .1785 | .0832 |

ALPHA ( 3) = 3.995 BETA ( 1) = -3.867 MACH = 1.1004 Q = 600.49 P = 708.37 RN/L = 3.1949

SECTION ( 1)BODY FLAP LOWER DEPENDENT VARIABLE CP

| X/LB | 1.0180 | 1.0460 |
|---|---|---|
| PHI | | |
| .000 | .3950 | .2584 |
| 40.000 | .2840 | .1512 |

ALPHA ( 3) = 3.996 BETA ( 2) = .185 MACH = 1.1004 Q = 600.49 P = 708.37 RN/L = 3.1949

SECTION ( 1)BODY FLAP LOWER DEPENDENT VARIABLE CP

| X/LB | 1.0180 | 1.0460 |
|---|---|---|
| PHI | | |
| .000 | .4089 | .2711 |
| 40.000 | .2826 | .1432 |

ALPHA ( 3) = 3.999 BETA ( 3) = 4.239 MACH = 1.1004 Q = 600.49 P = 708.37 RN/L = 3.1949

SECTION ( 1)BODY FLAP LOWER DEPENDENT VARIABLE CP

| X/LB | 1.0180 | 1.0460 |
|---|---|---|
| PHI | | |
| .000 | .3909 | .2651 |
| 40.000 | .2625 | .1261 |

ORIGINAL PAGE IS OF POOR QUALITY

AMES 11-073(OA148) -140A/B/C/R ORB BODY FLAP LWR (XE8G49)

ALPHA ( 4) = 7.942 BETA ( 1) = -3.865 MACH = 1.1006 Q = 600.80 P = 708.61 RN/L = 3.1953

SECTION ( 1)BODY FLAP LOWER DEPENDENT VARIABLE CP

| X/LB | 1.0180 | 1.0460 |
|---|---|---|
| PHI | | |
| .000 | .4791 | .3004 |
| 40.000 | .3461 | .1650 |

ALPHA ( 4) = 8.042 BETA ( 2) = .178 MACH = 1.1006 Q = 600.80 P = 708.61 RN/L = 3.1953

SECTION ( 1)BODY FLAP LOWER DEPENDENT VARIABLE CP

| X/LB | 1.0180 | 1.0460 |
|---|---|---|
| PHI | | |
| .000 | .4832 | .3023 |
| 40.000 | .3517 | .1604 |

ALPHA ( 4) = 8.044 BETA ( 3) = 4.232 MACH = 1.1006 Q = 600.80 P = 708.61 RN/L = 3.1953

SECTION ( 1)BODY FLAP LOWER DEPENDENT VARIABLE CP

| X/LB | 1.0180 | 1.0460 |
|---|---|---|
| PHI | | |
| .000 | .4777 | .3027 |
| 40.000 | .3355 | .1516 |

ALPHA ( 5) = 11.980 BETA ( 1) = -3.845 MACH = 1.0980 Q = 599.65 P = 710.48 RN/L = 3.1930

SECTION ( 1)BODY FLAP LOWER DEPENDENT VARIABLE CP

| X/LB | 1.0180 | 1.0460 |
|---|---|---|
| PHI | | |
| .000 | .5448 | .3253 |
| 40.000 | .4177 | .1805 |

ALPHA ( 5) = 11.986 BETA ( 2) = .181 MACH = 1.0980 Q = 599.65 P = 710.48 RN/L = 3.1930

SECTION ( 1)BODY FLAP LOWER DEPENDENT VARIABLE CP

| X/LB | 1.0180 | 1.0460 |
|---|---|---|
| PHI | | |
| .000 | .5483 | .3308 |
| 40.000 | .4107 | .1779 |

AMES 11-073(OA148) -140A/B/C/R ORB BODY FLAP LWR (XE8G49)

ALPHA ( 5) = 11.992 BETA ( 3) = 4.250 MACH = 1.0980 Q = 599.65 P = 710.48 RN/L = 3.1930

SECTION ( 1)BODY FLAP LOWER DEPENDENT VARIABLE CP

| X/LB | 1.0180 | 1.0460 |
|---|---|---|
| PHI | | |
| .000 | .5486 | .3299 |
| 40.000 | .3876 | .1659 |

AMES 11-073(OA148) -140A/B/C/R ORB BODY FLAP LWR (XEBG50) ( 05 AUG 75 )

REFERENCE DATA

SREF = 2690.0000 SQ.FT. XMRP = 1076.6800 IN. XO
LREF = 474.9000 IN. YMRP = .0000 IN. YO
BREF = 936.0000 IN ZMRP = 375.0000 IN. ZO
SCALE = .0300

PARAMETRIC DATA

RUDDER = -10.000 SPDBRK = 85.000
BDFLAP = 15.300 L-ELVN = 4.000
R-ELVN = 4.000 MACH = .900

ALPHA ( 1) = -4.039 BETA ( 1) = -3.850 MACH = .89970 Q = 599.92 P = 1058.7 RN/L = 3.5763

SECTION ( 1)BODY FLAP LOWER DEPENDENT VARIABLE CP

| X/LB | 1.0180 | 1.0460 |
|---|---|---|
| PHI | | |
| .000 | .3003 | .0893 |
| 40.000 | .1768 | .0045 |

ALPHA ( 1) = -4.026 BETA ( 2) = .188 MACH = .89970 Q = 599.92 P = 1058.7 RN/L = 3.5763

SECTION ( 1)BODY FLAP LOWER DEPENDENT VARIABLE CP

| X/LB | 1.0180 | 1.0460 |
|---|---|---|
| PHI | | |
| .000 | .3260 | .1077 |
| 40.000 | .1620 | -.0016 |

ALPHA ( 1) = -4.037 BETA ( 3) = 4.257 MACH = .89970 Q = 599.92 P = 1058.7 RN/L = 3.5763

SECTION ( 1)BODY FLAP LOWER DEPENDENT VARIABLE CP

| X/LB | 1.0180 | 1.0460 |
|---|---|---|
| PHI | | |
| .000 | .2881 | .0869 |
| 40.000 | .1924 | -.0232 |

ALPHA ( 2) = .032 BETA ( 1) = -3.867 MACH = .89853 Q = 599.04 P = 1060.0 RN/L = 3.5758

SECTION ( 1)BODY FLAP LOWER DEPENDENT VARIABLE CP

| X/LB | 1.0180 | 1.0460 |
|---|---|---|
| PHI | | |
| .000 | .2960 | .0909 |
| 40.000 | .2138 | .0181 |

AMES 11-073(0A148) -140A/B/C/R ORB BODY FLAP LWR (XE8G5D)

ALPHA ( 2) = .035 BETA ( 2) = .184 MACH = .89853 Q = 599.04 P = 1060.0 RN/L = 3.5758

SECTION ( 1)BODY FLAP LOWER DEPENDENT VARIABLE CP

| X/LB | 1.0180 | 1.0460 |
|---|---|---|
| PHI | | |
| .000 | .3142 | .0924 |
| 40.000 | .1799 | -.0157 |

ALPHA ( 2) = .028 BETA ( 3) = 4.248 MACH = .89853 Q = 599.04 P = 1060.0 RN/L = 3.5758

SECTION ( 1)BODY FLAP LOWER DEPENDENT VARIABLE CP

| X/LB | 1.0180 | 1.0460 |
|---|---|---|
| PHI | | |
| .000 | .2967 | .0940 |
| 40.000 | .1935 | -.0319 |

ALPHA ( 3) = 3.999 BETA ( 1) = -3.868 MACH = .90073 Q = 600.62 P = 1057.6 RN/L = 3.5790

SECTION ( 1)BODY FLAP LOWER DEPENDENT VARIABLE CP

| X/LB | 1.0180 | 1.0460 |
|---|---|---|
| PHI | | |
| .000 | .3517 | .1071 |
| 40.000 | .2392 | .0298 |

ALPHA ( 3) = 4.003 BETA ( 2) = .184 MACH = .90073 Q = 600.62 P = 1057.6 RN/L = 3.5790

SECTION ( 1)BODY FLAP LOWER DEPENDENT VARIABLE CP

| X/LB | 1.0180 | 1.0460 |
|---|---|---|
| PHI | | |
| .000 | .3470 | .1070 |
| 40.000 | .2131 | -.0069 |

ALPHA ( 3) = 4.005 BETA ( 3) = 4.239 MACH = .90073 Q = 600.62 P = 1057.6 RN/L = 3.5790

SECTION ( 1)BODY FLAP LOWER DEPENDENT VARIABLE CP

| X/LB | 1.0180 | 1.0460 |
|---|---|---|
| PHI | | |
| .000 | .3509 | .1097 |
| 40.000 | .2016 | -.0287 |

AMES 11-073(OA148) -140A/B/C/R ORB BODY FLAP LWR (XE8G50)

ALPHA ( 4) = 8.040 BETA ( 1) = -3.870 MACH = .89937 Q = 599.61 P = 1059.0 RN/L = 3.5771

SECTION ( 1)BODY FLAP LOWER DEPENDENT VARIABLE CP

| X/LB | 1.0180 | 1.0460 |
|---|---|---|
| PHI | | |
| .000 | .3854 | .1214 |
| 40.000 | .2513 | .0365 |

ALPHA ( 4) = 8.045 BETA ( 2) = .178 MACH = .89937 Q = 599.61 P = 1059.0 RN/L = 3.5771

SECTION ( 1)BODY FLAP LOWER DEPENDENT VARIABLE CP

| X/LB | 1.0180 | 1.0460 |
|---|---|---|
| PHI | | |
| .000 | .3923 | .1202 |
| 40.000 | .2376 | .0072 |

ALPHA ( 4) = 8.043 BETA ( 3) = 4.236 MACH = .89937 Q = 599.61 P = 1059.0 RN/L = 3.5771

SECTION ( 1)BODY FLAP LOWER DEPENDENT VARIABLE CP

| X/LB | 1.0180 | 1.0460 |
|---|---|---|
| PHI | | |
| .000 | .3958 | .1225 |
| 40.000 | .2237 | -.0203 |

ALPHA ( 5) = 11.980 BETA ( 1) = -3.854 MACH = .89910 Q = 599.28 P = 1059.0 RN/L = 3.5742

SECTION ( 1)BODY FLAP LOWER DEPENDENT VARIABLE CP

| X/LB | 1.0180 | 1.0460 |
|---|---|---|
| PHI | | |
| .000 | .4137 | .1292 |
| 40.000 | .2753 | .0269 |

ALPHA ( 5) = 11.989 BETA ( 2) = .180 MACH = .89910 Q = 599.28 P = 1059.0 RN/L = 3.5742

SECTION ( 1)BODY FLAP LOWER DEPENDENT VARIABLE CP

| X/LB | 1.0180 | 1.0460 |
|---|---|---|
| PHI | | |
| .000 | .4102 | .1317 |
| 40.000 | .2562 | .0024 |

AMES 11-073(OA148) -140A/B/C/R ORB BODY FLAP LWR (XE8G50)

ALPHA ( 5) = 11.979 BETA ( 3) = 4.2E0 MACH = .89910 Q = 599.28 P = 1059.0 RN/L = 3.5742

SECTION ( 1)BODY FLAP LOWER DEPENDENT VARIABLE CP

| X/LB | 1.0180 | 1.0460 |
|---|---|---|
| PHI | | |
| .000 | .4180 | .1321 |
| 40.000 | .2432 | -.0055 |

AMES 11-073(OA148) -140A/B/C/R ORB BODY FLAP LWR (XEBG51) ( 05 AUG 75 )

REFERENCE DATA

SREF = 2690.0000 SQ.FT. XMRP = 1076.6800 IN. XO
LREF = 474.8000 IN. YMRP = .0000 IN. YO
BREF = 935.0680 IN. ZMRP = 375.0000 IN. ZO
SCALE = .0300

PARAMETRIC DATA

RUDDER = -10.000 SPDBRK = 85.000
BDFLAP = 16.300 L-ELVN = 4.000
R-ELVN = 4.000 MACH = .600

ALPHA ( 1) = -3.976 BETA ( 1) = -7.854 MACH = .59542 Q = 592.57 P = 2387.9 RN/L = 4.8104

SECTION ( 1)BODY FLAP LOWER DEPENDENT VARIABLE CP

| X/LB | 1.0180 | 1.0460 |
|---|---|---|
| PHI | | |
| .000 | .2171 | -.0183 |
| 40.000 | .1312 | -.0418 |

ALPHA ( 1) = -3.959 BETA ( 2) = -3.844 MACH = .59542 Q = 592.57 P = 2387.9 RN/L = 4.8104

SECTION ( 1)BODY FLAP LOWER DEPENDENT VARIABLE CP

| X/LB | 1.0180 | 1.0460 |
|---|---|---|
| PHI | | |
| .000 | .2282 | -.0155 |
| 40.000 | .1375 | -.0489 |

ALPHA ( 1) = -3.955 BETA ( 3) = .188 MACH = .59542 Q = 592.57 P = 2387.9 RN/L = 4.8104

SECTION ( 1)BODY FLAP LOWER DEPENDENT VARIABLE CP

| X/LB | 1.0180 | 1.0460 |
|---|---|---|
| PHI | | |
| .000 | .2434 | -.0022 |
| 40.000 | .1095 | -.0780 |

ALPHA ( 1) = -3.963 BETA ( 4) = 4.269 MACH = .59542 Q = 592.57 P = 2387.9 RN/L = 4.8104

SECTION ( 1)BODY FLAP LOWER DEPENDENT VARIABLE CP

| X/LB | 1.0180 | 1.0460 |
|---|---|---|
| PHI | | |
| .000 | .2204 | -.0184 |
| 40.000 | .1177 | -.0934 |

AMES 11-073(OA148) -140A/B/C/R ORB BODY FLAP LWR (XE8G51)

ALPHA ( 1) = -3.980 BETA ( 5) = 8.339 MACH = .59542 Q = 592.57 P = 2387.9 RN/L = 4.8104

SECTION ( 1)BODY FLAP LOWER DEPENDENT VARIABLE CP

| X/LB | 1.0180 | 1.0460 |
|---|---|---|
| PHI | | |
| .000 | .2151 | -.0154 |
| 40.000 | .0950 | -.1066 |

ALPHA ( 2) = .060 BETA ( 1) = -7.891 MACH = .59620 Q = 593.99 P = 2387.5 RN/L = 4.8200

SECTION ( 1)BODY FLAP LOWER DEPENDENT VARIABLE CP

| X/LB | 1.0180 | 1.0460 |
|---|---|---|
| PHI | | |
| .000 | .2543 | -.0023 |
| 40.000 | .1666 | -.0306 |

ALPHA ( 2) = .070 BETA ( 2) = -3.863 MACH = .59620 Q = 593.99 P = 2387.5 RN/L = 4.8200

SECTION ( 1)BODY FLAP LOWER DEPENDENT VARIABLE CP

| X/LB | 1.0180 | 1.0460 |
|---|---|---|
| PHI | | |
| .000 | .2384 | -.0102 |
| 40.000 | .1600 | -.0400 |

ALPHA ( 2) = .075 BETA ( 3) = .185 MACH = .59620 Q = 593.99 P = 2387.5 RN/L = 4.8200

SECTION ( 1)BODY FLAP LOWER DEPENDENT VARIABLE CP

| X/LB | 1.0180 | 1.0460 |
|---|---|---|
| PHI | | |
| .000 | .2401 | -.0059 |
| 40.000 | .1299 | -.0700 |

ALPHA ( 2) = .070 BETA ( 4) = 4.248 MACH = .59620 Q = 593.99 P = 2387.5 RN/L = 4.8200

SECTION ( 1)BODY FLAP LOWER DEPENDENT VARIABLE CP

| X/LB | 1.0180 | 1.0460 |
|---|---|---|
| PHI | | |
| .000 | .2410 | -.0046 |
| 40.000 | .1137 | -.0974 |

ORIGINAL PAGE IS
OF POOR QUALITY

AMES 11-073(OA148) -140A/B/C/R ORB BODY FLAP LWR (XE8G51)

ALPHA ( 2) = .066 BETA ( 5) = 8.300 MACH = .59620 Q = 593.99 P = 2387.5 RN/L = 4.8200

SECTION ( 1)BODY FLAP LOWER DEPENDENT VARIABLE CP

| X/LB | 1.0180 | 1.0460 |
|---|---|---|
| PHI | | |
| .000 | .2506 | .0044 |
| 40.000 | .1054 | -.1044 |

ALPHA ( 3) = 4.023 BETA ( 1) = -7.901 MACH = .59564 Q = 593.05 P = 2388.1 RN/L = 4.8166

SECTION ( 1)BODY FLAP LOWER DEPENDENT VARIABLE CP

| X/LB | 1.0180 | 1.0460 |
|---|---|---|
| PHI | | |
| .000 | .2704 | .0088 |
| 40.000 | .1822 | -.0262 |

ALPHA ( 3) = 4.027 BETA ( 2) = -3.864 MACH = .59564 Q = 593.05 P = 2388.1 RN/L = 4.8166

SECTION ( 1)BODY FLAP LOWER DEPENDENT VARIABLE CP

| X/LB | 1.0180 | 1.0460 |
|---|---|---|
| PHI | | |
| .000 | .2605 | -.0007 |
| 40.000 | .1683 | -.0354 |

ALPHA ( 3) = 4.029 BETA ( 3) = .191 MACH = .59564 Q = 593.05 P = 2388.1 RN/L = 4.8166

SECTION ( 1)BODY FLAP LOWER DEPENDENT VARIABLE CP

| X/LB | 1.0180 | 1.0460 |
|---|---|---|
| PHI | | |
| .000 | .2659 | .0088 |
| 0.000 | .1462 | -.0671 |

ALPHA ( 3) = 4.031 BETA ( 4) = 4.239 MACH = .59564 Q = 593.05 P = 2388.1 RN/L = 4.8166

SECTION ( 1)BODY FLAP LOWER DEPENDENT VARIABLE CP

| X/LB | 1.0180 | 1.0460 |
|---|---|---|
| PHI | | |
| .000 | .2647 | .0079 |
| 40.000 | .1263 | -.0873 |

AMES 11-073(OA148) -140A/B/C/R ORB BODY FLAP LWR (XE8G51)

ALPHA ( 3) = 4.035 BETA ( 5) = 8.279 MACH = .59564 Q = 593.05 P = 2388.1 RN/L = 4.8166

SECTION ( 1)BODY FLAP LOWER DEPENDENT VARIABLE CP

| X/LB | 1.0180 | 1.0460 |
|---|---|---|
| PHI | | |
| .000 | .2727 | .0089 |
| 40.000 | .1177 | -.0948 |

ALPHA ( 4) = 8.061 BETA ( 1) = -7 986 MACH = .59572 Q = 593.16 P = 2387.8 RN/L = 4.8368

SECTION ( 1)BODY FLAP LOWER DEPENDENT VARIABLE CP

| X/LB | 1.0180 | 1.0460 |
|---|---|---|
| PHI | | |
| .000 | .2939 | .0187 |
| 40.000 | .1942 | -.0244 |

ALPHA ( 4) = 8.070 BETA ( 2) = -3.859 MACH = .59572 Q = 593.16 P = 2387.8 RN/L = 4.8368

SECTION ( 1)BODY FLAP LOWER DEPENDENT VARIABLE CP

| X/LB | 1.0180 | 1.0460 |
|---|---|---|
| PHI | | |
| .000 | .2892 | .0128 |
| 40.000 | .1850 | -.0322 |

ALPHA ( 4) = 8.069 BETA ( 3) = .180 MACH = .59572 Q = 593.16 P = 2387.8 RN/L = 4.8368

SECTION ( 1)BODY FLAP LOWER DEPENDENT VARIABLE CP

| X/LB | 1.0180 | 1.0460 |
|---|---|---|
| PHI | | |
| .000 | .2919 | .0240 |
| 40.000 | .1668 | -.0535 |

ALPHA ( 4) = 8.069 BETA ( 4) = 4.237 MACH = .59572 Q = 593.16 P = 2387.8 RN/L = 4.8368

SECTION ( 1)BODY FLAP LOWER DEPENDENT VARIABLE CP

| X/LB | 1.0180 | 1.0460 |
|---|---|---|
| PHI | | |
| .000 | .2972 | .0278 |
| 40.000 | .1476 | -.0656 |

AMES 11-073(OA148) -140A/B/C/R ORB BODY FLAP LWR (XE8G51)

ALPHA ( 4) = 8.053 BETA ( 5) = 8.284 MACH = .59572 Q = 593.16 P = 2387.8 RN/L = 4.8368

SECTION ( 1)BODY FLAP LOWER DEPENDENT VARIABLE CP

| X/LB | 1.0180 | 1.0460 |
|---|---|---|
| PHI | | |
| .000 | .2937 | .0148 |
| 40.000 | .1316 | -.0829 |

ALPHA ( 5) = 12.002 BETA ( 1) = -7.847 MACH = .59550 Q = 592.81 P = 2388.1 RN/L = 4.8267

SECTION ( 1)BODY FLAP LOWER DEPENDENT VARIABLE CP

| X/LB | 1.0180 | 1.0460 |
|---|---|---|
| PHI | | |
| .000 | .3172 | .0323 |
| 40.000 | .2098 | -.0046 |

ALPHA ( 5) = 12.023 BETA ( 2) = -3.840 MACH = .59550 Q = 592.81 P = 2388.1 RN/L = 4.8267

SECTION ( 1)BODY FLAP LOWER DEPENDENT VARIABLE CP

| X/LB | 1.0180 | 1.0460 |
|---|---|---|
| PHI | | |
| .000 | .3144 | .0323 |
| 40.000 | .2004 | -.0235 |

ALPHA ( 5) = 12.027 BETA ( 3) = .177 MACH = .59550 Q = 592.81 P = 2388.1 RN/L = 4.8267

SECTION ( 1)BODY FLAP LOWER DEPENDENT VARIABLE CP

| X/LB | 1.0180 | 1.0460 |
|---|---|---|
| PHI | | |
| .000 | .3189 | .0342 |
| 40.000 | .1838 | -.0424 |

ALPHA ( 5) = 12.024 BETA ( 4) = 4.250 MACH = .59550 Q = 592.81 P = 2388.1 RN/L = 4.8267

SECTION ( 1)BODY FLAP LOWER DEPENDENT VARIABLE CP

| X/LB | 1.0180 | 1.0460 |
|---|---|---|
| PHI | | |
| .000 | .3174 | .0354 |
| 40.000 | .1676 | -.0548 |

AMES 11-073(OA148) -140A/B/C/R ORB BODY FLAP LWR (XE8G51)

ALPHA ( 5) = 12.010 BETA ( 5) = 8.307 MACH = .59550 Q = 592.81 P = 2388.1 RN/L = 4.8267

SECTION ( 1)BODY FLAP LOWER DEPENDENT VARIABLE CP

| X/LB | 1.0180 | 1.0460 |
|---|---|---|
| PHI | | |
| .000 | .3179 | .0275 |
| 40.000 | .1581 | -.0642 |

ORIGINAL PAGE IS
OF POOR QUALITY

AMES 11-073(OA148) -140A/B/C/R ORB BODY FLAP LWR (XE8G52) ( 05 AUG 75 )

REFERENCE DATA

SREF = 2690.0000 SQ.FT. XMRP = 1076.6800 IN. XO
LREF = 474.8000 IN. YMRP = .0000 IN. YO
BREF = 936.0580 IN. ZMRP = 375.0000 IN. ZO
SCALE = .0300

PARAMETRIC DATA

RUDDER = -10.000 SPDBRK = 55.000
BDFLAP = 16.300 L-ELVN = -4.000
R-ELVN = 4.000 MACH = 1.400

ALPHA ( 1) = -4.050 BETA ( 1) = -3.860 MACH = 1.3963 Q = 600.46 P = 439.94 RN/L = 2.9139

SECTION ( 1)BODY FLAP LOWER DEPENDENT VARIABLE CP

| X/LB | 1.0180 | 1.0460 |
|---|---|---|
| PHI | | |
| .000 | .1905 | .1853 |
| 40.000 | .0396 | -.0105 |

ALPHA ( 1) = -4.043 BETA ( 2) = .186 MACH = 1.3963 Q = 600.46 P = 439.94 RN/L = 2.9139

SECTION ( 1)BODY FLAP LOWER DEPENDENT VARIABLE CP

| X/LB | 1.0180 | 1.0460 |
|---|---|---|
| PHI | | |
| .000 | .1826 | .1764 |
| 40.000 | .0853 | .0508 |

ALPHA ( 1) = -4.048 BETA ( 3) = 4.268 MACH = 1.3963 Q = 600.46 P = 439.94 RN/L = 2.9139

SECTION ( 1)BODY FLAP LOWER DEPENDENT VARIABLE CP

| X/LB | 1.0180 | 1.0460 |
|---|---|---|
| PHI | | |
| .000 | .1956 | .1749 |
| 40.000 | .0764 | .0580 |

ALPHA ( 2) = -.027 BETA ( 1) = -3.878 MACH = 1.3971 Q = 600.78 P = 439.70 RN/L = 2.9154

SECTION ( 1)BODY FLAP LOWER DEPENDENT VARIABLE CP

| X/LB | 1.0180 | 1.0460 |
|---|---|---|
| PHI | | |
| .000 | .2380 | .2252 |
| 40.000 | .1430 | .0755 |

AMES 11-073(OA148) -140A/B/C/R ORB BODY FLAP LWR (XE8G52)

ALPHA ( 2) = -.013 BETA ( 2) = .172 MACH = 1.3971 Q = 600.78 P = 439.70 RN/L = 2.9154

SECTION ( 1)BODY FLAP LOWER DEPENDENT VARIABLE CP

| X/LB | 1.0180 | 1.0460 |
|---|---|---|
| PHI | | |
| .000 | .2495 | .2275 |
| 40.000 | .1269 | .0892 |

ALPHA ( 2) = -.015 BETA ( 3) = 4.247 MACH = 1.3971 Q = 600.78 P = 439.70 RN/L = 2.9154

SECTION ( 1)BODY FLAP LOWER DEPENDENT VARIABLE CP

| X/LB | 1.0180 | 1.0460 |
|---|---|---|
| PHI | | |
| .000 | .2438 | .2167 |
| 40.000 | .1299 | .0907 |

ALPHA ( 3) = 3.910 BETA ( 1) = -3.886 MACH = 1.3964 Q = 600.16 P = 439.71 RN/L = 2.9092

SECTION ( 1)BODY FLAP LOWER DEPENDENT VARIABLE CP

| X/LB | 1.0180 | 1.0460 |
|---|---|---|
| PHI | | |
| .000 | .3317 | .3014 |
| 40.000 | .2271 | .1549 |

ALPHA ( 3) = 3.912 BETA ( 2) = .174 MACH = 1.3964 Q = 600.16 P = 439.71 RN/L = 2.9092

SECTION ( 1)BODY FLAP LOWER DEPENDENT VARIABLE CP

| X/LB | 1.0180 | 1.0460 |
|---|---|---|
| PHI | | |
| .000 | .3312 | .2978 |
| 40.000 | .2076 | .1461 |

ALPHA ( 3) = 3.916 BETA ( 3) = 4.236 MACH = 1.3964 Q = 600.16 P = 439.71 RN/L = 2.9092

SECTION ( 1)BODY FLAP LOWER DEPENDENT VARIABLE CP

| X/LB | 1.0180 | 1.0460 |
|---|---|---|
| PHI | | |
| .000 | .3407 | .3082 |
| 40.000 | .2056 | .1594 |

AMES 11-073(OA148) -140A/B/C/R ORB BODY FLAP LWR (XE8052)

ALPHA ( 4) = 7.922 BETA ( 1) = -3.876 MACH = 1.3965 Q = 599.65 P = 439.24 RN/L = 2.9107

SECTION ( 1)BODY FLAP LOWER DEPENDENT VARIABLE CP

| X/LB | 1.0180 | 1.0460 |
|---|---|---|
| PHI | | |
| .000 | .4339 | .3835 |
| 40.000 | .3056 | .2071 |

ALPHA ( 4) = 7.930 BETA ( 2) = .169 MACH = 1.3965 Q = 599.65 P = 439.24 RN/L = 2.9107

SECTION ( 1)BODY FLAP LOWER DEPENDENT VARIABLE CP

| X/LB | 1.0180 | 1.0460 |
|---|---|---|
| PHI | | |
| .000 | .4392 | .3774 |
| 40.000 | .2979 | .2161 |

ALPHA ( 4) = 7.931 BETA ( 3) = 4.235 MACH = 1.3965 Q = 599.65 P = 439.24 RN/L = 2.9107

SECTION ( 1)BODY FLAP LOWER DEPENDENT VARIABLE CP

| X/LB | 1.0180 | 1.0460 |
|---|---|---|
| PHI | | |
| .000 | .4456 | .3859 |
| 40.000 | .2921 | .2281 |

ALPHA ( 5) = 11.858 BETA ( 1) = -3.866 MACH = 1.3951 Q = 600.34 P = 440.65 RN/L = 2.9166

SECTION ( 1)BODY FLAP LOWER DEPENDENT VARIABLE CP

| X/LB | 1.0180 | 1.0460 |
|---|---|---|
| PHI | | |
| .000 | .5441 | .4502 |
| 40.000 | .3799 | .2655 |

ALPHA ( 5) = 11.867 BETA ( 2) = .167 MACH = 1.3951 Q = 600.34 P = 440.65 RN/L = 2.9166

SECTION ( 1)BODY FLAP LOWER DEPENDENT VARIABLE CP

| X/LB | 1.0180 | 1.0460 |
|---|---|---|
| PHI | | |
| .000 | .5376 | .4482 |
| 40.000 | .3841 | .2860 |

AMES 11-073(OA148) -140A/B/C/R ORB BODY FLAP LWR (XE8G52)

ALPHA ( 5) = 11.865 BETA ( 3) = 4.248 MACH = 1.3951 Q = 600.34 P = 440.65 RN/L = 2.9166

SECTION ( 1)BODY FLAP LOWER DEPENDENT VARIABLE CP

| X/LB | 1.0180 | 1.0460 |
|---|---|---|
| PHI | | |
| .000 | .5435 | .4423 |
| 40.000 | .3757 | .2948 |

ALPHA ( 6) = 15.826 BETA ( 1) = -3.845 MACH = 1.3947 Q = 600.64 P = 441.12 RN/L = 2.91D2

SECTION ( 1)BODY FLAP LOWER DEPENDENT VARIABLE CP

| X/LB | 1.0180 | 1.0460 |
|---|---|---|
| PHI | | |
| .000 | .6350 | .5101 |
| 40.000 | .4681 | .3402 |

ALPHA ( 6) = 15.841 BETA ( 2) = .165 MACH = 1.3947 Q = 600.64 P = 441.12 RN/L = 2.91D2

SECTION ( 1)BODY FLAP LOWER DEPENDENT VARIABLE CP

| X/LB | 1.0180 | 1.0460 |
|---|---|---|
| PHI | | |
| .000 | .6346 | .5077 |
| 40.000 | .4648 | .3525 |

ALPHA ( 6) = 15.833 BETA ( 3) = 4.274 MACH = 1.3947 Q = 600.64 P = 441.12 RN/L = 2.91D2

SECTION ( 1)BODY FLAP LOWER DEPENDENT VARIABLE CP

| X/LB | 1.0180 | 1.0460 |
|---|---|---|
| PHI | | |
| .000 | .6352 | .5046 |
| 40.000 | .4559 | .3597 |

AMES 11-073(OA148) -140A/B/C/R ORB BODY FLAP LWR (XEBG53) ( 05 AUG 75 )

REFERENCE DATA

SREF = 2690.0000 SQ.FT. XMRP = 1076.6800 IN. XO
LREF = 474.8000 IN. YMRP = .0000 IN. YO
BREF = 930.0690 IN. ZMRP = 375.0000 IN. ZO
SCALE = .0300

PARAMETRIC DATA

RUDDER = -10.000 SPDBRK = 55.000
BDFLAP = 16.300 L-ELVN = -4.000
R-ELVN = 4.000 MACH = 1.250

ALPHA ( 1) = -4.036 BETA ( 1) = -3.860 MACH = 1.2435 Q = 597.22 P = 551.79 RN/L = 3.0068

SECTION ( 1)BODY FLAP LOWER DEPENDENT VARIABLE CP

| X/LB | 1.0180 | 1.0460 |
|---|---|---|
| PHI | | |
| .000 | .1615 | .1245 |
| 40.000 | -.0155 | -.0592 |

ALPHA ( 1) = -4.029 BETA ( 2) = .182 MACH = 1.2435 Q = 597.22 P = 551.79 RN/L = 3.0068

SECTION ( 1)BODY FLAP LOWER DEPENDENT VARIABLE CP

| X/LB | 1.0180 | 1.0460 |
|---|---|---|
| PHI | | |
| .000 | .1583 | .1317 |
| 40.000 | .0352 | -.0109 |

ALPHA ( 1) = -4.033 BETA ( 3) = 4.271 MACH = 1.2435 Q = 597.22 P = 551.79 RN/L = 3.0068

SECTION ( 1)BODY FLAP LOWER DEPENDENT VARIABLE CP

| X/LB | 1.0180 | 1.0460 |
|---|---|---|
| PHI | | |
| .000 | .1561 | .1284 |
| 40.000 | .0237 | -.0050 |

ALPHA ( 2) = -.011 BETA ( 1) = -3.881 MACH = 1.2454 Q = 599.32 P = 552.04 RN/L = 3.0119

SECTION ( 1)BODY FLAP LOWER DEPENDENT VARIABLE CP

| X/LB | 1.0180 | 1.0460 |
|---|---|---|
| PHI | | |
| .000 | .2072 | .1690 |
| 40.000 | .1002 | .0215 |

AMES 11-073(OA148) -140A/B/C/R ORB BODY FLAP LWR (XEBG53)

ALPHA ( 2) = .001 BETA ( 2) = .178 MACH = 1.2454 Q = 599.32 P = 552.04 RN/L = 3.0119

SECTION ( 1)BODY FLAP LOWER DEPENDENT VARIABLE CP

| X/LB | 1.0180 | 1.0460 |
|---|---|---|
| PHI | | |
| .000 | .2341 | .1880 |
| 40.000 | .0854 | .0355 |

ALPHA ( 2) = .000 BETA ( 3) = 4.247 MACH = 1.2454 Q = 599.32 P = 552.04 RN/L = 3.0119

SECTION ( 1)BODY FLAP LOWER DEPENDENT VARIABLE CP

| X/LB | 1.0180 | 1.0460 |
|---|---|---|
| PHI | | |
| .000 | .2099 | .1765 |
| 40.000 | .0974 | .0390 |

ALPHA ( 3) = 3.945 BETA ( 1) = -3.877 MACH = 1.2467 Q = 599.84 P = 551.34 RN/L = 3.0121

SECTION ( 1)BODY FLAP LOWER DEPENDENT VARIABLE CP

| X/LB | 1.0180 | 1.0460 |
|---|---|---|
| PHI | | |
| .000 | .3553 | .2837 |
| 40.000 | .2312 | .1482 |

ALPHA ( 3) = 3.945 BETA ( 2) = .180 MACH = 1.2467 Q = 599.84 P = 551.34 RN/L = 3.0121

SECTION ( 1)BODY FLAP LOWER DEPENDENT VARIABLE CP

| X/LB | 1.0180 | 1.0460 |
|---|---|---|
| PHI | | |
| .000 | .3546 | .2821 |
| 40.000 | .2069 | .1244 |

ALPHA ( 3) = 3.949 BETA ( 3) = 4.232 MACH = 1.2467 Q = 599.84 P = 551.34 RN/L = 3.0121

SECTION ( 1)BODY FLAP LOWER DEPENDENT VARIABLE CP

| X/LB | 1.0180 | 1.0460 |
|---|---|---|
| PHI | | |
| .000 | .3540 | .2861 |
| 40.000 | .2045 | .1225 |

AMES 11-073(OA148) -140A/B/C/R ORB BODY FLAP LWR (XE8G53)

ALPHA ( 4) = 7.975 BETA ( 1) = -3.876 MACH = 1.2465 Q = 599.91 P = 551.57 RN/L = 3.0143

SECTION ( 1)BODY FLAP LOWER DEPENDENT VARIABLE CP

| X/LB | 1.0180 | 1.0460 |
|---|---|---|
| PHI | | |
| .000 | .4593 | .3472 |
| 40.000 | .2971 | .1886 |

ALPHA ( 4) = 7.918 BETA ( 2) = .169 MACH = 1.2465 Q = 599.91 P = 551.57 RN/L = 3.0143

SECTION ( 1)BODY FLAP LOWER DEPENDENT VARIABLE CP

| X/LB | 1.0180 | 1.0460 |
|---|---|---|
| PHI | | |
| .000 | .4579 | .3469 |
| 40.000 | .2871 | .1797 |

ALPHA ( 4) = 7.882 BETA ( 3) = 4.233 MACH = 1.2465 Q = 599.91 P = 551.57 RN/L = 3.0143

SECTION ( 1)BODY FLAP LOWER DEPENDENT VARIABLE CP

| X/LB | 1.0180 | 1.0460 |
|---|---|---|
| PHI | | |
| .000 | .4634 | .3531 |
| 40.000 | .2860 | .1816 |

ALPHA ( 5) = 11.916 BETA ( 1) = -3.857 MACH = 1.2482 Q = 600.48 P = 550.64 RN/L = 3.0151

SECTION ( 1)BODY FLAP LOWER DEPENDENT VARIABLE CP

| X/LB | 1.0180 | 1.0460 |
|---|---|---|
| PHI | | |
| .000 | .5413 | .3994 |
| 40.000 | .3564 | .2287 |

ALPHA ( 5) = 11.930 BETA ( 2) = .181 MACH = 1.2482 Q = 600.48 P = 550.64 RN/L = 3.0151

SECTION ( 1)BODY FLAP LOWER DEPENDENT VARIABLE CP

| X/LB | 1.0180 | 1.0460 |
|---|---|---|
| PHI | | |
| .000 | .5419 | .3938 |
| 40.000 | .3575 | .2252 |

AMES 11-073(OA148) -140A/B/C/R ORB BODY FLAP LWR (XE8G53)

ALPHA ( 5) = 11 .5 BETA ( 3) = 4.245 MACH = 1.2482 Q = 600.48 P = 550.64 RN/L = 3.0151

SECTION ( 1)BODY FLAP LOWER DEPENDENT VARIABLE CP

| X/LB | 1.0180 | 1.0460 |
|---|---|---|
| PHI | | |
| .000 | .5445 | .3976 |
| 40.000 | .3579 | .2350 |

ORIGINAL PAGE IS
OF POOR QUALITY

AMES 11-073(OA148) -140A/B/C/R ORB BODY FLAP LWR (XE8G54) ( 05 AUG 75 )

REFERENCE DATA

SREF = 2690.0000 SQ.FT. XMRP = 1076.6800 IN. XO
LREF = 474.8000 IN. YMRP = .0000 IN. YO
BREF = 936.0680 IN. ZMRP = 375.0000 IN. ZO
SCALE = .0300

PARAMETRIC DATA

RUDDER = -10.000 SPDBRK = 55.000
BDFLAP = 16.300 L-ELVN = -4.000
R-ELVN = 4.000 MACH = 1.100

ALPHA ( 1) = -3.970 BETA ( 1) = -3.853 MACH = 1.1014 Q = 600.89 P = 707.69 RN/L = 3.1837

SECTION ( 1)BODY FLAP LOWER DEPENDENT VARIABLE CP

| X/LB | 1.0180 | 1.0460 |
|---|---|---|
| PHI | | |
| .000 | .2468 | .1713 |
| 40.000 | .0383 | .0185 |

ALPHA ( 1) = -3.931 BETA ( 2) = .182 MACH = 1.1014 Q = 600.89 P = 707.69 RN/L = 3.1837

SECTION ( 1)BODY FLAP LOWER DEPENDENT VARIABLE CP

| X/LB | 1.0180 | 1.0460 |
|---|---|---|
| PHI | | |
| .000 | .2654 | .1882 |
| 40.000 | .0829 | .0565 |

ALPHA ( 1) = -3.991 BETA ( 3) = 4.263 MACH = 1.1014 Q = 600.89 P = 707.69 RN/L = 3.1837

SECTION ( 1)BODY FLAP LOWER DEPENDENT VARIABLE CP

| X/LB | 1.0180 | 1.0460 |
|---|---|---|
| PHI | | |
| .000 | .2192 | .1569 |
| 40.000 | .0694 | .0210 |

ALPHA ( 2) = .009 BETA ( 1) = -3.870 MACH = 1.1014 Q = 600.89 P = 707.69 RN/L = 3.1864

SECTION ( 1)BODY FLAP LOWER DEPENDENT VARIABLE CP

| X/LB | 1.0180 | 1.0460 |
|---|---|---|
| PHI | | |
| .000 | .2905 | .1933 |
| 40.000 | .1609 | .0854 |

AMES 11-073(OA148) -140A/B/C/R ORB BODY FLAP LWR (XE8G54)

ALPHA ( 2) = .092 BETA ( 2) = .176 MACH = 1.1014 Q = 600.89 P = 707.69 RN/L = 3.1864

SECTION ( 1)BODY FLAP LOWER DEPENDENT VARIABLE CP

| X/LB | 1.0180 | 1.0460 |
|---|---|---|
| PHI | | |
| .000 | .3228 | .2136 |
| 40.000 | .1442 | .0876 |

ALPHA ( 2) = .026 BETA ( 3) = 4.243 MACH = 1.1014 Q = 600.89 P = 707.69 RN/L = 3.1864

SECTION ( 1)BODY FLAP LOWER DEPENDENT VARIABLE CP

| X/LB | 1.0180 | 1.0460 |
|---|---|---|
| PHI | | |
| .000 | .2665 | .1924 |
| 40.000 | .1355 | .0479 |

ALPHA ( 3) = 3.932 BETA ( 1) = -3.873 MACH = 1.1009 Q = 600.53 P = 707.91 RN/L = 3.1859

SECTION ( 1)BODY FLAP LOWER DEPENDENT VARIABLE CP

| X/LB | 1.0180 | 1.0460 |
|---|---|---|
| PHI | | |
| .000 | .3681 | .2373 |
| 40.000 | .2262 | .1269 |

ALPHA ( 3) = 3.933 BETA ( 2) = .171 MACH = 1.1009 Q = 600.53 P = 707.91 RN/L = 3.1859

SECTION ( 1)BODY FLAP LOWER DEPENDENT VARIABLE CP

| X/LB | 1.0180 | 1.0460 |
|---|---|---|
| PHI | | |
| .000 | .3822 | .2436 |
| 40.000 | .2139 | .1114 |

ALPHA ( 3) = 3.943 BETA ( 3) = 4.232 MACH = 1.1009 Q = 600.53 P = 707.91 RN/L = 3.1859

SECTION ( 1)BODY FLAP LOWER DEPENDENT VARIABLE CP

| X/LB | 1.0180 | 1.0460 |
|---|---|---|
| PHI | | |
| .000 | .3730 | .2424 |
| 40.000 | .1963 | .0801 |

AMES 11-073(OA148) -140A/B/C/R ORB BODY FLAP LWR (XE8G54)

ALPHA ( 4) = 7.906 BETA ( 1) = -3.871 MACH = 1.1009 Q = 600.53 P = 707.91 RN/L = 3.1862

SECTION ( 1)BODY FLAP LOWER DEPENDENT VARIABLE CP

| X/LB | 1.0180 | 1.0460 |
|---|---|---|
| PHI | | |
| .000 | .4540 | .2799 |
| 40.000 | .2787 | .1515 |

ALPHA ( 4) = 8.006 BETA ( 2) = .170 MACH = 1.1009 Q = 600.53 P = 707.91 RN/L = 3.1862

SECTION ( 1)BODY FLAP LOWER DEPENDENT VARIABLE CP

| X/LB | 1.0180 | 1.0460 |
|---|---|---|
| PHI | | |
| .000 | .4614 | .2954 |
| 40.000 | .2868 | .1378 |

ALPHA ( 4) = 8.008 BETA ( 3) = 4.224 MACH = 1.1009 Q = 600.53 P = 707.91 RN/L = 3.1862

SECTION ( 1)BODY FLAP LOWER DEPENDENT VARIABLE CP

| X/LB | 1.0180 | 1.0460 |
|---|---|---|
| PHI | | |
| .000 | .4562 | .2820 |
| 40.000 | .2624 | .1152 |

ALPHA ( 5) = 11.922 BETA ( 1) = -3.854 MACH = 1.1005 Q = 600.31 P = 708.13 RN/L = 3.1832

SECTION ( 1)BODY FLAP LOWER DEPENDENT VARIABLE CP

| X/LB | 1.0180 | 1.0460 |
|---|---|---|
| PHI | | |
| .000 | .5247 | .3128 |
| 40.000 | .3419 | .1651 |

ALPHA ( 5) = 11.941 BETA ( 2) = .179 MACH = 1.1005 Q = 600.31 P = 708.13 RN/L = 3.1832

SECTION ( 1)BODY FLAP LOWER DEPENDENT VARIABLE CP

| X/LB | 1.0180 | 1.0460 |
|---|---|---|
| PHI | | |
| .000 | .5290 | .3156 |
| 40.000 | .3411 | .1523 |

AMES 11-073(OA148) -140A/B/C/R ORB BODY FLAP LWR (XE8G54)

ALPHA ( 5) = 12.006 BETA ( 3) = 4.239 MACH = 1.1005 Q = 600.31 P = 708.13 RN/L = 3.1832

SECTION ( 1)BODY FLAP LOWER DEPENDENT VARIABLE CP

| X/LB | 1.0180 | 1.0460 |
|---|---|---|
| PHI | | |
| .000 | .5272 | .3160 |
| 40.000 | .3293 | .1377 |

ORIGINAL PAGE IS
OF POOR QUALITY

AMES 11-073(OA148) -140A/B/C/R ORB BODY FLAP LWR (XE8655) ( 05 AUG 75 )

REFERENCE DATA

SREF = 2690.0000 SQ.FT. XMRP = 1076.6800 IN. XO
LREF = 474.8000 IN. YMRP = .0000 IN. YO
BREF = 936.0000 IN. ZMRP = 375.0000 IN. ZO
SCALE = .0300

PARAMETRIC DATA

RUDDER = -10.000 SPDBRK = 55.000
BDFLAP = 16.300 L-ELVN = -4.000
R-ELVN = 4.000 MACH = .900

ALPHA ( 1) = -3.996 BETA ( 1) = -3.861 MACH = .90063 Q = 600.64 P = 1057.8 RN/L = 3.5876

SECTION ( 1)BODY FLAP LOWER DEPENDENT VARIABLE CP

| X/LB | 1.0180 | 1.0460 |
|---|---|---|
| PHI | | |
| .000 | .3057 | .1100 |
| 40.000 | .1232 | .0214 |

ALPHA ( 1) = -3.902 BETA ( 2) = .179 MACH = .90063 Q = 600.64 P = 1057.8 RN/L = 3.5876

SECTION ( 1)BODY FLAP LOWER DEPENDENT VARIABLE CP

| X/LB | 1.0180 | 1.0460 |
|---|---|---|
| PHI | | |
| .000 | .3144 | .1099 |
| 40.000 | .1549 | .0172 |

ALPHA ( 1) = -3.952 BETA ( 3) = 4.262 MACH = .90063 Q = 600.64 P = 1057.8 RN/L = 3.5876

SECTION ( 1)BODY FLAP LOWER DEPENDENT VARIABLE CP

| X/LB | 1.0180 | 1.0460 |
|---|---|---|
| PHI | | |
| .000 | .2720 | .0937 |
| 40.000 | .1729 | -.0074 |

ALPHA ( 2) = .074 BETA ( 1) = -3.874 MACH = .89883 Q = 599.16 P = 1059.5 RN/L = 3.5834

SECTION ( 1)BODY FLAP LOWER DEPENDENT VARIABLE CP

| X/LB | 1.0180 | 1.0460 |
|---|---|---|
| PHI | | |
| .000 | .3009 | .1019 |
| 40.000 | .1841 | .0425 |

AMES 11-073(OA148) -140A/B/C/R ORB BODY FLAP LWR (XE8055)

ALPHA ( 2) = .080 BETA ( 2) = .167 MACH = .89883 Q = 599.16 P = 1059.5 RN/L = 3.5834

SECTION ( 1)BODY FLAP LOWER DEPENDENT VARIABLE CP

| X/LB | 1.0180 | 1.0460 |
|---|---|---|
| PHI | | |
| .000 | .3134 | .0995 |
| 40.000 | .1826 | .0137 |

ALPHA ( 2) = .057 BETA ( 3) = 4.244 MACH = .89883 Q = 599.16 P = 1059.5 RN/L = 3.5834

SECTION ( 1)BODY FLAP LOWER DEPENDENT VARIABLE CP

| X/LB | 1.0180 | 1.0460 |
|---|---|---|
| PHI | | |
| .000 | .2899 | .0915 |
| 40.000 | .1653 | -.0160 |

ALPHA ( 3) = 3.946 BETA ( 1) = -3.879 MACH = .89970 Q = 599.92 P = 1059.7 RN/L = 3.5860

SECTION ( 1)BODY FLAP LOWER DEPENDENT VARIABLE CP

| X/LB | 1.0180 | 1.0460 |
|---|---|---|
| PHI | | |
| .000 | .3522 | .1185 |
| 40.000 | .2379 | .0551 |

ALPHA ( 3) = 3.951 BETA ( 2) = .176 MACH = .89970 Q = 599.92 P = 1058.7 RN/L = 3.5860

SECTION ( 1)BODY FLAP LOWER DEPENDENT VARIABLE CP

| X/LB | 1.0180 | 1.0460 |
|---|---|---|
| PHI | | |
| .000 | .3451 | .1116 |
| 40.000 | .2177 | .0232 |

ALPHA ( 3) = 3.956 BETA ( 3) = 4.235 MACH = .89970 Q = 599.92 P = 1058.7 RN/L = 3.5860

SECTION ( 1)BODY FLAP LOWER DEPENDENT VARIABLE CP

| X/LB | 1.0180 | 1.0460 |
|---|---|---|
| PHI | | |
| .000 | .3434 | .1072 |
| 40.000 | .1921 | -.0041 |

AMES 11-073(OA148) -140A/B/C/R ORB BODY FLAP LWR (XE8055)

ALPHA ( 4) = 7.893 BETA ( 1) = -3.876 MACH = .89863 Q = 599.02 P = 1059.8 RN/L = 3.5893

SECTION ( 1)BODY FLAP LOWER DEPENDENT VARIABLE CP

| X/LB | 1.0180 | 1.0460 |
|---|---|---|
| PHI | | |
| .000 | .3999 | .1295 |
| 40.000 | .2694 | .0611 |

ALPHA ( 4) = 8.030 BETA ( 2) = .173 MACH = .89863 Q = 599.02 P = 1059.8 RN/L = 3.5893

SECTION ( 1)BODY FLAP LOWER DEPENDENT VARIABLE CP

| X/LB | 1.0180 | 1.0460 |
|---|---|---|
| PHI | | |
| .000 | .3821 | .1223 |
| 40.000 | .2434 | .0315 |

ALPHA ( 4) = 8.015 BETA ( 3) = 4.230 MACH = .89863 Q = 599.02 P = 1059.8 RN/L = 3.5893

SECTION ( 1)BODY FLAP LOWER DEPENDENT VARIABLE CP

| X/LB | 1.0180 | 1.0460 |
|---|---|---|
| PHI | | |
| .000 | .3820 | .1183 |
| 40.000 | .2170 | .0054 |

ALPHA ( 5) = 11.973 BETA ( 1) = -3.861 MACH = .89910 Q = 599.49 P = 1059.5 RN/L = 3.5890

SECTION ( 1)BODY FLAP LOWER DEPENDENT VARIABLE CP

| X/LB | 1.0180 | 1.0460 |
|---|---|---|
| PHI | | |
| .000 | .4153 | .1374 |
| 40.000 | .2828 | .0566 |

ALPHA ( 5) = 11.987 BETA ( 2) = .182 MACH = .89910 Q = 599.49 P = 1059.5 RN/L = 3.5890

SECTION ( 1)BODY FLAP LOWER DEPENDENT VARIABLE CP

| X/LB | 1.0180 | 1.0460 |
|---|---|---|
| PHI | | |
| .000 | .4133 | .1332 |
| 40.000 | .2580 | .0272 |

AMES 11-073(OA148) -140A/B/C/R ORB BODY FLAP LWR (XEBG55)

ALPHA ( 5) = 12.005 BETA ( 3) = 4.250 MACH = .89910 Q = 599.49 P = 1059.5 RN/L = 3.5890

SECTION ( 1)BODY FLAP LOWER DEPENDENT VARIABLE CP

| X/LB | 1.0180 | 1.0460 |
|---|---|---|
| PHI | | |
| .000 | .4106 | .1307 |
| 40.000 | .2340 | .0028 |

AMES 11-073(OA148) -140A/B/C/R ORB BODY FLAP LWR (XEBG56) ( 05 AUG 75 )

REFERENCE DATA

SREF = 2690.0000 SQ.FT. XMRP = 1076.6800 IN. XO
LREF = 474.6000 IN. YMRP = .0000 IN. YO
BREF = 936.0580 IN. ZMRP = 375.0000 IN. ZO
SCALE = .0300

PARAMETRIC DATA

RUDDER = -10.000 SPDBRK = 55.000
BDFLAP = 15.300 L-ELVN = -4.000
R-ELVN = 4.000 MACH = .600

ALPHA ( 1) = -4.044 BETA ( 1) = -7.862 MACH = .59674 Q = 594.66 P = 2385.6 RN/L = 4.8797

SECTION ( 1)BODY FLAP LOWER DEPENDENT VARIABLE CP

X/LB 1.0180 1.0460

PHI
.000 .2265 .0070
-0.000 .1235 -.0301

ALPHA ( 1) = -3.971 BETA ( 2) = -3.856 MACH = .59674 Q = 594.66 P = 2385.6 RN/L = 4.8797

SECTION ( 1)BODY FLAP LOWER DEPENDENT VARIABLE CP

X/LB 1.0180 1.0460

PHI
.000 .2455 .0089
40.000 .1338 -.0416

ALPHA ( 1) = -3.944 BETA ( 3) = .179 MACH = .59674 Q = 594.66 P = 2385.6 RN/L = 4.8797

SECTION ( 1)BODY FLAP LOWER DEPENDENT VARIABLE CP

X/LB 1.0180 1.0460

PHI
.000 .2465 .0120
40.000 .1211 -.0477

ALPHA ( 1) = -3.952 BETA ( 4) = 4.259 MACH = .59674 Q = 594.66 P = 2385.6 RN/L = 4.8797

SECTION ( 1)BODY FLAP LOWER DEPENDENT VARIABLE CP

X/LB 1.0180 1.0460

PHI
.000 .2185 -.0016
40.000 .1248 -.0516

AMES 11-073(OA148) -140A/B/C/R ORB BODY FLAP LWR (KE9055)

ALPHA ( 1) = -3.957 BETA ( 5) = 8.330 MACH = .59674 Q = 594.66 P = 2385.5 RN/L = 4.8797

SECTION ( 1)BODY FLAP LOWER DEPENDENT VARIABLE CP

| X/LB | 1.0180 | 1.0460 |
|---|---|---|
| PHI | | |
| .000 | .2148 | -.0142 |
| 40.000 | .0991 | -.0815 |

ALPHA ( 2) = .082 BETA ( 1) = -7.901 MACH = .59728 Q = 595.74 P = 2385.5 RN/L = 4.8905

SECTION ( 1)BODY FLAP LOWER DEPENDENT VARIABLE CP

| X/LB | 1.0180 | 1.0460 |
|---|---|---|
| PHI | | |
| .000 | .2625 | .0204 |
| 40.000 | .1467 | -.0179 |

ALPHA ( 2) = .093 BETA ( 2) = -3.873 MACH = .59728 Q = 595.74 P = 2385.5 RN/L = 4.8905

SECTION ( 1)BODY FLAP LOWER DEPENDENT VARIABLE CP

| X/LB | 1.0180 | 1.0460 |
|---|---|---|
| PHI | | |
| .000 | .2407 | .0160 |
| 40.000 | .1560 | -.0247 |

ALPHA ( 2) = .095 BETA ( 3) = .179 MACH = .59728 Q = 595.74 P = 2385.5 RN/L = 4.8905

SECTION ( 1)BODY FLAP LOWER DEPENDENT VARIABLE CP

| X/LB | 1.0180 | 1.0460 |
|---|---|---|
| PHI | | |
| .000 | .2447 | .0111 |
| 40.000 | .1393 | -.0449 |

ALPHA ( 2) = .092 BETA ( 4) = 4.242 MACH = .59728 Q = 595.74 P = 2385.5 RN/L = 4.8905

SECTION ( 1)BODY FLAP LOWER DEPENDENT VARIABLE CP

| X/LB | 1.0180 | 1.0460 |
|---|---|---|
| PHI | | |
| .000 | .2404 | .0091 |
| 40.000 | .1191 | -.0878 |

ORIGINAL PAGE IS
OF POOR QUALITY

AMES 11-073(OA148) -140A/B/C/R ORB BODY FLAP LWR (NE8055)

ALPHA ( 2) = .039 BETA ( 5) = 8.298 MACH = .59728 Q = 595.74 P = 2385.6 RN/L = 4.8805

SECTION ( 1)BODY FLAP LOWER DEPENDENT VARIABLE CP

| X/LB | 1.0180 | 1.0460 |
|---|---|---|
| PHI | | |
| .000 | .2520 | -.0037 |
| 40.000 | .1119 | -.0652 |

ALPHA ( 3) = 4.036 BETA ( 1) = -7.914 MACH = .59696 Q = 595.02 P = 2385.3 RN/L = 4.8897

SECTION ( 1)BODY FLAP LOWER DEPENDENT VARIABLE CP

| X/LB | 1.0180 | 1.0460 |
|---|---|---|
| PHI | | |
| .000 | .2502 | .0204 |
| 40.000 | .1732 | -.0053 |

ALPHA ( 3) = 4.041 BETA ( 2) = -3.873 MACH = .59696 Q = 595.02 P = 2385.3 RN/L = 4.8897

SECTION ( 1)BODY FLAP LOWER DEPENDENT VARIABLE CP

| X/LB | 1.0180 | 1.0460 |
|---|---|---|
| PHI | | |
| .000 | .2716 | .0218 |
| 40.000 | .1794 | -.0207 |

ALPHA ( 3) = 4.096 BETA ( 3) = .178 MACH = .59696 Q = 595.02 P = 2385.3 RN/L = 4.8897

SECTION ( 1)BODY FLAP LOWER DEPENDENT VARIABLE CP

| X/LB | 1.0180 | 1.0460 |
|---|---|---|
| PHI | | |
| .000 | .2672 | .0202 |
| 40.000 | .1585 | -.0377 |

ALPHA ( 3) = 3.977 BETA ( 4) = 4.232 MACH = .59696 Q = 595.02 P = 2385.3 RN/L = 4.8897

SECTION ( 1)BODY FLAP LOWER DEPENDENT VARIABLE CP

| X/LB | 1.0180 | 1.0460 |
|---|---|---|
| PHI | | |
| .000 | .2650 | .0137 |
| 40.000 | .1392 | -.0481 |

AMES 11-073(OA148) -140A/B/C/R CPB BODY FLAP LWR (XE3355)

ALPHA ( 3) = 4.011 BETA ( 5) = 8.279 MACH = .59596 Q = 595.02 P = 2385.3 PN/L = -.8897

SECTION ( 1)BODY FLAP LOWER DEPENDENT VARIABLE CP

| X/LB | 1.0180 | 1.0460 |
|---|---|---|
| PHI | | |
| .000 | .2705 | .0012 |
| 40.000 | .1319 | -.0524 |

ALPHA ( 4) = 8.004 BETA ( 1) = -7.903 MACH = .59578 Q = 594.78 P = 2385.7 PN/L = -.8929

SECTION ( 1)BODY FLAP LOWER DEPENDENT VARIABLE CP

| X/LB | 1.0180 | 1.0460 |
|---|---|---|
| PHI | | |
| .000 | .2997 | .0292 |
| 40.000 | .1933 | -.0063 |

ALPHA ( 4) = 8.017 BETA ( 2) = -3.872 MACH = .59678 Q = 594.78 P = 2385.7 PN/L = -.8929

SECTION ( 1)BODY FLAP LOWER DEPENDENT VARIABLE CP

| X/LB | 1.0180 | 1.0460 |
|---|---|---|
| PHI | | |
| .000 | .2929 | .0259 |
| 40.000 | .1939 | -.0140 |

ALPHA ( 4) = 7.988 BETA ( 3) = .166 MACH = .59678 Q = 594.78 P = 2385.7 PN/L = -.8929

SECTION ( 1)BODY FLAP LOWER DEPENDENT VARIABLE CP

| X/LB | 1.0180 | 1.0460 |
|---|---|---|
| PHI | | |
| .000 | .2900 | .0257 |
| 40.000 | .1724 | -.0265 |

ALPHA ( 4) = 7.931 BETA ( 4) = 4.229 MACH = .59678 Q = 594.78 P = 2385.7 PN/L = -.8929

SECTION ( 1)BODY FLAP LOWER DEPENDENT VARIABLE CP

| X/LB | 1.0180 | 1.0460 |
|---|---|---|
| PHI | | |
| .000 | .2921 | .0258 |
| 40.000 | .1813 | -.0336 |

AMES 11-073(OA148) -140A .ODY FLAP LWR (XE8G56)

ALPHA 4) = 7.987 BETA ( 5) = 8.286 MACH = .5 = 594.78 P = 2385.7 RN/L = 4.8929

SECTION ( 1)BODY FLAP LOWER DEPENDENT VARIABLE C

| X/LB | 1.0180 | 1.0460 |
|---|---|---|
| PHI | | |
| .000 | .2902 | .0120 |
| 40.000 | .1513 | -.0409 |

ALPHA ( 5) = 11.920 BETA ( 1) = -7.867 MACH = .59670 Q = 594.67 P = 385.8 RN/L = 4.8946

SECTION ( 1)BODY FLAP LOWER DEPENDENT VARIABLE CP

| X/LB | 1.0180 | 1.0460 |
|---|---|---|
| PHI | | |
| .000 | .3221 | .0457 |
| 40.000 | .2190 | .0059 |

ALPHA ( 5) = 11.942 BETA ( 2) = -3.850 MACH = .59670 Q = 594.67 P = 2385.8 RN/L = 4.894E

SECTION ( 1)BODY FLAP LOWER DEPENDENT VARIABLE CP

| X/LB | 1.0180 | 1.0460 |
|---|---|---|
| PHI | | |
| .000 | .3165 | .0368 |
| 40.000 | .2031 | -.0059 |

ALPHA ( 5) = 12.055 BETA ( 3) = .165 MACH = .59670 Q = 594.67 P = 2385.8 RN/L = 4.8946

SECTION ( 1)BODY FLAP LOWER DEPENDENT VARIABLE CP

| X/LB | 1.0180 | 1.0460 |
|---|---|---|
| PHI | | |
| .000 | .3153 | .0377 |
| 40.000 | .1911 | -.0105 |

ALPHA ( 5) = 12.053 BETA ( 4) = 4.239 MACH = .59670 Q = 594.67 P = 2385.8 RN/L = 4.8946

SECTION ( 1)BODY FLAP LOWER DEPENDENT VARIABLE CP

| X/LB | 1.0180 | 1.0460 |
|---|---|---|
| PHI | | |
| .000 | .3149 | .0327 |
| 40.000 | .1773 | -.0203 |

AMES 11-073(OA148) -140A/B/C/R ORB BODY FLAP LWR (XE8G56)

ALPHA ( 5) = 12.101 BETA ( 5) = 8.299 MACH = .59670 Q = 594.67 P = 2385.8 RN/L = 4.8946

SECTION ( 1)BODY FLAP LOWER DEPENDENT VARIABLE CP

| X/LB | 1.0180 | 1.0460 |
|---|---|---|
| PHI | | |
| .000 | .3148 | .0299 |
| 40.000 | .1656 | -.0404 |

AMES 11-073(OA148) -140A/B/C/R ORB BODY FLAP LWR (XEBG57) ( 05 AUG 75 )

REFERENCE DATA

SREF = 2690.0000 SQ.FT. XMRP = 1076.6800 IN. XO
LREF = 474.8000 IN. YMRP = .0000 IN. YO
BREF = 936.0680 IN. ZMRP = 375.0000 IN. ZO
SCALE = .0300

PARAMETRIC DATA

RUDDER = 10.000 SPDBRK = 55.000
BDFLAP = 16.300 L-ELVN = 4.000
R-ELVN = -4.000 MACH = 1.400

ALPHA ( 1) = -4.026 BETA ( 1) = -3.843 MACH = 1.3927 Q = 599.59 P = 441.59 RN/L = 2.9055

SECTION ( 1)BODY FLAP LOWER DEPENDENT VARIABLE CP

| X/LB | 1.0180 | 1.0460 |
|---|---|---|
| PHI | | |
| .000 | .2010 | .1825 |
| 40.000 | .0714 | .0193 |

ALPHA ( 1) = -3.938 BETA ( 2) = .202 MACH = 1.3927 Q = 599.59 P = 441.59 RN/L = 2.9055

SECTION ( 1)BODY FLAP LOWER DEPENDENT VARIABLE CP

| X/LB | 1.0180 | 1.0460 |
|---|---|---|
| PHI | | |
| .000 | .1949 | .1754 |
| 40.000 | .1147 | .0311 |

ALPHA ( 1) = -4.001 BETA ( 3) = 4.282 MACH = 1.3927 Q = 599.59 P = 441.59 RN/L = 2.9055

SECTION ( 1)BODY FLAP LOWER DEPENDENT VARIABLE CP

| X/LB | 1.0180 | 1.0460 |
|---|---|---|
| PHI | | |
| .000 | .1854 | .1712 |
| 40.000 | .1208 | .0658 |

ALPHA ( 2) = .015 BETA ( 1) = -3.863 MACH = 1.3931 Q = 599.59 P = 441.36 RN/L = 2.9062

SECTION ( 1)BODY FLAP LOWER DEPENDENT VARIABLE CP

| X/LB | 1.0180 | 1.0460 |
|---|---|---|
| PHI | | |
| .000 | .2461 | .2232 |
| 40.000 | .1549 | .1024 |

AMES 11-073(OA148) -140A/B/C/R ORB BODY FLAP LWR (XE8G57)

ALPHA ( 2) = .021 BETA ( 2) = .195 MACH = 1.3931 Q = 599.59 P = 441.36 RN/L = 2.9062

SECTION ( 1)BODY FLAP LOWER DEPENDENT VARI .BLE CP

| X/LB | 1.0180 | 1.0460 |
|---|---|---|
| PHI | | |
| .000 | .2502 | .2284 |
| 40.000 | .1485 | .0840 |

ALPHA ( 2) = .016 BETA ( 3) = 4.262 MACH = 1.3931 Q = 599.59 P = 441.36 RN/L = 2.9062

SECTION ( 1)BODY FLAP LOWER DEPENDENT VARIABLE CP

| X/LB | 1.0180 | 1.0460 |
|---|---|---|
| PHI | | |
| .000 | .2391 | .2228 |
| 40.000 | .1625 | .0976 |

ALPHA ( 3) = 3.900 BETA ( 1) = -3.867 MACH = 1.3926 Q = 599.48 P = 441.59 RN/L = 2.9063

SECTION ( 1)BODY FLAP LOWER DEPENDENT VARIABLE CP

| X/LB | 1.0180 | 1.0460 |
|---|---|---|
| PHI | | |
| .000 | .3413 | .3027 |
| 40.000 | .2428 | .1817 |

ALPHA ( 3) = 3.905 BETA ( 2) = .197 MACH = 1.3926 Q = 599.48 P = 441.59 RN/L = 2.9063

SECTION ( 1)BODY FLAP LOWER DEPENDENT VARIABLE CP

| X/LB | 1.0180 | 1.0460 |
|---|---|---|
| PHI | | |
| .000 | .3363 | .2989 |
| 40.000 | .2393 | .1711 |

ALPHA ( 3) = 3.907 BETA ( 3) = 4.252 MACH = 1.3926 Q = 599.48 P = 441.59 RN/L = 2.9063

SECTION ( 1)BODY FLAP LOWER DEPENDENT VARIABLE CP

| X/LB | 1.0180 | 1.0460 |
|---|---|---|
| PHI | | |
| .000 | .3358 | .3034 |
| 40.000 | .2348 | .1697 |

AMES 11-073(OA148) -140:/B/C/R ORB BODY FLAP LWR (XEBG57)

ALPHA ( 4) = 7.945 BETA ( 1) = -3.862 MACH = 1.3931 Q = 599.59 P = 441.36 RN/L = 2.8969

SECTION ( 1)BODY FLAP LOWER DEPENDENT VARIABLE CP

| X/LB | 1.0180 | 1.0460 |
|---|---|---|
| PHI | | |
| .000 | .4465 | .3835 |
| 40.000 | .3640 | .2534 |

ALPHA ( 4) = 7.917 BETA ( 2) = .187 MACH = 1.3931 Q = 599.59 P = 441.36 RN/L = 2.8969

SECTION ( 1)BODY FLAP LOWER DEPENDENT VARIABLE CP

| X/LB | 1.0180 | 1.0460 |
|---|---|---|
| PHI | | |
| .000 | .4364 | .3743 |
| 40.000 | .3466 | .2399 |

ALPHA ( 4) = 7.848 BETA ( 3) = 4.251 MACH = 1.3931 Q = 599.59 P = 441.36 RN/L = 2.8969

SECTION ( 1)BODY FLAP LOWER DEPENDENT VARIABLE CP

| X/LB | 1.0180 | 1.0460 |
|---|---|---|
| PHI | | |
| .000 | .4349 | .3767 |
| 40.000 | .3274 | .2418 |

ALPHA ( 5) = 11.907 BETA ( 1) = -3.847 MACH = 1.3946 Q = 600.23 P = 440.88 RN/L = 2.9052

SECTION ( 1)BODY FLAP LOWER DEPENDENT VARIABLE CP

| X/LB | 1.0180 | 1.0460 |
|---|---|---|
| PHI | | |
| .000 | .5479 | .4438 |
| 40.000 | .4322 | .2781 |

ALPHA ( 5) = 11.890 BETA ( 2) = .186 MACH = 1.3946 Q = 600.23 P = 440.88 RN/L = 2.9052

SECTION ( 1)BODY FLAP LOWER DEPENDENT VARIABLE CP

| X/LB | 1.0180 | 1.0460 |
|---|---|---|
| PHI | | |
| .000 | .5407 | .4482 |
| 40.000 | .4245 | .2913 |

AMES 11-073(OA148) -140A/B/C/R ORB BODY FLAP LWR (XE8G57)

ALPHA ( 5) = 11.884 BETA ( 3) = 4.265 MACH = 1.3946 Q = 600.23 P = 440.88 RN/L = 2.9052

SECTION ( 1)BODY FLAP LOWER DEPENDENT VARIABLE CP

| X/LB | 1.0180 | 1.0460 |
|---|---|---|
| PHI | | |
| .000 | .5403 | .4500 |
| 40.000 | .4143 | .3046 |

ALPHA ( 6) = 15.871 BETA ( 1) = -3.822 MACH = 1.3964 Q = 598.94 P = 438.77 RN/L = 2.9066

SECTION ( 1)BODY FLAP LOWER DEPENDENT VARIABLE CP

| X/LB | 1.0180 | 1.0460 |
|---|---|---|
| PHI | | |
| .000 | .6359 | .5032 |
| 40.000 | .4881 | .3236 |

ALPHA ( 6) = 15.883 BETA ( 2) = .187 MACH = 1.3964 Q = 598.94 P = 438.77 RN/L = 2.9066

SECTION ( 1)BODY FLAP LOWER DEPENDENT VARIABLE CP

| X/LB | 1.0180 | 1.0460 |
|---|---|---|
| PHI | | |
| .000 | .6379 | .5100 |
| 40.000 | .4946 | .3408 |

ALPHA ( 6) = 15.915 BETA ( 3) = 4.292 MACH = 1.3964 Q = 598.94 P = 438.77 RN/L = 2.9066

SECTION ( 1)BODY FLAP LOWER DEPENDENT VARIABLE CP

| X/LB | 1.0180 | 1.0460 |
|---|---|---|
| PHI | | |
| .000 | .6352 | .5167 |
| 40.000 | .4976 | .3547 |

AMES 11-073(OA148) -140A/B/C/R ORB BODY FLAP LWR (XE8G58) ( 05 AUG 75 )

REFERENCE DATA

SREF = 2690.0000 SQ.FT. XMRP = 1076.6800 IN. XO
LREF = 474.8000 IN. YMRP = .0000 IN. YO
BREF = 936.0080 IN. ZMRP = 375.0000 IN. ZO
SCALE = .0300

PARAMETRIC DATA

RUDDER = 10.000 SPDBRK = 55.000
BDFLAP = 16.300 L-ELVN = 4.000
R-ELVN = -4.000 MACH = 1.250

ALPHA ( 1) = -4.015 BETA ( 1) = -3.834 MACH = 1.2474 Q = 600.07 P = 550.87 RN/L = 3.0101

SECTION ( 1)BODY FLAP LOWER DEPENDENT VARIABLE CP

| X/LB | 1.0180 | 1.0460 |
|---|---|---|
| PHI | | |
| .000 | .2204 | .1633 |
| 40.000 | .0768 | .0331 |

ALPHA ( 1) = -4.012 BETA ( 2) = .202 MACH = 1.2474 Q = 600.07 P = 550.87 RN/L = 3.0101

SECTION ( 1)BODY FLAP LOWER DEPENDENT VARIABLE CP

| X/LB | 1.0180 | 1.0460 |
|---|---|---|
| PHI | | |
| .000 | .2062 | .1777 |
| 40.000 | .0719 | .0295 |

ALPHA ( 1) = -4.007 BETA ( 3) = 4.280 MACH = 1.2474 Q = 600.07 P = 550.87 RN/L = 3.0101

SECTION ( 1)BODY FLAP LOWER DEPENDENT VARIABLE CP

| X/LB | 1.0180 | 1.0460 |
|---|---|---|
| PHI | | |
| .000 | .2030 | .1546 |
| 40.000 | .1116 | .0468 |

ALPHA ( 2) = .035 BETA ( 1) = -3.858 MACH = 1.2470 Q = 599.89 P = 551.11 RN/L = 3.0093

SECTION ( 1)BODY FLAP LOWER DEPENDENT VARIABLE CP

| X/LB | 1.0180 | 1.0460 |
|---|---|---|
| PHI | | |
| .000 | .2602 | .2103 |
| 40.000 | .1670 | .1043 |

AMES 11-073(OA148) -140A/B/C/R ORB BODY FLAP LWR (XE8G58)

ALPHA ( 2) = .040 BETA ( 2) = .189 MACH = 1.2470 Q = 599.89 P = 551.11 RN/L = 3.0093

SECTION ( 1)BODY FLAP LOWER DEPENDENT VARIABLE CP

| X/LB | 1.0180 | 1.0460 |
|---|---|---|
| PHI | | |
| .000 | .2760 | .2195 |
| 40.000 | .1476 | .0700 |

ALPHA ( 2) = .037 BETA ( 3) = 4.261 MACH = 1.2470 Q = 599.89 P = 551.11 RN/L = 3.0093

SECTION ( 1)BODY FLAP LOWER DEPENDENT VARIABLE CP

| X/LB | 1.0180 | 1.0460 |
|---|---|---|
| PHI | | |
| .000 | .2557 | .2079 |
| 40.000 | .1623 | .0744 |

ALPHA ( 3) = 3.928 BETA ( 1) = -3.861 MACH = 1.2467 Q = 599.84 P = 551.34 RN/L = 3.0120

SECTION ( 1)BODY FLAP LOWER DEPENDENT VARIABLE CP

| X/LB | 1.0180 | 1.0460 |
|---|---|---|
| PHI | | |
| .000 | .3536 | .2852 |
| 40.000 | .2618 | .1714 |

ALPHA ( 3) = 3.929 BETA ( 2) = .192 MACH = 1.2467 Q = 599.84 P = 551.34 RN/L = 3.0120

SECTION ( 1)BODY FLAP LOWER DEPENDENT VARIABLE CP

| X/LB | 1.0180 | 1.0460 |
|---|---|---|
| PHI | | |
| .000 | .3589 | .2802 |
| 40.000 | .2458 | .1448 |

ALPHA ( 3) = 3.933 BETA ( 3) = 4.251 MACH = 1.2467 Q = 599.84 P = 551.34 RN/L = 3.0120

SECTION ( 1)BODY FLAP LOWER DEPENDENT VARIABLE CP

| X/LB | 1.0180 | 1.0460 |
|---|---|---|
| PHI | | |
| .000 | .3595 | .2824 |
| 40.000 | .2449 | .1325 |

ORIGINAL PAGE IS OF POOR QUALITY

AMES 11-073(OA148) -140A/B/C/R ORB BODY FLAP LWR (XEBC58)

ALPHA ( 4) = 7.966 BETA ( 1) = -3.855 MACH = 1.2463 Q = 599.67 P = 551.57 RN/L = 3.0105

SECTION ( 1)BODY FLAP LOWER DEPENDENT VARIABLE CP

| X/LB | 1.0180 | 1.0460 |
|---|---|---|
| PHI | | |
| .000 | .4601 | .3496 |
| 40.000 | .3666 | .2179 |

ALPHA ( 4) = 7.970 BETA ( 2) = .187 MACH = 1.2463 Q = 599.67 P = 551.57 RN/L = 3.0105

SECTION ( 1)BODY FLAP LOWER DEPENDENT VARIABLE CP

| X/LB | 1.0180 | 1.0460 |
|---|---|---|
| PHI | | |
| .000 | .4643 | .3458 |
| 40.000 | .3469 | .2017 |

ALPHA ( 4) = 7.894 BETA ( 3) = 4.250 MACH = 1.2463 Q = 599.67 P = 551.57 RN/L = 3.0105

SECTION ( 1)BODY FLAP LOWER DEPENDENT VARIABLE CP

| X/LB | 1.0180 | 1.0460 |
|---|---|---|
| PHI | | |
| .000 | .4565 | .3481 |
| 40.000 | .3298 | .1966 |

ALPHA ( 5) = 11.923 BETA ( 1) = -3.838 MACH = 1.2454 Q = 599.32 P = 552.04 RN/L = 3.0114

SECTION ( 1)BODY FLAP LOWER DEPENDENT VARIABLE CP

| X/LB | 1.0180 | 1.0460 |
|---|---|---|
| PHI | | |
| .000 | .5480 | .3999 |
| 40.000 | .4243 | .2438 |

ALPHA ( 5) = 11.931 BETA ( 2) = .197 MACH = 1.245 Q = 599.32 P = 552.04 RN/L = 3.0114

SECTION ( 1)BODY FLAP LOWER DEPENDENT VARIABLE CP

| X/LB | 1.0180 | 1.0460 |
|---|---|---|
| PHI | | |
| .000 | .5435 | .3954 |
| 40.000 | .4046 | .2420 |

AMES 11-073(OA148) -140A/B/C/R ORB BODY FLAP LWR (XE8658)

ALPHA ( 5) = 11.925 BETA ( 3) = 4.259 MACH = 1.2454 Q = 599.32 P = 552.04 RN/L = 3.0114

SECTION ( 1)BODY FLAP LOWER DEPENDENT VARIABLE CP

| X/LB | 1.0180 | 1.0460 |
|---|---|---|
| PHI | | |
| .000 | .5394 | .3963 |
| 40.000 | .3949 | .2331 |

AMES 11-073(OA148) -140A/B/C/R ORB BODY FLAP LWR (XES659) ( 05 AUG 75 )

REFERENCE DATA

SREF = 2690.0000 SQ.FT. XMRP = 1076.6900 IN. XO
LREF = 474.8000 IN. YMRP = .0000 IN. YO
BREF = 936.0000 IN. ZMRP = 375.0000 IN. ZO
SCALE = .0300

PARAMETRIC DATA

RUDDER = 10.000 SPDBRK = 55.000
BDFLAP = 16.300 L-ELVN = 4.000
R-ELVN = -4.000 MACH = 1.100

ALPHA ( 1) = -4.026 BETA ( 1) = -3.831 MACH = 1.1006 Q = 600.08 P = 707.67 RN/L = 3.1805

SECTION ( 1)BODY FLAP LOWER DEPENDENT VARIABLE CP

| X/LB | 1.0180 | 1.0460 |
|---|---|---|
| PHI | | |
| .000 | .2450 | .1622 |
| 40.000 | .1333 | .0693 |

ALPHA ( 1) = -3.894 BETA ( 2) = .203 MACH = 1.1006 Q = 600.08 P = 707.67 RN/L = 3.1805

SECTION ( 1)BODY FLAP LOWER DEPENDENT VARIABLE CP

| X/LB | 1.0180 | 1.0460 |
|---|---|---|
| PHI | | |
| .000 | .2589 | .1958 |
| 40.000 | .1037 | .0694 |

ALPHA ( 1) = -4.013 BETA ( 3) = 4.281 MACH = 1.1006 Q = 600.08 P = 707.67 RN/L = 3.1805

SECTION ( 1)BODY FLAP LOWER DEPENDENT VARIABLE CP

| X/LB | 1.0180 | 1.0460 |
|---|---|---|
| PHI | | |
| .000 | .2328 | .1652 |
| 40.000 | .1150 | .0414 |

ALPHA ( 2) = .051 BETA ( 1) = -3.852 MACH = 1.1008 Q = 600.03 P = 707.43 RN/L = 3.1794

SECTION ( 1)BODY FLAP LOWER DEPENDENT VARIABLE CP

| X/LB | 1.0180 | 1.0460 |
|---|---|---|
| PHI | | |
| .000 | .2860 | .1910 |
| 40.000 | .2142 | .1079 |

AMES 11-073(OA148) -140A/B/C/R ORB BODY FLAP LWR (XEBG59)

ALPHA ( 2) = .053 BETA ( 2) = .191 MACH = 1.1008 Q = 600.03 P = 707.43 RN/L = 3.1794

SECTION ( 1)BODY FLAP LOWER DEPENDENT VARIABLE CP

| X/LB | 1.0180 | 1.0460 |
|---|---|---|
| PHI | | |
| .000 | .3260 | .2100 |
| 40.000 | .1804 | .0833 |

ALPHA ( 2) = .049 BETA ( 3) = 4.255 MACH = 1.1008 Q = 600.03 P = 707.43 RN/L = 3.1794

SECTION ( 1)BODY FLAP LOWER DEPENDENT VARIABLE CP

| X/LB | 1.0180 | 1.0460 |
|---|---|---|
| PHI | | |
| .000 | .2945 | .1917 |
| 40.000 | .1693 | .0613 |

ALPHA ( 3) = 3.965 BETA ( 1) = -3.853 MACH = 1.1009 Q = 600.17 P = 707.44 RN/L = 3.1827

SECTION ( 1)BODY FLAP LOWER DEPENDENT VARIABLE CP

| X/LB | 1.0180 | 1.0460 |
|---|---|---|
| PHI | | |
| .000 | .3701 | .2368 |
| 40.000 | .2732 | .1300 |

ALPHA ( 3) = 3.964 BETA ( 2) = .193 MACH = 1.1009 Q = 600.17 P = 707.44 RN/L = 3.1827

SECTION ( 1)BODY FLAP LOWER DEPENDENT VARIABLE CP

| X/LB | 1.0180 | 1.0460 |
|---|---|---|
| PHI | | |
| .000 | .3819 | .2438 |
| 40.000 | .2665 | .1189 |

ALPHA ( 3) = 3.966 BETA ( 3) = 4.249 MACH = 1.1009 Q = 600.17 P = 707.44 RN/L = 3.1827

SECTION ( 1)BODY FLAP LOWER DEPENDENT VARIABLE CP

| X/LB | 1.0180 | 1.0460 |
|---|---|---|
| PHI | | |
| .000 | .3667 | .2390 |
| 40.000 | .2385 | .0926 |

AMES 11-073(OA148) -140A/B/C/R ORB BODY FLAP LWR (XE9059)

ALPHA ( 4) = 7.909 BETA ( 1) = -2.848 MACH = 1.0993 Q = 599.26 P = 708.35 RN/L = 3.1817

SECTION ( 1)BODY FLAP LOWER DEPENDENT VARIABLE CP

| X/LB | 1.0180 | 1.0460 |
|---|---|---|
| PHI | | |
| .000 | .4521 | .2762 |
| 40.000 | .3247 | .1439 |

ALPHA ( 4) = 7.912 BETA ( 2) = .189 MACH = 1.0993 Q = 599.26 P = 708.35 RN/L = 3.1817

SECTION ( 1)BODY FLAP LOWER DEPENDENT VARIABLE CP

| X/LB | 1.0180 | 1.0460 |
|---|---|---|
| PHI | | |
| .000 | .4620 | .2823 |
| 40.000 | .3346 | .1405 |

ALPHA ( 4) = 7.911 BETA ( 3) = 4.247 MACH = 1.0993 Q = 599.26 P = 708.35 RN/L = 3.1817

SECTION ( 1)BODY FLAP LOWER DEPENDENT VARIABLE CP

| X/LB | 1.0180 | 1.0460 |
|---|---|---|
| PHI | | |
| .000 | .4509 | .2822 |
| 40.000 | .3071 | .1270 |

ALPHA ( 5) = 11.959 BETA ( 1) = -3.832 MACH = 1.0972 Q = 598.33 P = 710.00 RN/L = 3.1878

SECTION ( 1)BODY FLAP LOWER DEPENDENT VARIABLE CP

| X/LB | 1.0180 | 1.0460 |
|---|---|---|
| PHI | | |
| .000 | .5249 | .3107 |
| 40.000 | .4020 | .1684 |

ALPHA ( 5) = 11.872 BETA ( 2) = .197 MACH = 1.0972 Q = 598.33 P = 710.00 RN/L = 3.1878

SECTION ( 1)BODY FLAP LOWER DEPENDENT VARIABLE CP

| X/LB | 1.0180 | 1.0460 |
|---|---|---|
| PHI | | |
| .000 | .5269 | .3140 |
| 40.000 | .3926 | .1664 |

AMES 11-073(OA148) -140A/B/C/R ORB BODY FLAP LWR (XE8G59)

ALPHA ( 5) = 11.865 BETA ( 3) = 4.258 MACH = 1.0972 Q = 598.33 P = 710.00 RN/L = 3.1878

SECTION ( 1)BODY FLAP LOWER DEPENDENT VARIABLE CP

| X/LB | 1.0180 | 1.0450 |
|---|---|---|
| PHI | | |
| .000 | .5204 | .3129 |
| 40.000 | .3613 | .1448 |

AMES 11-073(OA148) -140A/B/C/R ORB BODY FLAP LWR (XE8G60) ( 05 AUG 75 )

REFERENCE DATA

SREF = 2690.0000 SQ.FT. XMRP = 1076.6800 IN. XO
LREF = 474.8000 IN. YMRP = .0000 IN. YO
BREF = 936.0680 IN. ZMRP = 375.0000 IN. ZO
SCALE = .0300

PARAMETRIC DATA

RUDDER = 10.000 SPDBRK = 55.000
BDFLAP = 16.300 L-ELVN = 4.000
R-ELVN = -4.000 MACH = .900

ALPHA ( 1) = -4.026 BETA ( 1) = -3.841 MACH = .89803 Q = 598.77 P = 1060.7 RN/L = 3.5631

SECTION ( 1)BODY FLAP LOWER DEPENDENT VARIABLE CP

| X/LB | 1.0180 | 1.0460 |
|---|---|---|
| PHI | | |
| .000 | .2809 | .0852 |
| 40.000 | .1715 | -.0010 |

ALPHA ( 1) = -4.026 BETA ( 2) = .202 MACH = .89803 Q = 598.77 P = 1060.7 RN/L = 3.5631

SECTION ( 1)BODY FLAP LOWER DEPENDENT VARIABLE CP

| X/LB | 1.0180 | 1.0460 |
|---|---|---|
| PHI | | |
| .000 | .3170 | .1048 |
| 40.000 | .1418 | .0039 |

ALPHA ( 1) = -3.984 BETA ( 3) = 4.285 MACH = .89803 Q = 598.77 P = 1060.7 RN/L = 3.5631

SECTION ( 1)BODY FLAP LOWER DEPENDENT VARIABLE CP

| X/LB | 1.0180 | 1.0460 |
|---|---|---|
| PHI | | |
| .000 | .2964 | .0982 |
| 40.000 | .1945 | .0048 |

ALPHA ( 2) = .056 BETA ( 1) = -3.856 MACH = .89813 Q = 598.75 P = 1060.5 RN/L = 3.5631

SECTION ( 1)BODY FLAP LOWER DEPENDENT VARIABLE CP

| X/LB | 1.0180 | 1.0460 |
|---|---|---|
| PHI | | |
| .000 | .2896 | .0926 |
| 40.000 | .2080 | .0169 |

AMES 11-073(OA148) -140A/B/C/R ORB BODY FLAP LWR (XE8060)

ALPHA ( 2) = .056 BETA ( 2) = .186 MACH = .89813 Q = 598.75 P = 1060.5 RN/L = 3.5631

SECTION ( 1)BODY FLAP LOWER DEPENDENT VARIABLE CP

| X/LB | 1.0180 | 1.0460 |
|---|---|---|
| PHI | | |
| .000 | .3141 | .0994 |
| 40.000 | .1915 | -.0015 |

ALPHA ( 2) = .048 BETA ( 3) = 4.260 MACH = .89813 Q = 598.75 P = 1060.5 RN/L = 3.5631

SECTION ( 1)BODY FLAP LOWER DEPENDENT VARIABLE CP

| X/LB | 1.0180 | 1.0460 |
|---|---|---|
| PHI | | |
| .000 | .2978 | .0991 |
| 40.000 | .1860 | -.0081 |

ALPHA ( 3) = 3.975 BETA ( 1) = -3.861 MACH = .89723 Q = 597.99 P = 1061.2 RN/L = 3.5607

SECTION ( 1)BODY FLAP LOWER DEPENDENT VARIABLE CP

| X/LB | 1.0180 | 1.0460 |
|---|---|---|
| PHI | | |
| .000 | .3407 | .1113 |
| 40.000 | .2391 | .0285 |

ALPHA ( 3) = 4.019 BETA ( 2) = .193 MACH = .89723 Q = 597.99 P = 1061.2 RN/L = 3.5607

SECTION ( 1)BODY FLAP LOWER DEPENDENT VARIABLE CP

| X/LB | 1.0180 | 1.0460 |
|---|---|---|
| PHI | | |
| .000 | .3447 | .1142 |
| 40.000 | .2094 | .0064 |

ALPHA ( 3) = 3.944 BETA ( 3) = 4.252 MACH = .89723 Q = 597.99 P = 1061.2 RN/L = 3.5607

SECTION ( 1)BODY FLAP LOWER DEPENDENT VARIABLE CP

| X/LB | 1.0180 | 1.0460 |
|---|---|---|
| PHI | | |
| .000 | .3470 | .1189 |
| 40.000 | .2081 | -.0099 |

ORIGINAL PAGE IS OF POOR QUALITY

AMES 11-073(OA148) -140A/B/C/R ORB BODY FLAP LWR (XE3G60)

ALPHA ( 4) = 8.020 BETA ( 1) = -3.857 MACH = .89903 Q = 599.30 P = 1059.3 RN/L = 3.5654

SECTION ( 1)BODY FLAP LOWER DEPENDENT VARIABLE CP

| X/LB | 1.0180 | 1.0460 |
|---|---|---|
| PHI | | |
| .000 | .3788 | .1250 |
| 40.000 | .2455 | .0317 |

ALPHA ( 4) = 8.028 BETA ( 2) = .194 MACH = .89903 Q = 599.30 P = 1059.3 RN/L = 3.5654

SECTION ( 1)BODY FLAP LOWER DEPENDENT VARIABLE CP

| X/LB | 1.0180 | 1.0460 |
|---|---|---|
| PHI | | |
| .000 | .3828 | .1260 |
| 40.000 | .2366 | .0103 |

ALPHA ( 4) = 8.024 BETA ( 3) = 4.248 MACH = .89903 Q = 599.30 P = 1059.3 RN/L = 3.5654

SECTION ( 1)BODY FLAP LOWER DEPENDENT VARIABLE CP

| X/LB | 1.0180 | 1.0460 |
|---|---|---|
| PHI | | |
| .000 | .3870 | .1295 |
| 40.000 | .2313 | -.0066 |

ALPHA ( 5) = 11.919 BETA ( 1) = -3.839 MACH = .89963 Q = 599.94 P = 1059.0 RN/L = 3.5645

SECTION ( 1)BODY FLAP LOWER DEPENDENT VARIABLE CP

| X/LB | 1.0180 | 1.0460 |
|---|---|---|
| PHI | | |
| .000 | .4046 | .1256 |
| 40.000 | .2546 | .0253 |

ALPHA ( 5) = 11.929 BETA ( 2) = .180 MACH = .89963 Q = 599.94 P = 1059.0 RN/L = 3.5645

SECTION ( 1)BODY FLAP LOWER DEPENDENT VARIABLE CP

| X/LB | 1.0180 | 1.0460 |
|---|---|---|
| PHI | | |
| .000 | .4070 | .1330 |
| 40.000 | .2589 | .0042 |

AMES 11-073(OA148) -140A/B/C/R ORB BODY FLAP LWR (XE8G60)

ALPHA ( 5) = 11.915 BETA ( 3) = 4.268 MACH = .89963 Q = 599.94 P = 1059.0 RN/L = 3.5645

SECTION ( 1)BODY FLAP LOWER DEPENDENT VARIABLE CP

| X/LB | 1.0180 | 1.0460 |
|---|---|---|
| PHI | | |
| .000 | .4133 | .1358 |
| 40.000 | .2416 | -.0110 |

AMES 11-073(OA148) -140A/B/C/R ORB BODY FLAP LWR (XEBG61) ( 05 AUG 75 )

REFERENCE DATA

SREF = 2690.0000 SQ.FT. XMRP = 1076.6900 IN. XO
LREF = 474.8000 IN. YMRP = .0000 IN. YO
BREF = 936.0680 IN. ZMRP = 375.0000 IN. ZO
SCALE = .0300

PARAMETRIC DATA

RUDDER = 10.000 SPDBRK = 55.000
BDFLAP = 16.300 L-ELVN = 4.000
R-ELVN = -4.000 MACH = .600

ALPHA ( 1) = -4.014 BETA ( 1) = -7.854 MACH = .59638 Q = 594.21 P = 2386.5 RN/L = 4.8411

SECTION ( 1)BODY FLAP LOWER DEPENDENT VARIABLE CP

| X/LB | 1.0180 | 1.0460 |
|---|---|---|
| PHI | | |
| .000 | .2163 | .0013 |
| 40.000 | .1303 | -.0471 |

ALPHA ( 1) = -3.998 BETA ( 2) = -3.832 MACH = .59638 Q = 594.21 P = 2386.5 RN/L = 4.8411

SECTION ( 1)BODY FLAP LOWER DEPENDENT VARIABLE CP

| X/LB | 1.0180 | 1.0460 |
|---|---|---|
| PHI | | |
| .000 | .2262 | .0028 |
| 40.000 | .1380 | -.0563 |

ALPHA ( 1) = -3.980 BETA ( 3) = .201 MACH = .59638 Q = 594.21 P = 2386.5 RN/L = 4.8411

SECTION ( 1)BODY FLAP LOWER DEPENDENT VARIABLE CP

| X/LB | 1.0180 | 1.0460 |
|---|---|---|
| PHI | | |
| .000 | .2482 | .0125 |
| 40.000 | .1193 | -.0618 |

ALPHA ( 1) = -3.999 BETA ( 4) = 4.282 MACH = .59638 Q = 594.21 P = 2386.5 RN/L = 4.8411

SECTION ( 1)BODY FLAP LOWER DEPENDENT VARIABLE CP

| X/LB | 1.0180 | 1.0460 |
|---|---|---|
| PHI | | |
| .000 | .2312 | .0049 |
| 40.000 | .1329 | -.0676 |

AMES 11-073(OA148) -140A/B/C/R ORB BODY FLAP LWR (XE8G61)

ALPHA ( 1) = -4.005 BETA ( 5) = 8.352 MACH = .59638 Q = 594.21 P = 2386.5 RN/L = 4.8411

SECTION ( 1)BODY FLAP LOWER DEPENDENT VARIABLE CP

| X/LB | 1.0180 | 1.0460 |
|---|---|---|
| PHI | | |
| .000 | .2216 | .0050 |
| 40.000 | .1107 | -.0752 |

ALPHA ( 2) = .015 BETA ( 1) = -7.895 MACH = .59624 Q = 593.85 P = 2386.1 RN/L = 4.8452

SECTION ( 1)BODY FLAP LOWER DEPENDENT VARIABLE CP

| X/LB | 1.0180 | 1.0460 |
|---|---|---|
| PHI | | |
| .000 | .2514 | .0081 |
| 40.000 | .1577 | -.0410 |

ALPHA ( 2) = .022 BETA ( 2) = -3.851 MACH = .59624 Q = 593.85 P = 2386.1 RN/L = 4.8452

SECTION ( 1)BODY FLAP LOWER DEPENDENT VARIABLE CP

| X/LB | 1.0180 | 1.0460 |
|---|---|---|
| PHI | | |
| .000 | .2379 | .0099 |
| 40.000 | .1615 | -.0399 |

ALPHA ( 2) = .105 BETA ( 3) = .189 MACH = .59624 Q = 593.85 P = 2386.1 RN/L = 4.8452

SECTION ( 1)BODY FLAP LOWER DEPENDENT VARIABLE CP

| X/LB | 1.0180 | 1.0460 |
|---|---|---|
| PHI | | |
| .000 | .2449 | .0115 |
| 40.000 | .1363 | -.0604 |

ALPHA ( 2) = .100 BETA ( 4) = 4.264 MACH = .59624 Q = 593.85 P = 2386.1 RN/L = 4.8452

SECTION ( 1)BODY FLAP LOWER DEPENDENT VARIABLE CP

| X/LB | 1.0180 | 1.0460 |
|---|---|---|
| PHI | | |
| .000 | .2423 | .0173 |
| 40.000 | .1230 | -.0720 |

AMES 11-073(OA148) -140A/B/C/R ORB BODY FLAP LWR (XE8G61)

ALPHA ( 2) = .094 BETA ( 5) = 8.317 MACH = .59624 Q = 593.85 P = 2386.1 RN/L = 4.8452

SECTION ( 1)BODY FLAP LOWER DEPENDENT VARIABLE CP

| X/LB | 1.0180 | 1.0460 |
|---|---|---|
| PHI | | |
| .000 | .2560 | .0099 |
| 40.000 | .1155 | -.0809 |

ALPHA ( 3) = 4.024 BETA ( 1) = -7.901 MACH = .59706 Q = 595.26 P = 2385.4 RN/L = 4.8521

SECTION ( 1)BODY FLAP LOWER DEPENDENT VARIABLE CP

| X/LB | 1.0180 | 1.0460 |
|---|---|---|
| PHI | | |
| .000 | .2707 | .0091 |
| 40.000 | .1783 | -.0399 |

ALPHA ( 3) = 4.026 BETA ( 2) = -3.849 MACH = .59706 Q = 595.26 P = 2385.4 RN/L = 4.8521

SECTION ( 1)BODY FLAP LOWER DEPENDENT VARIABLE CP

| X/LB | 1.0180 | 1.0460 |
|---|---|---|
| PHI | | |
| .000 | .2602 | .0161 |
| 40.000 | .1713 | -.0419 |

ALPHA ( 3) = 4.034 BETA ( 3) = .195 MACH = .59706 Q = 595.26 P = 2385.4 RN/L = 4.8521

SECTION ( 1)BODY FLAP LOWER DEPENDENT VARIABLE CP

| X/LB | 1.0180 | 1.0460 |
|---|---|---|
| PHI | | |
| .000 | .2637 | .0146 |
| 40.000 | [illegible] | -.0543 |

ALPHA ( 3) = 4.044 BETA ( 4) = 4.254 MACH = .59706 Q = 595.26 P = 2385.4 RN/L = 4.8521

SECTION ( 1)BODY FLAP LOWER DEPENDENT VARIABLE CP

| X/LB | 1.0180 | 1.0460 |
|---|---|---|
| PHI | | |
| .000 | .2725 | .0225 |
| 40.000 | .1358 | -.0682 |

AMES 11-073(OA148) -140A/B/C/R ORB BODY FLAP LWR (XE8G61)

ALPHA ( 3) = 4.047 BETA ( 5) = 8.299 MACH = .59706 Q = 595.26 P = 2385.4 RN/L = 4.8521

SECTION ( 1)BODY FLAP LOWER DEPENDENT VARIABLE CP

| X/LB | 1.0180 | 1.0460 |
|---|---|---|
| PHI | | |
| .000 | .2801 | .0174 |
| 40.000 | .1307 | -.0695 |

ALPHA ( 4) = 8.028 BETA ( 1) = -7.897 MACH = .59720 Q = 595.49 P = 2385.3 RN/L = 4.8534

SECTION ( 1)BODY FLAP LOWER DEPENDENT VARIABLE CP

| X/LB | 1.0180 | 1.0460 |
|---|---|---|
| PHI | | |
| .000 | .2878 | .0167 |
| 40.000 | .1889 | -.0269 |

ALPHA ( 4) = 8.037 BETA ( 2) = -3.847 MACH = .59720 Q = 595.49 P = 2385.3 RN/L = 4.8534

SECTION ( 1)BODY FLAP LOWER DEPENDENT VARIABLE CP

| X/LB | 1.0180 | 1.0460 |
|---|---|---|
| PHI | | |
| .000 | .2916 | .0237 |
| 40.000 | .1839 | -.0300 |

ALPHA ( 4) = 8.042 BETA ( 3) = .196 MACH = .59720 Q = 595.49 P = 2385.3 RN/L = 4.8534

SECTION ( 1)BODY FLAP LOWER DEPENDENT VARIABLE CP

| X/LB | 1.0180 | 1.0460 |
|---|---|---|
| PHI | | |
| .000 | .2919 | .0293 |
| 40.000 | .1704 | -.0391 |

ALPHA ( 4) = 7.960 BETA ( 4) = 4.251 MACH = .59720 Q = 595.49 P = 2385.3 RN/L = 4.8534

SECTION ( 1)BODY FLAP LOWER DEPENDENT VARIABLE CP

| X/LB | 1.0180 | 1.0460 |
|---|---|---|
| PHI | | |
| .000 | .2969 | .0303 |
| 40.000 | .1558 | -.0518 |

AMES 11-073(OA148) -140A/B/C/R ORB BODY FLAP LWR (XEB061)

ALPHA ( 4) = 7.955 BETA ( 5) = 8.305 MACH = .59720 Q = 595.49 P = 2385.3 RN/L = 4.8534

SECTION ( 1)BODY FLAP LOWER DEPENDENT VARIABLE CP

| X/LB | 1.0180 | 1.0460 |
|---|---|---|
| PHI | | |
| .000 | .3008 | .0321 |
| 40.000 | .1546 | -.0565 |

ALPHA ( 5) = 11.943 BETA ( 1) = -7.853 MACH = .59660 Q = 594.44 P = 2386.0 RN/L = 4.8439

SECTION ( 1)BODY FLAP LOWER DEPENDENT VARIABLE CP

| X/LB | 1.0180 | 1.0460 |
|---|---|---|
| PHI | | |
| .000 | .3147 | .0355 |
| 40.000 | .2067 | -.0013 |

ALPHA ( 5) = 11.962 BETA ( 2) = -3.827 MACH = .59660 Q = 594.44 P = 2386.0 RN/L = 4.8439

SECTION ( 1)BODY FLAP LOWER DEPENDENT VARIABLE CP

| X/LB | 1.0180 | 1.0460 |
|---|---|---|
| PHI | | |
| .000 | .3129 | .0418 |
| 40.000 | .1979 | -.0191 |

ALPHA ( 5) = 11.967 BETA ( 3) = .197 MACH = .59660 Q = 594.44 P = 2386.0 RN/L = 4.8439

SECTION ( 1)BODY FLAP LOWER DEPENDENT VARIABLE CP

| X/LB | 1.0180 | 1.0460 |
|---|---|---|
| PHI | | |
| .000 | .3191 | .0426 |
| 40.000 | .1909 | -.0301 |

ALPHA ( 5) = 11.963 BETA ( 4) = 4.259 MACH = .59660 Q = 594.44 P = 2386.0 RN/L = 4.8439

SECTION ( 1)BODY FLAP LOWER DEPENDENT VARIABLE CP

| X/LB | 1.0180 | 1.0460 |
|---|---|---|
| PHI | | |
| .000 | .3216 | .0457 |
| 40.000 | .1756 | -.0439 |

AMES 11-073(OA148) -140A/B/C/R ORB BODY FLAP LWR (XEBG61)

ALPHA ( 5) = 11.951 BETA ( 5) = 8.316 MACH = .59660 Q = 594.44 P = 2386.0 RN/L = 4.8439

SECTION ( 1)BODY FLAP LOWER DEPENDENT VARIABLE CP

| X/LB | 1.0180 | 1.0460 |
|---|---|---|
| PHI | | |
| .000 | .3234 | .0508 |
| 40.000 | .1697 | -.0369 |

AMES 11-073(OA148) -140A/B/C/R ORB BODY FLAP LWR (XE8G62) ( 05 AUG 75 )

REFERENCE DATA

SREF = 2690.0000 SQ.FT. XMRP = 1076.6800 IN. XO
LREF = 474.8000 IN. YMRP = .0000 IN. YO
BREF = 936.0580 IN. ZMRP = 375.0000 IN. ZO
SCALE = .0300

PARAMETRIC DATA

RUDDER = 5.000 SPDBRK = 55.000
BDFLAP = 16.300 L-ELVN = -4.000
R-ELVN = -4.000 MACH = 1.400

ALPHA ( 1) = -4.059 BETA ( 1) = -3.849 MACH = 1.3925 Q = 599.90 P = 442.06 RN/L = 2.9210

SECTION ( 1)BODY FLAP LOWER DEPENDENT VARIABLE CP

| X/LB | 1.0180 | 1.0460 |
|---|---|---|
| PHI | | |
| .000 | .1870 | .1590 |
| 40.000 | .0387 | -.0171 |

ALPHA ( 1) = -3.922 BETA ( 2) = .195 MACH = 1.3925 Q = 599.99 P = 442.06 RN/L = 2.9210

SECTION ( 1)BODY FLAP LOWER DEPENDENT VARIABLE CP

| X/LB | 1.0180 | 1.0460 |
|---|---|---|
| PHI | | |
| .000 | .1690 | .1512 |
| 40.000 | .0818 | .0437 |

ALPHA ( 1) = -3.930 BETA ( 3) = 4.280 MACH = 1.3925 Q = 599.99 P = 442.06 RN/L = 2.9210

SECTION ( 1)BODY FLAP LOWER DEPENDENT VARIABLE CP

| X/LB | 1.0180 | 1.0460 |
|---|---|---|
| PHI | | |
| .000 | .1782 | .1517 |
| 40.000 | .0756 | .0467 |

ALPHA ( 2) = .024 BETA ( 1) = -3.867 MACH = 1.3922 Q = 599.78 P = 442.06 RN/L = 2.9172

SECTION ( 1)BODY FLAP LOWER DEPENDENT VARIABLE CP

| X/LB | 1.0180 | 1.0460 |
|---|---|---|
| PHI | | |
| .000 | .2364 | .2106 |
| 40.000 | .1417 | .0725 |

AMES 11-073(OA148) -140A/B/C/R ORB BODY FLAP LWR (XE8062)

ALPHA ( 2) = .029 BETA ( 2) = .185 MACH = 1.3922 Q = 599.78 P = 442.06 RN/L = 2.9172

SECTION ( 1)BODY FLAP LOWER DEPENDENT VARIABLE CP

| X/LB | 1.0180 | 1.0460 |
|---|---|---|
| PHI | | |
| .000 | .2404 | .2105 |
| 40.000 | .1212 | .0804 |

ALPHA ( 2) = .025 BETA ( 3) = 4.257 MACH = 1.3922 Q = 599.78 P = 442.06 RN/L = 2.9172

SECTION ( 1)BODY FLAP LOWER DEPENDENT VARIABLE CP

| X/LB | 1.0180 | 1.0460 |
|---|---|---|
| PHI | | |
| .000 | .2335 | .2076 |
| 40.000 | .1295 | .0857 |

ALPHA ( 3) = 3.958 BETA ( 1) = -3.867 MACH = 1.3919 Q = 599.88 P = 442.29 RN/L = 2.9189

SECTION ( 1)BODY FLAP LOWER DEPENDENT VARIABLE CP

| X/LB | 1.0180 | 1.0460 |
|---|---|---|
| PHI | | |
| .000 | .3299 | .2858 |
| 40.000 | .2323 | .1444 |

ALPHA ( 3) = 3.958 BETA ( 2) = .187 MACH = 1.3919 Q = 599.88 P = 442.29 RN/L = 2.9189

SECTION ( 1)BODY FLAP LOWER DEPENDENT VARIABLE CP

| X/LB | 1.0180 | 1.0460 |
|---|---|---|
| PHI | | |
| .000 | .3244 | .2798 |
| 40.000 | .2078 | .1385 |

ALPHA ( 3) = 3.963 BETA ( 3) = 4.246 MACH = 1.3919 Q = 599.88 P = 442.29 RN/L = 2.9189

SECTION ( 1)BODY FLAP LOWER DEPENDENT VARIABLE CP

| X/LB | 1.0180 | 1.0460 |
|---|---|---|
| PHI | | |
| .000 | .3283 | .2864 |
| 40.000 | .2011 | .1457 |

ORIGINAL PAGE IS OF POOR QUALITY

AMES 11-073(OA148) -140A/B/C/R ORB BODY FLAP LWR (XEB062)

ALPHA ( 4) = 7.927 BETA ( 1) = -3.865 MACH = 1.3932 Q = 600.00 P = 441.59 RN/L = 2.9182

SECTION ( 1)BODY FLAP LOWER DEPENDENT VARIABLE CP

| X/LB | 1.0180 | 1.0460 |
|---|---|---|
| PHI | | |
| .000 | .4309 | .3610 |
| 40.000 | .3332 | .1945 |

ALPHA ( 4) = 7.932 BETA ( 2) = .179 MACH = 1.3932 Q = 600.00 P = 441.59 RN/L = 2.9182

SECTION ( 1)BODY FLAP LOWER DEPENDENT VARIABLE CP

| X/LB | 1.0180 | 1.0460 |
|---|---|---|
| PHI | | |
| .000 | .4233 | .3568 |
| 40.000 | .2952 | .2022 |

ALPHA ( 4) = 7.933 BETA ( 3) = 4.245 MACH = 1.3932 Q = 600.00 P = 441.59 RN/L = 2.9182

SECTION ( 1)BODY FLAP LOWER DEPENDENT VARIABLE CP

| X/LB | 1.0180 | 1.0460 |
|---|---|---|
| PHI | | |
| .000 | .4222 | .3616 |
| 40.000 | .2904 | .2122 |

ALPHA ( 5) = 11.912 BETA ( 1) = -3.854 MACH = 1.3916 Q = 599.87 P = 442.53 RN/L = 2.9199

SECTION ( 1)BODY FLAP LOWER DEPENDENT VARIABLE CP

| X/LB | 1.0180 | 1.0460 |
|---|---|---|
| PHI | | |
| .000 | .5221 | .4229 |
| 40.000 | .3765 | .2549 |

ALPHA ( 5) = 11.921 BETA ( 2) = .184 MACH = 1.3916 Q = 599.87 P = 442.53 RN/L = 2.9199

SECTION ( 1)BODY FLAP LOWER DEPENDENT VARIABLE CP

| X/LB | 1.0180 | 1.0460 |
|---|---|---|
| PHI | | |
| .000 | .5196 | .4263 |
| 40.000 | .3783 | .2699 |

AMES 11-073(OA148) -140A/B/C/R ORB BODY FLAP LWR (XE8G62)

ALPHA ( 5) = 11.919 BETA ( 3) = 4.258 MACH = 1.3916 Q = 599.87 P = 442.53 RN/L = 2.9199

SECTION ( 1)BODY FLAP LOWER DEPENDENT VARIABLE CP

| X/LB | 1.0180 | 1.0460 |
|---|---|---|
| PHI | | |
| .000 | .5182 | .4245 |
| 40.000 | .3707 | .2813 |

ALPHA ( 6) = 15.912 BETA ( 1) = -3.830 MACH = 1.3897 Q = 599.83 P = 443.71 RN/L = 2.9243

SECTION ( 1)BODY FLAP LOWER DEPENDENT VARIABLE CP

| X/LB | 1.0180 | 1.0460 |
|---|---|---|
| PHI | | |
| .000 | .6118 | .4860 |
| 40.000 | .4658 | .3217 |

ALPHA ( 6) = 15.924 BETA ( 2) = .184 MACH = 1.3897 Q = 599.83 P = 443.71 RN/L = 2.9243

SECTION ( 1)BODY FLAP LOWER DEPENDENT VARIABLE CP

| X/LB | 1.0180 | 1.0460 |
|---|---|---|
| PHI | | |
| .000 | .6105 | .4897 |
| 40.000 | .4613 | .3358 |

ALPHA ( 6) = 15.916 BETA ( 3) = 4.288 MACH = 1.3897 Q = 599.83 P = 443.71 RN/L = 2.9243

SECTION ( 1)BODY FLAP LOWER DEPENDENT VARIABLE CP

| X/LB | 1.0180 | 1.0460 |
|---|---|---|
| PHI | | |
| .000 | .6134 | .4874 |
| 40.000 | .4492 | .3372 |

AMES 11-073(OA148) -140A/B/C/R ORB BODY FLAP LWR (XE8063) ( 05 AUG 75 )

REFERENCE DATA

SREF = 2690.0000 SQ.FT. XMRP = 1076.6800 IN. XO
LREF = 474.8000 IN. YMRP = .0000 IN. YO
BREF = 936.0680 IN. ZMRP = 375.0000 IN. ZO
SCALE = .0300

PARAMETRIC DATA

RUDDER = 5.000 SPDBRK = 55.000
BDFLAP = 16.300 L-ELVN = -4.000
R-ELVN = -4.000 MACH = 1.250

ALPHA ( 1) = -4.050 BETA ( 1) = -3.840 MACH = 1.2459 Q = 600.11 P = 552.28 RN/L = 3.0241

SECTION ( 1)BODY FLAP LOWER DEPENDENT VARIABLE CP

| X/LB | 1.0180 | 1.0460 |
|---|---|---|
| PHI | | |
| .000 | .2003 | .1470 |
| 40.000 | .0272 | -.0169 |

ALPHA ( 1) = -3.916 BETA ( 2) = .196 MACH = 1.2459 Q = 600.11 P = 552.28 RN/L = 3.0241

SECTION ( 1)BODY FLAP LOWER DEPENDENT VARIABLE CP

| X/LB | 1.0180 | 1.0460 |
|---|---|---|
| PHI | | |
| .000 | .1847 | .1454 |
| 40.000 | .0593 | .0150 |

ALPHA ( 1) = -3.923 BETA ( 3) = 4.275 MACH = 1.2459 Q = 600.11 P = 552.28 RN/L = 3.0241

SECTION ( 1)BODY FLAP LOWER DEPENDENT VARIABLE CP

| X/LB | 1.0180 | 1.0460 |
|---|---|---|
| PHI | | |
| .000 | .1952 | .1401 |
| 40.000 | .0690 | .0214 |

ALPHA ( 2) = .044 BETA ( 1) = -3.864 MACH = 1.2451 Q = 593.58 P = 552.51 RN/L = 3.0238

SECTION ( 1)BODY FLAP LOWER DEPENDENT VARIABLE CP

| X/LB | 1.0180 | 1.0460 |
|---|---|---|
| PHI | | |
| .000 | .2480 | .1919 |
| 40.000 | .1393 | .0670 |

AMES 11-073(OA148) -140A/B/C/R ORB BODY FLAP LWR (XE8G53)

ALPHA ( 2) = .050 BETA ( 2) = .180 MACH = 1.2451 Q = 599.58 P = 552.51 RN/L = 3.0238

SECTION ( 1)BODY FLAP LOWER DEPENDENT VARIABLE CP

| X/LB | 1.0180 | 1.0460 |
|---|---|---|
| PHI | | |
| .000 | .2603 | .1961 |
| 40.000 | .1174 | .0561 |

ALPHA ( 2) = .046 BETA ( 3) = 4.256 MACH = 1.2451 Q = 599.58 P = 552.51 RN/L = 3.0238

SECTION ( 1)BODY FLAP LOWER DEPENDENT VARIABLE CP

| X/LB | 1.0180 | 1.0460 |
|---|---|---|
| PHI | | |
| .000 | .2438 | .1869 |
| 40.000 | .1298 | .0529 |

ALPHA ( 3) = 3.990 BETA ( 1) = -3.864 MACH = 1.2448 Q = 599.34 P = 552.51 RN/L = 3.0213

SECTION ( 1)BODY FLAP LOWER DEPENDENT VARIABLE CP

| X/LB | 1.0180 | 1.0460 |
|---|---|---|
| PHI | | |
| .000 | .3491 | .2532 |
| 40.000 | .2313 | .1376 |

ALPHA ( 3) = 3.991 BETA ( 2) = .185 MACH = 1.2448 Q = 599.34 P = 552.51 RN/L = 3.0213

SECTION ( 1)BODY FLAP LOWER DEPENDENT VARIABLE CP

| X/LB | 1.0180 | 1.0460 |
|---|---|---|
| PHI | | |
| .000 | .3456 | .2614 |
| 40.000 | .2033 | .1087 |

ALPHA ( 3) = 3.994 BETA ( 3) = 4.245 MACH = 1.2448 Q = 599.34 P = 552.51 RN/L = 3.0213

SECTION ( 1)BODY FLAP LOWER DEPENDENT VARIABLE CP

| X/LB | 1.0180 | 1.0460 |
|---|---|---|
| PHI | | |
| .000 | .3499 | .2645 |
| 40.000 | .2029 | .1048 |

AMES 11-073(OA148) -140A/B/C/R ORB BODY FLAP LWR (XE6G63)

ALPHA ( 4) = 7.968 BETA ( 1) = -3.863 MACH = 1.2457 Q = 599.38 P = 551.80 RN/L = 3.0207

SECTION ( 1)BODY FLAP LOWER DEPENDENT VARIABLE CP

| X/LB | 1.0180 | 1.0460 |
|---|---|---|
| PHI | | |
| .000 | .4400 | .3263 |
| 40.000 | .2945 | .1703 |

ALPHA ( 4) = 7.973 BETA ( 2) = .179 MACH = 1.2457 Q = 599.38 P = 551.80 RN/L = 3.0207

SECTION ( 1)BODY FLAP LOWER DEPENDENT VARIABLE CP

| X/LB | 1.0180 | 1.0460 |
|---|---|---|
| PHI | | |
| .000 | .4408 | .3243 |
| 40.000 | .2783 | .1563 |

ALPHA ( 4) = 7.897 BETA ( 3) = 4.244 MACH = 1.2457 Q = 599.38 P = 551.80 RN/L = 3.0207

SECTION ( 1)BODY FLAP LOWER DEPENDENT VARIABLE CP

| X/LB | 1.0180 | 1.0460 |
|---|---|---|
| PHI | | |
| .000 | .4438 | .3289 |
| 40.000 | .2777 | .1599 |

ALPHA ( 5) = 11.969 BETA ( 1) = -3.850 MACH = 1.2456 Q = 599.56 P = 552.04 RN/L = 3.0223

SECTION ( 1)BODY FLAP LOWER DEPENDENT VARIABLE CP

| X/LB | 1.0180 | 1.0460 |
|---|---|---|
| PHI | | |
| .000 | .5242 | .3779 |
| 40.000 | .3491 | .2047 |

ALPHA ( 5) = 11.877 BETA ( 2) = .185 MACH = 1.2456 Q = 599.56 P = 552.04 RN/L = 3.0223

SECTION ( 1)BODY FLAP LOWER DEPENDENT VARIABLE CP

| X/LB | 1.0180 | 1.0460 |
|---|---|---|
| PHI | | |
| .000 | .5221 | .3769 |
| 40.000 | .3496 | .2049 |

AMES 11-073(OA148). -140A/B/C/R ORB BODY FLAP LWR (XEBG63)

ALPHA ( 5) = 11.890 BETA ( 3) = 4.256 MACH = 1.2456 Q = 599.56 P = 552.04 RN/L = 3.0223

SECTION ( 1)BODY FLAP LOWER DEPENDENT VARIABLE CP

| X/LB | 1.0180 | 1.0460 |
|---|---|---|
| PHI | | |
| .000 | .5211 | .3750 |
| 40.000 | .3491 | .2149 |

ORIGINAL PAGE IS
OF POOR QUALITY

AMES 11-073(OA148) -140A/B/C/R ORB BODY FLAP LWR (XE8G64) ( 05 AUG 75 )

REFERENCE DATA

SREF = 2690.0000 SQ.FT. XMRP = 1076.6800 IN. XO
LREF = 474.8000 IN. YMRP = .0000 IN. YO
BREF = 936.0680 IN. ZMRP = 375.0000 IN. ZO
SCALE = .0300

PARAMETRIC DATA

RUDDER = 5.000 SPDBRK = 55.000
BDFLAP = 16.300 L-ELVN = -4.000
R-ELVN = -4.000 MACH = 1.100

ALPHA ( 1) = -3.951 BETA ( 1) = -3.840 MACH = 1.0981 Q = 598.93 P = 709.54 RN/L = 3.1905

SECTION ( 1)BODY FLAP LOWER DEPENDENT VARIABLE CP

| X/LB | 1.0180 | 1.0460 |
|---|---|---|
| PHI | | |
| .000 | .2373 | .1435 |
| 40.000 | .0563 | .0095 |

ALPHA ( 1) = -3.948 BETA ( 2) = .196 MACH = 1.0981 Q = 598.93 P = 709.54 RN/L = 3.1905

SECTION ( 1)BODY FLAP LOWER DEPENDENT VARIABLE CP

| X/LB | 1.0180 | 1.0460 |
|---|---|---|
| PHI | | |
| .000 | .2353 | .1568 |
| 40.000 | .0770 | .0272 |

ALPHA ( 1) = -3.942 BETA ( 3) = 4.273 MACH = 1.0981 Q = 598.93 P = 709.54 RN/L = 3.1905

SECTION ( 1)BODY FLAP LOWER DEPENDENT VARIABLE CP

| X/LB | 1.0180 | 1.0460 |
|---|---|---|
| PHI | | |
| .000 | .2224 | .1374 |
| 40.000 | .0763 | -.0014 |

ALPHA ( 2) = .059 BETA ( 1) = -3.863 MACH = 1.0998 Q = 599.80 P = 708.37 RN/L = 3.1909

SECTION ( 1)BODY FLAP LOWER DEPENDENT VARIABLE CP

| X/LB | 1.0180 | 1.0460 |
|---|---|---|
| PHI | | |
| .000 | .2680 | .1638 |
| 40.000 | .1616 | .0636 |

AMES 11-073(OA148) -140A/B/C/R ORB BODY FLAP LWR (XE8664)

ALPHA ( 2) = .062 BETA ( 2) = .183 MACH = 1.0998 Q = 599.80 P = 708.37 RN/L = 3.1909

SECTION ( 1)BODY FLAP LOWER DEPENDENT VARIABLE CP

| X/LB | 1.0180 | 1.0460 |
|---|---|---|
| PHI | | |
| .000 | .2979 | .1881 |
| 40.000 | .1411 | .0634 |

ALPHA ( 2) = .059 BETA ( 3) = 4.253 MACH = 1.0998 Q = 599.80 P = 708.37 RN/L = 3.1909

SECTION ( 1)BODY FLAP LOWER DEPENDENT VARIABLE CP

| X/LB | 1.0180 | 1.0460 |
|---|---|---|
| PHI | | |
| .000 | .2046 | .1680 |
| 40.000 | .1274 | .0226 |

ALPHA ( 3) = 4.021 BETA ( 1) = -3.865 MACH = 1.0995 Q = 600.25 P = 709.31 RN/L = 3.1949

SECTION ( 1)BODY FLAP LOWER DEPENDENT VARIABLE CP

| X/LB | 1.0180 | 1.0460 |
|---|---|---|
| PHI | | |
| .000 | .3451 | .2097 |
| 40.000 | .2206 | .1015 |

ALPHA ( 3) = 4.021 BETA ( 2) = .178 MACH = 1.0995 Q = 600.25 P = 709.31 RN/L = 3.1949

SECTION ( 1)BODY FLAP LOWER DEPENDENT VARIABLE CP

| X/LB | 1.0180 | 1.0460 |
|---|---|---|
| PHI | | |
| .000 | .3575 | .2178 |
| 40.000 | .2050 | .0852 |

ALPHA ( 3) = 4.024 BETA ( 3) = 4.243 MACH = 1.0995 Q = 600.25 P = 709.31 RN/L = 3.1949

SECTION ( 1)BODY FLAP LOWER DEPENDENT VARIABLE CP

| X/LB | 1.0180 | 1.0460 |
|---|---|---|
| PHI | | |
| .000 | .3511 | .2177 |
| 40.000 | .1789 | .0551 |

AMES 11-073(OA148) -140A/B/C/R ORB BODY FLAP LWR (XEBG64)

ALPHA ( 4) = 7.977 BETA ( 1) = -3.859 MACH = 1.0995 Q = 600.25 P = 709.31 RN/L = 3.1954

SECTION ( 1)BODY FLAP LOWER DEPENDENT VARIABLE CP

| X/LB | 1.0180 | 1.0460 |
|---|---|---|
| PHI | | |
| .000 | .4253 | .2569 |
| 40.000 | .2709 | .1255 |

ALPHA ( 4) = 7.981 BETA ( 2) = .181 MACH = 1.0995 Q = 600.25 P = 709.31 RN/L = 3.1954

SECTION ( 1)BODY FLAP LOWER DEPENDENT VARIABLE CP

| X/LB | 1.0180 | 1.0460 |
|---|---|---|
| PHI | | |
| .000 | .4335 | .2584 |
| 40.000 | .2636 | .1122 |

ALPHA ( 4) = 7.900 BETA ( 3) = 4.237 MACH = 1.0995 Q = 600.25 P = 709.31 RN/L = 3.1954

SECTION ( 1)BODY FLAP LOWER DEPENDENT VARIABLE CP

| X/LB | 1.0180 | 1.0460 |
|---|---|---|
| PHI | | |
| .000 | .4279 | .2571 |
| 40.000 | .2405 | .0922 |

ALPHA ( 5) = 11.919 BETA ( 1) = -3.844 MACH = 1.0980 Q = 599.84 P = 710.72 RN/L = 3.1951

SECTION ( 1)BODY FLAP LOWER DEPENDENT VARIABLE CP

| X/LB | 1.0180 | 1.0460 |
|---|---|---|
| PHI | | |
| .000 | .5031 | .2950 |
| 40.000 | .3189 | .1424 |

ALPHA ( 5) = 11.930 BETA ( 2) = .189 MACH = 1.0980 Q = 599.84 P = 710.72 RN/L = 3.1951

SECTION ( 1)BODY FLAP LOWER DEPENDENT VARIABLE CP

| X/LB | 1.0180 | 1.0460 |
|---|---|---|
| PHI | | |
| .000 | .5059 | .2953 |
| 40.000 | .3194 | .1342 |

AMES 11-073(OA148) -140A/B/C/R ORB BODY FLAP LWR (XEBG64)

ALPHA ( 5) = 11.925 BETA ( 3) = 4.249 MACH = 1.0980 Q = 599.84 P = 710.72 RN/L = 3.1951

SECTION ( 1)BODY FLAP LOWER DEPENDENT VARIABLE CP

| X/LB | 1.0180 | 1.0460 |
|---|---|---|
| PHI | | |
| .000 | .5037 | .2931 |
| 40.000 | .3059 | .1181 |

ORIGINAL PAGE IS OF POOR QUALITY

AMES 11-073(OA148) -140A/B/C/R ORB BODY FLAP LWR (XEBG65) ( 05 AUG 75 )

REFERENCE DATA

SREF = 2690.0000 SQ.FT. XMRP = 1076.6800 IN. XO
LREF = 474.8000 IN. YMRP = .0000 IN. YO
BREF = 935.0000 IN. ZMRP = 375.0000 IN. ZO
SCALE = .0300

PARAMETRIC DATA

RUDDER = 5.000 SPDBRK = 55.000
BDFLAP = 16.300 L-ELVN = -4.000
R-ELVN = -4.000 MACH = .900

ALPHA ( 1) = -3.965 BETA ( 1) = -3.837 MACH = .90037 Q = 600.12 P = 1057.6 RN/L = 3.5768

SECTION ( 1)BODY FLAP LOWER DEPENDENT VARIABLE CP

| X/LB | 1.0180 | 1.0460 |
|---|---|---|
| PHI | | |
| .000 | .2869 | .1024 |
| 40.000 | .1104 | .0169 |

ALPHA ( 1) = -3.963 BETA ( 2) = .195 MACH = .90037 Q = 600.12 P = 1057.6 RN/L = 3.5768

SECTION ( 1)BODY FLAP LOWER DEPENDENT VARIABLE CP

| X/LB | 1.0180 | 1.0460 |
|---|---|---|
| PHI | | |
| .000 | .3030 | .1115 |
| 40.000 | .1338 | .0190 |

ALPHA ( 1) = -3.957 BETA ( 3) = 4.274 MACH = .90037 Q = 600.12 P = 1057.6 RN/L = 3.5768

SECTION ( 1)BODY FLAP LOWER DEPENDENT VARIABLE CP

| X/LB | 1.0180 | 1.0460 |
|---|---|---|
| PHI | | |
| .000 | .2744 | .0953 |
| 40.000 | .1703 | .0075 |

ALPHA ( 2) = .052 BETA ( 1) = -3.869 MACH = .90007 Q = 599.62 P = 1057.3 RN/L = 3.5759

SECTION ( 1)BODY FLAP LOWER DEPENDENT VARIABLE CP

| X/LB | 1.0180 | 1.0460 |
|---|---|---|
| PHI | | |
| .000 | .2843 | .0967 |
| 40.000 | .1577 | .0306 |

AMES 11-073(OA148) -140A/B/C/R ORB BODY FLAP LWR (XE8G65)

ALPHA ( 2) = .054 BETA ( 2) = .179 MACH = .90007 Q = 599.62 P = 1057.3 RN/L = 3.5759

SECTION ( 1)BODY FLAP LOWER DEPENDENT VARIABLE CP

| X/LB | 1.0180 | 1.0460 |
|---|---|---|
| PHI | | |
| .000 | .3014 | .1040 |
| 40.000 | .1721 | .0205 |

ALPHA ( 2) = .050 BETA ( 3) = 4.252 MACH = .90007 Q = 599.62 P = 1057.3 RN/L = 3.5759

SECTION ( 1)BODY FLAP LOWER DEPENDENT VARIABLE CP

| X/LB | 1.0180 | 1.0460 |
|---|---|---|
| PHI | | |
| .000 | .2843 | .0967 |
| 40.000 | .1626 | -.0048 |

ALPHA ( 3) = 4.021 BETA ( 1) = -3.873 MACH = .89817 Q = 598.16 P = 1059.3 RN/L = 3.5705

SECTION ( 1)BODY FLAP LOWER DEPENDENT VARIABLE CP

| X/LB | 1.0180 | 1.0460 |
|---|---|---|
| PHI | | |
| .000 | .3368 | .1140 |
| 40.000 | .2098 | .0471 |

ALPHA ( 3) = 4.021 BETA ( 2) = .183 MACH = .89817 Q = 598.16 P = 1059.3 RN/L = 3.5705

SECTION ( 1)BODY FLAP LOWER DEPENDENT VARIABLE CP

| X/LB | 1.0180 | 1.0460 |
|---|---|---|
| PHI | | |
| .000 | .3390 | .1151 |
| 40.000 | .2143 | .0216 |

ALPHA ( 3) = 4.023 BETA ( 3) = 4.246 MACH = .89817 Q = 598.16 P = 1059.3 RN/L = 3.5705

SECTION ( 1)BODY FLAP LOWER DEPENDENT VARIABLE CP

| X/LB | 1.0180 | 1.0460 |
|---|---|---|
| PHI | | |
| .000 | .3442 | .1146 |
| 40.000 | .1928 | .0075 |

AMES 11-073(OA148) -140A/B/C/R ORB BODY FLAP LWR (XE8065)

ALPHA ( 4) = 7.876 BETA ( 1) = -3.866 MACH = .89873 Q = 598.61 P = 1058.8 RN/L = 3.5706

SECTION ( 1)BODY FLAP LOWER DEPENDENT VARIABLE CP

| X/LB | 1.0180 | 1.0460 |
|---|---|---|
| PHI | | |
| .000 | .3771 | .1311 |
| 40.000 | .2502 | .0553 |

ALPHA ( 4) = 7.884 BETA ( 2) = .183 MACH = .89873 Q = 598.61 P = 1058.8 RN/L = 3.5706

SECTION ( 1)BODY FLAP LOWER DEPENDENT VARIABLE CP

| X/LB | 1.0180 | 1.0460 |
|---|---|---|
| PHI | | |
| .000 | .3814 | .1330 |
| 40.000 | .2387 | .0358 |

ALPHA ( 4) = 7.892 BETA ( 3) = 4.244 MACH = .89873 Q = 598.61 P = 1058.8 RN/L = 3.5706

SECTION ( 1)BODY FLAP LOWER DEPENDENT VARIABLE CP

| X/LB | 1.0180 | 1.0460 |
|---|---|---|
| PHI | | |
| .000 | .3854 | .1325 |
| 40.000 | .2205 | .0141 |

ALPHA ( 5) = 11.907 BETA ( 1) = -3.854 MACH = .89780 Q = 598.05 P = 1060.0 RN/L = 3.5707

SECTION ( 1)BODY FLAP LOWER DEPENDENT VARIABLE CP

| X/LB | 1.0180 | 1.0460 |
|---|---|---|
| PHI | | |
| .000 | .4077 | .1424 |
| 40.000 | .2767 | .0540 |

ALPHA ( 5) = 11.920 BETA ( 2) = .190 MACH = .89780 Q = 598.05 P = 1060.0 RN/L = 3.5707

SECTION ( 1)BODY FLAP LOWER DEPENDENT VARIABLE CP

| X/LB | 1.0180 | 1.0460 |
|---|---|---|
| PHI | | |
| .000 | .4031 | .1403 |
| 40.000 | .2533 | .0316 |

AMES 11-073(OA148) -140A/B/C/R ORB BODY FLAP LWR (XE8G65)

ALPHA ( 5) = 11.937 BETA ( 3) = 4.258 MACH = .89780 Q = 598.05 P = 1060.0 RN/L = 3.5707

SECTION ( 1)BODY FLAP LOWER DEPENDENT VARIABLE CP

| X/LB | 1.0180 | 1.0460 |
|---|---|---|
| PHI | | |
| .000 | .4073 | .1393 |
| 40.000 | .2262 | .0050 |

AMES 11-073(OA148) -140A/B/C/R ORB BODY FLAP LWR (XE5G55) ( 05 AUG 75 )

REFERENCE DATA

SREF = 2690.0000 SQ.FT. XMRP = 1076.6800 IN. XO
LREF = 474.8000 IN. YMRP = .0000 IN. YO
BREF = 935.0583 IN. ZMRP = 375.0000 IN. ZO
SCALE = .0300

PARAMETRIC DATA

RUDDER = 5.000 SPDBRK = 55.000
BDFLAP = 16.300 L-ELVN = -4.000
R-ELVN = -4.000 MACH = .600

ALPHA ( 1) = -4.037 BETA ( 1) = -7.846 MACH = .59482 Q = 591.26 P = 2387.4 RN/L = 4.8005

SECTION ( 1)BODY FLAP LOWER DEPENDENT VARIABLE CP

| X/LB | 1.0180 | 1.0460 |
|---|---|---|
| PHI | | |
| .000 | .2131 | .0005 |
| 40.000 | .1031 | -.0415 |

ALPHA ( 1) = -3.899 BETA ( 2) = -3.843 MACH = .59482 Q = 591.26 P = 2387.4 RN/L = 4.8005

SECTION ( 1)BODY FLAP LOWER DEPENDENT VARIABLE CP

| X/LB | 1.0180 | 1.0460 |
|---|---|---|
| PHI | | |
| .000 | .2278 | .0077 |
| 40.000 | .1246 | -.0468 |

ALPHA ( 1) = -3.894 BETA ( 3) = .194 MACH = .59482 Q = 591.26 P = 2387.4 RN/L = 4.8005

SECTION ( 1)BODY FLAP LOWER DEPENDENT VARIABLE CP

| X/LB | 1.0180 | 1.0460 |
|---|---|---|
| PHI | | |
| .000 | .2475 | .0095 |
| 40.000 | .1206 | -.0492 |

ALPHA ( 1) = -3.902 BETA ( 4) = 4.271 MACH = .59482 Q = 591.26 P = 2387.4 RN/L = 4.8005

SECTION ( 1)BODY FLAP LOWER DEPENDENT VARIABLE CP

| X/LB | 1.0180 | 1.0460 |
|---|---|---|
| PHI | | |
| .000 | .2228 | .0021 |
| 40.000 | .1243 | -.0593 |

AMES 11-073(OA148) -140A/B/C/R ORB BODY FLAP LWR (XE8G66)

ALPHA ( 1) = -3.917 BETA ( 5) = 8.333 MACH = .59482 Q = 591.26 P = 2387.4 RN/L = 4.8005

SECTION ( 1)BODY FLAP LOWER DEPENDENT VARIABLE CP

| X/LB | 1.0180 | 1.0460 |
|---|---|---|
| PHI | | |
| .000 | .2167 | -.0093 |
| 40.000 | .1042 | -.0659 |

ALPHA ( 2) = .066 BETA ( 1) = -7.886 MACH = .59550 Q = 592.43 P = 2386.4 RN/L = 4.8075

SECTION ( 1)BODY FLAP LOWER DEPENDENT VARIABLE CP

| X/LB | 1.0180 | 1.0460 |
|---|---|---|
| PHI | | |
| .000 | .2495 | -.0007 |
| 40.000 | .1295 | -.0338 |

ALPHA ( 2) = .075 BETA ( 2) = -3.862 MACH = .59550 Q = 592.43 P = 2386.4 RN/L = 4.8075

SECTION ( 1)BODY FLAP LOWER DEPENDENT VARIABLE CP

| X/LB | 1.0180 | 1.0460 |
|---|---|---|
| PHI | | |
| .000 | .2355 | .0102 |
| 40.000 | .1489 | -.0366 |

ALPHA ( 2) = .076 BETA ( 3) = .175 MACH = .59550 Q = 592.43 P = 2386.4 RN/L = 4.8075

SECTION ( 1)BODY FLAP LOWER DEPENDENT VARIABLE CP

| X/LB | 1.0180 | 1.0460 |
|---|---|---|
| PHI | | |
| .000 | .2413 | .0111 |
| 40.000 | .1381 | -.0471 |

ALPHA ( 2) = .073 BETA ( 4) = 4.250 MACH = .59550 Q = 592.43 P = 2386.4 RN/L = 4.8075

SECTION ( 1)BODY FLAP LOWER DEPENDENT VARIABLE CP

| X/LB | 1.0180 | 1.0460 |
|---|---|---|
| PHI | | |
| .000 | .2380 | .0086 |
| 40.000 | .1205 | -.0557 |

AMES 11-073(OA148) -140A/B/C/R ORB BODY FLAP LWR (XE8G66)

ALPHA ( 2) = .069 BETA ( 5) = 8.308 MACH = .59550 Q = 592.43 P = 2386.4 RN/L = 4.8075

SECTION ( 1)BODY FLAP LOWER DEPENDENT VARIABLE CP

| X/LB | 1.0180 | 1.0460 |
|---|---|---|
| PHI | | |
| .000 | .2463 | -.0036 |
| 40.000 | .1127 | -.0556 |

ALPHA ( 3) = 4.021 BETA ( 1) = -7.899 MACH = .59494 Q = 591.36 P = 2386.7 RN/L = 4.8049

SECTION ( 1)BODY FLAP LOWER DEPENDENT VARIABLE CP

| X/LB | 1.0180 | 1.0460 |
|---|---|---|
| PHI | | |
| .000 | .2715 | .0104 |
| 40.000 | .1555 | -.0194 |

ALPHA ( 3) = 4.024 BETA ( 2) = -3.864 MACH = .59494 Q = 591.36 P = 2386.7 RN/L = 4.8049

SECTION ( 1)BODY FLAP LOWER DEPENDENT VARIABLE CP

| X/LB | 1.0180 | 1.0460 |
|---|---|---|
| PHI | | |
| .000 | .2622 | .0177 |
| 40.000 | .1687 | -.0323 |

ALPHA ( 3) = 4.022 BETA ( 3) = .186 MACH = .59494 Q = 591.36 P = 2386.7 RN/L = 4.8049

SECTION ( 1)BODY FLAP LOWER DEPENDENT VARIABLE CP

| X/LB | 1.0180 | 1.0460 |
|---|---|---|
| PHI | | |
| .000 | .2633 | .0156 |
| 40.000 | .1507 | -.0403 |

ALPHA ( 3) = 4.025 BETA ( 4) = 4.244 MACH = .59494 Q = 591.36 P = 2386.7 RN/L = 4.8049

SECTION ( 1)BODY FLAP LOWER DEPENDENT VARIABLE CP

| X/LB | 1.0180 | 1.0460 |
|---|---|---|
| PHI | | |
| .000 | .2641 | .0115 |
| 40.000 | .1359 | -.0518 |

AMES 11-073(OA148) -140A/B/C/R ORB BODY FLAP LWR (XE8G66)

ALPHA ( 3) = 4.031 BETA ( 5) = 8.294 MACH = .59494 Q = 591.36 P = 2386.7 RN/L = 4.8049

SECTION ( 1)BODY FLAP LOWER DEPENDENT VARIABLE CP

| X/LB | 1.0180 | 1.0460 |
|---|---|---|
| PHI | | |
| .000 | .2721 | .0026 |
| 40.000 | .1337 | -.0477 |

ALPHA ( 4) = 7.869 BETA ( 1) = -7.888 MACH = .59424 Q = 590.06 P = 2387.2 RN/L = 4.7971

SECTION ( 1)BODY FLAP LOWER DEPENDENT VARIABLE CP

| X/LB | 1.0180 | 1.0460 |
|---|---|---|
| PHI | | |
| .000 | .2892 | .0199 |
| 40.000 | .1809 | -.0148 |

ALPHA ( 4) = 7.986 BETA ( 2) = -3.859 MACH = .59424 Q = 590.06 P = 2387.2 RN/L = 4.7971

SECTION ( 1)BODY FLAP LOWER DEPENDENT VARIABLE CP

| X/LB | 1.0180 | 1.0460 |
|---|---|---|
| PHI | | |
| .000 | .2890 | .0277 |
| 40.000 | .1879 | -.0224 |

ALPHA ( 4) = 7.991 BETA ( 3) = .178 MACH = .59424 Q = 590.06 P = 2387.2 RN/L = 4.7971

SECTION ( 1)BODY FLAP LOWER DEPENDENT VARIABLE CP

| X/LB | 1.0180 | 1.0460 |
|---|---|---|
| PHI | | |
| .000 | .2934 | .0334 |
| 40.000 | .1726 | -.0248 |

ALPHA ( 4) = 7.992 BETA ( 4) = 4.237 MACH = .59424 Q = 590.06 P = 2387.2 RN/L = 4.7971

SECTION ( 1)BODY FLAP LOWER DEPENDENT VARIABLE CP

| X/LB | 1.0180 | 1.0460 |
|---|---|---|
| PHI | | |
| .000 | .2927 | .0210 |
| 40.000 | .1608 | -.0308 |

ORIGINAL PAGE IS
OF POOR QUALITY

AMES 11-073(OA148) -140A/B/C/R ORB BODY FLAP LWR (XE8066)

ALPHA ( 4) = 7.989 BETA ( 5) = 8.293 MACH = .59424 Q = 590.06 P = 2387.2 RN/L = 4.7971

SECTION ( 1)BODY FLAP LOWER DEPENDENT VARIABLE CP

| X/LB | 1.0180 | 1.0460 |
|---|---|---|
| PHI | | |
| .000 | .2932 | .0117 |
| 40.000 | .1543 | -.0370 |

ALPHA ( 5) = 12.002 BETA ( 1) = -7.846 MACH = .59422 Q = 590.06 P = 2387.2 RN/L = 4.7978

SECTION ( 1)BODY FLAP LOWER DEPENDENT VARIABLE CP

| X/LB | 1.0180 | 1.0460 |
|---|---|---|
| PHI | | |
| .000 | .3150 | .0350 |
| 40.000 | .2052 | -.0023 |

ALPHA ( 5) = 12.020 BETA ( 2) = -3.839 MACH = .59422 Q = 590.06 P = 2387.2 RN/L = 4.7978

SECTION ( 1)BODY FLAP LOWER DEPENDENT VARIABLE CP

| X/LB | 1.0180 | 1.0460 |
|---|---|---|
| PHI | | |
| .000 | .3170 | .0424 |
| 40.000 | .2038 | -.0058 |

ALPHA ( 5) = 11.983 BETA ( 3) = .186 MACH = .59422 Q = 590.06 P = 2387.2 RN/L = 4.7978

SECTION ( 1)BODY FLAP LOWER DEPENDENT VARIABLE CP

| X/LB | 1.0180 | 1.0460 |
|---|---|---|
| PHI | | |
| .000 | .3127 | .0419 |
| 40.000 | .1849 | -.0237 |

ALPHA ( 5) = 11.980 BETA ( 4) = 4.247 MACH = .59422 Q = 590.06 P = 2387.2 RN/L = 4.7978

SECTION ( 1)BODY FLAP LOWER DEPENDENT VARIABLE CP

| X/LB | 1.0180 | 1.0460 |
|---|---|---|
| PHI | | |
| .000 | .3172 | .0377 |
| 40.000 | .1756 | -.0195 |

AMES 11-073(OA148) -140A/B/C/R ORB BODY FLAP LWR (XE8G66)

ALPHA ( 5) = 11.973 BETA ( 5) = 8.307 MACH = .59422 Q = 590.06 P = 2387.2 RN/L = 4.7978

SECTION ( 1)BODY FLAP LOWER DEPENDENT VARIABLE CP

| X/LB | 1.0180 | 1.0460 |
|---|---|---|
| PHI | | |
| .000 | .3159 | .0323 |
| 40.000 | .1707 | -.0309 |

AMES 11-073(OA148) -140A/B/C/R ORB BODY FLAP LWR (XE8G67) ( 05 AUG 75 )

REFERENCE DATA

SREF = 2690.0000 SQ.FT. XMRP = 1076.6800 IN. XO
LREF = 474.0000 IN. YMRP = .0000 IN. YO
BREF = 935.0680 IN. ZMRP = 375.0000 IN. ZO
SCALE = .0300

PARAMETRIC DATA

RUDDER = .000 SPDBRK = 55.000
BDFLAP = 22.500 L-ELVN = -4.000
R-ELVN = -4.000 MACH = .900

ALPHA ( 1) = -3.954 BETA ( 1) = -3.849 MACH = .90057 Q = 600.66 P = 1058.0 RN/L = 3.6340

SECTION ( 1)BODY FLAP LOWER DEPENDENT VARIABLE CP

| X/LB | 1.0180 | 1.0460 |
|---|---|---|
| PHI | | |
| .000 | .4136 | .2295 |
| 40.000 | .1900 | .1538 |

ALPHA ( 1) = -3.952 BETA ( 2) = .192 MACH = .90057 Q = 600.66 P = 1058.0 RN/L = 3.6340

SECTION ( 1)BODY FLAP LOWER DEPENDENT VARIABLE CP

| X/LB | 1.0180 | 1.0460 |
|---|---|---|
| PHI | | |
| .000 | .4102 | .2433 |
| 40.000 | .2783 | .1348 |

ALPHA ( 1) = -3.959 BETA ( 3) = 4.272 MACH = .90057 Q = 600.66 P = 1058.0 RN/L = 3.6340

SECTION ( 1)BODY FLAP LOWER DEPENDENT VARIABLE CP

| X/LB | 1.0180 | 1.0460 |
|---|---|---|
| PHI | | |
| .000 | .3909 | .2283 |
| 40.000 | .2768 | .1687 |

ALPHA ( 2) = .049 BETA ( 1) = -3.871 MACH = .90130 Q = 601.04 P = 1056.9 RN/L = 3.6167

SECTION ( 1)BODY FLAP LOWER DEPENDENT VARIABLE CP

| X/LB | 1.0180 | 1.0460 |
|---|---|---|
| PHI | | |
| .000 | .3733 | .2200 |
| 40.000 | .3024 | .1547 |

AMES 11-073(OA148) -140A/B/C/R ORB BODY FLAP LWR (XE8G67)

ALPHA ( 2) = .052 BETA ( 2) = .177 MACH = .90130 Q = 601.04 P = 1056.9 RN/L = 3.6167

SECTION ( 1)BODY FLAP LOWER DEPENDENT VARIABLE CP

| X/LB | 1.0180 | 1.0460 |
|---|---|---|
| PHI | | |
| .000 | .4094 | .2276 |
| 40.000 | .2840 | .1273 |

ALPHA ( 2) = .052 BETA ( 3) = 4.253 MACH = .90130 Q = 601.04 P = 1056.9 RN/L = 3.6167

SECTION ( 1)BODY FLAP LOWER DEPENDENT VARIABLE CP

| X/LB | 1.0180 | 1.0460 |
|---|---|---|
| PHI | | |
| .000 | .3724 | .2197 |
| 40.000 | .2713 | .0951 |

ALPHA ( 3) = 4.019 BETA ( 1) = -3.877 MACH = .89987 Q = 599.87 P = 1058.3 RN/L = 3.6007

SECTION ( 1)BODY FLAP LOWER DEPENDENT VARIABLE CP

| X/LB | 1.0180 | 1.0460 |
|---|---|---|
| PHI | | |
| .000 | .4456 | .2398 |
| 40.000 | .3746 | .1610 |

ALPHA ( 3) = 4.018 BETA ( 2) = .181 MACH = .89987 Q = 599.87 P = 1058.3 RN/L = 3.6007

SECTION ( 1)BODY FLAP LOWER DEPENDENT VARIABLE CP

| X/LB | 1.0180 | 1.0460 |
|---|---|---|
| PHI | | |
| .000 | .4511 | .2389 |
| 40.000 | .3334 | .1292 |

ALPHA ( 3) = 4.022 BETA ( 3) = 4.243 MACH = .89987 Q = 599.87 P = 1058.3 RN/L = 3.6007

SECTION ( 1)BODY FLAP LOWER DEPENDENT VARIABLE CP

| X/LB | 1.0180 | 1.0460 |
|---|---|---|
| PHI | | |
| .000 | .4528 | .2424 |
| 40.000 | .3082 | .1047 |

AMES 11-073(OA148) -140A/B/C/R ORB BODY FLAP LWR (XE8667)

ALPHA ( 4) = 7.985 BETA ( 1) = -3.860 MACH = .90040 Q = 600.32 P = 1057.8 RN/L = 3.5837

SECTION ( 1)BODY FLAP LOWER DEPENDENT VARIABLE CP

| X/LB | 1.0180 | 1.0460 |
|---|---|---|
| PHI | | |
| .000 | .5017 | .2557 |
| 40.000 | .4126 | .1649 |

ALPHA ( 4) = 7.993 BETA ( 2) = .182 MACH = .90040 Q = 600.32 P = 1057.8 RN/L = 3.5837

SECTION ( 1)BODY FLAP LOWER DEPENDENT VARIABLE CP

| X/LB | 1.0180 | 1.0460 |
|---|---|---|
| PHI | | |
| .000 | .5044 | .2551 |
| 40.000 | .3720 | .1373 |

ALPHA ( 4) = 7.992 BETA ( 3) = 4.242 MACH = .90040 Q = 600.32 P = 1057.8 RN/L = 3.5837

SECTION ( 1)BODY FLAP LOWER DEPENDENT VARIABLE CP

| X/LB | 1.0180 | 1.0460 |
|---|---|---|
| PHI | | |
| .000 | .5055 | .2585 |
| 40.000 | .3390 | .1172 |

ALPHA ( 5) = 11.953 BETA ( 1) = -3.856 MACH = .89987 Q = 599.87 P = 1058.3 RN/L = 3.5762

SECTION ( 1)BODY FLAP LOWER DEPENDENT VARIABLE CP

| X/LB | 1.0180 | 1.0460 |
|---|---|---|
| PHI | | |
| .000 | .5490 | .2659 |
| 40.000 | .4254 | .1586 |

ALPHA ( 5) = 11.963 BETA ( 2) = .189 MACH = .89987 Q = 599.87 P = 1058.3 RN/L = 3.5762

SECTION ( 1)BODY FLAP LOWER DEPENDENT VARIABLE CP

| X/LB | 1.0180 | 1.0460 |
|---|---|---|
| PHI | | |
| .000 | .5470 | .2705 |
| 40.000 | .3914 | .1395 |

AMES 11-073(OA148) -140A/B/C/R ORB BODY FLAP LWR (XEBG67)

ALPHA ( 5) = 11.953 BETA ( 3) = 4.261 MACH = .89987 Q = 599.87 P = 1058.3 RN/L = 3.5762

SECTION ( 1)BODY FLAP LOWER DEPENDENT VARIABLE CP

| X/LB | 1.0180 | 1.0460 |
|---|---|---|
| PHI | | |
| .000 | .5487 | .2699 |
| 40.000 | .3699 | .1174 |

AMES 11-073(OA148) -140A/B/C/R ORB BODY FLAP LWR (XE2G6B) ( 08 AUG 75 )

REFERENCE DATA

SREF = 2690.0000 SQ.FT. XMRP = 1076.6800 IN. XO
LREF = 474.8000 IN. YMRP = .0000 IN. YO
BREF = 936.0680 IN. ZMRP = 375.0000 IN. ZO
SCALE = .0300

PARAMETRIC DATA

RUDDER = .000 SPCBRK = 55.000
BDFLAP = 22.500 L-ELVN = -4.000
R-ELVN = -4.000 MACH = .600

ALPHA ( 1) = -3.934 BETA ( 1) = -7.845 MACH = .59574 Q = 593.04 P = 2387.2 RN/L = 4.8347

SECTION ( 1)BODY FLAP LOWER DEPENDENT VARIABLE CP

| X/LB | 1.0180 | 1.0460 |
|---|---|---|
| PHI | | |
| .000 | .3220 | .0777 |
| 40.000 | .2314 | .0409 |

ALPHA ( 1) = -3.918 BETA ( 2) = -3.844 MACH = .59574 Q = 593.04 P = 2387.2 RN/L = 4.8347

SECTION ( 1)BODY FLAP LOWER DEPENDENT VARIABLE CP

| X/LB | 1.0180 | 1.0460 |
|---|---|---|
| PHI | | |
| .000 | .3546 | .0973 |
| 40.000 | .2489 | .0344 |

ALPHA ( 1) = -3.895 BETA ( 3) = .193 MACH = .59574 Q = 593.04 P = 2387.2 RN/L = 4.8347

SECTION ( 1)BODY FLAP LOWER DEPENDENT VARIABLE CP

| X/LB | 1.0180 | 1.0460 |
|---|---|---|
| PHI | | |
| .000 | .3686 | .1004 |
| 40.000 | .2371 | .0292 |

ALPHA ( 1) = -3.903 BETA ( 4) = 4.270 MACH = .59574 Q = 593.04 P = 2387.2 RN/L = 4.8347

SECTION ( 1)BODY FLAP LOWER DEPENDENT VARIABLE CP

| X/LB | 1.0180 | 1.0460 |
|---|---|---|
| PHI | | |
| .000 | .3438 | .0898 |
| 40.000 | .2342 | .0136 |

AMES 11-073(OA148) -140A/B/C/R ORB BODY FLAP LWR (XE8G6B)

ALPHA ( 1) = -3.916 BETA ( 5) = 8.339 MACH = .59574 Q = 593.04 P = 2387.2 RN/L = 4.8347

SECTION ( 1)BODY FLAP LOWER DEPENDENT VARIABLE CP

| X/LB | 1.0180 | 1.0460 |
|---|---|---|
| PHI | | |
| .000 | .3291 | .0786 |
| 40.000 | .2110 | -.0021 |

ALPHA ( 2) = .067 BETA ( 1) = -7.888 MACH = .59556 Q = 592.68 P = 2387.2 RN/L = 4.8372

SECTION ( 1)BODY FLAP LOWER DEPENDENT VARIABLE CP

| X/LB | 1.0180 | 1.0460 |
|---|---|---|
| PHI | | |
| .000 | .3811 | .0946 |
| 40.000 | .2694 | .0560 |

ALPHA ( 2) = .076 BETA ( 2) = -3.860 MACH = .59556 Q = 592.68 P = 2387.2 RN/L = 4.8372

SECTION ( 1)BODY FLAP LOWER DEPENDENT VARIABLE CP

| X/LB | 1.0180 | 1.0460 |
|---|---|---|
| PHI | | |
| .000 | .3565 | .0977 |
| 40.000 | .2851 | .0428 |

ALPHA ( 2) = .078 BETA ( 3) = .177 MACH = .59556 Q = 592.68 P = 2387.2 RN/L = 4.8372

SECTION ( 1)BODY FLAP LOWER DEPENDENT VARIABLE CP

| X/LB | 1.0180 | 1.0460 |
|---|---|---|
| PHI | | |
| .000 | .3543 | .0978 |
| 40.000 | .2493 | .0279 |

ALPHA ( 2) = .074 BETA ( 4) = 4.252 MACH = .59556 Q = 592.68 P = 2387.2 RN/L = 4.8372

SECTION ( 1)BODY FLAP LOWER DEPENDENT VARIABLE CF

| X/LB | 1.0180 | 1.0460 |
|---|---|---|
| PHI | | |
| .000 | .3570 | .0959 |
| 40.000 | .2318 | .0133 |

ORIGINAL PAGE IS OF POOR QUALITY

AMES 11-073(OA148) -14OA/B/C/R ORB BODY FLAP LWR (XE8G5B)

ALPHA ( 2) = .068 BETA ( 5) = 8.307 MACH = .59556 Q = 592.68 P = 2397.2 RN/L = 4.8372

SECTION ( 1)BODY FLAP LOWER DEPENDENT VARIABLE CP

| X/LB | 1.0180 | 1.0460 |
|---|---|---|
| PHI | | |
| .000 | .3760 | .0860 |
| 40.000 | .2129 | .0043 |

ALPHA ( 3) = 4.022 BETA ( 1) = -7.901 MACH = .59644 Q = 594.20 P = 2386.1 RN/L = 4.8446

SECTION ( 1)BODY FLAP LOWER DEPENDENT VARIABLE CP

| X/LB | 1.0180 | 1.0460 |
|---|---|---|
| PHI | | |
| .000 | .4074 | .0993 |
| 40.000 | .2996 | .0618 |

ALPHA ( 3) = 4.025 BETA ( 2) = -3.862 MACH = .59644 Q = 594.20 P = 2386.1 RN/L = 4.8446

SECTION ( 1)BODY FLAP LOWER DEPENDENT VARIABLE CP

| X/LB | 1.0180 | 1.0460 |
|---|---|---|
| PHI | | |
| .000 | .3976 | .1047 |
| 40.000 | .3045 | .0403 |

ALPHA ( 3) = 4.023 BETA ( 3) = .182 MACH = .59644 Q = 594.20 P = 2386.1 RN/L = 4.8446

SECTION ( 1)BODY FLAP LOWER DEPENDENT VARIABLE CP

| X/LB | 1.0180 | 1.0460 |
|---|---|---|
| PHI | | |
| .000 | .3874 | .1040 |
| 40.000 | .2700 | .0310 |

ALPHA ( 3) = 4.027 BETA ( 4) = 4.243 MACH = .59644 Q = 594.20 P = 2386.1 RN/L = 4.8446

SECTION ( 1)BODY FLAP LOWER DEPENDENT VARIABLE CP

| X/LB | 1.0180 | 1.0460 |
|---|---|---|
| PHI | | |
| .000 | .3936 | .1025 |
| 40.000 | .2509 | .0203 |

AMES 11-073(OA148) -140A/B/C/R ORB BODY FLAP LWR (XEBG6B)

ALPHA ( 3) = 4.033 BETA ( 5) = 8.290 MACH = .59644 Q = 594.20 P = 2386.1 RN/L = 4.8445

SECTION ( 1)BODY FLAP LOWER DEPENDENT VARIABLE CP

| X/LB | 1.0180 | 1.0460 |
|---|---|---|
| PHI | | |
| .000 | .4048 | .0909 |
| 40.000 | .2434 | .0152 |

ALPHA ( 4) = 7.992 BETA ( 1) = -7.890 MACH = .59642 Q = 594.33 P = 2386.8 RN/L = 4.8439

SECTION ( 1)BODY FLAP LOWER DEPENDENT VARIABLE CP

| X/LB | 1.0180 | 1.0460 |
|---|---|---|
| PHI | | |
| .000 | .4319 | .1055 |
| 40.000 | .3278 | .0577 |

ALPHA ( 4) = 7.993 BETA ( 2) = -3.850 MACH = .59642 Q = 594.33 P = 2386.8 RN/L = 4.8439

SECTION ( 1)BODY FLAP LOWER DEPENDENT VARIABLE CP

| X/LB | 1.0180 | 1.0460 |
|---|---|---|
| PHI | | |
| .000 | .4225 | .1152 |
| 40.000 | .3191 | .0457 |

ALPHA ( 4) = 7.991 BETA ( 3) = .185 MACH = .59642 Q = 594.33 P = 2386.8 RN/L = 4.8439

SECTION ( 1)BODY FLAP LOWER DEPENDENT VARIABLE CP

| X/LB | 1.0180 | 1.0460 |
|---|---|---|
| PHI | | |
| .000 | .4196 | .1192 |
| 40.000 | .2937 | .0415 |

ALPHA ( 4) = 7.992 BETA ( 4) = 4.234 MACH = .59642 Q = 594.33 P = 2386.8 RN/L = 4.8439

SECTION ( 1)BODY FLAP LOWER DEPENDENT VARIABLE CP

| X/LB | 1.0180 | 1.0460 |
|---|---|---|
| PHI | | |
| .000 | .4219 | .1119 |
| 40.000 | .2755 | .0332 |

AMES 11-073(OA148) -140A/B/C/R ORB BODY FLAP LWR (NEBCSB)

ALPHA ( 4) = 7.990 BETA ( 5) = 8.288 MACH = .59642 Q = 594.33 P = 2385.8 RN/L = 4.8438

SECTION ( 1)BODY FLAP LOWER DEPENDENT VARIABLE CP

| X/LB | 1.0180 | 1.0460 |
|---|---|---|
| PHI | | |
| .000 | .4285 | .1001 |
| 40.000 | .2633 | .0197 |

ALPHA ( 5) = 11.959 BETA ( 1) = -7.852 MACH = .59656 Q = 594.57 P = 2386.7 RN/L = 4.8403

SECTION ( 1)BODY FLAP LOWER DEPENDENT VARIABLE CP

| X/LB | 1.0180 | 1.0460 |
|---|---|---|
| PHI | | |
| .000 | .4531 | .1210 |
| 40.000 | .3475 | .0729 |

ALPHA ( 5) = 11.978 BETA ( 2) = -3.840 MACH = .59656 Q = 594.57 P = 2386.7 RN/L = 4.8403

SECTION ( 1)BODY FLAP LOWER DEPENDENT VARIABLE CP

| X/LB | 1.0180 | 1.0460 |
|---|---|---|
| PHI | | |
| .000 | .4477 | .1311 |
| 40.000 | .3291 | .0584 |

ALPHA ( 5) = 11.981 BETA ( 3) = .186 MACH = .59656 Q = 594.57 P = 2386.7 RN/L = 4.8403

SECTION ( 1)BODY FLAP LOWER DEPENDENT VARIABLE CP

| X/LB | 1.0180 | 1.0460 |
|---|---|---|
| PHI | | |
| .000 | .4527 | .1356 |
| 40.000 | .3121 | .0544 |

ALPHA ( 5) = 11.977 BETA ( 4) = 4.246 MACH = .59656 Q = 594.57 P = 2386.7 RN/L = 4.8403

SECTION ( 1)BODY FLAP LOWER DEPENDENT VARIABLE CP

| X/LB | 1.0180 | 1.0460 |
|---|---|---|
| PHI | | |
| .000 | .4562 | .1233 |
| 40.000 | .3018 | .0438 |

AMES 11-073(OA148) -140A/B/C/R ORB BODY FLAP LWR (XE8G68)

ALPHA ( 5) = 11.969 BETA ( 5) = 8.308 MACH = .59656 Q = 594.57 P = 2386.7 RN/L = 4.8403

SECTION ( 1)BODY FLAP LOWER DEPENDENT VARIABLE CP

| X/LB | 1.0180 | 1.0460 |
|---|---|---|
| PHI | | |
| .000 | .4528 | .1289 |
| 40.000 | .2799 | .0307 |

ORIGINAL PAGE IS
OF POOR QUALITY

AMES 11-073(OA148) -140A/B/C ORB BODY FLAP LWR (XE8669) ( 05 AUG 75 )

REFERENCE DATA

SREF = 2690.0000 SQ.FT. XMRP = 1076.6800 IN. XO
LREF = 474.8000 IN. YMRP = .0000 IN. YO
BREF = 936.0680 IN. ZMRP = 375.0000 IN. ZO
SCALE = .0300

PARAMETRIC DATA

RUDDER = .000 SPDBRK = 55.000
BDFLAP = 22.500 L-ELVN = -10.000
R-ELVN = -10.000 MACH = .900

ALPHA ( 1) = -3.989 BETA ( 1) = -3.851 MACH = .89987 Q = 599.88 P = 1058.3 RN/L = 3.6263

SECTION ( 1)BODY FLAP LOWER DEPENDENT VARIABLE CP

| X/LB | 1.0180 | 1.0460 |
|---|---|---|
| PHI | | |
| .000 | .4019 | .2342 |
| 40.000 | .1346 | .1624 |

ALPHA ( 1) = -3.997 BETA ( 2) = .189 MACH = .89987 Q = 599.88 P = 1058.3 RN/L = 3.6263

SECTION ( 1)BODY FLAP LOWER DEPENDENT VARIABLE CP

| X/LB | 1.0180 | 1.0460 |
|---|---|---|
| PHI | | |
| .000 | .3931 | .2435 |
| 40.000 | .2610 | .1356 |

ALPHA ( 1) = -3.981 BETA ( 3) = 4.272 MACH = .89987 Q = 599.88 P = 1058.3 RN/L = 3.6263

SECTION ( 1)BODY FLAP LOWER DEPENDENT VARIABLE CP

| X/LB | 1.0180 | 1.0460 |
|---|---|---|
| PHI | | |
| .000 | .3889 | .2263 |
| 40.000 | .2526 | .1187 |

ALPHA ( 2) = .008 BETA ( 1) = -3.868 MACH = .90190 Q = 601.65 P = 1056.6 RN/L = 3.6047

SECTION ( 1)BODY FLAP LOWER DEPENDENT VARIABLE CP

| X/LB | 1.0180 | 1.0460 |
|---|---|---|
| PHI | | |
| .000 | .3558 | .2228 |
| 40.000 | .2531 | .1773 |

AMES 11-073(OA148) -140A/B/C ORB BODY FLAP LWR (XE8069)

ALPHA ( 2) = .010 BETA ( 2) = .177 MACH = .90190 Q = 601.65 P = 1056.6 RN/L = 3.6047

SECTION ( 1)BODY FLAP LOWER DEPENDENT VARIABLE CP

| X/LB | 1.0180 | 1.0460 |
|---|---|---|
| PHI | | |
| .000 | .3882 | .2284 |
| 40.000 | .2566 | .1361 |

ALPHA ( 2) = .007 BETA ( 3) = 4.253 MACH = .90190 Q = 601.65 P = 1056.6 RN/L = 3.6047

SECTION ( 1)BODY FLAP LOWER DEPENDENT VARIABLE CP

| X/LB | 1.0180 | 1.0460 |
|---|---|---|
| PHI | | |
| .000 | .3416 | .2219 |
| 40.000 | .2451 | .1064 |

ALPHA ( 3) = 4.005 BETA ( 1) = -3.869 MACH = .90083 Q = 600.78 P = 1057.6 RN/L = 3.5915

SECTION ( 1)BODY FLAP LOWER DEPENDENT VARIABLE CP

| X/LB | 1.0180 | 1.0460 |
|---|---|---|
| PHI | | |
| .000 | .4301 | .2422 |
| 40.000 | .3535 | .1705 |

ALPHA ( 3) = 4.002 BETA ( 2) = .179 MACH = .90083 Q = 600.78 P = 1057.6 RN/L = 3.5915

SECTION ( 1)BODY FLAP LOWER DEPENDENT VARIABLE CP

| X/LB | 1.0180 | 1.0460 |
|---|---|---|
| PHI | | |
| .000 | .4380 | .2411 |
| 40.000 | .3151 | .1378 |

ALPHA ( 3) = 4.006 BETA ( 3) = 4.240 MACH = .90083 Q = 600.78 P = 1057.6 RN/L = 3.5915

SECTION ( 1)BODY FLAP LOWER DEPENDENT VARIABLE CP

| X/LB | 1.0180 | 1.0460 |
|---|---|---|
| PHI | | |
| .000 | .4374 | .2446 |
| 40.000 | .2883 | .1097 |

AMES 11-073(OA148) -140A/B/C ORB BODY FLAP LWR (XE8G69)

ALPHA ( 4) = 7.976 BETA ( 1) = -3.869 MACH = .89993 Q = 600.24 P = 1058.8 RN/L = 3.5857

SECTION ( 1)BODY FLAP LOWER DEPENDENT VARIABLE CP

| X/LB | 1.0180 | 1.0460 |
|---|---|---|
| PHI | | |
| .000 | .4991 | .2594 |
| 40.000 | .3983 | .1704 |

ALPHA ( 4) = 7.978 BETA ( 2) = .182 MACH = .89993 Q = 600.24 P = 1058.8 RN/L = 3.5857

SECTION ( 1)BODY FLAP LOWER DEPENDENT VARIABLE CP

| X/LB | 1.0180 | 1.0460 |
|---|---|---|
| PHI | | |
| .000 | .4966 | .2577 |
| 40.000 | .3600 | .1419 |

ALPHA ( 4) = 7.979 BETA ( 3) = 4.241 MACH = .89993 Q = 600.24 P = 1058.8 RN/L = 3.5857

SECTION ( 1)BODY FLAP LOWER DEPENDENT VARIABLE CP

| X/LB | 1.0180 | 1.0460 |
|---|---|---|
| PHI | | |
| .000 | .5034 | .2584 |
| 40.000 | .3273 | .1192 |

ALPHA ( 5) = 11.950 BETA ( 1) = -3.853 MACH = .90010 Q = 600.36 P = 1058.5 RN/L = 3.5793

SECTION ( 1)BODY FLAP LOWER DEPENDENT VARIABLE CP

| X/LB | 1.0180 | 1.0460 |
|---|---|---|
| PHI | | |
| .000 | .5439 | .2684 |
| 40.000 | .4259 | .1689 |

ALPHA ( 5) = 11.955 BETA ( 2) = .189 MACH = .90010 Q = 600.36 P = 1058.5 RN/L = 3.5793

SECTION ( 1)BODY FLAP LOWER DEPENDENT VARIABLE CP

| X/LB | 1.0180 | 1.0460 |
|---|---|---|
| PHI | | |
| .000 | .5372 | .2722 |
| 40.000 | .3822 | .1475 |

AMES 11-073(OA148) -140A/B/C ORB BODY FLAP LWR (XE8G69)

ALPHA ( 5) = 11.948 BETA ( 3) = 4.260 MACH = .90010 Q = 600.36 P = 1058.5 RN/L = 3.5793

SECTION ( 1)BODY FLAP LOWER DEPENDENT VARIABLE CP

| X/LB | 1.0180 | 1.0460 |
|---|---|---|
| PHI | | |
| .000 | .5404 | .2726 |
| 40.000 | .3531 | .1225 |

AMES 11-073(OA148) -140A/B/C ORB BODY FLAP LWR (XE8G70) ( 05 AUG 75 )

REFERENCE DATA

SREF = 2690.0000 SQ.FT. XMRP = 1076.6800 IN. XO
LREF = 474.8000 IN. YMRP = .0000 IN. YO
BREF = 936.0680 IN. ZMRP = 375.0000 IN. ZO
SCALE = .0300

PARAMETRIC DATA

RUDDER = .000 SPDBRK = 55.000
BDFLAP = 22.500 L-ELVN = -10.000
R-ELVN = -10.000 MACH = .600

ALPHA ( 1) = -3.949 BETA ( 1) = -7.852 MACH = .59666 Q = 594.81 P = 2387.0 RN/L = 4.8517

SECTION ( 1)BODY FLAP LOWER DEPENDENT VARIABLE CP

| X/LB | 1.0180 | 1.0460 |
|---|---|---|
| PHI | | |
| .000 | .3196 | .0810 |
| 40.000 | .2471 | .0545 |

ALPHA ( 1) = -3.933 BETA ( 2) = -3.843 MACH = .59666 Q = 594.81 P = 2387.0 RN/L = 4.8517

SECTION ( 1)BODY FLAP LOWER DEPENDENT VARIABLE CP

| X/LB | 1.0180 | 1.0460 |
|---|---|---|
| PHI | | |
| .000 | .3521 | .0929 |
| 40.000 | .2553 | .0371 |

ALPHA ( 1) = -3.929 BETA ( 3) = .189 MACH = .59666 Q = 594.81 P = 2387.0 RN/L = 4.8517

SECTION ( 1)BODY FLAP LOWER DEPENDENT VARIABLE CP

| X/LB | 1.0180 | 1.0460 |
|---|---|---|
| PHI | | |
| .000 | .3675 | .0921 |
| 40.000 | .2390 | .0244 |

ALPHA ( 1) = -3.935 BETA ( 4) = 4.269 MACH = .59666 Q = 594.81 P = 2387.0 RN/L = 4.8517

SECTION ( 1)BODY FLAP LOWER DEPENDENT VARIABLE CP

| X/LB | 1.0180 | 1.0460 |
|---|---|---|
| PHI | | |
| .000 | .3411 | .0857 |
| 40.000 | [illegible] | .0053 |

AMES 11-073(OA148) -140A/B/C ORB BODY FLAP LWR (XE8G70)

ALPHA ( 1) = -3.949 BETA ( 5) = 8.334 MACH = .59666 Q = 594.81 P = 2387.0 RN/L = 4.8517

SECTION ( 1)BODY FLAP LOWER DEPENDENT VARIABLE CP

| X/LB | 1.0180 | 1.0460 |
|---|---|---|
| PHI | | |
| .000 | .3199 | .0720 |
| 40.000 | .2087 | -.0016 |

ALPHA ( 2) = .049 BETA ( 1) = -7.888 MACH = .59628 Q = 593.97 P = 2386.4 RN/L = 4.8452

SECTION ( 1)BODY FLAP LOWER DEPENDENT VARIABLE CP

| X/LB | 1.0180 | 1.0460 |
|---|---|---|
| PHI | | |
| .000 | .3746 | .0901 |
| 40.000 | .2747 | .0664 |

ALPHA ( 2) = .056 BETA ( 2) = -3.864 MACH = .59628 Q = 593.97 P = 2386.4 RN/L = 4.8452

SECTION ( 1)BODY FLAP LOWER DEPENDENT VARIABLE CP

| X/LB | 1.0180 | 1.0460 |
|---|---|---|
| PHI | | |
| .000 | .3530 | .0915 |
| 40.000 | .2986 | .0407 |

ALPHA ( 2) = .058 BETA ( 3) = .180 MACH = .59628 Q = 593.97 P = 2386.4 RN/L = 4.8452

SECTION ( 1)BODY FLAP LOWER DEPENDENT VARIABLE CP

| X/LB | 1.0180 | 1.0460 |
|---|---|---|
| PHI | | |
| .000 | .3635 | .0916 |
| 40.000 | .2511 | .0231 |

ALPHA ( 2) = .059 BETA ( 4) = 4.251 MACH = .59628 Q = 593.97 P = 2386.4 RN/L = 4.8452

SECTION ( 1)BODY FLAP LOWER DEPENDENT VARIABLE CP

| X/LB | 1.0180 | 1.0460 |
|---|---|---|
| PHI | | |
| .000 | .3564 | .0926 |
| 40.000 | .2326 | .0111 |

AMES 11-073(OA148) -140A/B/C ORB BODY FLAP LWR (XE8G70)

ALPHA ( 2) = .051 BETA ( 5) = 8.306 MACH = .59628 Q = 593.97 P = 2386.4 RN/L = 4.8452

SECTION ( 1)BODY FLAP LOWER DEPENDENT VARIABLE CP

| X/LB | 1.0180 | 1.0460 |
|---|---|---|
| PHI | | |
| .000 | .3736 | .0817 |
| 40.000 | .2092 | .0003 |

ALPHA ( 3) = 4.000 BETA ( 1) = -7.898 MACH = .59578 Q = 593.03 P = 2386.8 RN/L = 4.8456

SECTION ( 1)BODY FLAP LOWER DEPENDENT VARIABLE CP

| X/LB | 1.0180 | 1.0460 |
|---|---|---|
| PHI | | |
| .000 | .4089 | .0975 |
| 40.000 | .3121 | .0654 |

ALPHA ( 3) = 4.002 BETA ( 2) = -3.861 MACH = .59578 Q = 593.03 P = 2386.8 RN/L = 4.8456

SECTION ( 1)BODY FLAP LOWER DEPENDENT VARIABLE CP

| X/LB | 1.0180 | 1.0460 |
|---|---|---|
| PHI | | |
| .000 | .3850 | .1022 |
| 40.000 | .3120 | .0439 |

ALPHA ( 3) = 4.003 BETA ( 3) = .182 MACH = .59578 Q = 593.03 P = 2386.8 RN/L = 4.8456

SECTION ( 1)BODY FLAP LOWER DEPENDENT VARIABLE CP

| X/LB | 1.0180 | 1.0460 |
|---|---|---|
| PHI | | |
| .000 | .3844 | .1003 |
| 40.000 | .2597 | .0278 |

ALPHA ( 3) = 4.003 BETA ( 4) = 4.239 MACH = .59578 Q = 593.03 P = 2386.8 RN/L = 4.8456

SECTION ( 1)BODY FLAP LOWER DEPENDENT VARIABLE CP

| X/LB | 1.0180 | 1.0460 |
|---|---|---|
| PHI | | |
| .000 | .3948 | .0978 |
| 40.000 | .2513 | .0193 |

AMES 11-073(OA148) -140A/B/C ORB BODY FLAP LWR (XE8G70)

ALPHA ( 3) = 4.009 BETA ( 5) = 8.292 MACH = .59578 Q = 593.03 P = 2386.8 RN/L = 4.8456

SECTION ( 1)BODY FLAP LOWER DEPENDENT VARIABLE CP

| X/LB | 1.0180 | 1.0460 |
|---|---|---|
| PHI | | |
| .000 | .3987 | .0913 |
| 40.000 | .2372 | .0065 |

ALPHA ( 4) = 7.945 BETA ( 1) = -7.890 MACH = .59630 Q = 593.97 P = 2386.4 RN/L = 4.8482

SECTION ( 1)BODY FLAP LOWER DEPENDENT VARIABLE CP

| X/LB | 1.0180 | 1.0460 |
|---|---|---|
| PHI | | |
| .000 | .4291 | .1056 |
| 40.000 | .3393 | .0626 |

ALPHA ( 4) = 7.956 BETA ( 2) = -3.860 MACH = .59630 Q = 593.97 P = 2386.4 RN/L = 4.8482

SECTION ( 1)BODY FLAP LOWER DEPENDENT VARIABLE CP

| X/LB | 1.0180 | 1.0460 |
|---|---|---|
| PHI | | |
| .000 | .4224 | .1138 |
| 40.000 | .3181 | .0476 |

ALPHA ( 4) = 7.955 BETA ( 3) = .181 MACH = .59630 Q = 593.97 P = 2386.4 RN/L = 4.8482

SECTION ( 1)BODY FLAP LOWER DEPENDENT VARIABLE CP

| X/LB | 1.0180 | 1.0460 |
|---|---|---|
| PHI | | |
| .000 | .4193 | .1094 |
| 40.000 | .2904 | .0376 |

ALPHA ( 4) = 7.955 BETA ( 4) = 4.234 MACH = .59630 Q = 593.97 P = 2386.4 RN/L = 4.8482

SECTION ( 1)BODY FLAP LOWER DEPENDENT VARIABLE CP

| X/LB | 1.0180 | 1.0460 |
|---|---|---|
| PHI | | |
| .000 | .4195 | .1058 |
| 40.000 | .2742 | .0296 |

AMES 11-073(OA148) -140A/B/C ORB BODY FLAP LWR (XE8G70)

ALPHA ( 4) = 7.954 BETA ( 3) = 8.280 MACH = .59630 Q = 593.97 P = 2386.4 RN/L = 4.8482

SECTION ( 1)BODY FLAP LOWER DEPENDENT VARIABLE CP

| X/LB | 1.0180 | 1.0460 |
|---|---|---|
| PHI | | |
| .000 | .4264 | .0973 |
| 40.000 | .2603 | .0205 |

ALPHA ( 5) = 11.925 BETA ( 1) = -7.848 MACH = .59584 Q = 593.15 P = 2386.7 RN/L = 4.8434

SECTION ( 1)BODY FLAP LOWER DEPENDENT VARIABLE CP

| X/LB | 1.0180 | 1.0460 |
|---|---|---|
| PHI | | |
| .000 | .4560 | .1240 |
| 40.000 | .3568 | .0736 |

ALPHA ( 5) = 11.942 BETA ( 2) = -3.851 MACH = .59584 Q = 593.15 P = 2386.7 RN/L = 4.8434

SECTION ( 1)BODY FLAP LOWER DEPENDENT VARIABLE CP

| X/LB | 1.0180 | 1.0460 |
|---|---|---|
| PHI | | |
| .000 | .4495 | .1264 |
| 40.000 | .3317 | .0576 |

ALPHA ( 5) = 11.947 BETA ( 3) = .182 MACH = .59584 Q = 593.15 P = 2386.7 RN/L = 4.8434

SECTION ( 1)BODY FLAP LOWER DEPENDENT VARIABLE CP

| X/LB | 1.0180 | 1.0460 |
|---|---|---|
| PHI | | |
| .000 | .4468 | .1246 |
| 40.000 | .3119 | .0463 |

ALPHA ( 5) = 11.942 BETA ( 4) = 4.245 MACH = .59584 Q = 593.15 P = 2386.7 RN/L = 4.8434

SECTION ( 1)BODY FLAP LOWER DEPENDENT VARIABLE CP

| X/LB | 1.0180 | 1.0460 |
|---|---|---|
| PHI | | |
| .000 | .4502 | .1284 |
| 40.000 | .2963 | .0405 |

AMES 11-073(OA148) -140A/B/C ORB BODY FLAP LWR (XE8G70)

ALPHA ( 5) = 11.935 BETA ( 5) = 8.309 MACH = .59584 Q = 593.15 P = 2386.7 RN/L = 4.8434

SECTION ( 1)BODY FLAP LOWER DEPENDENT VARIABLE CP

| X/LB | 1.0180 | 1.0460 |
|---|---|---|
| PHI | | |
| .000 | .4509 | .1152 |
| 40.000 | .2731 | .0215 |

ORIGINAL PAGE IS
OF POOR QUALITY

AMES 11-073(OA148) -140A/B/C ORB BODY FLAP LWR (XESG71) ( 05 AUG 75 )

REFERENCE DATA

SREF = 2697.0000 SQ.FT. XMRP = 1076.6800 IN. XO
LREF = 474.9000 IN. YMRP = .0000 IN. YO
BREF = 936.0690 IN. ZMRP = 375.0000 IN. ZO
SCALE = .0300

PARAMETRIC DATA

RUDDER = -5.000 SPDBRK = 55.000
BDFLAP = 16.300 L-ELVN = -10.000
R-ELVN = -10.000 MACH = 1.400

ALPHA ( 1) = -3.946 BETA ( 1) = -3.857 MACH = 1.3971 Q = 600.47 P = 439.47 RN/L = 2.9096

SECTION ( 1)BODY FLAP LOWER DEPENDENT VARIABLE CP

| X/LB | 1.0180 | 1.0460 |
|---|---|---|
| PHI | | |
| .000 | .1728 | .1479 |
| 40.000 | .0217 | -.0094 |

ALPHA ( 1) = -3.940 BETA ( 2) = .190 MACH = 1.3971 Q = 600.47 P = 439.47 RN/L = 2.9096

SECTION ( 1)BODY FLAP LOWER DEPENDENT VARIABLE CP

| X/LB | 1.0180 | 1.0460 |
|---|---|---|
| PHI | | |
| .000 | .1576 | .1319 |
| 40.000 | .0603 | .0261 |

ALPHA ( 1) = -3.946 BETA ( 3) = 4.272 MACH = 1.3971 Q = 600.47 P = 439.47 RN/L = 2.9096

SECTION ( 1)BODY FLAP LOWER DEPENDENT VARIABLE CP

| X/LB | 1.0180 | 1.0460 |
|---|---|---|
| PHI | | |
| .000 | .1682 | .1349 |
| 40.000 | .0419 | .0316 |

ALPHA ( 2) = .016 BETA ( 1) = -3.873 MACH = 1.3971 Q = 600.47 P = 439.47 RN/L = 2.9098

SECTION ( 1)BODY FLAP LOWER DEPENDENT VARIABLE CP

| X/LB | 1.0180 | 1.0460 |
|---|---|---|
| PHI | | |
| .000 | .2265 | .1909 |
| 40.000 | .1134 | .0745 |

AMES 11-073(OA148) -140A/B/C ORB BODY FLAP LWR (XES371)

ALPHA ( 2) = .022 BETA ( 2) = .180 MACH = 1.3971 Q = 600.47 P = 439.47 RN/L = 2.9088

SECTION ( 1)BODY FLAP LOWER DEPENDENT VARIABLE CP

| X/LB | 1.0180 | 1.0460 |
|---|---|---|
| PHI | | |
| .000 | .2267 | .1900 |
| 40.000 | .1010 | .0655 |

ALPHA ( 2) = .018 BETA ( 3) = 4.248 MACH = 1.3971 Q = 600.47 P = 439.47 RN/L = 2.9088

SECTION ( 1)BODY FLAP LOWER DEPENDENT VARIABLE CP

| X/LB | 1.0180 | 1.0460 |
|---|---|---|
| PHI | | |
| .000 | .2259 | .1892 |
| 40.000 | .1085 | .0728 |

ALPHA ( 3) = 3.951 BETA ( 1) = -3.877 MACH = 1.3961 Q = 600.55 P = 440.18 RN/L = 2.9092

SECTION ( 1)BODY FLAP LOWER DEPENDENT VARIABLE CP

| X/LB | 1.0190 | 1.0460 |
|---|---|---|
| PHI | | |
| .000 | .3148 | .2558 |
| 40.000 | .1953 | .1319 |

ALPHA ( 3) = 3.952 BETA ( 2) = .179 MACH = 1.3961 Q = 600.56 P = 440.18 RN/L = 2.9092

SECTION ( 1)BODY FLAP LOWER DEPENDENT VARIABLE CP

| X/LB | 1.0190 | 1.0460 |
|---|---|---|
| PHI | | |
| .000 | .3123 | .2673 |
| 40.000 | .1859 | .1307 |

ALPHA ( 3) = 3.955 BETA ( 3) = 4.242 MACH = 1.3961 Q = 600.56 P = 440.18 RN/L = 2.9092

SECTION ( 1)BODY FLAP LOWER DEPENDENT VARIABLE CP

| X/LB | 1.0180 | 1.0460 |
|---|---|---|
| PHI | | |
| .000 | .3174 | .2693 |
| 40.000 | .1831 | .1393 |

AMES 11-073(OA148) -140A/B/C ORB BODY FLAP LWR (XE8371)

ALPHA ( 4) = 7.997 BETA ( 1) = -3.873 MACH = 1.3969 Q = 600.27 P = 439.47 RN/L = 2.5191

SECTION ( 1)BODY FLAP LOWER DEPENDENT VARIABLE CP

| X/LB | 1.0190 | 1.0460 |
|---|---|---|
| PHI | | |
| .000 | .4168 | .3453 |
| 40.000 | .2743 | .1802 |

ALPHA ( 4) = 7.995 BETA ( 2) = .177 MACH = 1.3969 Q = 600.27 P = 439.47 RN/L = 2.5090

SECTION ( 1)BODY FLAP LOWER DEPENDENT VARIABLE CP

| X/LB | 1.0180 | 1.0460 |
|---|---|---|
| PHI | | |
| .000 | .4144 | .3430 |
| 40.000 | .2770 | .1952 |

ALPHA ( 4) = 7.892 BETA ( 3) = 4.237 MACH = 1.3969 Q = 600.27 P = 439.47 RN/L = 2.5090

SECTION ( 1)BODY FLAP LOWER DEPENDENT VARIABLE CP

| X/LB | 1.0180 | 1.0460 |
|---|---|---|
| PHI | | |
| .000 | .4189 | .3450 |
| 40.000 | .2701 | .2037 |

ALPHA ( 5) = 11.960 BETA ( 1) = -3.851 MACH = 1.3964 Q = 600.16 P = 439.71 RN/L = 2.5137

SECTION ( 1)BODY FLAP LOWER DEPENDENT VARIABLE CP

| X/LB | 1.0180 | 1.0460 |
|---|---|---|
| PHI | | |
| .000 | .5050 | .4067 |
| 40.000 | .3545 | .2446 |

ALPHA ( 5) = 11.969 BETA ( 2) = .177 MACH = 1.3964 Q = 600.16 P = 439.71 RN/L = 2.5137

SECTION ( 1)BODY FLAP LOWER DEPENDENT VARIABLE CP

| X/LB | 1.0180 | 1.0460 |
|---|---|---|
| PHI | | |
| .000 | .5105 | .4125 |
| 40.000 | .3623 | .2604 |

AMES 11-073(OA148) -140A/B/C ORB BODY FLAP LWR (XE8G71)

ALPHA ( 5) = 11.957 BETA ( 3) = 4.251 MACH = 1.3964 Q = 600.16 P = 439.71 RN/L = 2.9137

SECTION ( 1)BODY FLAP LOWER DEPENDENT VARIABLE CP

| X/LB | 1.0190 | 1.0460 |
|---|---|---|
| PHI | | |
| .000 | .5059 | .4068 |
| 40.000 | .3560 | .2716 |

ALPHA ( 6) = 15.903 BETA ( 1) = -3.840 MACH = 1.3960 Q = 600.45 P = 440.18 RN/L = 2.9185

SECTION ( 1)BODY FLAP LOWER DEPENDENT VARIABLE CP

| X/LB | 1.0180 | 1.0460 |
|---|---|---|
| PHI | | |
| .000 | .5958 | .4682 |
| 40.000 | .4446 | .3156 |

ALPHA ( 6) = 15.917 BETA ( 2) = .180 MACH = 1.3960 Q = 600.45 P = 440.18 RN/L = 2.9185

SECTION ( 1)BODY FLAP LOWER DEPENDENT VARIABLE CP

| X/LB | 1.0180 | 1.0460 |
|---|---|---|
| PHI | | |
| .000 | .5915 | .4716 |
| 40.000 | .4456 | .3197 |

ALPHA ( 6) = 15.910 BETA ( 3) = 4.280 MACH = 1.3960 Q = 600.45 P = 440.18 RN/L = 2.9185

SECTION ( 1)BODY FLAP LOWER DEPENDENT VARIABLE CP

| X/LB | 1.0180 | 1.0460 |
|---|---|---|
| PHI | | |
| .000 | .5893 | .4706 |
| 40.000 | .4353 | .3319 |

AMES 11-073(OA148) -140A/B/C ORB BODY FLAP LWR (XE8G72) ( 05 AUG 75 )

REFERENCE DATA

SREF = 2690.0000 SQ.FT. XMRP = 1076.6800 IN. XO
LREF = 474.8000 IN. YMRP = .0000 IN. YO
BREF = 936.0680 IN. ZMRP = 375.0000 IN. ZO
SCALE = .0300

PARAMETRIC DATA

RUDDER = -5.000 SPDBRK = 55.000
BDFLAP = 16.300 L-ELVN = -10.000
R-ELVN = -10.000 MACH = 1.250

ALPHA ( 1) = -3.944 BETA ( 1) = -3.854 MACH = 1.2471 Q = 599.40 P = 550.63 RN/L = 3.0068

SECTION ( 1)BODY FLAP LOWER DEPENDENT VARIABLE CP

| X/LB | 1.0180 | 1.0460 |
|---|---|---|
| PHI | | |
| .000 | .1795 | ..171 |
| 40.000 | -.0010 | -.0325 |

ALPHA ( 1) = -3.937 BETA ( 2) = .190 MACH = 1.2471 Q = 599.40 P = 550.63 RN/L = 3.0068

SECTION ( 1)BODY FLAP LOWER DEPENDENT VARIABLE CP

| X/LB | 1.0180 | 1.0460 |
|---|---|---|
| PHI | | |
| .000 | .1631 | .1149 |
| 40.000 | .0283 | -.0089 |

ALPHA ( 1) = -3.943 BETA ( 3) = 4.266 MACH = 1.2471 Q = 599.40 P = 550.63 RN/L = 3.0068

SECTION ( 1)BODY FLAP LOWER DEPENDENT VARIABLE CP

| X/LB | 1.0180 | 1.0460 |
|---|---|---|
| PHI | | |
| .000 | .1727 | .1149 |
| 40.000 | .0251 | .0005 |

ALPHA ( 2) = .045 BETA ( 1) = -3.865 MACH = 1.2470 Q = 599.89 P = 551.11 RN/L = 3.0108

SECTION ( 1)BODY FLAP LOWER DEPENDENT VARIABLE CP

| X/LB | 1.0180 | 1.0460 |
|---|---|---|
| PHI | | |
| .000 | .2326 | .1723 |
| 40.000 | .1173 | .0504 |

AMES 11-073(OA148) -140A/B/C ORB BODY FLAP LWR (XE8G72)

ALPHA ( 2) = .050 BETA ( 2) = .176 MACH = 1.2470 Q = 599.89 P = 551.11 RN/L = 3.0108

SECTION ( 1)BODY FLAP LOWER DEPENDENT VARIABLE CP

| X/LB | 1.0180 | 1.0460 |
|---|---|---|
| PHI | | |
| .000 | .2459 | .1715 |
| 40.000 | .0904 | .0322 |

ALPHA ( 2) = .045 BETA ( 3) = 4.247 MACH = 1.2470 Q = 599.89 P = 551.11 RN/L = 3.0108

SECTION ( 1)BODY FLAP LOWER DEPENDENT VARIABLE CP

| X/LB | 1.0180 | 1.0460 |
|---|---|---|
| PHI | | |
| .000 | .2323 | .1719 |
| 40.000 | .1019 | .0405 |

ALPHA ( 3) = 3.983 BETA ( 1) = -3.876 MACH = 1.2481 Q = 600.17 P = 550.40 RN/L = 3.0062

SECTION ( 1)BODY FLAP LOWER DEPENDENT VARIABLE CP

| X/LB | 1.0180 | 1.0460 |
|---|---|---|
| PHI | | |
| .000 | .3281 | .2408 |
| 40.000 | .1914 | .1047 |

ALPHA ( 3) = 3.983 BETA ( 2) = .181 MACH = 1.2481 Q = 600.17 P = 550.40 RN/L = 3.0062

SECTION ( 1)BODY FLAP LOWER DEPENDENT VARIABLE CP

| X/LB | 1.0180 | 1.0460 |
|---|---|---|
| PHI | | |
| .000 | .3325 | .2405 |
| 40.000 | .1840 | .0889 |

ALPHA ( 3) = 3.984 BETA ( 3) = 4.240 MACH = 1.2481 Q = 600.17 P = 550.40 RN/L = 3.0062

SECTION ( 1)BODY FLAP LOWER DEPENDENT VARIABLE CP

| X/LB | 1.0180 | 1.0460 |
|---|---|---|
| PHI | | |
| .000 | .3317 | .2431 |
| 40.000 | .1810 | .0964 |

AMES 11-073(OA148) -140A/B/C ORB BODY FLAP LWR (XE8G72)

ALPHA ( 4) = 7.933 BETA ( 1) = -3.872 MACH = 1.2470 Q = 599.90 P = 551.11 RN/L = 3.0127

SECTION ( 1)BODY FLAP LOWER DEPENDENT VARIABLE CP

| X/LB | 1.0180 | 1.0460 |
|---|---|---|
| PHI | | |
| .000 | .4201 | .3033 |
| 40.000 | .2575 | .1362 |

ALPHA ( 4) = 7.940 BETA ( 2) = .173 MACH = 1.2470 Q = 599.90 P = 551.11 RN/L = 3.0127

SECTION ( 1)BODY FLAP LOWER DEPENDENT VARIABLE CP

| X/LB | 1.0180 | 1.0460 |
|---|---|---|
| PHI | | |
| .000 | .4197 | .2966 |
| 40.000 | .2574 | .1386 |

ALPHA ( 4) = 7.943 BETA ( 3) = 4.236 MACH = 1.2470 Q = 599.90 P = 551.11 RN/L = 3.0127

SECTION ( 1)BODY FLAP LOWER DEPENDENT VARIABLE CP

| X/LB | 1.0180 | 1.0460 |
|---|---|---|
| PHI | | |
| .000 | .4237 | .3037 |
| 40.000 | .2579 | .1464 |

ALPHA ( 5) = 12.023 BETA ( 1) = -3.855 MACH = 1.2460 Q = 599.73 P = 551.81 RN/L = 3.0130

SECTION ( 1)BODY FLAP LOWER DEPENDENT VARIABLE CP

| X/LB | 1.0180 | 1.0460 |
|---|---|---|
| PHI | | |
| .000 | .5048 | .3596 |
| 40.000 | .3300 | .1837 |

ALPHA ( 5) = 12.037 BETA ( 2) = .182 MACH = 1.2460 Q = 599.73 P = 551.81 RN/L = 3.0130

SECTION ( 1)BODY FLAP LOWER DEPENDENT VARIABLE CP

| X/LB | 1.0163 | 1.0460 |
|---|---|---|
| PHI | | |
| [illegible] | .5072 | .3575 |
| [illegible] | .3317 | .1959 |

AMES 11-073(OA148) -140A/B/C ORB BODY FLAP LWR (XE8G72)

ALPHA ( 5) = 12.032 BETA ( 3) = 4.249 MACH = 1.2460 Q = 599.73 P = 551.81 RN/L = 3.0130

SECTION : 1 BODY FLAP LOWER DEPENDENT VARIABLE CP

| X/LB | 1.0180 | 1.0460 |
|---|---|---|
| PHI | | |
| .000 | .5093 | .3548 |
| +0.000 | .3282 | .1981 |

ORIGINAL PAGE IS
OF POOR QUALITY

AMES 11-073(OA148) -140A/B/C ORB BODY FLAP LW (XE8G73) ( 05 AUG 75 )

REFERENCE DATA

SREF = 2690.0000 SQ.FT. XMRP = 1076.6800 IN. XO
LREF = 474.8000 IN. YMRP = .0000 IN. YO
BREF = 936.0680 IN. ZMRP = 375.0000 IN. ZO
SCALE = .0300

PARAMETRIC DATA

RUDDER = -5.000 SPDBRK = 55.000
BDFLAP = 16.300 L-ELVN = -10.000
R-ELVN = -10.000 MACH = 1.100

ALPHA ( 1) = -3.958 BETA ( 1) = -3.850 MACH = 1.1008 Q = 600.53 P = 707.91 RN/L = 3.1821

SECTION ( 1)BODY FLAP LOWER DEPENDENT VARIABLE CP

| X/LB | 1.0180 | 1.0460 |
|---|---|---|
| PHI | | |
| .000 | .2093 | .1065 |
| 40.000 | .0112 | -.0221 |

ALPHA ( 1) = -3.953 BETA ( 2) = .190 MACH = 1.1008 Q = 600.53 P = 707.91 RN/L = 3.1821

SECTION ( 1)BODY FLAP LOWER DEPENDENT VARIABLE CP

| X/LB | 1.0180 | 1.0460 |
|---|---|---|
| PHI | | |
| .000 | .2201 | .1297 |
| 40.000 | .0526 | -.0055 |

ALPHA ( 1) = -3.950 BETA ( 3) = 4.266 MACH = 1.1008 Q = 600.53 P = 707.91 RN/L = 3.1821

SECTION ( 1)BODY FLAP LOWER DEPENDENT VARIABLE CP

| X/LB | 1.0180 | 1.0460 |
|---|---|---|
| PHI | | |
| .000 | .2087 | .1074 |
| 40.000 | .0380 | -.0366 |

ALPHA ( 2) = .047 BETA ( 1) = -3.869 MACH = 1.1000 Q = 599.94 P = 708.37 RN/L = 3.1830

SECTION ( 1)BODY FLAP LOWER DEPENDENT VARIABLE CP

| X/LB | 1.0180 | 1.0460 |
|---|---|---|
| PHI | | |
| .000 | .2430 | .1394 |
| 40.000 | .1269 | .0378 |

AMES 11-073(OA148) -140A/B/C ORB BODY FLAP LWR (XE8G73)

ALPHA ( 2) = .052 BETA ( 2) = .177 MACH = 1.1000 Q = 599.94 P = 708.37 RN/L = 3.1830

SECTION ( 1)BODY FLAP LOWER DEPENDENT VARIABLE CP

| X/LB | 1.0180 | 1.0460 |
|---|---|---|
| PHI | | |
| .000 | .2724 | .1521 |
| 40.000 | .1037 | .0084 |

ALPHA ( 2) = .046 BETA ( 3) = 4.245 MACH = 1.1000 Q = 599.94 P = 708.37 RN/L = 3.1830

SECTION ( 1)BODY FLAP LOWER DEPENDENT VARIABLE CP

| X/LB | 1.0180 | 1.0460 |
|---|---|---|
| PHI | | |
| .000 | .2490 | .1437 |
| 40.000 | .0346 | -.0150 |

ALPHA ( 3) = 4.012 BETA ( 1) = -3.872 MACH = 1.0998 Q = 599.99 P = 708.60 RN/L = 3.1803

SECTION ( 1)BODY FLAP LOWER DEPENDENT VARIABLE CP

| X/LB | 1.0180 | 1.0460 |
|---|---|---|
| PHI | | |
| .000 | .3190 | .1825 |
| 40.000 | .1811 | .0787 |

ALPHA ( 3) = 4.014 BETA ( 2) = .182 MACH = 1.0998 Q = 599.99 P = 708.60 RN/L = 3.1803

SECTION ( 1)BODY FLAP LOWER DEPENDENT VARIABLE CP

| X/LB | 1.0180 | 1.0460 |
|---|---|---|
| PHI | | |
| .000 | .3280 | .1805 |
| 40.000 | .1610 | .0314 |

ALPHA ( 3) = 4.006 BETA ( 3) = 4.238 MACH = 1.0998 Q = 599.99 P = 708.60 RN/L = 3.1803

SECTION ( 1)BODY FLAP LOWER DEPENDENT VARIABLE CP

| X/LB | 1.0180 | 1.0460 |
|---|---|---|
| PHI | | |
| .000 | .3238 | .1881 |
| 40.000 | .1490 | .0113 |

AMES 11-073(OA148) -140A/B/C ORB BODY FLAP LWR (XE8G73)

ALPHA ( 4) = 7.976 BETA ( 1) = -3.868 MACH = 1.1000 Q = 599.94 P = 708.36 RN/L = 3.1794

SECTION ( 1)BODY FLAP LOWER DEPENDENT VARIABLE CP

| X/LB | 1.0180 | 1.0460 |
|---|---|---|
| PHI | | |
| .000 | .3937 | .2242 |
| 40.000 | .2225 | .0891 |

ALPHA ( 4) = 7.984 BETA ( 2) = .174 MACH = 1.1000 Q = 599.94 P = 708.36 RN/L = 3.1794

SECTION ( 1)BODY FLAP LOWER DEPENDENT VARIABLE CP

| X/LB | 1.0180 | 1.0460 |
|---|---|---|
| PHI | | |
| .000 | .4025 | .2282 |
| 40.000 | .2230 | .0699 |

ALPHA ( 4) = 7.984 BETA ( 3) = 4.233 MACH = 1.1000 Q = 599.94 P = 708.36 RN/L = 3.1794

SECTION ( 1)BODY FLAP LOWER DEPENDENT VARIABLE CP

| X/LB | 1.0180 | 1.0460 |
|---|---|---|
| PHI | | |
| .000 | .4033 | .2306 |
| 40.000 | .2163 | .0536 |

ALPHA ( 5) = 12.067 BETA ( 1) = -3.848 MACH = 1.0997 Q = 599.84 P = 708.61 RN/L = 3.1785

SECTION ( 1)BODY FLAP LOWER DEPENDENT VARIABLE CP

| X/LB | 1.0180 | 1.0460 |
|---|---|---|
| PHI | | |
| .000 | .4770 | .2724 |
| 40.000 | .2798 | .1214 |

ALPHA ( 5) = 12.077 BETA ( 2) = .180 MACH = 1.0997 Q = 599.84 P = 708.61 RN/L = 3.1785

SECTION ( 1)BODY FLAP LOWER DEPENDENT VARIABLE CP

| X/LB | 1.0180 | 1.0460 |
|---|---|---|
| PHI | | |
| .000 | .4756 | .2705 |
| 40.000 | .2875 | .0996 |

AMES 11-073(OA148) -140A/B/C ORB BODY FLAP LWR (XE8G73)

ALPHA ( 5) = 12.076 BETA ( 3) = 4.245 MACH = 1.0997 Q = 599.84 P = 708.61 RN/L = 3.1785

SECTION ( 1)BODY FLAP LOWER DEPENDENT VARIABLE CP

| X/LB | 1.0180 | 1.0469 |
|---|---|---|
| PHI | | |
| .000 | .4781 | .2693 |
| 40.000 | .2807 | .0996 |

AMES 11-073(OA148) -140A/B/C ORB BODY FLAP LWR (XE8G74) ( 05 AUG 75 )

REFERENCE DATA

SREF = 2690.0000 SQ.FT. XMRP = 1076.6800 IN. XO
LREF = 474.9000 IN. YMRP = .0000 IN. YO
BREF = 936.0680 IN. ZMRP = 375.0000 IN. ZO
SCALE = .0300

PARAMETRIC DATA

RUDDER = -5.000 SPDBRK = 55.000
BDFLAP = 16.300 L-ELVN = -10.000
R-ELVN = -10.000 MACH = .900

ALPHA ( 1) = -3.999 BETA ( 1) = -3.854 MACH = .90080 Q = 600.60 P = 1057.3 RN/L = 3.5738

SECTION ( 1)BODY FLAP LOWER DEPENDENT VARIABLE CP

| X/LB | 1.0180 | 1.0460 |
|---|---|---|
| PHI | | |
| .000 | .2743 | .1095 |
| 40.000 | .0514 | .0202 |

ALPHA ( 1) = -3.915 BETA ( 2) = .189 MACH = .90080 Q = 600.60 P = 1057.3 RN/L = 3.5738

SECTION ( 1)BODY FLAP LOWER DEPENDENT VARIABLE CP

| X/LB | 1.0180 | 1.0460 |
|---|---|---|
| PHI | | |
| .000 | .2763 | .1166 |
| 40.000 | .1302 | .0236 |

ALPHA ( 1) = -3.961 BETA ( 3) = 4.266 MACH = .90080 Q = 600.60 P = 1057.3 RN/L = 3.5738

SECTION ( 1)BODY FLAP LOWER DEPENDENT VARIABLE CP

| X/LB | 1.0180 | 1.0460 |
|---|---|---|
| PHI | | |
| .000 | .2659 | .1014 |
| 40.000 | .1414 | .0147 |

ALPHA ( 2) = .055 BETA ( 1) = -3.868 MACH = .90127 Q = 600.67 P = 1056.4 RN/L = 3.5726

SECTION ( 1)BODY FLAP LOWER DEPENDENT VARIABLE CP

| X/LB | 1.0180 | 1.0460 |
|---|---|---|
| PHI | | |
| .000 | .2581 | .1043 |
| 40.000 | .1299 | .0369 |

AMES 11-073(OA148) -140A/B/C ORB BODY FLAP LWR (XE8G74)

ALPHA ( 2) = .084 BETA ( 2) = .180 MACH = .90127 Q = 600.67 P = 1056.4 RN/L = 3.5728

SECTION ( 1)BODY FLAP LOWER DEPENDENT VARIABLE CP

| X/LB | 1.0180 | 1.0460 |
|---|---|---|
| PHI | | |
| .000 | .2739 | .1105 |
| 40.000 | .1389 | .0296 |

ALPHA ( 2) = .055 BETA ( 3) = 4.248 MACH = .90127 Q = 600.67 P = 1056.4 RN/L = 3.5726

SECTION ( 1)BODY FLAP LOWER DEPENDENT VARIABLE CP

| X/LB | 1.0180 | 1.0460 |
|---|---|---|
| PHI | | |
| .000 | .2547 | .1049 |
| 40.000 | .1418 | .0086 |

ALPHA ( 3) = 4.001 BETA ( 1) = -3.875 MACH = .90140 Q = 601.01 P = 1056.6 RN/L = 3.5771

SECTION ( 1)BODY FLAP LOWER DEPENDENT VARIABLE CP

| X/LB | 1.0180 | 1.0460 |
|---|---|---|
| PHI | | |
| .000 | .3207 | .1253 |
| 40.000 | .2052 | .0590 |

ALPHA ( 3) = 4.079 BETA ( 2) = .183 MACH = .90140 Q = 601.01 P = 1056.6 RN/L = 3.5771

SECTION ( 1)BODY FLAP LOWER DEPENDENT VARIABLE CP

| X/LB | 1.0180 | 1.0460 |
|---|---|---|
| PHI | | |
| .000 | .3196 | .1248 |
| 40.000 | .1900 | .0362 |

ALPHA ( 3) = 4.001 BETA ( 3) = 4.242 MACH = .90140 Q = 601.01 P = 1056.6 RN/L = 3.5771

SECTION ( 1)BODY FLAP LOWER DEPENDENT VARIABLE CP

| X/LB | 1.0180 | 1.0460 |
|---|---|---|
| PHI | | |
| .000 | .3253 | .1243 |
| 40.000 | .1735 | .0176 |

ORIGINAL PAGE IS OF POOR QUALITY

AMES 11-073(OA148) -140A/B/C ORB BODY FLAP LWR (XE8G74)

ALPHA ( 4) = 7.933 BETA ( 1) = -3.872 MACH = .90130 Q = 600.85 P = 1056.6 RN/L = 3.5771

SECTION ( 1)BODY FLAP LOWER DEPENDENT VARIABLE CP

| X/LB | 1.0180 | 1.0460 |
|---|---|---|
| PHI | | |
| .000 | .3751 | .1399 |
| 40.000 | .2590 | .0650 |

ALPHA ( 4) = 8.028 BETA ( 2) = .177 MACH = .90130 Q = 600.85 P = 1056.6 RN/L = 3.5771

SECTION ( 1)BODY FLAP LOWER DEPENDENT VARIABLE CP

| X/LB | 1.0180 | 1.0460 |
|---|---|---|
| PHI | | |
| .000 | .3695 | .1398 |
| 40.000 | .2331 | .0410 |

ALPHA ( 4) = 8.031 BETA ( 3) = 4.235 MACH = .90130 Q = 600.85 P = 1056.6 RN/L = 3.5771

SECTION ( 1)BODY FLAP LOWER DEPENDENT VARIABLE CP

| X/LB | 1.0180 | 1.0460 |
|---|---|---|
| PHI | | |
| .000 | .3785 | .1394 |
| 40.000 | .2113 | .0213 |

ALPHA ( 5) = 11.980 BETA ( 1) = -3.859 MACH = .90157 Q = 601.36 P = 1056.9 RN/L = 3.5829

SECTION ( 1)BODY FLAP LOWER DEPENDENT VARIABLE CP

| X/LB | 1.0180 | 1.0460 |
|---|---|---|
| PHI | | |
| .000 | .4065 | .1524 |
| 40.000 | .2793 | .0708 |

ALPHA ( 5) = 12.020 BETA ( 2) = .183 MACH = .90157 Q = 601.36 P = 1056.9 RN/L = 3.5829

SECTION ( 1)BODY FLAP LOWER DEPENDENT VARIABLE CP

| X/LB | 1.0180 | 1.0460 |
|---|---|---|
| PHI | | |
| .000 | .4034 | .1576 |
| 40.000 | .2468 | .0510 |

AMES 11-073(OA148) -140A/B/C ORB BODY FLAP LWR (XE8G74)

ALPHA ( 5) = 12.084 BETA ( 3) = 4.256 MACH = .90157 Q = 601.36 P = 1056.9 RN/L = 3.5829

SECTION : 1)BODY FLAP LOWER DEPENDENT VARIABLE CP

| X/LB | 1.0180 | 1.0460 |
|---|---|---|
| PHI | | |
| .000 | .4081 | .1530 |
| 40.000 | .2212 | .0284 |

AMES 11-073(OA148) -140A/B/C ORB BODY FLAP LWR (XE8375) ( 05 4.3 75 )

REFERENCE DATA

SREF = 2690.0000 SQ.FT. XMRP = 1076.6900 IN. XO
LREF = 474.8000 IN. YMRP = .0000 IN. YO
BREF = 935.0680 IN. ZMRP = 375.0000 IN. ZO
SCALE = .0300

PARAMETRIC DATA

RUDDER = -5.000 SPOBRK = 55.000
BDFLAP = 16.300 L-ELVN = -10.000
R-ELVN = -10.000 MACH = .600

ALPHA ( 1) = -3.999 BETA ( 1) = -7.854 MACH = .59648 Q = 594.32 P = 2385.4 RN/L = 4.8575

SECTION ( 1)BODY FLAP LOWER DEPENDENT VARIABLE CP

| X/LB | 1.0180 | 1.0460 |
|---|---|---|
| PHI | | |
| .000 | .2022 | -.0104 |
| 40.000 | .0933 | -.0432 |

ALPHA ( 1) = -3.939 BETA ( 2) = -3.848 MACH = .59648 Q = 594.32 P = 2395.4 RN/L = 4.8575

SECTION ( 1 BODY FLAP LOWER DEPENDENT VARIABLE CP

| X/LB | 1.0180 | 1.0460 |
|---|---|---|
| PHI | | |
| .000 | .2271 | .0055 |
| 40.000 | .1315 | -.0434 |

ALPHA ( 1) = -3.939 BETA ( 3) = .197 MACH = .59648 Q = 594.32 P = 2388.4 RN/L = 4.8575

SECTION ( 1)BODY FLAP LOWER DEPENDENT VARIABLE CP

| X/LB | 1.0180 | 1.0460 |
|---|---|---|
| PHI | | |
| .000 | .2338 | .0059 |
| 40.000 | .1170 | -.0452 |

ALPHA ( 1) = -3.926 BETA ( 4) = 4.266 MACH = .59648 Q = 594.32 P = 2386.4 RN/L = 4.8575

SECTION ( 1)BODY FLAP LOWER DEPENDENT VARIABLE CP

| X/LB | 1.0180 | 1.0460 |
|---|---|---|
| PHI | | |
| .000 | .2142 | -.0102 |
| 40.000 | .1145 | -.0504 |

AMES 11-073(OA148) -140A/B/C ORB BODY FLAP LWR (XE8G75)

ALPHA ( 1) = -3.941 BETA ( 5) = 8.332 MACH = .59648 Q = 594.32 P = 2386.4 RN/L = 4.8576

SECTION ( 1)BODY FLAP LOWER DEPENDENT VARIABLE CP

| X/LB | 1.0180 | 1.0460 |
|---|---|---|
| PHI | | |
| .000 | .2008 | -.0228 |
| 40.000 | .0961 | -.0638 |

ALPHA ( 2) = .043 BETA ( 1) = -7.890 MACH = .59624 Q = 593.85 P = 2386.3 RN/L = 4.8579

SECTION ( 1)BODY FLAP LOWER DEPENDENT VARIABLE CP

| X/LB | 1.0180 | 1.0460 |
|---|---|---|
| PHI | | |
| .000 | .2406 | -.0074 |
| 40.000 | .1223 | -.0296 |

ALPHA ( 2) = .091 BETA ( 2) = -3.863 MACH = .59624 Q = 593.85 P = 2386.3 RN/L = 4.8579

SECTION ( 1)BODY FLAP LOWER DEPENDENT VARIABLE CP

| X/LB | 1.0180 | 1.0460 |
|---|---|---|
| PHI | | |
| .000 | .2305 | -.0009 |
| 40.000 | .1519 | -.0384 |

ALPHA ( 2) = .092 BETA ( 3) = .181 MACH = .59624 Q = 593.85 P = 2386.3 RN/L = 4.8579

SECTION ( 1)BODY FLAP LOWER DEPENDENT VARIABLE CP

| X/LB | 1.0180 | 1.0460 |
|---|---|---|
| PHI | | |
| .000 | .2349 | .0041 |
| 40.000 | .1278 | -.0469 |

ALPHA ( 2) = .077 BETA ( 4) = 4.247 MACH = .59624 Q = 593.85 P = 2386.3 RN/L = 4.8579

SECTION ( 1)BODY FLAP LOWER DEPENDENT VARIABLE CP

| X/LB | 1.0180 | 1.0460 |
|---|---|---|
| PHI | | |
| .000 | .2316 | -.0049 |
| 40.000 | .1145 | -.0601 |

AMES 11-073(OA148) -140A/B/C ORB BODY FLAP LWR (XE8G75)

ALPHA ( 2) = .073 BETA ( 5) = 8.305 MACH = .59624 Q = 593.85 P = 2386.3 RN/L = 4.8579

SECTION ( 1)BODY FLAP LOWER DEPENDENT VARIABLE CP

| X/LB | 1.0180 | 1.0460 |
|---|---|---|
| PHI | | |
| .000 | .2380 | -.0153 |
| 40.000 | .1046 | -.0642 |

ALPHA ( 3) = 4.023 BETA ( 1) = -7.904 MACH = .59640 Q = 594.21 P = 2386.5 RN/L = 4.8659

SECTION ( 1)BODY FLAP LOWER DEPENDENT VARIABLE CP

| X/LB | 1.0180 | 1.0460 |
|---|---|---|
| PHI | | |
| .000 | .2632 | .0029 |
| 40.000 | .1531 | -.0212 |

ALPHA ( 3) = 4.026 BETA ( 2) = -3.864 MACH = .59640 Q = 594.21 P = 2386.5 RN/L = 4.8659

SECTION ( 1)BODY FLAP LOWER DEPENDENT VARIABLE CP

| X/LB | 1.0180 | 1.0460 |
|---|---|---|
| PHI | | |
| .000 | .2533 | .0072 |
| 40.000 | .1694 | -.0331 |

ALPHA ( 3) = 4.153 BETA ( 3) = .177 MACH = .59640 Q = 594.21 P = 2386.5 RN/L = 4.8659

SECTION ( 1)BODY FLAP LOWER DEPENDENT VARIABLE CP

| X/LB | 1.0180 | 1.0460 |
|---|---|---|
| PHI | | |
| .000 | .2524 | .0105 |
| 40.000 | .1457 | -.0469 |

ALPHA ( 3) = 4.012 BETA ( 4) = 4.240 MACH = .59640 Q = 594.21 P = 2386.5 RN/L = 4.8659

SECTION ( 1)BODY FLAP LOWER DEPENDENT VARIABLE CP

| X/LB | 1.0180 | 1.0460 |
|---|---|---|
| PHI | | |
| .000 | .2535 | .0019 |
| 40.000 | .1308 | -.0514 |

AMES 11-073(OA148) -140A/B/C ORB BODY FLAP LWR (XE8G75)

ALPHA ( 3) = 4.017 BETA ( 5) = 8.288 MACH = .59640 Q = 594.21 P = 2386.5 RN/L = 4.8659

SECTION ( 1)BODY FLAP LOWER DEPENDENT VARIABLE CP

| X/LB | 1.0180 | 1.0460 |
|---|---|---|
| PHI | | |
| .000 | .2590 | -.0109 |
| 40.000 | .1252 | -.0540 |

ALPHA ( 4) = 7.959 BETA ( 1) = -7.893 MACH = .59626 Q = 593.97 P = 2386.7 RN/L = 4.8657

SECTION ( 1)BODY FLAP LOWER DEPENDENT VARIABLE CP

| X/LB | 1.0180 | 1.0460 |
|---|---|---|
| PHI | | |
| .000 | .2847 | .0129 |
| 40.000 | .1892 | -.0149 |

ALPHA ( 4) = 7.971 BETA ( 2) = -3.853 MACH = .59626 Q = 593.97 P = 2386.7 RN/L = 4.8657

SECTION ( 1)BODY FLAP LOWER DEPENDENT VARIABLE CP

| X/LB | 1.0180 | 1.0460 |
|---|---|---|
| PHI | | |
| .000 | .2739 | .0211 |
| 40.000 | .1806 | -.0315 |

ALPHA ( 4) = 8.077 BETA ( 3) = .178 MACH = .59626 Q = 593.97 P = 2386.7 RN/L = 4.8657

SECTION ( 1)BODY FLAP LOWER DEPENDENT VARIABLE CP

| X/LB | 1.0180 | 1.0460 |
|---|---|---|
| PHI | | |
| .000 | .2838 | .0213 |
| 40.000 | .1595 | -.0325 |

ALPHA ( 4) = 8.079 BETA ( 4) = 4.235 MACH = .59626 Q = 593.97 P = 2386.7 RN/L = 4.8657

SECTION ( 1)BODY FLAP LOWER DEPENDENT VARIABLE CP

| X/LB | 1.0180 | 1.0460 |
|---|---|---|
| PHI | | |
| .000 | .2827 | .0143 |
| 40.000 | .1572 | -.0325 |

AMES 11-073(OA148) -140A/B/C ORB BODY FLAP LWR (XE8G75)

ALPHA ( 4) = 9.076 BETA ( 5) = 8.290 MACH = .59626 Q = 593.97 P = 2386.7 RN/L = 4.8657

SECTION ( 1)BODY FLAP LOWER DEPENDENT VARIABLE CP

| X/LB | 1.0180 | 1.0460 |
|---|---|---|
| PHI | | |
| .000 | .2840 | .0021 |
| 40.000 | .1439 | -.0351 |

ALPHA ( 5) = 11.984 BETA ( 1) = -7.850 MACH = .59636 Q = 594.09 P = 2386.3 RN/L = 4.8671

SECTION ( 1)BODY FLAP LOWER DEPENDENT VARIABLE CP

| X/LB | 1.0180 | 1.0460 |
|---|---|---|
| PHI | | |
| .000 | .3054 | .0289 |
| 40.000 | .2111 | .0001 |

ALPHA ( 5) = 12.003 BETA ( 2) = -3.840 MACH = .59636 Q = 594.09 P = 2386.3 RN/L = 4.8671

SECTION ( 1)BODY FLAP LOWER DEPENDENT VARIABLE CP

| X/LB | 1.0180 | 1.0460 |
|---|---|---|
| PHI | | |
| .000 | .3071 | .0359 |
| 40.000 | [illegible] | -.0138 |

ALPHA ( 5) = 12.005 BETA ( 3) = [illegible]180 MACH = .59636 Q = 594.09 P = 2386.3 RN/L = 4.8671

SECTION ( 1)BODY FLAP LOWER DEPENDENT VARIABLE CP

| X/LB | 1.0180 | 1.0460 |
|---|---|---|
| PHI | | |
| .000 | [illegible] | .0399 |
| 40.000 | [illegible] | [illegible] |

ALPHA ( 5) = 12.007 BETA ( 4) = [illegible]244 MACH = .59636 Q = 594.09 P = 2386.3 RN/L = [illegible]

SECTION ( 1)BODY FLAP LOWER DEPENDENT VARIABLE CP

| X/LB | 1.0180 | 1.0460 |
|---|---|---|
| PHI | | |
| .000 | [illegible] | [illegible] |
| 40.000 | [illegible] | [illegible] |

AMES 11-073(OA148) -140A/B/C ORB BODY FLAP LWR (XE8G75)

ALPHA ( 5) = 12.114 BETA ( 5) = 8.307 MACH = .59636 Q = 594.09 P = 2386.3 RN/L = 4.8671

SECTION ( 1)BODY FLAP LOWER DEPENDENT VARIABLE CP

| X/LB | 1.0180 | 1.0460 |
|---|---|---|
| PHI | | |
| .000 | .3038 | .0165 |
| 40.000 | .1577 | -.0406 |

ORIGINAL PAGE IS
OF POOR QUALITY

AMES 11-073(OA148) -140A/B/C ORB BODY FLAP LWR (XE8G76) ( 05 AUG 75 )

REFERENCE DATA

SREF = 2690.0000 SQ.FT. XMRP = 1076.6900 IN. XO
LREF = 474.9000 IN. YMRP = .0000 IN. YO
BREF = 935.0590 IN. ZMRP = 375.0000 IN. ZO
SCALE = .0300

PARAMETRIC DATA

RUDDER = -10.000 SPDBRK = .000
BDFLAP = -11.700 L-ELVN = 10.000
R-ELVN = -10.000 MACH = 1.400

ALPHA ( 1) = -4.004 BETA ( 1) = -3.853 MACH = 1.3930 Q = 598.57 P = 440.65 RN/L = 2.9057

SECTION ( 1)BODY FLAP LOWER DEPENDENT VARIABLE CP

| X/LB | 1.0180 | 1.0460 |
|---|---|---|
| PHI | | |
| .000 | -.4382 | -.4511 |
| 40.000 | -.3969 | -.3221 |

ALPHA ( 1) = -4.001 BETA ( 2) = .191 MACH = 1.3930 Q = 598.57 P = 440.65 RN/L = 2.9057

SECTION ( 1)BODY FLAP LOWER DEPENDENT VARIABLE CP

| X/LB | 1.0180 | 1.0460 |
|---|---|---|
| PHI | | |
| .000 | -.4395 | -.4558 |
| 40.000 | -.3990 | -.3262 |

ALPHA ( 1) = -3.983 BETA ( 3) = 4.275 MACH = 1.3930 Q = 598.57 P = 440.55 RN/L = 2.9057

SECTION ( 1)BODY FLAP LOWER DEPENDENT VARIABLE CP

| X/LB | 1.0180 | 1.0460 |
|---|---|---|
| PHI | | |
| .000 | -.4480 | -.4567 |
| 40.000 | -.4074 | -.3286 |

ALPHA ( 2) = .029 BETA ( 1) = -3.865 MACH = 1.3913 Q = 598.64 P = 441.83 RN/L = 2.9093

SECTION ( 1)BODY FLAP LOWER DEPENDENT VARIABLE CP

| X/LB | 1.0180 | 1.0460 |
|---|---|---|
| PHI | | |
| .000 | -.4038 | -.4165 |
| 40.000 | -.3870 | -.2971 |

AMES 11-073(OA146 -140A/B/C ORB BODY FLAP LWR (XE8G76)

ALPHA ( 2) = .033 BETA ( 2) = .181 MACH = 1.3913 Q = 598.64 P = 441.83 RN/L = 2.9093

SECTION ( 1)BODY FLAP LOWER DEPENDENT VARIABLE CP

| X/LB | 1.0180 | 1.0460 |
|---|---|---|
| PHI | | |
| .000 | -.4041 | -.4219 |
| 40.000 | -.3847 | -.3087 |

ALPHA ( 2) = .029 BETA ( 3) = 4.255 MACH = 1.3913 Q = 598.64 P = 441.83 RN/L = 2.9093

SECTION ( 1)BODY FLAP LOWER DEPENDENT VARIABLE CP

| X/LB | 1.0180 | 1.0460 |
|---|---|---|
| PHI | | |
| .000 | -.4181 | -.4349 |
| 40.000 | -.3873 | -.3088 |

ALPHA ( 3) = 3.961 BETA ( 1) = -3.871 MACH = 1.3919 Q = 599.88 P = 442.29 RN/L = 2.9174

SECTION ( 1)BODY FLAP LOWER DEPENDENT VARIABLE CP

| X/LB | 1.0180 | 1.0460 |
|---|---|---|
| PHI | | |
| .000 | -.3734 | -.3851 |
| 40.000 | -.3727 | -.2747 |

ALPHA ( 3) = 3.962 BETA ( 2) = .187 MACH = 1.3919 Q = 599.88 P = 442.29 RN/L = 2.9174

SECTION ( 1)BODY FLAP LOWER DEPENDENT VARIABLE CP

| X/LB | 1.0180 | 1.0460 |
|---|---|---|
| PHI | | |
| .000 | -.3718 | -.3859 |
| 40.000 | -.3629 | -.2834 |

ALPHA ( 3) = 3.963 BETA ( 3) = 4.246 MACH = 1.3919 Q = 599.88 P = 442.29 RN/L = 2.9174

SECTION ( 1)BODY FLAP LOWER DEPENDENT VARIABLE CP

| X/LB | 1.0180 | 1.0460 |
|---|---|---|
| PHI | | |
| .000 | -.3787 | -.3954 |
| 40.000 | -.3569 | -.2789 |

AMES 11-073(OA148) -140A/B/C ORB BODY FLAP LWR (XE8076)

ALPHA ( 4) = 7.887 BETA ( 1) = -3.866 MACH = 1.3932 Q = 600.00 P = 441.59 RN/L = 2.9153

SECTION ( 1)BODY FLAP LOWER DEPENDENT VARIABLE CP

| X/LB | 1.0180 | 1.0460 |
|---|---|---|
| PHI | | |
| .000 | -.3468 | -.3619 |
| 40.000 | -.3322 | -.2496 |

ALPHA ( 4) = 7.964 BETA ( 2) = .189 MACH = 1.3932 Q = 600.00 P = 441.59 RN/L = 2.9153

SECTION ( 1)BODY FLAP LOWER DEPENDENT VARIABLE CP

| X/LB | 1.0180 | 1.0460 |
|---|---|---|
| PHI | | |
| .000 | -.3448 | -.3563 |
| 40.000 | -.3388 | -.2563 |

ALPHA ( 4) = 7.961 BETA ( 3) = 4.247 MACH = 1.3932 Q = 600.00 P = 441.59 RN/L = 2.9153

SECTION ( 1)BODY FLAP LOWER DEPENDENT VARIABLE CP

| X/LB | 1.0180 | 1.0460 |
|---|---|---|
| PHI | | |
| .000 | -.3508 | -.3504 |
| 40.000 | -.3436 | -.2711 |

ALPHA ( 5) = 11.871 BETA ( 1) = -3.849 MACH = 1.3930 Q = 600.10 P = 441.32 RN/L = 2.9227

SECTION ( 1)BODY FLAP LOWER DEPENDENT VARIABLE CP

| X/LB | 1.0180 | 1.0460 |
|---|---|---|
| PHI | | |
| .000 | -.3209 | -.3321 |
| 40.000 | -.3221 | -.2159 |

ALPHA ( 5) = 11.913 BETA ( 2) = .191 MACH = 1.3930 Q = 600.10 P = 441.82 RN/L = 2.9227

SECTION ( 1)BODY FLAP LOWER DEPENDENT VARIABLE CP

| X/LB | 1.0180 | 1.0460 |
|---|---|---|
| PHI | | |
| .000 | -.3147 | -.3243 |
| 40.000 | -.3322 | -.2433 |

AMES 11-073(OA148) -140A/B/C ORB BODY FLAP LWR (XE8G76)

ALPHA ( 5) = 11.908 BETA ( 3) = 4.262 MACH = 1.3930 Q = 600.10 P = 441.82 RN/L = 2.9227

SECTION ( 1)BODY FLAP LOWER DEPENDENT VARIABLE CP

| X/LB | 1.0180 | 1.0460 |
|---|---|---|
| PHI | | |
| .000 | -.3159 | -.3243 |
| 40.000 | -.3288 | -.2640 |

ALPHA ( 6) = 15.905 BETA ( 1) = -3.830 MACH = 1.3921 Q = 600.28 P = 442.53 RN/L = 2.9208

SECTION ( 1)BODY FLAP LOWER DEPENDENT VARIABLE CP

| X/LB | 1.0180 | 1.0460 |
|---|---|---|
| PHI | | |
| .000 | -.2920 | -.2992 |
| 40.000 | -.3305 | -.2162 |

ALPHA ( 6) = 15.917 BETA ( 2) = .190 MACH = 1.3921 Q = 600.28 P = 442.53 RN/L = 2.9208

SECTION ( 1)BODY FLAP LOWER DEPENDENT VARIABLE CP

| X/LB | 1.0180 | 1.0460 |
|---|---|---|
| PHI | | |
| .000 | -.2947 | -.2998 |
| 40.000 | -.3249 | -.2634 |

ALPHA ( 6) = 15.907 BETA ( 3) = 4.290 MACH = 1.3921 Q = 600.28 P = 442.53 RN/L = 2.9208

SECTION ( 1)BODY FLAP LOWER DEPENDENT VARIABLE CP

| X/LB | 1.0180 | 1.0460 |
|---|---|---|
| PHI | | |
| .000 | -.2808 | -.2959 |
| 40.000 | -.3237 | -.2878 |

AMES 11-073(OA148) -140A/B/C ORB BODY FLAP LWR (XE8G77) ( 05 AUG 75 )

REFERENCE DATA

SREF = 2690.0000 SQ.FT. XMRP = 1076.6800 IN. XO
LREF = 474.8000 IN. YMRP = .0000 IN. YO
BREF = 936.0680 IN. ZMRP = 375.0000 IN. ZO
SCALE = .0300

PARAMETRIC DATA

RUDDER = -10.000 SPDBRK = .000
BDFLAP = -11.700 L-ELVN = 10.000
R-ELVN = -10.000 MACH = 1.250

ALPHA ( 1) = -4.016 BETA ( 1) = -3.849 MACH = 1.2454 Q = 599.63 P = 552.28 RN/L = 3.0204

SECTION ( 1)BODY FLAP LOWER DEPENDENT VARIABLE CP

| X/LB | 1.0180 | 1.0460 |
|---|---|---|
| PHI | | |
| .000 | -.5417 | -.5604 |
| 40.000 | -.4685 | .3641 |

ALPHA ( 1) = -4.011 BETA ( 2) = .186 MACH = 1.2454 Q = 599.63 P = 552.28 RN/L = 3.0204

SECTION ( 1)BODY FLAP LOWER DEPENDENT VARIABLE CP

| X/LB | 1.0180 | 1.0460 |
|---|---|---|
| PHI | | |
| .000 | -.5478 | -.5699 |
| 40.000 | -.4390 | -.3752 |

ALPHA ( 1) = -4.020 BETA ( 3) = 4.275 MACH = 1.2454 Q = 599.63 P = 552.28 RN/L = 3.0204

SECTION ( 1)BODY FLAP LOWER DEPENDENT VARIABLE CP

| X/LB | 1.0180 | 1.0460 |
|---|---|---|
| PHI | | |
| .000 | -.5590 | -.5794 |
| 40.000 | -.4772 | -.3863 |

ALPHA ( 2) = .012 BETA ( 1) = -3.863 MACH = 1.2451 Q = 599.58 P = 552.51 RN/L = 3.0183

SECTION ( 1)BODY FLAP LOWER DEPENDENT VARIABLE CP

| X/LB | 1.0180 | 1.0460 |
|---|---|---|
| PHI | | |
| .000 | -.5024 | -.5192 |
| 40.000 | -.4438 | -.3323 |

AMES 11-073(OA148) -140A/B/C ORB BODY FLAP LWR (XE8G77)

ALPHA ( 2) = .014 BETA ( 2) = .176 MACH = 1.2451 Q = 599.58 P = 552.51 RN/L = 3.0183

SECTION ( 1)BODY FLAP LOWER DEPENDENT VARIABLE CP

| X/LB | 1.0180 | 1.0460 |
|---|---|---|
| PHI | | |
| .000 | -.5083 | -.5320 |
| 40.000 | -.4526 | -.3493 |

ALPHA ( 2) = .026 BETA ( 3) = 4.255 MACH = 1.2451 Q = 599.58 P = 552.51 RN/L = 3.0183

SECTION ( 1)BODY FLAP LOWER DEPENDENT VARIABLE CP

| X/LB | 1.0180 | 1.0460 |
|---|---|---|
| PHI | | |
| .000 | -.5200 | -.5390 |
| 40.000 | -.4702 | -.3564 |

ALPHA ( 3) = 3.997 BETA ( 1) = -3.868 MACH = 1.2451 Q = 599.58 P = 552.51 RN/L = 3.0187

SECTION ( 1)BODY FLAP LOWER DEPENDENT VARIABLE CP

| X/LB | 1.0180 | 1.0460 |
|---|---|---|
| PHI | | |
| .000 | -.4702 | -.4860 |
| 40.000 | -.4379 | -.3193 |

ALPHA ( 3) = 3.988 BETA ( 2) = .182 MACH = 1.2451 Q = 599.58 P = 552.51 RN/L = 3.0187

SECTION ( 1)BODY FLAP LOWER DEPENDENT VARIABLE CP

| X/LB | 1.0180 | 1.0460 |
|---|---|---|
| PHI | | |
| .000 | -.4719 | -.4945 |
| 40.000 | -.4394 | -.3221 |

ALPHA ( 3) = 3.988 BETA ( 3) = 4.246 MACH = 1.2451 Q = 599.58 P = 552.51 RN/L = 3.0187

SECTION ( 1)BODY FLAP LOWER DEPENDENT VARIABLE CP

| X/LB | 1.0180 | 1.0460 |
|---|---|---|
| PHI | | |
| .000 | -.4809 | -.5020 |
| 40.000 | -.4463 | -.3230 |

ORIGINAL PAGE IS OF POOR QUALITY

AMES 11-073(OA148) -140A/B/C ORB BODY FLAP LWR (XE8077)

ALPHA ( 4) = 7.974 BETA ( 1) = -3.859 MACH = 1.2449 Q = 599.64 P = 552.75 RN/L = 3.0238

SECTION ( 1)BODY FLAP LOWER DEPENDENT VARIABLE CP

| X/LB | 1.0180 | 1.0460 |
|---|---|---|
| PHI | | |
| .000 | -.4470 | -.4609 |
| 40.000 | -.4010 | -.2935 |

ALPHA ( 4) = 7.979 BETA ( 2) = .184 MACH = 1.2449 Q = 599.64 P = 552.75 RN/L = 3.0238

SECTION ( 1)BODY FLAP LOWER DEPENDENT VARIABLE CP

| X/LB | 1.0180 | 1.0460 |
|---|---|---|
| PHI | | |
| .000 | -.4391 | -.4604 |
| 40.000 | -.4177 | -.2974 |

ALPHA ( 4) = 7.978 BETA ( 3) = 4.242 MACH = 1.2449 Q = 599.64 P = 552.75 RN/L = 3.0238

SECTION ( 1)BODY FLAP LOWER DEPENDENT VARIABLE CP

| X/LB | 1.0180 | 1.0460 |
|---|---|---|
| PHI | | |
| .000 | -.4458 | -.4676 |
| 40.000 | -.4314 | -.3123 |

ALPHA ( 5) = 11.961 BETA ( 1) = -3.847 MACH = 1.2454 Q = 599.63 P = 552.28 RN/L = 3.0229

SECTION ( 1)BODY FLAP LOWER DEPENDENT VARIABLE CP

| X/LB | 1.0180 | 1.0460 |
|---|---|---|
| PHI | | |
| .000 | -.4251 | -.4388 |
| 40.000 | -.3790 | -.2727 |

ALPHA ( 5) = 11.970 BETA ( 2) = .192 MACH = 1.2454 Q = 599.63 P = 552.28 RN/L = 3.0229

SECTION ( 1)BODY FLAP LOWER DEPENDENT VARIABLE CP

| X/LB | 1.0180 | 1.0460 |
|---|---|---|
| PHI | | |
| .000 | -.4147 | -.4353 |
| 40.000 | -.4214 | -.2960 |

AMES 11-073(OA148) -140A/B/C ORB BODY FLAP LWR (XE8677)

ALPHA ( 5) = 11.962 BETA ( 3) = 4.260 MACH = 1.2454 Q = 599.63 P = 552.28 RN L = 3.2229

SECTION ( 1)BODY FLAP LOWER DEPENDENT VARIABLE CP

| X/LB | 1.0180 | 1.0460 |
|---|---|---|
| PHI | | |
| .000 | -.4195 | -.4399 |
| 40.000 | -.4205 | -.2961 |

ORIGINAL PAGE IS
OF POOR QUALITY

AMES 11-073(OA148) -140A/B/C ORB BODY FLAP LWR (XEBOTB) 05 [illegible] 75

REFERENCE DATA

SREF = 2630.0000 SQ.FT. XMRP = 1076.6800 IN. XO
LREF = 474.8000 IN. YMRP = .0000 IN. YO
BREF = 936.0000 IN. ZMRP = 375.0000 IN. ZO
SCALE = .0300

PARAMETRIC DATA

RUDDER = -10.000 SPDBRK = .000
BOFLAP = -11.700 L-ELVN = 10.000
R-ELVN = -10.000 MACH = 1.100

ALPHA ( 1) = -4.082 BETA ( 1) = -3.838 MACH = 1.0993 Q = 599.81 P = 709.05 RN/L = 3.1896

SECTION ( 1)BODY FLAP LOWER DEPENDENT VARIABLE CP

| X/LB | 1.0180 | 1.0460 |
|---|---|---|
| PHI | | |
| .000 | -.6916 | -.6550 |
| 40.000 | -.4498 | -.3707 |

ALPHA ( 1) = -4.059 BETA ( 2) = .195 MACH = 1.0993 Q = 599.81 P = 709.05 RN/L = 3.1896

SECTION ( 1)BODY FLAP LOWER DEPENDENT VARIABLE CP

| X/LB | 1.0180 | 1.0460 |
|---|---|---|
| PHI | | |
| .000 | -.6956 | -.7091 |
| 40.000 | -.4729 | -.4083 |

ALPHA ( 1) = -4.055 BETA ( 3) = 4.277 MACH = 1.0993 Q = 599.81 P = 709.05 RN/L = 3.1896

SECTION ( 1)BODY FLAP LOWER DEPENDENT VARIABLE CP

| X/LB | 1.0180 | 1.0460 |
|---|---|---|
| PHI | | |
| .000 | -.7113 | -.6701 |
| 40.000 | -.5604 | -.4599 |

ALPHA ( 2) = .040 BETA ( 1) = -3.853 MACH = 1.0990 Q = 599.71 P = 709.30 RN/L = 3.1896

SECTION ( 1)BODY FLAP LOWER DEPENDENT VARIABLE CP

| X/LB | 1.0180 | 1.0460 |
|---|---|---|
| PHI | | |
| .000 | -.6616 | -.6441 |
| 40.000 | -.4498 | -.3627 |

AMES 11-073(OA1 URB BODY FLAP LWR (XE8G78)

ALPHA ( 2) = .041 BETA ( 2) = .186 MACH .0990 Q = 599.71 P = 709.30 RN/L = 3.1896

SECTION ( 1)BODY FLAP LOWER DEPENDENT VARIABLE CP

| X/LB | 1.0180 | 1.0460 |
|---|---|---|
| PHI | | |
| .000 | -.6530 | -.6826 |
| 40.000 | -.4621 | -.3800 |

ALPHA ( 2) = .036 BETA ( 3) = 4.252 MACH = 1.0990 Q = 599.71 P = 709.30 RN/L = 3.1896

SECTION ( 1)BODY FLAP LOWER DEPENDENT VARIABLE CP

| X/LB | 1.0180 | 1.0460 |
|---|---|---|
| PHI | | |
| .000 | -.6762 | -.6863 |
| 40.000 | -.5357 | -.4180 |

ALPHA ( 3) = 4.006 BETA ( 1) = -3.864 MACH = 1.0989 Q = 599.58 P = 709.30 RN/L = 3.1896

SECTION ( 1)BODY FLAP LOWER DEPENDENT VARIABLE CP

| X/LB | 1.0180 | 1.0460 |
|---|---|---|
| PHI | | |
| .000 | -.6421 | -.6315 |
| 40.000 | -.4496 | -.3592 |

ALPHA ( 3) = 4.004 BETA ( 2) = .194 MACH = 1.0989 Q = 599.58 P = 709.30 RN/L = 3.1896

SECTION ( 1)BODY FLAP LOWER DEPENDENT VARIABLE CP

| X/LB | 1.0180 | 1.0460 |
|---|---|---|
| PHI | | |
| .000 | -.6393 | -.6582 |
| 40.000 | -.4604 | -.3539 |

ALPHA ( 3) = 4.004 BETA ( 3) = 4.242 MACH = 1.0989 Q = 599.58 P = 709.30 RN/L = 3.1896

SECTION ( 1)BODY FLAP LOWER DEPENDENT VARIABLE CP

| X/LB | 1.0180 | 1.0460 |
|---|---|---|
| PHI | | |
| .000 | .6494 | -.6719 |
| 40.000 | -.5223 | -.3813 |

AMES 11-073(OA148) -140A/B/C ORB BODY FLAP LWR (XEBG78)

ALPHA ( 4) = 8.022 BETA ( 1) = -3.857 MACH = 1.1003 Q = 600.35 P = 708.37 RN/L = 3.1925

SECTION ( 1)BODY FLAP LOWER DEPENDENT VARIABLE CP

| X/LB | 1.0180 | 1.0460 |
|---|---|---|
| PHI | | |
| .000 | -.6095 | -.6028 |
| 40.000 | -.4439 | -.3325 |

ALPHA ( 4) = 8.002 BETA ( 2) = .186 MACH = 1.1003 Q = 600.35 P = 708.37 RN/L = 3.1925

SECTION ( 1)BODY FLAP LOWER DEPENDENT VARIABLE CP

| X/LB | 1.0180 | 1.0460 |
|---|---|---|
| PHI | | |
| .000 | -.6145 | -.6351 |
| 40.000 | -.4602 | -.3265 |

ALPHA ( 4) = 7.997 BETA ( 3) = 4.238 MACH = 1.1003 Q = 600.35 P = 708.37 RN/L = 3.1925

SECTION ( 1)BODY FLAP LOWER DEPENDENT VARIABLE CP

| X/LB | 1.0180 | 1.0460 |
|---|---|---|
| PHI | | |
| .000 | -.6193 | -.6411 |
| 40.000 | -.5138 | -.3899 |

ALPHA ( 5) = 11.963 BETA ( 1) = -3.838 MACH = 1.0980 Q = 599.15 P = 710.01 RN/L = 3.1917

SECTION ( 1)BODY FLAP LOWER DEPENDENT VARIABLE CP

| X/LB | 1.0180 | 1.0460 |
|---|---|---|
| PHI | | |
| .000 | -.5878 | -.5930 |
| 40.000 | -.4383 | -.3234 |

ALPHA ( 5) = 11.967 BETA ( 2) = .194 MACH = 1.0980 Q = 599.15 P = 710.01 RN/L = 3.1917

SECTION ( 1)BODY FLAP LOWER DEPENDENT VARIABLE CP

| X/LB | 1.0180 | 1.0460 |
|---|---|---|
| PHI | | |
| .000 | -.5927 | -.6105 |
| 40.000 | -.4985 | -.3250 |

AMES 11-073(OA148) -140A/B/C ORB BODY FLAP LWR (XE8G78)

ALPHA ( 5) = 11.958 BETA ( 3) = 4.256 MACH = 1.0980 Q = 599.15 P = 710.01 RN/L = 3.1917

SECTION ( 1)BODY FLAP LOWER DEPENDENT VARIABLE CP

| X/LB | 1.0180 | 1.0460 |
|---|---|---|
| PHI | | |
| .000 | -.5959 | -.6136 |
| 40.000 | -.5252 | -.3694 |

AMES 11-073(OA148) -140A/B/C ORB BODY FLAP LWR (XE8G79) ( 05 AUG 75 )

REFERENCE DATA

SREF = 2690.0000 SQ.FT. XMRP = 1076.6800 IN. XO
LREF = 474.8000 IN. YMRP = .0000 IN. YO
BREF = 936.0680 IN. ZMRP = 375.0000 IN. ZO
SCALE = .0300

PARAMETRIC DATA

RUDDER = -10.000 SPDBRK = .000
BDFLAP = -11.700 L-ELVN = 10.000
R-ELVN = -10.000 MACH = .900

ALPHA ( 1) = -4.051 BETA ( 1) = -3.840 MACH = .89997 Q = 600.24 P = 1058.8 RN/L = 3.5827

SECTION ( 1)BODY FLAP LOWER DEPENDENT VARIABLE CP

| X/LB | 1.0180 | 1.0460 |
|---|---|---|
| PHI | | |
| .000 | -.4443 | -.3155 |
| 40.000 | -.3430 | -.2816 |

ALPHA ( 1) = -4.055 BETA ( 2) = .202 MACH = .89997 Q = 600.24 P = 1058.8 RN/L = 3.5827

SECTION ( 1)BODY FLAP LOWER DEPENDENT VARIABLE CP

| X/LB | 1.0180 | 1.0460 |
|---|---|---|
| PHI | | |
| .000 | -.4313 | -.3084 |
| 40.000 | -.3282 | -.2487 |

ALPHA ( 1) = -4.070 BETA ( 3) = 4.293 MACH = .89997 Q = 600.24 P = 1058.8 RN/L = 3.5827

SECTION ( 1)BODY FLAP LOWER DEPENDENT VARIABLE CP

| X/LB | 1.0180 | 1.0460 |
|---|---|---|
| PHI | | |
| .000 | -.4473 | -.3055 |
| 40.000 | -.3265 | -.2164 |

ALPHA ( 2) = .045 BETA ( 1) = -3.859 MACH = .89957 Q = 599.75 P = 1058.8 RN/L = 3.5771

SECTION ( 1)BODY FLAP LOWER DEPENDENT VARIABLE CP

| X/LB | 1.0180 | 1.0460 |
|---|---|---|
| PHI | | |
| .000 | -.4408 | -.3236 |
| 40.000 | -.3429 | -.2854 |

AMES 11-073(OA148) -140A/B/C ORB BODY FLAP LWR (XE8G79)

ALPHA ( 2) = .042 BETA ( 2) = .192 MACH = .89957 Q = 599.75 P = 1058.8 RN/L = 3.5771

SECTION ( 1)BODY FLAP LOWER DEPENDENT VARIABLE CP

| X/LB | 1.0180 | 1.0460 |
|---|---|---|
| PHI | | |
| .000 | -.4382 | -.3236 |
| 40.000 | -.3167 | -.2394 |

ALPHA ( 2) = .032 BETA ( 3) = 4.260 MACH = .89957 Q = 599.75 P = 1058.8 RN/L = 3.5771

SECTION ( 1)BODY FLAP LOWER DEPENDENT VARIABLE CP

| X/LB | 1.0180 | 1.0460 |
|---|---|---|
| PHI | | |
| .000 | -.4790 | -.3562 |
| 40.000 | -.3454 | -.2156 |

ALPHA ( 3) = 4.023 BETA ( 1) = -3.861 MACH = .90070 Q = 600.44 P = 1057.3 RN/L = 3.5793

SECTION ( 1)BODY FLAP LOWER DEPENDENT VARIABLE CP

| X/LB | 1.0180 | 1.0460 |
|---|---|---|
| PHI | | |
| .000 | -.4569 | -.3224 |
| 40.000 | -.3595 | -.2663 |

ALPHA ( 3) = 4.017 BETA ( 2) = .197 MACH = .90070 Q = 600.44 P = 1057.3 RN/L = 3.5793

SECTION ( 1)BODY FLAP LOWER DEPENDENT VARIABLE CP

| X/LB | 1.0180 | 1.0460 |
|---|---|---|
| PHI | | |
| .000 | -.4485 | -.3185 |
| 40.000 | -.3190 | -.2168 |

ALPHA ( 3) = 4.017 BETA ( 3) = 4.251 MACH = .90070 Q = 600.44 P = 1057.3 RN/L = 3.5793

SECTION ( 1)BODY FLAP LOWER DEPENDENT VARIABLE CP

| X/LB | 1.0180 | 1.0460 |
|---|---|---|
| PHI | | |
| .000 | -.4871 | -.3320 |
| 40.000 | -.3506 | -.1981 |

AMES 11-073(OA148) -140A/B/C ORB BODY FLAP LWR (XE8G79)

ALPHA ( 4) = 7.937 BETA ( 1) = -3.857 MACH = .90017 Q = 600.17 P = 1058.1 RN/L = 3.5825

SECTION ( 1)BODY FLAP LOWER DEPENDENT VARIABLE CP

| X/LB | 1.0180 | 1.0460 |
|---|---|---|
| PHI | | |
| .000 | -.4933 | -.3445 |
| 40.000 | -.3889 | -.2429 |

ALPHA ( 4) = 7.934 BETA ( 2) = .192 MACH = .90017 Q = 600.17 P = 1058.1 RN/L = 3.5825

SECTION ( 1)BODY FLAP LOWER DEPENDENT VARIABLE CP

| X/LB | 1.0180 | 1.0460 |
|---|---|---|
| PHI | | |
| .000 | -.4868 | -.3458 |
| 40.000 | -.3843 | -.2045 |

ALPHA ( 4) = 7.926 BETA ( 3) = 4.250 MACH = .90017 Q = 600.17 P = 1058.1 RN/L = 3.5825

SECTION ( 1)BODY FLAP LOWER DEPENDENT VARIABLE CP

| X/LB | 1.0180 | 1.0460 |
|---|---|---|
| PHI | | |
| .000 | -.5069 | -.3875 |
| 40.000 | -.3830 | -.1945 |

ALPHA ( 5) = 11.959 BETA ( 1) = -3.847 MACH = .89890 Q = 599.14 P = 1059.2 RN/L = 3.5759

SECTION ( 1)BODY FLAP LOWER DEPENDENT VARIABLE CP

| X/LB | 1.0180 | 1.0460 |
|---|---|---|
| PHI | | |
| .000 | -.5189 | -.4030 |
| 40.000 | -.4839 | -.2632 |

ALPHA ( 5) = 11.975 BETA ( 2) = .196 MACH = .89890 Q = 599.14 P = 1059.2 RN/L = 3.5760

SECTION ( 1)BODY FLAP LOWER DEPENDENT VARIABLE CP

| X/LB | 1.0180 | 1.0460 |
|---|---|---|
| PHI | | |
| .000 | -.5048 | -.4099 |
| 40.000 | -.4692 | -.2242 |

AMES 11-073(OA148) -140A/B/C ORB BODY FLAP LWR (XE8G79)

ALPHA ( 5) = 11.956 BETA ( 3) = 4.265 MACH = .89890 Q = 599.14 P = 1059.2 RN/L = 3.5769

SECTION ( 1)BODY FLAP LOWER DEPENDENT VARIABLE CP

| X/LB | 1.0180 | 1.0460 |
|---|---|---|
| PHI | | |
| .000 | -.5624 | -.4299 |
| 40.000 | -.4911 | -.2389 |

ORIGINAL PAGE IS
OF POOR QUALITY

AMES 11-073(OA148) -140A/B/C ORB BODY FLAP LWR (X58030) ( 05 AUG 75 )

REFERENCE DATA

SREF = 2690.0000 SQ.FT. XMRP = 1076.6800 IN. XO
LREF = 474.8000 IN. YMRP = .0000 IN. YO
BREF = 935.0860 IN. ZMRP = 375.0000 IN. ZO
SCALE = .0300

PARAMETRIC DATA

RUDDER = -10.000 SPDBRK = .000
BDFLAP = -11.700 L-ELVN = 10.000
R-ELVN = -10.000 MACH = .600

ALPHA ( 1) = -4.078 BETA ( 1) = -7.858 MACH = .59728 Q = 595.86 P = 2386.0 RN/L = 4.8298

SECTION ( 1)BODY FLAP LOWER DEPENDENT VARIABLE CP

| X/LB | 1.0180 | 1.0460 |
|---|---|---|
| PHI | | |
| .000 | -.3699 | -.2651 |
| 40.000 | -.3248 | -.3386 |

ALPHA ( 1) = -4.082 BETA ( 2) = -3.836 MACH = .59728 Q = 595.86 P = 2386.0 RN/L = 4.8298

SECTION ( 1)BODY FLAP LOWER DEPENDENT VARIABLE CP

| X/LB | 1.0180 | 1.0460 |
|---|---|---|
| PHI | | |
| .000 | -.3593 | -.2502 |
| 40.000 | -.2938 | -.2737 |

ALPHA ( 1) = -4.081 BETA ( 3) = .183 MACH = .59728 Q = 595.86 P = 2386.0 RN/L = 4.8298

SECTION ( 1)BODY FLAP LOWER DEPENDENT VARIABLE CP

| X/LB | 1.0180 | 1.0460 |
|---|---|---|
| PHI | | |
| .000 | -.3865 | -.2513 |
| 40.000 | -.2972 | -.2307 |

ALPHA ( 1) = -3.987 BETA ( 4) = 4.258 MACH = .59728 Q = 595.86 P = 2386.0 RN/L = 4.8298

SECTION ( 1)BODY FLAP LOWER DEPENDENT VARIABLE CP

| X/LB | 1.0180 | 1.0460 |
|---|---|---|
| PHI | | |
| .000 | -.3588 | -.2499 |
| 40.000 | -.2534 | -.2005 |

AMES 11-073(OA148) -140A/B/C ORB BODY FLAP LWR (XE8GBD)

ALPHA ( 1) = -3.995 BETA ( 5) = 8.327 MACH = .59728 Q = 595.86 P = 2386.0 RN/L = 4.8298

SECTION ( 1)BODY FLAP LOWER DEPENDENT VARIABLE CP

| X/LB | 1.0180 | 1.0460 |
|---|---|---|
| PHI | | |
| .000 | -.3595 | -.2491 |
| 40.000 | -.2317 | -.1772 |

ALPHA ( 2) = -.053 BETA ( 1) = -7.896 MACH = .59646 Q = 594.33 P = 2386.5 RN/L = 4.8222

SECTION ( 1)BODY FLAP LOWER DEPENDENT VARIABLE CP

| X/LB | 1.0180 | 1.0460 |
|---|---|---|
| PHI | | |
| .000 | -.3765 | -.2599 |
| 40.000 | -.3208 | -.3297 |

ALPHA ( 2) = -.008 BETA ( 2) = -3.854 MACH = .59546 Q = 594.33 P = 2385.5 RN/L = 4.8222

SECTION ( 1)BODY FLAP LOWER DEPENDENT VARIABLE CP

| X/LB | 1.0180 | 1.0460 |
|---|---|---|
| PHI | | |
| .000 | -.3690 | -.2509 |
| 40.000 | -.2925 | -.2622 |

ALPHA ( 2) = .029 BETA ( 3) = .176 MACH = .59646 Q = 594.33 P = 2386.5 RN/L = 4.8222

SECTION ( 1)BODY FLAP LOWER DEPENDENT VARIABLE CP

| X/LB | 1.0180 | 1.0460 |
|---|---|---|
| PHI | | |
| .000 | -.3758 | -.2532 |
| 40.000 | -.2835 | -.2219 |

ALPHA ( 2) = .052 BETA ( 4) = 4.239 MACH = .59646 Q = 594.33 P = 2386.5 RN/L = 4.8222

SECTION ( 1)BODY FLAP LOWER DEPENDENT VARIABLE CP

| X/LB | 1.0180 | 1.0460 |
|---|---|---|
| PHI | | |
| .000 | -.3672 | -.2496 |
| 40.000 | -.2512 | -.1973 |

AMES 11-073(OA148) -140A/B/C ORB BODY FLAP LWR (XES380)

ALPHA ( 2) = .008 BETA ( 5) = 8.284 MACH = .59648 Q = 594.33 P = 2386.5 RN/L = 4.8222

SECTION ( 1)BODY FLAP LOWER DEPENDENT VARIABLE CP

| X/LB | 1.0180 | 1.0460 |
|---|---|---|
| PHI | | |
| .000 | -.3550 | -.2498 |
| 40.000 | -.2331 | -.1730 |

ALPHA ( 3) = 3.933 BETA ( 1) = -7.902 MACH = .59628 Q = 593.97 P = 2386.5 RN/L = 4.8207

SECTION ( 1)BODY FLAP LOWER DEPENDENT VARIABLE CP

| X/LB | 1.0180 | 1.0460 |
|---|---|---|
| PHI | | |
| .000 | -.3845 | -.2541 |
| 40.000 | -.3113 | -.3231 |

ALPHA ( 3) = 3.907 BETA ( 2) = -3.866 MACH = .59628 Q = 593.97 P = 2386.5 RN/L = 4.8207

SECTION ( 1)BODY FLAP LOWER DEPENDENT VARIABLE CP

| X/LB | 1.0180 | 1.0460 |
|---|---|---|
| PHI | | |
| .000 | -.3769 | -.2542 |
| 40.000 | -.2976 | -.2525 |

ALPHA ( 3) = 3.984 BETA ( 3) = .180 MACH = .59628 Q = 593.97 P = 2386.5 RN/L = 4.8207

SECTION ( 1)BODY FLAP LOWER DEPENDENT VARIABLE CP

| X/LB | 1.0180 | 1.0460 |
|---|---|---|
| PHI | | |
| .000 | -.3694 | -.2467 |
| 40.000 | -.2743 | -.2117 |

ALPHA ( 3) = 3.998 BETA ( 4) = 4.225 MACH = .59628 Q = 593.97 P = 2386.5 RN/L = 4.8207

SECTION ( 1 BODY FLAP LOWER DEPENDENT VARIABLE CP

| X/LB | 1.0180 | 1.0460 |
|---|---|---|
| PHI | | |
| .000 | -.3712 | -.2470 |
| 40.000 | -.2477 | -.1863 |

AMES 11-073(OA148) -140A/B/C ORB BODY FLAP LWR (XE8G80)

ALPHA ( 3) = 4.029 BETA ( 5) = 8.276 MACH = .59628 Q = 593.97 P = 2386.5 RN/L = 4.8207

SECTION ( 1)BODY FLAP LOWER DEPENDENT VARIABLE CP

| X/LB | 1.0180 | 1.0460 |
|---|---|---|
| PHI | | |
| .000 | -.3708 | -.2410 |
| 40.000 | -.2315 | -.1624 |

ALPHA ( 4) = 7.903 BETA ( 1) = -7.896 MACH = .59626 Q = 593.85 P = 2386.1 RN/L = 4.8197

SECTION ( 1)BODY FLAP LOWER DEPENDENT VARIABLE CP

| X/LB | 1.0180 | 1.0460 |
|---|---|---|
| PHI | | |
| .000 | -.3758 | -.2417 |
| 40.000 | -.2999 | -.2874 |

ALPHA ( 4) = 7.912 BETA ( 2) = -3.851 MACH = .59626 Q = 593.85 P = 2386.1 RN/L = 4.8197

SECTION ( 1)BODY FLAP LOWER DEPENDENT VARIABLE CP

| X/LB | 1.0180 | 1.0460 |
|---|---|---|
| PHI | | |
| .000 | -.3693 | -.2372 |
| 40.000 | -.2808 | -.2249 |

ALPHA ( 4) = 8.059 BETA ( 3) = .184 MACH = .59626 Q = 593.85 P = 2386.1 RN/L = 4.8197

SECTION ( 1)BODY FLAP LOWER DEPENDENT VARIABLE CP

| X/LB | 1.0180 | 1.0460 |
|---|---|---|
| PHI | | |
| .000 | -.3702 | -.2404 |
| 40.000 | -.2673 | -.1972 |

ALPHA ( 4) = 8.016 BETA ( 4) = 4.233 MACH = .59626 Q = 593.85 P = 2386.1 RN/L = 4.8197

SECTION ( 1)BODY FLAP LOWER DEPENDENT VARIABLE CP

| X/LB | 1.0180 | 1.0460 |
|---|---|---|
| PHI | | |
| .000 | -.3767 | -.2497 |
| 40.000 | -.2365 | -.1743 |

AMES 11-073(OA148) -140A/B/C ORB BODY FLAP LWR [illegible]

ALPHA ( 4) = 8.043 BETA ( 5) = 8.283 MACH = .59626 Q = 593.85 P = 2385.1 RN/L = 4.8197

SECTION ( 1)BODY FLAP LOWER DEPENDENT VARIABLE CP

| X/LB | 1.0180 | 1.0460 |
|---|---|---|
| PHI | | |
| .000 | -.3717 | -.2439 |
| 40.000 | -.2307 | -.1553 |

ALPHA ( 5) = 11.974 BETA ( 1) = -7.860 MACH = .59650 Q = 594.19 P = 2385.7 RN/L = 4.8150

SECTION ( 1)BODY FLAP LOWER DEPENDENT VARIABLE CP

| X/LB | 1.0180 | 1.0460 |
|---|---|---|
| PHI | | |
| .000 | -.3720 | -.2333 |
| 40.000 | -.2938 | -.2530 |

ALPHA ( 5) = 11.983 BETA ( 2) = -3.842 MACH = .59650 Q = 594.19 P = 2385.7 RN/L = 4.8199

SECTION ( 1)BODY FLAP LOWER DEPENDENT VARIABLE CP

| X/LB | 1.0180 | 1.0460 |
|---|---|---|
| PHI | | |
| .000 | -.3616 | -.2331 |
| 40.000 | -.2629 | -.2068 |

ALPHA ( 5) = 12.035 BETA ( 3) = .179 MACH = .59650 Q = 594.19 P = 2385.7 RN/L = 4.8199

SECTION ( 1)BODY FLAP LOWER DEPENDENT VARIABLE CP

| X/LB | 1.0180 | 1.0460 |
|---|---|---|
| PHI | | |
| .000 | -.3619 | -.2352 |
| 40.000 | -.2376 | -.1723 |

ALPHA ( 5) = 12.027 BETA ( 4) = 4.242 MACH = .59650 Q = 594.19 P = 2385.7 RN/L = 4.8199

SECTION ( 1)BODY FLAP LOWER DEPENDENT VARIABLE CP

| X/LB | 1.0180 | 1.0460 |
|---|---|---|
| PHI | | |
| .000 | -.3645 | -.2327 |
| 40.000 | -.2220 | -.1454 |

AMES 11-073(OA148) -140A/B/C ORB BODY FLAP LWR (XE8380)

ALPHA ( 5) = 12.061 BETA ( 5) = 8.297 MACH = .59850 Q = 5[illegible].19 P = 2395.7 RN/L = 4.8199

SECTION ( 1)BODY FLAP LOWER DEPENDENT VARIABLE CP

| X/LB | 1.0180 | 1.0460 |
|---|---|---|
| PHI | | |
| .000 | -.3451 | -.2333 |
| 40.000 | -.1974 | -.1344 |

AMES 11-073(OA148) -140A/B/C ORB BODY FLAP LWR (XE6081) ( 05 AUG 75 )

REFERENCE DATA

SREF = 2690.0000 SQ.FT. XMRP = 1076.6800 IN. XO
LREF = 474.8000 IN. YMRP = .0000 IN. YO
BREF = 936.0680 IN. ZMRP = 375.0000 IN. ZO
SCALE = .0300

PARAMETRIC DATA

RUDDER = 10.000 SPDBRK = .000
BDFLAP = -11.700 L-ELVN = -10.000
R-ELVN = 10.000 MACH = 1.400

ALPHA ( 1) = -3.955 BETA ( 1) = .178 MACH = 1.3929 Q = 599.69 P = 441.59 RN/L = 2.9281

SECTION ( 1)BODY FLAP LOWER DEPENDENT VARIABLE CP

| X/LB | 1.0180 | 1.0460 |
|---|---|---|
| PHI | | |
| .000 | -.4472 | -.4600 |
| 40.000 | -.4614 | -.3658 |

ALPHA ( 2) = .028 BETA ( 1) = .177 MACH = 1.3894 Q = 599.62 P = 443.71 RN/L = 2.9315

SECTION ( 1)BODY FLAP LOWER DEPENDENT VARIABLE CP

| X/LB | 1.0180 | 1.0460 |
|---|---|---|
| PHI | | |
| .000 | -.4171 | -.4309 |
| 40.000 | -.4344 | -.3360 |

ALPHA ( 3) = 3.945 BETA ( 1) = -3.872 MACH = 1.3917 Q = 599.67 P = 442.30 RN/L = 2.9226

SECTION ( 1)BODY FLAP LOWER DEPENDENT VARIABLE CP

| X/LB | 1.0180 | 1.0460 |
|---|---|---|
| PHI | | |
| .000 | -.3848 | -.4000 |
| 40.000 | -.4313 | -.3288 |

ALPHA ( 3) = 3.983 BETA ( 2) = .185 MACH = 1.3917 Q = 599.67 P = 442.30 RN/L = 2.9226

SECTION ( 1)BODY FLAP LOWER DEPENDENT VARIABLE CP

| X/LB | 1.0180 | 1.0460 |
|---|---|---|
| PHI | | |
| .000 | -.3777 | -.3922 |
| 40.000 | -.4093 | -.3082 |

AMES 11-073(OA148) -140A/B/C ORB BODY FLAP LWR (XE8G81)

ALPHA ( 3) = 3.932 BETA ( 3) = 4.246 MACH = 1.3917 Q = 599.67 P = 442.30 RN/L = 2.9226

SECTION ( 1)BODY FLAP LOWER DEPENDENT VARIABLE CP

| X/LB | 1.0180 | 1.0460 |
|---|---|---|
| PHI | | |
| .000 | -.3738 | -.3916 |
| 40.000 | -.3897 | -.2867 |

ALPHA ( 4) = 7.903 BETA ( 1) = .179 MACH = 1.3906 Q = 599.65 P = 443.00 RN/L = 2.9169

SECTION ( 1)BODY FLAP LOWER DEPENDENT VARIABLE CP

| X/LB | 1.0180 | 1.0460 |
|---|---|---|
| PHI | | |
| .000 | -.3478 | -.3616 |
| 40.000 | -.3947 | -.2831 |

ALPHA ( 5) = 11.906 BETA ( 1) = -3.868 MACH = 1.3903 Q = 599.44 P = 443.00 RN/L = 2.9079

SECTION ( 1)BODY FLAP LOWER DEPENDENT VARIABLE CP

| X/LB | 1.0180 | 1.0460 |
|---|---|---|
| PHI | | |
| .000 | -.3259 | -.3384 |
| 40.000 | -.3909 | -.2739 |

ALPHA ( 5) = 11.898 BETA ( 2) = .169 MACH = 1.3903 Q = 599.44 P = 443.00 RN/L = 2.9[illegible]9

SECTION ( 1)BODY FLAP LOWER DEPENDENT VARIABLE CP

| X/LB | 1.0180 | 1.0460 |
|---|---|---|
| PHI | | |
| .000 | -.3187 | -.3349 |
| 40.000 | -.3732 | -.2409 |

ALPHA ( 5) = 11.887 BETA ( 3) = 4.249 MACH = 1.3903 Q = 599.44 P = 443.00 RN/L = 2.9079

SECTION ( 1)BODY FLAP LOWER DEPENDENT VARIABLE CP

| X/LB | 1.0180 | 1.0460 |
|---|---|---|
| PHI | | |
| .000 | -.3196 | -.3409 |
| 40.000 | -.3532 | -.2741 |

AMES 11-073(OA148) -140A/B/C ORB BODY FLAP LWR (XE8G81)

ALPHA ( 6) = 15.870 BETA ( 1) = .160 MACH = 1.3887 Q = 599.91 P = 444.41 RN/L = 2.9065

SECTION ( 1)BODY FLAP LOWER DEPENDENT VARIABLE CP

| X/LB | 1.0180 | 1.0460 |
|---|---|---|
| PHI | | |
| .000 | -.2884 | -.3097 |
| 40.000 | -.3298 | -.3076 |

AMES 11-073(OA148) -140A/B/C ORB BODY FLAP LWR (XE8G82) ( 05 AUG 75 )

REFERENCE DATA

SREF = 2690.0000 SQ.FT. XMRP = 1076.6800 IN. XO
LREF = 474.8000 IN. YMRP = .0000 IN. YO
BREF = 936.0680 IN. ZMRP = 375.0000 IN. ZO
SCALE = .0300

PARAMETRIC DATA

RUDDER = 10.000 SPDBRK = .000
BDFLAP = -11.700 L-ELVN = -10.000
R-ELVN = 10.000 MACH = 1.250

ALPHA ( 1) = -4.001 BETA ( 1) = .172 MACH = 1.2466 Q = 600.03 P = 551.58 RN/L = 3.0277

SECTION ( 1)BODY FLAP LOWER DEPENDENT VARIABLE CP

| X/LB | 1.0180 | 1.0460 |
|---|---|---|
| PHI | | |
| .000 | -.5553 | -.5742 |
| 40.000 | -.5365 | -.4279 |

ALPHA ( 2) = .004 BETA ( 1) = .171 MACH = 1.2457 Q = 599.87 P = 552.28 RN/L = 3.0295

SECTION ( 1)BODY FLAP LOWER DEPENDENT VARIABLE CP

| X/LB | 1.0180 | 1.0460 |
|---|---|---|
| PHI | | |
| .000 | -.5167 | -.5384 |
| 40.000 | -.5021 | -.3962 |

ALPHA ( 3) = 3.910 BETA ( 1) = -3.880 MACH = 1.2454 Q = 599.82 P = 552.51 RN/L = 3.0275

SECTION ( 1)BODY FLAP LOWER DEPENDENT VARIABLE CP

| X/LB | 1.0180 | 1.0460 |
|---|---|---|
| PHI | | |
| .000 | -.4870 | -.5073 |
| 40.000 | -.5114 | -.3762 |

ALPHA ( 3) = 3.950 BETA ( 2) = .192 MACH = 1.2454 Q = 599.82 P = 552.51 RN/L = 3.0275

SECTION ( 1)BODY FLAP LOWER DEPENDENT VARIABLE CP

| X/LB | 1.0180 | 1.0460 |
|---|---|---|
| PHI | | |
| .000 | -.4789 | -.5034 |
| 40.000 | -.4729 | -.3525 |

ORIGINAL PAGE IS OF POOR QUALITY

AMES 11-073(OA148) -140A/B/C ORB BODY FLAP LWR (XEBG82)

ALPHA ( 3) = 3.915 BETA ( 3) = 4.246 MACH = 1.2454 Q = 599.82 P = 552.51 RN/L = 3.0275

SECTION ( 1)BODY FLAP LOWER DEPENDENT VARIABLE CP

| X/LB | 1.0180 | 1.0460 |
|---|---|---|
| PHI | | |
| .000 | -.4761 | -.4998 |
| 40.000 | -.4272 | -.3380 |

ALPHA ( 4) = 7.875 BETA ( 1) = .170 MACH = 1.2457 Q = 599.87 P = 552.28 RN/L = 3.0295

SECTION ( 1)BODY FLAP LOWER DEPENDENT VARIABLE CP

| X/LB | 1.0180 | 1.0460 |
|---|---|---|
| PHI | | |
| .000 | -.4460 | -.4692 |
| 40.000 | -.4349 | -.3168 |

ALPHA ( 5) = 11.893 BETA ( 1) = -3.862 MACH = 1.2456 Q = 600.06 P = 552.51 RN/L = 3.0278

SECTION ( 1)BODY FLAP LOWER DEPENDENT VARIABLE CP

| X/LB | 1.0180 | 1.0460 |
|---|---|---|
| PHI | | |
| .000 | -.4304 | -.4478 |
| 40.000 | -.4556 | -.3128 |

ALPHA ( 5) = 11.948 BETA ( 2) = .178 MACH = 1.2456 Q = 600.06 P = 552.51 RN/L = 3.0278

SECTION ( 1)BODY FLAP LOWER DEPENDENT VARIABLE CP

| X/LB | 1.0180 | 1.0460 |
|---|---|---|
| PHI | | |
| .000 | -.4257 | -.4459 |
| 40.000 | -.4356 | -.2999 |

ALPHA ( 5) = 11.969 BETA ( 3) = 4.251 MACH = 1.2456 Q = 600.06 P = 552.51 RN/L = 3.0278

SECTION ( 1)BODY FLAP LOWER DEPENDENT VARIABLE CP

| X/LB | 1.0180 | 1.0460 |
|---|---|---|
| PHI | | |
| .000 | -.4272 | -.4531 |
| 40.000 | -.4536 | -.3156 |

AMES 11-073(OA148) -140A/B/C ORB BODY FLAP LWR (XE8G83) ( 05 AUG 75 )

REFERENCE DATA

SREF = 2690.0000 SQ.FT. XMRP = 1076.6800 IN. XO
LREF = 474.8000 IN. YMRP = .0000 IN. YO
BREF = 936.0680 IN. ZMRP = 375.0000 IN. ZO
SCALE = .0300

PARAMETRIC DATA

RUDDER = 10.000 SPCBRK = .000
BDFLAP = -11.700 L-ELVN = -10.000
R-ELVN = 10.000 MACH = 1.100

ALPHA ( 1) = -3.943 BETA ( 1) = .171 MACH = 1.0992 Q = 599.30 P = 708.59 RN/L = 3.1942

SECTION ( 1)BODY FLAP LOWER DEPENDENT VARIABLE CP

| X/LB | 1.0180 | 1.0460 |
|---|---|---|
| PHI | | |
| .000 | -.6984 | -.7175 |
| 40.000 | -.5437 | -.4588 |

ALPHA ( 2) = .065 BETA ( 1) = .171 MACH = 1.0980 Q = 599.15 P = 710.01 RN/L = 3.1985

SECTION ( 1)BODY FLAP LOWER DEPENDENT VARIABLE CP

| X/LB | 1.0180 | 1.0460 |
|---|---|---|
| PHI | | |
| .000 | -.6941 | -.7015 |
| 40.000 | -.5337 | -.4449 |

ALPHA ( 3) = 3.859 BETA ( 1) = -3.876 MACH = 1.0981 Q = 598.75 P = 709.30 RN/L = 3.1983

SECTION ( 1)BODY FLAP LOWER DEPENDENT VARIABLE CP

| X/LB | 1.0180 | 1.0460 |
|---|---|---|
| PHI | | |
| .000 | -.6667 | -.5870 |
| 40.000 | -.5488 | -.4499 |

ALPHA ( 3) = 3.908 BETA ( 2) = .189 MACH = 1.0981 Q = 598.75 P = 709.30 RN/L = 3.1983

SECTION ( 1)BODY FLAP LOWER DEPENDENT VARIABLE CP

| X/LB | 1.0180 | 1.0460 |
|---|---|---|
| PHI | | |
| .000 | -.6521 | -.6731 |
| 40.000 | -.5190 | -.4178 |

AMES 11-073(OA148) -140A/B/C ORB BODY FLAP LWR (XE8G83)

ALPHA ( 3) = 3.913 BETA ( 3) = 4.243 MACH = 1.0981 Q = 598.75 P = 709.30 RN/L = 3.1983

SECTION ( 1)BODY FLAP LOWER DEPENDENT VARIABLE CP

| X/LB | 1.0180 | 1.0460 |
|---|---|---|
| PHI | | |
| .000 | -.6561 | -.6513 |
| 40.000 | -.5186 | -.4274 |

ALPHA ( 4) = 8.023 BETA ( 1) = .173 MACH = 1.0972 Q = 598.87 P = 710.71 RN/L = 3.1996

SECTION ( 1)BODY FLAP LOWER DEPENDENT VARIABLE CP

| X/LB | 1.0180 | 1.0460 |
|---|---|---|
| PHI | | |
| .000 | -.6287 | -.6497 |
| 40.000 | -.5177 | -.3997 |

ALPHA ( 5) = 11.896 BETA ( 1) = -3.856 MACH = 1.0968 Q = 598.64 P = 710.95 RN/L = 3.1978

SECTION ( 1)BODY FLAP LOWER DEPENDENT VARIABLE CP

| X/LB | 1.0180 | 1.0460 |
|---|---|---|
| PHI | | |
| .000 | -.6094 | -.6295 |
| 40.000 | -.5358 | -.4046 |

ALPHA ( 5) = 11.964 BETA ( 2) = .179 MACH = 1.0968 Q = 598.64 P = 710.95 RN/L = 3.1978

SECTION ( 1)BODY FLAP LOWER DEPENDENT VARIABLE CP

| X/LB | 1.0180 | 1.0460 |
|---|---|---|
| PHI | | |
| .000 | -.6028 | -.6251 |
| 40.000 | -.5126 | -.3911 |

ALPHA ( 5) = 11.963 BETA ( 3) = 4.251 MACH = 1.0968 Q = 598.64 P = 710.95 RN/L = 3.1978

SECTION ( 1)BODY FLAP LOWER DEPENDENT VARIABLE CP

| X/LB | 1.0180 | 1.0460 |
|---|---|---|
| PHI | | |
| .000 | -.6005 | -.6200 |
| 40.000 | -.5485 | -.4070 |

AMES 11-073(OA148) -140A/B/C ORB BODY FLAP LWR (XE8G84) ( 05 AUG 75 )

REFERENCE DATA

SREF = 2690.0000 SQ.FT. XMRP = 1076.6800 IN. XO
LREF = 474.8000 IN. YMRP = .0000 IN. YO
BREF = 936.0000 IN. ZMRP = 375.0000 IN. ZO
SCALE = .0300

PARAMETRIC DATA

RUDDER = 10.000 SPDBRK = .000
BDFLAP = -11.700 L-ELVN = -10.000
R-ELVN = 10.000 MACH = .900

ALPHA ( 1) = -3.965 BETA ( 1) = .165 MACH = .89930 Q = 599.63 P = 1059.2 RN/L = 3.5885

SECTION ( 1)BODY FLAP LOWER DEPENDENT VARIABLE CP

| X/LB | 1.0180 | 1.0460 |
|---|---|---|
| PHI | | |
| .000 | -.4571 | -.3295 |
| 40.000 | -.3545 | -.2494 |

ALPHA ( 2) = .057 BETA ( 1) = .165 MACH = .89770 Q = 598.28 P = 1060.7 RN/L = 3.5863

SECTION ( 1)BODY FLAP LOWER DEPENDENT VARIABLE CP

| X/LB | 1.0180 | 1.0460 |
|---|---|---|
| PHI | | |
| .000 | -.4491 | -.3264 |
| 40.000 | -.3520 | -.2621 |

ALPHA ( 3) = 3.889 BETA ( 1) = -3.885 MACH = .89803 Q = 598.38 P = 1060.0 RN/L = 3.5814

SECTION ( 1)BODY FLAP LOWER DEPENDENT VARIABLE CP

| X/LB | 1.0180 | 1.0460 |
|---|---|---|
| PHI | | |
| .000 | -.5030 | -.3557 |
| 40.000 | -.4161 | -.2723 |

ALPHA ( 3) = 4.092 BETA ( 2) = .164 MACH = .89803 Q = 598.38 P = 1060.0 RN/L = 3.5814

SECTION ( 1)BODY FLAP LOWER DEPENDENT VARIABLE CP

| X/LB | 1.0180 | 1.0460 |
|---|---|---|
| PHI | | |
| .000 | -.4655 | -.3427 |
| 40.000 | -.3704 | -.2569 |

AMES 11-073(OA148) -140A/B/C ORB BODY FLAP LWR (XEBGB4)

ALPHA ( 3) = 3.996 BETA ( 3) = 4.248 MACH = .89803 Q = 598.38 P = 1060.0 RN/L = 3.5814

SECTION ( 1)BODY FLAP LOWER DEPENDENT VARIABLE CP

| X/LB | 1.0180 | 1.0460 |
|---|---|---|
| PHI | | |
| .000 | -.4585 | -.3247 |
| 40.000 | -.3336 | -.2301 |

ALPHA ( 4) = 8.008 BETA ( 1) = .163 MACH = .89820 Q = 598.16 P = 1059.3 RN/L = 3.5792

SECTION ( 1)BODY FLAP LOWER DEPENDENT VARIABLE CP

| X/LB | 1.0180 | 1.0460 |
|---|---|---|
| PHI | | |
| .000 | -.5079 | -.3803 |
| 40.000 | -.3812 | -.2613 |

ALPHA ( 5) = 11.969 BETA ( 1) = .169 MACH = .870 Q = 597.36 P = 1061.4 RN/L = 3.5769

SECTION ( 1)BODY FLAP LOWER DEPENDENT VARIABLE CP

| X/LB | 1.0180 | 1.0460 |
|---|---|---|
| PHI | | |
| .000 | -.5915 | -.4190 |
| 40.000 | -.4452 | -.2696 |

AMES 11-073(OA148) -140A/B/C ORB BODY FLAP LWR (XE8G85) ( 05 AUG 75 )

REFERENCE DATA

SREF = 2690.0000 SQ.FT. XMRP = 1076.6800 IN. XO
LREF = 474.8000 IN. YMRP = .0000 IN. YO
BREF = 936.0680 IN. ZMRP = 375.0000 IN. ZO
SCALE = .0300

PARAMETRIC DATA

RUDDER = 10.000 SPDBRK = .000
BDFLAP = -11.700 L-ELVN = -10.000
R-ELVN = 10.000 MACH = .600

ALPHA ( 1) = -3.903 BETA ( 1) = .164 MACH = .59620 Q = 593.85 P = 2386.4 RN/L = 4.8166

SECTION ( 1)BODY FLAP LOWER DEPENDENT VARIABLE CP

| X/LB | 1.0180 | 1.0460 |
|---|---|---|
| PHI | | |
| .000 | -.3710 | -.2580 |
| 40.000 | -.2896 | -.2020 |

ALPHA ( 2) = .072 BETA ( 1) = .163 MACH = .59620 Q = 593.87 P = 2387.1 RN/L = 4.8288

SECTION ( 1)BODY FLAP LOWER DEPENDENT VARIABLE CP

| X/LB | 1.0180 | 1.0460 |
|---|---|---|
| PHI | | |
| .000 | -.3769 | -.2622 |
| 40.000 | -.2965 | -.2008 |

ALPHA ( 3) = 4.077 BETA ( 1) = .160 MACH = .59680 Q = 595.04 P = 2386.4 RN/L = 4.8327

SECTION ( 1)BODY FLAP LOWER DEPENDENT VARIABLE CP

| X/LB | 1.0180 | 1.0460 |
|---|---|---|
| PHI | | |
| .000 | -.3900 | -.2623 |
| 40.000 | -.3004 | -.1961 |

ALPHA ( 4) = 8.047 BETA ( 1) = .158 MACH = .59710 Q = 595.63 P = 2386.4 RN/L = 4.8284

SECTION ( 1)BODY FLAP LOWER DEPENDENT VARIABLE CP

| X/LB | 1.0180 | 1.0460 |
|---|---|---|
| PHI | | |
| .000 | -.3853 | -.2535 |
| 40.000 | -.2917 | -.1859 |

AMES 11-073(OA148) -140A/B/C ORB BODY FLAP LWR (XE8G85)

ALPHA ( 5) = 12.046 BETA ( 1) = .156 MACH = .59710 Q = 595.63 P = 2386.4 RN/L = 4.8340

SECTION ( 1)BODY FLAP LOWER DEPENDENT VARIABLE CP

| X/LB | 1.0160 | 1.0460 |
|---|---|---|
| PHI | | |
| .000 | -.3729 | -.2408 |
| 40.000 | -.2709 | -.1664 |