General Disclaimer

One or more of the Following Statements may affect this Document

- This document has been reproduced from the best copy furnished by the organizational source. It is being released in the interest of making available as much information as possible.

- This document may contain data, which exceeds the sheet parameters. It was furnished in this condition by the organizational source and is the best copy available.

- This document may contain tone-on-tone or color graphs, charts and/or pictures, which have been reproduced in black and white.

- This document is paginated as submitted by the original source.

- Portions of this document are not fully legible due to the historical nature of some of the material. However, it is the best reproduction available from the original submission.

Produced by the NASA Center for Aerospace Information (CASI)

SEPTEMBER 19

ONBOARD EXPERIMENT DATA SUPPORT FACILITY

NASA CR-
151034

FINAL REPORT

(NASA-CR-151034) ONBOARD EXPERIMENT DATA SUPPORT FACILITY Final Report (General Electric Co.) 308 p HC A14/MF A01 CSCL 14B

N77-10144

Unclas
G3/19 07993

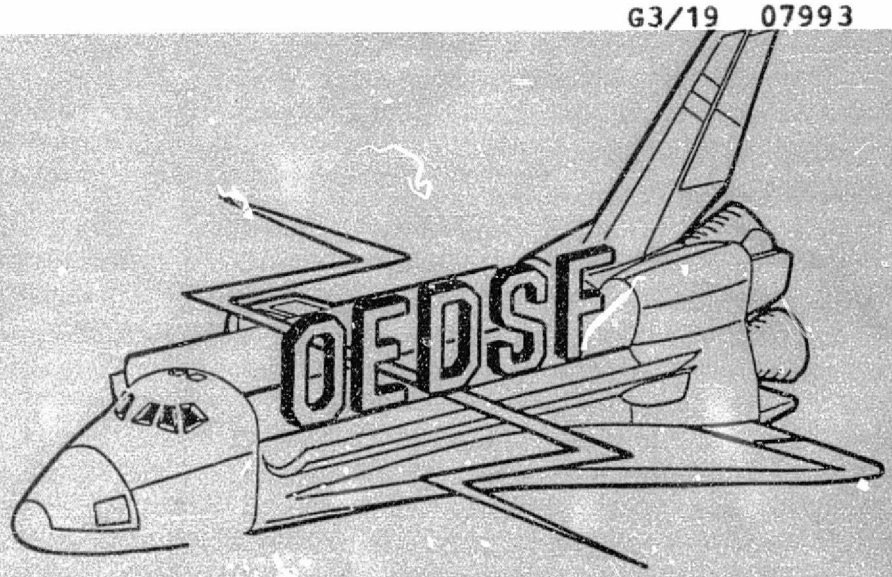

Contract NAS 9-14651

NOV 1976
RECEIVED
NASA STI FACILITY
INPUT BRANCH

GENERAL ELECTRIC

September 1976

Contract NAS9-14651
DRL No. T-1122 (MA-463TA)

ONBOARD EXPERIMENT DATA SUPPORT FACILITY

Prepared for the
National Aeronautics and Space Administration
Johnson Space Center
Houston, Texas

Prepared by

GENERAL ELECTRIC

SPACE DIVISION
VALLEY FORGE SPACE CENTER
P.O. BOX 8555
PHILADELPHIA PA. 19101

TABLE OF CONTENTS

Section		Page
1	INTRODUCTION AND SUMMARY	1-1
	CONCLUSIONS	1-7
	REPORT ORGANIZATION	1-7
2	STUDY METHODOLOGY	2-1
3	BOUNDARY SENSORS SELECTION	3-1
4	PROCESSING REQUIREMENTS OF THE BOUNDARY SENSORS	4-1
	4.1 Onboard Processing Requirements	4-1
	4.2 OEDSF Requirements	4-7
	4.3 OEDSF Ground System Requirements	4-9
5	COMPOSITE SENSORS	5-1
6	ARCHITECTURE OF THE OEDSF	6-1
	6.1 OEDSF Architecture Drivers	6-7
	6.2 Programming Technique	6-23
7	DESIGN CONCEPTS	7-1
	7.1 Overview	7-1
	7.2 Central Processing Unit	7-9
	7.2.1 Arithmetic Processing Element	7-11
	7.2.2 Trigonometric Processing Element	7-14
	7.2.3 Exponential/Logarithmic Processing Element	7-14
	7.2.4 Design Selection Criteria	7-15
	7.2.5 Processing Element Design	7-17
	7.3 Memory Structure	7-28
	7.4 Input/Output Structure	7-33
	7.5 Bus and Control Structure	7-37
	7.6 Convention Analyses	7-42

TABLE OF CONTENTS (Continued)

Section		Page
	7.7 Mechanical Concept	7-43
	7.7.1 OEDSF Packaging Concept	7-47
	7.7.2 Preliminary Thermal Analysis	7-53
8	INDEX GENERATING PROGRAM	8-1
9	EFFECTIVENESS OF THE OEDSF	9-1
	9.1 Operational Advantages	9-1
	9.2 Cost Analyses	9-6
	9.2.1 OEDSF Cost Elements	9-7
	9.2.2 Cost Comparisons	9-11
	9.2.3 Extrapolation to Full Payloads	9-30
	9.2.4 TDRS Link Cost Considerations	9-30
	9.3 Level IV/V Integration	9-31
10	RELIABILITY, QUALITY ASSURANCE, AND SAFETY	10-1
11	IMPLEMENTATION PLAN	11-1
	WORK PACKAGE DESCRIPTION FOR COSTING	11-6
Appendix		
A	TECHNOLOGY FORECAST	A-1
B	BENCHMARK PROGRAMS	B-1
C	POLYNOMIAL SOLUTIONS IN NUMERICAL ANALYSIS	C-1
D	OEDSF CONCEPTUAL DESIGN SUMMARY	D-1

LIST OF ILLUSTRATIONS

Figure		Page
1-1	The OEDSF Concept	1-2
1-2	Cost of Centralized OEDSF vs. Dedicated Processors	1-4
1-3	OEDSF Mechanical Packaging	1-5
1-4	Study Flow Plan	1-6
1-5	OEDSF Study Objectives	1-6
2-1	Study Flow Plan	2-1
2-2	Task 1 Summary	2-2
2-3	Task 2 Summary	2-3
2-4	Task 3 Summary	2-3
3-1	Representativeness	3-7
3-2	Advanced Technology Scanner	3-8
3-3	Infrared Spectrometer Data Processing Flow Diagram	3-8
3-4	Radiometer/Scatterometer Data Processing Flow Diagram	3-9
3-5	CIMATS Data Processing Flow Diagram	3-9
3-6	Electron Accelerator Data Processing Flow Diagram	3-10
3-7	Optical Band Imager and Photometer System Data Processing Flow Diagram	3-10
4-1	Processing Requirements (Typical Example)	4-2
4-2	Functional Flow Diagrams (Typical Example)	4-2
4-3	On-Board/Ground Partitions	4-10
4-4	ATS Data System	4-11
4-5	IRS Data System	4-12
4-6	RADSCAT Data System	4-13
4-7	CIMATS Data System	4-13
5-1	Composite Sensor Derivation	5-1
6-1	Augmented Computer Architecture	6-2
6-2	Pipeline Architecture	6-3
6-3	Serial Architecture	6-4
6-4	Array Architecture	6-5
6-5	Centralized Architecture	6-6

LIST OF ILLUSTRATIONS (Continued)

Figure		Page
6-6	Distributed Architecture	6-6
6-7	Structured Architecture	6-6
6-8	Potential Array Structures	6-10
6-9	Array Structure	6-11
6-10	CIMATS Data Processing	6-15
6-11a	CIMATS Sub Limb Measurement Lat. and Long.	6-17
6-11b	CIMATS Non-Thermal	6-19
6-11c	CIMATS Thermal Bands	6-21
6-12	CIMATS Flow Chart for Array Processor	6-23
6-13	Parameter Definition	6-24
6-14	CIMATS Prime Port Utilization	6-24
6-15	Port Assignment	6-25
6-16	Processing Element Port Designation	6-25
6-17	Program Format	6-26
6-18	CIMATS Data Processing Program for 5x5 Array Processor	6-29
7-1	The OEDSF Concept	7-2
7-2	Basic OEDSF Array Processor	7-3
7-3	Polynomial Subroutine	7-7
7-4	Polynomial Functional Diagram	7-8
7-5	Firmware Implementation	7-9
7-6	5 x 5 Matrix CPU	7-14
7-7	Primitive Sensor Distribution	7-11
7-8	Required Frequency in OPS/SEC	7-12
7-9	Arithmetic Element Hardware/Software Trade-Offs	7-14
7-10	Arithmetic Level of Decomposition Effects	7-14
7-11	Trigonometric Element Hardware/Software Trade-Off	7-15
7-12	Exponential Element Hardware/Software Trade-Off	7-15
7-13	Exponential Level of Decomposition Effects	7-15
7-14	Arithmetic Element Model Parameters	7-18
7-15	Conceptual Design for Arithmetic Element	7-18
7-16	Scaled Parameters	7-19
7-17	Arithmetic Processing Element	7-19
7-18	Trigonometric Element Model Parameters	7-20

LIST OF ILLUSTRATIONS (Continued)

Figure		Page
7-19	Scaled Parameters	7-20
7-20	Trigonometric Element Conceptual Design	7-20
7-21	Trigonometric Function Generator Block Diagram	7-21
7-22	Exponential Element Model Parameters	7-22
7-23	Scaled Parameters	7-22
7-24	Conceptual Design	7-22
7-25	Exponential Processing Element	7-23
7-26	Spawning Diagrams	7-25
7-27	Number of Paths as a Function of Array Size and Flow Pattern	7-25
7-28	Number of Sensors Processed as a Function of Array Size and Speed	7-26
7-29	Operations/Second	7-27
7-30	Matrix Size Analysis	7-27
7-31	Boundary and Composite Sensors Requirements	7-28
7-32	Analysis Summary	7-31
7-33	Data Base Memory Distribution Architecture	7-32
7-34	Control Memory Distribution Architecture	7-34
7-35	Input/Output Requirements	7-35
7-36	Block Diagram of Sensor Synchronized to OEDSF	7-35
7-37	Block Diagram of OEDSF Synchronized to Sensor	7-35
7-38	Asynchronous Operation	7-35
7-39	Input/Output Structure	7-36
7-40	Micro-Code Partitioning	7-38
7-41	Comparison of Multiplexed and Separate Bus Architecture	7-39
7-42	Functional Block Diagram for Elements With Scratch Pads	7-40
7-43	Functional Block Diagram for Elements without Scratch Pads	7-41
7-44	Sequence of OEDSF Program Loading	7-39
7-45	Machine Precision Analysis	7-43
7-46	Comparison of Fixed and Floating Point Modes	7-43
7-47	Comparison of Binary Conventions	7-44
7-48	Properties of Binary Conventions	7-44
7-49	OEDSF Power Supply	7-45
7-50	Alternate OEDSF Sizing and Configuration	7-46
7-51	OEDSF Packaging Concept	7-48

LIST OF ILLUSTRATIONS (Continued)

Figure		Page
7-52	Array Unit Cooling	7-49
7-53	Alternate Arrangement	7-52
8-1	Index Generation Program Overview	8-1
8-2	OEDSF Software System Flow	8-3
8-3	Sensor Process Language Compiler and Scheduler Software System	8-4
8-4	OASSIM Module Flow Chart	8-12
9-1	Range of Processing Needs	9-4
9-2	Advanced Image Processing System	9-14
9-3	IRS Data Flow	9-19
9-4	IRS Data Processing Sequence	9-20
9-5	EREP Processing Operations	9-21
9-6	S-193 Program	9-23
9-7	CIMATS Data System	9-26
9-8	Central Facility Data Functions - CIMATS	9-27
9-9	User Facility Data Functions - CIMATS	9-27
9-10	IV/V Simulation Requirements	9-31
9-11	User Requirements	9-33
9-12	OEDSF Alternative	9-41
9-13	OEDSF Users Integration Needs	9-42
11-1	Standard Schedule	11-1
11-2	Phased Development Schedule	11-2
11-3	OEDSF Work Breakdown Structure	11-5

LIST OF TABLES

Table		Page
1-1	OEDSF Characteristics	1-2
1-2	Effectiveness Analysis Summary	1-3
2-1	Study Flow Plan	2-1
2-2	Task I Summary	2-2
2-3	Task 2 Summary	2-3
2-4	Task 3 Summary	2-3
3-1	Sample of Sensor Tabulations	3-2
3-2	Boundary Experiments	3-4
4-1	On-Board/Bound Partition Criteria	4-1
4-2	Impact of On-Board/Ground Criteria on Boundary Experiments Processing	4-6
4-3	OEDSF Functions Required	4-8
4-4	Boundary Sensor Characteristics	4-9
5-1	Composite Sensor Characteristics	5-2
5-2	Machine Requirements	5-3
6-1	Augmented Small Computer	6-2
6-2	Pipeline Architecture	6-3
6-3	Serial Architecture	6-4
6-4	Array Architecture	6-5
6-5	OEDSF Architecture Drivers	6-7
6-6	Comparison of Processing Architectures	6-9
6-7	CIMATS Processing Loading of the OEDSF	6-27
7-1	Function Set Summary	7-4
7-2	OEDSF Characteristics	7-5
7-3	Software Modeling Parameters	7-7
7-4	Hardware Modeling Parameters	7-10
7-5	OEDSF Thermal Requirements	7-53
7-6	OEDSF Environments	7-53

LIST OF TABLES (Continued)

Table		Page
9-1	OEDSF Evaluation Factors	9-2
9-2	Cost Comparison Summary For Two Missions	9-6
9-3	Sensor Model for OEDSF Utilization	9-8
9-4	Recommended User Cost Allocation Rates for Shuttle/Spacelab Utilization	9-10
9-5	Cost of Using the OEDSF	9-12
9-6	Cost of Conventional System	9-12
9-7	Data Processing Cost Comparisons as a Function of Total Missions	9-13
9-8	ATS Usage Factor Characteristics	9-14
9-9	ATS Preprocessing Ground Facilities Cost Summaries	9-17
9-10	IRS Processing Ground Facility Cost Summary	9-20
9-11	RADSCAT Skylab Ground Facility Cost Summary	9-24
9-12	RADSCAT Data Summary	9-25
9-13	CIMATS Ground Facility Cost Summary	9-29
9-14	Simulator Alternatives	9-34
9-15	OEDSF Integration Concept - Alternate: Flight OEDSF	9-36
9-16	OEDSF Integration Concept - Alternate: Full OEDSF Simulator	9-37
9-17	OEDSF Integration Concept - Alternate: Partial OEDSF Simulator	9-38
9-18	OEDSF Integration Concept - Alternate: Software OEDSF Simulator	9-39
9-19	OEDSF Integration Concept - Alternate: OEDSF Characteristics Package	9-40

SECTION 1

INTRODUCTION AND SUMMARY

The traditional approach to processing data from spaceborne sensors in ground facilities has proven inadequate to satisfy even today's requirements in terms of quantity, quality, and timeliness. The data received on the ground is raw; it must undergo various processes to render it useable to the experimenter. These range from simple reformatting to complex domain transformation and information extraction processes which are usually accompanied by correlations with time, ephemerides, and other ancillary data which are resident in exogeneous sources. Data is collected rapidly and simultaneously by many sensors but must wait in line to be processed by centers characterized by limited throughput and high cost.

The Space Shuttle can accommodate 10,000 cubic feet of experiments. It will fly, on the average, twenty-five times per year in the 1980's, and technology will have increased many fold the experimenter's capability to generate data. The magnitude of the data processing requirements in the Shuttle Era will far exceed the capabilities of any conceivable system designed and operated using today's methods. We need a new approach.

This approach must creatively exploit the same advanced technology used by those who generate data. The large capacity of the Shuttle, which can cause the data avalanche, also offers the capability to install a significant portion of a new type of end-to-end processing system onboard, permitting the use of this technology to process data in totally new ways at the data source.

The Onboard Experiment Data Support Facility (OEDSF) has been conceived and designed to fulfill this need. The OEDSF is a totally new approach specifically formulated to process the science data of multiple instruments. Its design directly evolves from analyses of the data processing requirements of over 70 instruments constituting shuttle payloads. Figure 1-1 depicts the OEDSF concept and its role in the shuttle data processing. Each array is a distributed set of elements performing medium level functions: A is an arithmetic element performing the expression $\sum XY + Z$ and all its subsets. T performs all forward and inverse trigonometric functions. E performs all exponential and logarithmic functions.

The array constitutes sets of programmable pipeline processors whose elements perform each assigned function in 0.25 microseconds. Its characteristics are summarized in Table 1-1.

It can handle data rates from a few bits to over 100 megabits per second.

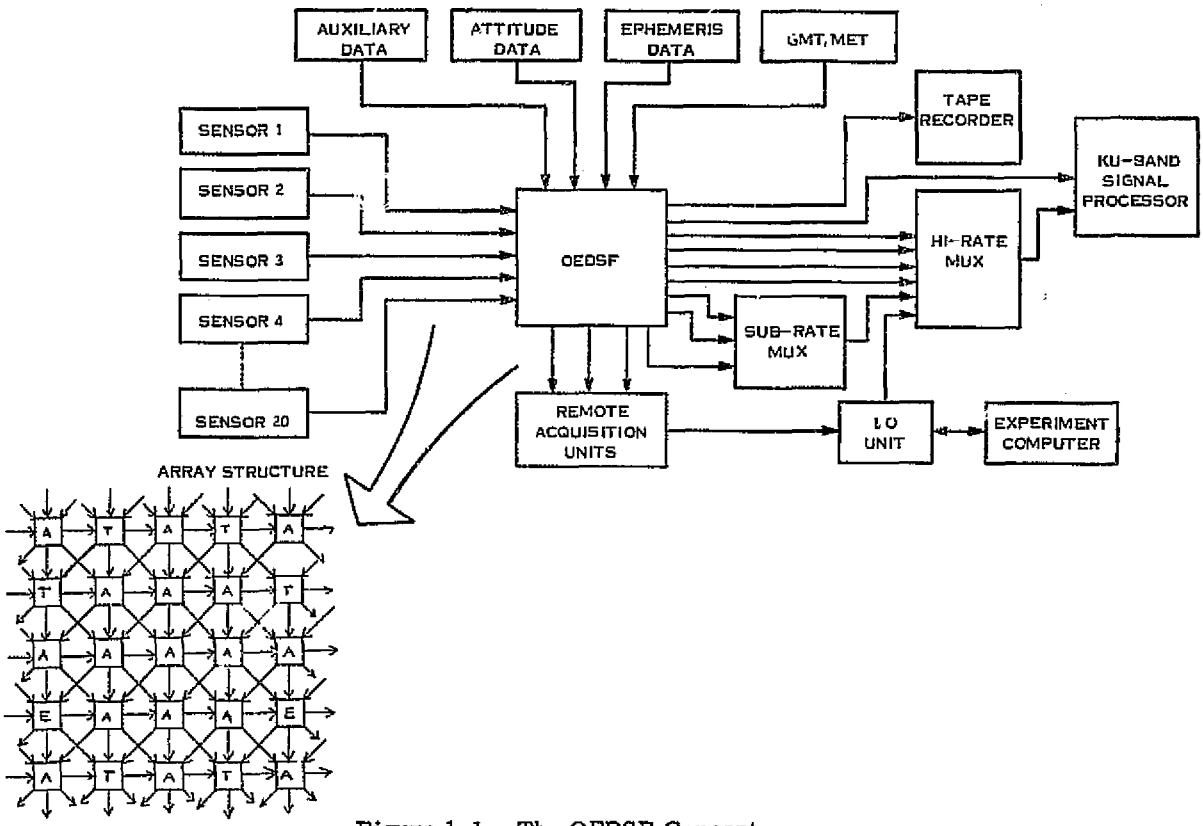

Figure 1-1. The OEDSF Concept

Table 1-1. OEDSF Characteristics

FEATURES	ATTRIBUTES
• 20 SENSORS AVERAGE PER ARRAY	• SIX POINT ARCHITECTURE
• REAL TIME PROCESSING	• 5 X 5 MATRIX CPU
• ASYNCHRONOUS INPUT/OUTPUT	• HIEARCHIAL MEMORY STRUCTURE
• 250 NANOSECOND MACHINE CYCLE	• CENTRAL LIBRARY
• 28,494 AVAILABLE PIPELINES	• THREE GENERIC PROCESSING ELEMENTS
• 100 MEGA FUNCTIONS PER SECOND	• PROGRAMMABLE PIPELINES
• MODULAR AND CASCADABLE	• WIDE BANDWIDTH

Each array occupies one cubic foot, draws 150 watts, and costs approximately $636K*. Its cost effectiveness is demonstrated in Table 1-2 which compares the cost of onboard processing with the cost of conventional ground equipments performing the identical processes for sample instruments.

*Average cost of development and eight production units.

REPRODUCIBILITY OF THE ORIGINAL PAGE IS POOR

Table 1-2. Effectiveness Analysis Summary

	DATA IMMEDIATELY AVAILABLE ON (HDDT)	DATA COMPRESSION RATIO	ANCILLARY DATA	GROUND PROCESSING ELIMINATED	GROUND PROCESSING ADDED	CONVENTIONAL APPROACH		COST OF OEDSF SYSTEM $K
						TIME	COST PER MISSION $K	
ATS	CORRECTED DIGITAL IMAGERY WITH LAT AND LON	NONE	ELIMINATED	CALIBRATION RADIOMETRIC AND GEOMETRIC CORRECTION	NONE	6 TIMES REAL TIME	2648	163.9
IRS	RAW TEMPERATURE AND MIXING RATIO PROFILES WITH LAT AND LON PER GRID	16:1	ELIMINATED	CALIBRATION CALCULATION OF TEMP AND MIXING RATIO	FLAG CHECK	1/8 REAL TIME WITH 24 HOURS DELAY	308	18.4
RADSCAT	σ_o AND T_A WITH LAT AND LON	90:1	ELIMINATED	CALIBRATION CALCULATION OF σ_o AND T_A	NONE	35 TIMES REAL TIME	577	17.7
CIMATS	SPECIE CONCENTRATION WITH LAT, LON, AND ALTITUDE	20:1	ELIMINATED	ALL	NONE	TBD	432	17.9

The elements of the OEDSF have been designed and breadboarded on a General Electric Independent Research and Development Program. The results of this program are reflected in the specific design approaches described in this report.

The OEDSF concept embodies on off-line computer program which converts the set of processes required for each sensor supplied in a user-oriented high level language to the microcode used onboard by the OEDSF. The $950K development cost of this program is included, on a pro-rated basis, in the costs of Table 1-2.

The cost advantages of a central facility over a set of dedicated processors are depicted in Figure 1-2 which plots relative cost (in terms of the number of Integrated Circuits, or an equivalent Number of Instructions for a software approach) against the number of sensors serviced.

Composite sensor B is a hypothetical sensor representing the average sensor in a typical shuttle payload. The OEDSF is cost effective when the number of even lower complexity sensors exceeds a quantity of 8 to 10. Additionally, the OEDSF is designed to be inexpensively reconfigured for totally different sets of sensors whereas dedicated costs continue to be linearly related to the number of new sensors.

REPRODUCIBILITY OF THE
ORIGINAL PAGE IS POOR

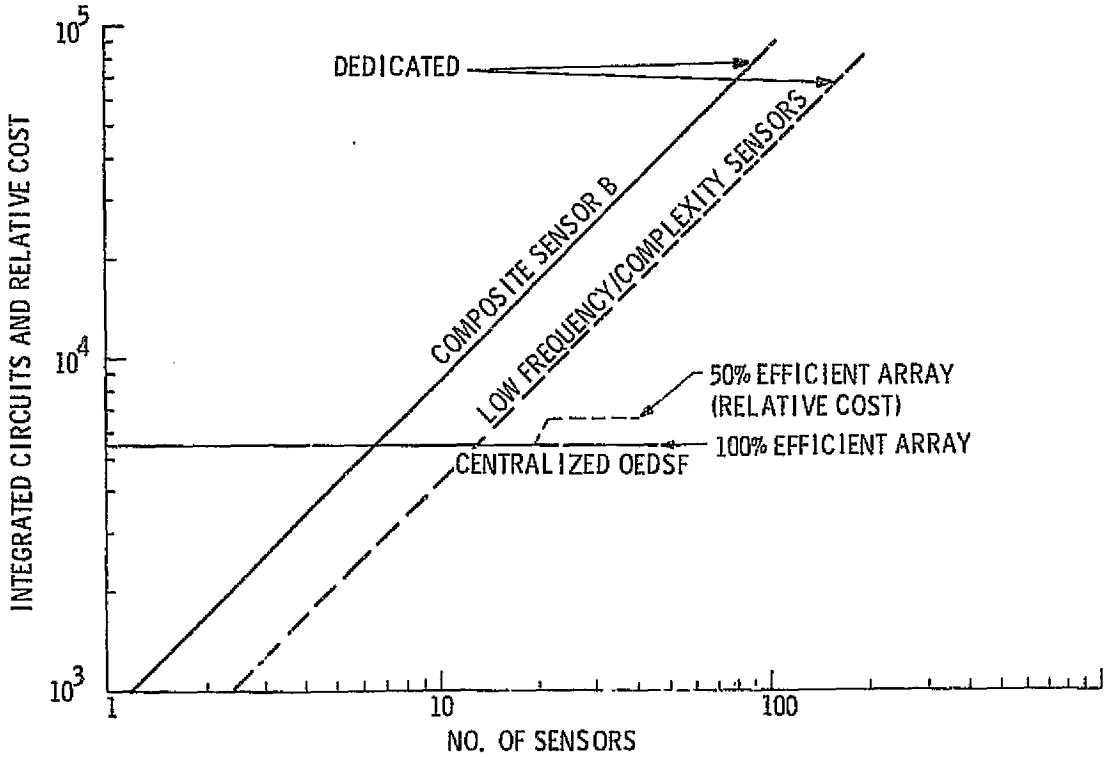

Figure 1-2. Cost of Centralized OEDSF vs Dedicated Processors

The OEDSF is packaged in a modular configuration which provides a totally self-contained array and readily enables expansion to multiple array systems as depicted in Figure 1-3.

An alternate package design provides cooling by attachment to cold plates and obviates the need for cooling fans and atmosphere.

The OEDSF's greatest benefit resides in its real-time processing of the data. This results in the information being immediately useable by the experimenter. It also enables the synergistic operation of multiple instruments whereby the data of one is processed using the data of another. (For example, the data of an infrared spectrometer corrects that of a scanning radiometer to account for atmospheric effects.)

Many processes are based on ancillary information such as vehicle attitude, ephemerides, ambient conditions, and look angles. The OEDSF performs these processes using this information in its real-time form and obviates the need for time-tagging, recording, and subsequent recorrelation with the science data.

The OEDSF embodies growth potential in its strong candidacy for implementation with Large Scale Integration (LSI) circuits. Near-term technology will enable the fabrication of each processing element of the

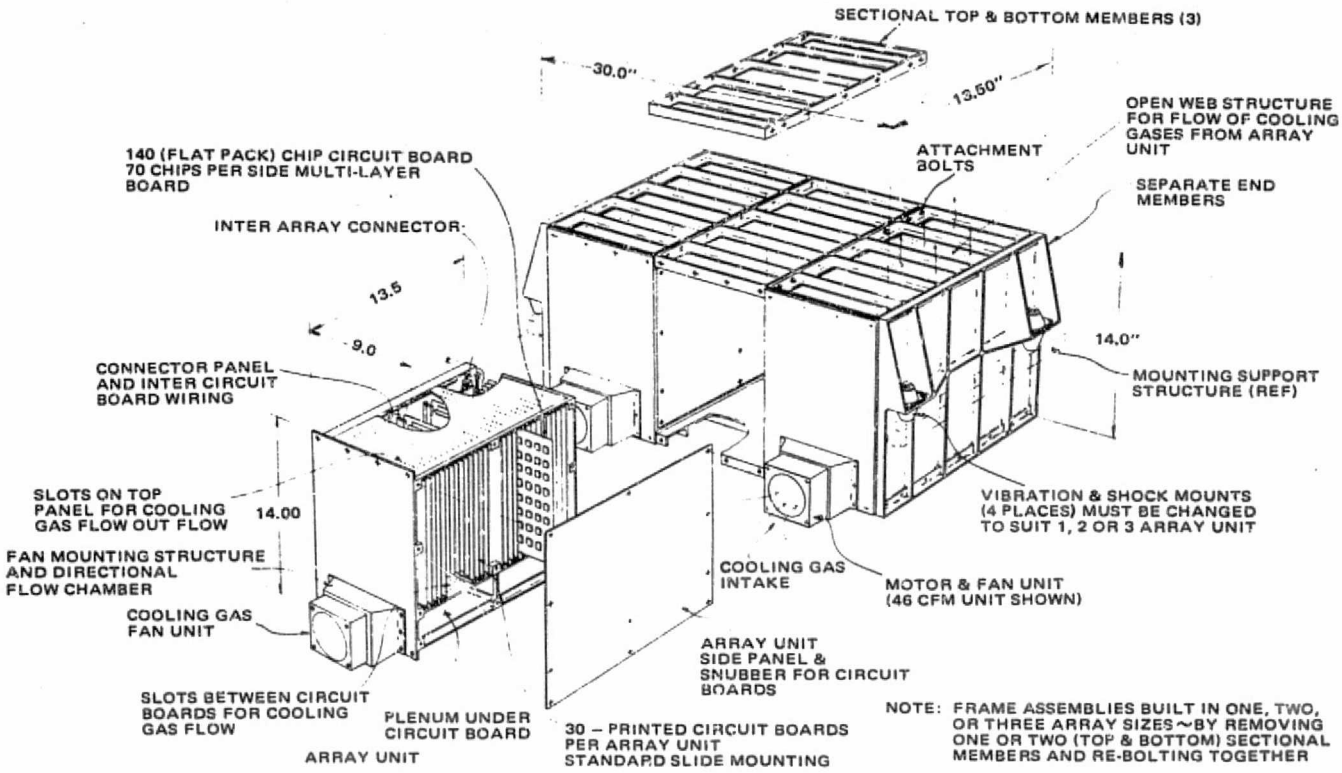

Figure 1-3. OEDSF Mechanical Packaging

OEDSF on a single integrated circuit chip. This will result in a complete array contained on a single board. The low-production cost of such an array will justify the dedication of a complete array to each instrument despite the extremely low level of utilization of its capability. This concept reverses the results of the trade-offs summarized in Figure 1-2.

The study followed the flow plan shown in Figure 1 4.

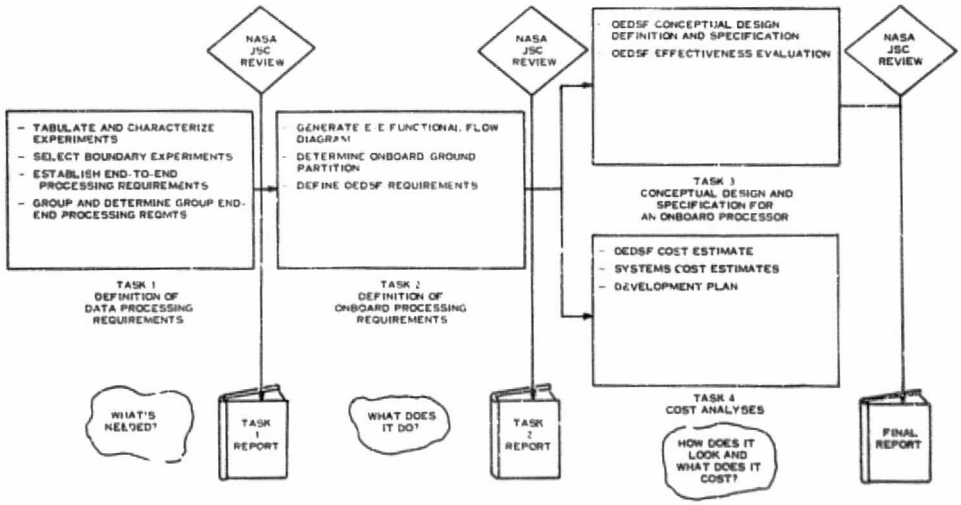

Figure 1-4. Study Flow Plan

REPRODUCIBILITY OF THE ORIGINAL PAGE IS POOR

The objectives of the OEDSF Study summarized in Figure 1-5, have been met.

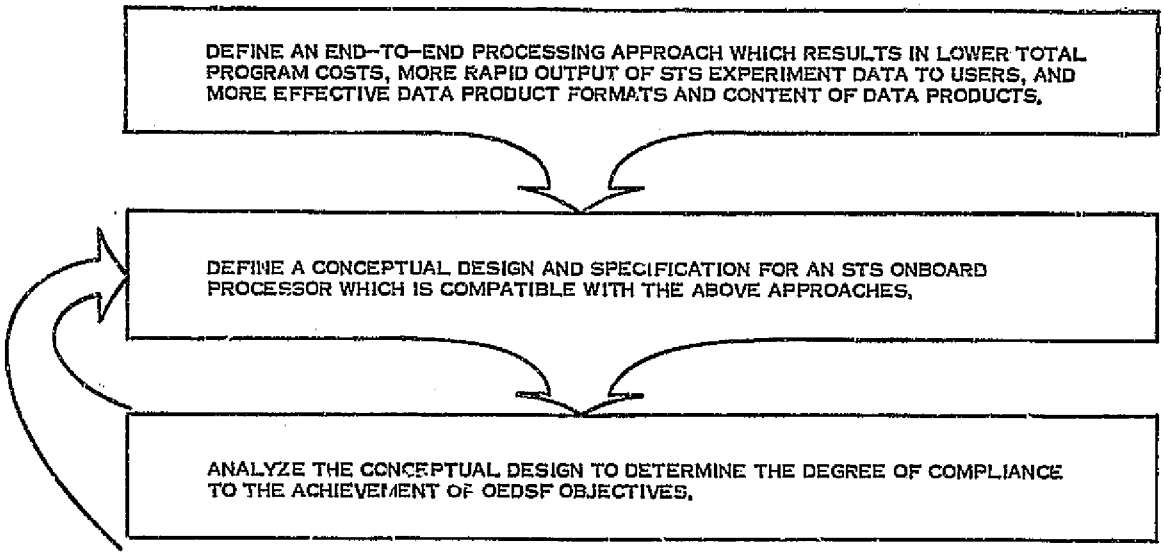

Figure 1-5. OEDSF Study Objectives

CONCLUSIONS

- There are significant benefits to be derived from onboard processing. These include:
  - Timely availability of data to user
  - Lower costs compared to conventional processing approaches
  - Real-time utilization of ancillary information
  - Reduction in the quantity of data transmitted and stored.
- The concept of a processor based on a set of programmable pipeline processor responds to all the requirements of a data processor onboard the shuttle. These include:
  - Cost-effectivity
  - Multiple sensor complements from multiple disciplines
  - Combinations of very low and very high data rates
  - Real-time processing
- The level and extent of processing performed onboard that is beneficial or desired by the user is dependent on the class of user. Most, however, benefit from performing those processes which use ancillary data.

REPORT ORGANIZATION

This report is organized as follows:

Section 1 is the introduction and summary.

Section 2 describes the methodology of the study: The selection of boundary sensors, the determination of their processing requirements, the partitioning of the required processes between onboard and ground segments, the conception of the architecture for the onboard processor, the design of the processor, and the analyses of its effectiveness.

Section 3 discusses the selection of the Boundary Sensors: The tabulation of candidate shuttle instruments, generation of selection criteria, selection and justification of the boundary sensors.

Section 4 derives the processing requirements of the boundary sensors in a real time mode and the resulting requirements on the OEDSF.

Section 5 synthetizes a hypothetical instrument based on the average rate and processing requirements of the set of sensors examined in Section 3 as related to the boundary sensors. This instrument provides a more generalized set of requirements than the boundary sensors and enables the extrapolation of the results based on the boundary sensors to full payloads.

Section 6 examines various processing system architectures suitable for the OEDSF. The array (or matrix) concept is evolved and traded-off against more conventional approaches.

Section 7 describes the entire conceptual design of the OEDSF. The major elements discussed include the Central Processing Unit (CPU), the asynchronous Input/Output concepts, the Data Base design, the Bus structure, the Control structure, and the mechanical and thermal considerations.

Section 8 describes the Index Generating Program. This major software element is key to the achievement of relegating the effort of programming the OEDSF for multiple sensor payloads on each mission to a trivial and inexpensive task.

Section 9 discusses the effectiveness of the OEDSF in terms of both functional performance and costs. The advantages of onboard processing are described and the costs of performing processes onboard with the OEDSF are compared to those for performing the identical processes using conventional methods. Users are identified and the benefits they derive from onboard processing are defined. This section also analyzes the alternatives available to provide OEDSF simulation to the experimenters during levels IV and V integration with their experiments.

Section 10 examines the aspects of the OEDSF related to Reliability, Quality Assurance and Safety.

Section 11 is the development plan for the OEDSF. It presents a proposed schedule tailored to the anticipated start date of the hardware program and the scheduled date for target shuttle flights, a work breakdown structure, and a work package description.

Appendix A is an evaluation of the present state-of-the-art and a forecast in the technologies applicable to the OEDSF.

Appendix B are a set of benchmark programs used in trade-offs between hardware and software implementation of various segments of the OEDSF CPU.

Appendix C describes a polynomial generator which is an alternate to the different processing elements of the CPU and was used in the CPU elements trade-off analyses.

Appendix D is the Design and Requirements Summary for the OEDSF.

SECTION 2

STUDY METHODOLOGY

The design of the OEDSF was developed by a point-design approach; i. e., designing to satisfy specific requirements, then broadening these requirements to encompass a more general set.

The study was divided into four tasks which formed a logical flow beginning with an analysis of sensors and their processing requirements and culminating in the design of a processor satisfying these requirements onboard in a cost effective approach. The flow of the study is depicted in Figure 2-1.

A set of over 150 instruments was culled to select 77 experiments which are candidates for flight on the shuttle.

A limited set of these experiments were selected as "boundary" experiments because they satisfied the selection criteria which imposed "tail-pole" and "representativeness" conditions on the data processing requirements. The processing requirements for these selected boundary experiments were then defined. Figure 2-2 summarizes the results of this effort.

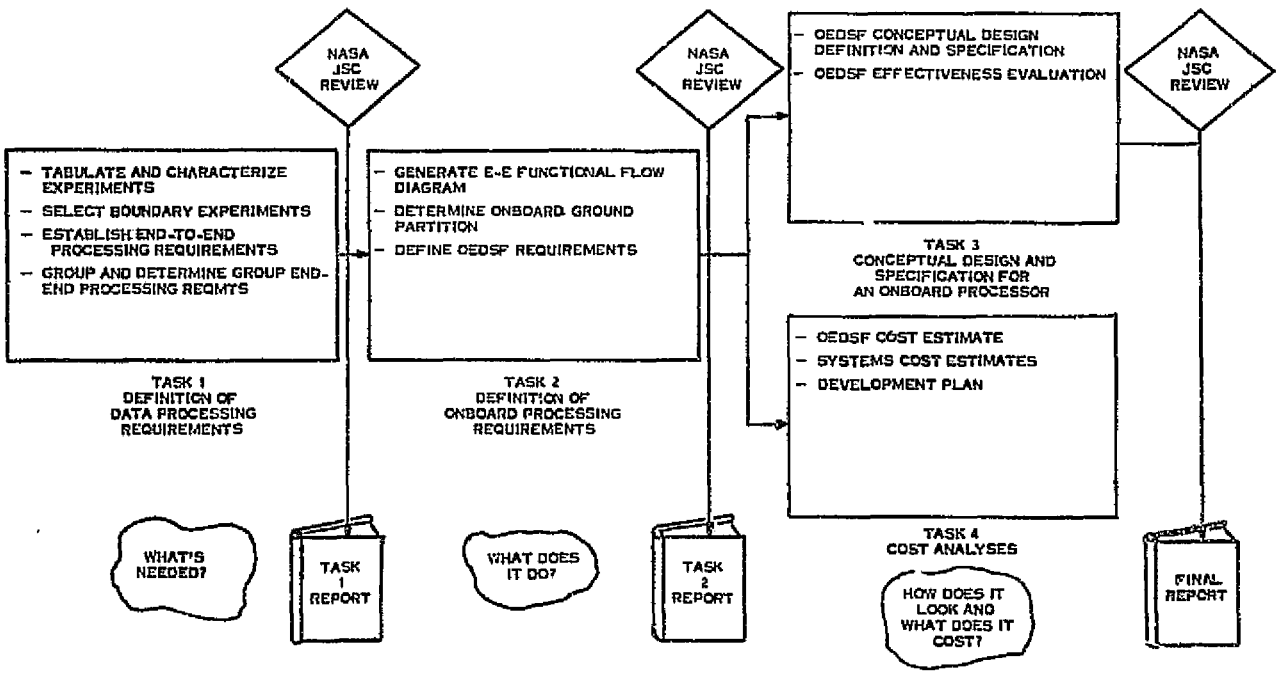

Figure 2-1. Study Flow Plan

REPRODUCIBILITY OF THE ORIGINAL PAGE IS POOR

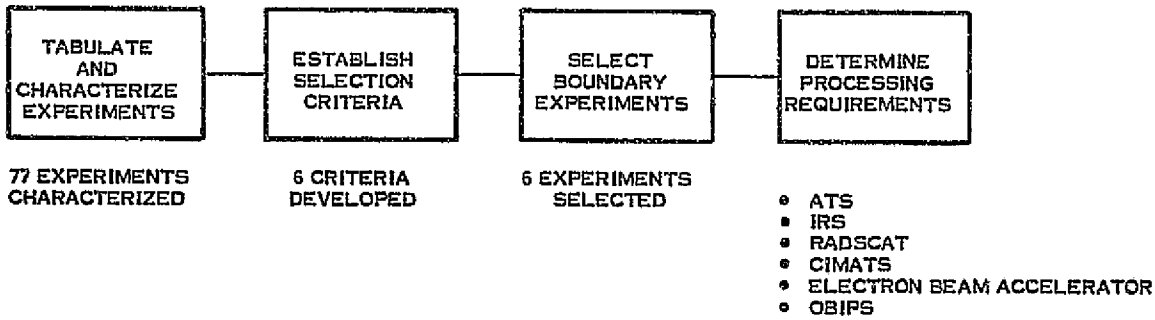

Figure 2-2. Task I Summary

The processing requirements of the boundary sensors were then converted to real-time processes because onboard processing implies exploitation of the real-time availability of ancillary data. Criteria were developed for processes which would benefit from onboard processing and applied to the set of processes required by the boundary sensors.

The set of requirement assigned to on-board processing define the requirements on the OEDSF. Decomposition of the on-board processes yielded the basic requirements for the capability of the OEDSF. The levels of decomposition weighted by the considerations of the goals of handling multiple sensors on repeated flights at data rates ranging from tens of bits per second to hundreds of megabits per second were used to define a suitable architecture.

These efforts are depicted in Figure 2-3.

The selected onboard processor architecture was then developed into a complete conceptual design oriented toward the cost effective processing of shuttle sensor payloads. The specific areas of analysis included the Central Processing Unit, the interfaces with sensors and spacelab equipments, the structure control, the data base, and the bus structure. The design of the processor was an iterative process which continuously evaluated the impact of the design on the satisfaction of the OEDSF goals and objectives. This process is depicted in Figure 2-4.

The initial design was specifically aimed at satisfying the requirements of the boundary sensors and was then evaluated on its capability to process randomly selected sensors.

The OEDSF was ther evaluated in terms of its benefits. These include technical benefits such as increased accurary and improved timeliness, and cost benefits. The costs of processing data on-board with the

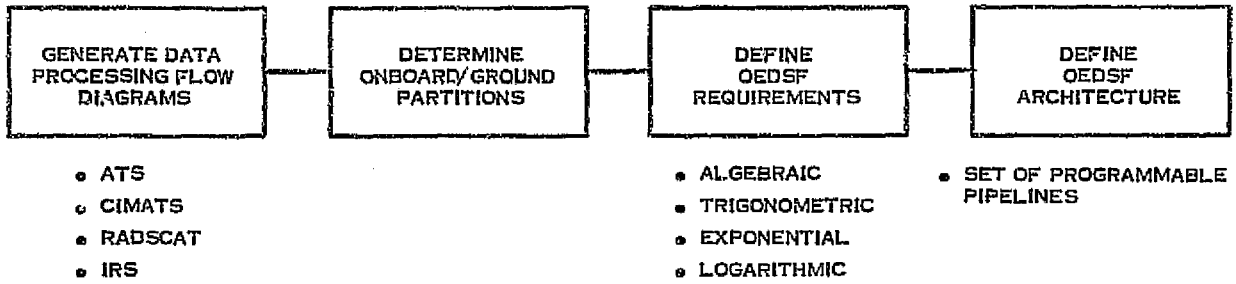

Figure 2-3. Task 2 Summary

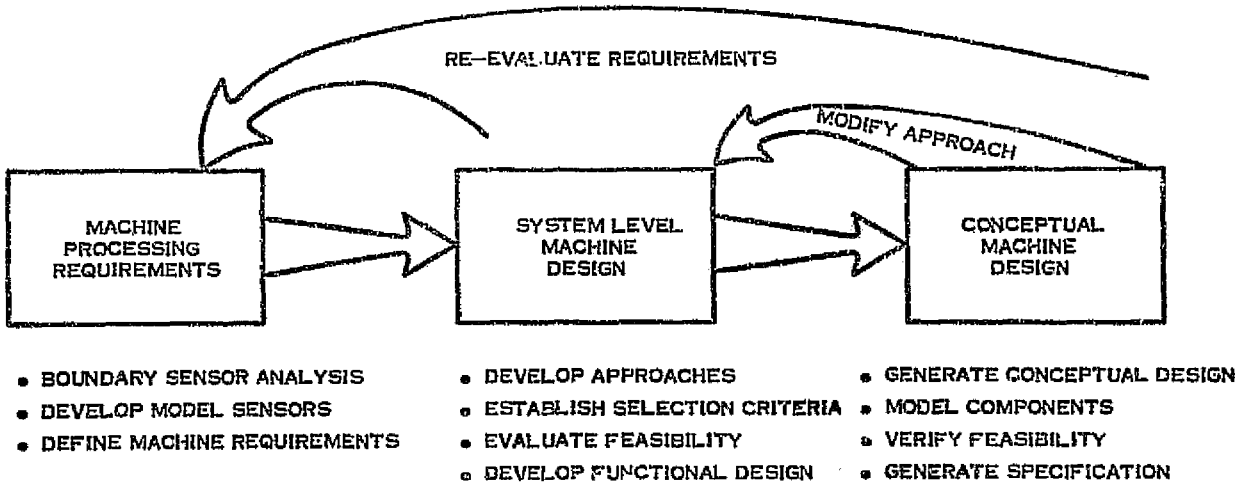

Figure 2-4. Task 3 Summary

OEDSF were determined using the cost of producing the OEDSF, those of flying it on the shuttle, and those associated with its concept including the costs of integration.

These were compared with the costs associated with conventional ground equipments using the boundary sensors as samples. These cost comparisons were then extended to full shuttle payloads.

As a final product of the study a development plan was evolved. This plan provides a schedule which produces an OEDSF flight model within the time frame anticipated from authorization to target shuttle flights, a Work Breakdown Structure which was also used in deriving the cost of producing an OEDSF, and a Work Package Description defining the efforts identified in the Work Breakdown Structure.

SECTION 3

BOUNDARY SENSORS SELECTION

The methodology of the study depended on point designs performed on selected instruments. These instruments are termed "boundary" sensors and are characterized by features which are extremes of their domain or by a high degree of representativeness.

77 instruments were identified as candidate boundary sensors and tabulated with the features of interest in data processing to enable selection, as exemplified by Table 3-1. The complete set of tabulations is contained in the OEDSF Task 1 report.

The criteria for the selection of these boundary sensors are discussed below.

CRITERIA FOR SELECTION OF BOUNDARY EXPERIMENTS

1. Data Rates and Data Storage: Experiments which represent a large range of data rates should be chosen. Such a selection will provide several boundary points in terms of the data processing which can or must be considered in designing a processing system. For example, instruments with data rates less than 500 kbps represent experiments for which considerable on-board processing such as formatting, application of calibration data, and partial or complete data reduction can be accomplished. Data rates greater than 50 mbps, on the other hand, may require the application of various data compression techniques and partial pre-processing to reduce the total accumulated volume of data to a level which can be practically recorded or transmitted.

2. Overall Processing Requirements: The end-to-end processing requirements should involve a level of complexity which will truly benefit from the features offered by on-board processing. When the end-to-end processing requirements of a particular experiment are viewed, it will be apparent that certain processing functions can be performed on-board. Typical candidate processing functions include complex correction techniques, correlation of several parameters, inversions or lengthy iterative calculations. If the end products of the experiment can be obtained more efficiently (i.e., quicker, less cost, etc.) by performing such on-board processing then the experiment will serve as a good boundary experiment.

3. Representativeness: The data and its processing requirements should be characteristic or representative of that from many experiments. By considering the point by point processing requirements of these specific experiments (e.g., radiometric calibration and correction, geometric correction, data quality assessment, etc.) generalized processing algorithms can be designed to

Table 3-1. Sample of Sensor Tabulations

Experiment	Science Data Form	Science Data Rate	Measurement Period	Ancillary Data Required	On-Board Displays Required	Interaction With Other Instruments Possible (P) or Req'd (R)	Data Processing Requirements	Objective or End Product	Unusual Requirements and Comments
#6 Gas Plume Release	TV	4.5 Mhz	Maximum of 4 hrs. per day, concurrent with accelerator operation.	N/A	Replay of several secs of TV from video tape.	Operates in conjunction with electron & ion accelerators	Little processing req'd. Data consists of optical observations of plume release.	Video tape of gas release.	Controls of accelerators must be coordinated with gas release & video taping.
#7 Pyrohelio-meter & Spectrophotometer	D	3 20 BPS	2 or 3 scans per daylight half-orbit. 10 minutes per scan.	Pointing angle relative to the sun. Temperature and ephemeris data.	Lights to show when various controls are activated.	Simultaneous measurement of earth's albedo with second instrument (P). Boresight with sun-tracker (R).	Simple correlation between instruments & with ancillary data. Low level processing requirements.	Value of solar constant and solar spectral irradiance.	
#8 Optical band image & photometer system	TV 2 units D Photo meter	4 Mhz each 40 KBPS	Determined by phenomena to be measured.	Ephemeris data; attitude to 0.02°; time of middle of TV picture to .003 sec.	One video TV monitor & various indicator lights	None (R)	Basic output is intensity at at preselected wavelengths. Quantity & mix of data types present a data mgmt. problem.	Monochromatic images of faint natural phenomena, e.g., auroras (natural & artificial), glows, etc.	Direction of photometers controlled by crew, based on TV images.
#9 Infrared Interferometer	D	1000 BPS	3 minutes per data take; up to 3 data takes during a given orbit.	Ephemeris data;pointing of instrument with acc. ≥ 0.1°.	TBD	None (R)	Basic output is intensity vs. wavelength. Requires calibration data to correct meas.	Special analysis at IR wavelengths (Specific use TBD)	
#10 Limb Scanning Infrared Radiometer	D	12 KBPS	Operates from dark side of the terminator; one data take may be up to 5 min.	Ephemeris data. Relative pointing angle. Detector temp.	Display for crew evaluation of instrument status & data from 4-12 spectral chs.	None (R)	Basic output is intensity vs. wvlgth. Req. calibr. data. Spectrum compared with kwn. spectra to idnt. trace gases.	Measurement of trace species at altitudes up to 120 Km.	
#11 Magnetoplasma-dynamic (MPD) arc (Level I Diagnostics)	A	1 Mhz	Approx. 4 hours per day	Ephemeris data. Ambient plasma densities	CRT display of pulse wave forms & several housekeep. parameters	Operates with mass spectrometers, ion mass analyzers, TV, etc. MPD arc is a subsystem of particle accel. system	Many interacting inputs. Requires subtract. of extraneous fields which may involve complex algorithms. Real time data display req'd.	Map of earth's magnetic field lines. Effect of perturbing ionosphere conductivity & generation of plasma waves.	Requires rapid digitization of pulse wave forms.

REPRODUCIBILITY OF THE ORIGINAL PAGE IS POOR

handle the boundary experiments as well as all experiments which require the same or similar processing functions. Also, an experiment which by itself or when used in consort with other experiments requires the processing and correlation of several types of data (e.g., digital, analog, video, etc.) provides the requirements for designing a more versatile data support system.

4. On-Board Processing: An experiment should have the potential for benefiting from on-board processing. One of the prime objectives of the OEDSF is to exploit the real-time availability of ancillary data or the real-time utilization of other instrument data to perform on-board processing which will minimize the amount and diversity of the data which must be transmitted or returned to earth. Such on-board pre-processing or processing of the data should have a significant impact on the end-to-end processing: cost, timeliness, or quality.

5. Real-Time Requirements: Certain experiments require or desire real-time processing either for quick look and evaluation of instrument operation, or to use the data in adjunct experiments. The real-time requirements must be considered as one of the "points" in the point-by-point design of a processing system. While usually not a driving parameter in the overall design, the real-time needs render the experiment a prime candidate for selection if it also meets other boundary criteria.

6. Status of Experiment Development: The experiment should be developed to the state where it is possible to characterize its data output and define its data processing requirements. It will then be possible to do a point-by-point design of a processor for the selected experiments followed by a generalization of the design to be compatible with several experiments having the same basic requirements.

An additional consideration not explicitly stated as a criterion was to obtain a mix of various requirements and technologies, i.e., active, passive, spectral coverage (visual, microwave).

The instruments selected are indicated in Table 3.2 together with the reason for selection and the potential benefits of onboard processing. The reasons for their selection is amplified in the following paragraphs.

1. Advanced Technology Scanner (ATS)

The data and processing from the ATS is typical of imaging visible/IR spectrum sensors. The output consists of digital words representing radiance values for specific spectral intervals and geodetic locations. This raw data is "in error", and must have both radiometric and geometric corrections applied. Such corrections can be performed most efficiently on-board by utilizing real-time calibration input parameters. In addition, the very high data rate (~90 mbps) points out the

Table 3-2. Boundary Experiments

EXPERIMENT	REASON FOR SELECTION	POTENTIAL BENEFITS OF ONBOARD PROCESSING
ADVANCED TECHNOLOGY SCANNER (ATS)	DATA AND PROCESSING IS TYPICAL OF IMAGING VISIBLE/IR SPECTRUM SENSORS. VERY HIGH DATA RATE (~90 MBPS). RELATIVELY COMPLEX PROCESSING, SOME OF WHICH IS MORE EFFECTIVELY DONE ON-BOARD.	DATA TOTALLY PREPROCESSED/ CORRECTED. READY FOR INFORMATION EXTRACTION: DATA IMMEDIATELY USEFUL TO RESOURCE MANAGER USER
CORRELATION INTERFEROMETER MEASUREMENTS OF ATMOSPHERIC TRACE SPECIES (CIMATS)	EXAMPLE OF DATA FROM A BROAD CATEGORY OF INTERFEROMETERS. REQUIRES LIMB INVERSION AND ITERATIVE CALCULATIONS. REQUIRES 3-4 MB STORAGE PER ORBIT.	TOTALLY PROCESSED DATA REDUCES STORAGE REQUIREMENTS FROM $> 10^8$ BITS TO TABULATIONS ELIMINATES NEED FOR ANCILLARY DATA AND CORRELATION WITH SCIENCE DATA
INFRARED SPECTROMETER (IRS)	RELATIVELY LOW BIT RATE (3.4 KBPS). PERMITS EXTENSIVE REAL-TIME ON-BOARD PROCESSING. REDUCED DATA CAN BE USED IN REAL-TIME BY OTHER SENSORS AS AUXILIARY CORRECTION DATA.	PREPROCESSING CAN SIGNIFICANTLY REDUCE COMPLEXITY OF GROUND PROCESSING WHICH PRESENTLY UTILIZES LARGE COMPUTERS FOR EXTENDED TIME PERIODS
ELECTRON ACCELERATOR	COMPLEX DISPLAY AND STORAGE REQUIREMENTS (ANALYSIS AND CRT DISPLAY OF 100 NS PULSE SHAPES). REQUIRES FAST DIGITIZATION OF ANALOG DATA. REQUIRES INTERACTION WITH OTHER INSTRUMENTS.	ENABLES REAL-TIME CONTROL AND INTERACTION WITH OPERATOR. REDUCTION OF STORAGE OF HIGH DATA RATE AND ANCILLARY DATA.
MICROWAVE RADIOMETER/ SCATTEROMETER (RADSCAT)	PROCESSING REQUIRES COMPLEX UTILIZATION OF ANCILLARY DATA WHICH IS AVAILABLE ON-BOARD IN REAL-TIME. EXPLOITATION OF THIS AVAILABILITY TO CALCULATE RADAR BACKSCATTER CROSS-SECTIONS WILL SIGNIFICANTLY REDUCE THE QUANTITY OF DATA RETURNED TO GROUND AND GREATLY REDUCE THE TIME REQUIRED FOR END-TO-END PROCESSING.	ELIMINATION OF LARGE QUANTITIES OF ANCILLARY DATA AND TIME CONSUMING RE-CORRELATION ON GROUND. DATA IMMEDIATELY USEFUL TO EXPERIMENTER.
OPTICAL BAND IMAGE AND PHOTOMETER SYSTEM (OBIPS)	BOTH TV AND DIGITAL DATA AS OUTPUTS. REQUIRES HIGH DEGREE OF CREW INTERFACE (ON-BOARD REAL-TIME TV DISPLAY). HIGHLY ACCURATE ATTITUDE AND TIMING DATA MUST BE CORRELATED WITH SCIENCE DATA BY INSERTION INTO THE VIDEO VIA A CHARACTER GENERATOR (THIS MAY BE A GENERAL REQUIREMENT FOR ALL VIDEO EXPERIMENTS). LARGE PERCENTAGE OF TV DATA CONTAINS NO INFORMATION AND CAN BE EDITED OUT OF MAIN DATA STREAM	ELIMINATION OF USELESS DATA WHICH MAY CONSTITUTE UP TO 95% OF DATA COLLECTED AT 8MHZ RATE.

REPRODUCIBILITY OF THE ORIGINAL PAGE IS POOR

need for such processing, together with some type of on-board data quality assessment to insure that only useable data is recorded or transmitted for complete analysis.

2. Infrared Spectrometer (IRS)

Nearly identical versions of the IRS experiment have been flown previously so that its data processing requirements are well defined. Radiance calibration and angular corrections can be performed efficiently on-board utilizing the availability of real-time ancillary data. Analysis of the corrected raw data can be performed on-board to the extent necessary for use by other sensors as auxiliary correction data. The end-to-end processing involves inversion of the radiative transfer equation and evaluation of the iterative solution of the water vapor equation.

3. Correlation Interferometer Measurements of Atmospheric Trace Species (CIMATS)

The data from the CIMATS experiment is representative of a broad category of interferometers. The low bit rate (~3 kbps) will permit extensive on-board processing. Real-time ancillary data, together with a data bank of correlation functions can be used to perform the necessary corrections on the raw data and carry the required processing to the end product. Processing of the corrected data will require limb inversion and iterative calculations (e.g., solution of 10 equations in 10 unknowns).

4. Microwave Radiometer/Scatterometer

Processing of the Microwave Radiometer/Scatterometer data requires complex utilization of ancillary data which is available on-board in real-time. Exploitation of this availability to calculate radar backscatter cross-sections will significantly reduce the quantity of data returned to ground and greatly reduce the time required for end-to-end processing. In addition, real-time processing is desired to determine trend analyses of raw data (such as means and standard deviations) to provide a rapid indication of proper instrument operation.

5. Electron Accelerator

The electron accelerator must be used in consort with various detectors. Consequently, precise timing between the accelerator operation and the detecting instruments is required. Real time data displays and preliminary processing will be needed to select the accelerator program (i.e., pulse duration, pulse repetition rate, beam injection angle, etc.). Capability for storage and recall of pulse shapes of several rapidly varying parameters, which must be correlated in time, will be required. This may necessitate the use of fast digitizers with selectable sampling frequencies of up to 100 MHz.

6. Optical Band Image and Photometer System (OBIPS)

The experiment consists of three subsystems which have both TV and digital data as outputs. A large percentage of the TV data contains no information and can be edited out of the main data stream, thereby reducing the telemetry or recording requirements. Highly accurate attitude and timing data must be correlated with the science data by insertion into the video via a character generator. Additional housekeeping data is inserted in the vertical interval (i.e., during the vertical retrace). This method of inserting ancillary data into the science data may be a general requirement or desired capability for all video experiments.

Figure 3-1 summarizes the degree of representativeness achieved by this selection in the four domains of interest.

Figures 3-2 through 3-7 summarize the data processing steps required for each of the boundary sensors.

Following the completion of Task 1, the OBIPS and the Electron Accelerator were dropped from the list of boundary sensors because their processing requirements were not defined sufficiently to allow fruitful results in Task 2.

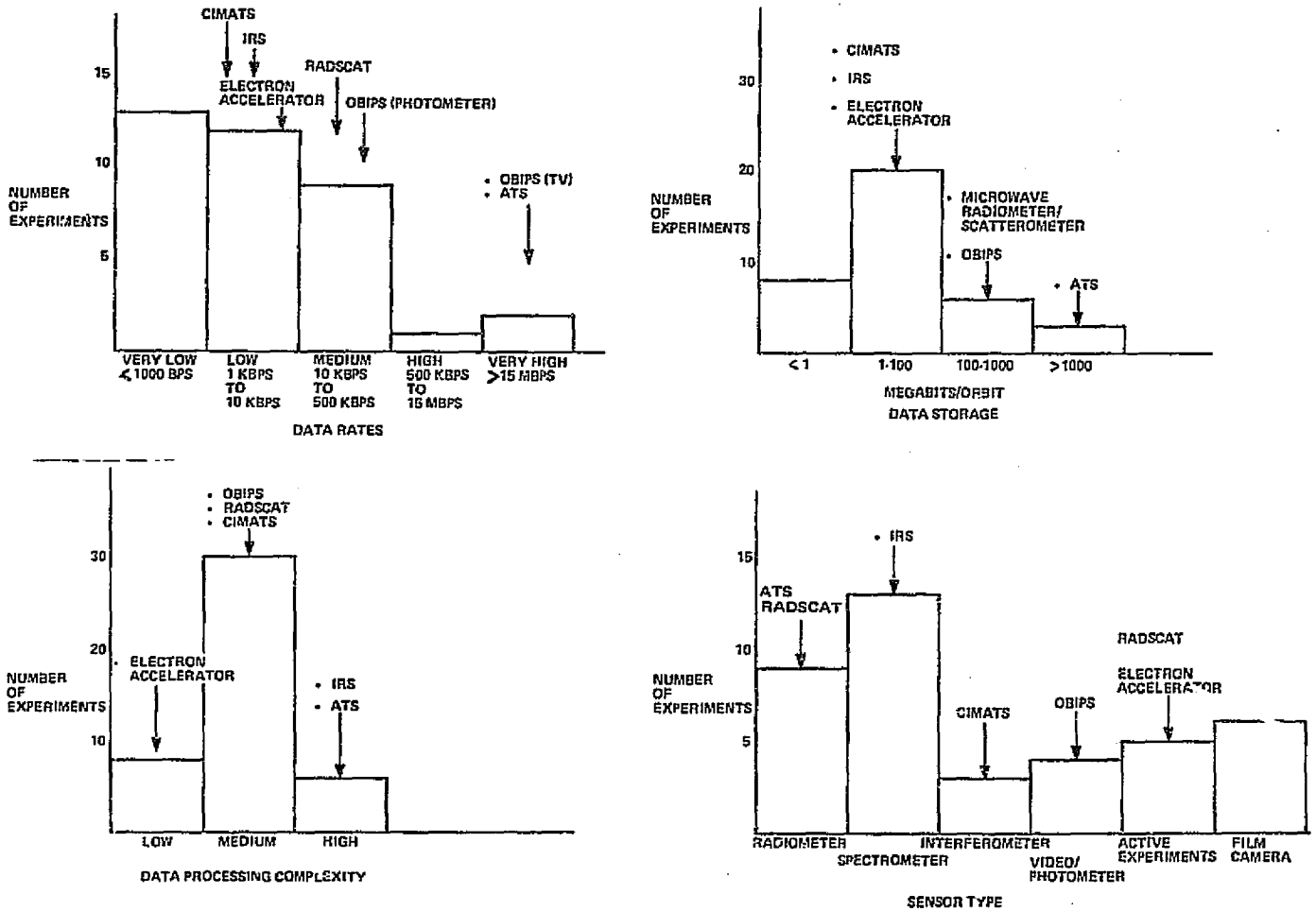

Figure 3-1. Representativeness

REPRODUCIBILITY OF THE ORIGINAL PAGE IS POOR

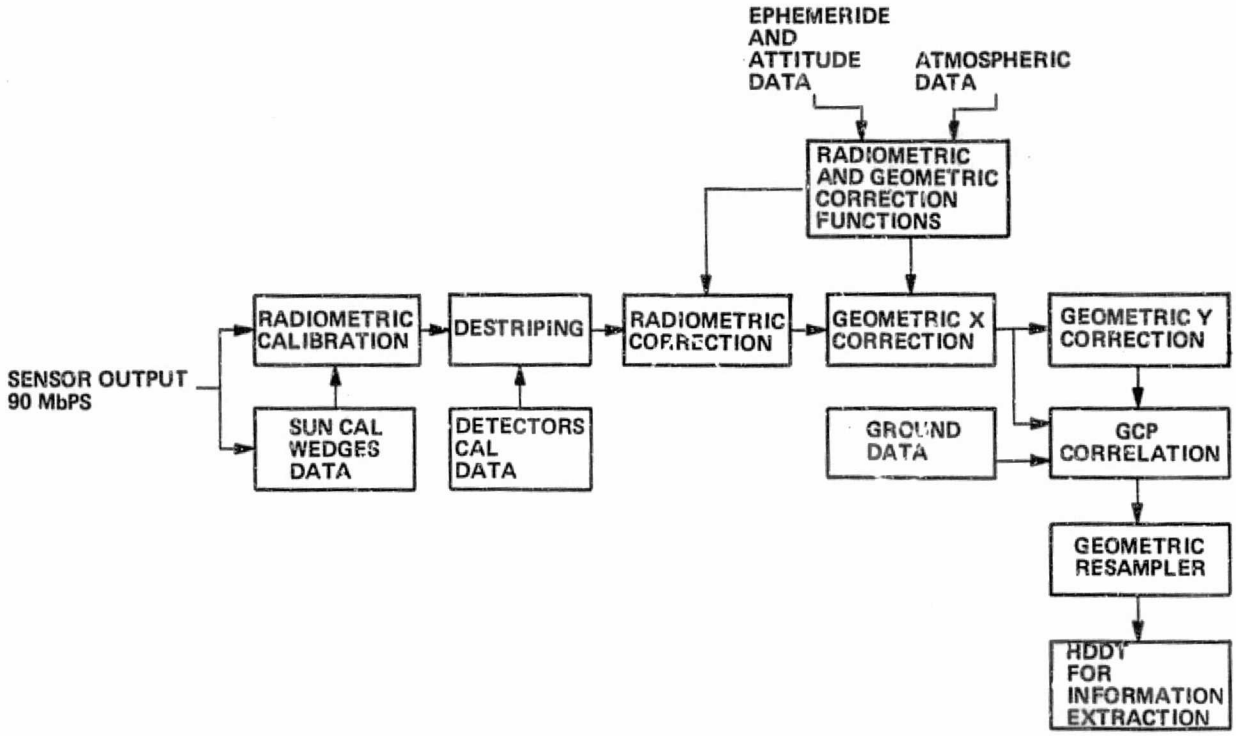

Figure 3-2. Advanced Technology Scanner Data Processing Flow Diagram

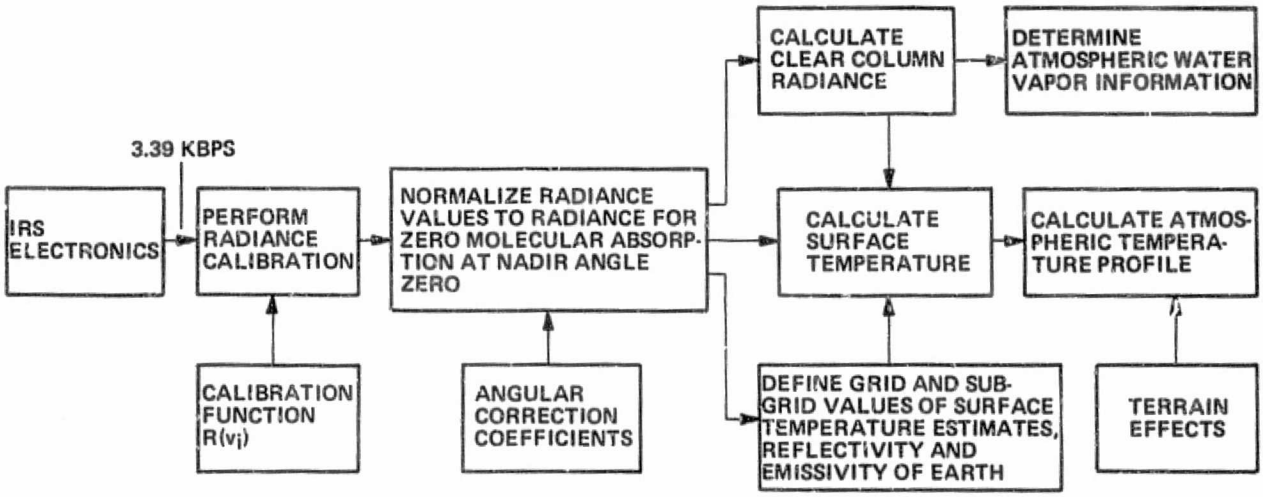

Figure 3-3. Infrared Spectrometer Data Processing Flow Diagram

REPRODUCIBILITY OF THE ORIGINAL PAGE IS POOR

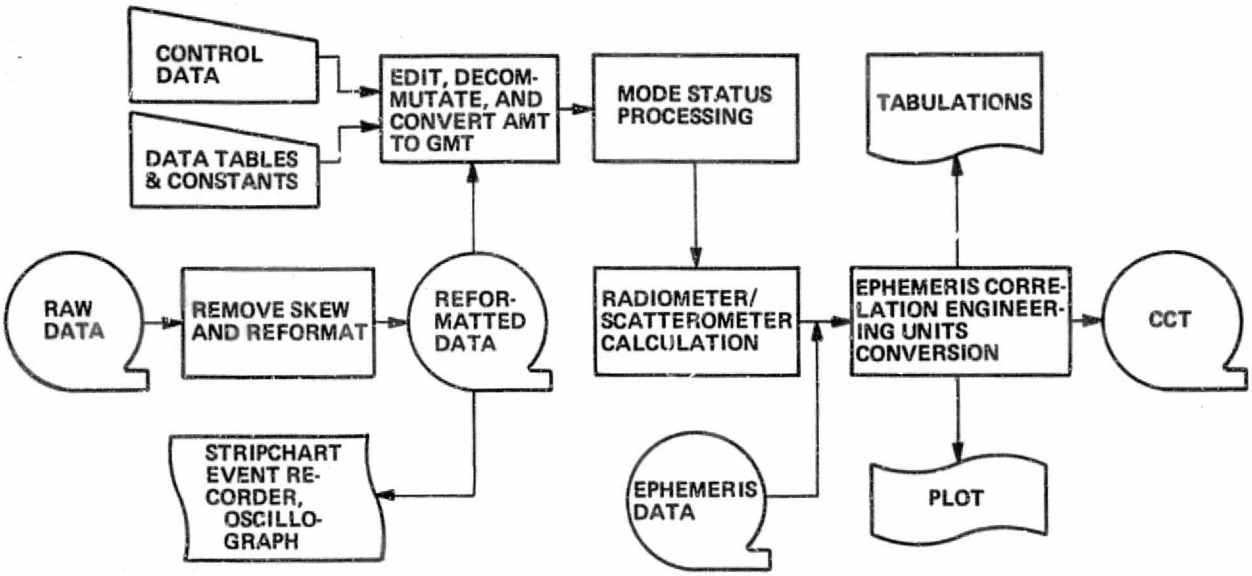

Figure 3-4. Radiometer/Scatterometer Data Processing Flow Diagram

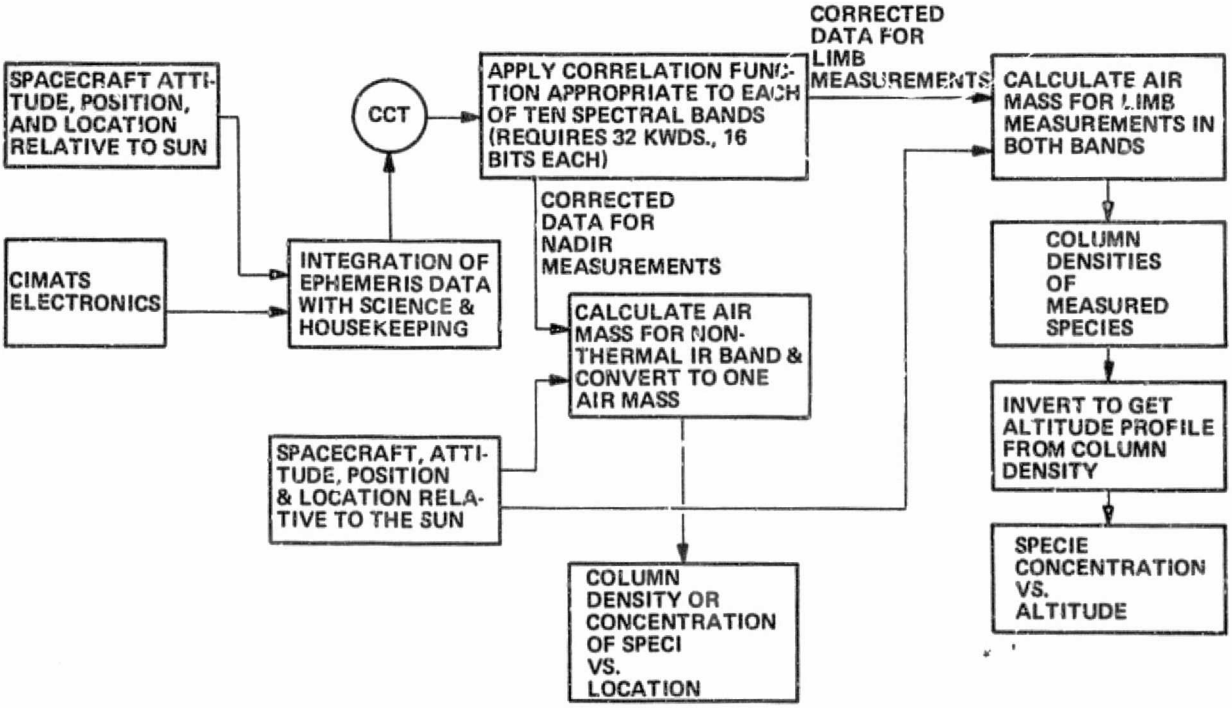

Figure 3-5. CIMATS Data Processing Flow Diagram

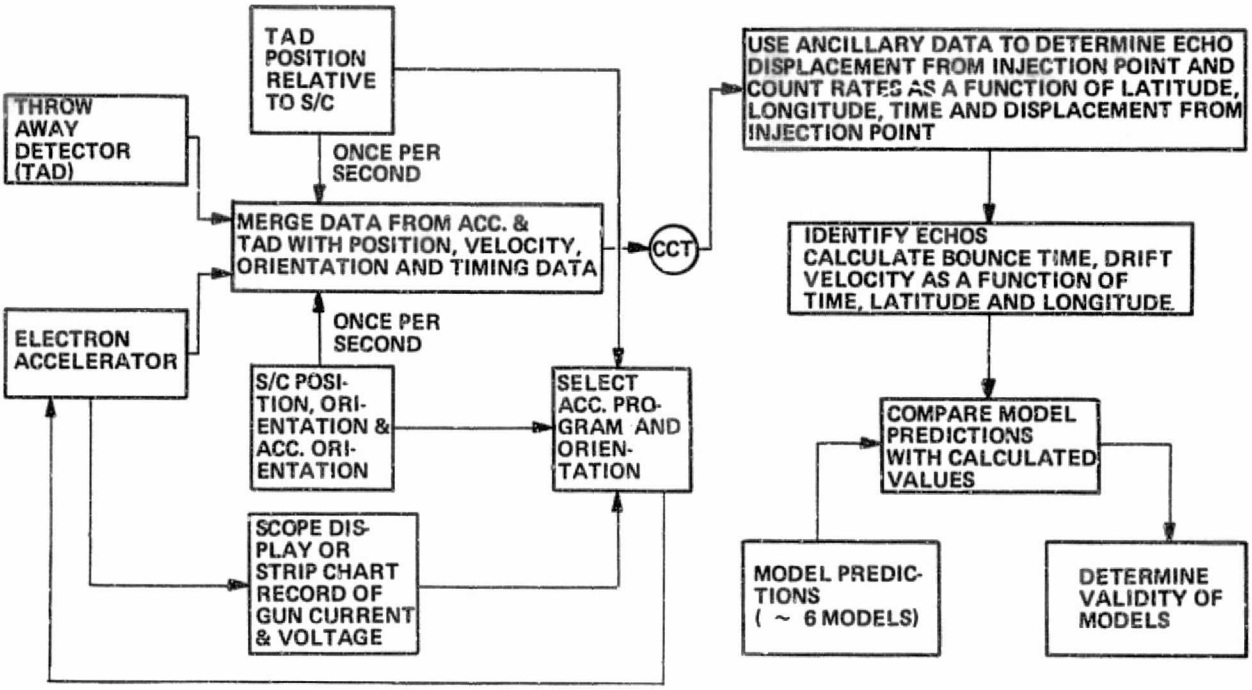

Figure 3-6. Electron Accelerator Data Processing Flow Diagram

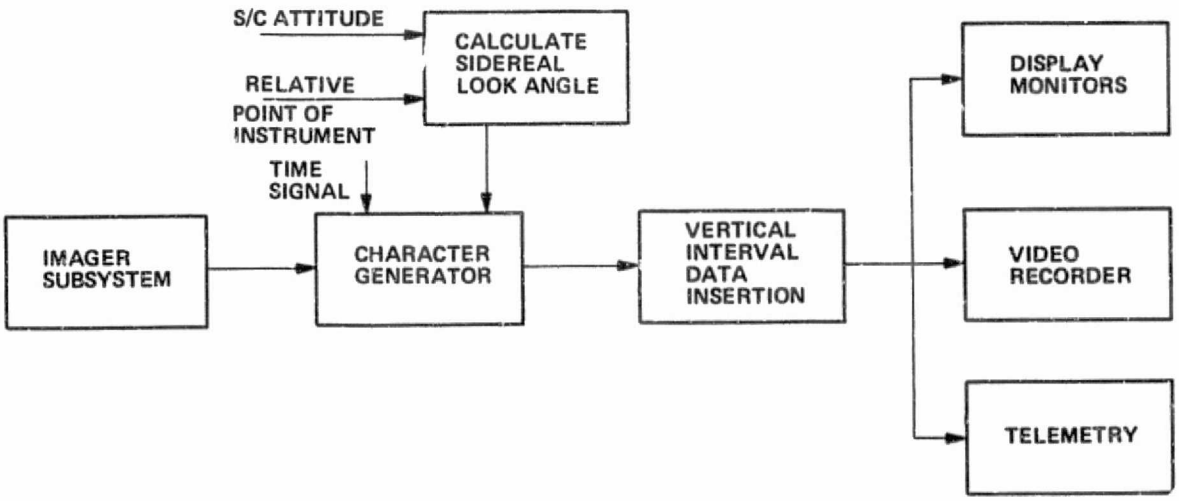

Figure 3-7. Optical Band Imager and Photometer System Data Processing Flow Diagram

REPRODUCIBILITY OF THE ORIGINAL PAGE IS POOR

SECTION 4

PROCESSING REQUIREMENTS OF THE BOUNDARY SENSORS

This section discusses the derivation of data processing approaches suitable for an on-board processor, the partitioning of the processes between on-board and ground and the resulting requirements for the on-board processor and the ground system.

4.1 ONBOARD PROCESSING REQUIREMENTS

The OEDSF operates in real time. Accordingly, the processes it performs must be compatible with this mode of operation. A major effort of Task 2 was to convert the processing requirements of the boundary sensors into real-time processes. Figure 4-1 is one of four charts representing the processing requirements of the IRS. Figure 4-2 is one of the nine charts which converts these requirements into a set of real-time processes for the IRS. The total set of these processes indicate the logical partitioning for processes to be performed on-board and for those to be performed on the ground. The set of criteria selected to effect this decision is summarized in Table 4-1 and discussed in the following paragraphs.

1. Processing performed on-board by the OEDSF should satisfy all the users of the data. OEDSF processing stops where different users begin to process the data differently.

   Many experiments gather data which can be used in several ways. In most cases, fundamental calibration and correction processes and the extraction of basic information is common to all uses. Additional processing is peculiar to the specific use. For example, surface temperature information is utilized and processed differently when it is used for meteorology, crop yield estimation, or energy balance studies (Albedo). The OEDSF is an effective device when it performs processes common to all users since it eliminates the duplication of these processes by the individual users, or expedites delivery of their data by avoiding the delay they would incur if these common processes were performed in a single ground facility following the return of the shuttle. Further, the chief benefits derived from on-board processing (real-time availability of ancillary data, for example) tend to be realized in the primitive processes, which usually are also the common processes.

2. All on-board processing will be on-line in real or near-real time. Data will not be

Table 4-1. On-Board/Bround Partition Criteria

- ON-BOARD PROCESSES SATISFY ALL USERS
- ON-BOARD PROCESSING IN REAL TIME
- NO LARGE QUANTITIES OF PRE-STORED DATA ON-BOARD
- NO FREQUENT UPDATE OF ON-BOARD PRE-STORED DATA
- NO GROUND REPEAT OF ON-BOARD PROCESSES
- ON-BOARD PROCESSES WELL DEFINED AND STABLE
- CLEAN INTERFACE TO GROUND PROCESSING

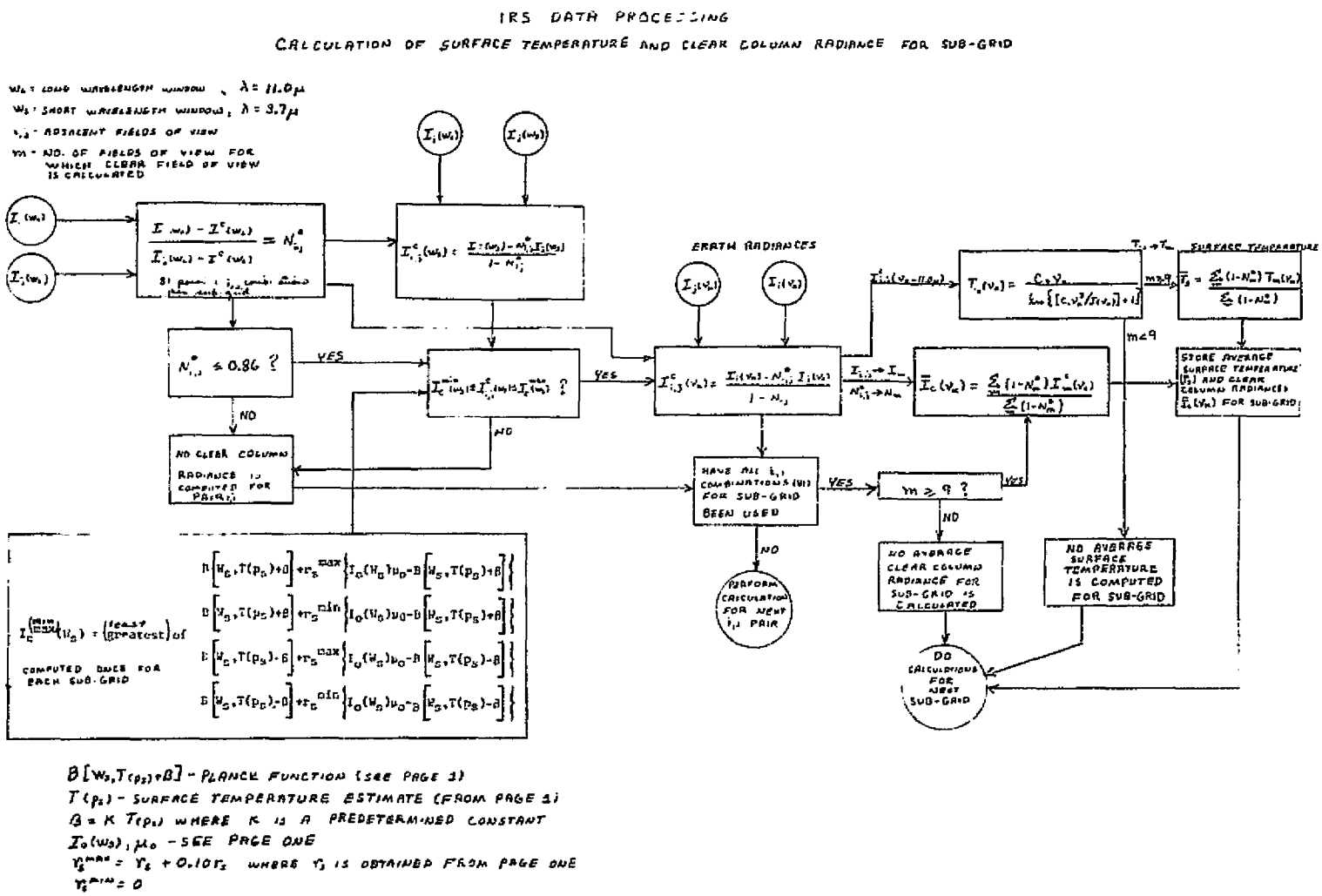

Figure 4-1. Processing Requirements (Typical Example)

REPRODUCIBILITY OF THE ORIGINAL PAGE IS POOR

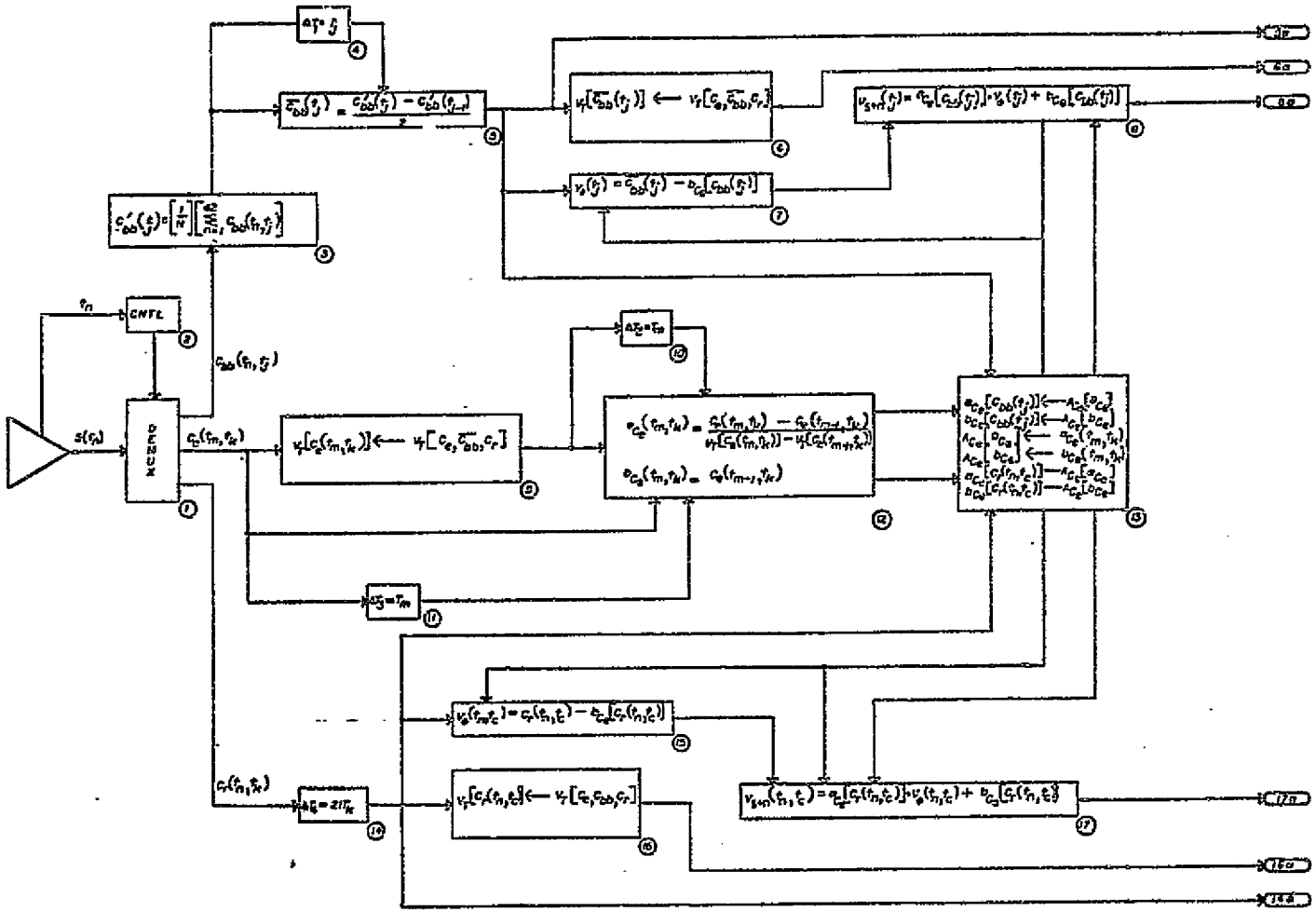

Figure 4-2. Functional Flow Diagrams (Typical Example)

stored for long periods of time and processed in batches. This criterion is derived from two basic tenets of the OEDSF cost-effectiveness concept: It must exploit the features available on-board but not on the ground; it must not perform processes which simply convert ground equipment into flight equipment.

The major feature of on-board processing is the real time availability of ancillary data which includes shuttle location and attitude, instrument characteristics such as pointing parameters and operation (housekeeping), and other calibration data such as sun angle, sun radiance, and the information provided by auxiliary sensors. This feature is exploited only when the real time aspects are utilized. Storing this data and performing batch processing duplicates the operation of present ground processing modes. Further, it requires storage facilities which tend to be large and difficult to qualify for space flight.

3. Processes requiring large quantities of pre-stored data (i. e., look-up) will be performed on the ground. The term "large" is a variable depending primarily on the memory requirements. The criterion derives from the obvious deleterious effects of having to provide large memory capacities on-board. It is supported by the fact that in most cases, the processes requiring these pre-stored data tend to be in the more advanced categories rather than the basic processes which the OEDSF is ideally suited to perform.

4. Processes requiring pre-stored data which must be periodically updated will be performed on the ground; however, infrequent uplinks of updated data which enhances onboard processing is allowable. This criterion is primarily based on the premise that processes requiring regularly updated pre-stored data tend to be the more advanced and specialized processes which no longer benefit from onboard features. It is recognized that there will be many exceptions to this premise so that, although it is a first order guideline, it is subject to re-examination where it eliminates primitive processes. The cost of providing an up-date feature must be weighted against the loss of the benefits of on-board processing.

5. The location of the on-board/ground partitioning must not require any extensive on-board process to be repeated on the ground. There are frequent instances when the data must be reformatted following a series of processes. The data must also be reformatted if it is to undergo recording or transmission following any portion of this series, then again reformatted prior to and following undergoing the remainder of the series. Examples are domain transformation and resampling. In such instances the entire series should be performed on-board or on the ground. If the initial processes in the series strongly benefit from on-board processing, even though the remainder of the series does not then the entire series should be performed on-board.

   Trade-offs must be effected weighing the on-board processing advantages and disadvantages of the initial and subsequent processes versus performing the entire set on the ground.

6. Processes performed on-board must be well defined and not subject to frequent and extensive changes. Experimental and user modeling processes will be performed on the ground. The configuration and qualification of flight equipment is expensive. The benefits to be derived from on-board processing will be realized only if costs are kept within reasonable limits. Frequent changes and modifications requiring extensive rework of the OEDSF will rapidly erode the cost advantages inherent in its functions.

   User models are devices intended to measure the validity of a set of theories by correlating measured facts against predictions derived from the theories. As such they are subject to changes and modifications as the measured data modifies the theory.

The output of this study is a conceptual design for an onboard processor. Such a processor cannot be designed when the processes it is required to perform are not defined or are subject to frequent changes.

7. The characteristics of the data at the partitioning interface must be such as to enable efficient continuation of the processing or utilization. The basic benefit to be derived from the OEDSF is an overall cost effective system. Data delivered to the ground in a state, configuration or format which imposes additional complex or extensive processes to continue its further processing diminishes the system effectiveness. The data output from the OEDSF must be "clean" in the sense that it is compatible and easily interfaces with the next set of processes, and maintains a minimum profile in terms of format, ancillary information needs, and conciseness.

These criteria are more correctly referred to as guidelines since each is subject to exceptions or modifications for any given set of requirements. In certain cases, some of them are contradictory. For example, the use of frequently updated data may eliminate the repeating of extensive processes on the ground. Trade-offs between these guidelines may therefore be one of the first steps in partitioning candidate systems.

A criterion which provides guidance as to allowable on-board processors size, power and memory requirements is conspicuous by its absence. It became evident that any assignment of quantative values to these items would be unnecessarily restrictive on the on-board segment at this time. There are obviously limits for these parameters on the OEDSF as an entity; however, these will be a function of the sum of all the processes required by all the serviced sensors and the apportionment of space and cost to the OEDSF which will, to a large extent, be determined by its value. These limitations will create trade-offs between the extent of on-board processings for given sensors and the number of sensors serviced, for example. Thus, in the process to establish the desirable OEDSF capabilities it is reasonable to exclude from on-board consideration only those processes whose physical needs are obviously excessive, such as a gigabit memory.

The application of these criteria was combined with modifications of the processes to meet the criteria such that the on-board/ground partition tended to maximize the number of processes performed on-board. Table 4-2 summarizes the impact of these criteria on the required processes.

The rationale for each system is indicated below and correlated with the applicable criteria on Table 4-2.

1. ATS - The onboard processing consists of all pre-processing of the data. This includes Calibration, Radiometric Correction and Geometric Correction. The Geometric Correction encompasses X and Y correction based on GNC data providing information on the shuttle attitude and altitude, and on an Earth Model providing information on earth curvature and rotation skew. Ground Control Point (GCP) Correlation is also performed onboard even though this process does not benefit from any inherent on-board processing advantage. The major reason for this decision is that the data must be resampled prior to recording or transmitting to the ground. If GCP correlation were performed on the ground, an additional resampling process would be required following this correction. A double resampling process introduces radiometric errors which reduce the radiometric accuracy below that desired for many applications. Information Extraction processing is performed on the ground because the optimum approach to this task is dependent on the user; i.e., the process to extract wheat acreage is different from that to highlight geological features.

2. IRS - The onboard processing consists of all processing required to derive the raw temperature profile and mixing ratio profile as a function of position. The process is carried this far on-board

Table 4-2. Impact of On-Board/Ground Criteria on Boundary Experiments Processing

CRITERION / EXPER.	1	2	3	4	5	6	7
ATS	PROCESSING RESTRICTED TO CALIBRATION AND PREPROCESSING (CALIBRATION, GEOMETRIC AND RADIOMETRIC CORRECTION)	MODIFIED GCP CORRELATION TO PREDICTIVE APPROACH USING KALMAN FILTER	N/A	ABILITY TO PERFORM GCP CORRELATION WITH 3 POINTS PER FRAME REDUCES REQ'MTS FOR UPDATE TO TOLERABLE QUANTITY	PERFORM GCP CORRELATION ONBOARD TO AVOID A SECOND RESAMPLING PROCESS	NO INFORMATION EXTRACTION PERFORMED ONBOARD	ACHIEVED BY IMPLEMENTATION DATA XMTD IS GEOMETRICALLY AND RADIOMETRICALLY CORRECT.
IRS	OUTPUT OF OEDSF IS RAW TEMPERATURE PROFILES	NEW TECHNIQUES DEVELOPED TO AVERAGE CAL VALUES BEFORE AND AFTER DATA	TEMP. ANALYSIS REQUIRING PREVIOUS DAY'S TEMPERATURES PERFORMED ON GROUND	MODIFICATION OF PROCESS ALLOWS ON-BOARD PROCESSING OF FUNCTION WITHOUT GROUND UPDATE OF PREVIOUS DAY'S TEMPERATURE	ONBOARD PROCESS OBVIATES NEED TO CONVERT RADIANCE TO TEMP. AND VICE VERSA IN SUBSEQUENT PROCESSING	FINAL TEMP. ANALYSIS PERFORMED ON GROUND	DATA XMTD IS TEMP. AS A FUNCTION OF LAT. AND LON.
RADSAT	OUTPUT OF OEDSF ARE σ_o AND T_A WHICH ARE BASIC VALUES	EXTENSIVE UTILIZATION OF REAL TIME ANCILLARY DATA	N/A	N/A	N/A	UTILIZATION OF σ_o AND T_A FOR VARIOUS MODELS PERFORMED ON GROUND	DATA XMTD IS σ_o AND T_A AS A FUNCTION OF LAT. AND LON.
CIMATS	OUTPUT OF OEDSF IS SPECIE CONCENTRATION	EXTENSIVE UTILIZATION OF GNC DATA IN REAL TIME	STORED INTERFEROGRAMS ARE DEEMED SMALL AND VITAL TO BENEFICIAL ONBOARD PROCESSING	N/A	COMPLETE PROCESSING ONBOARD TO OBTAIN SPECIE CONCENTRATION ELIMINATES FURTHER GROUND PROCESSING	N/A	DATA XMTD IS SPECIE CONCENTRATION AS A FUNCTION OF LAT., LON., AND ALTITUDE

REPRODUCIBILITY OF THE ORIGINAL PAGE IS POOR

because the position data required in these computations is readily available in real time. The temperature analysis is performed on the ground because this process requires a complete reference of the previous day's temperatures for each subgrid point at each altitude level. The output of this process is a set of plots (one for each altitude). The process gains nothing from being performed on-board and is more efficiently performed with large general purpose computers.

3. RADSCAT - The on-board processing consists of the computation of the backscatter cross-section (σ_0) and the antenna temperature (Ta) as a function of position (latitude and longitude). Subsequent processing is performed on the ground for a couple of reasons. First, there are several parameters requiring differing processes which can be derived from these two values; second, the procedures for determining these parameters are presently not well defined.

4. CIMATS - The entire processing of the CIMATS data yielding specie concentration as a function of altitude and location is performed on-board. Any subsequent processing involves user models.

4.2 OEDSF REQUIREMENTS

This section establishes the data processing requirements of the OEDSF.

The requirements are derived from the on-board segment of the functional flow diagrams in Section 3. These boundary sensors, by definition, establish both the spectrum extremes for signal characteristics and the extremes of the processing complexity.

The OEDSF must handle many experiments from several disciplines, thus the processing requirements established by the boundary sensors must be generalized, and the processing capability of the OEDSF derived from these requirements must be implemented with sufficient flexibility to perform more than these processes.

The approach taken to determining OEDSF requirements which satisfy this objective is described below. The closed functions depicted in the functional flow diagrams are not generally the process requirement. These closed functions are the mathematical relationship which the OEDSF must model. Consequently, each relationship must be described as a set of functions interrelated and generally termed an algorithm. Ramifications result based on the level of decomposition of the closed function. The depth of the decomposition is a variable which must be selected to optimize the combination of the conflicting objectives of general purpose and low cost. If the decomposition is too shallow, a special purpose, sensor unique function, results. If the decomposition is too deep, a general purpose machine results that is too cumbersome from an implementation and user standpoint.

The detailed work performed in this task is contained in Appendix A of the Task 2 report.

The required processing functions tabulated on the flow diagrams were extracted and converted to an implementation process; i.e., the actual process which will implement the required process. Algorithms

were then developed to perform this process. The steps of the algorithms were then grouped as the set of functions required.

Requirements which create only functions already developed are not considered again. The vast majority of functions developed in Appendix A of the Task 2 report were provided by the early processes of the CIMATS and the IRS. The only new functions supplied by the RADSCAT, for example, was Matrix Multiplication. Processes required in handling housekeeping and command data were also considered and found to be well within the envelope defined by the data processes.

The required functions were generalized and grouped into process categories. Table 4-3 tabulates the 18 functions derived from Appendix A grouped into the four process categories.

Table 4-4 summarizes the characteristics of the boundary sensors.

Table 4-3. OEDSF Functions Required

1. TRIGNOMETRIC FUNCTIONS
   - a. Sine
   - b. Cosine
   - c. Tangent
   - d. Cotangent
   - e. Secant
   - f. Cosecant
   - g. Inverse Sine
   - h. Inverse Cosine
   - i. Inverse Tangent
2. EXPONENTIAL FUNCTIONS
   - a. Exponential
   - b. Natural Logarithm
3. ALGEBRAIC FUNCTIONS
   - a. Algebraic addition with accumulation capability
   - b. Signed multiplication with reciprocal input capability
4. CONTROL FUNCTIONS
   - a. Multiplexing
   - b. Demultiplexing
   - c. Storage and Retrieval
   - d. Counting
   - e. Delay

Table 4-4. Boundary Sensor Characteristics

SENSOR	PROCESSES/CHANNEL			FREQUENCY IN BPS		CHANNELS	WORD SIZE	DATA BASE (BITS)
	ARITH	TRIG	LOG/EXP	TOTAL	CHANNEL			
ATS	82	15	1	120×10^6	1×10^6	120	8 BITS	100K
RAD/SCAT	213	67	0	15×10^3	15×10^3	1	10 BITS	10K
IRS	131	0	4	3.3×10^3	1.99×10^2	17	18 BITS	250K
CIMATS	31	19	0	2.904×10^3	2.904×10^2	10	12 BITS	170K

4.3 OEDSF GROUND SYSTEM REQUIREMENTS

This section examines the requirements imposed on the ground segment of the four boundary experiments data systems as a result of the partitioning. The intent of this examination is to enable a gross evaluation of the effectiveness of the entire system to ensure that processes performed on-board and the location of the on-board/ground partition do not reduce the advantages of on-board processing by creating new and extensive processing requirements on the ground. The partitioning location is summarized in Figure 4-3.

ATS - The data provides information useful to many disciplines such as agriculture, forestry, geology, urban planning, and hydrology. The information required is extracted from data provided in several spectra, over a period of time, and correlated with other information obtained from exogeneous sources. Figure 4-4 depicts a generic data processing system indicating the onboard/ground partition for the ATS system.

The ATS data input into this system undergoes several processes which render it useful for the particular application. These are, in general, a function of the specific application; however, all applications share a common need which define the basic processing of the data. These are: calibration, radiometric correction, and geometric correction. These processes will be performed on-board; all subsequent processes will be performed on the ground. The data supplied to the ground is radiometrically and geometrically corrected digital data. The processes which may then be performed on the ground are as various as the uses of the data.

Typically they consist of information extraction which may be performed by thematic techniques, typified by the Image 100, an interactive thematic extraction processor. (The reader is referenced to the OEDSF Task I report, Pages A-41 to A-49). This is followed by user modeling which combines this information with information obtained from other sources to create a final output product. For example, ATS data

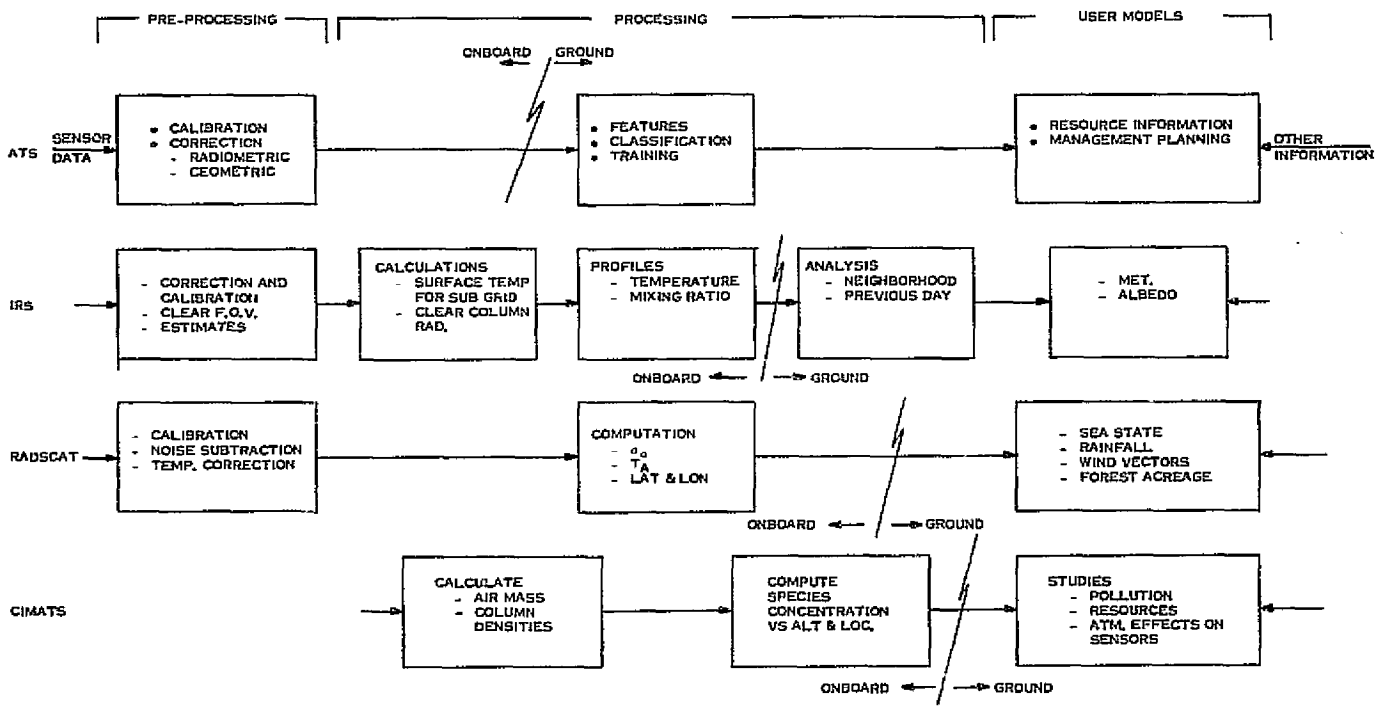

Figure 4-3. On-Board/Ground Partitions

REPRODUCIBILITY OF THE
ORIGINAL PAGE IS POOR

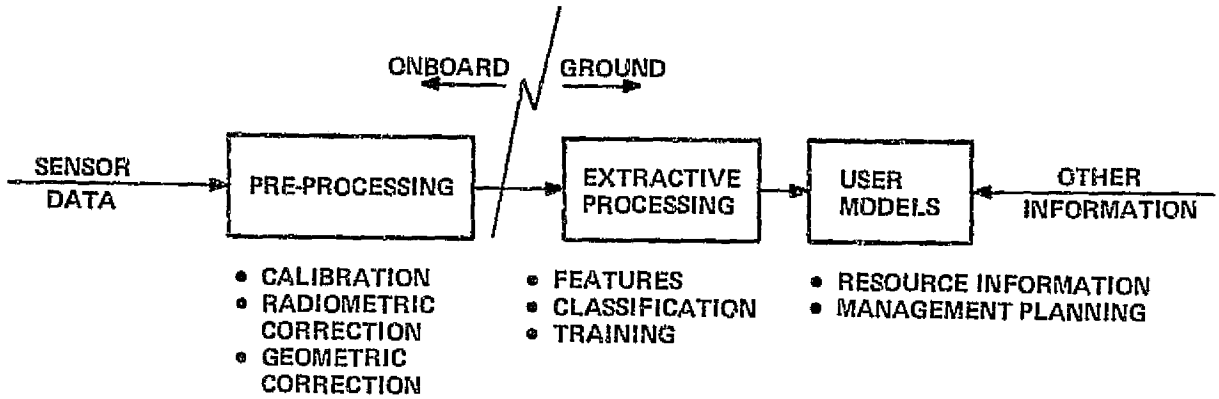

Figure 4-4. ATS Data System

providing information on crop acreage and health may be combined with meteorological information providing temperature and soil moisture to determine crop yield.

The specific ground requirements which may be specified relate to the input interface. The output of the OEDSF will usually be recorded on a High Density Digital Tape (HDDT) on the ground. The ground facility must be capable of converting this tape to a Computer Compatible Tape (CCT) or directly to imagery. These requirements would exist without the OEDSF, since raw ATS data would be recorded on an HDDT. The ground segment requirements of the system are thus reduced to the extractive and user model requirements by the elimination of the need to preprocess the data.

IRS - The IRS provides atmospheric temperature profiles and earth surface temperature as a function of location. This information may then be used in user models to support various disciplines, in particular, meteorology. The basic process to extract the information from the sensor data, and the location of the on-board/ground partition are indicated in Figure 4-5.

The data delivered to the ground are the raw temperature profiles and mixing ratio profiles as a function of location.

The ground system must perform the surface temperature analysis. This process is identical to that performed at present on the HIRS data, and the same program developed for that phase of the processing may be used. One step has been added as a result of the method used to implement the on-board processing. If an unsufficiently clear field of view exists in a sub-grid, a flag is set, and a bilateral estimate temperature value based on the average of the four nearest qualifying neighbors is used in further processes. The present approach (all ground) is to use the previous day's temperature for this sub-grid. The use of the estimated temperature instead of the previous day's temperature in the data processing produces at worst a second order error; the estimated temperature can be replaced with the previous day's temperature

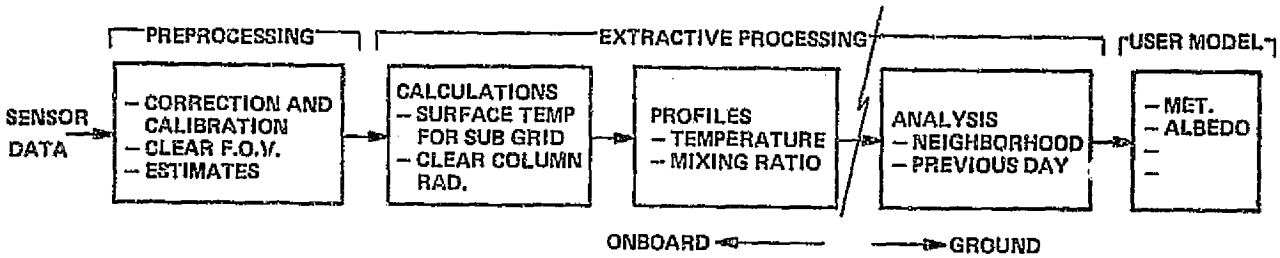

Figure 4-5. IRS Data System

during the analysis operation by a simple modification of the existing program. Presently the analysis program performs various checks on each sub-grid temperature and replaces it with the previous day's temperature if it fails any of these. The modification consists solely of adding a flag set check to the other checks, and considering a set flag as a check failure.

All other ground processing, including user models, are unaffected and retain their present requirements.

RADSCAT - The RADSCAT is an instrument consisting of a radiometer and a scatterometer which produce data from which basic parameters of their target may be derived. These basic parameters are, the back-scatter crossection (σ_0), and the target temperature (T_t) The computation of the target temperature is based on the radiometer antenna temperature (Ta) and uses several other data (which may include (σ_0) obtained from exogeneous sources. The complexity of this process, depends on the accuracy of T_t desired. For several applications Ta is sufficient; thus the computation of T_t is a user model function. These two parameters may be used singly or in conjunction with each other (or with other data) to produce information on several characteristics of the target. Examples of information derived from these parameters are: Sea wave height, wind velocity and direction, soil moisture, crop stress, geological surface features, water salinity and temperature, and forestry management parameters.

The generic data processing diagram for the RADSCAT is shown in Figure 4-6.

The present RADSCAT ground system consists of two basic entities. The preprocessing and processing are performed at a central facility. The output of this facility are σo and Ta as a function of position. This data is distributed to various users most of whom are presently in the experimental phase; i.e., developing and evaluating models which produce the final information in their own facility.

The OEDSF performs the preprocessing and processing functions and outputs the identical product as that supplied by the present facility; hence, there is no impact on the user models and subsequent processing of the RADSCAT data by the OEDSF.

CIMATS - The CIMATS produces data which enables the determination of the column density of a number (approximately 9) of gas constituents of the atmosphere as a function of altitude and location.

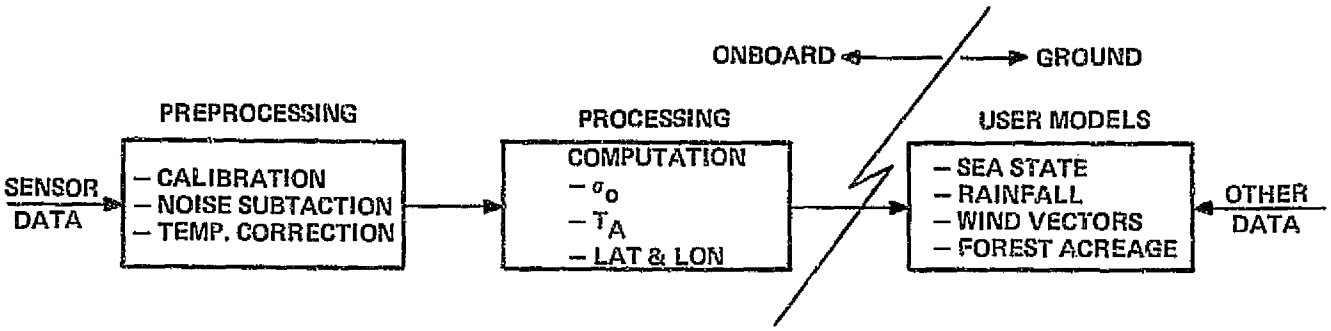

Figure 4-6. RADSCAT Data System

The initial utilization of this information is the study of pollution. Corroborative measurements made from the ground are used in this study. There will undoubtedly be many other uses of the CIMATS information related to the concentration of various gases singly or in group. These are all user model functions.

The generic processing flow of the CIMATS data is shown in Figure 4-7.

The CIMATS pre-processing function is unique in that it is really the early phases of information extraction rather than the more classical calibration and correction functions associated with this term.

The entire information extraction process is performed on-board. The input to the ground system are the specie concentrations as a function of altitude and location. These are submitted to the user models which are undefined at this time. The format of the supplied data will be High Density Digital Tapes.

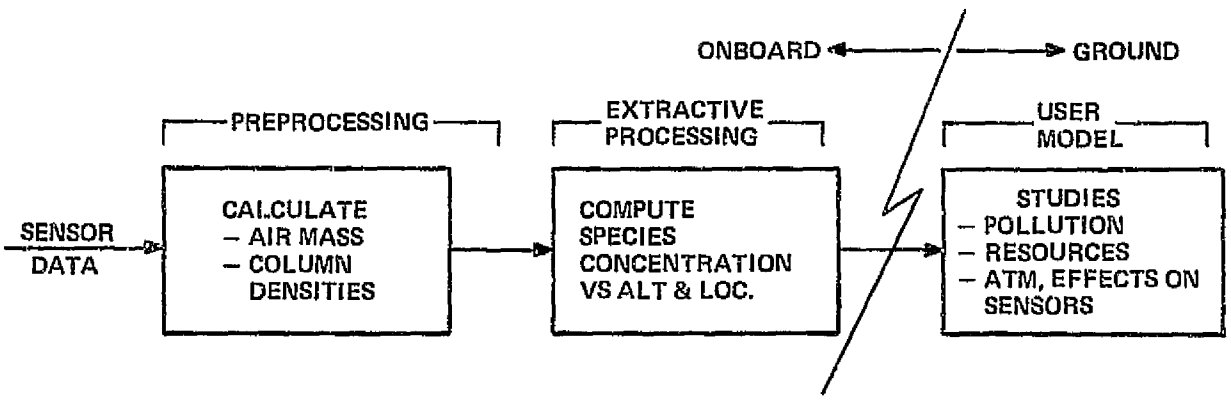

Figure 4-7. CIMATS Data System

SECTION 5

COMPOSITE SENSORS

The boundary sensors discussed in Section 3 exhibit upper limits of processing complexities and/or data rates. The OEDSF must provide data processing support to payloads made up of instruments which, in general, fall within the boundaries of these "tall poles". In order to derive realistic requirements for the OEDSF in supporting typical payloads a "typical" sensor was developed. It was assumed that an average payload will contain 20 of these "typical" sensors. Since this sensor was derived from a large number of specific sensors, we have named it the "Composite" sensor.

The derivation of the requirements of the composite sensor was accomplished as follows: 36 instruments which are candidates for near-term shuttle flights were considered with respect to both their data rates and processing requirements complexity. The data rate of the composite sensor A is the average of the rates of all 36 instruments. The processing complexity was determined by: (a) assigning each of the 36 sensors into a "similar to" group determined by the four boundary sensors; (b) averaging the processing requirements based on the number of sensors assigned to each category and the specific requirements of these categories, i.e., the boundary sensors. The result of this analysis is shown in Figure 5-1.

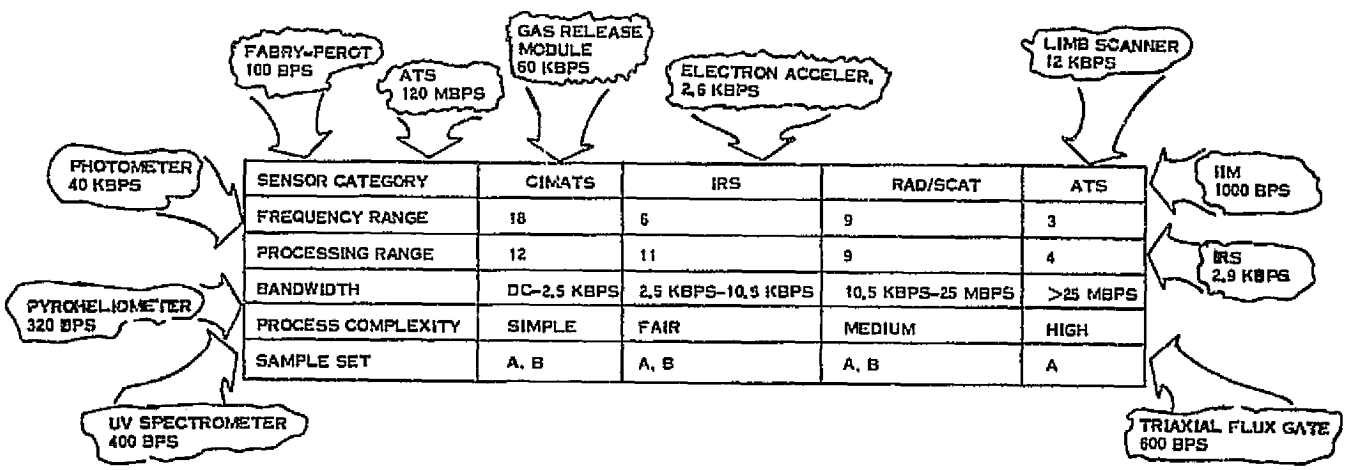

SENSOR CATEGORY	CIMATS	IRS	RAD/SCAT	ATS
FREQUENCY RANGE	18	6	9	3
PROCESSING RANGE	12	11	9	4
BANDWIDTH	DC–2.5 KBPS	2.5 KBPS–10.5 KBPS	10.5 KBPS–25 MBPS	>25 MBPS
PROCESS COMPLEXITY	SIMPLE	FAIR	MEDIUM	HIGH
SAMPLE SET	A, B	A, B	A, B	A

Figure 5.1. Composite Sensor Derivation

REPRODUCIBILITY OF THE ORIGINAL PAGE IS POOR

It is evident that a very small number of very high frequency instruments such as the Advanced Technology Scanner, and the Synthetic Aperture Radar distort the average rate significantly from average payloads where these instruments are not flown. Accordingly, a composite sensor B was derived which excludes these high data rate sensors and is more representative of typical payloads. Analyses discussed in Section 9 indicate that these very high rate sensors require most of the capability of a full OEDSF array and should, therefore, be treated separately from the rest of the payload. Table 5-1 summarizes the characteristics of Composite Sensors A and B.

These processing requirements combined with the characteristics of the boundary sensors determine the capabilities required from the OEDSF. These are summarized in Table 5-2 where an operation is defined as a function that is executed based on a single instruction. Typical operations are:

- $f(x) = ax + b$
- $f(x) = \text{cosine } x$
- $f(x) = A \exp(x)$
- $f(x) = X + Y$

Table 5-1. Composite Sensor Characteristics

Parameter	Composite Sensor A	Composite Sensor B
Frequency	3.0 Mega [illegible]s/Second	190 Kilo Bits/Second
Arithmetic Processes (Per Word)	1250	1160
Trigonometric Processes (Per Word)	288	250
Exponential Processes (Per Word)	36	40
Number of Channels	18	10
Word Size (Bits)	12	12
Buffer Size Required (Bits)	84K	93K
Memory Size - Required (Bits)	118K	131K

Table 5-2. Machine Requirements

PARAMETER	REQUIREMENT
• BANDWIDTH	D.C. TO 120 MEGA BITS/SECOND
• OPERATIONS PER SECOND	
- COMPOSITE SENSOR A	2.2×10^7 OPERATIONS/SEC
- COMPOSITE SENSOR B	2.4×10^6 OPERATIONS/SEC
• PROCESS DISTRIBUTION	
- ARITHMETIC	80% OF CAPABILITY
- TRIGONOMETRIC	18% OF CAPABILITY
- EXPONENTIAL	2% OF CAPABILITY
• STORAGE REQUIREMENT	
- BUFFER/SENSOR A	84 KILO BITS
- DATA BASE/SENSOR A	118 KILO BITS
- BUFFER/SENSOR B	93 KILO BITS
- DATA BASE/SENSOR B	131 KILO BITS
• PORT REQUIREMENT	
- INPUT	18-12 BIT PORTS (MINIMUM)
- OUTPUT	18-12 BIT PORTS (MINIMUM)

SECTION 6

ARCHITECTURE OF THE OEDSF

By definition, architecture is the art or science that pertains to the method or style in which some physical structure is built. In electronic signal processing, an architecture is more explicitly defined as the method of establishing the inter-signal relationship with respect to the processes or transfer functions comprising the system. At the system level, architecture defines the processing philosophy and dimensional distribution. Processing structures are further characterized as functions of time.

The various architectures considered for the OEDSF are described in detail in the OEDSF Task 2 Report dated December 1975. The following is a summary of this report. The applicable architectures were reduced to the following:

For the Central Processing Unit:

- Augmented small computer
- Pipeline
- Serial
- Matrix (or array)

And for the System Level:

- Centralized
- Distributed
- Structured

The characteristics of these architectures are summarized in Figures 6-1 through 6-7 and Tables 6-1 through 6-4.

These characteristics were matched to the requirements of the OEDSF shown in Table 6-5.

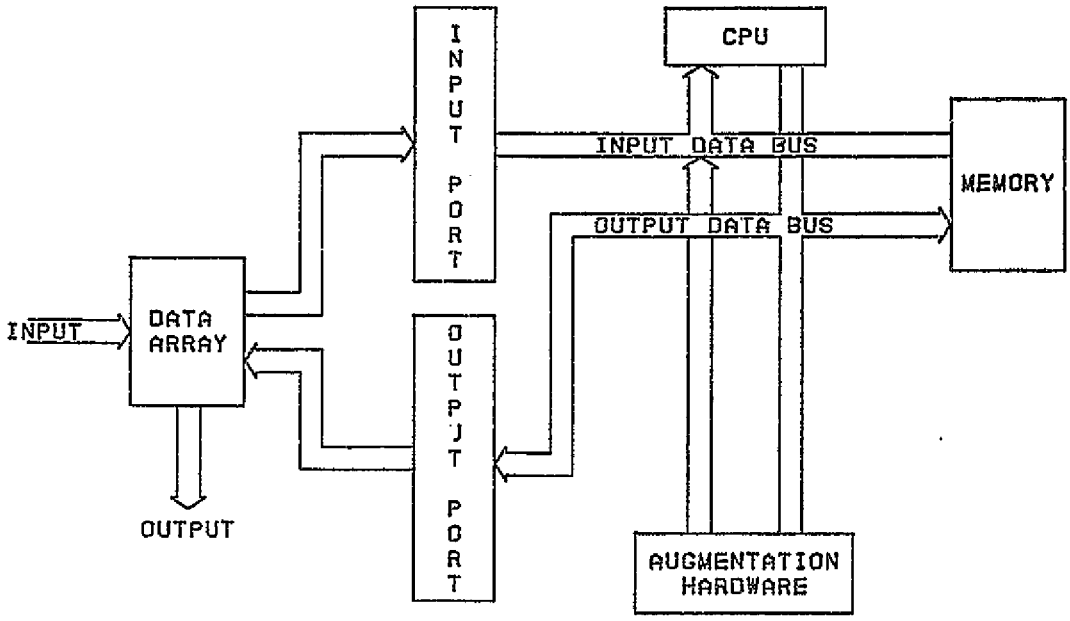

Figure 6-1. Augmented Computer Architecture

Table 6-1. Augmented Small Computer

Advantages	Disadvantages
1. Any Algorithm can be Implemented Regardless of the Complexity	1. Operational Speed is Limited By Basic Machine Time
2. System Modifications are Facilitated and Dynamic in Nature	2. Applicability is Determined by the Data Rate and Format in Conjunction with the Required Algorithms
3. System Modifications are Reversible and not Time Consuming	3. Internal Processing is serial
4. System Structures, Flows, and Interactions are not Rigidly Defined	4. Software is Dedicated to a Specific System
5. Uncertainties may be Incorporated, Modeled, and Altered without Ramifications on the System	5. Algorithm Complexity Establishes Memory ar l Power Requirements
6. Documentation is User Oriented Rather than Designer Oriented	6. Machine Power is Determined by the Machine Architecture and the instruction Set
7. Interfacing is Standardized and Documented	
8. Powerful Decision Making and Sequencing Capability	

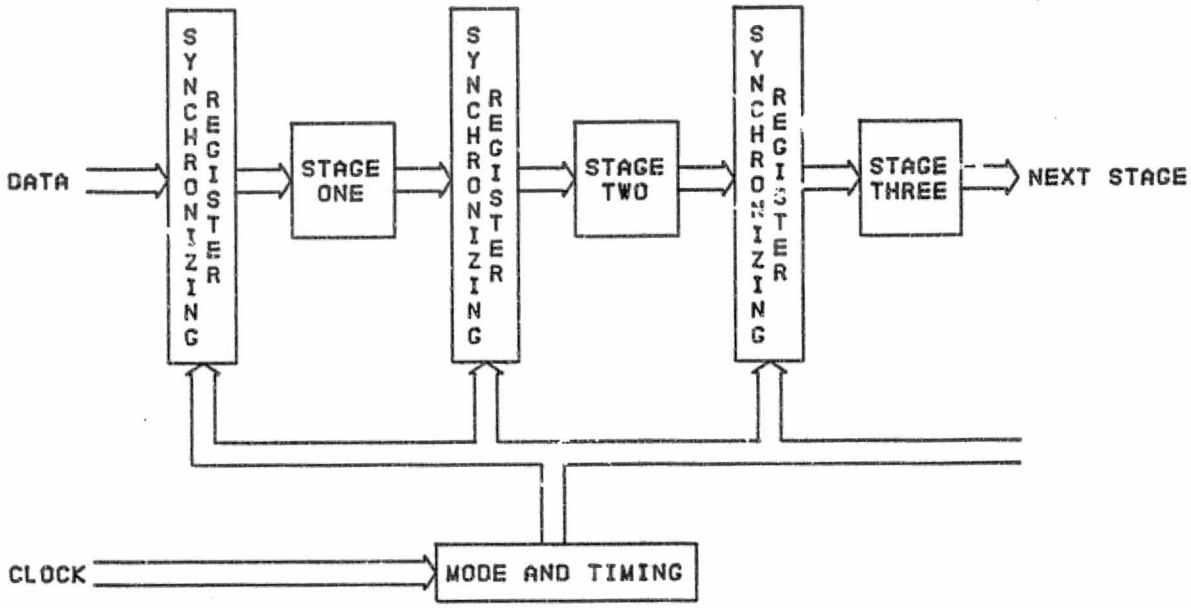

Figure 6-2. Pipeline Architecture

Table 6-2. Pipeline Architecture

Advantages	Disadvantages
1. High Speed Processing Directly Proportional to the Number of Stages	1. Requires Efficient Algorithms Easily Decomposed to Simple Sequences
2. Speed of Operation is Independent of the Processes Used	2. Normally Complex in Design and Realized in Special Purpose Hardware, Firmware, and Software
3. Control of the Pipeline is Simple and Independent of the Complexity of the Processing	3. Inefficient on Small Arrays of Data
4. The Architecture is Modular at Every Processing Level	4. The Structure must be Either Output Coupled or Input Coupled
5. Adaptive to Mathematical and Information Processing	
6. Possesses Unlimited Growth Potential	

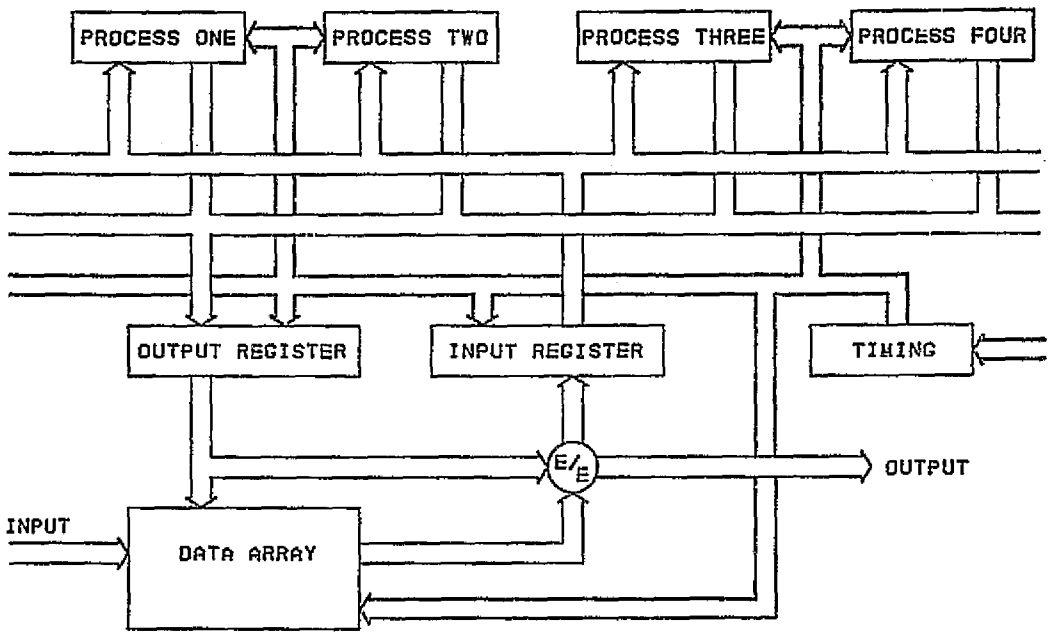

Figure 6-3. Serial Architecture

Table 6-3. Serial Architecture

Advantages	Disadvantages
1. Limited Hardware Requirement	1. Low Operational
2. High System Level Efficiency	2. Inefficient at the Processing Level
3. Capable of Complex Algorithms	3. Limited Growth Potential
4. Economical	4. Time-Shared Bus Orientation
5. Electronic Modification of Signal Flow	

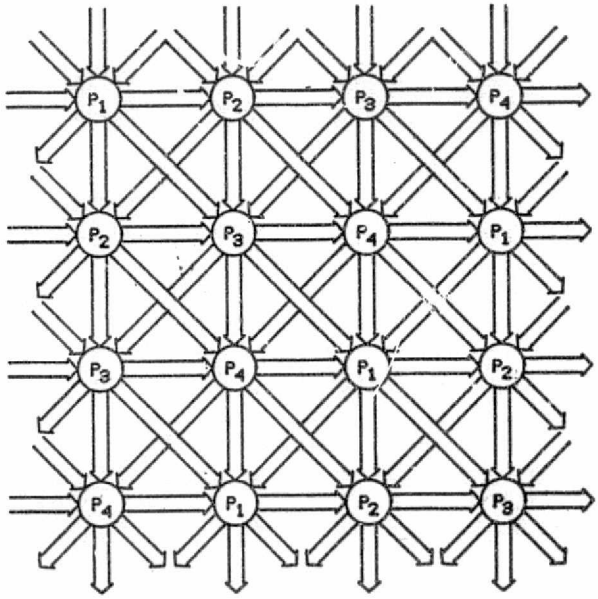

Figure 6-4. Array Architecture

Table 6-4. Array Architecture

Advantages	Disadvantages
1. Capable of Complex Algorithms	1. Effective only with Large Arrays of Data
2. High Operational Frequency on Large Arrays	2. Complex Fabrication
3. Simultaneous Word Processing of Large Blocks of Data	3. Low Gate Efficiency
4. Electronic Signal Flow Modification	
5. Elimination of Feedback Loops	
6. Control and Programming Simplicity	

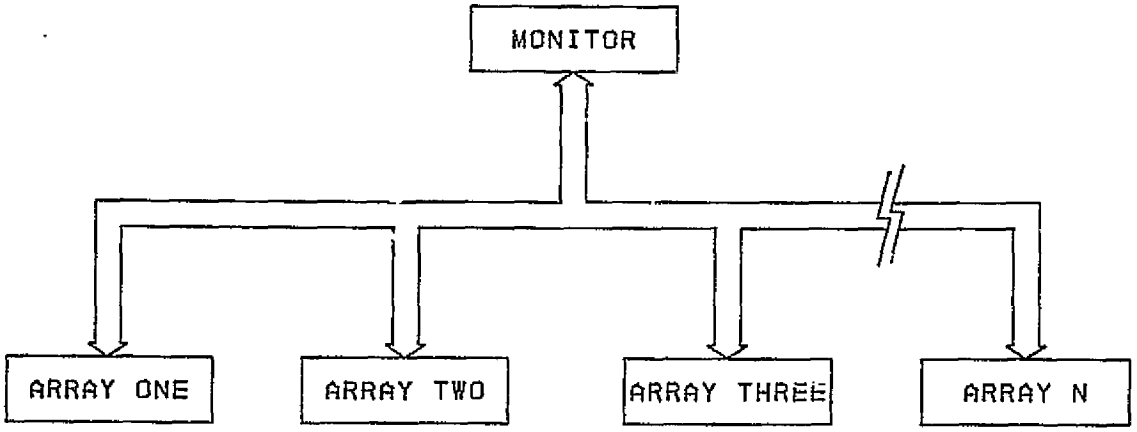

Figure 6-5. Centralized Architecture

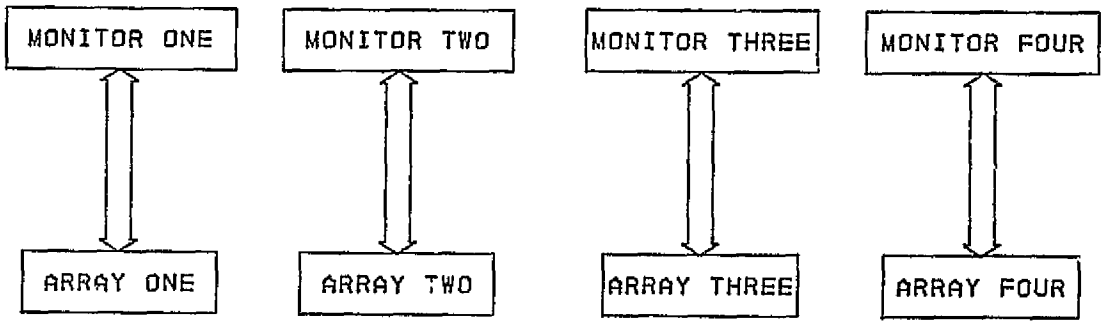

Figure 6-6. Distributed Architecture

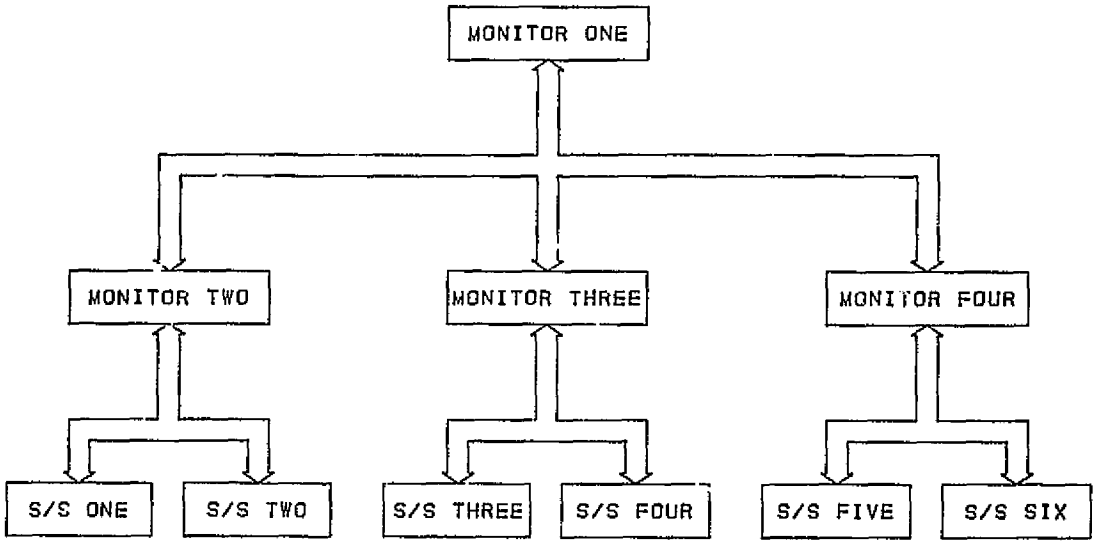

Figure 6-7. Structured Architecture

REPRODUCIBILITY OF THE
ORIGINAL PAGE IS POOR

6.1 OEDSF ARCHITECTURE DRIVERS

Table 6-5. OEDSF Architecture Drivers

- Multiple Experiments
- High Data Rates
- Real Time Processing
- Flexible Configurations
- Physical Characteristics
- User Orientation
- Spaceflight Qualification
- Growth Potential

1. Multiple Experiments. The shuttle will carry payloads typified by several missions in different disciplines each of which will use multiple instruments. The OEDSF must then be capable of simultaneously processing the data of many instruments which are uncorrelated with respect to processes, data rates, or format.

2. High Data Rates. The OEDSF is designed to accommodate the high data rate instruments which are candidates for shuttle flights. These include the Advanced Technology Scanner and Synthetic Aperture Radar which output data in excess of 100 megabits per second.

3. Real Time Processing. The onboard/ground trade-offs discussed in section 4 conclude that onboard processing must be performed in real time if it is to be effective. The OEDSF must thus be capable of accommodating the required processes and data rates output by the sensors in real time.

4. Flexible Configurations. The shuttle flies repeatedly with different missions and sets of instruments. The OEDSF must rapidly and inexpensively be reconfigured to accommodate each flight complement.

5. Physical Characteristics. The shuttle is large but its accommodations have already been allocated to the many candidate experiements. The OEDSF must present a low profile in terms of size, weight and power requirements to present an attractive alternative to ground processing.

6. User Orientation. The OEDSF is conceived to primarily benefit the user in terms of timeliness of data availability, data quality, and cost. These imply a system which must readily interface with the user in terms of both its inputs and its outputs. Specifically, the programming of the OEDSF must be simple, inexpensive, and oriented towards the user's normal methods of operation.

7.. Space Flight Qualification. The OEDSF is a central facility in a manned spaceflight environment. This circumstance implies reliability and safety features which must be inherent in the design of the facility and in its component parts.

8. Growth Potential. The OEDSF must be able to accommodate future generations of instruments and to assimilate advances in the state of art pertaining to its own structure. For example, the design should enable an LSI implementation when this technology becomes applicable to the OEDSF design.

Table 6-6 indicates the trade-off evaluation given to each of the parameters of importance to the OEDSF.

High speed requirements indicate a pipeline approach; the need to service multiple sensors expand this to multiple pipelines; and the changing sensors configuration dictate that this set of pipeline processors be reconfigurable. The solution to the requirements thus rapidly converge on an architecture which is a set of programmable pipelines.

This architecture can be constructed in several ways as indicated in Figure 6-8 where each block performs a different function; i.e., E1 is a function different from E2 which is different from E3. The configuration selected is that shown in Figure 6-9. The blocks labeled A perform Algebraic functions, those labeled T perform Trigonometric functions, those labeled E perform exponential functions. The specific functions are described in Section 7. The population density and the location of each type function was determined by the analyses of the processing requirements defined in Sections 4 and 5.

The concept of this architecture is best understood by application to an example.

A sub-routine required for the sub-limb longitude and latitude calculations is used. The calculation requires the solution to the equation

$$a(t) = \cos^{-1}\left\{ 1 + \cot \lambda_1 \cot \lambda_2 \cos (\phi_2 - \phi_1) \right\}$$

The variables λ_1, λ_2, ϕ_2, and ϕ_1 have been previously defined. This process is performed in five machine cycles as follows:

1. Machine Cycle One. The array configuration during the first machine cycle is shown in Figure A. Three processing elements are required. Processing Element (PE_{11}) is an arithmetic element which computes the difference between the sub-satellite longitude (ϕ_1) and the solar longitude (ϕ_2). Processing Elements (PE_{12} and PE_{21}) are trigonometric processing elements which compute the cotangent of the solar latitude and sub-satellite latitude respectively. Each machine cycle is subdivided into control states so that during the last state the computed variables are placed on the array bus.

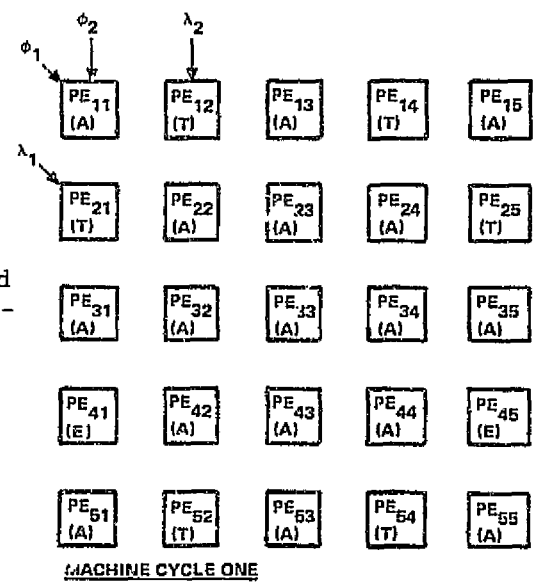

Figure A.

REPRODUCIBILITY OF THE ORIGINAL PAGE IS POOR

Table 6-6. Comparison of Processing Architectures

EVALUATION CRITERIA	SMALL COMPUTER	SERIAL	PIPELINE	ARRAY
MULTIPLE SENSORS I/O CAPABILITY	POOR	POOR	POOR	EXCELLENT
OPERATIONAL SPEED	POOR	FAIR	EXCELLENT	EXCELLENT
FLEXIBILITY OF PROCESSING	EXCELLENT	GOOD	POOR	EXCELLENT
GATE UTILIZATION EFFICIENCY	POOR	POOR	EXCELLENT	GOOD
REAL TIME CAPABILITY	POOR	FAIR	EXCELLENT	EXCELLENT
IMPLEMENTATION OF COMPLEX ALGORITHMS	EXCELLENT	GOOD	GOOD	GOOD
USER ORIENTATION	EXCELLENT	FAIR	FAIR	EXCELLENT
ADAPTABILITY TO FLIGHT ENVIRONMENT	GOOD	GOOD	GOOD	GOOD
GROWTH POTENTIAL	GOOD	FAIR	EXCELLENT	EXCELLENT

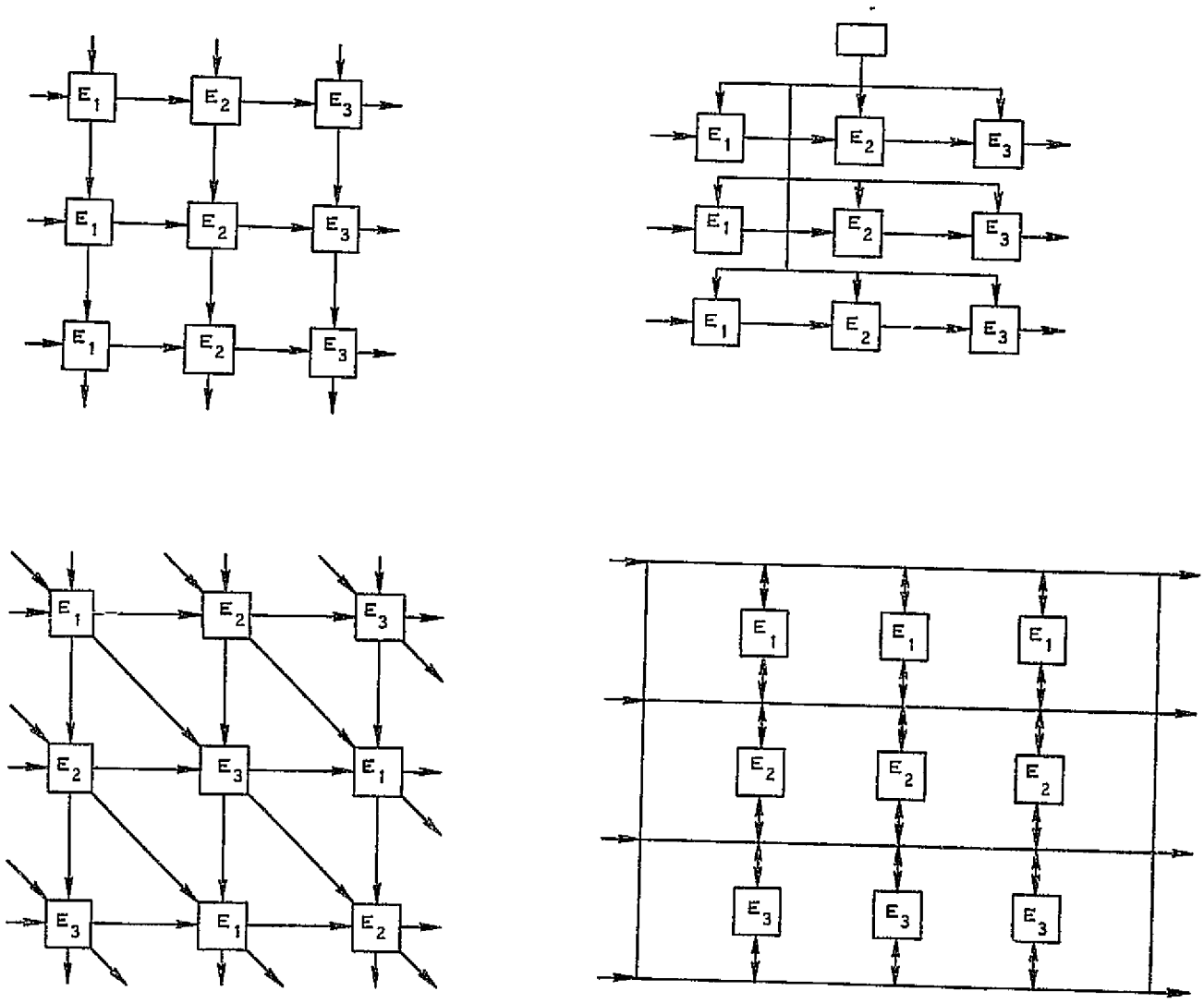

Figure 6-8. Potential Array Structures

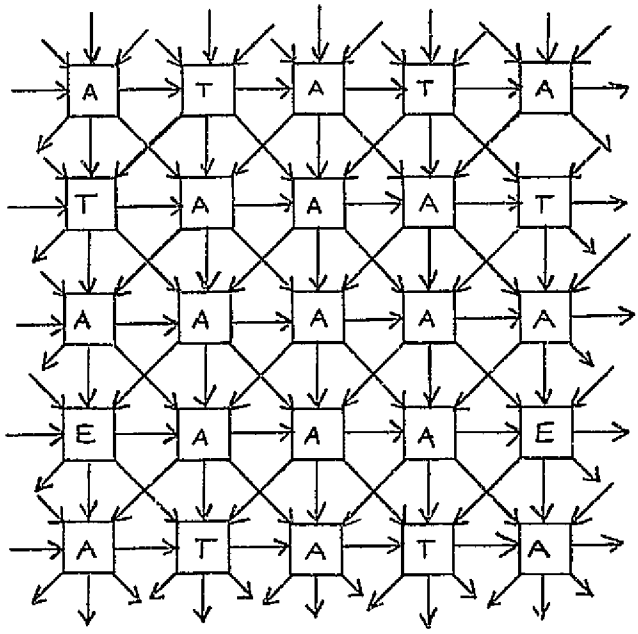

Figure 6-9. Array Structure

The program for the first machine cycle is

$MC_1 = PE_{11}\ ([B_{11}] - [C_{11}]);\ PE_{12}\ (COT\ [C_{12}]);\ PE_{21}\ (COT\ [B_{21}])$

where B_{xy}, and C_{xy} are the input and output ports as shown in Figure 6-16.

2. Machine Cycle Two. The output state of machine cycle one reconfigures the array for the next machine cycle as shown in Figure B.

The second machine cycle during the first sensor data period requires two processing elements to execute

$MC_2 = PE_{21}\ (COS\ [PE_{11}]);$

$PE_{22}\ ([PE_{21}]\ X\ [PE_{12}])$

forming the partial solutions

- $[PE_{21}] = COS\ (\phi_2 - \phi_1)$
- $[PE_{22}] = COT\ \lambda 1\ o\ COT\ \lambda 2$

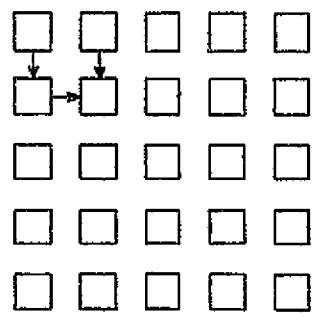

MACHINE CYCLE TWO

Figure B.

Processing Elements PE_{11} and PE_{12} are free for other assignments during this cycle. The last state of the cycle reconfigures the array.

3. Machine Cycle Three. The third machine cycle, shown in Figure C, requires a single processing element, i.e., PE_{32} to execute the instruction

$$MC_3 = PE_{32} \left(\left[PE_{21}\right] X \left[PE_{22}\right] \right)$$

generating

- $$\left[PE_{32}\right] = COT\ \lambda_1\ COT\ \lambda_2\ COS\ (\phi_2 - \phi_1)$$

4. Machine Cycle Four (Figure D). This machine cycle requires a single processing element PE_{42} to compute

- $$\left[PE_{42}\right] = 1 + COT\ \lambda_1\ COT\ \lambda_2\ COS\ (\phi_2 - \phi_1)$$

based on the instruction

$$MC_4 = PE_{42} \left(\left[PE_{32}\right] + 1 \right)$$

The unity offset is fetched internally from a scratch pad or a hardwired function during the execution of the operation.

5. Machine Cycle Five (Figure E). This cycle is the final cycle required to compute the dummy variable a(t). Processing Element PE_{52} is a trigonometric processing element required to compute

$$\left[PE_{52}\right] = COS^{-1}\left[1 + COT\ \lambda_1\ COT\ \lambda_2\ COS\ (\phi_2 - \phi_1)\right]$$

based on the instruction

$$MC_5 = \left[PE_{52}\right] \left(COS^{-1} \left[PE_{42}\right] \right)$$

This sub-routine required five machine cycles to operate on the first data word. It is repeated every 58 words. The process required 1.25 microseconds and was executed using double precision.

A full-blown example of the entire processing of a sensor is given below. The sensor is the Correlation Interferometer for the Measurement of Atmospheric Trace Species (CIMATS).

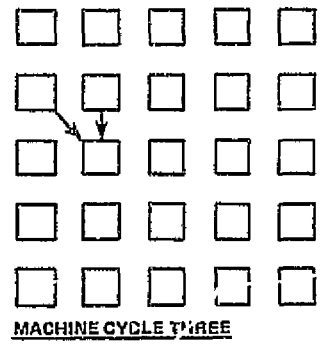

Figure C.

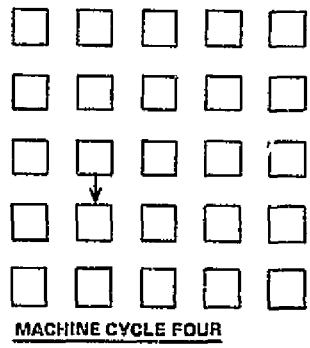

Figure D.

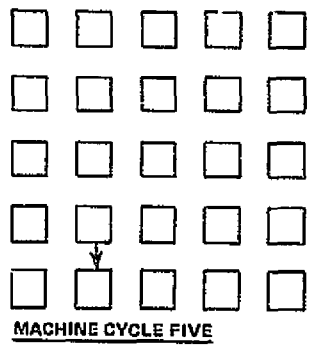

Figure E

REPRODUCIBILITY OF THE ORIGINAL PAGE IS POOR

CIMATS is an atmospheric sensor that is utilized in determining gaseous pollutant concentrates. The primary system driver for the sensor is the correlation process required for an interferogram. The sensor is a relatively low frequency instrument that generates four output variables:

- Thermal column density
- Non-Thermal column density
- Thermal spec.. concentrations
- Non-Thermal specie concentration

utilizing the process flow chart shown in Figure 6-10. This process flow chart was translated into a generic machine flow for real time data processing during Task II. The generic machine processing is shown in Figure 6-11. The real time relationships for the sensor provide the basis for programming the OEDSF.

The generation of the four output variables based on the raw sensor data results in an approximate 60 to 1 data reduction. The transformation places the OEDSF in an information processing role.

The initial requirement is to investigate the processes to isolate loops and shared parameters. (At the multi-sensor level, many functions are also shared between sensors so that a single computation is required).

The process flow chart for the CIMATS sensor on a programmable machine is shown in Figure 6-12. The flow is a machine flow and not a software flow chart. The primary purpose of this diagram is to minimize the sequential iterations and allocate the machine capacity. The sensor requires three major sequences and two loops to generate the required output parameters. The conversion from each flow to the machine flow is important to determine:

- Program size
- Machine loading
- Machine efficiency
- Hardware allocation

The OEDSF, like any machine, is finite and characterized by finite parameters. The sensor must be mated to the machine in conjunction with other sensors and a resource allocation assessed. The major considerations on any machine are:

- Input/output port availability
- Data transfer rate

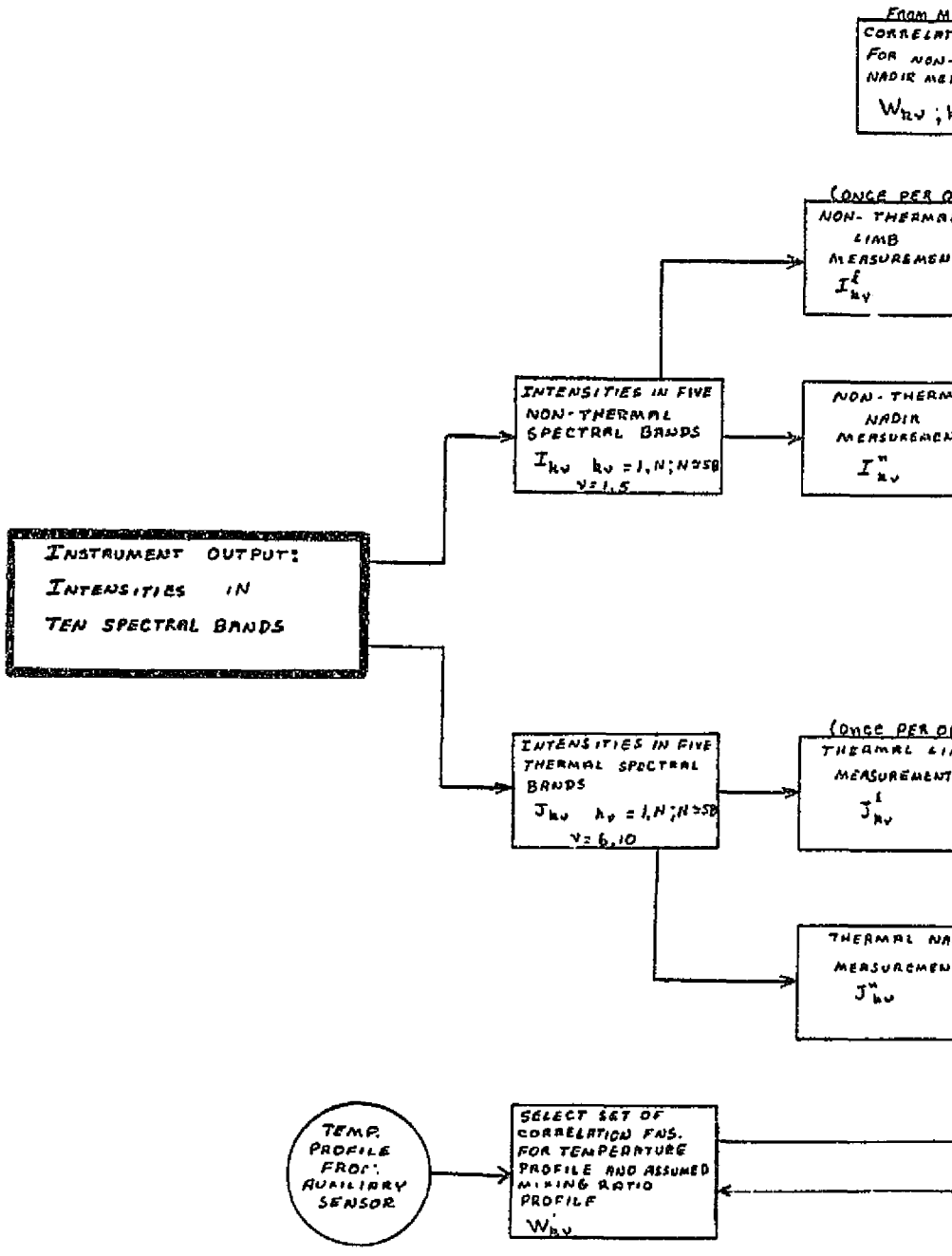

FOLDOUT FRAME

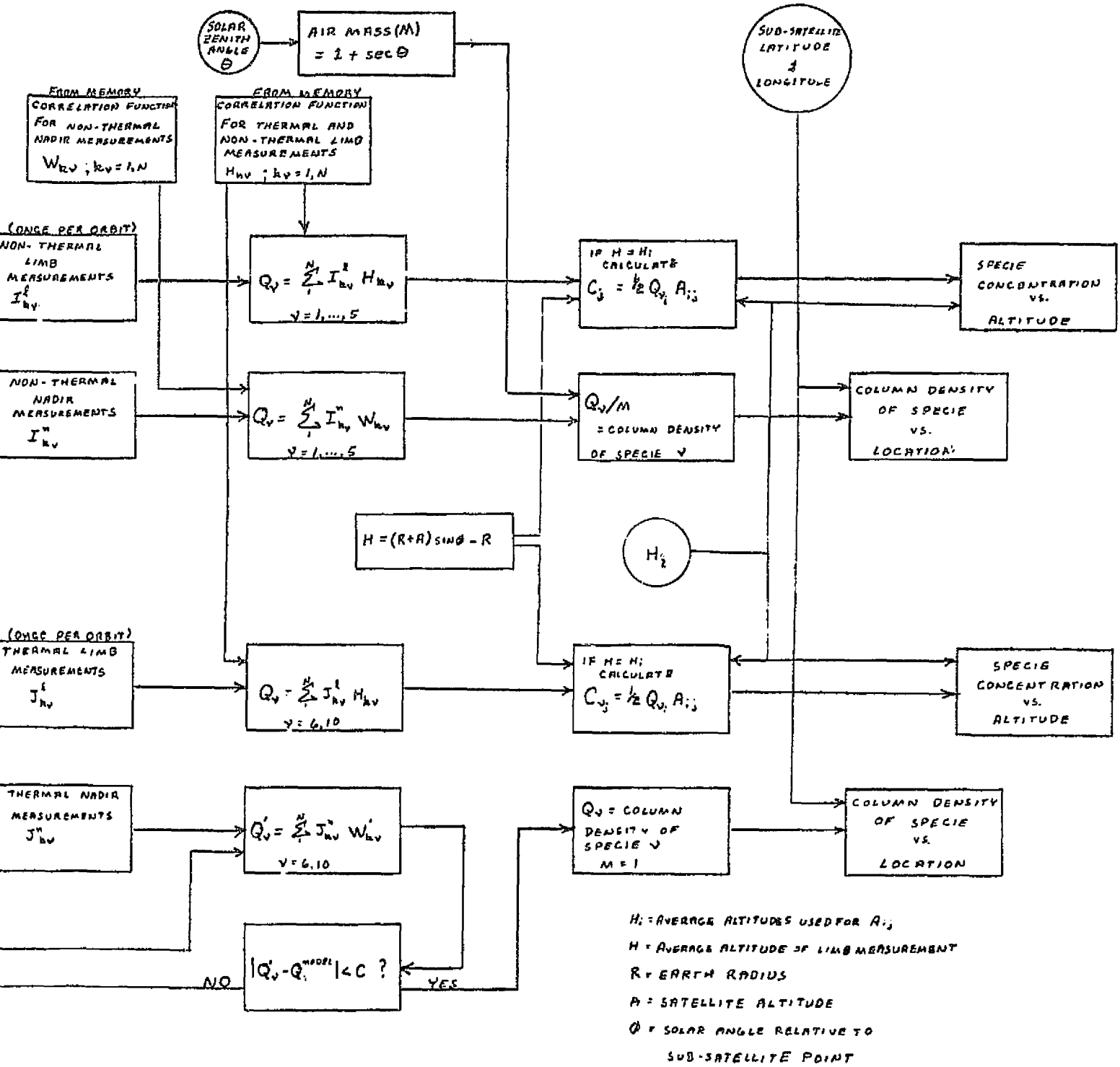

Figure 6-10. CIMATS Data Processing

FOLDOUT FRAME 2

$\lambda_2(t)$
$\phi_2(t)$
$\lambda_1(t)$
$\phi_1(t)$

$$a(t) = \cos^{-1}\Big[\sin\lambda_1(t)\sin\lambda_2(t) + \cdots$$

FOLDOUT FRAME

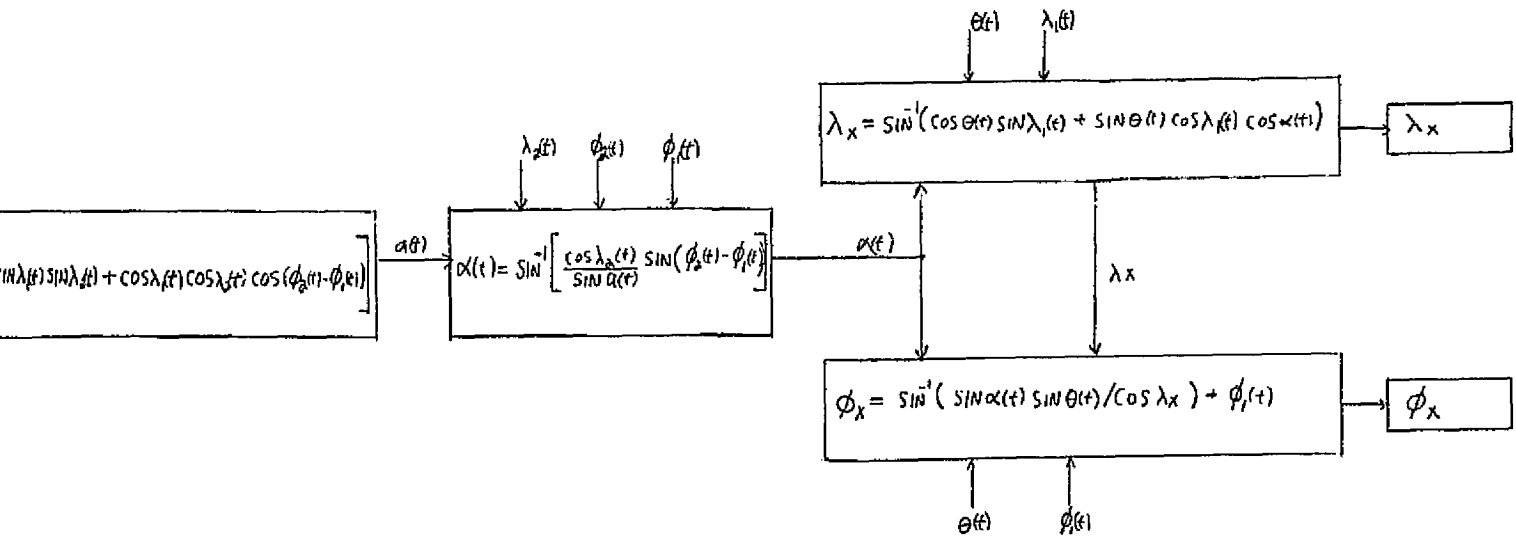

Figure 11a. CIMATS Sub Limb Measurement Lat. and Long.

REPRODUCIBILITY OF THE
ORIGINAL PAGE IS POOR

FOLDOUT FRAME 2

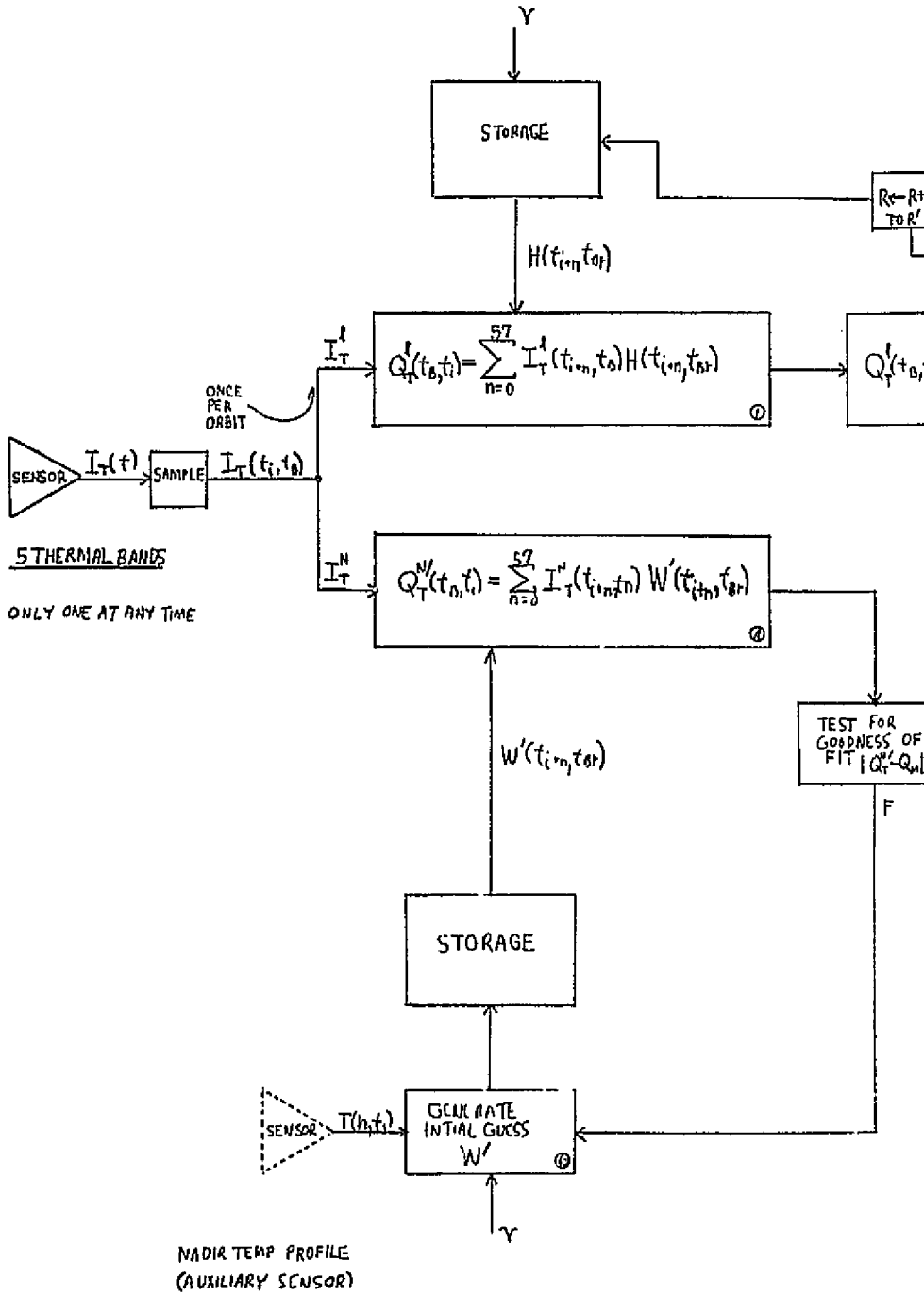

FOLDOUT FRAME 1

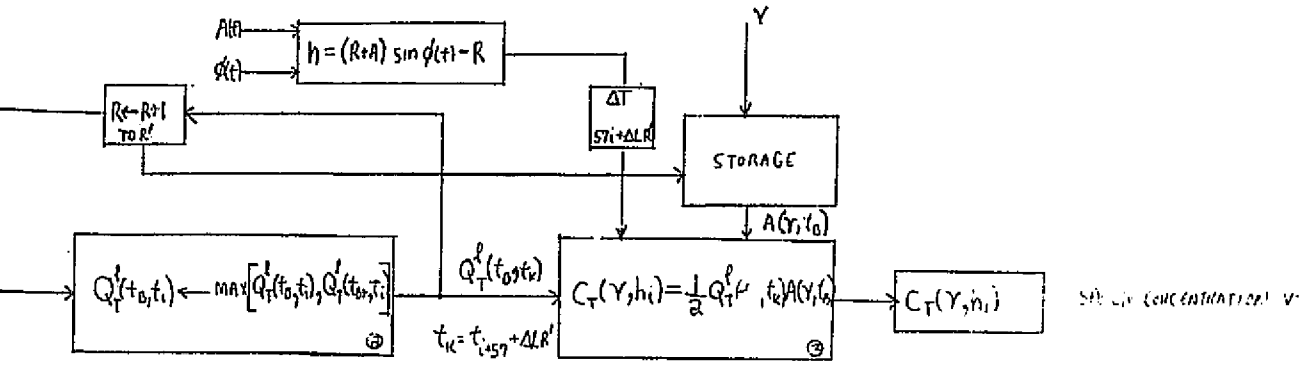

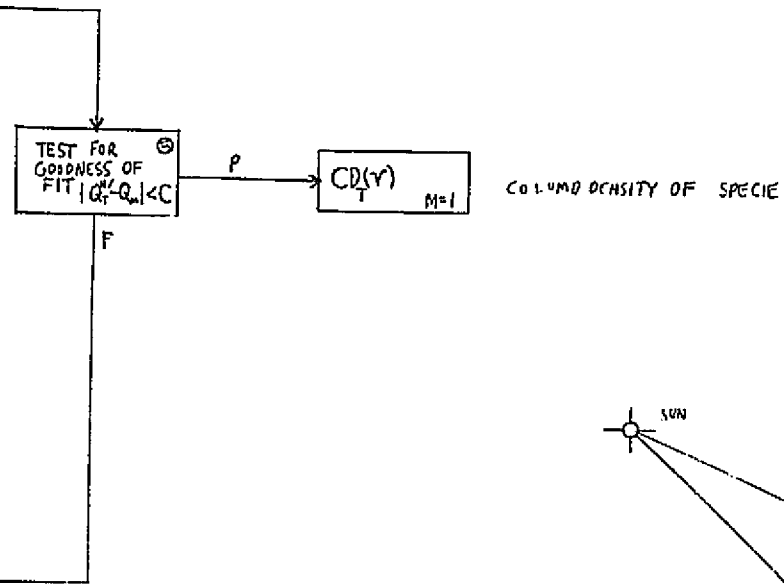

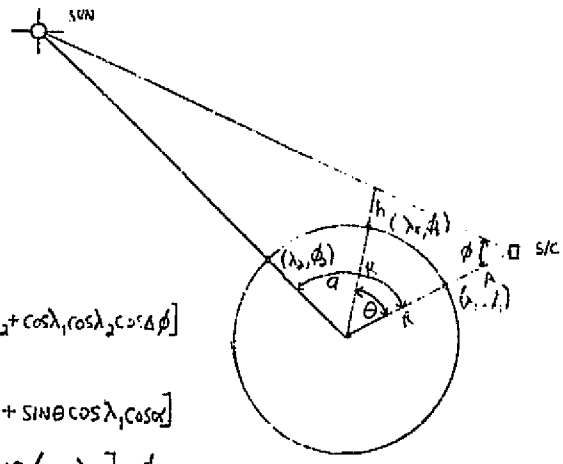

$$a = \cos^{-1}\left[\sin\lambda_1 \sin\lambda_2 + \cos\lambda_1 \cos\lambda_2 \cos\Delta\phi\right]$$

$$\lambda_x = \sin^{-1}\left[\cos\theta \sin\lambda_1 + \sin\theta \cos\lambda_1 \cos\alpha\right]$$

$$\phi_x = \sin^{-1}\left[\sin\alpha \sin\theta / \cos\lambda_x\right] + \phi_1$$

λ_1 - SUB-SATELLITE LAT.
ϕ_1 - SUB-SATELLITE LONG.
λ_2 - SOLAR LAT.
ϕ_2 - SOLAR LONG.

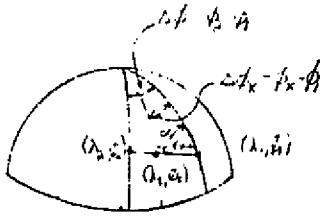

Figure 6-11b. CIMATS Non-Thermal

FOLDOUT FRAME 2

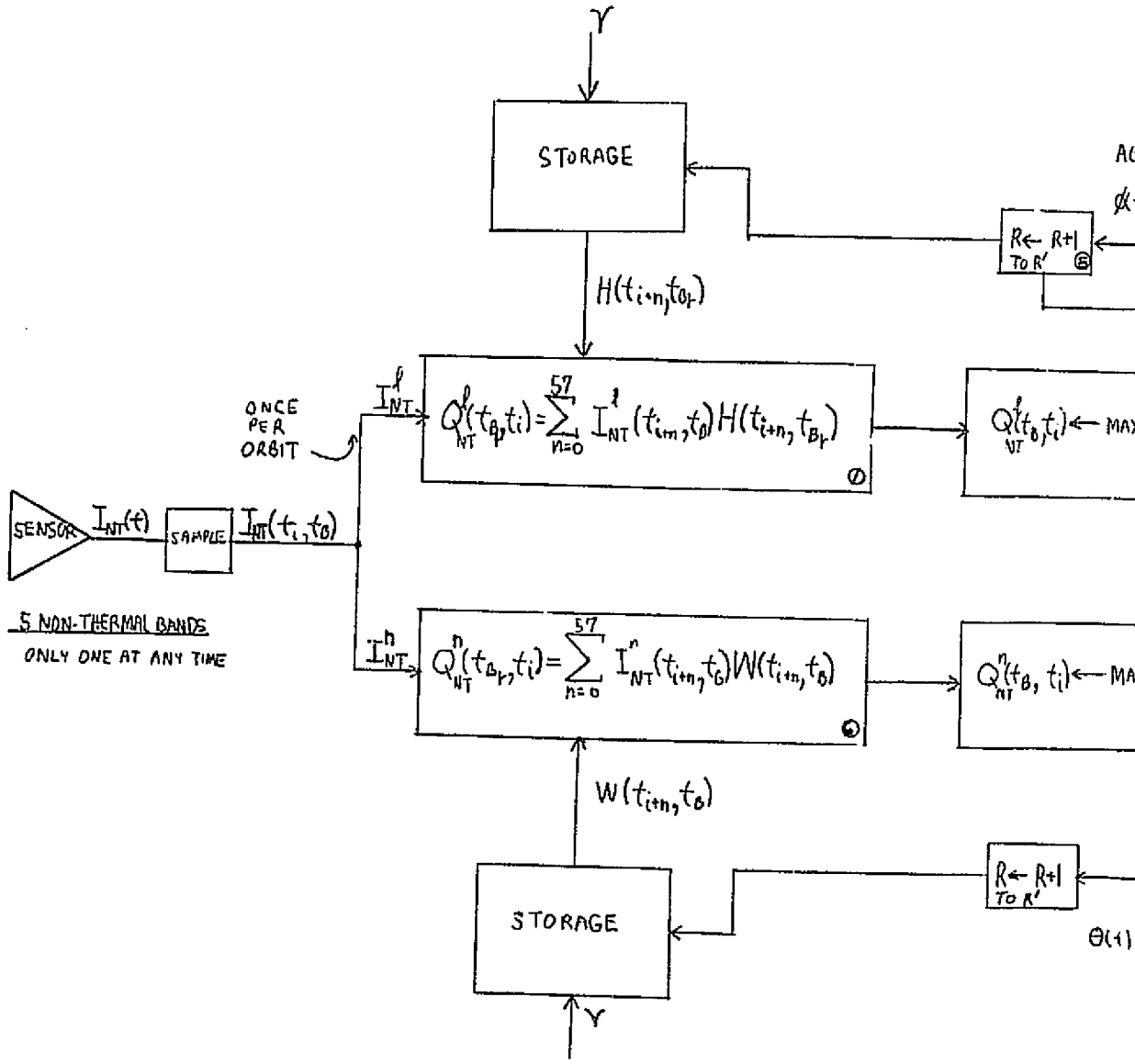

FOLDOUT FRAME 1

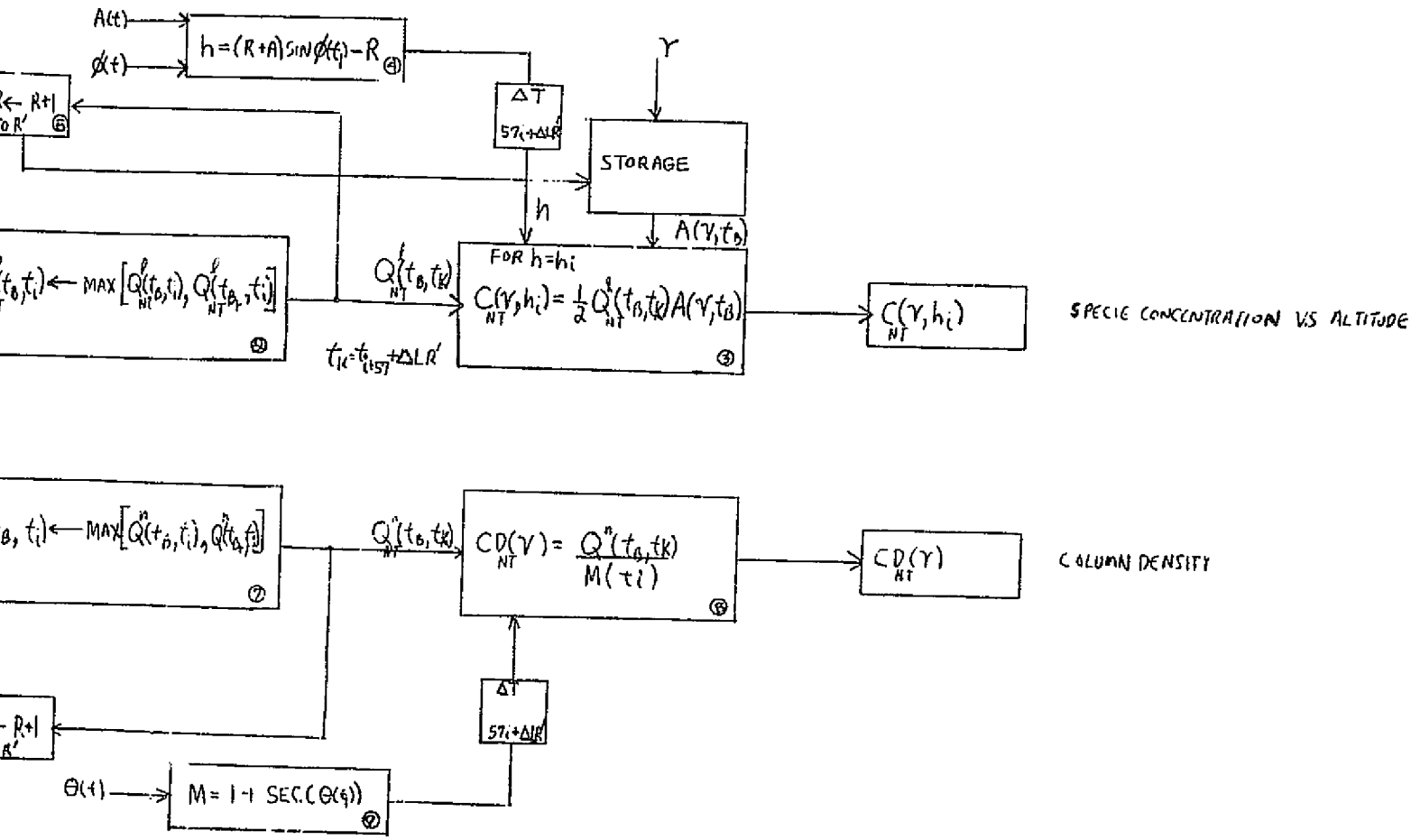

Figure 6-11c. CIMATS Thermal Bands

FOLDOUT FRAME 2

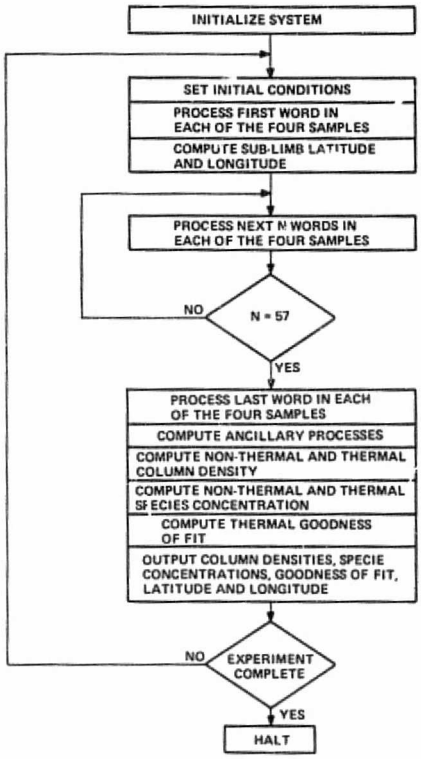

Figure 6-12. CIMATS Flow Chart for Array Processor

The advantage of minimal input/output port availability and the disadvantage of high throughput for batch processing modes are direct inverses for real time multi-task modes.

In addition, the I/O capability for the basic OEDSF is dependent on the matrix size. The present OEDSF is characterized by 28 input and 28 output ports without external multiplexing and demultiplexing. The internal cycle time for the array is designed so that the cycle (array period) is always small in comparison to the sensor data period.

6.2 PROGRAMMING TECHNIQUE

The OEDSF is an advanced signal processor that requires a language that enables an operator to instruct the machine. The language is a numerical analysis oriented structure that was defined conceptually for the machine. The programming is presented in the following manner.

- Parameter definition
- Symbol table generation
- Syntax development

REPRODUCIBILITY OF THE
ORIGINAL PAGE IS POOR

- Sensor program
- Sub-routine discussion

The initial step in programming any machine is to assign a machine word for each primary and secondary data variable to be processed. This parameter definition shown in Figure 6-13 allows communication between the programmer and the machine. Each input variable and output variable for the OEDSF is assigned a mnemonic. The parameter definition establishes the input/output port requirements for externally generated variables. The external port configuration for the CIMATS is shown in Figure 6-14. Each primary variable is assigned a port as shown in Figure 6-15.

λ_1	= SUB-SATELLITE ALTITUDE
λ_2	= SOLAR LATITUDE
ϕ_1	= SUB-SATELLITE LONGITUDE
ϕ_2	= SOLAR LONGITUDE
A	= SATELLITE ALTITUDE
R	= EARTH RADIUS
λ_x	= SUB-LIMB LATITUDE
ϕ_x	= SUB-LIMB LONGITUDE
CD_{NT}	= NON-THERMAL COLUMN DENSITY
CD_T	= THERMAL COLUMN DENSITY
C_{NT}	= NON-THERMAL SPECIE CONCENTRATION
C_T	= THERMAL SPECIE CONCENTRATION
I_L^{NT}	= NON-THERMAL LIMB MEASUREMENT
I_N^{NT}	= NON-THERMAL NADIR MEASUREMENT
I_L^T	= THERMAL LIMB MEASUREMENT
I_N^T	= THERMAL NADIR MEASUREMENT
GOF	= GOODNESS OF FIT

Figure 6-13. Parameter Definition

The input/output ports are defined along the peripheral processing elements as shown in Figure 6-16. Input ports are designated as alphabetics A through D and output ports are designated as alphabetics E through H. The subscript designates in which processing element the port is located. The location of the processing element within the array determines the number of input/output ports externally available.

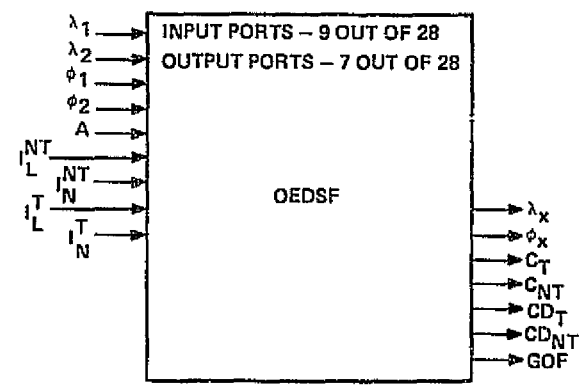

Figure 6-14. CIMATS Prime Port Utilization

In addition to assigning external variables to ports, the assembly program for the machine assigns an input port to each internally generated parameter that must be re-entered in the array. The port assignment table shown in Figure 6-15 was manually generated for the CIMATS sensor. The CIMATS sensor requires:

- 14 out of 28 input ports
- 8 out of 28 output ports

This port utilization although initially high only requires

- 9 out of 28 input ports
- 7 out of 28 output ports

for sensor unique processes. The remaining parameters are internally generated and/or sensor shared.

A syntax is required to allow a programmer to enter symbolic representations of machine instructions. The preliminary syntax shown in Figure 6-17 was developed for the manual programming aspects. The syntax was formulated on the numerical analysis machine orientation similar to Fortran being orientated to mathematical expressions. The subscript WW denotes the matrix location of the destination processing element. This PE is the location where the desired operation will be performed. The subscripts XX, YY, ZZ denote the source processing elements for the control variables X, Y, and Z. Each variable may be selected from one of four surrounding processing elements. An input port is treated as a surrounding processing element. The operation code determines which function will be executed in the element. The actual syntax required for an autonomous assembly has not been defined in this study.

$\lambda_1 = B_{21}$	$I_L^{NT} = B_{31}$
$\lambda_2 = C_{12}$	$I_L^{NT} = A_{31}$
$\phi_1 = C_{11}$	$I_L^{T} = D_{35}$
$\phi_2 = B_{11}$	$I_N^{T} = D_{15}$
$A = A_{11}$	$E_{52} = A_{21}$
$\lambda_x = H_{25}$	$\Theta = B_{12}$
$\phi_x = E_{54}$	$H_{25} = D_{12}$
$CD_{NT} = F_{53}$	$F_{52} = B_{14}$
$CD_T = F_{51}$	$A_{51} = E_{51}$
$C_{NT} = F_{55}$	$E_{55} = D_{55}$
$C_T = F_{54}$	$GOF = H_{45}$

Figure 6-15. Port Assignment

The program for the CIMATS sensor is shown in Figure 6-18. The program format consists of five major portions:

- Array period
- Sensor period
- Prime sensor data program
- Ancillary sensor data program
- Comments

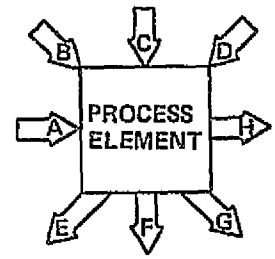

Figure 6-16. Processing Element Port Designation

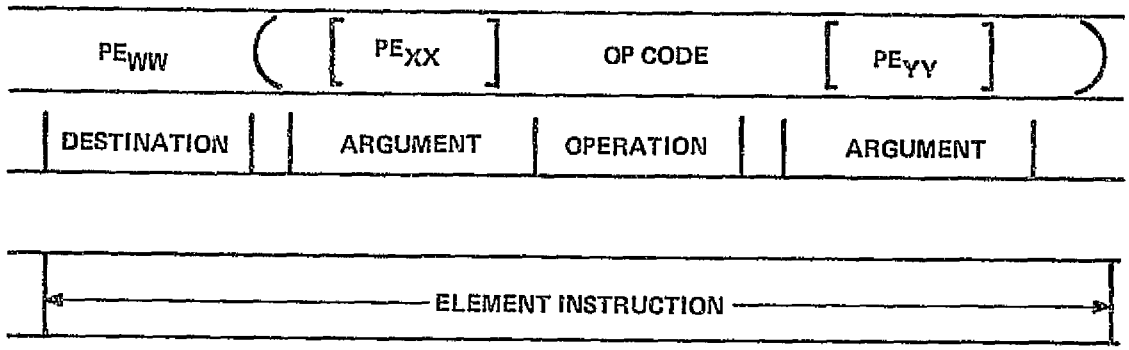

Figure 6-17. Program Format

Column one is the sensor data period as measured from a reference. This reference is arbitrary and establishes the first sensor word in the process. Typical reference may be:

- Synchronization
- Another machine cycle
- Real time clock

Column two indicates the array machine cycles available during one sensor data word. The relationship between the sensor data period and the array period is the basic principle of the OEDSF. This relationship expressed as

$$\frac{T_{sensor}}{T_{array}} > 1$$

must always exist. Consequently, many array machine cycles are available to process a single sensor data word which allows for each processing element to be timeshared. Column three is the program for the primary sensor while the fourth column is the program for the secondary sensor processes. Secondary processes are those required for the processing of prime data but not directly manipulating the prime variable, e.g., sub-limb longitude and latitude calculations. The fifth column is a remarks section reserved for the programmer.

The overall CIMATS impact on the OEDSF with a 5 x 5 CPU and 250 nanosecond cycle is shown in Table 6-7. The insignificant CIMATS loading on a single OEDSF shows the powerful capability of the machine and the multi-sensor capability. The OEDSF, in addition, requires only 104 instructions compared to 1024 instructions required in a general purpose computer.

Table 6-7. CIMATS Processing Loading of the OEDSF

Machine Cycles per Sensor Period	1,652
Machine Cycles Available per Process	95,816
Machine Cycles Required per Process	250
Array Cycle Utilization	0.26%
Machine Operations Available per Process	2.4×10^6
Machine Operations Utilized per Process	872
Machine Operation Utilization	0.03%
Program Length (Number of Instructions)	104
Program Memory Size in Bits	2,496

SENSOR PERIOD	MACHINE CYCLE	PRIMARY SENSOR PROCESSING OPERATION CODE
1	1	$PE_{51}([PE_{51}] \leftarrow 0)$; $PE_{53}([PE_{53}] \leftarrow 0)$; $PE_{55}([PE_{55}] \leftarrow 0)$; $PE_{43}([PE_{43}] \leftarrow 0)$; $PE_{31}([SP_{31}] \times [A_{31}])$; $PE_{15}([SP_{15}] \times$
	2	$PE_{31}([SP_{31}] \times [B_{31}])$; $PE_{42}([PE_{31}] + \Delta T)$; $PE_{24}([PE_{15}] + \Delta T)$; $PE_{34}([PE_{35}] + \Delta T)$
	3	$PE_{51}(\Sigma[PE_{42}])$; $PE_{34}([PE_{24}] + \Delta T)$, $PE_{42}([PE_{31}] + \Delta T)$; $PE_{55}(\Sigma[PE_{34}])$
	4	$PE_{53}(\Sigma[PE_{42}])$; $PE_{43}(\Sigma[PE_{54}])$
	5	
	6	
	7	
	8	
	9	
	10	
	11	
	12	
	13	
	14	
	15	
	16	
	17	
	18	
2 - 57	1	$PE_{31}([SP_{31}] \times [A_{31}])$; $PE_{15}([SP_{15}] \times [D_{15}])$; $PE_{35}([SP_{35}] \times [D_{35}])$
	2	$PE_{31}([SP_{31}] \times [B_{31}])$; $PE_{42}([PE_{31}] + \Delta T)$; $PE_{24}([PE_{15}] + \Delta T)$; $PE_{34}([PE_{35}] + \Delta T)$
	3	$PE_{51}(\Sigma[PE_{42}])$; $PE_{34}([PE_{24}] + \Delta T)$; $PE_{42}([PE_{31}] + \Delta T)$; $PE_{55}(\Sigma[PE_{34}])$
	4	$PE_{53}(\Sigma[PE_{42}])$; $PE_{43}(\Sigma[PE_{34}])$
58	1	$PE_{31}([SP_{31}] \times [A_{31}])$; $PE_{15}([SP_{15}] \times [D_{15}])$; $PE_{35}([SP_{35}] \times [D_{35}])$
	2	$PE_{31}([SP_{31}] \times [B_{31}])$; $PE_{42}([PE_{31}] + \Delta T)$; $PE_{24}([PE_{15}] + \Delta T)$; $PE_{34}([PE_{35}] + \Delta T)$
	3	$PE_{51}(\Sigma[PE_{42}])$; $PE_{34}([PE_{24}] + \Delta T)$; $PE_{42}([PE_{31}] + \Delta T)$; $PE_{55}(\Sigma[PE_{34}])$
	4	$PE_{53}(\Sigma[PE_{42}])$; $PE_{43}(\Sigma[PE_{34}])$; $PE_{51}([A_{51}] \times [PE_{42}])$
	5	$PE_{41}([A_{41}] \times 1)$; $PE_{44}([PE_{43}] - [SP_{44}])$
	6	$PE_{52}([PE_{41}] \times 1)$; $PE_{54}([PE_{43}] \times 1)$; $PE_{45}([PE_{44}] \times 1)$
	7	$PE_{53}([PE_{52}] \times [PE_{42}])$; $PE_{55}([PE_{44}] \times [D_{55}])$
	8	$OUT([F_{45}])$; $OUT([F_{51}])$; $OUT([F_{53}])$; $OUT([F_{55}])$; $OUT([F_{64}])$; $OUT([H_{25}])$
	9	$OUT([E_{54}])$

FOLDOUT FRAME 1

	ANCILLARY SENSOR AND DATA PROCESSING OPERATION CODE	CO
$\times[A_{31}]; PE_{15}([SP_{15}]\times[D_{15}]); PE_{35}([SP_{35}]\times[D_{35}])$	$PE_{11}([B_{11}]-[C_{11}])$; $PE_{12}(COT\,[C_{12}])$; $PE_{21}(COT\,[B_{21}])$	RESET ACCUMULATORS, $I_N^{NT}=A_{31}$, $I_L^{NT}=B_{31}$,
	$PE_{21}(COS[PE_{11}])$; $PE_{22}([PE_{12}]\times[PE_{21}])$; $PE_{11}([B_{11}]-[C_{11}])$	
	$PE_{32}([PE_{21}]\times[PE_{22}])$	
	$PE_{42}([PE_{32}]+1)$; $PE_{11}([B_{11}]-[C_{11}])$	
	$PE_{52}(COS^{-1}[PE_{42}])$; $PE_{12}(COS[C_{12}])$; $PE_{21}(SIN[PE_{11}])$	$\theta = COS^{-1}[1+COT\,\lambda_1\cdot COT\,\lambda_2\cdot COS(\phi_2-\phi_1)]$ COMPUTED
	$PE_{21}(SIN[A_{21}])$; $PE_{22}([PE_{21}]\times[PE_{12}])$	FEEDBACK OF θ FROM E_{52} TO A_{21}
	$PE_{32}([PE_{22}]\div[PE_{21}])$	
	$PE_{42}([PE_{32}]+\Delta T)$	
	$PE_{52}(SIN^{-1}[PE_{42}])$; $PE_{21}(COT\,[B_{21}])$; $PE_{12}(TAN\,[B_{12}])$	$\alpha = SIN^{-1}[(COS\,\lambda_2/SIN\,\theta)\cdot(SIN[\phi_2-\phi_1])]$
	$PE_{14}(COS[B_{14}])$; $PE_{22}([PE_{21}]\times[PE_{12}])$	FEEDBACK OF α FROM F_{52} TO B_{14}
	$PE_{23}([PE_{14}]\times[PE_{22}])$	
	$PE_{24}(1+[PE_{23}])$; $PE_{11}([B_{11}]\times 1)$	
	$PE_{25}(SIN^{-1}[PE_{24}])$; $PE_{12}(SIN\,[B_{12}])$; $PE_{14}(SIN[B_{14}])$; $PE_{22}([PE_{11}]+\Delta T)$	$\lambda_x = SIN^{-1}[1+TAN\,\theta\cdot COT\,\lambda_1\cdot COS\alpha]$ COMPUTE
	$PE_{23}([PE_{12}]\times[PE_{14}])$; $PE_{14}(COS[D_{12}])$; $PE_{33}([PE_{22}]+\Delta T)$	FEEDBACK OF λ_x FROM H_{25} TO D_{12}
	$PE_{24}([PE_{23}]\div[PE_{14}])$; $PE_{34}([PE_{33}]+\Delta T)$	
	$PE_{35}([PE_{24}]+[PE_{34}])$	
	$PE_{44}([PE_{35}]+\Delta T)$	
	$PE_{54}(SIN^{-1}[PE_{44}])$	$\phi_x = SIN^{-1}[(SIN\alpha\cdot SIN\theta/COS\,\lambda_x)+\phi_1]$ COMPUTE
$]+\Delta T)$		INTEGRATION OF EACH FRAME
	$PE_{11}([C_{11}]\times 1)$; $PE_{12}(SEC\,[B_{12}])$	
$+\Delta T)$	$PE_{21}(SIN[PE_{11}])$; $PE_{11}([A_{11}]+[SP_{11}])$; $PE_{22}([PE_{12}]+1)$	ALT = A_{11}, M = 1 + SEC θ COMPUTED IN PE_{22}
$)$	$PE_{22}([PE_{21}]\times[PE_{11}])$; $PE_{33}([PE_{22}]+\Delta T)$	$Q_N^{NT} = \Sigma I_N^{NT}\times H$ COMPUTED AND STORED IN E_{51}, Q_L^{T}
	$PE_{23}([PE_{22}]-[SP_{23}])$; $PE_{42}([PE_{33}]+\Delta T)$	$Q_L^{NT} = \Sigma I_L^{NT}\times H$ COMPUTED AND STORED IN E_{53},
	$PE_{33}([PE_{23}]-[SP_{33}])$	PREVIOUS CYCLE: NON-THERMAL SPECIE CONCE
	$PE_{42}([SP_{42}]\leftarrow[PE_{33}])$; $PE_{44}([SP_{44}]\leftarrow[PE_{33}])$	THERMAL SPECIES CONCENTRATION COMPUTED
		NON-THERMAL COLUMN DENSITY COMPUTED
$_{25}])$		OUTPUT ENABLED TO STORAGE MEDIUM OR

FOLDOUT FRAME 2

REPRODUCIBILITY OF T
ORIGINAL PAGE IS POO

CODE	COMMENTS
	RESET ACCUMULATORS, $I_N^{NT} = A_{31}$, $I_L^{NT} = B_{31}$, $I_L^T = D_{35}$, $I_N^T = D_{15}$, $\lambda_1 = B_{21}$, $\lambda_2 = C_{12}$, $\phi_1 = C_{11}$, $\phi_2 = B_{11}$
	$a = \cos^{-1}[1 + \cot\lambda_1 \cdot \cot\lambda_2 \cdot \cos(\phi_2 - \phi_1)$ COMPUTED AND STORED IN OUTPUT REGISTER E_{52} FEEDBACK OF a FROM E_{52} TO A_{21}
	$\alpha = \sin^{-1}[(\cos\lambda_2/\sin a) \cdot (\sin[\phi_2 - \phi_1])]$ COMPUTED AND STORED IN OUTPUT REGISTER F_{52}, $\Theta = B_{12}$ FEEDBACK OF α FROM F_{52} TO B_{14}
$PE_{11}] + \Delta T)$	$\lambda_x = \sin^{-1}[1 + \tan\Theta \cdot \cot\lambda_1 \cdot \cos\alpha]$ COMPUTED AND STORED IN H_{25} FEEDBACK OF λ_x FROM H_{25} TO D_{12}
	$\phi_x = \sin^{-1}[(\sin\alpha \cdot \sin\Theta/\cos\lambda_x) + \phi_1]$ COMPUTED AND STORED IN E_{54}
	INTEGRATION OF EACH FRAME
	ALT $= A_{11}$, $M = 1 + \sec\Theta$ COMPUTED IN PE_{22} $Q_N^{NT} = \Sigma I_N^{NT} \times H$ COMPUTED AND STORED IN E_{51}, $Q_L^T = \Sigma I_L^T \times H$ COMPUTED AND STORED IN E_{55} $Q_L^{NT} = \Sigma I_L^{NT} \times H$ COMPUTED AND STORED IN E_{53}, $Q_N^T = \Sigma I_N^T \times H$ COMPUTED AND STORED IN PE_{43}, $h = (R + ALT)\sin\phi_1 \cdot M$ COMPUTED IN PE_{23} PREVIOUS CYCLE: NON-THERMAL SPECIE CONCENTRATION COMPUTED AND STORED IN F_{51}; $E_{51} = A_{51}$ THERMAL SPECIES CONCENTRATION COMPUTED AND STORED IN F_{54}; GOODNESS OF FIT COMPUTED AND STORED IN H_{45} NON-THERMAL COLUMN DENSITY COMPUTED AND STORED IN F_{53}, THERMAL COLUMN DENSITY COMPUTED AND STORED IN F_{55}, $E_{55} = D_{55}$ OUTPUT ENABLED TO STORAGE MEDIUM OR DOWN LINK TRANSMITTER

Figure 6-18. CIMATS Data Processing Program for 5x5 Array Processor

FRAME 2

FRAME 3

SECTION 7
DESIGN CONCEPTS

This section discusses the approaches to the design of the OEDSF given the array architecture described in Section 6. These consider the requirements imposed on each segment of the processor, the alternate viable approaches, and their characteristics applicable to the requirements, the criteria applied to the trade-offs performed between these approaches, and the selected approach for each of the segments.

7.1 OVERVIEW

The OEDSF is specifically designed to cost-effectively process onboard Shuttle data of multiple instruments with data rates ranging from a few bits per second to over 100 megabits per second.

The OEDSF is a data processing oriented, distributed machine characterized by sets of programmable pipeline processors. The distributed architecture derives from the allocation of discrete elements to the performance of dedicated functions. It is a central facility in that it is shared by many instruments. The advantages of a central facility in the role of the OEDSF are:

1. Sharing of common processes such as computation of latitude and longitude.
2. Interactive processes whereby the data output of an instrument is used in the processing of another.
3. Repeated utilization on many Shuttle flights by simple reconfiguration of the control program.

The OEDSF is modular by addition of array structures as shown in Figure 7-1.

Each array is a programmable processor with the six-point architecture shown in Figure 7-2. The major elements of the array are:

- Input Structure
- Output Structure
- Central Processing Unit
- Data Base Memory Structure
- Program Memory Structure
- Controller

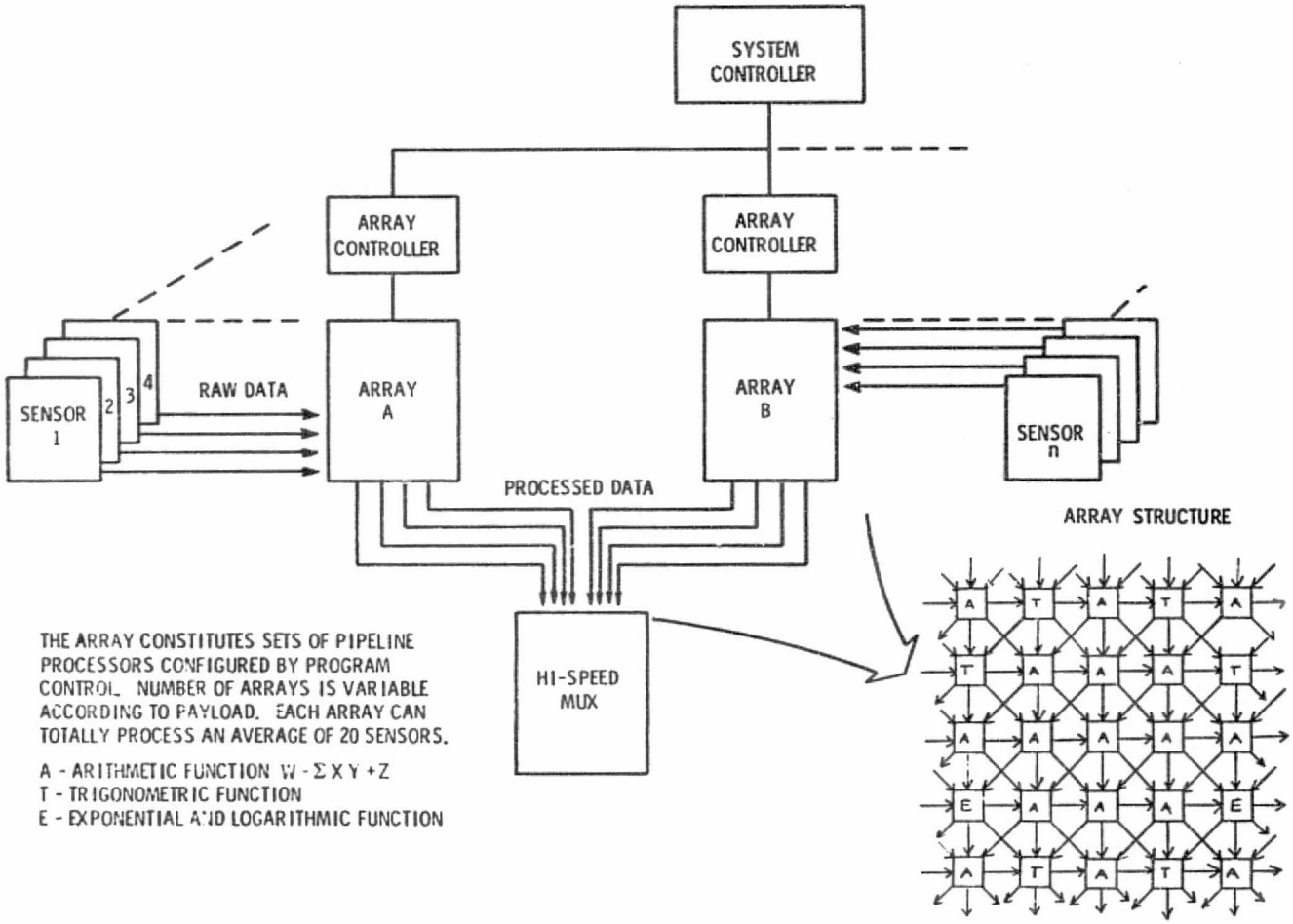

Figure 7-1. The OEDSF Concept

REPRODUCIBILITY OF THE ORIGINAL PAGE IS POOR.

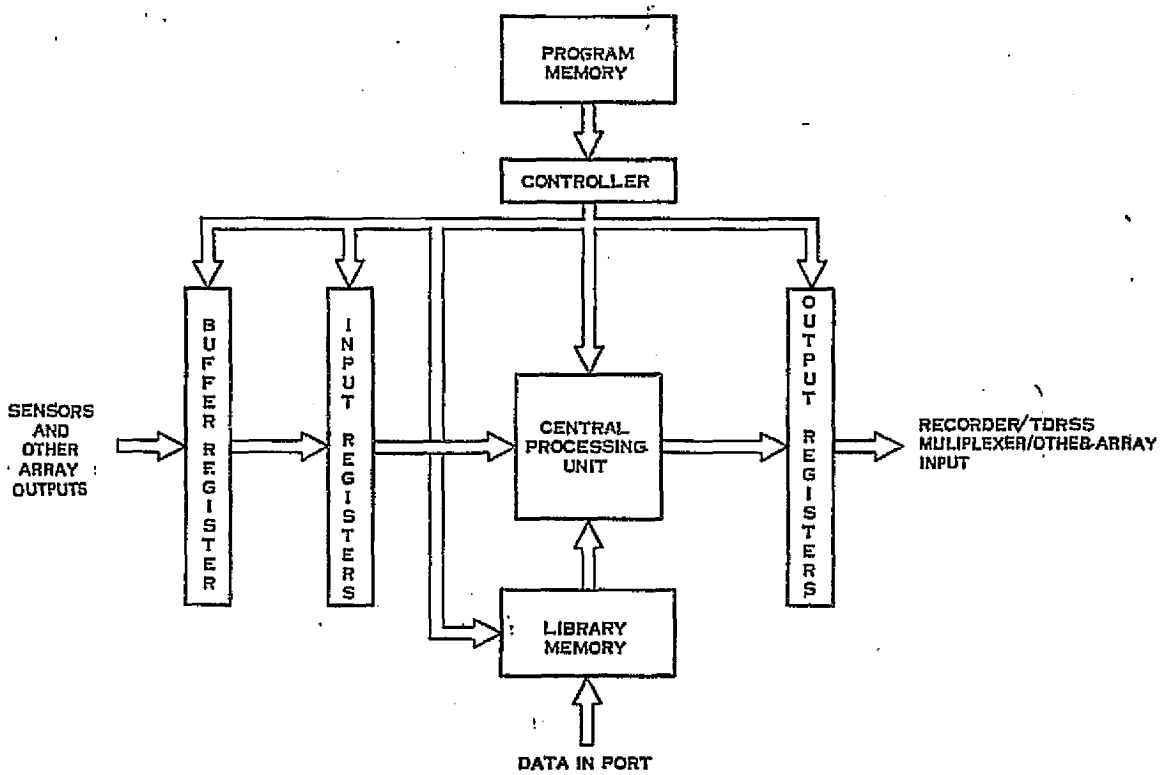

Figure 7-2. Basic OEDSF Array Processor

The Central Processing Unit (CPU) is the heart of the OEDSF and is specifically designed to process data from multiple sensors and instruments. Its elements perform medium level functions divided into three functional categories:

- Algebraic (or Arithmetic)
- Trigonometric
- Exponential and Logarithmic

The distribution of these elements in terms of quantity and location within the array was determined by analyses of the instrument processing requirement.

The set of functions performed by the CPU is shown in Table 7-1. The cycle time of the CPU is 250 nanoseconds; i. e., the total time required for data acquisition, performance of any function in Table 7-1 and data output is 0.25 microsecond.

The OEDSF operates asynchronously with the instrument data input and its output. This capability derives from its input/output buffer structure and its speed which, in general, allows several OEDSF CPU cycles for each instrument input word.

Table 7-1. Function Set Summary

FUNCTION SET SUMMARY		
• $X+Y$	• $\Sigma (X \cdot Y)$	• SECANT
• $X-Y$	• $\Sigma (X \cdot Y^{-1})$	• COSECANT
• $X \cdot Y$	• $\Sigma (X \cdot Y+Z)$	• ARC - SINE
• $X \cdot Y^{-1}$	• $\Sigma (X \cdot Y^{-1}+Z)$	• ARC - COSINE
• $X \cdot Y+Z$	• $\Sigma (X \cdot Y-Z)$	• ARC - TANGENT
• $X \cdot Y^{-1}+Z$	• $\Sigma (X \cdot Y^{-1}-Z)$	• ARC - COTANGENT
• $X \cdot Y-Z$	• SINE	• ARC - SECANT
• $X \cdot Y^{-1}-Z$	• COSINE	• ARC-COSECANT
• $\Sigma (X+Y)$	• TANGENT	• X^Y
• $\Sigma (X-Y)$	• COTANGENT	• LOG_{XY}

The Data Base Memory structure and the Program memory structure (the control element) have identical architectures based on a hierarchical structure which allows both a high volume and high rates.

The OEDSF can process the data from 20 sensors of the composite sensor B class. This calculation assumes an efficiency factor of 50% for the array; i.e., programming and scheduling conflicts allow only 50% utilization of each array element. This is deemed a conservative figure which assumes a relatively weak scheduler; i.e., utilization of the processing elements as a function of time.

The features of the OEDSF are summarized in Table 7-2.

This initial design of the OEDSF considers the use of discrete logic components yielding a volume of approximately 1.5 cubic feet and power requirements of 150 watts for each array.

Advances in technology within the next two to five years will make a Large Scale Integration (LSI) implementation feasible. Such an implementation results in the following characteristics:

- 2×10^8 operations per second
- 0.03 cubic foot volume (1 board)
- 3 watts power dissipation

Further, the significantly lower cost associated with each OEDSF will allow the allocation of an entire matrix to each sensor with corresponding benefit in integration and test, and in programming activities.

Table 7-2. OEDSF Characteristics

FEATURES	ATTRIBUTES
• 20 SENSORS AVERAGE PER ARRAY	• SIX POINT ARCHITECTURE
• REAL TIME PROCESSING	• 5 X 5 MATRIX CPU
• ASYNCHRONOUS INPUT/OUTPUT	• HIEARCHIAL MEMORY STRUCTURE
• 250 NANOSECOND MACHINE CYCLE	• CENTRAL LIBRARY
• 28,494 AVAILABLE PIPELINES	• THREE GENERIC PROCESSING ELEMENTS
• 100 MEGA FUNCTIONS PER SECOND	• PROGRAMMABLE PIPELINES
• MODULAR AND CASCADABLE	• WIDE BANDWIDTH

The major consideration in the design of the OnBoard Experiment Data Support Facility was the nature of the implementation. Three methods of implementation are available:

- Hardwired or Random Logic
- Software
- Firmware

Each approach exhibits advantages and disadvantages with respect to sensor processing. A description of each area and its subsequent characteristics is discussed below.

Software

Software is defined as computer programs which are a collection of instructions properly ordered to perform a particular task or set of tasks governed by a performance specification. Software is generally executed on a general purpose computer.

Software possesses many characteristics that must be considered for sensor data processing. The most important characteristics are:

- Complex Arithmetic Capability
- Slow to Medium Speed
- Invariant Hardware
- High Flexibility
- Dynamic System Modification

The high arithmetic capability exists on general purpose machines due to the register termed the accumulator. The accumulator is capable of the primitive addition. The capability exists since all mathematical operations can be decomposed or approximated by adding variables. However, the requirement to add results in significant speed versus complexity trade-offs. Most computers are oriented for general purpose applications over a wide range of users. Consequently, the machine is a composite of a numerical processor, logic processor, and communication processor without a major dominance in any specific area. Certain manufacturers tend to emphasize one capability over the remaining two. For example, the Data General Eclipse is more numerical analysis oriented while the Digital Equipment Corporation PDP-11 is logic processing oriented.

The micro computer is in reality a set of large scale integrated circuits which form a computer. The microprocessor is one of these components that serves as the central processing unit. The arithmetic capability of a typical micro computer is shown in Table 7-3. The polynomial is a second order spline as defined in Appendix C (Polynomial Solutions) requiring nine major macro programs. This program requires 1.75 milliseconds to compute the equation:

$$P^2(x) = ax^2 + bx + c$$

(as shown in Figure 7-3), and 436 bytes of main memory.

This program was benchmarked on an Intellec 8/mod 84 microcomputer. The 8080 CPU was selected since its general characteristics are the most oriented to numerical analysis when compared to other microprocessors such as the Fairchild F-8. The significant feature of the "microprocessor revolution" is that the central processing units are oriented specifically to one of the following areas:

- Numerical Analysis
- Control
- Communication

Each macro as well as additional benchmark programs for other processes were developed during the study to provide analytical metrics (quantitative measuring standards). The progrms are listed in Appendix B.

Hardwired or Andom Logic

Hardwired or random logic is defined as a solution implemented utilizing discrete components and integrated circuits governed by a performance specification.

REPRODUCIBILITY OF THE
ORIGINAL PAGE IS POOR

Table 7-3. Software Modeling Parameters*

FUNCTION	SUB-ROUTINES	INSTRUCTIONS	
MULTIPLY	1	17	292 μS
DIVIDE	1	34	408 μS
ADD	1	6	9.5 μS
SUBTRACT	1	6	11.0 μS
TABLE LOOK-UP	1	9	23 μS
ACCUMULATE	1	12	25.0 μS
COMPUTE SIGN	1	46	66.5 μS

*8080 CPU

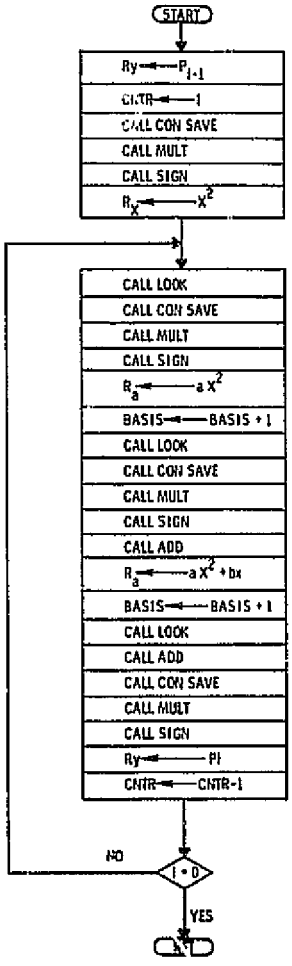

Figure 7-3. Polynomial Subroutine

Any system is capable of a hardwired implementation with the following significant characteristics:

- High Speed
- Cost Effective at the Single Function Level
- Programmable at the Cost of Speed
- Hardware Dependent on the Function

Each solution requires a fabrication effort so that hardwired devices are characterized by higher recurring costs. A polynomial solution identical to the polynomial solved in software is shown in Figure 7-4 as a hardwired approach. This solution provides a high speed solution requiring a limited number of medium scale integrated circuits.

Firmware

Firmware is defined as software contained in read-only memory. A broader definition applicable for this study is: Algorithms contained in random access and/or read-only memories.

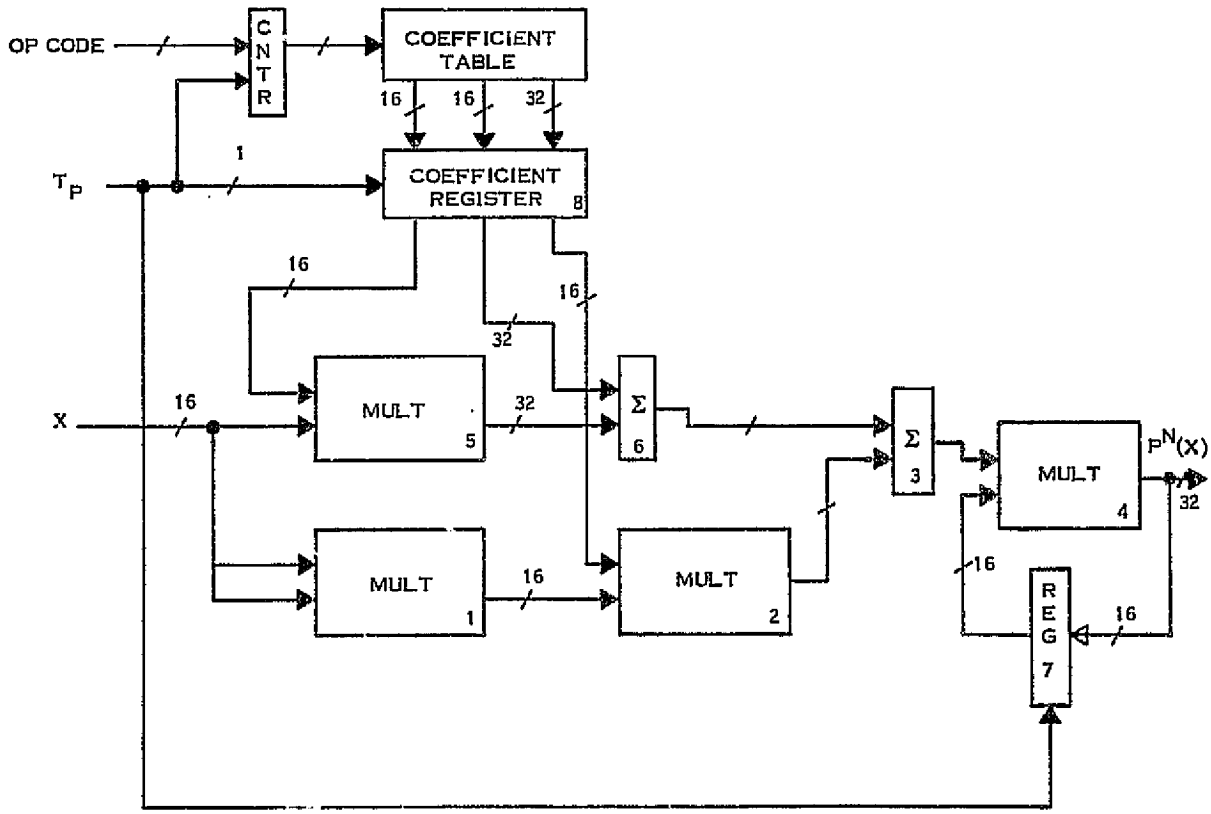

Figure 7-4. Polynomial Functional Diagram

REPRODUCIBILITY OF THE ORIGINAL PAGE IS POOR

This technique of increasing popularity is characterized by the following for numerical processes:

- Software Flexibility
- Hardware Speed
- Significant Pre-processing
- Not Amenable to Complex Functions
- Algorithmic Functional Expression Required

These characteristics are demonstrated by the algebraic adder implemented in Figure 7-5. The firmware solution requires an algorithm which initially generates a set of partial sums. Depending on the carry generation, each stage may or may not alter the next higher order partial sum. Consequently, the addition process exhibits the following characteristics:

- $T_{acess} \leq T_{a+b} \leq 4\ T_{acess}$
- 1100 bytes of memory

The implementation of a polynomial utilizing this technique would require astronomical volumes of memory. The memory size equates directly to operational and physical characteristics as well as cost.

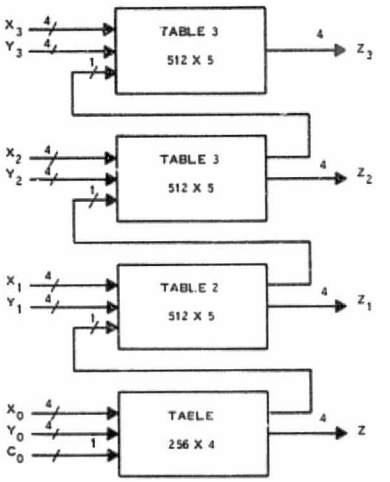

Figure 7-5. Firmware Implementation

The software benchmark programs and the semiconductor technology forecast allowed the modeling parameters shown in Table 7-3 and Table 7-4 respectively to be computed. These parameters are utilized in all subsequent analysis. The use of actual parameters allowed a realistic solution.

7.2 CENTRAL PROCESSING UNIT

The central processing unit is a matrix of 5 x 5 processing elements which comprise programmable pipelines capable of performing three generic classes of operations as shown in Figure 7-6. The processing elements are:

- Arithmetic
- Trigonometric
- Exponential/Logarithmic

Table 7-4. Hardware Modeling Parameters

DEVICE	1975		1985		IC'S REQUIRED
	POWER	SPEED	POWER	SPEED	
MEMORY	0.5 MW/BIT	30 NSEC	0.075 MW/BIT	25 NSEC	64 BITS/IC
16 x 16 MULTIPLIER	1.0 W	70 NSEC	0.3 W	50 NSEC	4
16 BIT ADDER	1.0 W	19 NSEC	0.3 W	10 NSEC	6
SMALL SCALE LOGIC	0.1 W	15 NSEC	0.03 W	8 NSEC	4 GATES/IC
BINARY COUNTERS	0.325 W	40 NSEC	0.09 W	20 NSEC	4 BITS/IC
STEERING LOGIC	0.2 W	20 NSEC	0.06 W	12 NSEC	4 BITS/IC

The primitive functions that the On-board Experiment Data Support Facility must be capable of performing are described in Section 4.

Typical primitive functions are:

- Addition
- Multiplication
- Compute the Sine
- Raise a Number to a Power

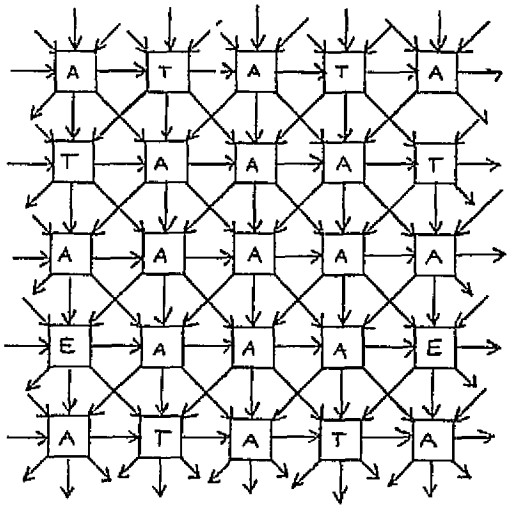

Figure 7-6. 5 x 5 Matrix CPU

These primitive functions and their relative frequency of occurrence (distribution) are shown in Figure 7-7. An assessment of these functions was made to determine the nature and capability of each processing element. This phase of the CPU design is referred to as the level of decomposition; i.e., the determination of

the level of the processing element sophistication. The sophistication of each processing element determines:

- Functional Capacity
- Programming Difficulty
- Physical Characteristics
- Operational Characteristics
- Matrix Dimensions
- Required Technology
- Permissible Methods of Implementation

PRIMITIVE SENSOR DISTRIBUTION

FUNCTION	OPERATIONS	DISTRIBUTION
$A \pm B$	115	.24109
$A * X^{11}$	210	.44025
A	25	.05241
SIN θ	25	.05241
COS θ	25	.05241
TAN θ	20	.04192
COT θ	4	.00838
SEC θ	2	.00419
SIN^{-1}	3	.00628
COS^{-1}	1	.00209
TAN^{-1}	2	.00419
SEC^{-1}	1	.00209
e^x	2	.00419
a^x	14	.02935
ln x	4	.00838
Data Base	24	.05031

Figure 7-7. Primitive Sensor Distribution

The processing elements were initially investigated from a processing philosophy. At one end of the scale are sophisticated functions such as Fourier Transforms or Walsh functions; at the other end are simple additions such as performed by general purpose computers. The former approach is attractive from a programming point of view but requires a very large number of specialized elements. The latter approach requires complex programming and is inherently slow.

Analyses performed on the processes required by the boundary sensors showed that all processes could be performed by combinations of algebraic, trigonometric, exponential and logarithmic functions. The Algebraic (or arithmetic) function was as simple as an addition and could be complex as $\Sigma xy + z$. Since this latter function includes the addition it was selected as the arithmetic processing element. These three elements are discussed in the following paragraphs.

7.2.1 ARITHMETIC PROCESSING ELEMENT

The arithmetic processing element (APE) is the most frequently occurring function within the array. The boundary sensor analysis determined that approximately 80% of the sensor processes were arithmetic. The primitive functions that must be performed are:

- Addition
- Subtraction
- Muitiplication
- Division
- Accumulation

All processes are performed on signed numbers. These functions are sufficient to allow the central processing unit to execute a simple unsigned addition as well as a complex two-dimensional linear transform (e.g. Fourier, Hadamard, Harr, etc.). If each function were assigned a discrete processing element, the minimum contribution of the arithmetic portion of the array would be five; however, these functions are internally distributed as shown in Figure 7-7. The proportion of their utilization coupled to the fact that the least occurring function must be 1 as a minimum results in 13 processing elements being required.

The use of discrete arithmetic functions allows for high operational speed but requires large arrays. The greater the number of discrete processing elements the more complex the distribution function. The number of arithmetic functions per second that a single processing element must execute is given by

$$f_{pe} = \frac{\text{(Number of Operations)} \times \text{(Sensor Data Rate)}}{\text{(Distribution Factor)} \times \text{(Array Size)}}$$

The operational rate for a single processing element executing arithmetic functions on a 5 x 5 array for Composite Sensor B is $f_{pe(a)}$ (5 x 5, B) = 9×10^5 arithmetic operations/second.

The required operational frequencies as a function of array size is shown in Figure 7-8. Consequently, the level of decomposition will impact the array size and operational speed. The arithmetic processes may be realized using one of three approaches.

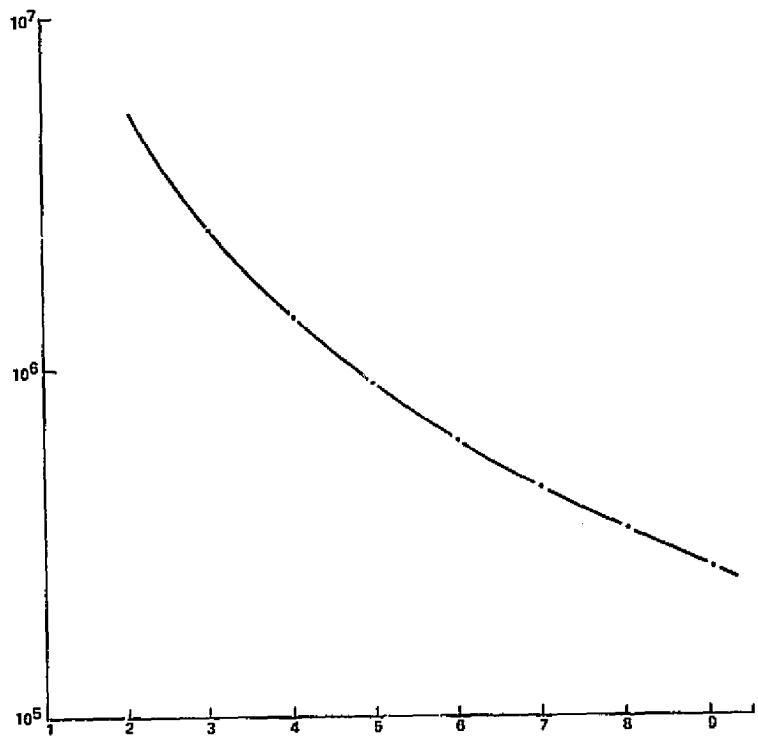

Figure 7-8. Required Frequency in OPS/SEC

Approach One

Approach one is based on utilizing three discrete arithmetic processing units such that:

- $PE_{a-1} = A \pm B$
- $PE_{a-2} = A \cdot X^{\pm 1}$
- $PE_{a-3} = \sum A$

This approach requires a minimum of six processing nodes in the array. Since each element is programmable, six micro-instructions are required every machine cycle.

Approach Two

Approach two is a functional grouping of the primitive processes such that:

- $PE_{a-1} = (A \pm B)$
- $PE_{a-2} = A \cdot X^{\pm 1}$

This approach reduces the required discrete processing nodes to three. This reduction not only reduces the array size but also the micro-instructions per machine cycle by a factor of two.

Approach Three

This approach groups all arithmetic functions into a single discrete processing element such that:

- $PE_a = \sum (A \cdot X^{\pm 1} \pm B)$

This approach results in a factor of six reduction in both array size and micro-instruction required each machine cycle.

The preliminary investigation modeled each approach to establish a hardwired and software approach as shown in Figure 7-9. The parameters determined that a software approach is not feasible for a high-speed sensor data processor. The non-software solution generated the requirement for further analysis on the grouping effects as shown in Figure 7-10. The grouping effects analysis determined that a single processing element may be utilized. The advantages of the single function have been previously described.

REQUIREMENT	HARDWARE				SOFTWARE	
	IC'S	POWER	SPEED	SUB-ROUTINE	INSTRUCTION	SPEED
$\Sigma(AX + B)$	32	5.4 W	161 NS	3	155	564 μS

Figure 7-9. Arithmetic Element Hardware/Software Trade-Offs

LEVEL	INSTRUCTIONS PER SECOND	IC'S	ARRAY POSITIONS	PROCESSING TIME	ELEMENT RATE
$A \pm B$, AX, ΣA	12×10^6	24	3	210×10^{-9} SEC	14×10^6
$AX \pm B$, ΣA	8×10^6	26	2	190×10^{-9} SEC	10×10^6
$\Sigma(AX \pm B)$	4×10^6	32	1	161×10^{-9} SEC	7×10^6

Figure 7-10. Arithmetic Level of Decomposition Effects

7.2.2 TRIGONOMETRIC PROCESSING ELEMENT

The trigonometric processing element was isolated as a single discrete element. The rationale resulting in a single element was that the individual functions by themselves did not constitute a sufficient drive but as a composite generated an acceptable load. In addition, a trigonometric function may be computed based on a minimum of arguments. For example, the cosine is capable of being generated by the sine. The trigonometric processing element was tasked to perform twelve standard functions; i.e. six forward and six inverse. The preliminary hardware/software trade-off shown in Figure 7-11 dictated that the function generator be implemented in a hardwired or firmware solution.

7.2.3 EXPONENTIAL/LOGARITHMIC PROCESSING ELEMENT

The exponential/logarithmic processing element was analyzed with the same rationale as the arithmetic processing element. Various grouping effects were studied from a hardware/software implementation aspect. The function is not amenable to a software implementation due to the speed of operation compared to the required speed of operation. The results of the preliminary hardware/software trade-off are shown in Figure 7-12. The grouping effects for the exponential/logarithmic functions are shown in Figure 7-13. The grouping effects determined that single function element may be utilized.

FUNCTIONAL LEVEL	HARDWARE			SOFTWARE		
	IC'S	POWER	SPEED	SUB-ROUTINE	BYTES	SPEED
FUNCTION. GEN	40	4 W	250 NS	3	64	463 μS

Figure 7-11. Trigonometric Element Hardware/Software Trade-Off

FUNCTIONAL LEVEL	HARDWARE			SOFTWARE		
	IC'S	POWER	SPEED	SUB-ROUTINE	BYTES	SPEED
GROUPED	6	3.1 W	45 NS	2	18	23.0 μS

Figure 7-12. Exponential Element Hardware/Software Trade-Off

LEVEL	INSTRUCTIONS PER SECOND	IC'S	ARRAY POSITIONS	PROCESSING TIME	ELEMENT RATE
Y^X, e^X, $\ln x$, $\log_A X$	16×10^6	24	4	45×10^{-9} SEC	22×10^6
e^X, $\ln x$	8×10^6	18	2	45×10^{-9} SEC	22×10^6
(e^X, $\ln x$)	4×10^6	10	1	45×10^{-9} SEC	22×10^6

Figure 7-13. Exponential Level of Decomposition Effects

The preliminary levels of decomposition determined that each generic class could be implemented as single processing elements. The preliminary analysis also established the basic machine cycle period. The basic machine cycle period was determined by the trigonometric processing element. This element required an execution time of 250 nanoseconds. Since the arithmetic and exponential/logarithmic functions required less execution time, the trigonometric processing element established the cycle due to the pipeline concept dictated by Task II.

7.2.4 DESIGN SELECTION CRITERIA

The isolation of each processing element to a hardwired or firmware solution required a set of evaluation criteria.

The criteria utilized in the design trade-off were:

- Design Complexity
- Flexibility
- Capability
- Preprocessing Requirements
- Power
- Frequency
- Physical Size
- Weight

Design complexity is the engineering effort required to realize a particular approach. The design complexity centered on:

- Design Difficulty
- Fabrication
- Test Complexity

The composite man-hours reflect directly into cost and indirectly into size.

The second category is functionality. This category includes:

- Flexibility
- Capability
- Pre-processing Requirements

Flexibility is the number of functions that may be achieved utilizing the approach. For example, the design enables the function, $\sum AX + B$ to be executed regardless of the technique. However, one design allows a minimum of 10 additional functions such as:

- A + B
- A - E

- $A \cdot X$
- $A \cdot X^{-1}$

to be performed. An alternate design approach enables an additional eight functions to be achieved. Capability is the ability of the design approach to assume the functions of the other generic classes. This parameter is important in establishing the overall capacity of the central processing unit. The final parameter is the amount of pre-processing required to realize the function, e.g. table computation, argument pre-conditioning.

The final category is the classical operational parameters. The flight status of the On Board Experiment Data Support Facility required these parameters be given careful consideration. Significant aspects for a space qualified system are the power dissipation and volume. These parameters were relaxed for the space shuttle.

Each design approach was modeled using the previously computed technology parameters shown in Section 7.1 Table 7-4. These parameters were reflected on a scale from one to ten relative to the design parameters. Three design approaches were considered for each processing element.

- Polynomials
- Firmware
- Special Purpose

The polynomial solution which is described in detail in Appendix C, is a long standing mathematic approach in numerical analysis. This solution required a second order spline* to be fabricated which did not appear feasible until recently. The technology for this approach is currently available as well as the increased demand for such a capability. The polynomial provides a unique approach to problem solving and is oriented to a Large Scale Integration (LSI) approach. The firmware and special purpose solutions are specific designs while the polynomial is a more general purpose approach.

7.2.3 PROCESSING ELEMENT DESIGN

The arithmetic processing element was analyzed for a polynomial, firmware, and special purpose design approach. The model parameters for each design shown in Figure 7-14 are based on the conceptual design shown in Figure 7-15. The polynomial provides the maximum functionality but only intermediate signal processing rates. This approach requires a maximum power of almost six watts so that for large arrays

* See Appendix C

PARAMETER \ MODEL	VALUE		
	POLY	F/W	H/W
DESIGN COMPLEXITY	430 MHRS	550 MHRS	330 MHRS
FUNCTIONALITY	30 INST	24 INST	16 INST
OPERATIONAL			
POWER	6 W	25 W	3 W
FREQUENCY	4 MHz	3 MHz	6 MHz
WEIGHT	0.5 LBS	0.5 LBS	0.5 LBS
SIZE	1 BOARD	1 BOARD	1 BOARD

Figure 7-14. Arithmetic Element Model Parameters

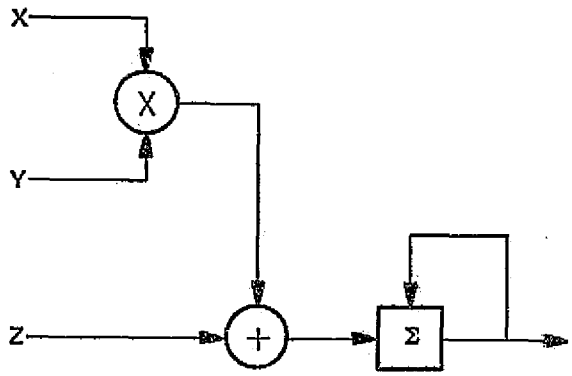

Figure 7-15. Conceptual Design for Arithmetic Element

thermal disadvantages are encountered. The firmware solution although characterized by low power and a medium to high functionality, exhibits a marginal high frequency capability. All approaches possess a relative design complexity. The scaled parameters shown in Figure 7-16 determined that a special purpose design be utilized for the arithmetic processing element. These values although unweighted were considered primarily with respect to the functionality and operational characteristics. The special purpose design modeled at the conceptual level possessed a high composite score and a capability to perform 6.3×10^6 operations per second.

PARAMETER \ MODEL	SCORE		
	POLY	F/W	H/W
DESIGN COMPLEXITY	8	6	10
FUNCTIONALITY	10	8	5
OPERATIONAL			
POWER	5	1	10
FREQUENCY	7	4	10
WEIGHT	-	-	-
SIZE	-	-	-

Figure 7-16. Scaled Parameters

The conceptual design was further analyzed to generate the functional block diagram shown in Figure 7-17. The arithmetic processing element is composed of three distinct functions

- Multiplier/Divider
- Adder/Subtractor
- Accumulator

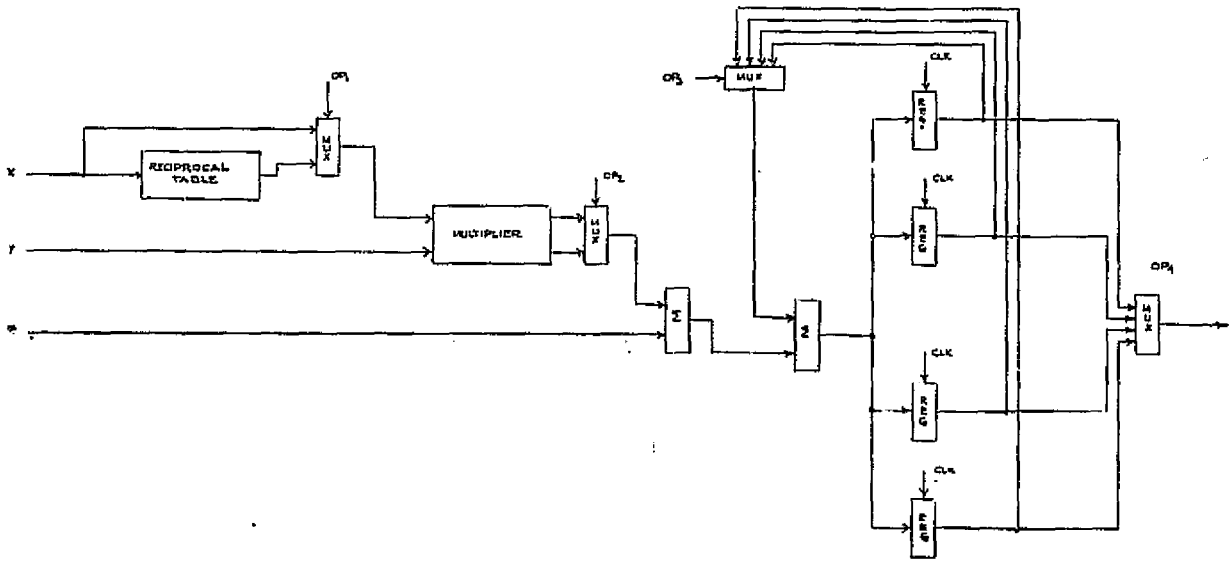

Figure 7-17. Arithmetic Processing Element

These functions are ordered to yield a capability to perform the following arithmetic functions:

- $X + Y$
- $X - Y$
- $X \cdot Y$
- $X \cdot Y^{-1}$
- $X \cdot Y^{-1} + Z$
- $X \cdot Y^{+1} + Z$
- $X \cdot Y - Z$
- $X \cdot Y^{-1} - Z$

- $\Sigma (X + Y)$
- $\Sigma (X - Y)$
- $\Sigma (X \cdot Y)$
- $\Sigma (X \cdot Y^{-1})$
- $\Sigma (X \cdot Y + Z)$
- $\Sigma (X \cdot Y^{-1} + Z)$
- $\Sigma (X \cdot Y - Z)$
- $\Sigma (X \cdot Y^{-1} - Z)$

The division capability is accomplished by a reciprocal multiplication. This technique computes the reciprocal of the input variable by means of a table. The table possesses a scale factor for the multiplication. Further, a binary scale factor utilized enables the correct quotient to be obtained without shifting.

The trigonometric processing element was modeled for three solutions with the parameters shown in Figure 7-18. The parameters indicated that a firmware or special purpose solution should be considered. The polynomial although theoretically a simple solution requires the trigonometric value to be computed using a power series approximation. This series possesses serious drawbacks as the quadrant extremes are approached. The scaled parameters shown in Figure 7-19 determined that a firmware solution be implemented for the trigonometric processes. The conceptual design for the firmware approach is shown in Figure 7-20. The processing element is composed of three distinct parts.

PARAMETER \ MODEL	VALUE		
	POLY	F/W	H/W
DESIGN COMPLEXITY	430 MHRS	330 MHRS	410 MHRS
FUNCTIONALITY	30 INST	24 INST	12 INST
OPERATIONAL			
POWER	5 W	6 W	4 W
FREQUENCY	4 MHz	5 MHz	7 MHz
WEIGHT	0.5 LBS	0.5 LBS	0.5 LB
SIZE	1 BOARD	1 BOARD	1 BOARD

Figure 7-18. Trigonometric Element Model Parameters

- Quadrant Analyzer
- Argument Tables
- Divider

PARAMETER \ MODEL	SCORE		
	POLY	F/W	H/W
DESIGN COMPLEXITY	7	10	8
FUNCTIONALITY	10	8	4
OPERATIONAL			
POWER	8	6	10
FREQUENCY	6	8	10
WEIGHT	-	-	-
SIZE	-	-	-

Figure 7-19. Scaled Parameters

The quadrant analyzer normalizes the input variables to a first quadrant and retains the original quadrant. The input argument may be expressed in degrees, radians, or decimal degrees. The inverse parameter is a binary number. The argument table provides the first level of conversion required. The divider manipulates these arguments to generate the desired functions. The conceptual design was further developed to generate the functional block diagram shown in Figure 7-21. The significant feature of this approach is the firmware divider. This function minimizes the need for tables and limited resolution and is economic for large arguments. Although the firmware solution requires large memories, current technology renders this approach totally feasible. This design enables the trigonometric function generator to perform the following:

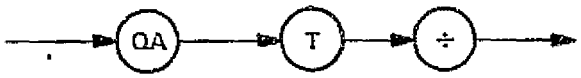

Figure 7-20. Trigonometric Element Conceptual Design

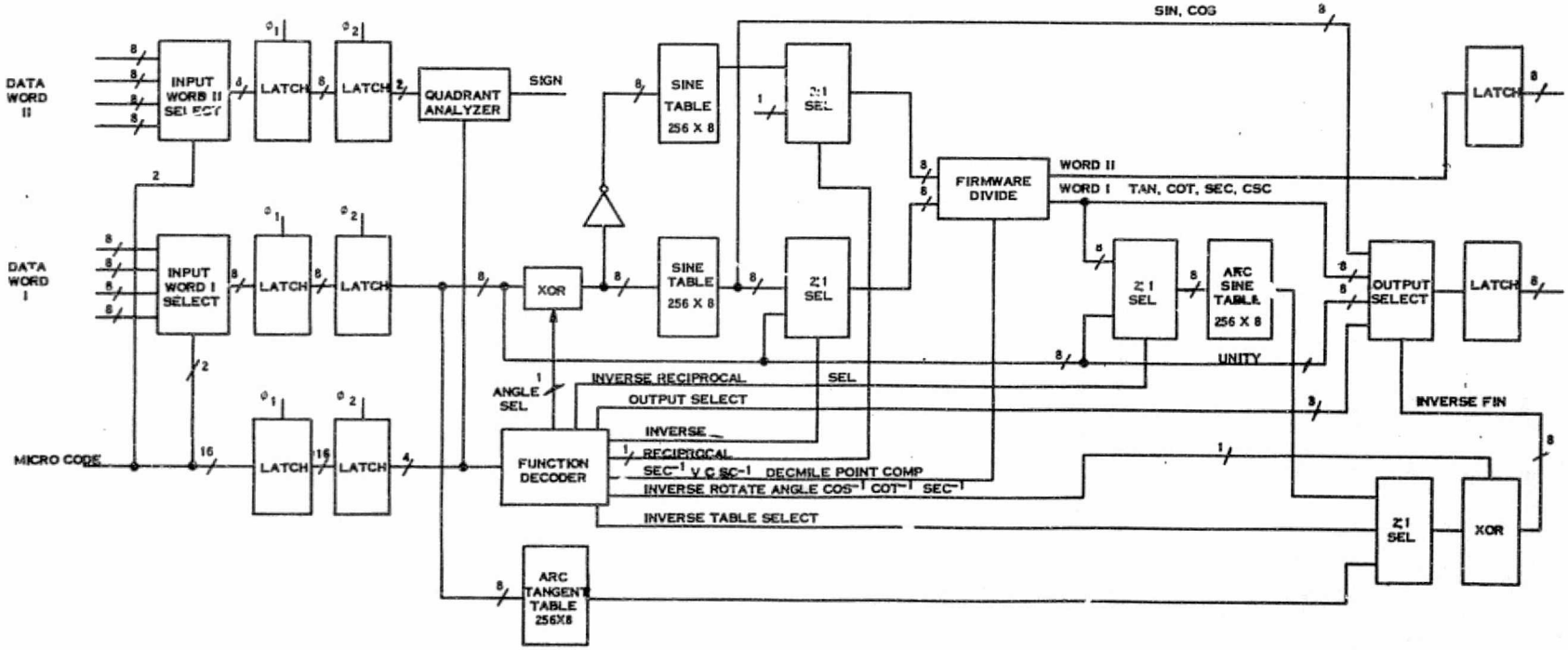

Figure 7-21. Trigonometric Function Generator Block Diagram

- SIN X
- COS X
- TAN X
- COTAN X
- COSECANT X
- SECANT X

- $SIN^{-1}X$
- $COS^{-1}X$
- $TAN^{-1}X$
- $COT^{-1}X$
- $CSC^{-1}X$
- $SEC^{-1}X$

A trade-off between the candidate exponential/logarithmic function generator models resulted in the design parameters shown in Figure 7-22. The design analysis indicated that the firmware solution exhibited the best properties. The significant advantage is high speed and low power requirement. The scaled parameters shown in Figure 7-23 confirm the firmware solution. The conceptual design for the element is shown in Figure 7-24. The function generator is composed of two distinct parts.

- Logarithm Generator
- Exponential Generator

The exponential/logarithmic conceptual design was further developed to generate the functional block diagram shown in Figure 7-25. The functional block diagram provided an additional capability than the required natural logarithm and exponential. This design approach provides a capability to perform the following functions:

- ln x
- Y ln x
- $Y e^{x}$
- e^{x}

PARAMETER \ MODEL	VALUE		
	POLY	F/W	H/W
DESIGN COMPLEXITY	240 MHRS	170 MHRS	250 MHRS
FUNCTIONALITY	30 INST	4 INST	2 INST
OPERATIONAL			
POWER	7 W	3 W	6 W
FREQUENCY	4 MHz	22 MHz	7 MHz
WEIGHT	0.5 LB	0.5 LB	0.5 LB
SIZE	1 BOARD	1 BOARD	1 BOARD

Figure 7-22. Exponential Element Model Parameters

PARAMETER \ MODEL	SCORE		
	POLY	F/W	H/W
DESIGN COMPLEXITY	7	10	6
FUNCTIONALITY	10	2	1
OPERATIONAL			
POWER	4	10	5
FREQUENCY	2	10	3
WEIGHT	-	-	-
SIZE	-	-	-

Figure 7-23. Scaled Parameters

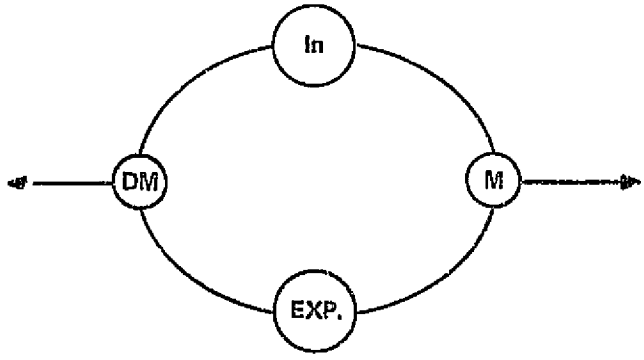

Figure 7-24. Conceptual Design

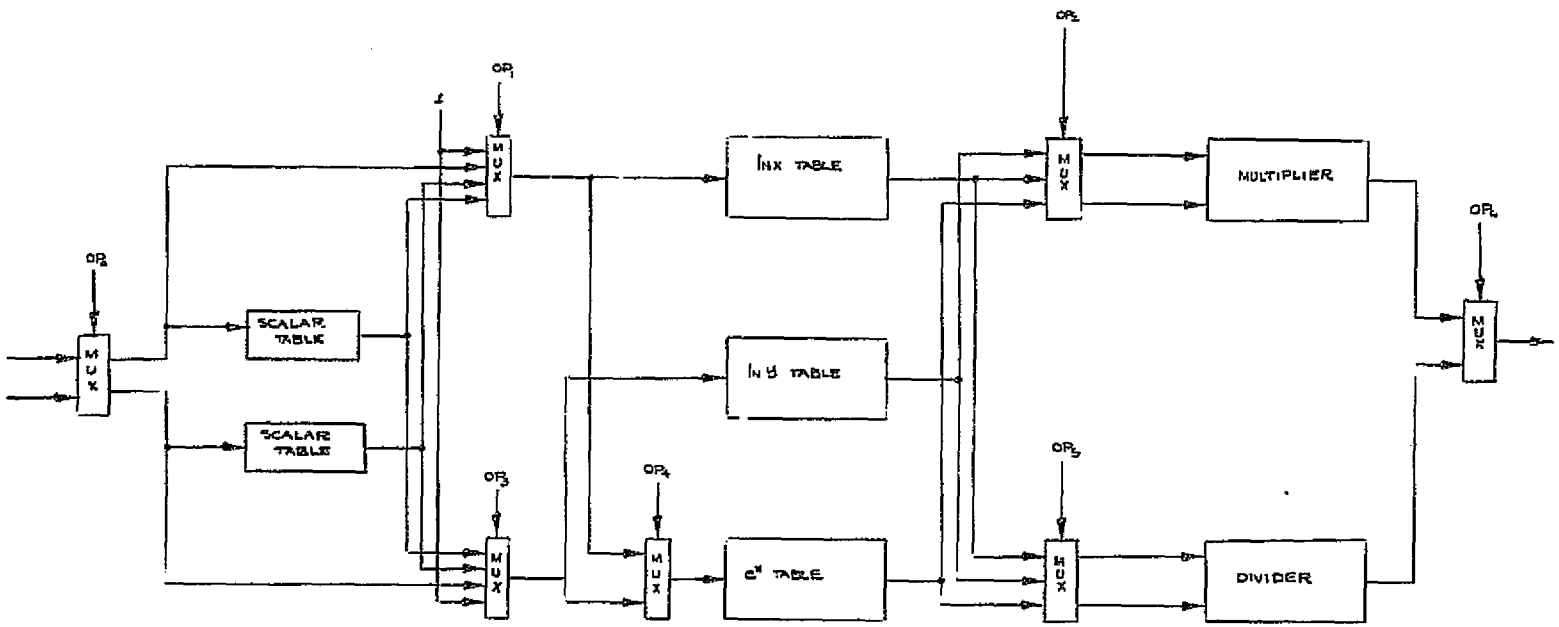

Figure 7-25. Exponential Processing Element

These functional diagrams were based on the requirement to:

- Minimize Hardware
- Maximum Flexibility
- Maximum Operational Speed

Each element operates internally in double precision so that trigonometric and exponential/logarithmic values exceed the accuracies available in standard mathematical tables. For example, the trigonometric generator is capable of computing an angle to an accuracy better than an arcsecond.

7.2.6 ARRAY SIZE

The processing element characteristics, as well as the number and nature of the sensors that must be processed, provide a prime driver on the array size. The central processing unit capacity is determined by:

- Number of Paths Available
- Processing Element Characteristics
- Operational Characteristics

The number of available pipelines or paths is directly dependent on the permissible data flow within the matrix. Four permissible flows are shown in Figure 7-26. The calculations of the number of paths available is based on a spawning technique. This spawning is described in the following manner. The number of paths is determined by the number of signals entering a node and the number of exits from the node. For example a node receives three signals which it transmits to a different node. This node receives these signals plus three other signals so that six paths are spawned. The number of paths spawned for various flows and array sizes is shown in Figure 7-27. The addition of the diagonal flow determined that the maximum permissible paths were obtained with a square array. The pathing is maximized by the presence of a feedback diagonal which provides the maximum mobility through the array. The bi-directional flow results in the infinite paths. The number of paths available is important during multi-sensor operations since it minimizes the interference between two sensors with respect to a data flow.

The second consideration in the array size is the number of sensors that may be processed. Assuming that a process is available within the desired path the number of sensors that an array can process is proportional to:

REPRODUCIBILITY OF THE
ORIGINAL PAGE IS POOR

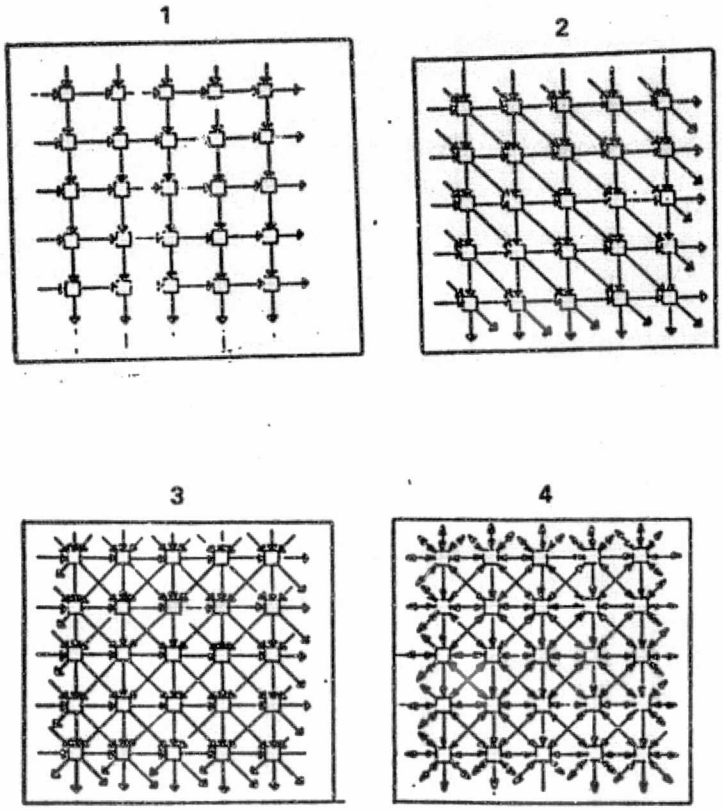

Figure 7-26. Spawning Diagrams

Array Size	Flow 1	Flow 2	Flow 3	Flow 4
2 x 2	8	9	16	→ ∞
3 x 3	34	51	193	→ ∞
4 x 4	130	275	2233	→ ∞
5 x 5	488	1485	28494	→ ∞
6 x 6	1834	8085	325767	→ ∞
7 x 7	6928	44359	4241231	→ ∞
8 x 8	26310	244925	48805081	→ ∞
9 x 9	100384	1359521	518232964	→ ∞

Figure 7-27. Number of Paths as a Function of Array Size and Flow Pattern

$$\frac{\text{(Array Size) (Element Rate) (Efficiency)}}{\text{Composite Sensor Rate}}$$

The payloads versus array-size is shown in Figure 7-28. The estimated payload of 30 composite sensor B types dictates that a 4 x 4, 5 x 5, or 6 x 6 array with a 250 nanosecond machine cycle are within the limits of the concept. These sizes are characterized by discrete input/output ports which may require additional hardware.

MACHINE CYCLE PERIOD

Array Size	1.0 μs	0.750 μs	0.500 μs	0.250 μs
2 x 2	1.67	2.23	3.34	6.71
3 x 3	3.77	5.03	7.52	15.05
4 x 4	6.71	8.93	13.51	27.03
5 x 5	10.45	13.95	20.92	41.84
6 x 6	15.15	20.08	30.30	62.5
7 x 7	20.49	27.32	40.98	81.97
8 x 8	26.81	35.71	53.76	111.11
9 x 9	34.48	45.25	68.03	142.85

Figure 7-28. Number of Sensors Processed as a Function of Array Size and Speed

The machine cycle period and the array size determine the number of operations per second that the array is capable of performing. The operational characteristics for various array sizes with various machine cycle periods are shown in Figure 7-29. The operational capacity is given by:

$$f\ \text{array} = \frac{\text{(Array Size) (Efficiency)}}{\text{(Machine Cycle Period)}}$$

The 5 x 5 array provides a data rate amenable to the anticipated needs of the On Board Experiment Data Support Facility. These characteristics are shown in Figure 7-30. The parameters indicate that a 5 x 5 array is the required matrix size. The 5 x 5 provides the additional aspects of power and volume savings when arrays are cascaded.

MACHINE CYCLE PERIOD

Array Size	1.0 μs	0.750 μs	0.500 μs	0.250 μs
2 x 2	$4x10^6$	$5.3x10^6$	$8x10^6$	$16x10^6$
3 x 3	$9x10^6$	$12x10^6$	$18x10^6$	$36x10^6$
4 x 4	$16x10^6$	$21.3x10^6$	$32x10^6$	$64x10^6$
5 x 5	$25x10^6$	$33.3x10^6$	$50x10^6$	$1x10^8$
6 x 6	$36x10^6$	$48x10^6$	$72x10^6$	$1.4x10^8$
7 x 7	$49x10^6$	$65.3x10^6$	$98x10^6$	$1.9x10^8$
8 x 8	$64x10^6$	$85.3x10^6$	$1.28x10^8$	$2.5x10^8$
9 x 9	$81x10^6$	$1.08x10^8$	$1.62x10^8$	3.2x10

Figure 7-29. Operations/Second

SIZE	ARITH	TRIG	EXP	INPUT PORTS	OPS/SEC	$PATH^{-1}$	SENSORS	MICRO-CODE WORDS 1 SEC	BITS
2 X 2	2	1	1	10	$1.6 X 10^7$	$6.2 X 10^{-2}$	6	$1.6 X 10^6$	96
3 X 3	7	1	1	16	$3.6 X 10^7$	$5.2 X 10^{-3}$	15	$3.6 X 10^7$	216
4 X 4	12	3	1	22	$6.4 X 10^7$	$4.4 X 10^{-4}$	26	$6.4 X 10^7$	384
5 X 5	20	4	1	28	$1.0 X 10^8$	$3.5 X 10^{-5}$	41	$1.0 X 10^8$	600
6 X 6	28	6	2	34	$1.44 X 10^8$	$5.6 X 10^{-6}$	60	$1.4 X 10^8$	864
7 X 7	39	8	2	40	$1.96 X 10^8$	$2.4 X 10^{-7}$	81	$1.9 X 10^8$	1176
8 X 8	51	11	2	46	$2.56 X 10^8$	$1.7 X 10^{-8}$	70	$2.5 X 10^8$	1536
9 X 9	64	14	3	52	$3.24 X 10^8$	$1.9 X 10^{-9}$	135	$3.2 X 10^8$	1944

Figure 7-30. Matrix Size Analysis

The 5 x 5 array provides the following central processing unit characteristics:

- 25 Processing Elements
- 10^8 Operations/Second
- 28 Discrete Input Ports

- 28 Discrete Output Ports
- 20 Sensor Capacity (50% Efficiency)

7.3 MEMORY STRUCTURE

The selected design for the memory structure is based on separate data base memory and program memory which are of identical architecture. The dual memory structure provides a cost-effective and high reliability approach. The sensor processing requires a data base which typically contains:

- Constants
- Transfer Functions
- Calculated Parameters

The volume and nature of the data base is dependent on the specific sensor and process utilized. The data base requirement for the boundary and composite sensors is shown in Figure 7-31. The data buffer is the storage required to delay the primary and/or secondary sensor data. The nature of the buffer is discussed in the input/output analysis.

The data base analysis and design was governed by evaluation of parameters which include:

- Speed
- Data Sources

SENSOR	DATA BASE (WORDS)	DATA BUFFER (WORDS)
ATS	664	512
RAD/SCAT	50	637
IRS	128	16,065
CIMATS	10,179	3,915
SENSOR A	3,239	5,255
SENSOR B	3,561	5,848

Figure 7-31. Boundary and Composite Sensor Memory Requirements

- Addressing Modes
- Size

Four candidate approaches were evaluated using the result of these evaluations.

- Data is Contained in Main Program
- Central Library
- Central Library with Caches
- Central Library with Caches and Scratch Pads

Each approach is discussed below.

Main Program Contained Data. This approach requires that the micro-instruction transmitted to each arithmetic processing element contain the required coefficients. Consequently, a portion of the micro code must be reserved for these parameters whether they are required or not. This principle increases the program memory width by two words (32 bits). The major disadvantage is the lack of ability to share constants between processing elements, thereby resulting in a high degree of redundancy. In addition, a complex storage and retrieval module is required to place data-dependent constants within the program memory. The design complexity of the storage and retrieval is very similar to the stack or interrupt capability utilized on conventional digital computers. The interactive nature of the data base for sensor processing does not lend itself to a program-contained data base unless a general purpose computer is utilized.

Centralized Library. The central library approach is based on a block of memory independent of the program memory that contains all data required for the processes. This approach provides the capability for each processing element to share common parameters. The memory size is minimized since each constant is stored in a single location. Further, the library may be modular allowing only the memory required for a given mission to be attached, minimizing the volume and power requirements. The major drawback is the rate at which the memory must operate. Hypothetically, each arithmetic processing element may be required to fetch a constant or set of constants every machine cycle. For the 5 x 5 array, the central memory would require a 10 nanosecond cycle time. This value is not within the current or near-term state-of-the-art. On this basis the single centralized memory concept was rejected.

Central Library with Cache. Cache techniques have demonstrated their usefulness in Stochastic and Bayesian machines. The data base is capable of being segmented into high frequency utilization and low frequency utilization parameters. The cache technique is based on using a small high speed memory for each row or column of the CPU. The central library updates the caches with the constants on the low frequency parameters while the processing elements access the cashes. The required cycle time for the central library is then given by:

$$T_{cycle}(\text{Library}) = \frac{T_{cycle}(\text{Machine})}{(\text{Number of Cashes})\ (\text{Words Updated/Cache})}$$

and the cycle time for the cache:

$$T_{cycle}(\text{Cache}) = \frac{T_{cycle}(\text{Machine})}{(\text{Processing Elements})\ (\text{Words Fetched/Element})}$$

For the 5 x 5 array, these parameters are

$$T_{cycle}(\text{Library}) = 50 \text{ nanoseconds (statistical)}$$

and

$$T_{cycle}(\text{Cache}) = 25 \text{ nanoseconds (worst case)}$$

The additional memory required for the cache is insignificant with respect to the total memory. This approach allows constants shared in the central memory to be shared by all the processing elements. However, data-dependent parameters are capable of being shared directly with only those processing elements that communicate directly with the cache in which the parameter is stored. An indirect sharing is permissible by fetching the parameter from the cache and routing through the array and storing it in the desired cache. This scheme requires external feedback due to the monotonic data flow; i.e. data fetched from cache j can only be routed to caches j + n where j is the row or column. Finally, the library memory cycle is available with current technology while the cache cycle time is within the parameters for projected technologies.

Centralized Library with Cache and Scratch Pad. The centralized library with cache and scratch pad is both a logical and physical extension of the central library with a cache. This technique provides a small scratch pad for each arithmetic processing element. The data base is statistically partitioned such that

REPRODUCIBILITY OF THE ORIGINAL PAGE IS POOR

the cache contains the medium frequency utilized parameters while the scratch pad contains the high frequency utilized parameters. This technique provides an easy means for storing and transmitting data-dependent parameters. The required cycles times are

- $T_{cycle}(\text{Library}) = \dfrac{T_{cycle}(\text{Machine})}{(\text{Number of Cache})\ (\text{Words/cache update})}$
- $T_{cycle}(\text{Cache}) \cdot \dfrac{T_{cycle}(\text{Machine})}{(\text{Number of Scratch Pads})\ (\text{Words/update})}$
- $T_{cycle}(\text{Scratch Pad}) = \dfrac{T_{cycle}(\text{Machine})}{(\text{Words/Fetch})}$

For the 5 x 5 array, these parameters are

- $T_{cycle}(\text{Library})$ = 50 nanoseconds (statistical)
- $T_{cycle}(\text{Cache})$ = 50 nanoseconds (statistical)
- $T_{cycle}(\text{Scratch Pad})$ = 125 nanoseconds (worst case)

The parameters provide a realistic and feasible approach resulting in a hierarchical memory. The analysis summary for these approaches is shown in Figure 7-32. The analysis determined that the primary memory structure should be the central library with a cache and scratch pad.

The functional block diagram for the data base memory shown in Figure 7-33 provides a scratch pad for each arithmetic processing element. The scratch pads are the key to the functional power. Each scratch pad is a two part read-while-write memory capable of being addressed by:

	INSTRUCTIONS PER SECOND	MEMORY SIZE (TOTAL)	WORDS	PARALLEL PATH	SEQUENTIAL PATH
PROGRAM CONTAINED	1.0×10^8	32 X L*	2 N	800 BITS	32 BITS
CENTRAL LIBRARY	8.0×10^7	20 K	20	640 BITS	32 BITS
W/CACHE BASIS	2.0×10^7	21.2 K	5**	160 BITS	32 BITS
W/SCRATCH PAD	4.0×10^6	23.4 K	2	32 BITS	32 BITS

* L = LENGTH OF PROGRAM
** 5 = MAXIMUM – 3 TYPICAL
N = NUMBER OF ARRAY ELEMENTS

Figure 7-32. Analysis Summary

REPRODUCIBILITY OF THE ORIGINAL PAGE IS POOR

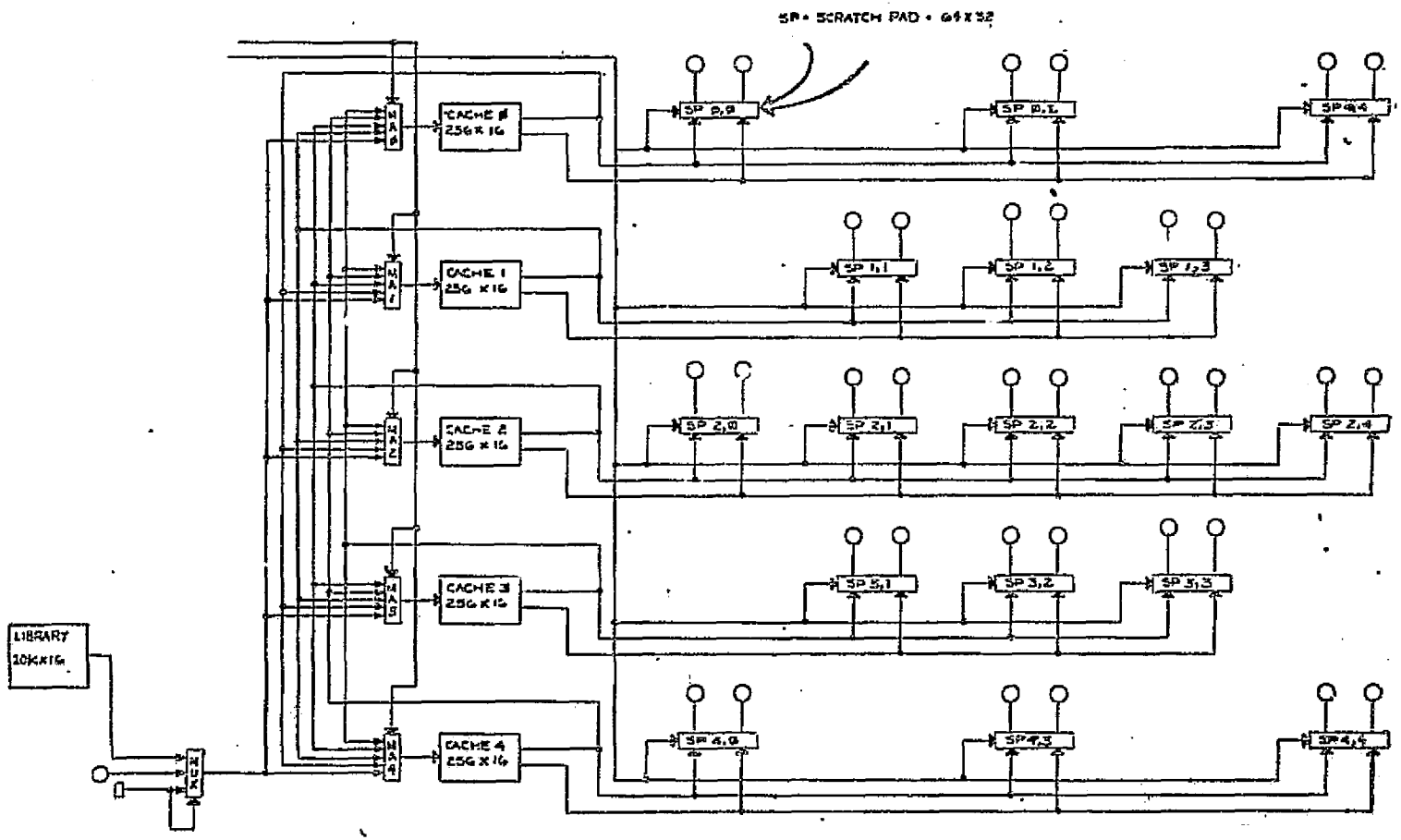

Figure 7-33. Data Base Memory Distribution Architecture

- processing elements
- cache
- program counter

The program memory structure shown in Figure 7-34 is identical to the data base memory structure. The two structures differ slightly in reality. The program memory micro instruction registers which are the analog of the data base memory scratch pads, are addressable only by the program caches, termed row controllers. Both the main memory and library are modular in nature.

7.4 INPUT/OUTPUT STRUCTURE

The On Board Experiment Data Support Facility must be capable of interfacing with a wide range of sensors. These sensors vary in design, mission, and frequency of operation and are normally asynchronous on a sensor-to-sensor basis. The input/output requirements are shown in Figure 7-35

- REQUIREMENTS
  - MULTIPLE SENSORS AT DIFFERENT FREQUENCIES
  - ASYNCHRONOUS AND SYNCHRONOUS INPUTS
  - OUTPUT DATA RATE SYNCHRONIZED TO INPUT
  - NO FILL DATA IN OUTPUT DATA STREAM
  - NO REPETITION OF DATA IN OUTPUT DATA STREAM

Figure 7-35. Input/Output Requirements

In addition to the varying frequency range and asynchronous relationship, the output data must be synchronized to the input data rate to maintain a continuous data flow. Based on these requirements three design approaches were considered:

- Sensor Synchronized to OEDSF
- OEDSF Synchronized to High Frequency Sensor
- Asynchronous Data Transfer

Sensor Synchronized to OEDSF. The block diagram for this approach shown in Figure 7-36 is composed of three major components

- sensor
- scaler
- array

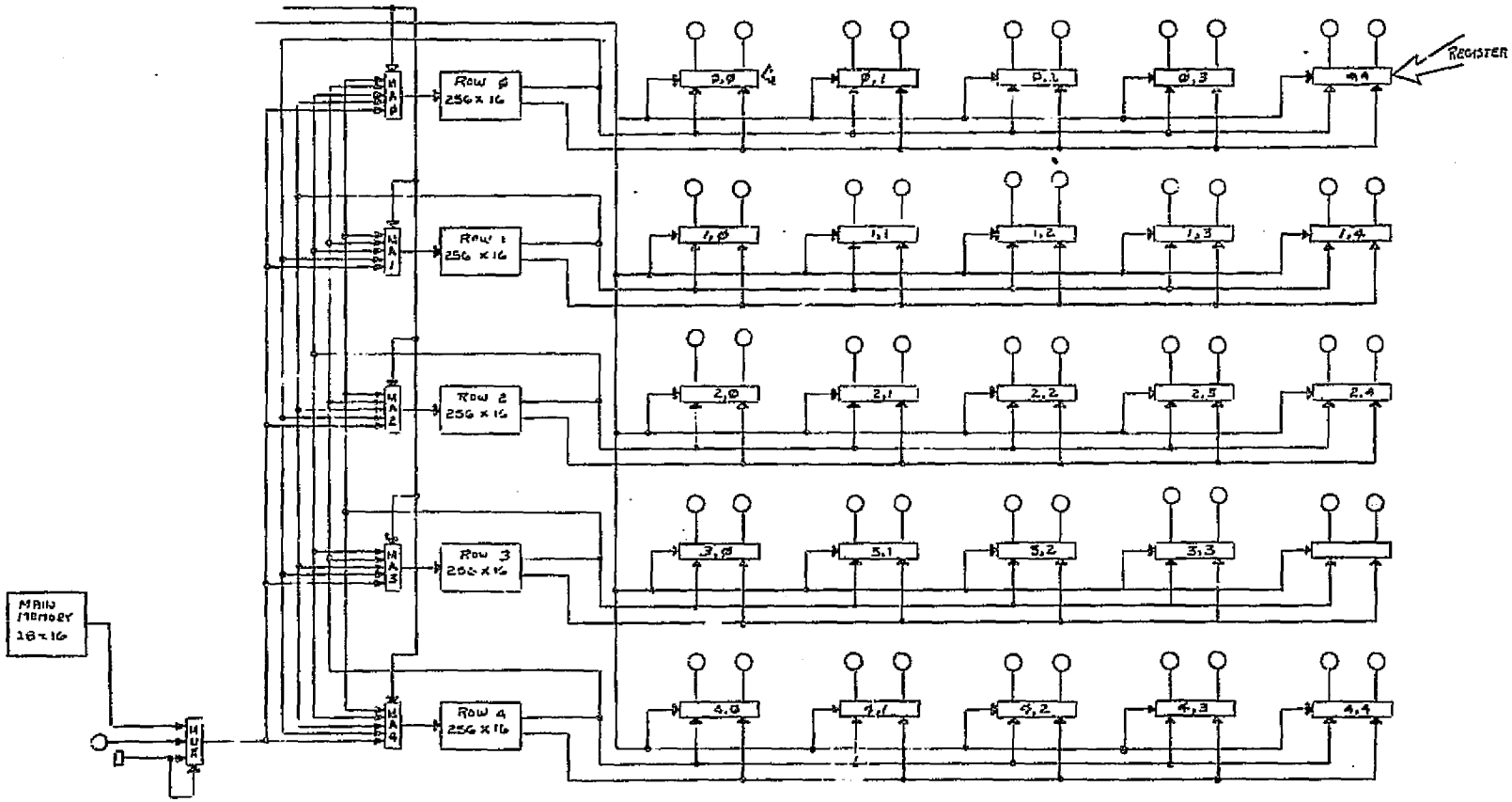

Figure 7-34. Control Memory Distribution Architecture

REPRODUCIBILITY OF THE
ORIGINAL PAGE IS POOR

This technique requires the sensor to output data synchronously with the OEDSF. The array clock is scaled in a frequency divider and transmitted to the sensor. The approach simplifies the data transfer but requires the sensor operational frequency to be dependent on a scaled value of the array clock. This technique allows each array machine cycle to be optimized but requires the additional hardware (counters) for the scaling process. The amount of hardware required for scaling would be less than four 4-bit synchronous counters per port.

OEDSF Synchronized to High Frequency Sensor. The functional block diagram for this approach is shown in Figure 7-37. This technique requires the array to be synchronized to the highest frequency sensor by means of a phase lock loop. The frequency generated is rescaled and transmitted to the remaining sensors as in the first approach. The approach synchronizes the system to a sensor providing a simple data transfer and machine cycle optimization. The phase lock loop, however, presents the major drawback for the design. A stable and accurate phase lock loop requires a significant design and hardware effort to minimize the effects of phase jitter. In addition scalars are required for the remaining sensors.

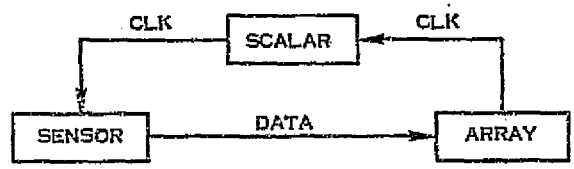

Figure 7-36. Block Diagram of Sensor Synchronized to OEDSF

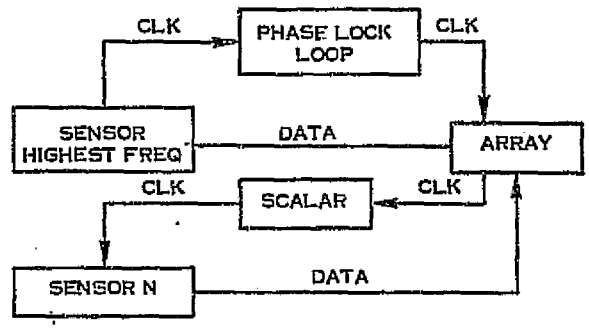

Figure 7-37. Block Diagram of OEDSF Synchronized to Sensor

Asynchronous Data Transfer. The conceptual design for the asynchronous mode is shown in Figure 7-38. The asynchronous transfer relaxes timing constraints for both the sensor and the array. The hardware required for this approach is minimized since only a single word interface buffer is required. The single word buffer results from the fact that the array clock processes many more cycles than the sensor clock; however, the machine cycle utilization is not optimized, the worst case condition being 50%. This technique requires a sensing circuit to determine when a sensor word is available.

Figure 7-38. Asynchronous Operation

Each approach is suitable for the On Board Experiment Data Support Facility. The asynchronous data transfer, however, is the most applicable since it imposes no timing constraints on either the array or the sensor. The ability to minimize any impact on sensor design was a paramount factor in the OEDSF design. The functional block diagram for an asynchronous data transfer is shown in Figure 7-39. The input structure is composed of three major components

- Fi-Fo Buffer
- Register
- Synchronizer

The output structure is composed of three major components

- Scalar
- Register
- Synchronizer

The synchronizers detect the presence of a sensor data word or processed variable that is to be either received or transmitted. The input synchronizer sets a flag on the leading edge of the sensor data clock.

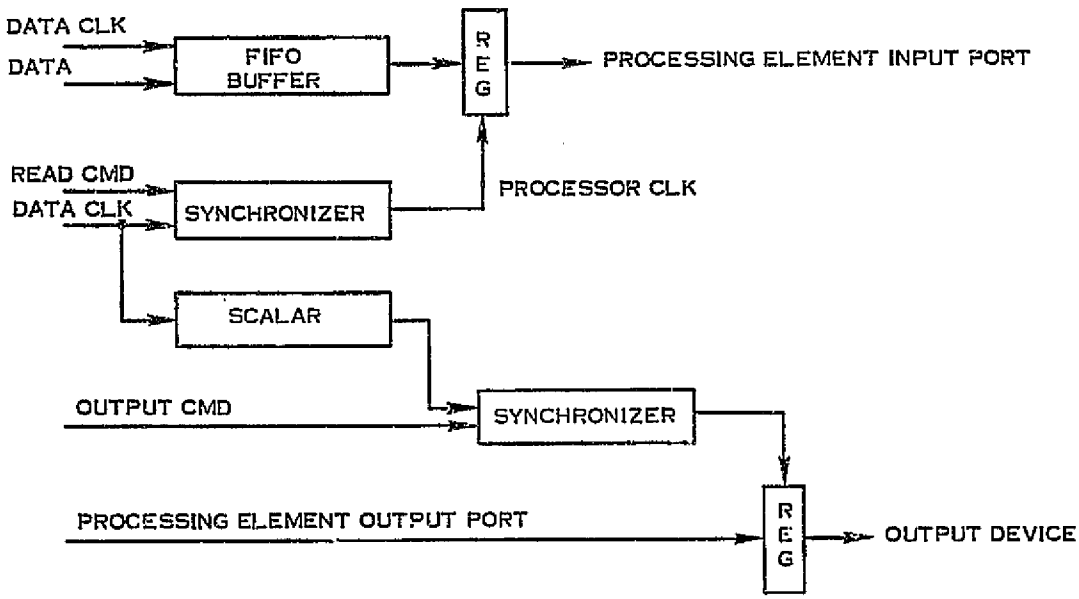

Figure 7-39. Input/Output Structure

The array provides a read command to the required port synchronously with the array clock. The logical product of these parameters allows a word to be clocked into the array register. The output synchronizer operates in an identical manner except that the flag is set by the logical product of the array clock and the output ready command. The data is strobed into the register. In each case, the flag is reset by the active clock. The array clock is the active clock for the input and the scaled sensor data clock is the active clock for the output.

The registers are single word registers in which the data is stored until acted upon by a clock. The scalar is a frequency division capability. This function is required for processes that result in a data reduction through processing (such as the Radiometer/Scatterometer reduction factor of 90 to 1). The input sensor data clock is routed to the scalar where a frequency reduction is performed. The output data rate is given by

$$f\ out = \frac{f\ in}{N}$$

where N is an integer.

Only an integer scaling rather than rate multiplication is required since the reduction is performed on a word basis and each word is assigned an integer count. The output of the counter strobes the register containing the appropriate variable.

The FIFO buffer provides the data delay required in the processing of the data of certain sensors. Each sensor imposes a different delay requirement ranging from no delay to a full grid as with the IRS. Consequently, a modular buffer is incorporated at each input port. The asynchronous nature of First In/First Out Memories enhances the OEDSF-to-Sensor interface.

All input and output circuits of the On Board Experiment Data Support Facility are standard T^2L compatible. The inputs are buffered so that they constitute a single unit load (i.e. 2.4 v @ 40 ua, 0.4 v @ 1.6 ma). The buffered outputs are standard active pull-up with a full fanout capability. Level shifting may be required external to the OEDSF if the sensor side of the sensor/array interface point is not compatible with the logic family. The design interface point for the array is a FIFO input. The array, therefore, is capable of handling either bit serial or bit parallel data stream. This capability is programmably selectable.

7.5 BUS AND CONTROL STRUCTURE

The array is characterized by separate data and instruction buses. The data bus structure was discussed in the analysis of the Central Processing Unit. This section discusses the instruction bus. The instruction bus transmits the necessary control signals which enable each processing element to

- route up to three arguments
- receive from four processing elements

- transmit to four processing elements
- perform a given operation

The 5 x 5 matrix requires that 25 instructions be transmitted every machine cycle. The micro-code required to control the inter processing and intra processing elements has been established at twenty four bits. The micro-code bit allocation is shown in Figure 7-40. This code requires four bits for data routing and the remaining twenty bits for processing element control. The scratch pad operation code is used only in the arithmetic processing elements but is assigned a reserved location in the code.

The transmission of the micro-code from the main memory to each processing element utilizes the hierarchical memory structure discussed in Section 6.1. There are two approaches for the array bus structure:

- Multiplexed
- Discrete

The multiplexed transmission requires a minimum of transmission lines between the row control memory and the instruction registers; however, the strobing of the instruction into the register requires a set of synchronizing strobes. Each register must be strobed consecutively. This approach requires a factor of

BITS	MNEMONIC	FUNCTION
$a_0 - a_1$	ASCC	ARGUMENT SELECT CONTROL CODE
$a_2 - a_3$	PERC	PROCESSING ELEMENT ROUTE CODE
$a_4 - a_6$	SPOC	SCRATCH PAD OPERATION CODE
$a_7 - a_8$	FCCC	FIXED CONSTANT CONTROL CODE
$a_9 - a_{17}$	FOCC	FUNCTION OPERATION CONTROL CODE
$a_{18} - a_{19}$	OBSC	OUTPUT BYTE MANIPULATION CODE
$a_{20} - a_{21}$	I ARC	INITIALIZE AND RESET CONTROL
$a_{22} - a_{24}$	SPARE	

Figure 7-40. Micro-Code Partitioning

5 increase in the row controller memories. The utilization of separate instruction buses increases the design complexity by a factor of 5 caused by the additional number of interconnections and the number of memory components; however, the significant advantage of separate buses is the reduced memory cycle time required. The number of components is largely determined by the memory organization. Current and future memories are organized to have a large number of words with each word containing a small number of bits.

The summary shown in Figure 7-41 led to the selection of a multiplexed bus structure. The multiplexed approach required the functional block diagram for those processing elements that possess a scratch pad as shown in Figure 7-42. The storage address, data base, and indice select are micro controllable parts that are unique to these processing elements. The functional block diagram for those processing elements which do not require scratch pads is shown in Figure 7-43.

APPROACH	MINIMUM REQUIRED SPEED	EXTERNAL PE CONNECTIONS
MULTIPLEXED	20 MEGA-WORD/SEC	120
SEPARATE	4.0 MEGA-WORD/SEC	600

Figure 7-41. Comparison of Multiplexed and Separate Bus Architectures

Loading of Program into Processor. The program loading of the Onboard Experiment Data Support Facility is accomplished using a cassette reader and bootstrap loader. The cassette contains the machine code that must be stored in the OEDSF memory prior to processing any sensor data. The data contained on the cassette is developed by the index generation program or manually.

The data is organized on a byte basis for the cassette and must be stored in the memory on a word basis. Consequently, the data from the cassette is received by the OEDSF bootstrap loader and multiplexed to the proper memory locations. The organization of the data on the tape and the structure of the bootstrap loader are dependent on the detailed design of the program memory. For example, the instruction is partitioned into two major parts. The inter-element code and the intra-element code. These may be placed on the tape interleaved, multiplexed, or sequential depending on the detailed design of the memory. The bootstrap loader receives the data from the cassette reader in byte format and reformats the data into OEDSF words. This process is off-line so that relatively slow speeds may be used, e.g. 9600 BAUD. The data configuration is shown in Figure 7-44.

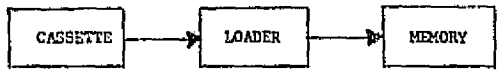

Figure 7-44. Sequence of OEDSF Program Loading

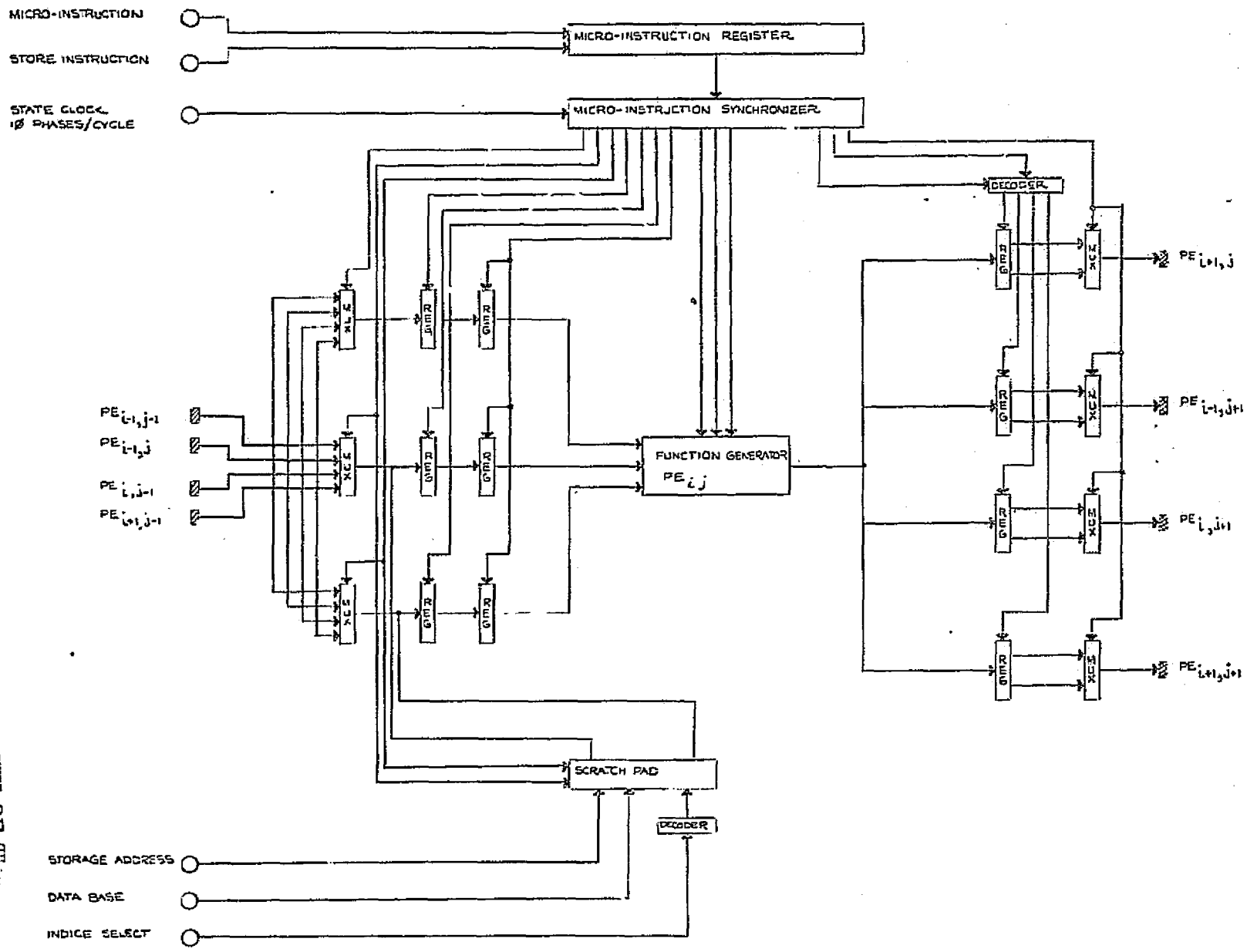

Figure 7-42. Functional Block Diagram for Elements With Scratch Pads

REPRODUCIBILITY OF THE ORIGINAL PAGE IS POOR

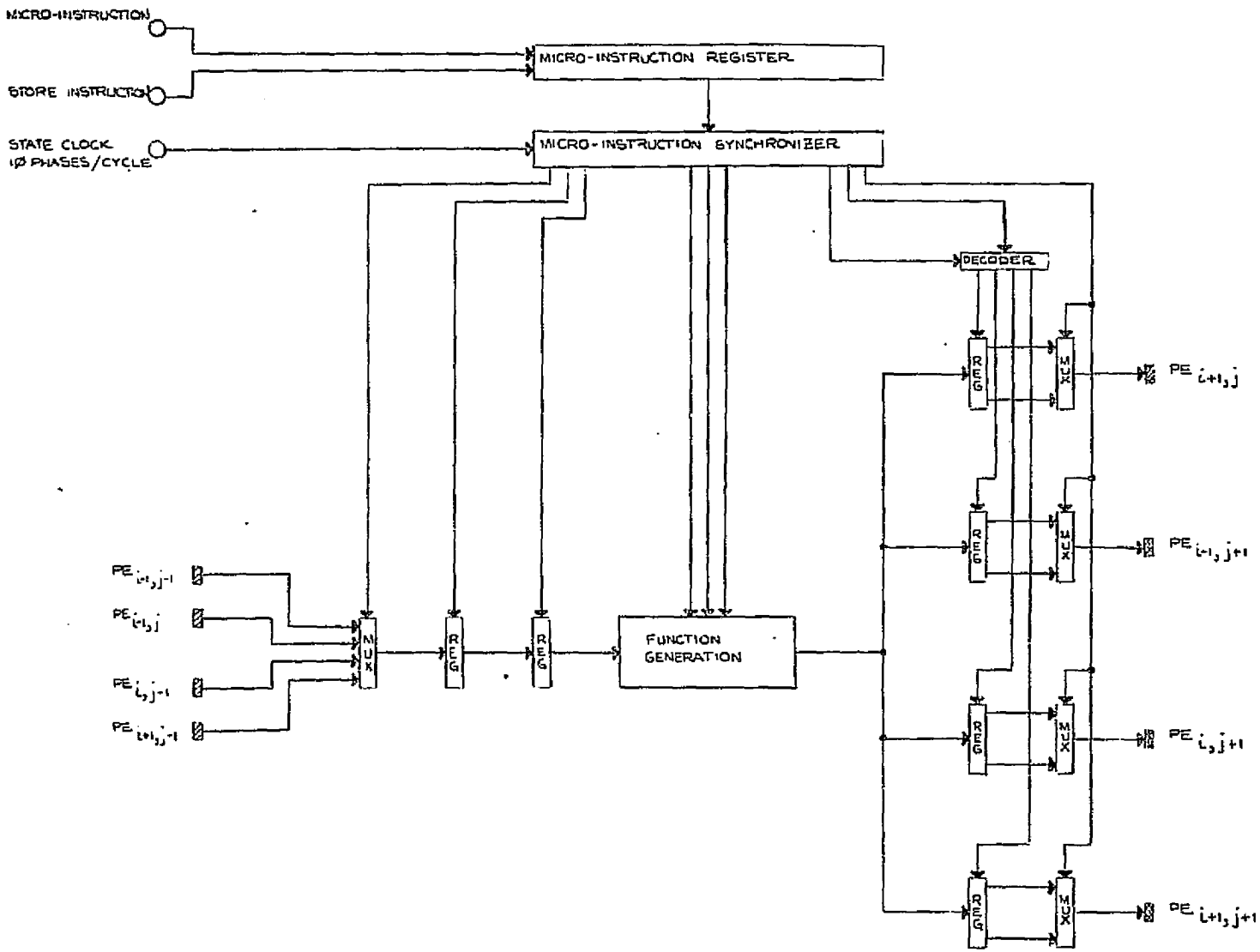

Figure 7-43. Functional Block Diagram for Elements without Scratch Pads

7.6 CONVENTION ANALYSES

The On Board Experiment Data Support Facility, like any machine, requires a binary convention, basic word size and processing precision. In addition, the numerical analysis orientation requires the selection of an arithmetic convention. This section treats the selection of:

- OEDSF Word Size
- Processing Precision
- Binary Convention
- Arithmetic Convention

The On Board Experiment Data Support Facility word size selection was based both on the sensor characteristics and the requirements for interfacing with external machines. The boundary sensors ranged from 8 bit words to 18 bit words with an average of 12 bits per word. The conventional machines that would be interfaced to the OEDSF are likely to be computers or standard computer peripherals. These machines are characterized by a 16 bit word. Therefore, the OEDSF was selected as a 16 bit machine.

Precision is the basic accuracy of computation that can be achieved without any program intervention. The level of precision determines the programming complexity and processing speed. The sensor processes are highly analytical so that the OEDSF error contribution to the process must be insignificant. The analysis for several modes of precision is shown in Figure 7-45. The significant aspect is the processing speed. This reduction for multiple levels is not a significant factor for low precision levels; i.e. single, double, or triple. The major drawback is the width of the required data path. A double precision capability results in an error contribution of one part in 2^{32} for the OEDSF. This contribution is an error of approximately 10^{-9} per computation. The double precision mode was selected for the OEDSF.

The numerical analysis must be performed in either a fixed point or floating point conventions. The comparison of these modes is shown in Figure 7-46. The Floating Point Mode is slower and characterized by a wide range. The fixed point is faster and characterized by less hardware. The fixed point convention was selected since floating point computations are possible at the macro level in the OEDSF by using the arithmetic and exponential/logarithmic processing elements.

PRECISION	ACCURAY	SPEED	DATA PATH	H/W	S/W	ROUNDING
SINGLE	$2^{-(N+1)}$	fo	N	N	N	NO
DOUBLE	$2^{-(2N+1)}$	0.9 fo	2N	2N	9N	YES
MULTIPLE	$2^{-(MXH+1)}$	fo-(0.1)(M-1)	MXN	MXN	$(2N^{M}+1)$	YES

N = NUMBER OF BITS IN PRIMARY WORD
M = LEVEL OF PRECISION

Figure 7-45. Machine Precision Analysis

CRITERIA / FORMAT	DOMAIN	POINT	ERROR ADDITION/SUBTRACTION	ERROR MULT/DIV	O.F.
FIXED POINT	2^{N}	fo	NO	NO	DETECTABLE
FLOATING POINT	$2^{(N+M)}$	$fo - 2Mf_1$	YES	YES	DIFFICULT TO DETECT

N - NUMBER OF BITS IN MANTISSA

M - NUMBER OF BITS IN CHARACTERISTICS

f_1 - SHIFT & COMPARE FREQUENCY SUCH THAT fo >> f.

Figure 7-46. Comparison of Fixed-and Floating Point Modes

The binary convention for the On Board Experiment Data Support Facility was based on the comparison shown in Figure 7-47. The convention exhibits various properties as shown in Figure 7-48. The algorithms required for each approach in order to perform a simple addition show that internally a numerical analysis machine is best implemented using a one's complement convention. A digital discussion of binary conventions is available in "Digital Signal Processing" by Rabineer and Gold, McGraw Hill.

7.7 MECHANICAL CONCEPT

Present technology utilizing discrete logic integrated circuits requires approximately 170 chips per functional element of the OEDSF. It is anticipated that exploitation of emerging technologies (such as 64K

CRITERIA	SIGN/MAGNITUDE	ONE'S COMPLEMENT	TWO'S COMPLEMENT
SPEED	POOR	EXCELLENT	MEDIUM
ADD/SUB	DIFFICULTY	EASY	EASY
MULT/DIV	EASY	DIFFICULT	DIFFICULT
UTILIZATION	CONTROL	NUMERICAL ANALYSIS	NUMERICAL ANALYSIS
H/W SIMPLICITY	POOR	EXCELLENT	MEDIUM
ACCURACY AND RESOLUTION	2^b	$2^b/2$	$2^b/4$

Figure 7-47. Comparison of Binary Conventions

• SIGN PLUS MAGNITUDE	• ONE'S COMPLEMENT	• TWO'S COMPLEMENT
- COMPLEMENT B	- COMPLEMENT B	- COMPLEMENT B
- ADD A AND B	- ADD A AND B	- ADD ONE TO B
- STORE SUM	- OUTPUT SUM	- ADD B + 1 TO A
- COMPARE A AND B		- OUTPUT SUM
*IF A > B; OUTPUT SUM		
*IF B > A; COMPLEMENT SUM AND OUTPUT		

ALGORITHMS REQUIRED IN EACH
CONVENTION TO COMPUTE
C = A - B
WHERE A AND B ARE BOTH POSITIVE

Figure 7-48. Properties of Binary Conventions

memory chips) and fabrication techniques will enable each element to be accommodated on a single 9 x 10 inch board and that an entire OEDSF array including its data base and control system will consist of approximately 30 such boards.

This section discusses the packaging and thermal considerations associated with such a system on shuttle. The basic concept allows for up to 3 OEDSF arrays to mechanically and electrically interconnect.

The basic concept assumes an external power supply which is shown in Figure 7-49. A pessimistic concept which assumes a very conservative 70 boards per OEDSF array is depicted in Figure 7-50.

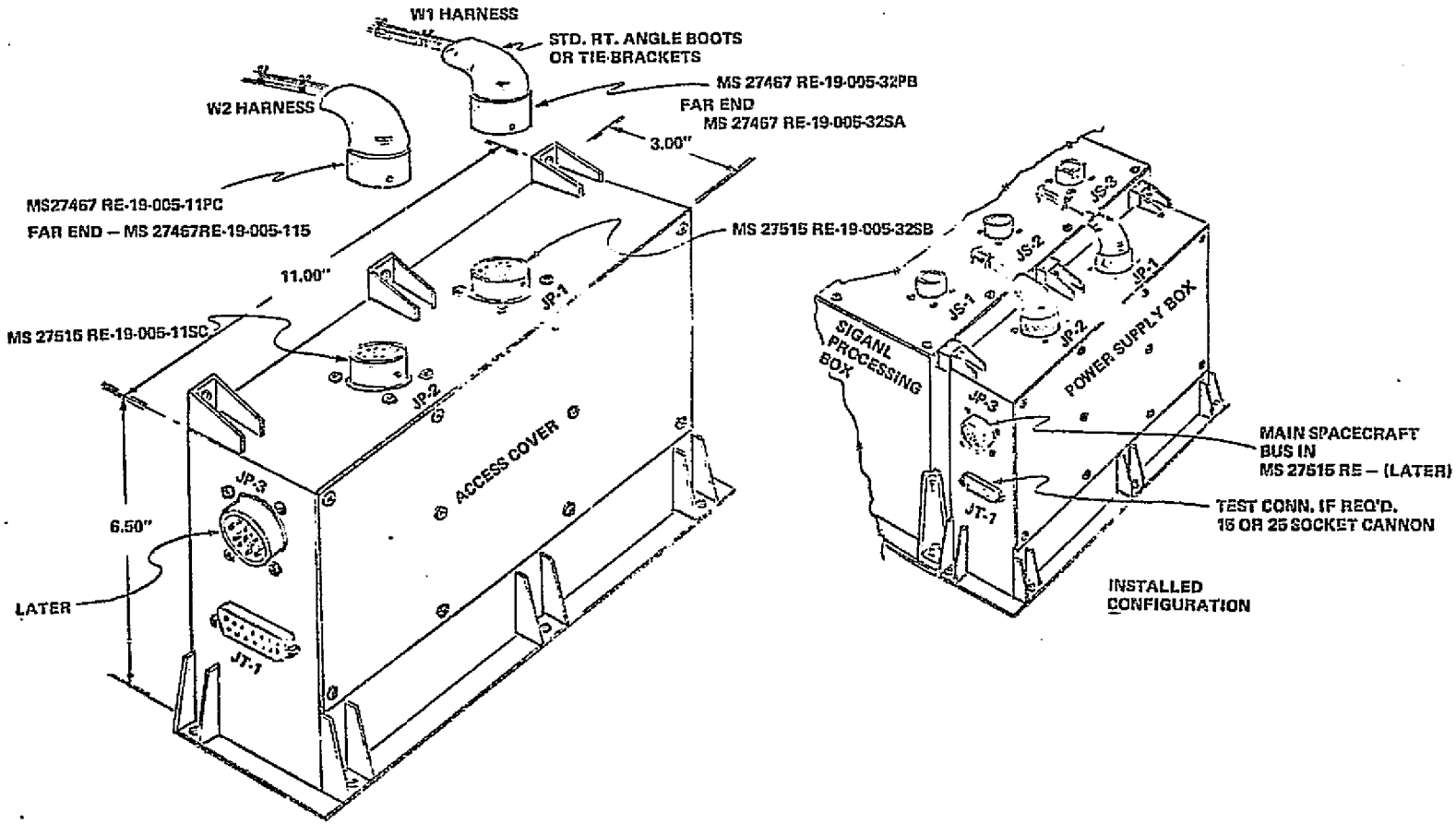

Figure 7-49. OEDSF Power Supply

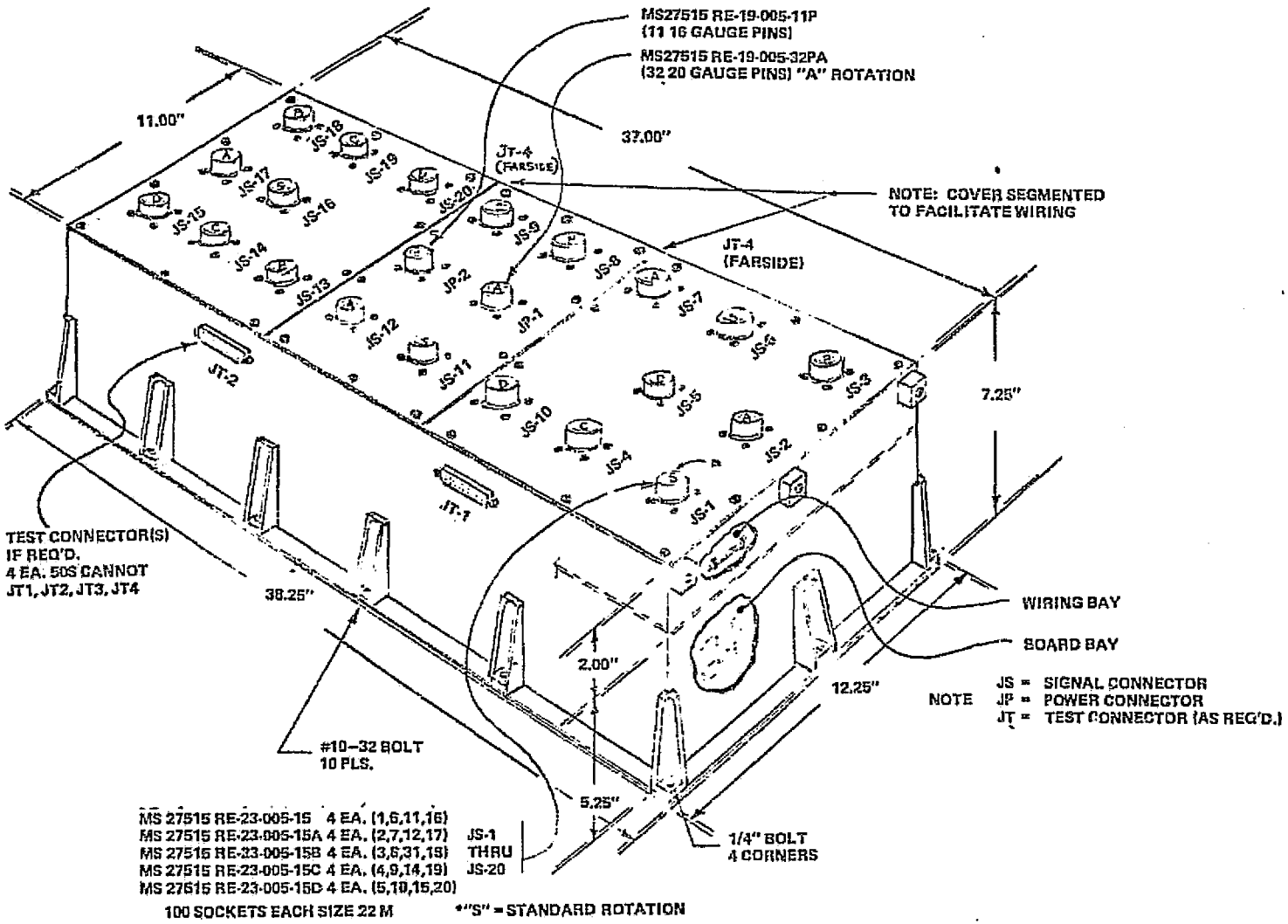

Figure 7-50. Alternate OEDSF Sizing and Configuration

REPRODUCIBILITY OF THE
ORIGINAL PAGE IS POOR

7.7.1 OEDSF PACKAGING CONCEPT

The Onboard Experiment Data Support Facility (OEDSF) Unit may be required to support missions in two areas of space shuttle environments; (a) within the cabin, pressurized area; (b) on the payload pallet, unpressurized area. To accommodate both environments, a circulating gas convection-cooled packaging arrangement was studied and deemed best suited to both conditions. An alternate passive, conductive heat sink module configuration was also studied.

7.7.1.1 Assumptions

Pressurized Mounting. The following assumptions were made: (a) Gas environment around unit in pressurized area would be cool and controlled within nominal operating limits of space shuttle; (b) Acoustic noise level would be within acceptable limits for printed circuit boards; (c) Shock mounting of OEDSF unit would be desirable.

Unpressurized Area. (a) No make up gas supply required – leak rate acceptable for short life mission; (b) Acoustic attenuation would be required around unit; (c) Shock mounting of unit would be required; (d) Radiator viewing to space (not necessarily black space) for gas cooling can be attained.

7.7.1.2 Requirements

OEDSF Unit to be: (a) modular in concept consisting of a multiple of array units to be configured with 30 printed circuit boards, sized for 140 (flat pack) chips per board; (b) Use standard parts where possible; (c) Cooling of circuit board required.

7.7.1.3 General Arrangement

1. Array Unit. Using standard size chips, a circuit board was sized using a multi-layered board with flat pack chips assembled on each side. Circuit board was assembled in a machined aluminum box container with aluminum side plates for accessibility to boards. Boards were mounted in a vertical format using standard birtcher spring clip guide rails. Boards are assembled by sliding along guide rails and engaging electrical connectors mounted on the opposite side plate. These connectors can be cross-wired for inter-board connection or interconnection can be done through printed circuit system on this side panel. Inter array wiring will be accomplished by routing wires to rear face of side panel and terminating in a single row of connectors. (See Figure 7-51). Guide rails are mounted far enough apart to allow slots to be drilled in top and bottom faces of unit for passage of cooling gas flow. Gas will be drawn or blown across circuit board faces by small circulating fans. The proposed system will be by drawing the cooling gas across the circuit board faces (See Figure 7-52).

2. Unit Assembly. Assembled array units are installed into a modular housing consisting of machined aluminum alloy sections that can be assembled into one, two or three unit assemblies by bolting in top and bottom sections to suit number of array units required for mission. An upper plenum will then be installed over completed unit, equipped with circulating fan sized to suit thermal load required to be dissipated. Up to this point units are common to any location or mission requirement.

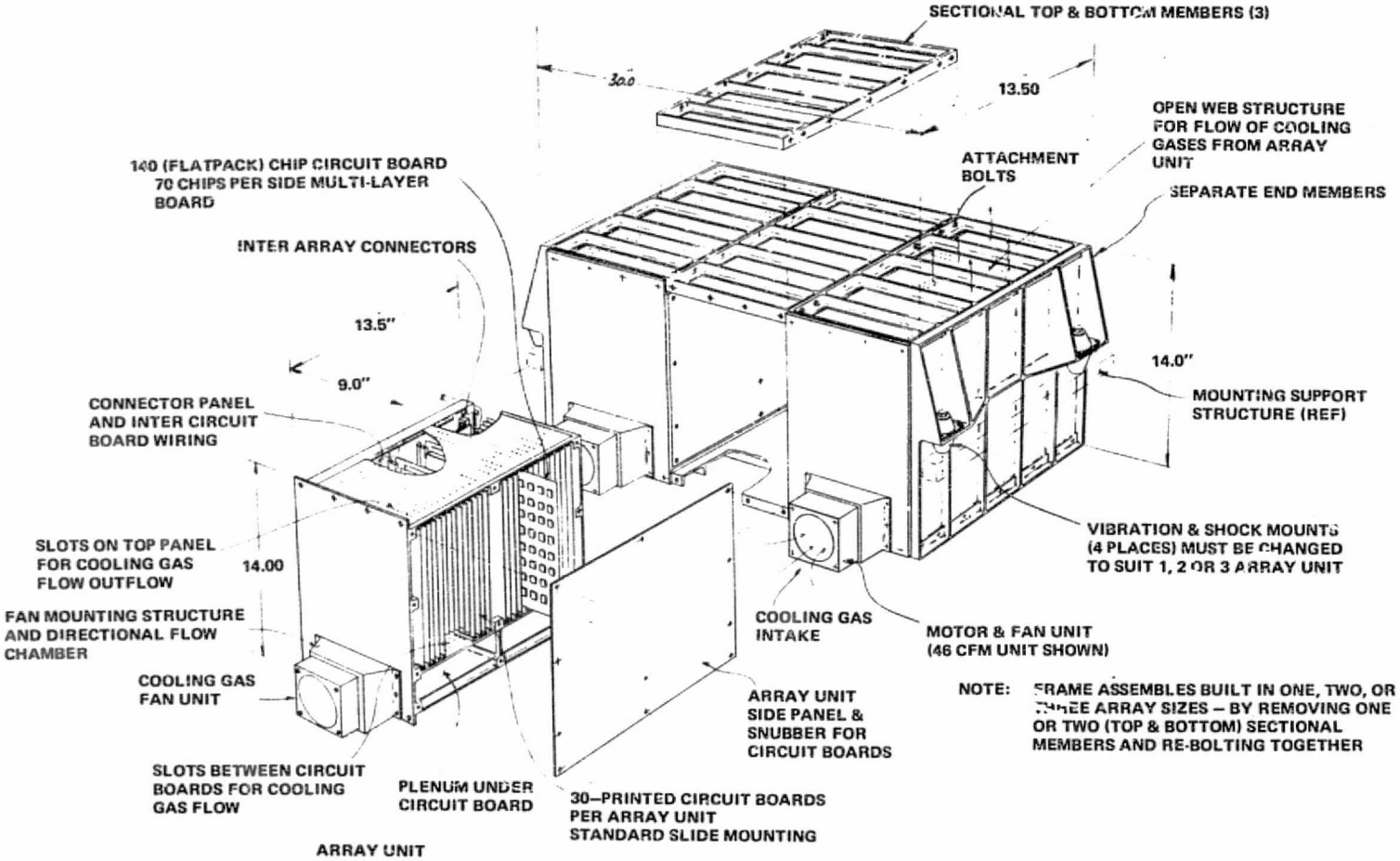

Figure 7-51. OEDSF Packaging Concept

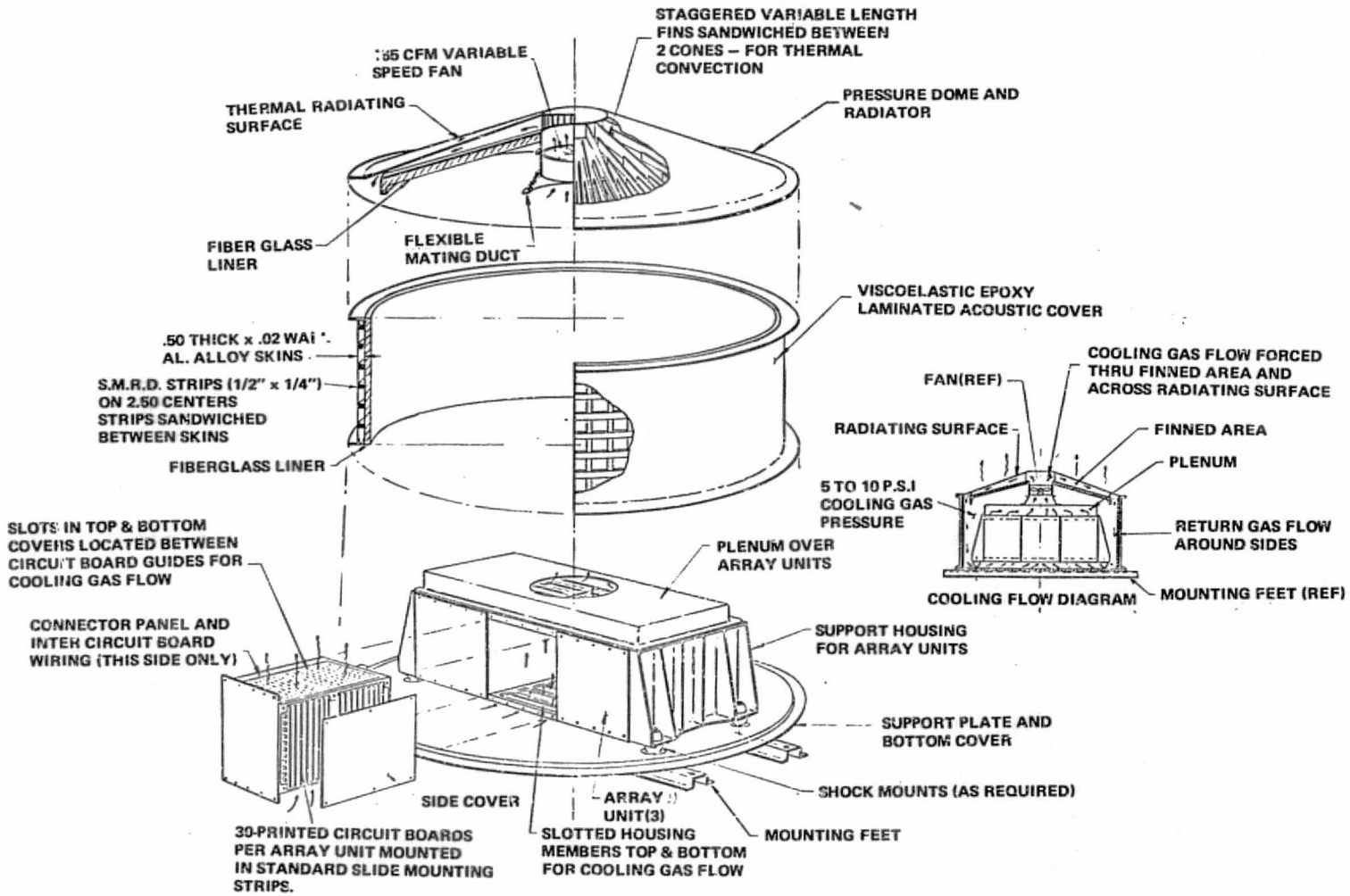

Figure 7-52. Array Unit Cooling

REPRODUCIBILITY OF THE ORIGINAL PAGE IS POOR

3. Installation - Pressurized Area. Where OEDSF units are installed within the pressurized areas of the space shuttle (i.e., cabin area or pallet igloo), a basic support frame structure is required only and units can be bolted thru 4 bolts at the shock mount points to this base structure. Here it was assumed that the pressurized area will be thermally controlled by an overall shuttle system concept and the thermal cooling for the OEDSF units can use this pressurized gas environment for its own convection cooling. The cooling gasses would be drawn in through the lower slots and across the circuit board faces and be blown out through the top to return to pressurized are environment.

4. Installation - Pressurized Area. Where OEDSF units are installed outside the confines of the space shuttle (i.e., pallet area), a special thermal acoustic housing would be required.

   a. External Arrangement. It is proposed that this housing be a pressurized container containing gas for short term missions, approximately seven to fourteen days, where a leak rate of 0.02 pounds/day could be tolerated for a final pressure of 5 pounds/in^2. This leak rate is conservative and easily maintained. For longer missions a make-up pressurized gas bottle could be installed inside the thermal acoustic container housing. The housing is required to provide compatible acoustic and thermal environments for the array units. A basic cylindrical shape is proposed and construction will feature a 1-inch thick viscoelastic epoxy laminated housing. The sizing of the housing will be compatible with internal pressurization requirements of approximately 10 psi.

      The layup of the damping material (SMRD) will be of 1/2 inch wide 1 inch thick strips laid up in a square pattern between the walls of the housing. With this concept, the double wall construction serves as a mechanism for high wall stiffness and also for temperature stabilization. A rough sizing indicates two 30 mil aluminum face sheets are required to provide the necessary stiffness and strength for internal pressurization.

      A thermal blanket of 1/2 inch thick insulative material will be layed up over the inside of the housing for thermal protection. This blanket will also help to absorb the internal acoustic energy, thereby preventing reverberation within the housing. No blanket will be applied over the upper dome of the container as this will be the thermal energy dissipating face. Tests and analysis performed on a three foot viscoelastic epoxy laminated acoustic cover have shown this type of construction to be a highly effective acoustic attenuator. A cover was constructed and tested using two aluminum face sheets with a viscoelastic dissipation for minimizing resonant frequency effects.

      Details of the test are included in the Final Report, Shuttle Payload Acoustic Cover Feasibility Study, GE Document No. 75SD43234, by M. Ferranti and C.V. Stahle, June 23, 1975. This type of construction provided an overall acoustic attenuation of 20 dB with low frequency acoustic attenuation on the order of 30 dB. This attenuation is highly effective for the predicted acoustic environment of the Shuttle payload bay which has its highest levels in the low frequency range.

   b. Internal Arrangement and Assembly. The thermal acoustic housing will be configured with a flat mounting base section, a cylindrical section and a conical domed top section. The OEDSF unit will be mounted to the base section thru 4 bolts attached thru the optional shock mounts or elastomeric dampeners. All external electrical wiring to the unit, except for fan power, will be thru this base section, allowing complete check-out of unit prior to any further assembly of housing.

      The cylindrical section will then be installed over and around the unit and bolted in place with a pressure seal or "O" ring between mating faces. The domed section can then be installed containing the thermally dissipating surfaces and the circulating fan, again with a pressure seal or "O" ring between mating faces. A flexible, compressible duct will interface with the

upper plenum on the OEDSF unit during installation of the domed section. Power to the fan motor will be thru a connector in the domed section, eliminating any electrical connection across this interface during this assembly of the housing. The domed section will be a double skinned cone with variable lengthed radial fins assembled vertically between the conical section to form radial passes thru which the cooling gas will flow. Preliminary thermal analysis has indicated that adequate heat transfer is provided by this design. After the cooling gas has passed thru this section it is left free to return in a random fashion to the under side of the OEDSF unit where it will be drawn back into the unit through the slotted base by the circulating fan.

5. Internal Environment. The gas environment is envisioned as a nitrogen gas atmosphere at a pressure of 10 psi. The nitrogen gas would be circulated by a single fan (more than one fan could be installed if thermal load so indicated). The gas would be convectively and radiantly cooled as it flowed past and thru the top conically finned annulus section of the housing. See Section 7.7.2 for preliminary thermal analysis.

7.7.1.4 Alternate Arrangements

An alternate configuration study was conducted using a passive thermal path for conductive cooling of the OEDSF unit. This method would require a known and controlled heat sink base plate for mounting of the unit. See Figure 7-53.

The temperature limits would be less controlled, but could contain the temperature of the upper limit on the circuit board chips to the maximum operating limit of 130F.

Thermal heat sink strips would be required on the circuit boards. (Standard systems are available and in common practice). Good thermal ties would be required between array units and the basic support section. This would require attachments at both front and back of the array unit necessitating more attachment fasteners. Slightly heavier end wall sections would be required to conduct heat to the mounting faces of the completed unit.

The unit would be hard mounted to the base heat sink structure of the space shuttle, with thermally conductive grease between mating faces. Hard mounting of the unit would subject the circuit boards to the full space shuttle vibration environment. An acoustic cover or housing would be required over the installed unit. This housing could be a viscoelastic epoxy laminated housing similar in construction to the pressurized container.

Figures 7-49 and 7-50 depict a larger physical configuration as noted in Paragraph 7.7.

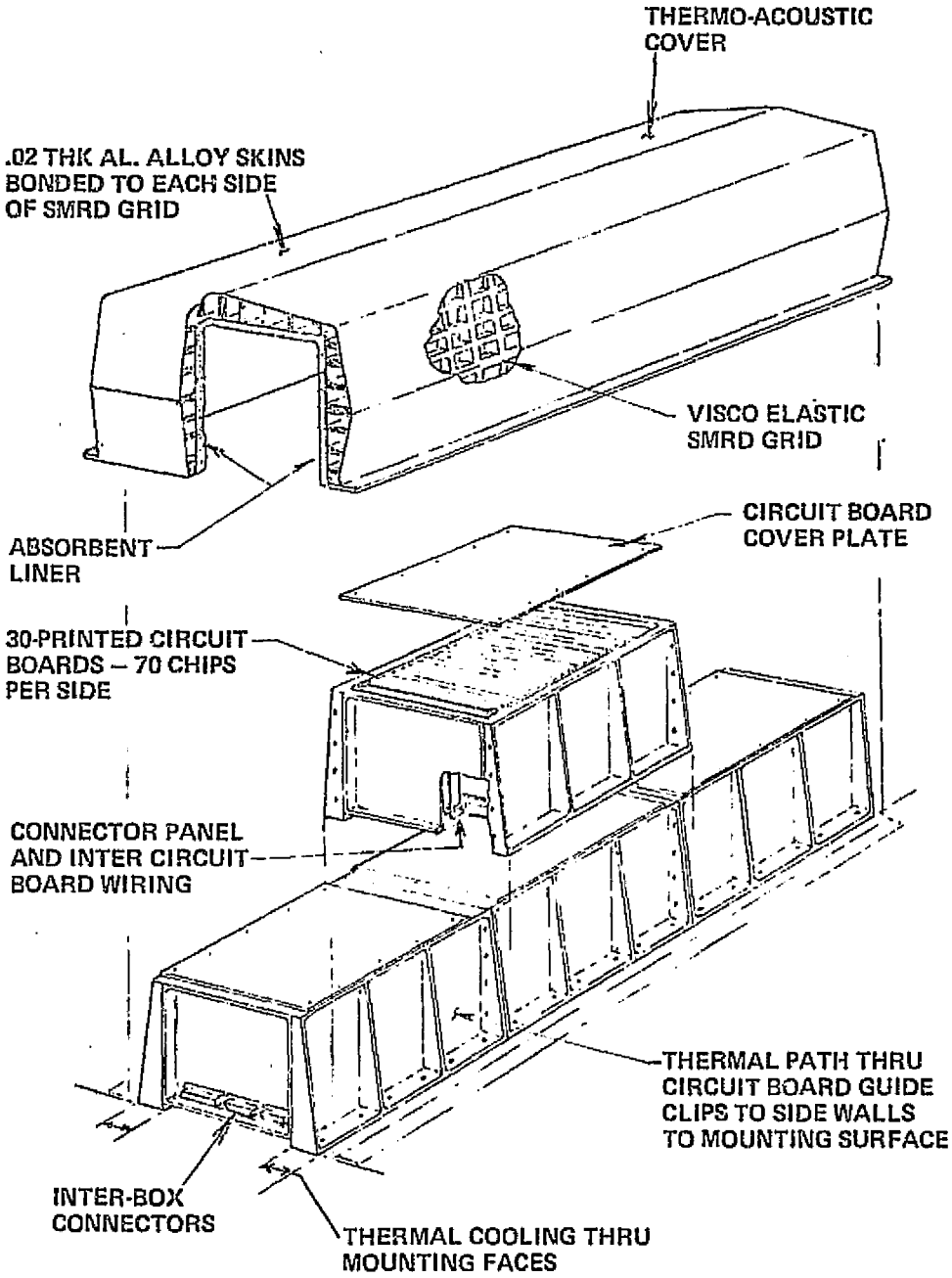

Figure 7-53. Alternate Arrangement

7.7.2 PRELIMINARY THERMAL ANALYSIS

7.7.2.1 Constraints

Requirements. The thermal control requirements are shown in Table 7-5.

Table 7-5. OEDSF Thermal Requirements

Heat Dissipation	
- Per Card	3W - 5W
- Per Unit	90 - 150W
Temperature, Card Surface	70° C max 0° C min

Environments. The environments of OEDSF are shown in Table 7-6 for both conduction and convection designs.

Table 7-6. OEDSF Environments

		Hot	Cold
Conduction Design		50° C*	-3° C*
Convection			
- Pallet Mount	Solar	1353 W/M^2	0
	Earth	66 W/M^2	0
	Albedo	72.72 W/M^2	0
- Pressurized Module		26° C	18° C

*Assumes the Auxiliary Payload Power System (APPS) as source of coolant.

7.7.2.2 Gas Cooled Configuration

1. Pallet Mount. Gas cooling of the circuit boards in a pallet mounted configuration will require the circulated gas to absorb the heat from the cards by convection and transport the heated gas to the conical cover. Fins extending down from the cover will increase the surface area for convection. The external surface area will be coated with Silver/Teflon with an $\epsilon = 0.80$. The area of the cover is adequate to reject the heat dissipated by the OEDSF in the hot case. Cold case control is obtained by reducing the fan speed.

   The fan will supply 46 cfm of gaseous nitrogen at rated speed (~141 lb/hr.). This will result in a gas temperature rise of 10° C in the OEDSF (and in the radiator/heat exchanger. For a radiator area of 0.785 m^2 the maximum radiator average temperature will be ~ 37° C and the gas temperature leaving the radiator will be ~47.5° C and the maximum card temperature will be 50° C.

Under cold case conditions the temperature of the gas leaving the radiator/heat exchanger will be limited to 0° C by reducing the fan speed.

2. Pressurized Module. The cooling arrangement for this configuration will be essentially the same as for the pallet except that the coolant gas will be drawn from and returned to the pressurized module volume.

7.7.2.3 Conduction Cooled Configuration

The constraints applied to this configuration are shown on Table 7-6. It will be noted that the maximum sink temperature for conduction to a cold plate is 50° C. This temperature assumed that APPS will be the source of coolant to the cold plate. This yields a maximum temperature difference (Δt) to the circuit board of 20° C. A Δt of 17° C can be expected between the cold plate and the surface of the circuit board in contact with the Birtcher clips. This leaves only 3° C for conduction in the board which is not considered acceptable. The 17° C is achieved by using 2024 aluminum for the sidewalls, 0.2" thick (Δt = 13.0° C) and a 0.5" width flange at the cold plate (Δt = 2.8° C). It is further assumed that the bolt spacing will be $\leq$ 2" and the joint filled with thermal grease.

If the cold plate can be tied to the Experiment Heat Exchanger in the pressurized module the maximum temperature can be reduced to $\leq$40° C, yielding an increase of 10° C in the circuit board Δt to 12.5° C. This is considered to be less than marginal. A Δt of 20° C would be considered a minimum, requiring a cold plate temperature of $\leq$30° C maximum.

SECTION 8

INDEX GENERATING PROGRAM

The OEDSF can be programmed manually. As exemplified in Section 6, this is an easy task in the case of a single sensor. When many sensors are competing for the use of the OEDSF's elements, the scheduling of these elements becomes a tedious task which is ideally suited for computers.

The OEDSF concept envisions a computer program, the Index Generating Program (IGP) which generates, off line, the microcode required to control the OEDSF in a cost-and schedule-effective manner.

This program resides in a TBD host computer of the PDP 11/70 class. It accepts the processing requirements of the complement of instruments comprising a given payload in a user oriented language and produces the microcode directly usable by the OEDSF controller.

The program has been conceived as a modular, growth oriented system depicted in Figure 8-1.

The Assembler and the Simulator are the essential components of the software system.

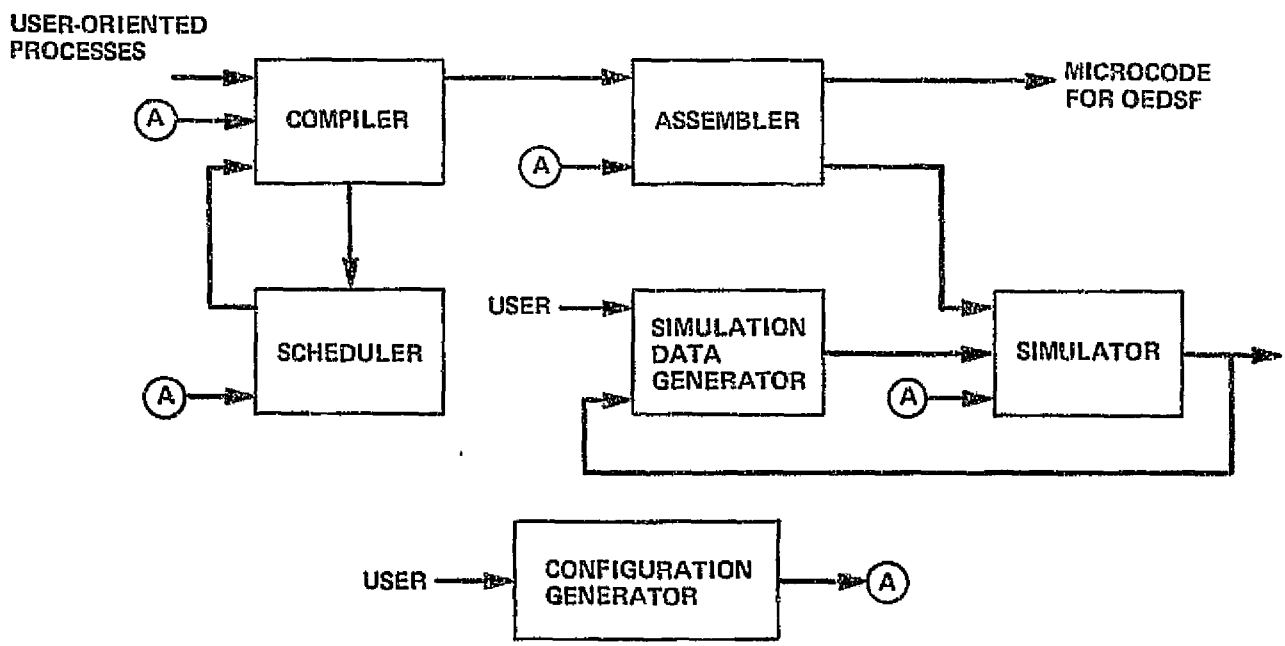

Figure 8-1. Index Generation Program Overview

The Assembler accepts the processing functions in assembly language format and generates the microcode directly useable by the OEDSF. The simulator applies this microcode to a simulated OEDSF and indicates conflicts and illegal operations. It also provides a step by step analysis of the OEDSF operation. The configuration generator allows changes in the make up of the OEDSF and provides this information to all the elements of the IGP. Configuration changes include size of the array; i.e., 5 x 5, the type of elements, and the location of these elements in the array.

The Simulation Data Generator produces simulated data for input to the Simulator. It also accepts data output from the Simulator for simulated recirculated data.

The Compiler enables the inputs to be formatted in a user-oriented language specifically tailored for data processing.

The Scheduler is the heart of the IGP which reduces the programming of the OEDSF to a trivial task. The data processes required for each sensor are entered serially. The scheduler assigns OEDSF elements to each process as a function of the resources allocated to this module; i.e., the scheduler represents an area of significant growth potential. It is anticipated that well over 90% of the schedule conflicts will be resolved by timing schedules; i.e., utilizing the vast discrepancy between the OEDSF rate and that of the sensors to hold (suspend) a required process for one or more cycles of the array's operation until the conflict disappears. Other conflicts resolving techniques include: identity recognition, i.e., AB = BA and rerouting.

Figure 8-2 depicts the overall IGP concept. Figure 8-3 details the key segments of the IGP.

IGP Overview. Binary, memory-image, executable code for the OEDSF processor array is generated in the OASYMA module. This software module is a relatively conventional symbolic assembler with a quasi-macro assembler capability. The primary unconventional aspects are that the word size of the executable code is over 1000 bits, and that time (not duration) of execution is an essential part of the source language syntax.

OASYMA accepts source language statements, each statement representing an ELEMENT INSTRUCTION and DATA WORD (EIW and EDW), from either of two sources. The user may provide these statements directly in the assembler language, SPL or Sensor Process Language. In the latter case a translator or compiler module is required to convert SPL statements into OEDSF Assembler language. For simple, single-thread processes a relatively straightforward compiler module is specified, the OASPLC module.

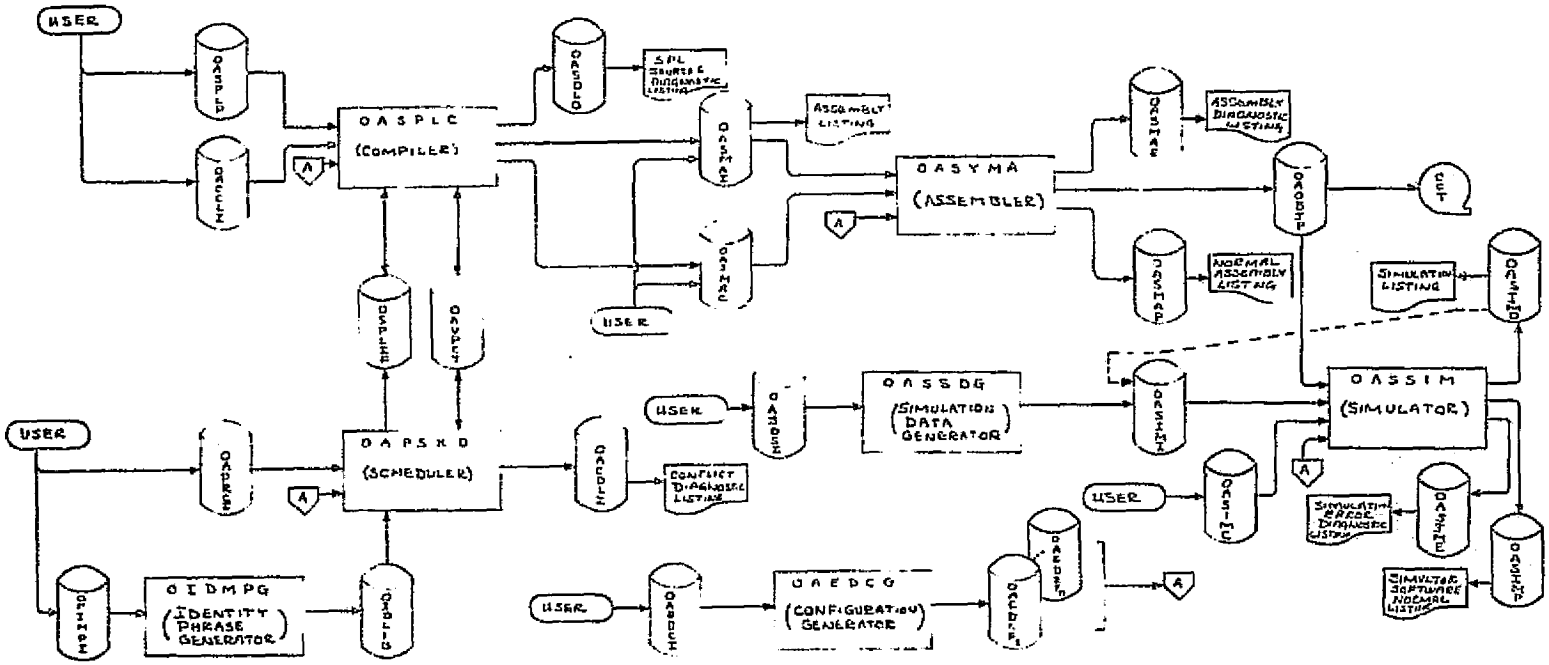

Figure 8-2. OEDSF Software System Flow

REPRODUCIBILITY OF THE ORIGINAL PAGE IS POOR

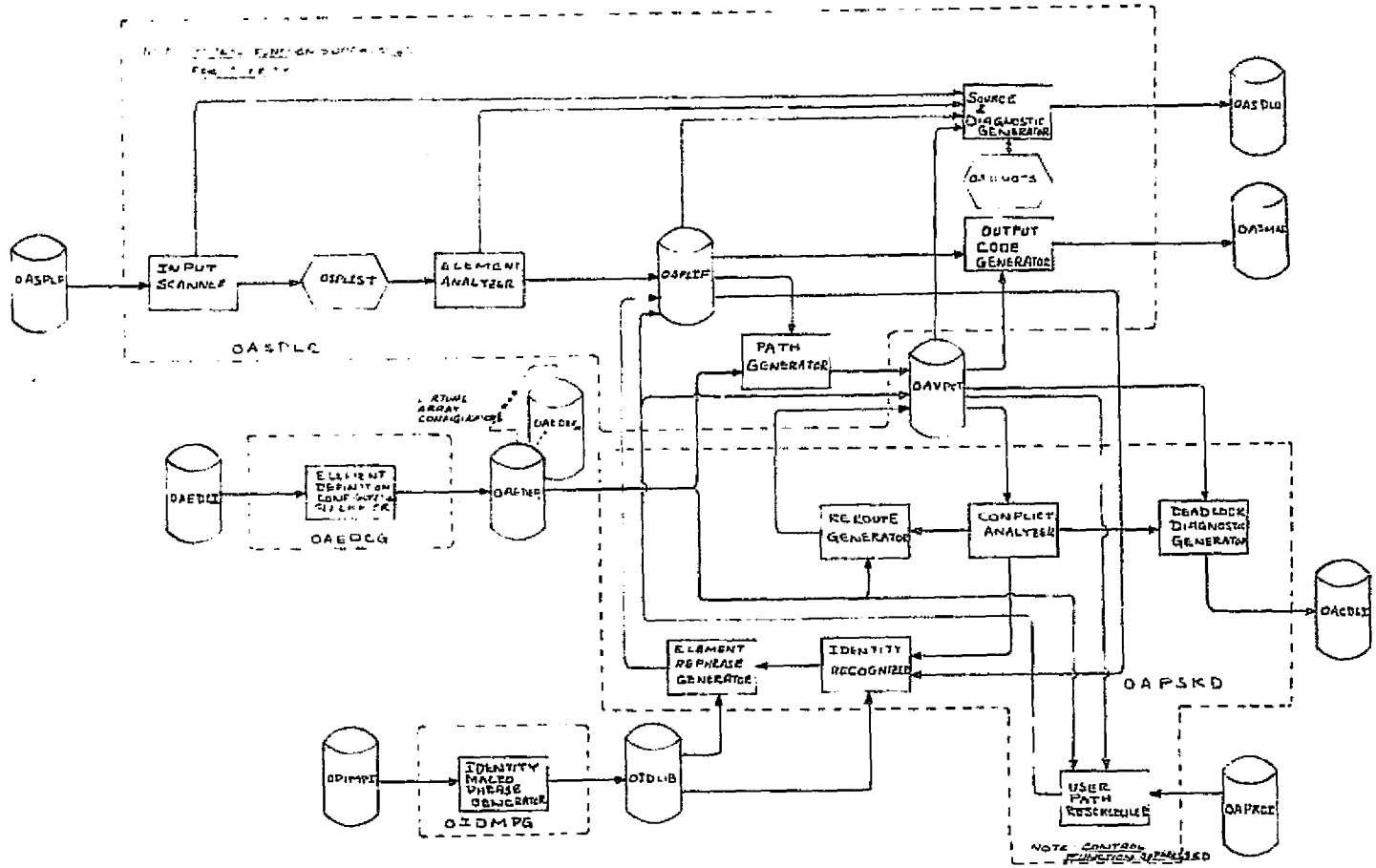

Figure 8-3. Sensor Process Language Compiler and Scheduler Software System

REPRODUCIBILITY OF THE ORIGINAL PAGE IS POOR

For complex or multi-thread processes, another compiler module (OAPSKD) is required to resolve conflicts in multi-thread processes. This module is absolutely the most complex in the entire software system. It must detect conflicts in the 2-dimensional OEDSF processor array surface and attempt to re-thread (schedule) the data flow in three dimensions, now including time, to resolve the conflict. Because of the similarity of this process to the "optimizing" stages of many current high-level language (FORTRAN) compilers, there is a tendency to view this as a "data-flow optimizing" stage to the OASPLC compiler module. This is not the case. Instead, the OAPSKD merely detects and attempts, heuristically, to resolve conflicts in TIME and SPACE for processor ELEMENTS. There are no optimization criteria and the first feasible solution will be accepted. There is no guarantee that any given conflict can or will be resolved. It will be a ripe area for future research to devise better and more efficient conflict resolution algorithms. The OAPSKD module must be recognized as an open-ended, evolving software effort. The OAPSKD module and overall OEDSF software system (OS^2) must provide for growth, flexibility and continuing change in the conflict resolution software.

The executable code produced by the OASYMA assembler may be loaded into the OEDSF processor or validated using a software simulator of the OEDSF processor array (OASSIM). This simulator will perform a "slow-time" bit emulation of the processor array behavior during execution of the program generated by the OASYMA assembler. OASSIM may also be used during the hardware design stage to gain confidence in the performance and correctness of each processor ELEMENT. The user will usually, however, use the simulator output to refine assembler or Sensor Process Language programs.

Three other utility-type software modules are required to round out the OS^2. All three simply aid the user in interfacing with the previous four main software modules.

OAEDCG allows the user to define the hardware configuration of the OEDSF array being programmed. Essentially, this is a high-level language interpreter which accepts descriptions of the processor ELEMENTS at each node and their connectivity characteristics to other nodes.

OASSDG provides the user a way to define the simulated external environment (data flows) for the OASSIM software simulator to process when emulating the OEDSF processor array.

OIDMPG allows the user to define "Identities" which the OAPSKD may invoke when attempting to resolve space and time conflicts for processor ELEMENTS.

Software System Definition. The OEDSF software system (OS^2) consists of (TBD) OEDSF software subsystem (OS^3) modules. Each OS^3 module is a stand-alone computer program executing upon a (TBD) computer and performs one of the modular functions required to support checkout, software development, and operation of the OEDSF computer system.

The OS^3 modules are listed below and are defined in more functional detail in the following paragraphs.

OS^3 Module Mnemonic	OS^3 Module Name
OASSIM	OEDSF Array Software Simulator.
OASYMA	OEDSF Array Symbolic Assembler.
OASPLC	OEDSF Array Sensor Process Language Compiler.
OASSDG	OEDSF Array Simulator Sensor Data Generator.
OIDMPG	OEDSF Identity Macro Phrase Generator.
OAP SKD	OEDSF Array Path Scheduler.
OAEDCG	OEDSF Array Element Definition Configuration Generator.

The OS^3 modules are interfaced by a series of files. These files are listed below and are defined in more functional detail in the indicated text reference sections.

OS^3 File Mnemonic	OS^3 File Name
OAEDEF	OEDSF Array Element Definition.
OAOBJP	OEDSF Array Object Program.
OASIMI	OEDSF Array Software Simulator Simulated Input.
OASIMC	OEDSF Array Software Simulator Run Control Input.
OASIME	OEDSF Array Software Simulator Error Mossages.
OASIMP	OEDSF Array Software Simulator Normal Printout.
OASIMO	OEDSF Array Software Simulator Simulated Output.
OASMAC	OEDSF Array Symbolic Assembler Run Control Input.
OASMAI	OEDSF Array Symbolic Assembler Source Language Input.
OASMAE	OEDSF Array Symbolic Assembler Error Messages.
OASMAP	OEDSF Array Assembler Normal Printout.
OASPLP	OEDSF Array Sensor Process Language Program.
OAEDCI	OEDSF Array Element Definition Configuration Input.
OPIMPI	OEDSF Procedure Identity Macro-Phrase Input.
OIDLIB	OEDSF Identity Definition Library

OS^3 File Mnemonic	OS^3 File Name
OSPLIF	OEDSF Sensor Process Language Internal Form
OAVPCT	OEDSF Array Virtual Path Connectivity Table
OASDLO	OEDSF Array Source & Diagnostic Listing Output
OAPRCI	OEDSF Path Reschedule Control Input
OACDLO	OEDSF Conflict Diagnostic Listing Output
OASDSI	OEDSF Array Sensor Data Source Input
OACCLI	OEDSF Array Compiler Control Language Input

TERMINOLOGY. The terminology used throughout this report follows generally accepted standards for computer systems engineering. In addition, the following project-unique terms are defined below:

ELEMENT - smallest modular processor unit, corresponds to arithmetic, trig or exponential function generator.

ARRAY - rectangular, 2-dimensional matrix of processor ELEMENTS. Current thinking places this at a 5 x 5 symmetrical structure.

NETWORK - irregular, 2-dimensional surface of ARRAYS with arbitrary data output to input connectivity.

CYCLE TIME - time required for one ELEMENT to accept, execute, and prepare to accept another ELEMENT INSTRUCTION WORD (EIW). Current thinking places this at .25 microseconds.

ELEMENT INSTRUCTION WORD (EIW) - configuration of bits encoded into a digital word which directs the execution of a processor ELEMENT during one CYCLE TIME. Current thinking places this word size at 16 bits.

ARRAY INSTRUCTION WORD (AIW) - configuration of bits encoded into a digital word which directs the execution of a processor ARRAY during one CYCLE TIME. Current thinking places this word size at 400 bits. (5 x 5 x 16)

ELEMENT DATA WORD (EDW) - configuration of bits representing numeric information required by one processor ELEMENT during one CYCLE TIME. Current thinking places this word size at 38 bits, (2, 16-bit numbers plus 6 bits of addressing information to define location within processor ELEMENT scratch pad memory to serve as data destination). NOTE. This definition assumes that 1 or more EIW's, and thereby 1 or more cycle times, will be required to load an arithmetic function processor ELEMENT scratch pad memory with its required data prior to execution of the associated arithmetic EIW.

ARRAY DATA WORD (ADW) - configuration of bits encoded into a digital word which provides numeric data values to the ARRAY during one cycle time. Current thinking places this word size at 646 bits (17 x 38).

OASYMA, OEDSF ARRAY SYMBOLIC ASSEMBLER. The OASYMA symbolic assembler software sybsystem module permits the user to conveniently specify the functional process to be performed by each processor element with time. Essential elements of user convenience are:

1. ARRAY nodes may be referenced symbolically by name instead of index number pair;
2. Processor ELEMENT definition taken from OAEDEF file instead of user input;
3. All processor ELEMENT functions are initially defined as NO-OP (null Operation) and need not be referenced by user unless an explicit function is required;
4. Once a user specifies or implies a processor ELEMENT function, that ELEMENT continues that function until the user explicitly specifies a new function;
5. Numeric constant data information may be specified in binary, octal, hexadecimal or decimal notation;
6. Repeating sequences of functions for a given processor ELEMENT may be specified without repetitive input.

INPUT - Input to OASYMA is three data files. One file (OAEDEF) defines the topological layout of processor ELEMENTS within the ARRAY. A second data file (OASMAI) contains the symbolic assembly language source statements which are to be translated into ARRAY INSTRUCTION AND DATA WORDS (AIW's, ADW's). These statements will be of the form:

@<time><node ID><operation code>< node ID or numeric data > < . . . >

The third file (OASMAC) contains run control commands for the OASYMA program.

OUTPUT - Output from OASYMA is three data files. The first file (OAOBJP) is the ARRAY object program or ordered set of AIW's and ADW's in format suitable for loading into the OEDSF ARRAY and the OASSIM software simulator module. The two other files (OASMAP and OASMAE) are print-out oriented files to provide normal program listings of source statements and object code, and run-time error messages respectively.

PROCESSING - The OASYMA module serves to translate user instructions to the OEDSF ARRAY into machine language AIW's and ADW's. The particular configuration of processor ELEMENTS in the ARRAY is provided from the OAEDEF file. OASYMA will have a catalog of operation codes and AIW

formats for each type of ELEMENT. The OAEDEF file then defines which type of ELEMENT is at each of the ARRAY nodes for any given configuration.

Processing of the source language statement is initiated by first initializing the state of all processor elements to NO-OP and then reading each source statement and immediately translating to ELEMENT INSTRUCTION and DATA WORDS (EIW's and EDW's). In general, a new source statement can be made at each time step for each ELEMENT. Actually, before reading new source statements for a new time step, all AIW's and ADW's are initialized to the corresponding AIW's and ADW's of the previous time step (or NO-OP if the first). Thus, if a processor ELEMENT is to maintain the same function role for several time steps, only the initial specification is made, the same function will then continue until explicitly changed. When reading and translating source language statements of the form:

@<time><node ID><operation code>< node ID or numeric data >< ··· >

The statement analysis algorithm can be summarized as follows:

@ := statement delimiter (required).

<time> := numeric quantity following @ signifies new time step. If greater than previous time step by two or more units, generate object code for all interim time steps identically to most recently generated AIW and ADW. Initialize next AIW and ADW equal to most recent AIW and ADW (optional, if omitted, same time step value as previous statement).

<node ID>:= symbolic name or index pair of form (i, j) where i and j are unsigned, non-zero integers. Specifies ARRAY node for following operation codes and arguments. (required)

<operation code> := symbolic or operation code for operation to be performed by the processor ELEMENT at the previously specified node at the specified time. (required).

< node ID or numeric data > := symbolic name, or index pair of form (i.j) where i and j are unsigned non-zero integers, or a numeric constant which specifies an argument for the previously specified operation. Every operation code has zero, one, or more such arguments required. Number of arguments provided in type and order (sequence) with that required by operation code. If node ID (symbolic name or index pair), argument is to be obtained from data flow from specified node. If numeric data, specifies a numeric value to be made available at the scratch pad memory. Binary, octal, decimal or hexadecimal data may be specified by a character string from the appropriate character set followed by (2), (8), (10) or (16) respectively. If no (k) notation follows, decimal data (10) is assumed. Twos-complement negative numbers may be specified by inclusion of a leading minus sign (-). All numbers are integers. Scaling appropriate to the data and operation code must be performed by user. (optional)

<···> := repetition of < node ID or numeric data > field as many times as required for the operation code. All characters and fields after last required argument are ignored and are treated as comments until the statement delimiter @ is encountered. (optional).

All fields within statement must be separated by a comma or one or more spaces.

A special form of the above statement is used to specify repeated sequences of statement. The statement form is the same but the time field is numerically less than the current time step value. This is interpreted to direct the assembler to previously created AIW's and ADW's.

OASSIM, OEDSF ARRAY SOFTWARE SIMULATION. The OASSIM is a program which simulates the execution of a single OEDSF ARRAY and provides the user with a detailed description of the internal operations and data flow with time among the functional processor ELEMENTS.

INPUT - Input to OASSIM is four data files. One file (OAEDEF) defines the topological layout of processor ELEMENTS within the ARRAY, the second file (OAOBJP) defines the object "program" or ordered set of ARRAY INSTRUCTION WORDS (AIW's), and the third file (OASIMI) is a time-ordered set of numerical data representing the values of signal inputs to the ARRAY. A fourth file (OASIMC) contains run control commands for the OASSIM program.

OUTPUT - Output from OASSIM is three data files. One file (OASIMO) is a file of numerical data representing the simulated numerical output of the ARRAY. This file will be of the same time-ordered format as the input file (OASIMI) so that a NETWORK can be simulated by using simulated output as simulated input to another ARRAY. Two other files (OASIMP and OASIME) are print-out oriented files to provide normal step-by-step insight into array operation and run-time error messages, respectively.

PROCESSING - The OASSIM module serves as an operations simulator and non-real-time emulator of the OEDSF ARRAY. The particular configuration of the ARRAY to be simulated is provided from the OAEDEF file. OASSIM will have a variety of sub-modules simulating each possible type of ARRAY ELEMENT. The OAEDEF file defines which type of ELEMENT is at each of the ARRAY nodes for any given configuration. Knowing the ELEMENT type at each node also defines internal data flow paths. External data flow paths are simulated by two other data files. The OASIMI file will contain binary data representing simulated digital inputs which are to be used as the simulated ARRAY "inputs". The resulting simulated ARRAY data "outputs" are written to the OASIMO data files. The OASIMI and OASIMO data files are time-sequentially organized and are of identical format so that the "outputs" can be used as "inputs" to another simulation run.

In addition to the emulation-type numeric output, the OASSIM module provides two sets of printer-formatted outputs. The data file OASIME is used for printout of all anomaly or error conditions encountered or detected during an execution of the OASSIM module. Typical of these outputs might be an error message that a magnetic tape had been "filled-up" with simulated output data or that an ARRAY

ELEMENT had been referenced without having previously been defined in the ARRAY ELEMENT Definition file OAEDEF.

Another printer-formatted output file is the normal execution report file. By means of run control data contained in file OASIMC, the OASSIM module may produce a little or a lot of output data. In the extremes, the minimum output would be messages reflecting the start and stop-simulation events, and the maximum would be a time-ordered list of internal and external data values for every processor ELEMENT in an ARRAY. In all cases this output is directed to the OASIMP data file for possible print-out.

The simulation user exercises control over the execution of the OASSIM module by the contents of the OASIMC data file. Typically, the user will set up the length of simulated time and various printout options by the contents of this file.

Once execution of OASSIM is initiated, the OASSIM module will simulate the action of every processor ELEMENT at every machine cycle. Since the OEDSF array is totally synchronous above the processor ELEMENT level, the operation of each processor ELEMENT is totally a function of the Array Control Word (ACW), the Array Data Word (ADW), and the data inputs from the external data sources and/or other processor ELEMENTS previous cycles' output. No iterative looping is required to simulate asynchronous data flow, and ELEMENT simulation submodules are called only once for each ARRAY node.

Figure 8-4 shows the high level flow of the OASSIM module. The OASSIM module will be coded in FORTRAN in basically machine-independent manner. All machine-dependent functions will be coded in separate replaceable subroutines or function and clearly documented as to their internal operation as well as interface characteristics.

OASPLC, OEDSF ARRAY SENSOR PROCESS LANGUAGE COMPILER. The OEDSF Array Sensor Process Language Compiler converts Sensor Process Language (SPL) programs consisting of user level sensor processing procedures to symbolic OASYMA assembler source format. The source language SPL is a high level procedure oriented language which enables the user to specify a single or multi-thread sensor process algorithm without regard to the internal complexity of the OEDSF machine architecture. The compiler itself may be implemented in a high level procedure oriented language, such as PL/1 or fortran or may be implemented using a suitable translator writing system or "compiler-compiler". The target code of the compiler is specified as the OASYMA source code to provide a high degree of flexibility to the users (e.g., several levels of user entry into the programming system is possible). The compiler is capable of producing single thread procedure object code for a single procedure without interaction with the OEDSF Array Path Scheduler (OAPSKD). However, if more than one SPL procedure is specified in the source progrm, the object code

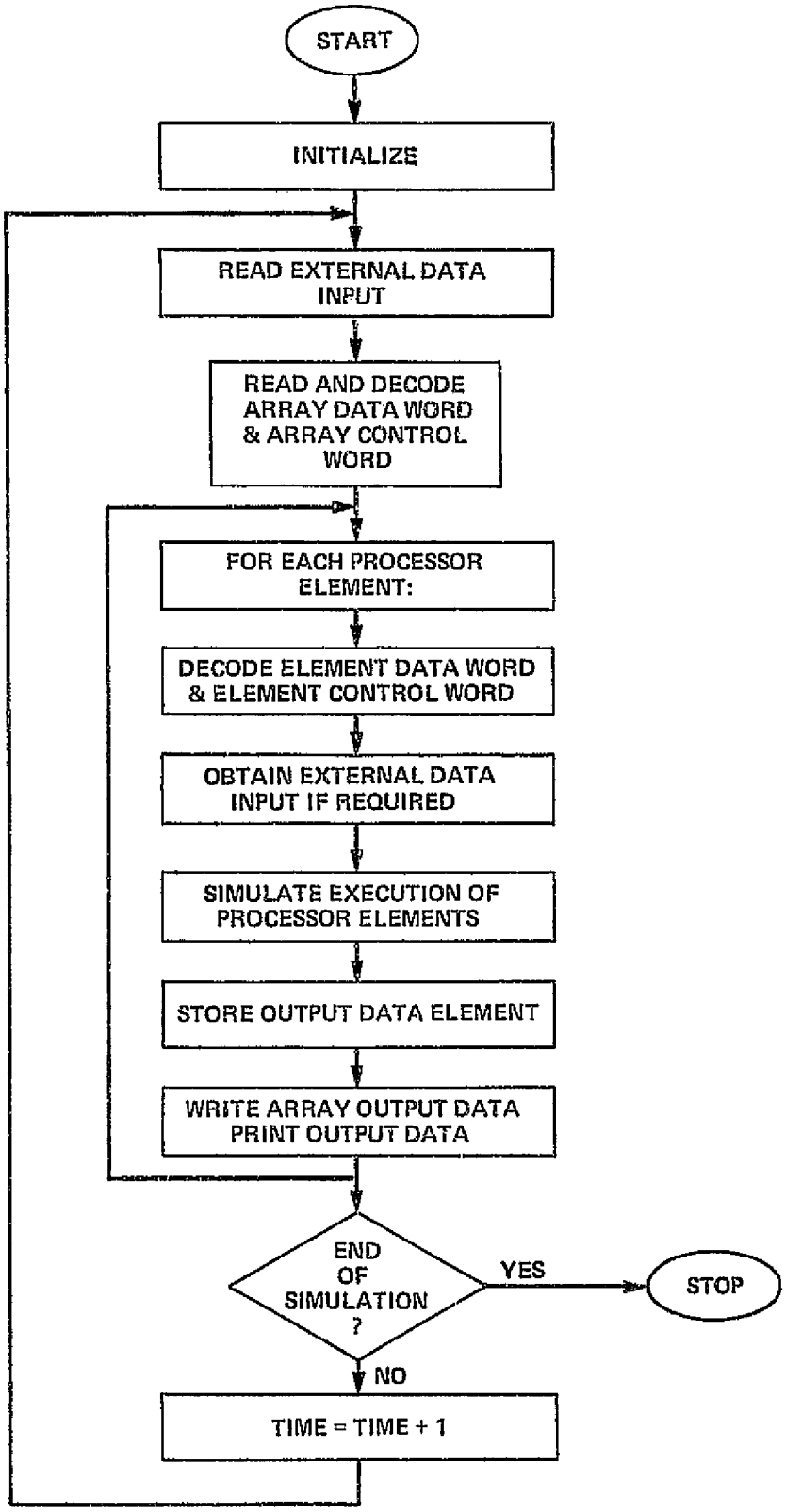

Figure 8-4. OASSIM Module Flow Chart

REPRODUCIBILITY OF TH
ORIGINAL PAGE IS POOR

generation phase of the compilation will be suppressed until an optimized and scheduled multi-procedure program is obtained. The scheduling and optimization functions are provided by OAPSKD module in conjunction with the normal syntax and semantics analysis and code generation functions of the compiler.

INPUT - The OASPLC compiler requires three files as input for the syntax and semantics analysis phase of translation. The OASPLF and OACCLI files contain the Sensor Process Language programs and the compile-time control statements respectively. The third OAEDEF file containing the element configuration information is utilized by the path generation sub-module to generate single thread paths through the array structure. Two additional files are shared between the compiler and the scheduler. The OEDSF sensor process language internal form (OSPLIF) file and the OEDSF Array virtual path connectivity Table (OAVPCT) file is initially built by the compiler and is modified by the scheduler. Both the OSPLIF and OAVPCT files are used as input files for the final phase of compilation.

OUTPUT - The OASPLC output includes five files. The DASDLO is an output file of the source language input and compile-time diagnostic errors. The OASMAI and OASMAC files are the compiler target code file and the OASYMA assemble-time commands. The OSPLIF and OAUPCT files are utilized and updated by the scheduler, prior to the object code generation phase of the compiler.

PROCESSING - The OASPLC performs the translation of SPL procedures into OASYMA assembler source statements.

Each single or multi-thread processing specification and procedure is treated as a stand alone independent process and is compiled independently. The OSPLC compiler consists of the following major translation phases:

- INPUT SCANNER - User SPL source statements are input from OASPLP file as character mode records. These character records are checked for the proper format, syntax, and keywords allowed in the SPL. Comment and blanks are deleted from the internal symbol form. Each symbol in the output string of the Input Scanner is a fixed length, intermediate code format acceptable to the next phase Element Analyzer.

- ELEMENT ANALYZER - The Element Analyzer converts the intermediate code from the input scanner to the internal table form of the program. The Element Analyzer performs a complete syntax and semantic analysis of the internal program prior to generation of the OSPLIF file.

- PATH GENERATOR - The Path Generator processes the information contained in the OSPLIF file and generates single thread paths through the array. The path generator utilizes configuration information contained in the OAEDEF file to allocate array processing elements in the data processing path on a one-to-one basis with the primitive functions defined for each procedure in the OSPLIF file. No attempt is made by the path generator to optimize the scheduling of multiprocedure programs at this level, rather the path generator generates the OAVPCT file for subsequent conflict analysis and path scheduling by the scheduler module.

- SOURCE AND DIAGNOSTIC GENERATOR - The Source and Diagnostic Generator provides the character file output of the input source and compile-time diagnostics from each phase of the compilation. The compiler diagnostic output file (OASDLO) printout and the scheduler diagnostic output file (OACDLI) printout provide the user with in-depth information concerning syntax, semantics and scheduling errors in the SPL source program.

- OUTPUT GENERATOR - The output Generator completes the generation of the object code by translation of the optimized and scheduled internal program and path connectivity table to the required OASYMA source code, which is output to the OASMAI file.

OAPSKD, OEDSF ARRAY PATH SCHEDULER. The OAPSKD Array Path Scheduler performs the overall scheduling of the single or multi-thread sensor processing procedures. Each procedure requires a non-intersecting-processing path through the array (i.e., no two process procedures may intersect the same processing node at the same time). Thus, the scheduler must weave the concurrent procedure paths through the array configuration in such a way that no interference between procedures can occur. The Array Scheduler has access to the array configuration via the OAEDEF file.

Since the array elements are fixed, path conflicts must be resolved by the scheduler before generation of the output OASMAI and OASMAC files by the compiler.

INPUT - The Array Path Scheduler requires four files as input to the scheduling process. The OAVPCT file contains single thread array path connectivity information, which is used in conjunction with the OAEDEF file by the scheduler to weave concurrent multi-sensor processing paths through the array.

As conflicts are resolved by the scheduler the OAVPCT file is updated with new path connectivity information for each single thread path modifed. The OIDLIB file is utilized by the scheduler as a source of algorithm identities which are substituted into the internal form of the SPL procedure. The OAPRCI file contains user schedule control commands which allows the user to directly modify the single-thread procedure paths or to delete procedures from the internal form of the SPL in the event of a scheduling deadlock.

OUTPUT - The OAPSKD produces a single output file and modifies or updates two additional input files. The OACDLI file contains diagnostic information generated during the scheduling process. If a multi-procedure SPL program cannot be scheduled within the virtual configuration of array, the diagnostic deadlock generator sub-module will provide detailed conflict diagnostics which will be used to determine the proper course of corrective action e.g., delete procedures from the SPL or modify the virtual array configuration via the OAEDEF file.

The array scheduler will modify either the OSPLIF file or the OAVPCT depending on the scheduling algorithm used.

PROCESSING - The array path scheduler performs six basic functions consisting of:

- Conflict Analysis
- Path Rerouting
- Identity Recognition
- Procedure Compression or Expansion
- User Path Rescheduling or Procedure Deletion
- Deadlock Diagnostic Generation

If the array path scheduler detects a conflict in the concurrent use of an array node, the scheduler can attempt to reschedule a procedure via an alternate path or can initiate an identity substitution by the Element Rephrase Generator to compress or expand the procedure (i.e., compression or expansion of a procedure will change the length and computation of the sensor processing and thus modify the path of the procedure in such a way as to circumvent the conflicts). After a specified number of unsuccessful attempts to reschedule procedures through the array has occurred the compilation will be aborted with the terminating path diagnostics being output to the OACDLI file for user printout. No object or assemble-time command files will be generated by the compiler as a result of this abortive attempt to schedule multiple procedures. The user may, after examination of the path diagnostics, attempt to reschedule by deletion of one or more procedures or by modification of the virtual array processor configuration via the OAEDEF file. If the OAEDEF file is modified to allow successful compilation of the SPL procedures, the actual array processor configuration must be reconfigured to the virtual configuration before execution of the actual procedures can take place.

OIDMPG, OEDSF IDENTITY MACRO-PHRASE GENERATOR. The OEDSF Identity Macro-Phrase Generator converts identity expressions in SPL equivalent source to the internal (OASPLIF) form utilized by the OASPLC compiler. The identities are organized in a structured file which will be accessed by the array path scheduler.

INPUT - The OIDMGP accepts source inputs from the OPIMPI file. The source file is organized as character mode records.

OUTPUT - The OIDMPG generates a structured identity library file (OIDLIB) containing internal form expressions which are used to compress or expand SPL program procedures by substitution into the OASPLIF file by the scheduler.

PROCESSING - The Identity Macro-Phrase Generator utilizes a macro-expansion capability to generate the required internal form target code. The internal form identities are organized in a structured file format which allows convenient access by the scheduler for identity comparison and recognition and subsequent modification of the compiler OSPLIF file.

OAEDCG, OEDSF ARRAY ELEMENT DEFINITION CONFIGURATION GENERATOR. The OAEDCG Array Element Definition Configuration Generator accepts element definition, array and inter-array connectivity information and generates an optimized information structure file which is used by the array compiler, assembler, scheduler and simulator in performing their specified functions.

INPUT - The OAEDCG module accepts array element and connectivity information via the OAEDCI file.

OUTPUT - The OAEDCG module produces a structured element and virtual array configuration file (OAEDEF) which contains the topological definition of the target array machine.

OASSDG, OEDSF ARRAY SIMULATOR SENSOR DATA GENERATOR. The OASSDG Array Simulator Sensor Data Generator accepts a compact form sensor data specification and generates a time-ordered set of numerical data representing the values of signal inputs to the virtual array.

INPUT - The compact sensor data source is input via the OASDSI file.

OUTPUT - The time-ordered numerical data is output to the OASIMI file.

SECTION 9

EFFECTIVENESS OF THE OEDSF

This section evaluates the consequences of performing the selected processes on-board. The intention of this evaluation is to determine the extent of the improvement of the overall system with respect to cost-effectiveness and timeliness of data availability to the experimenter. Table 9-1 summarizes the results of the evaluation. Section 9.1 discusses the operational advantages of the OEDSF and its benefits which are not directly related to cost, such as timeliness of data availability.

Section 9.2 derives the cost benefits of the OEDSF by comparison with the costs of conventional (all ground) processing approaches.

Section 9.3 trades off various approaches to providing the user with an OEDSF interface during the experiments integration phase.

9.1 OPERATIONAL ADVANTAGES

The OEDSF realizes its benefits by exploiting its unique location in both a spatial and temporal sense. This exploitation is enhanced by the judicious choice of the processes which it performs, and by its architecture.

The specific benefits for each of the sensors are discussed in Sections 4.1 and 4.3 of the OEDSF TASK 2 REPORT. For each of the boundary sensors, the OEDSF produces data or information ready for extractive processing or user modeling. In each case, the processing requirements on the ground are significantly reduced or eliminated.

Temporal Advantages:

The OEDSF operates in real time. The output signals from the experiments are fed to the OEDSF as the experiments generate them. All ancillary data is available to the OEDSF coincident with its generation. Ancillary data is all data used to operate upon or characterize the experiment data. It includes the following:

1. Housekeeping data which provides information on mode, status, and environment. As an example, the RADSCAT processing equations include the antenna housing temperature.

2. Guidance, Navigation, and Control (GNC) data which provides information on all Shuttle locations, attitude, and the rate of change thereof - this data produces the location of observed phenomena, which is a requirement of all experiments.

3. Auxiliary information. This is information which may be produced by other sensors, for example, the IRS data can be used to correct ATS data for atmospheric effects; or it may be the utilization of ambient characteristics; for example, calibrating the ATS by measuring the sun disk.

Table 9-1. OEDSF Evaluation Factors

	DATA IMMEDIATELY AVAILABLE ON (HDDT)	DATA COMPRESSION RATIO	ANCILLARY DATA	GROUND PROCESSING ELIMINATED	GROUND PROCESSING ADDED	CONVENTIONAL APPROACH		COST OF OEDSF SYSTEM $K
						TIME	COST PER MISSION $K	
ATS	CORRECTED DIGITAL IMAGERY WITH LAT AND LON	NONE	ELIMINATED	CALIBRATION RADIOMETRIC AND GEOMETRIC CORRECTION	NONE	6 TIMES REAL TIME	2648	163.9
IRS	RAW TEMPERATURE AND MIXING RATIO PROFILES WITH LAT AND LON PER GRID	16:1	ELIMINATED	CALIBRATION CALCULATION OF TEMP AND MIXING RATIO	FLAG CHECK	1/8 REAL TIME WITH 24 HOURS DELAY	308	18.4
RADSCAT	σ_0 AND T_A WITH LAT AND LON	90:1	ELIMINATED	CALIBRATION CALCULATION OF σ_0 AND T_A	NONE	35 TIMES REAL TIME	577	17.7
CIMATS	SPECIE CONCENTRATION WITH LAT, LON, AND ALTITUDE	20:1	ELIMINATED	ALL	NONE	TBD	432	17.9

If this ancillary data is not utilized in real time, it must be recorded for subsequent processing. The recording process requires a formatting and a time-tag operation of both the sensor data and ancillary data; the subsequent processing requires a correlation operation to "re-match" the ancillary data with the sensor data. Alternately, the ancillary data may be multiplexed with the sensor data so that re-correlation is obviated, but a more complex formatting and reformatting process is required; further, each sensor must duplicate the recording of this common information with a corresponding multiplicative effect on the recording burden.

The real-time feature of the OEDSF provides an adaptive property to the collecting and recording of data. Some examples of the utilization of this property are:

1. Inhibit recording of bad data (such as cloud covered targets, or when SNR is inadequate).

2. Select signals to be processed (or recorded) from multi-signal or multi-channel instruments based on criteria which may be dependent on the scene characteristics or the signal characteristics.

3. Establish or change instrument operating mode based on characteristics of data or ambient conditions.

4. Vary the rate of correction data collection based on the measured rate of change of the error inducing agent.

5. Point instruments.

Processing the data prior to recording or transmission usually effects significant reductions in recorded volume. The ancillary data which need no longer be recorded often exceeds the volume of data produced by the low frequency (up to several kilobits per second) sensors.

As the prime data gets converted to information, its bulk greatly diminishes. For example, the IRS raw data is collected in 12 bit words for each grid point in 17 channels, a total of 17,136 bits for each group of 3 subgrids (28 points per subgrid). The output of the OEDSF is 20 temperature values and 20 mixing ratio values at 7 bits each for each group of 3 subgrids, for a total of 280 bits, a compression ratio greater than 16 to 1.

The most significant aspect of real-time processing is that the data is ready for the experimenter when the shuttle lands. The pre-processing through a central facility with its attendant queue is eliminated.

Spatial Advantages:

The OEDSF derives advantages by virtue of its co-location, in space, with the instruments. One obvious benefit is that processes common to all instruments need be performed only once. If they were performed on the ground, they would be repeated at each experimenter's site, or they would be performed at a central facility with its attendant queue (up to one year on Skylab).

The major benefit lies in the sharing by the instruments of the OEDSF's set of processing functions. The judicious decomposition of the processes required by the various instruments yields a finite and limited set of basic functions which, in various combinations, satisfy the processing requirements of all the sensors. The level of processing capability of each member of this set is sufficiently high that the programming associated with their combination is simple (and inexpensive). The development of such a set for a single experiment would be prohibitively expensive. It becomes highly cost effective, however, when several experiments simultaneously share the same functions. The architecture of the OEDSF (see Section 6) has been configured to maximize the benefits derived from these circumstances.

Benefits as a Function of the User. On-board processing is not equally applicable to all experimenters. We have found many experimenters anxious to exploit the benefits of on-board processing described above, and other experimenters who were strongly opposed to any reduction of their data. The following paragraphs attempt to define the various users and their associated potential as on-board processing beneficiaries.

The users of instrument data can be placed in three categories defined by their utilization of the data. Each category has its own set of problems, needs, and desires.

These three categories are defined as follows:

1. Instrument Developer - Typically is developing an instrument or evaluating the relationship between the energy sensed by the instruments and the phenomenon he is trying to measure. Many sensors on Nimbus missions exemplify instrument developer activities.

2. Application Developer - Works with mature instruments to develop extractive processes which translate data to applicable information. The Landsat series exemplifies his activities.

3. Operational - Routinely uses remotely sensed data as an information input into his decision process. TIROS is an example of an operational system.

These categories can be associated with the processing system shown in Figure 9-1.

The Instrument Developer may want the raw data output by the instrument; in general, he prefers to have it pre-processed to some extent. This extent progresses from formatting to annotation, to calibration, to correction.

The Application Developer wants pre-processed data and, frequently, information extracted to some level which varies depending on the complexity his task and the advances he has made.

The Operational user wants as much processing done as possible. Ideally, he wants the final answer; for example, the quantity of rain which will fall on Philadelphia tomorrow.

The benefits provided by on-board processing to each of these categories are measured by different standards. Instrument Developers derive benefits from on-board processing because there are many experiments flying simultaneously.

On-board processing has the flexibility and capability to serve each of these users and meet their requirements. In general, the various categories of instrument users require greater and greater amounts of data processing as the category changes from Instrument Developer to Operational user.

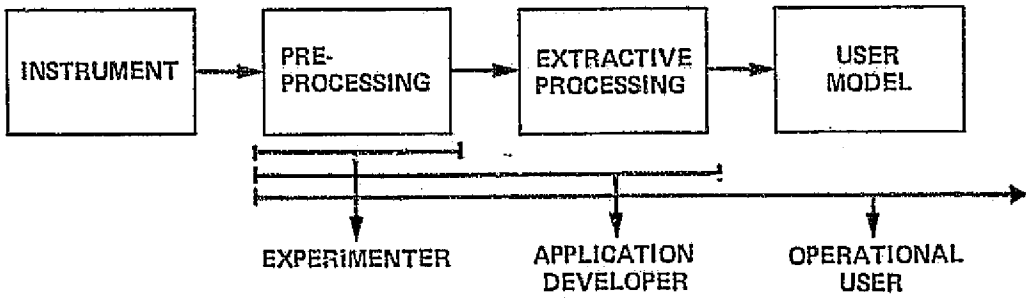

Figure 9-1. Range of Processing Needs

REPRODUCIBILITY OF TH
ORIGINAL PAGE IS POO

The Instrument Developer is primarily interested in the basic electro-optical response of his sensor and therefore can evaluate its performance by assessing the data in its raw or nearly raw form. This raw data, when preprocessed such as by reformatting or the insertion of calibration factors, will enable him to directly determine his instrument's performance. In general, the number of instrument developers is relatively small and their use of the data is often very similar. This situation of a few numbered users, coupled with similar processing requirements, is ideal for the application of standardized processing such as on-board processing. Further, the volumes of data which would be investigated and analyzed in order to evaluate the sensor's performance is generally quite small. A few well-chosen measurements compared with well-instrumented or calibrated test observables will provide the Instrument Developer with sufficient knowledge to determine the performance of his sensor. Often, based on this data, the sensor's characteristics are modified and the instrument is again exercised against the test observations.

The Application Developer is concerned with determining the utility of the remotely sensed data to various Earth Resources or other similar applications. The satisfaction of this need consists primarily of applying and testing various extractive processing techniques and user models. The basic data input to this process is generally well established and almost always preprocessed to a nominal extent. In the area of alternative extractive processing and user model techniques, the Application Developer requires flexibility to exercise different techniques on the data over a relatively wide range of data characteristics. This situation is amenable to on-board processing in two ways. First, the degree of preprocessing is generally well understood and standardized, thus lending itself to a routine preprocessing function; and, second, the various extractive techniques can often be easily implemented at least in a low volume situation with a general purpose on-board processing system.

The Operational user is characterized as a resource manager or other similar application discipline who has a management function to perform and will use remotely sensed data as one of several information sources upon which to base his decisions. In as much as the usage of this data input is well understood and relatively standardized, it lends itself well to consistent and routine processing, both preprocessing and extractive processing and some aspects of the user model. For any particular application, the number of Operational users is relatively small and the processing required of the input data is relative invariable.

Secondary Impacts of the OEDSF. The advent of onboard processing and the method of its implementation creates a new environment which affects some facets of experiment development. Some examples are:

1. The OEDSF is flight equipment. In all space systems built to date the ground equipment comple- has been treated as a poor second to flight equipment in the areas of planning, management, and allocation of resources. This pattern will not change in the foreseeable future. Data processing has suffered from the fact that it has been a ground process. Data processing, when performed on-board, will benefit from the very significant advantages accorded flight equipment.

2. The OEDSF requires an OEDSF programming specialist. Many experimenters' data reduction facilities are programmed by either the experimenter or his assistants. They are experiment oriented rather than processor oriented. The requirement for a specialist insures that the programming will be effected in the most efficient and economical procedure possible.

3. Better disciplined experimenters. The effective utilization of the OEDSF requires that the experimenter fully develop his processing requirements prior to the flight. This forces his attention onto matters which are usually considered secondary creating an attitude which often results in one of two situations: the experimenter omits from his requirements critical ancillary data and thereby renders his experiment worthless, or he requests all the ancillary data he can think of to insure that he will have available whatever he may subsequently need, thereby creating an unwarranted demand on the system.

9.2 COST ANALYSES

The objective of these analyses was to perform a comparison of the cost of the OEDSF end-to-end system versus that of conventional ground systems performing the equivalent OEDSF functions. The methodology used is described below. All costs given are in constant 1976 dollars. The costs of the conventional processing systems for the boundary sensors was determined. These costs include design and development, hardware, and operational. Table 9-2 summarizes these cost comparisons.

The costs for the OEDSF were estimated. These costs include or consider the following components:

- Design and Development and Fabrication of 9 flight units
- Index Generating Program
- Programming of the OEDSF

Table 9-2. Cost Comparison Summary For Two Missions

Sensor	OEDSF Processing Costs (Per Mission) $K	Conventionsl Processing (Per Mission) $K
1. Advanced Technology Scanner (ATS)	163.9	2648
2. Infrared Spectrometer (IRS)	18.4	308
3. Radiometer/Scatterometer (RADSCAT)	17.7	576
4. CIMATS	17.9	432
5. Composite	28.3	1000-3000

- Integration with Experiments During Levels IV and V
- Flight Costs
- Utilization Factor
- Ground Equipment
- Operation

The cost of the OEDSF assigned to each of the boundary sensors is based on the fraction of the OEDSF it uses. It is further assumed that in most cases the OEDSF is only used at 50% of its capability because of programming inefficiencies.

The results of the analyses were then extended to full payloads using the concept of the Composite Sensor and its relationship to the Boundary Sensors.

9.2.1 OEDSF COST ELEMENTS

This section describes the determination of the costs of the various elements comprising the OEDSF cost.

OEDSF Hardware Cost. This costs amounts to $48.2K per OEDSF array arrived at by dividing the total cost of $5.7 million to design, develop, build and sell 9 OEDSF units amortized over 250 missions in a 10-year period and includes a 4% refurbishment cost per mission. The $5.7 million cost is based on the Work Breakdown structure shown in Section 11. Details of the estimate are contained in a separate document which has been provided to the NASA Technical Monitor. The requirement for 9 units is based on the integration schedule discussed in Section 9.3. Two units are needed for backup during levels 1 and 2 integration.

Index Generating Program. The generation of the index generating program of the OEDSF for use by all sensors has been estimated at 950K. Details of this estimate are contained in the separate document mentioned above. Since the program will be unchanged for any OEDSF configuration, the cost can be amortized over the number of sensors serviced over many years. Ten years was selected as the period of validity based on anticipation of growth to other technologies after that time period. In order to estimate the number of sensors potentially utilizing OEDSF during the next 10 year period, a sensor utilization model was constructed, as depicted in Table 9-3. The early portion of this model was based on the "Early STS Mission Plan, 1980-1982," by Program Development Organization, NASA-MSFC. (June 1976) For each payload listed on the referenced mission plan, an estimate was made of the number of sensors potentially utilizing OEDSF. The main criteria for establishing whether a sensor is a candidate for OEDSF processing were the complexity of processing, data quantity, and data rates generated. Since the sensor

Table 9-3. Sensor Model for OEDSF Utilization

YEAR	FLIGHT NO.	QTY. OF PAYLOADS	QTY. OF SENSORS PER FLIGHT	QTY. OF SENSORS USING OEDSF
1980	7	AUTOMATED P/L	N/A	
	8	10	30	20
	9	AUTOMATED P/L	N/A	
	10	8 (ASTROPHYSICS)	24	20
	11	AUTOMATED P/L	N/A	
1981	12	5 (PRIM. SP. PROCESSING)	35	2
	13	AUTOMATED P/L	N/A	
	14	11 LIFE SCIENCE	50	10
	15	AUTOMATED P/L	N/A	
	16	INCLUDES APPS	5	1
	17	4 (MULTI-USER)	20	15
	18	AUTOMATED P/L	N/A	
	19	1 (ATL NO. 1)	10	5
	20	1 (LDEF, BESS)	N/A	
	21	7 (MULTIUSER OA)	11	11
	22	AUTOMATED P/L	N/A	
	23	1 LIFE SCIENCES	50	10
	24	AUTOMATED P/L	N/A	
	25	11 (ASTRONOMY	20	15
	26	AUTOMATED P/L	N/A	
	27	5 (PRIM. SP. PROCESSING)	35	2
1982	28	PLANETARY	N/A	
	29	PLANETARY	N/A	
	30	10 (MULTIUSER)	20	20
	31	AUTOMATED	N/A	
	32	AUTOMATED	N/A	
	33	AUTOMATED	N/A	
	34	1 (LIFE SCIENCES)	50	10
	35	INCLUDES APPS	5	1
	36	1 (AMPS)	60	30
	37	AUTOMATED P/L	N/A	
	38	7 (MULTIUSER)	15	13
	39	AUTOMATED P/L	N/A	
	40	1 ATL NO. 2	30	
	41	INCLUDES APPS	5	1
	42	EVAL	30	20
	43	AUTOMATED P/L	N/A	
	44	8 (MULTIUSER)	32	30
	45	AUTOMATED P/L	N/A	
	46	LIFE SCIENCES	50	10
	47	AUTOMATED P/L		
	48	9 (ASTRONOMY)	18	15
	49	PLANETARY	N/A	
	50	AUTOMATED P/L	N/A	
1983	TBD	26	EST. 150	68
1984		28	161	74
1985		32	184	84
1986		33	190	87
1987		31	179	82
1988		33	190	87
1987		32	184	84
			Total	842

REPRODUCIBILITY OF THE
ORIGINAL PAGE IS POOR

complements for many of the payloads are not well defined, the construction of the model for determining programming costs necessitated projected estimates concerning the type of sensors that would be carried, and their characteristics.

Projections of OEDSF utilization during the years 1983-1989 were made using the October 1973 NASA Payload Model, issued by the Director of Mission and Payload Integration Office, NASA-Hq. The number and discipline composition of the payloads for each year in the program were used in conjunction with the ratios of OEDSF-related sensors per payload determined from the above-mentioned analysis for the period 1980-1982. This approach was selected to make maximum utilization of realistic mission model data, which is presented in the open literature for the first three years of the Shuttle Program.

The results of the model show that a total of 842 sensors potentially could use the OEDSF system. This number includes re-runs of sensors on subsequent flights, in recognition of the high probability of the sensor's upgrading/modification between flights as well as the growth and multiplicity of users, that will evolve during the sensor's history.

On the basis of 842 sensors, the cost of general OEDSF software development is approximately 940K/842 = $1.1K per sensor.

Programming of the OEDSF. This cost covers the preparation of the processing requirements for each sensor into a format useable by the IGP, the running of the IGP, and the loading of the OEDSF program memory. This effort is nominal; a value of $500 per sensor has been estimated for it.

Integration with Experiments During Levels IV and V

This subject is discussed in paragraph 9.3 The costs associated with this effort include both hardware or software, and support personnel for operation of the OEDSF simulator equipment and its maintenance.

The following assumptions were made:

- Level V integration lasting 3 months requires 2 men support on a 50% basis or $14,400. Level IV integration lasting 3 months requires 1 man support on a 8% basis or $1200. These costs apply to each experiment because they are time oriented rather than sensor complexity oriented.
- The cost of the OEDSF simulator equipment varies depending on the processing complexity and is assigned to each sensor on an individual basis.

Utilization Factor. This factor is the fraction of the OEDSF used by a given sensor. The OEDSF performs 10^8 operations per second. The number of operations per second used by each sensor is a function of its data rate and processing complexity. The utilization factor for each sensor is a function of its data rate

and processing complexity. The utilization factor for each sensor was derived using the data of Table 4-4. In general, programming techniques allow each arithmetic unit cycle to perform more than one arithmetic operation, as described in Section 7.

Flight Costs. It is assumed that the OEDSF is a payload subsystem rather than a shuttle facility and will thus be charged flight costs. Table 9-4 shows the Recommended User Cost Allocation Rates for Shuttle/Spacelab Utilization from the Final Report of the Study for Identification of Beneficial Uses of Space, dated November 30, 1975; contract NAS8-28179, and the corresponding costs attributable to flying the OEDSF. This table has been updated to reflect a flight cost of $20M per the NASA Preliminary Policy Directive on Reimbursement For Shuttle Services Provided to Civil U.S. Government Users with cover letter dated July 29, 1976.

The weight of the OEDSF is estimated at 21 Kg, its volume at 0.028 cubic meters, and its power consumption at 150 watts. Instrument operation timelines contained in the Payload Description for Sortie Payloads indicate that most instruments operate only a small percentage of the time. To calculate the OEDSF energy requirements we have assumed a very ample 80% duty cycle over a 5-day period.

Table 9-4. Recommended User Cost Allocation Rates for Shuttle/Spacelab Utilization

WEIGHT: 21KG
VOLUME: 0.028 M^3
POWER: 150W (ASSUME 80% FOR 5 DAYS)

SHUTTLE RESOURCE UTILIZED	RATES UTILIZED IN STUDY*	APPLICABLE OEDSF COSTS
UP TRANSPORT VOLUME	$ 25,720/CUBIC METER	$ 720
UP TRANSPORT WEIGHT	$ 203.4/Kg	$ 4,271
ON ORBIT ENERGY	$ 3217/KWH	$46,324
ON ORBIT CREW	$ 12048/MAN HR	N/A
ON ORBIT DATA TRANSMISSION	$ 8011/MHz OF RF BANDWIDTH	N/A
ON ORBIT DATA PROCESSING	$ 4.41/WORD OF EXPERIMENT COMPUTER STORAGE	N/A
DOWN TRANSPORT WEIGHT	$ 374.74/KG	$ 7,870
GROUND OPERATION, MECHANICAL HANDLING	$ 2385/CUBIC METER	$ 67
GROUND OPERATION, ELECTRONIC HANDLING	$ 39.0/WORD OF EXPERIMENT COMPUTER STORAGE	N/A
		$59,252

*BASED ON C_M AVERAGE PER MISSION OPERATIONAL COST = $20 X 10^6

Ground Equipment. The ground equipment required by the OEDSF consists of the tape recorders at the receiving sites and their equivalent at the users' sites. These equipments are also required for raw (non-OEDSF processed) data. They have been excluded, therefore, from the cost computations for both types of systems.

Operational Costs. The OEDSF operates autonomously. Human intervention is permissible but would occur only as a requirement of the instruments. Thus, no operational costs are charged to the OEDSF. The operation costs shown for conventional ground systems are per equivalent mission.

9.2.2 COST COMPARISONS

This paragraph compares the costs of processing data onboard against those of processing on the ground, using the boundary sensors and extrapolating these results to full payloads by means of the composite sensor concept.

The basis for the cost of conventional processing for each of the boundary sensors is derived as described in the applicable paragraphs.

Costs were derived using the formulae shown on Tables 9-5 and 9-6. The comparison requires that the costs be equivalent; the unit chosen for comparison was the cost per sensor per mission. This cost is computed straightforwardly for the OEDSF but is more difficult to obtain for conventional systems as indicated in Table 9-6 which shows the cost as a function of the number of missions to be flown by a particular sensor. We have thus made cost comparisons over a range of missions as shown in Table 9-7. The 260 missions equivalent represents an operational system and is not representative of the shuttle in an experiment carrier mode. It is used here because the ATS ground systems costs are derived from the Landsat Follow-on study which operates the ATS in an operational mode. It is anticipated that most experiments will average two flights.

The OEDSF has been specifically designed to be cost-effective with frequently changing configurations of sensors flying infrequently, whereas operational systems, notably the ATS ground system costed herein, have been designed to be cost-effective with operational invariant payloads. In such a case, cost comparisons would appear to require adjustments; however, it is clear that other systems, such as the RADSCAT were specifically designed for a limited number of experimental flights and that the basis for the cost of their ground system compares identically with those of the OEDSF and are, further, comparable with operational systems costs when normalized for data rate and processing complexity. In other words, ground systems designed for limited numbers of experimental missions appear to cost approximately the same as those designed for operational use. The major difference, which has been reflected in the cost comparisons, is that the general purpose hardware, i.e., computers, can be re-allocated to other uses in the case of

Table 9-5. Cost of Using the OEDSF

$$C_T = \frac{U}{E}\left[NC_u + C_f\right] + C_i + C_s + C_p$$

WHERE,

C_T = COST PER SPECIFIED SENSOR PER MISSION

U = PORTION OF OEDSF UTILIZED BY SENSOR - DERIVED FOR EACH SENSOR

E = EFFICIENCY OF UTILIZATION OF THE OEDSF - FUNCTION OF NUMBER OF SENSORS

N = NUMBER OF OEDSF TO SUPPORT MISSION = 1 (UNIT ONBOARD) + 2/7 (BACKUP) ≅ 1.3

C_u = COST OF OEDSF HARDWARE = AMORTIZED COST OF OEDSF + REFURBISHMENT
ASSUME 25 MISSIONS PER YEAR X 10 YEARS = $\frac{250}{9}$ = 28 FLIGHTS/OEDSF

ASSUME 4% of HARDWARE COST PER FLIGHT REFURBISHMENT COSTS
= $\frac{636K}{28}$ + 0.04 x 636K = $48.2K

C_f = FLIGHT COST = $59.3K

C_i = INTEGRATION COST = $15,600 + COST OF SIMULATOR EQUIPMENT

C_s = AMORTIZED COST OF IGP = $\frac{\$950K}{842 \text{ SENSORS}}$ = $1.1K

C_p = COST OF PROGRAMMING SENSOR WITH IGP BEFORE EACH FLIGHT
= $0.5K

Table 9-6. Cost of Conventional System

DEDICATED FACILITIES (SINGLE OR FINITE GROUP)

$$C_T = (C_H + C_{CS})\frac{U}{F} + \frac{C_{DS}}{F} + C_O U$$

WHERE

C_T = COST OF CONVENTIONAL SYSTEM PER MISSION PER SPECIFIC SENSOR

C_H = HARDWARE COST

C_{CS} = COMMON SOFTWARE

U = PERCENTAGE SHARE OF FACILITY USAGE

C_{DS} = DEDICATED SOFTWARE

C_O = OPERATIONAL COST OF FACILITY

F = NUMBER OF MISSIONS FLOWN BY SPECIFIC SENSOR

COMMON SHARED FACILITIES (GENERAL PURPOSE COMPUTERS)

$$C_T = AC_A + \frac{C_{DS}}{F}$$

WHERE

C_A IS COST PER UNIT TIME FOR USE

A IS TIME REQUIRED TO PROCESS MISSION DATA

Table 9-7. Data Processing Cost Comparisons as a Function of Total Missions

INSTRUMENT	EQUIVALENT NUMBER OF MISSIONS (OVER 10 YEARS)	CONVENTIONAL SYSTEM COST PER MISSION $K	OEDSF COST PER MISSION 20 SENSORS	10 SENSORS	5 SENSORS
ATS	260	24.0	123.6	123.6	123.6
	130	44.3	123.8	123.8	123.8
	20	268.0	125.5	125.5	125.5
	2	2648	163.9	163.9	163.9
IRS	260	14.8	2.6	3.7	5.8
	130	17.0	2.7	3.8	5.9
	20	42.0	3.4	4.5	6.6
	2	307.5	18.4	19.5	21.6
RADSCAT	260	79.4	2.0	2.3	3.1
	130	83.3	2.1	2.4	3.2
	20	125.6	2.8	3.1	3.9
	2	575.6	17.7	18.0	18.8
CIMATS	260	45	2.2	2.9	3.3
	130	48	2.3	3.0	3.4
	20	81	3.0	3.7	4.1
	2	432	17.9	18.6	20.0

experimental programs. The hardware costs have, therefore, been subtracted from the cost of these stations. Similarly, the costs of integrating the OEDSF with the experiments at levels 5 and 4 integration are considered to repeat for the first two flights—thereafter, these costs are not repeated and are shown as prorated over the number of flights.

ATS Cost Comparisons

The Advanced Technology Scanner utilizes 62% of the OEDSF capabilities. This usage factor represents the utilized fraction of the total rate of operations that can be performed on the OEDSF; i.e., 10^8 operations per second. The factor was determined by overlaying the set of OEDSF array instructions as each of the processing functions, as derived in the processing flows in Task II of the study.

The Advanced Technology Scanner requires processing at several internal rates. Further, these processes are shared and are band interactive.

For example, the location of a sample set within the data is required for each spectral band; however, the computation of this value for one band is used by another band. Consequently, the function is performed at

1/7th of the required rate. The computations for the Advanced Technology Scanner processed by the array are:

1. Scan line computations
2. Pixel computations
3. Band-to-band computations

The utilization does not include the geometric model computations which are normally computed in a support processor. The low utilization factor allows this model to be computed by the OEDSF in a single array, dedicated to the ATS sensor.

Table 9-8 shows some of the characteristics that were estimated in determining the usage factor for ATS.

Table 9-8. ATS Usage Factor Characteristics

CHARACTERISTICS	VALUE
Scan Line Period	2.5×10^{-4} sec.
Number of Operations per Line	36
Scan-Line Loading	1.5×10^{5} ops/sec.
Array Utilization	0.14%
Operations per Pixel	4
Pixel Loading	6×10^{7}
Array Utilization = PIXEL LOADING/OEDSF RATE = 62%	

The ATS sensor is described in Appendix A of the OEDSF Task 1 report; its processing requirements are described in Paragraph 3.1 of the OEDSF Task 2 report. The multi-spectral scanner class sensor requires two distinct processes—radiometric and geometric correction. The preprocessing system developed by the General Electric Company Space Center, Valley Forge, Pa. for the Thematic Mapper is the same generic system required for the Advanced Technology Scanner derived in the Landsat Follow-on study. The functional block diagram is shown in Figure 9-2.

The OEDSF performs Calibration, Radiometric correction and Geometric correction in real time on all the data. Only those segments of the ground processor associated with these functions are considered in the costs. The ATS ground processor operates only on good data by editing out undesirable scenes prior to processing; however, it operates only on the selected scenes at a considerably reduced rate from that of the OEDSF. Overall, the useful data throughput is equivalent in that the OEDSF operates on all the data in

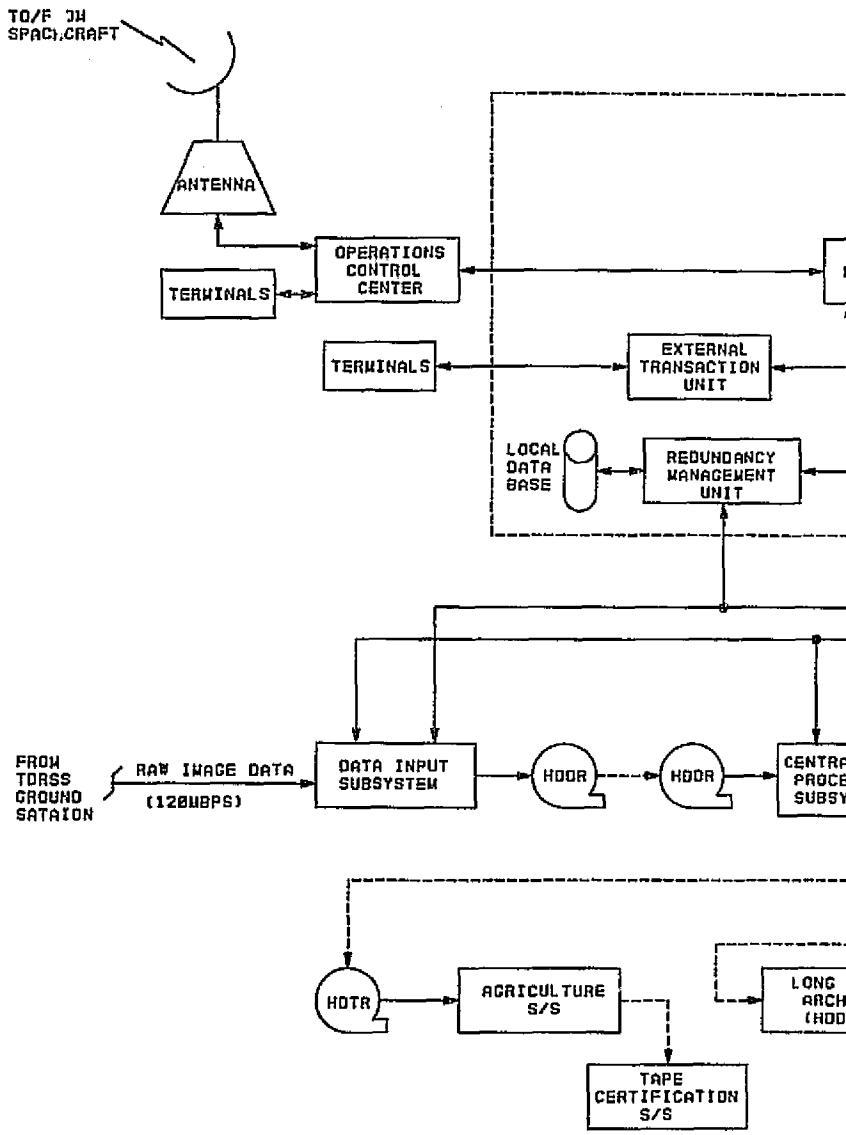

LAN
DATA MANAGEMEN

FOLDOUT FRAME

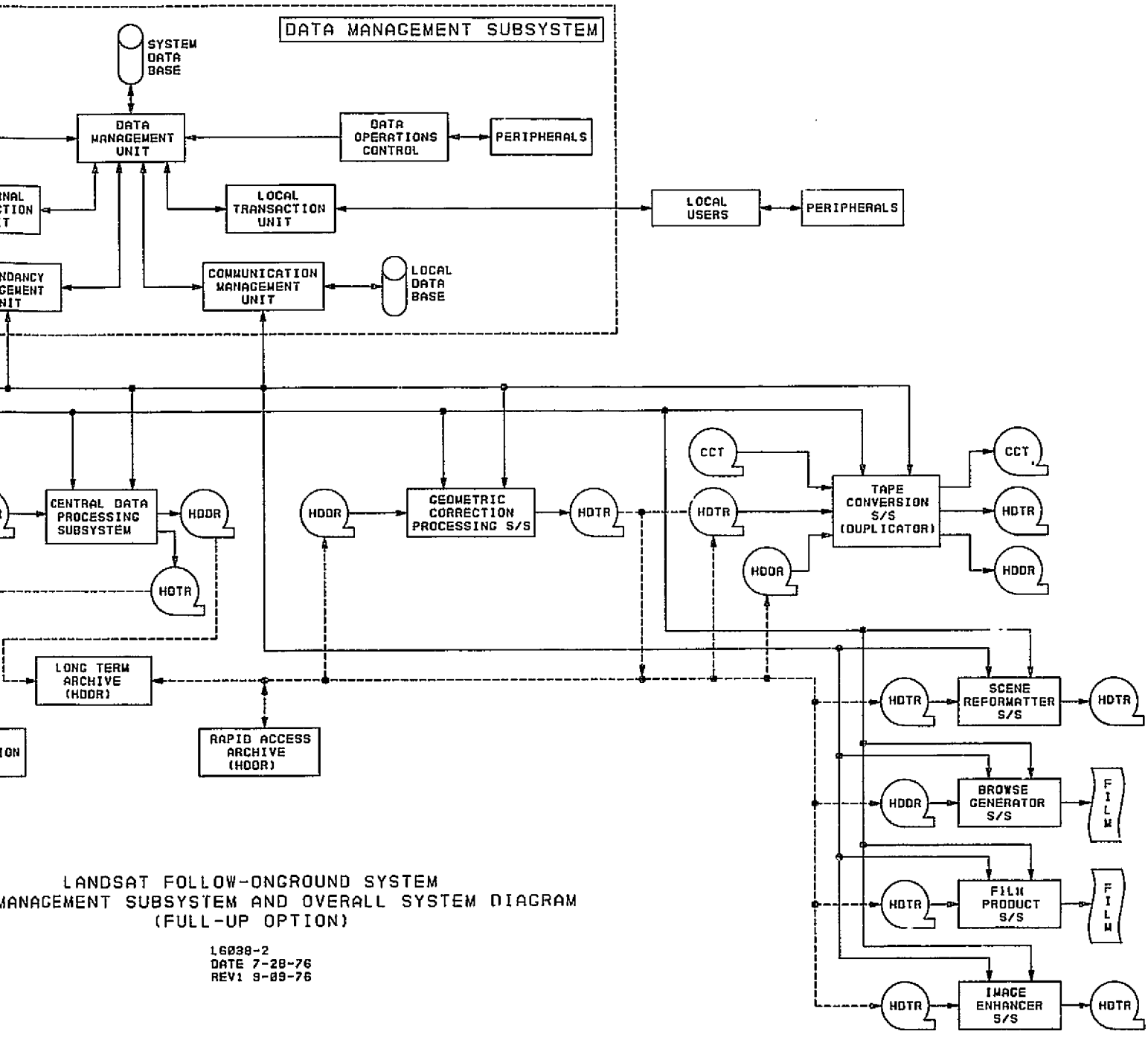

LANDSAT FOLLOW-ONGROUND SYSTEM
MANAGEMENT SUBSYSTEM AND OVERALL SYSTEM DIAGRAM
(FULL-UP OPTION)

L6038-2
DATE 7-28-76
REV1 9-09-76

Figure 9-2. Advanced Image Processing System

FOLDOUT FRAME 2

the same time frame in which the ground system operates on selected scenes. The cost of the scene selection portion of the ATS ground system is charged to the ground system because, although it also provides features not present in the OEDSF processing, it is the means by which the ground segment maintains a throughput rate consistent with the input volume.

The cost elements on Table 9-9 consider the following:

1. Program Management - includes the project control functions of planning, scheduling, and coordinating all activity related to the development/construction of the facility.

2. Systems Engineering/Integration - related to interface-related analysis and design efforts, and technical direction during portions of the program.

3. Facility Equipment includes the data processing equipment required to implement the facility.

4. Integration and Test - encompasses those tests performed on the assembled ground processing system, including simulations, site integration and checkout, and training.

5. Software Development - refers to the program development specifically tailored to the particular sensor.

6. Mission Operations - covers the cost of ground operations necessary to reduce the data.

Table 9-9. ATS Preprocessing Ground Facilities Cost Summaries

	ENG'G $K	MFG AND QA $K	MAT'L $K	TOTAL $K
PROGRAM MANAGEMENT	591			591
SYSTEM ENGINEERING	384			384
FACILITY EQUIPMENT	400	450	2382	3232
INTEGRATION AND TEST	348	28		376
SOFTWARE DEVELOPMENT	705			705
TOTAL	2428	478	2382	5288
MISSION OPERATION	943/YEAR			943/YEAR

The composition of the ground operation crew is varied and includes computer technicians, maintenance personnel, management, and user liaison personnel. The portion of the crew estimated herein considers the time-sharing of the various skills represented in the crew, as required to perform only the ATS data radiometric and geometric corrections, and the data selection and editing.

The corresponding OEDSF costs are summarized below using the formula given in Table 9-5. The cost of OEDSF simulation equipment is estimated at $24,800.

$$C_T = [1.3(48.2) + 59.3] + 40.4 + 1.1 + 0.5 = \$163.9K$$

Actually, since the ATS would utilize a dedicated OEDSF the efficiency of programming would be considerably higher than 50% such that this estimate derived for multiple sensor scheduling is not applicable. In practice a full OEDSF array would be allocated to the ATS such that the U/E ratio would be unity.

IRS Cost Comparison. The IRS uses 0.43% of the OEDSF capabilities. The data processing complexity is relatively high but the data rate of a few kilobits per second is five orders of magnitude below the OEDSF rate.

The IRS sensor is described in the OEDSF Task I Report. Its data processing requirements are contained in the Task II Report.

Data Routing to GISS. The IRS data (together with data from several other instruments) obtained during Nimbus flight is stored on the High Data Rate Storage System (HDRSS) on-board the spacecraft for subsequent play-back to ground using the S-band channel. Data from the HDRSS is routinely received at two Spaceflight Tracking and Data Network (STDN) stations located near Fairbanks, Alaska and Rosman, North Carolina. The data acquired at Alaska are recorded during the pass and then transmitted over a microwave link at reduced rates to the Meterological Data Handling System (MDHS) at GSFC. Data acquired at Rosman are relayed directly to GSFC over a wideband data link. Approximately 90% of all data are acquired by the Alsask STDN.

The MDHS decommutates the IRS data from the spacecraft data stream and transmits it via computer-to-computer data link to the Goddard Institute for Space Studies (GISS) on an orbit-by-orbit basis. Multi-orbit magnetic tapes containing the same data are courier-delivered to NOAA/NESS, Suitland, Maryland, for developmental back-up processing and research purposes. Digitized tapes of IRS data containing calibrated, located radiances are produced for archiving at the National Space Science Data Center (NSSDC) at Greenbelt, Maryland. The total IRS data flow is summarized in Figure 9-3.

Data Processing Requirements. The raw digital data is routinely processed at GISS using computer software developed by NOAA/NESS. The primary outputs are nine track, 1600 bpi magnetic tapes containing calibrated, located radiances. The tapes are produced using the IBM 360/195 at GISS or the IBM 360/195 at NOAA.

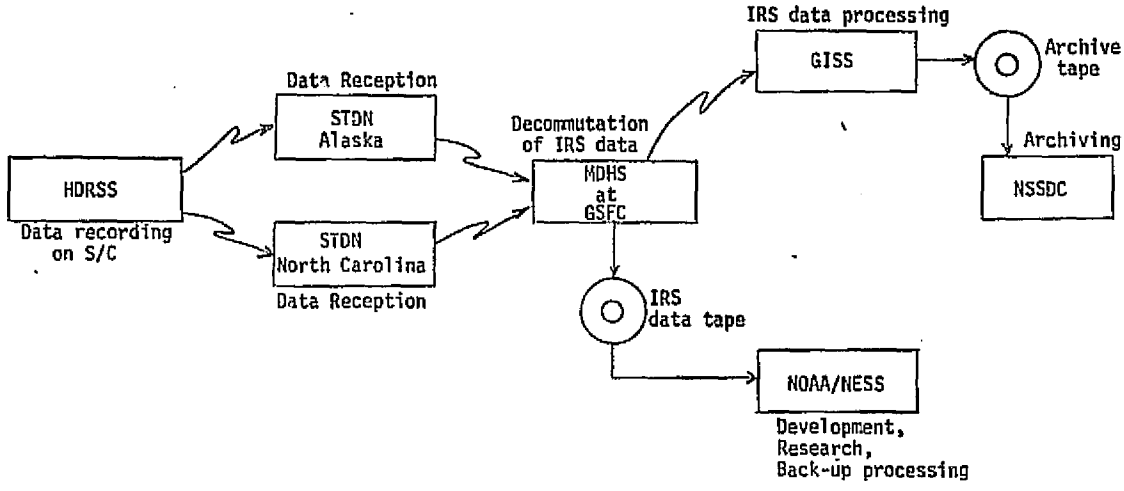

Figure 9-3. IRS Data Flow

The processing software consists of 6 basic computer programs whose functions are listed below:

1. INGEST - produces located radiances
2. ARM - calculates clear column radiances
3. RET - calculates temperature and mixing ratio profiles
4. COEFF - generates coefficient matrix
5. SFC - performs surface analysis
6. MULT - performs multi-level analysis.

The processing sequence for these programs is given in Figure 9-4.

Since the data reduction is performed using a rented system, the IBM 360/195, the cost of the software development is in essence the cost of the six programs enumerated above.

The cost of the conventional processing for IRS data is shown in Table 9-10.

REPRODUCIBILITY OF THE ORIGINAL PAGE IS POOR

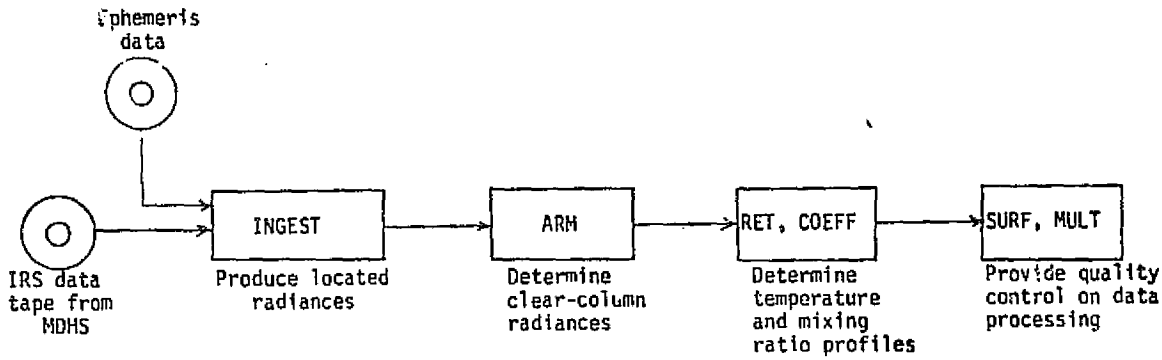

Figure 9-4. IRS Data Processing Sequence

Table 9-10. IRS Processing Ground Facility Cost Summary

	COST ($K)
PROGRAM MANAGEMENT	50
SYSTEM ENGINEERING	50
FACILITY EQUIPMENT	RENTAL COSTS SHOWN UNDER OPERATION
INTEGRATION AND TEST	60
SOFTWARE DEVELOPMENT	
PROGRAM "INGEST"	161
PROGRAM "ARM"	86
PROGRAM "RET"	21
PROGRAM "COEFF"	54
PROGRAM "SFC"	27
PROGRAM "MULTI"	81
TOTAL	590
MISSION OPERATION	
IBM 360/195 TIME	10/MISSION
MANPOWER	2.5/MISSION

The cost of processing IRS dat v h the OEDSF is given by the equation in Table 9-5. The cost of OEDSF simulation equipment is estimated a: $172.

$$C_T = \frac{0.0043}{0.5} [1.3(48.2) + 59.3] + 15.8 + 1.1 + 0.5$$

$$= \$18.45K$$

RADSCAT Cost Comparisons. The RADSCAT sensor is described in the OEDSF Task 1 Report, its processing requirements in the Task 2 Report.

Figure 9-5 identifies the operations that must be performed by the data processing facility and the main hardware equipments. There are four separate operations:

1. Conversion of the 28 track EREP PCM tapes to a 14 track equivalent
2. Conversion of the 14 track tapes to a computer compatible format
3. Conversion of raw RADSCAT data to σ_0 (radar backscatter cross-section) and T ANT (radar antenna temperature) as a function of time and geographical position. (Housekeeping data is also analyzed and processed.)
4. Generation of tabs and plots.

The portions of the EREP data processing facility applicable to the RADSCAT consist of the following hardware equipment:

1. 28 & 14 track PCM tape recorders
2. PCM Decomm
3. PDP-11/45 computer (2)
4. FR-80 Micro-filmer

The facility also includes an array processor used exclusively for pre-processing filtering of S192 data, and therefore, not charged against the S193.

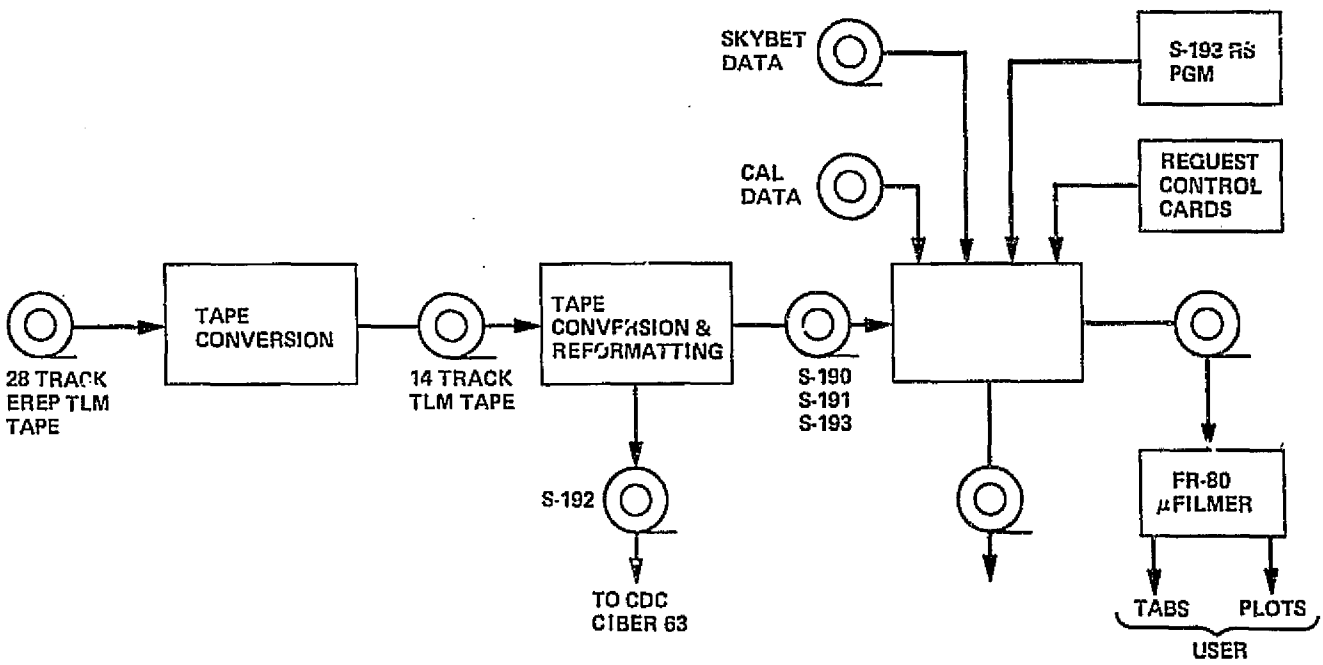

Figure 9-5. EREP Processing Operations

Each PDP-11/45 computer is a 16 bit machine with the following characteristics and peripherals:

1. Core Size 64K
2. Core Speed 0.5 Microseconds
3. 2 Discs, 10^6 Words Each
4. 4 Tape Recorders

Figure 9-6 represents the flow chart of the S-193 RS program to process the RADSCAT data. A functional description of this program, excerpted from the ERS-100-05 program definition manual, (Sec. 2.4) is as follows:

> The S-193 RS Program reads Radiometer/Scatterometer data from a High Density or 9-track tape which has been constructed from a 28-track EREP tape. These data are comprised of status words, housekeeping data and radiometer/scatterometer data in 10-bit words.
>
> First, the control input data, such as edit parameters and output processing options input to the S-193 RS routine, determine what further inputs are required to fulfill the processing option requests. These requests can assume two forms: raw sensor data or processed sensor data in engineering units. Thus, the processing for the S-193 RS routine is divided into two distinct phases or data passes. Both phases, however, may process only a maximum of ten minutes of sensor data at any one request. These sensor data specified for one of the two data passes are input to the S-193 RS routine via either high density tape or 9-track. Because of the high data rate of the high density tape, the routine Decom 1 is used to transfer the Sensor Data to an intermediate device, namely disk. Then the routine DCOM2N can successfully transfer the data from disk to core. On the other hand, if the input source is 9-track tape, DCOM2N can transfer the sensor data indirectly from tape to core.
>
> Within both processing phases of the sensor data from tape, either high density or 9-track, several processing subsets are available depending upon the requested option. It should be noted, though, that in both processing phases, the integrity of the data "sync", must be established for each frame, otherwise the data are merely bypassed for the next data frame. This procedure continues until valid data are found. Then the processing of the data as outlined below proceeds.
>
> If raw data tabulations or plots are desired, the raw data with any necessary data corrections are output immediately to disk for intermediate storage. There the data will reside until all the processing options have been exercised and then the routine DSKSUP will read the data for tabulation/plot processing.
>
> Another raw data product is the 9-track CCT containing raw S-193 sensor data in non-imagery universal format. The S-193 RS routine need not be exercised for this product, though, since the stand-alone routine RAWPRC produces this requested output.
>
> All the remaining data products are produced in the second phase of the S-193 RS routine processing. One product is a nine-track computer compatible tape in non-imagery universal format. This tape, created by the routine NIMUP, contains the RAD/SCAT housekeeping

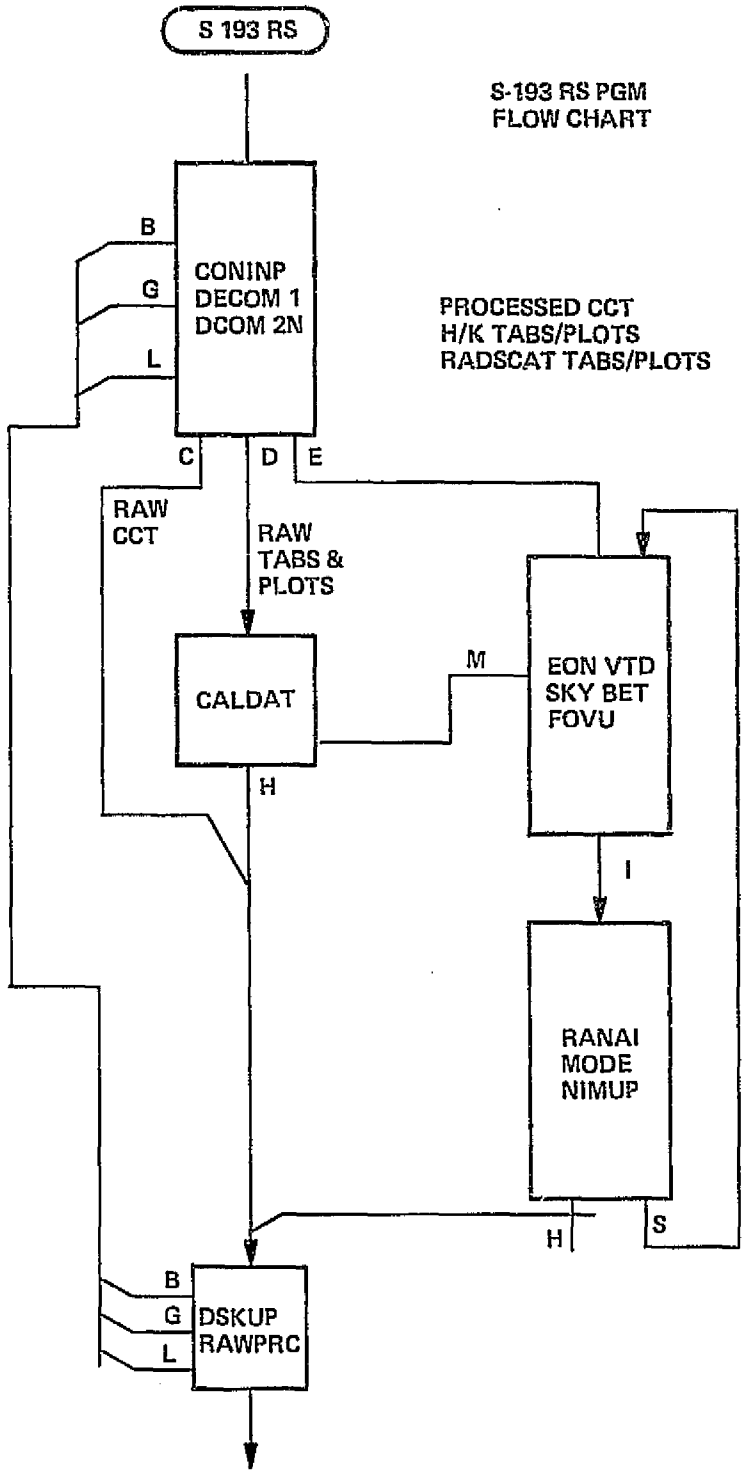

Figure 9-6. S-193 Program

data in engineering units, Skylab ephemeris data, center of the sensor field of view, the radiometer antenna temperature and the scatterometer backscatter coefficients. In order to create this tape, the raw data are first converted to engineering units by the routine CONVTD. Next, the subroutines SKYBET and FOVIEW are used to provide the necessary Skybet ephemeris data and center of the sensor field of view. These data are then used in the next important step: RAD/SCAT science data processing. The subroutine MODE makes the discrimination whether the data are RAD or SCAT and flags the appropriate routine. If the data are radiometer, the routine RADANT calculates the radiometer antenna temperature. If the data are scatterometer, the SCATBK routine provides the scatterometer backscatter coefficients. When these routines have been successfully completed, the data can be transmitted to tape.

Concurrent with the above procedure, the housekeeping data and/or RAD/SCAT/Skybet/Field of View data may be written on three disk files for later tabulation/plot processing. Then when all the processing options have been completed, the data retained on disk can be read back into core by the DSKSUP routine for tabulation/plot processing. Then the routine GTTAB is called if housekeeping scatterometer/radiometer or Skybet/Field of view tabulations are desired. If plots are desired, GTPLOT is called.

The cost estimate for the portion of the EREP data processing facility utilized by the RADSCAT sensor is shown on Table 9-11 and the hardware and general purpose software costs have been allocated accordingly. The estimate is based on 20% utilization of the EREP data processing facility used by RADSCAT. The mission operations cost, Item 6, is based on RADSCAT's 20% utilization of 30-person ground facility staff.

EREP tapes containing RADSCAT data recorded on Skylab flights were returned to the EREP data processing facility at JSC for processing. The operations performed on the RADSCAT were of a specialized nature requiring either hardware of software not normally available to RADSCAT data users.

Table 9-12 illustrates the amount of RADSCAT data collected on the three Skylab missions and the time required for processing this data.

Table 9-11. RADSCAT Skylab Ground Facility Cost Summary

	ENG'G	MAT'L	TOTAL
PROGRAM MANAGEMENT*	100		100
SYSTEM ENGINEERING*	80		80
FACILITY EQUIPMENT*		180	180
INTEGRATION AND TEST*	360		360
SOFTWARE DEVELOPMENT*	460		460
TOTAL	1000	180	1180
MISSION OPERATION*	75.6/MISSION		

* PRORATED ON BASIS OF 20% OF TOTAL FACILITY AND OPERATIONS EXPENDITURES

Table 9-12. RADSCAT Data Summary

MISSION	NO OF RADSCAT PASSES	NO. OF TAPES TOTAL/ RADSCAT	RADSCAT DATA SEGMENTS (TIME SLICES) **	TOTAL DATA TIME SEC.	AVERAGE SEGMENT TIME SEC./MIN.	MISSION * PROCESS TIME HRS MIN./MAX.
Skylab 2	13	4/2	64	6546 (2 Hrs.)	102/1.7	60/80
Skylab 3	28	6/3	111	13818 (4 Hrs.)	124/2	120/160
Skylab 4	40	10/5	141	22953 (6 Hrs.)	163/2.7	180/240

* Does not include time for 28/14 TRACK TAPE conversion (1 day delay added)

* 3 shift operation (complete reprocessing of S/L #2 & 3 because of various errors)

** RADSCAT data was recorded on 50% of PASSES

The RADSCAT uses 0.15% of the OEDSF capability. This low percentage is due to its low data rate and simple processing requirements. The cost of processing RADSCAT data using the OEDSF is determined from the formula described earlier. The cost of materials assumed for simulation is $100.

$$C_T = \frac{0.0015}{0.5} \left[(1.3)(48.2) + 59.3 \right] + 15.7 + 1.1 + 0.5$$

$$C_T = \$17.67K$$

CIMATS Cost Comparisons

The CIMATS sensor is described in the OEDSF Task 1 Report; its data processing in the Task 2 Report. The block diagram of the overall ground data system is illustrated in Figure 9-7. CIMATS interferogram data is transmitted from the spacecraft to a ground station as a PCM signal multiplexed with other sensor signals. CIMATS data and its related ancillary data are extracted from the PCM recorded tape, merged on a time basis with ephemeris data, and recorded on a computer compatible tape in a designated format. At the user facility CIMATS interferogram data is analyzed for its gas constituents using a correlation technique based on a set of calibration interferograms derived from ground testing.

Central Facility

The central facility, based on the concept of the EREP facility, consists of special hardware for playback of the time annotated multi sensor PCM tape and a computer (expected to be a 16 bit mini-computer) for the sensor decommutation and ephemeris merging functions. The computer has appropriate I/O and auxiliary memory devices to support these data processing operations, and a set of programs to execute them. The

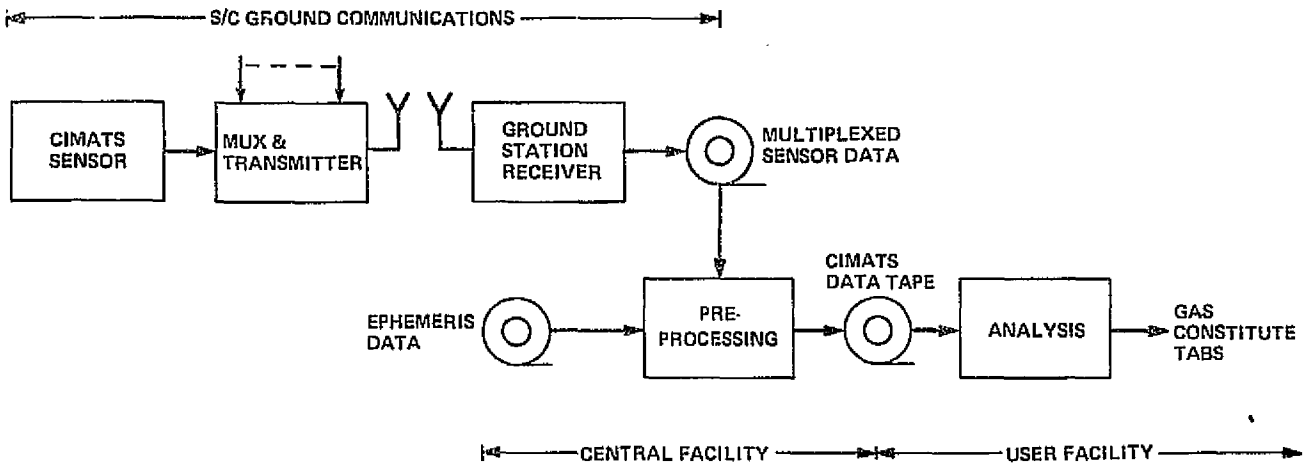

Figure 9-7. CIMATS Data System

specific functions performed by these programs are shown in Figure 9-8. In addition to these specific functional programs, a set of general purpose programs are required to perform overhead functions.

During execution of the decommutation function, temperature and cloud cover sensor data, derived from other S/C sensors, must also be provided to aid in the gas constituent analysis program.

Cost of mission operations is based as in the EREP case on a 10% allocation of a 30 men crew during data processing.

In addition the central facility appropriately flags tape playback data that fails to pass validity checks. This alerts the CIMATS user to data of questionable quality.

User Facility

The processing operations, performed on CIMATS data to identify the type and concentration of gas pollutants, are shown in Figure 9-9. CIMATS interferogram data may be taken in either the vertical nadir mode or the tangential limb mode. In both modes an interferogram consisting of 58 samples is analyzed by using sets of gas correlation tables unique to each target gas. The results designate the type and concentration of each of nine gas species as a function of location for the nadir mode, or of altitude for the limb mode.

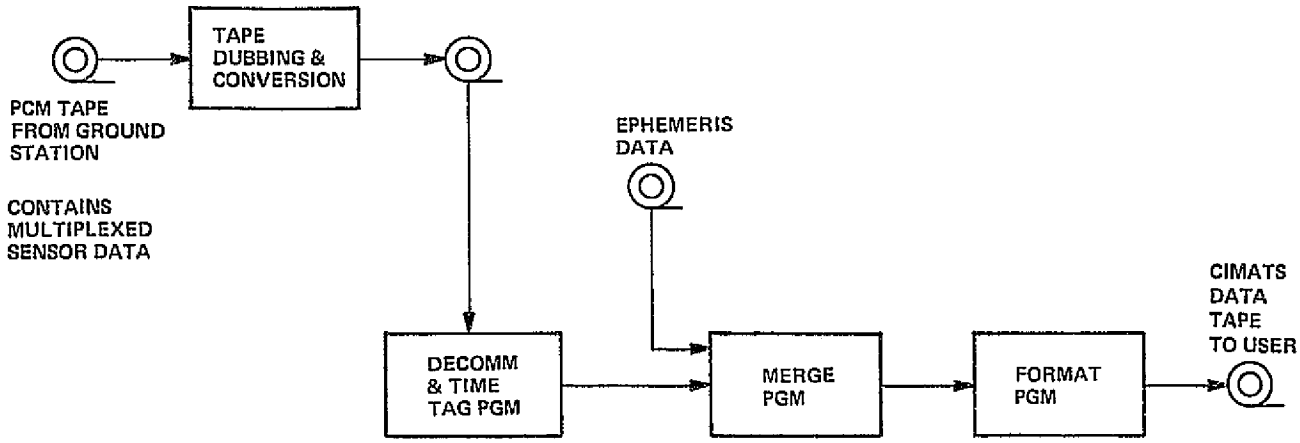

Figure 9-8. Central Facility Data Functions - CIMATS

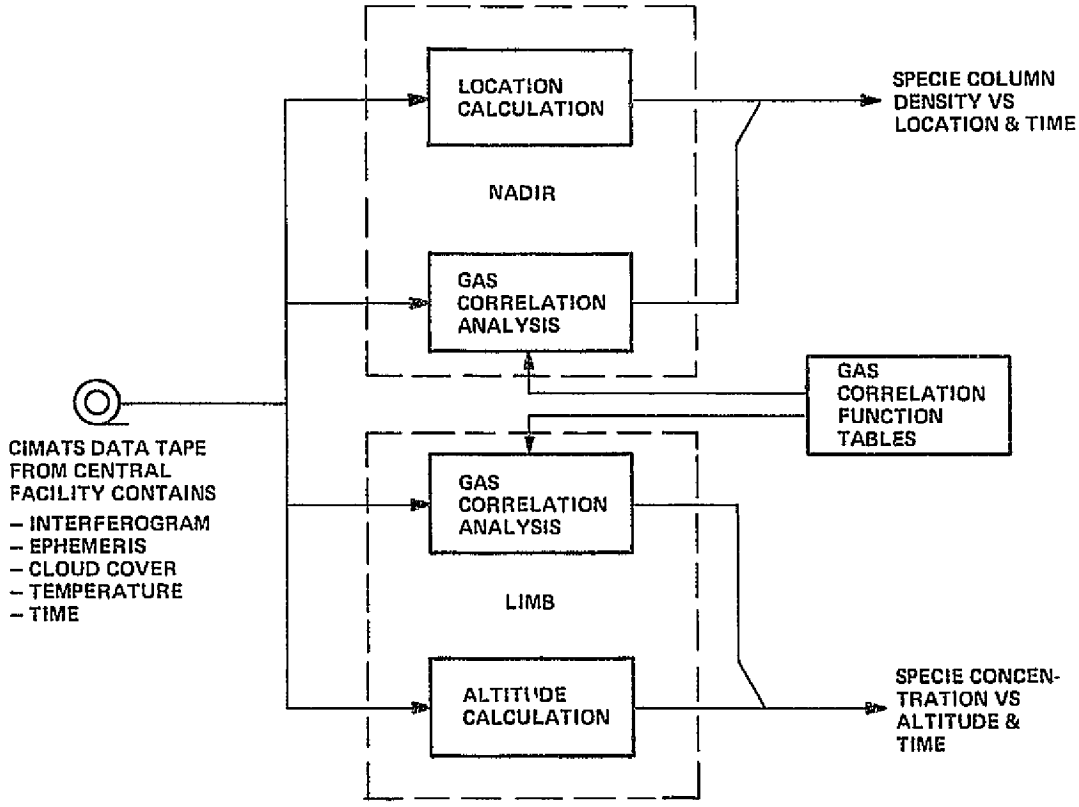

Figure 9-9. User Facility Data Functions - CIMATS

Because the resolution of the CIMATS fore-optics is by nature relatively low (sensor field of view is 21 x 21 miles minimum at an earth-centered altitude of 4600 miles), the precision and resolution afforded by floating point arithmetic are not a requirement for the location and altitude computations. Correspondingly since each of the 58 samples of an interferogram is represented by a 12 bit digital word, the computations associated with the correlation integral also do not demand floating point arithmetic. Therefore even

a 16 bit minicomputer with only a fixed point arithmetic capability is suitable to execute the CIMATS program. However if ephemeris data is presented in a floating point format to the central facility, it would be more appropriate for the user to maintain that format and to program for a computer with floating point arithmetic.

Because of the relatively narrow path coverage of the CIMATS sensor and correspondingly because of the relatively long period of time required for sensor coverage of a selected area, the results of the gas analysis are best presented in a tabular form rather than in a map overlay format. Typically the format of the tabular listing would contain columns for time, location/altitude, and the nine target gases.

Two complementary facilities were costed for CIMATS:

1. A CENTRAL FACILITY, where general pre-processing operations are performed. These operations, common to several users, require hardware and software not normally available to CIMATS users. It is assumed that CIMATS would use 10% of this facility.

2. A USER FACILITY, where the data is evaluated, and where the processing parameters are adjusted and the experiment results interpreted.

The costs associated with these facilities are shown in Table 9-13.

The CIMATS uses 0.26% of the OEDSF capabilities. The cost of the OEDSF simulation equipment is estimated at $100. The cost of processing CIMATS data with the OEDSF is given by the cost formula described earlier.

$$C_T = \frac{\$0.0043}{0.5} \left[(1.3)(48.2) + 59.3\right] + 15.7 + 1.1 + 0.5$$

$$= \$17.93$$

Cost Comparison of the Composite Sensor

The composite sensor has been defined in Section 5.

Since this sensor is hypothetical in that it is an average of many sensors there is no specifiable set of ground equipment for its data processing. The costs of conventional processing for the composite sensor were therefore derived from those of the boundary sensors by comparison of data rate, processing complexity and analysis of the cost elements in the facilities of the boundary sensors.

The most common approach to ground data processing is by means of general purpose computers. The data is processed in non-real time, therefore the data rate impacts only the quantity of data to be

Table 9-13. CIMATS Ground Facility Cost Summary

	CENTRAL FACILITY			USER FACILITY			TOTAL
	ENG'G	MAT'L	TOTAL	ENG'G	MAT'L	TOTAL	
PROGRAM MANAGEMENT*	50		50	5		5	55
SYSTEM ENGINEERING*	40		40	5		5	45
FACILITY EQUIPMENT*		90	90	100	100	200	290
INTEGRATION AND TEST*	180		180	20		20	200
SOFTWARE DEVELOPMENT*	230		230	150		150	380
TOTAL	500	90	590	280	100	380	970
MISSION OPERATION*	38 /MISSION			4/MISSION			42/MISSION

* PRORATED ON BASIS OF 10% OF TOTAL FACILITY AND OPERATIONS EXPENDITURES

processed. The major costs in such a system are the programming effort (software) and the operation. Computer use charges are small unless the quantity of data and the processing complexity require substantial time on a large machine.

The processing complexity of the composite sensor is approximately equal to that of the boundary sensors. Its data rate is almost two orders of magnitude higher than the 3 lowest rate sensors and almost two orders of magnitude lower than that of the ATS. Accordingly, we have assigned a range of cost to this system caused by variations in the operational and computer utilization costs which depend on the quantity of data processed. The lower limit of this range is the average of the lower cost boundary sensors facilities; i.e., $1 million. The upper range is 3 times this amount.

The cost of processing the composite sensor on the OEDSF is determined using the formula in Table 9-5. The utilization of the OEDSF by the Composite sensor is 2.5%. The cost of the OEDSF simulation equipment is assumed to be $5000.

The onboard processing cost is therefore:

$$C_T = \frac{0.025}{.5} \left[(1.3)(48.3) + 59.3 \right] + 20.6 + 1.1 + 0.5$$

$$C_T = \$28.3K$$

9.2.3 EXTRAPOLATION TO FULL PAYLOADS

A full payload consists of approximately 20 composite sensors. This considers only instruments of interest to the OEDSF. This number already assumes the 50% efficiency factor of the OEDSF. The total data rate of this payload is 3.8 megabits per second. The cost of processing these sensors onboard by the OEDSF is given by:

$$C_T = (1.3)(48.2) + 59.3 + (20)(20.6) + 20(1.1) + 20(0.5)$$

$$= \$65.96K \text{ per mission.}$$

The comparable conventional ground systems cost would range between $20,000K and $60,000K plus their operational costs.

9.2.4 TDRS LINK COST CONSIDERATIONS

The preceding analyses have not considered cost savings effected by bandwidth reduction. The additional communication load imposed by the higher data rates required in the ground processing approach has an impact on TDRS system cost. For the purposes of this study, the total cost of the TDRS system over a given period is distributed among its users in direct proportion to the amount of data (i.e. number of bits relayed to the ground). This simplified approach does not factor in other services of the TDRS, such as tracking and relaying of analog data. The TDRS system capabilities considered are:

- 20 Multiple-access channels at 50 Kbps: 1 Mbps total
- 2 Single Access S-Band access channels at 6 Mbps: 12 Mbps total
- 2 Single Access K-Band access channels at 300 Mbps: 600 Mbps total

The cost of the TDRS system is best expressed in terms of the lease cost to NASA, according to the currently proposed agreement between the selected TDRS manufacturer and the Government. The cost of leasing the TDRS has not been established; however, a figure of $80 million is generally accepted as an approximate lease fee during the early portion of the TDRS operational program.

It was assumed that 1/8th of the total TDRS cost would be apportioned to the multiple access users, and the remainder to the higher data rate single users. This portion, although arbitrary, is based on several iterations to arrive at an equitable cost breakdown that considers the per-channel service cost as well as the bandwidth requirements attendant to that service. On this basis, and assuming an 80% duty factor (due to TDRS occultation), the costs are as follows:

- MULTIPLE ACCESS CHANNELS: $\$3.0 \times 10^{-7}$ per bit
- SINGLE ACCESS CHANNELS: $\$4.72 \times 10^{-9}$ per bit

The impact of this cost can be illustrated by application to a high data rate instrument such as the ATS. Each hour of transmission of the ATS data costs:

$$120 \times 10^{6} \text{ bits/sec} \times 3600 \text{ sec/hr} \times 4.72 \times 10^{-9} \text{ \$/bit}$$

$$= \$2039$$

9.3 LEVEL IV/V INTEGRATION

Checkout and Simulator Requirement

Experiment test and checkout during the final stages of design and development is variously referred to as acceptance testing, verification testing, or Level V integration. At this time simulations or representations of Shuttle/Spacelab interfaces (physical, functional, operational) are required, including those of OEDSF when it is utilized. Similar interface simulations are needed when experiment equipment is combined into payload subassemblies (Spacelab racks or pallets) during Level IV integration. Figure 9-10 illustrates OEDSF and Spacelab C&DM simulation requirements for Level IV/V integration.

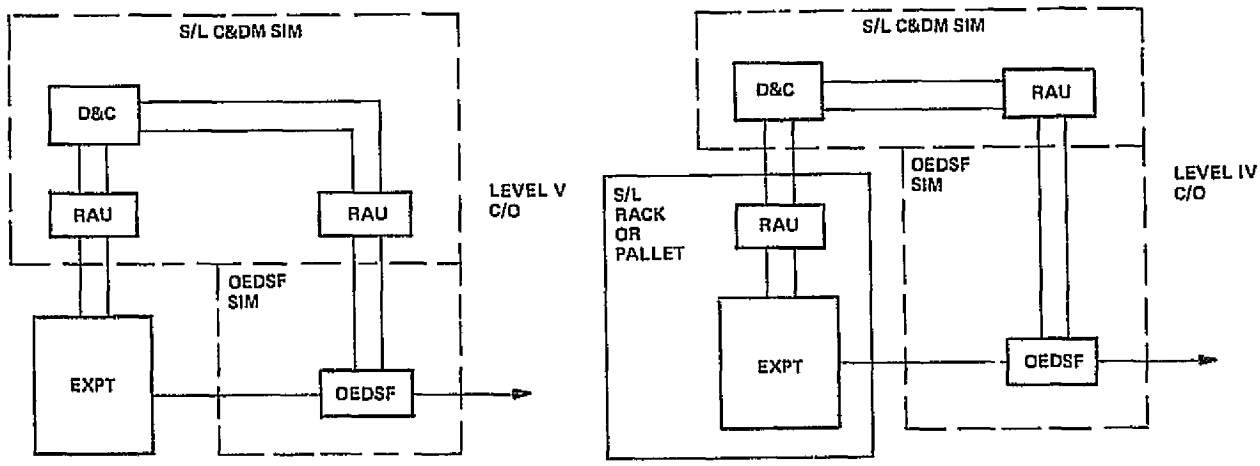

Figure 9-10. Level IV/V Simulation Requirements

Spacelab flights begin in mid-1980 and build up to a level of about one per month in 1982. Figure 9-11 shows the current spacelab flight schedule through 1982 and summarizes Level IV/V operations required to support this schedule. The following assumptions are made:

1. Level IV integration takes 3 months starting 6 months prior to launch
2. Level V integration takes 3 months starting 9 months prior to launch
3. There are 15 experiments using OEDSF on each Spacelab flight

Allowing for variations in experiment checkout requirements and reflecting worst case Level IV integration requirements, the user trends on the lower portion of Figure 9-11 have been developed. The curves show that OEDSF must support Level V checkout of a few experiments starting in mid-1979 and must be able to support checkout of 45 experiments at any given time by late 1981. OEDSF must support a single Level IV integration effort in early 1980, two simultaneous efforts starting in late 1980, and three efforts at any given time from mid-1981 on.

Simulator Alternatives

Current planning for the Spacelab C&DM System has identified these approaches for integration support: A hardware simulator, a software simulator, or a characteristics list. OEDSF can consider these same approaches plus using actual flight hardware, and, in addition, can offer full or partial capability in a hardware simulator. C&DM and OEDSF approaches are shown in Table 9-14 along with OEDSF alternatives for Level IV/V integration using various combinations of approaches. Fifteen OEDSF alternatives are identified, using the ground rule that Level IV checkout will utilize the same or greater capability than Level V.

Rationale and Comparison

The five OESDF approaches have the following characteristics and requirements:

1. FLIGHT HARDWARE - Sufficient quantities of flight units to support up to 48 simultaneous Level IV/V integration efforts.
2. FULL OEDSF SIMULATOR - A full capability OEDSF simulator incorporating all flight unit capabilities and interfaces without the high level of documentation, quality control and ground handling restrictions that pertain to flight hardware and will include non-flight elements that are identical to flight OEDSF elements using non-high reliability parts.
3. PARTIAL OEDSF SIMULATOR - Reduced version of full capability OEDSF simulator with hardware capability and applicable micro code for integration needs. Allows the equivalent of one full simulator configuration to service several users at the same time. This can be effected by supplying the experimenter a limited quantity of OEDSF processing elements with a vestigial control system.

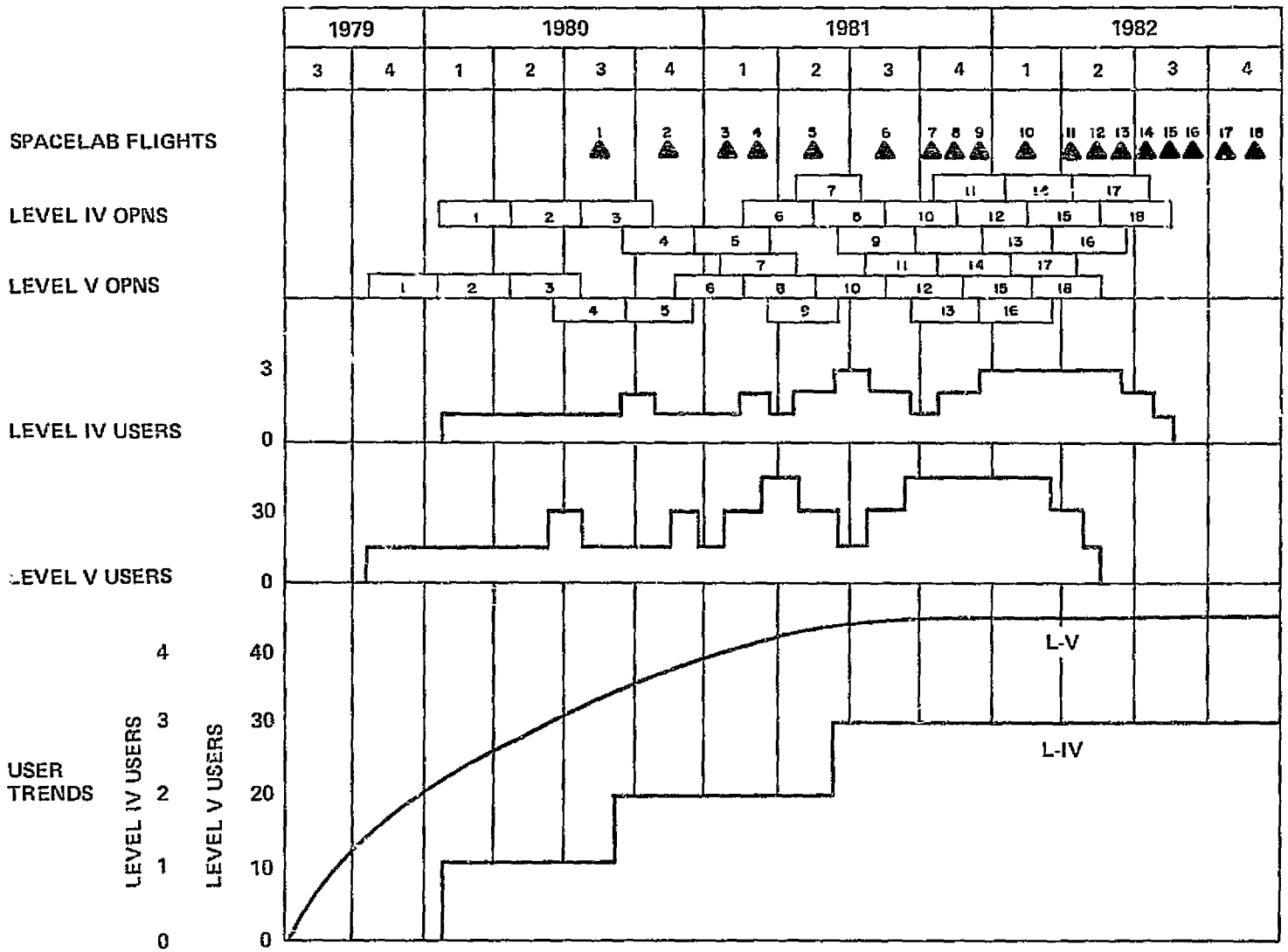

Figure 9-11. User Requirements

Table 9-14. Simulator Alternatives

SPACELAB C&DM SYSTEM	OEDSF
1. Hardware Simulator	1. Flight OEDSF
2. Software Simulator	2. Full Capability Hardware Simulator
3. Characteristics Package	3. Partial Capability Hardware Simulator
	4. Software Simulation
	5. Characteristics Package

OEDSF ALTERNATIVES FOR LEVEL IV/V CHECKOUT

ALT	L-IV	L-V	ALT	L-IV	L-V
1	1	1	9	3	4
2	1	2	10	4	4
3	2	2	11	1	5
4	1	3	12	2	5
5	2	3	13	3	5
6	3	3	14	4	5
7	1	4	15	5	5
8	2	4			

4. SOFTWARE OEDSF SIMULATOR - Software routines adaptable to all identified user computer systems allowing user in-house equipment to simulate OEDSF compatibilities at less than real time speeds. An attractive approach is to develop a translator program which would convert the microcode for the experimenter's own computer. Since the microcode controls a relatively small set of functions this approach is both efficient and inexpensive.

5. OEDSF CHARACTERISTICS PACKAGE . A document consisting of detailed OEDSF operating characteristics and design information sufficient to allow users to model the flight OEDSF on their in-house computer systems.

Each one of these approaches are analyzed for their benefits and costs relative to Level IV and V utilization. The rationale for the individual ratings is provided on the evaluation sheets (Table 9-15 through 9-19). The following values were assigned for individual ratings.

BENEFITS		COSTS	
Excellent	= 4	Very High	= 0
Good	= 3	High	= 1
Fair	= 2	Medium	= 2
Poor	= 1	Low	= 3
Very Poor	= 0	Very Low	= 4

An inverse rating was utilized in cost to allow direct addition of benefit and cost factors.

Criteria

The criteria for evaluation were broken down into two basic areas: Benefits and Costs. Five key areas of benefits were identified to accommodate a broad range of subjective evaluation of the optional approaches. Costs were divided into initial development and continuing level of effort categories to allow for a total cost evaluation. The table below contains the definitions of the evaluation criteria.

EVALUATION CRITERIA DEFINITIONS

BENEFITS

- FIDELITY – Elements of speed and accuracy relative to flight unit capabilities
- SUITABILITY – Capabilities, flexibility and adaptability of the OEDSF Supplied Element relative to Level IV and V integration and test needs
- USABILITY – Constraints, controls and complexities placed on the User by interface requirements of the OEDSF supplied element
- RELIABILITY – Equipment Interaction and Data Interpretation/Precision between User Equipment and OEDSF supplied element
- AVAILABILITY – Relative ease of User access to the OEDSF supplied element concerning transportation, schedule conflicts and/or element sharing constraints

COSTS

- INITIAL
  - HARDWARE – Design, Fab and Production of required OEDSF hardware elements beyond flight req'ts.
  - SOFTWARE – Development, test and certification of required software beyond flight unit needs.
- CONTINUING
  - MAINTENANCE – Costs incurred by upkeep, repair, calibration and test equipment required at User's sites.
- RECONFIGURATION – Costs incurred for hardware/software modifications per user's needs
- SUPPORT – Costs incurred by the OEDSF Program to support OEDSF elements through Logistics, operations, support servicing, and training

RESULTS

The results of comparison of OEDSF alternatives are plotted in Figure 9-12. Highest total scores are received by alternatives utilizing characteristics packages for Level V checkout; this results from the very low costs (to OEDSF) associated with this approach. Highest benefits are shown by alternatives

Table 9-15 OEDSF Integration Concept

Alternate: Flight OEDSF

CRITERIA		LEVEL IV		LEVEL V	
		RATIONALE	RATING	RATIONALE	RATING
BENEFITS	FIDELITY	Perfect - actual flight system used.	4	Same	4
	SUITABILITY	Good - some L-IV subassemblies will need full OEDSF capability	3	Fair - few individual experiments will require full OEDSF capability	2
	USABILITY	Good - actual flight system interfaces with experiment and CDMS; some constraint in using flight unit	3	Same	3
	RELIABILITY	Good - actual flight system provides proven design and performance	3	Same	3
	ACCESSABILITY	Very Poor - limited number of flight units makes L-IV support difficult	0	Very Poor - limited number of flight units makes L-V support impossible	0
	SUB-TOTAL		13		12
COST - INITIAL	HARDWARE	Very High Cost - around $700K per copy	0	Same	0
	SOFTWARE	Low Cost - flight microcode compiler used	3	Same	3
	SUB-TOTAL		3		3
COST - CONTINUOUS	MAINTENANCE	High Cost - high L-IV usage rate of flight unit leads to high maintenance costs	1	Very High Cost - very high L-V usage rate of flight unit leads to very high maintenance costs	0
	RECONFIGURING	Low Cost - minimum reconfiguration required between users	3	Same	3
	SUPPORT	Very High Cost - flight system requires a high degree of logistics, operating support, servicing, & training	0	Same	0
	SUB-TOTAL		4		3
GRAND TOTAL			20		18

Table 9-16 OEDSF Integration Concept

Alternate: Full OEDSF Simulator

CRITERIA		LEVEL IV		LEVEL V	
		RATIONALE	RATING	RATIONALE	RATING
BENEFITS	FIDELITY	Excellent - Speed and accuracy comparable to flight unit	4	Same	4
	SUITABILITY	Good - Some Level IV sub assemblies will need full OEDSF capabilities	3	Fair - Few individual experiments will require full OEDSF capabilities	2
	USABILITY	Good - Simulator Design will be comparable to flight unit	3	Same	3
	RELIABILITY	Good - Simulator emulates proven design & performance of flight unit	3	Same	3
	ACCESSABILITY	Fair - Limited number of full simulators may not satisfy the demand for Level IV requirements	2	Poor - Limited number of full simulators can not satisfy the demand of individual experiment requirements	1
	SUB-TOTAL		15		13
COST - INITIAL	HARDWARE	High Cost - Full simulator approaches cost of flight unit	1	Very High Cost - Many units required to support Level V needs	0
	SOFTWARE	Low Cost - Flight micro code compiler can be used	3	Same	3
	SUB-TOTAL		4		3
COST - CONTINUOUS	MAINTENANCE	Med Cost - Design could incorporate high maintainability factors to accommodate high usage rate	2	Same	2
	RECONFIGURING	Low Cost - Minimum reconfiguration required between users	3	Same	3
	SUPPORT	Med Cost - Full simulator requires high degree of logistics and a lesser degree of operating support, servicing and training	2	Same	2
	SUB-TOTAL		7		7
GRAND TOTAL			26		23

Table 9-17 OEDSF Integration Concept

Alternate: Partial OEDSF Simulator

CRITERIA		LEVEL IV		LEVEL V	
		RATIONALE	RATING	RATIONALE	RATING
BENEFITS	FIDELITY	Good - Speed and accuracy similar to flight unit with limited capability	3	Same	3
	SUITABILITY	Good - Many level IV sub-assemblies will not need full OEDSF capabilities	3	Good - Most individual experiments will not require full OEDSF capabilities	3
	USABILITY	Good - Simulator design comparable to the flight unit with limited capability	3	Same	3
	RELIABILITY	Good - Simulator emulates proven design and performance of flight unit	3	Same	3
	ACCESSABILITY	Good - Availability of partial simulators should satisfy the demand of Level IV requirements	3	Good - Availability of partial simulators should satisfy the demand of individual experiments	3
	SUB-TOTAL		15		15
COST-INITIAL	HARDWARE	High Cost - Large number of partial simulator components may be required	1	Same	1
	SOFTWARE	Low Cost - Flight microcode compiler can be used	3	Same	3
	SUB-TOTAL		4		4
COST - CONTINUOUS	MAINTENANCE	Med Cost - Design could incorporate high maintainability factors to accommodate high usage rate	2	Same	2
	RECONFIGURING	Low Cost - Adaptable to user configuration demands	3	Same	3
	SUPPORT	Med Cost - Partial simulator requires a high degree of logistics and a lesser degree of operating support, servicing and training	2	Same	2
	SUB-TOTAL		7		7
GRAND TOTAL			26		26

Table 9-18 OEDSF Integration Concept

Alternate: Software OEDSF Simulator

CRITERIA		LEVEL IV		LEVEL V	
		RATIONALE	RATING	RATIONALE	RATING
BENEFIT	FIDELITY	Fair - Slower than OEDSF with inevitable reduction in accuracy	2	Same	2
	SUITABILITY	Fair - May not satisfactorily handle processing requirements (speed/accuracy) for Level IV sub-assemblies	2	Good - Maximizes user's in-house hardware	3
	USABILITY	Poor - Complex software must be adapted to a variety of operating systems	1	Same	1
	RELIABILITY	Fair - Subject to user operating system quirks	2	Same	2
	ACCESSABILITY	Good - Duplicate software packages readily produced and distributed	3	Same	3
	SUB-TOTAL		10		11
COST - INITIAL	HARDWARE	Very Low Cost - No hardware required from OEDSF program office	4	Same	4
	SOFTWARE	High Cost - Must be customized to variety of user equipment	1	Same	1
	SUB-TOTAL		5		5
COST - CONTINUOUS	MAINTENANCE	Very Low Cost - Minimal effort after software development	4	Same	4
	RECONFIGURING	Low Cost - Software package handles a variety of check-out tasks	3	Same	3
	SUPPORT	Low Cost - Minimum effort after initial development	3	Same	3
	SUB-TOTAL		10		10
GRAND TOTAL			25		26

Table 9-19. OEDSF Integration Concept

Alternate: OEDSF Characteristics Package

CRITERIA		LEVEL IV		LEVEL V	
		RATIONALE	RATING	RATIONALE	RATING
BENEFITS	FIDELITY	Poor - Speed and accuracy are dependent on resident user's computer and OEDSF character interpretations of user personnel	1	Same	1
	SUITABILITY	Good - Characteristic package is non-user equipment dependent	3	Same	3
	USABILITY	Poor - Requires individual level IV equipment and software interfaces to be established unique to payload element configurations.	1	Very Poor - Requires individual experimenters to interpret characteristics, configure equipment for own use and extensive coordination for higher level integration adaptation.	0
	RELIABILITY	Fair - Level IV personnel, interpretation of characteristics, on-site equipment utilization/operating system design.	2	Poor - Wide variety of experimenter in-house experience, equipment and experimenter requirements.	1
	ACCESSABILITY	Excellent - Maximum utilization of In-House resources and equipment schedule control.	4	Same	4
	SUB-TOTAL		11		9
COST - INITIAL	HARDWARE	Very Low Cost - No hardware required from OEDSF Program Office (Cost burden of User)	4	Same	4
	SOFTWARE	Very Low Cost - Common characteristic package to all Users (Cost burden of User)	4	Same	4
	SUB-TOTAL		8		8
COST - CONTINEOUS	MAINTENANCE	Very Low Cost - No OEDSF Program hardware involved (Cost burden of User)	4	Same	4
	RECONFIGURING	Very Low Cost - Documentation up-dates (Hardware and Software costs burden of User)	4	Same	4
	SUPPORT	Low Costs - Minimum consulting level of effort by EODSF program	3	Same	3
	SUB-TOTAL		11		11
GRAND TOTAL			30		28

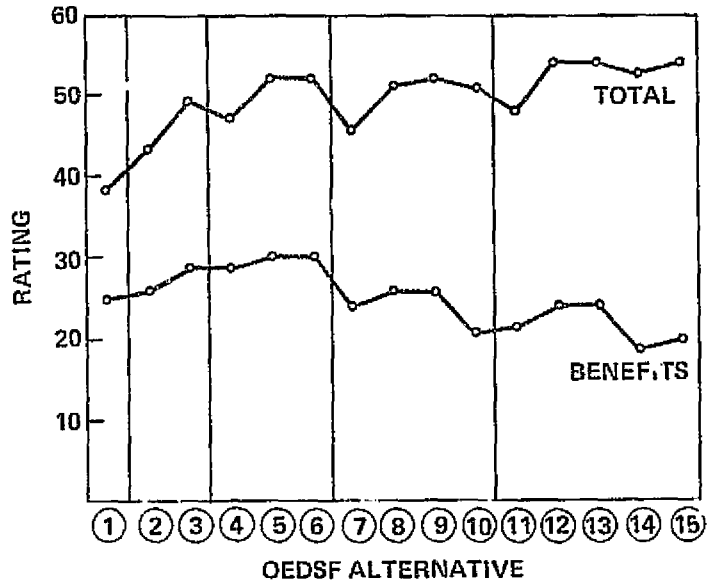

Figure 9-12. OEDSF Alternative

using partial capability hardware simulators for Level V checkout. Total scores for this approach are comparable to those for alternatives using software simulations for Level V checkout and are not far below those of the characteristic package approach. Low total scores and benefits are shown where flight hardware is utilized. The results show a definite cost preference for the characteristic package approach and a benefit preference for hardware simulators.

CONCLUSIONS AND RECOMMENDATIONS

Nearly identical high scores are received by alternatives utilizing hardware simulators, software simulations, and characteristic packages, whereas alternatives using flight hardware score significantly lower. This is due primarily to limited availability of flight units for Level IV/V integration and the high cost of maintaining their flight readiness through extensive ground operations. Hence, the flight hardware alternatives are ruled out, and the field is narrowed to ten choices.

Hardware simulators provide the greatest benefits for integration with the edge to partial capability simulators due to their flexibility. Characteristics packages offer an inexpensive approach from the standpoint of OEDSF but may result in large cost impacts on the users. Software simulations offer an attractive cost/benefit compromise. It appears that any of the remaining alternatives, with the possible exception of full capability hardware simulators for both Level V and Level IV checkout, are viable options.

The problem is that user preferences are not well enough understood to make a clear cut choice between them.

It may well be that a complete spectrum of hardware and software simulations, including characteristics packages, is the answer. This is illustrated in Figure 9-13 where a normal distribution of user integration needs is assumed. Some users require a full capability hardware simulator and some can get by with OEDSF characteristics packages. The majority of users need partial capability hardware simulators (X%, Y%, or Z% of full capability) or can utilize software simulations. The distribution of user requirements (and its variation from Level V to Level IV integration) is not presently known and must be determined.

It is recommended that a more detailed analysis be undertaken to develop firm numbers for user requirements and for simulator costs. Selection of a preferred OEDSF integration support concept should be delayed until this analysis is completed.

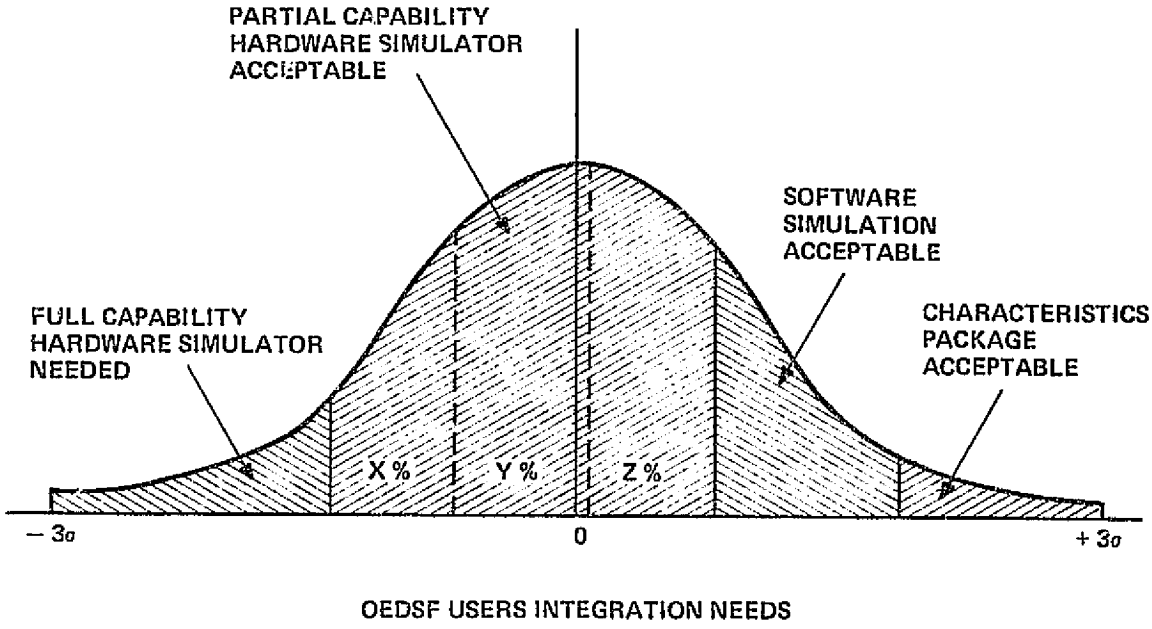

Figure 9-13. OEDSF Users Integration Needs

SECTION 10

RELIABILITY, QUALITY ASSURANCE, AND SAFETY

The design of the OEDSF has been examined and evaluated with respect to its ability to meet the requirements of shuttle flights in the areas of reliability, quality assurance, and safety (R, QA, & S).

The OEDSF, as a standard electronics package represents a well known quantity which presents no challenge in the areas of R, QA, & S. It fits well within the envelope of similar systems developed for manned spaceflight programs such as MOL, Apollo, Skylab, and Apollo-Soyuz. The unique feature of shuttle flights is the seven to fourteen day missions which tend to relax the emphasis on two to three years fault-free reliability and substitute a requirement for maintainability.

The OEDSF, as a central facility utilized by many experiments, must provide reliable operation: A failure of the OEDSF is a mission failure; thus reliability requirements are considerably higher than those on any single instrument. Reliability requirements for shuttle experiment equipments have not been totally defined; however, standard techniques used in previous automated spacecrafts and manned flight programs are a sound baseline subject to modifications tending to reduce these requirements.

During the study effort for the Onboard Experiment Data Support Facility (OEDSF), General Electric Product Assurance assured through evaluation and participation in the design that appropriate parts, materials, materials processes instructions, and controls will be implemented so that the OEDSF processor and power supply reliability is achieved and preserved in the translation from the design to operational hardware. This will be accomplished through a cost effective step by step control of the design effort, establishing proven and controlled Manufacturing and QA practices, reliability predictions, that critical potential failure areas are identified using Failure Mode Effect and Criticality Analysis (FMECA), designing a realistic test program and necessary hardware protection practices.

The major elements of this Product Assurance Program consist of design and development methodologies used to verify that competent engineering practices are followed, parts and materials selection and applications are evaluated for derating factors and dominant failure stresses, evaluation of processing requirements for correct process applications, and ability to inspect and test the OEDSF hardware. Potential suppliers of procured parts and materials may also be evaluated to determine their past performance and assure their ability to meet the OEDSF program requirements.

Evaluation of the conceptual packaging techniques, parts, proposed materials and process instructions and controls were performed. Printed wire circuit boards (PWB) will be processed to existing specifications

by a qualified manufacturer such as Bell Industries. Conformal coating on the PWBs will provide protection against environmental conditions such as humidity and cabin atmosphere and also provide contamination control against foreign particles. Material selections are those GE has used on several space programs in the past such as Nimbus/Landsat, Skylab, and V075.

Quality and Reliability requirements for parts will be similar to the requirements used by GE in procuring parts for Spacelab and tailored to meet the Shuttle requirements.

Process Specification for soldering, bonding, conformal coating etc., which are in place can be used for this program.

Handling and Packaging techniques were evaluated and the existing system is deemed adequate to meet the requirements. Electronic piece parts are carefully controlled. Special Protective packages are used to seal and protect discrete parts until used on the PWB. Electronic shops are equipped with equipment and controlled environments to prevent damaging effects of electrostatic discharge (Benches grounded, wrist straps are provided, plastics with charge carrying properties are not permitted). Fixtures to prevent PWB from warpage and maintain flatness will be used during all operations.

Testing on the PWB and top assembly requirements were also evaluated. The PWBs will be tested before and after conformal coating to assume they function properly prior to installation into the top assembly. The Proto/Qualification unit will be subjected to Vibration, Shock, Thermal/Thermal Vacuum and EMC/EMI environmental testing with functional tests performed after each environment. Flight hardware will be vibration and thermal/thermal vacuum tested.

The reliability tasks and objectives of the OEDSF program were to:

1. Allocate quantitative requirements, predict performance, and eliminate critical effects of failures.
2. Determine the requirements for control of parts, and materials to be selected/qualified for use on this hardware.
3. Determine cost effective and realistic performance and environmental test methods.

System Safety will be an integral part of the total program effort. Safety will be emphasized and safety consideration such as personnel hazards, overloads, energy sources, toxicity of materials, fire suppression, outgassing requirements, and emergency procedures will be evaluated through the use of design safety

analysis and checklists. Potential safety problems will be defined so they may be assessed and resolved to minimize impact to hardware design and cost.

Specific safety engineering tasks were identified such as hazard resolution procedures, guideline documents and checklists, safety requirements for fabrication, handling and test of the hardware, and personnel procedures.

The overall purpose of this Product Assurance Program will be to assure the ability of the end product to accomplish its mission requirements through cost effective design, fabrication, and validation techniques.

SECTION 11

IMPLEMENTATION PLAN

This section addresses the schedule and Work Breakdown Structure associated with the development of the OEDSF. In general it provides a rationale and a roadmap to the development of flight OEDSF hardware. Specifically it is the basis of the cost estimate of the OEDSF.

Two schedules are presented. That shown in Figure 11-1 is patterned after a normal production of flight hardware with some modifications to reflect the requirements of Shuttle flight. As indicated in section 10, these include relaxed requirements on long term reliability, emphasis on maintainability, and compatibility with a manned environment. This schedule envisions the development of a brassboard (or engineering model), a protoflite unit; i.e., a prototype which, following qualification tests is refurbished to qualify as a flight unit, and the production of eight subsequent flight units on two months centers. The schedule is matched against scheduled shuttle flights to indicate possible target flights assuming a July 1977 start.

The schedule shown in Figure 11-2 is based on a phased development of the OEDSF concept. It envisions the fabrication of a concept demonstration unit to prove the validity of the conceptual design, a prototype

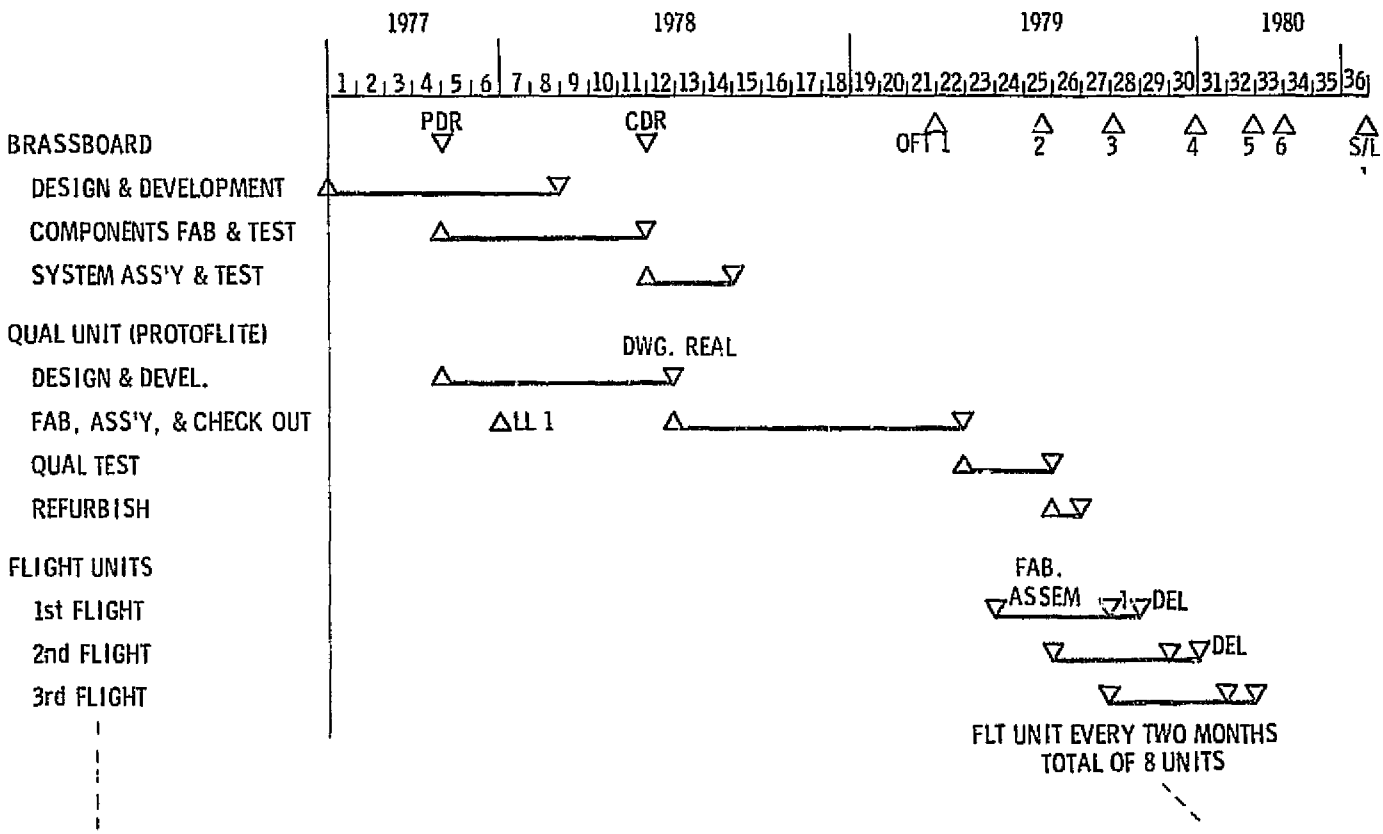

Figure 11-1. Standard Schedule

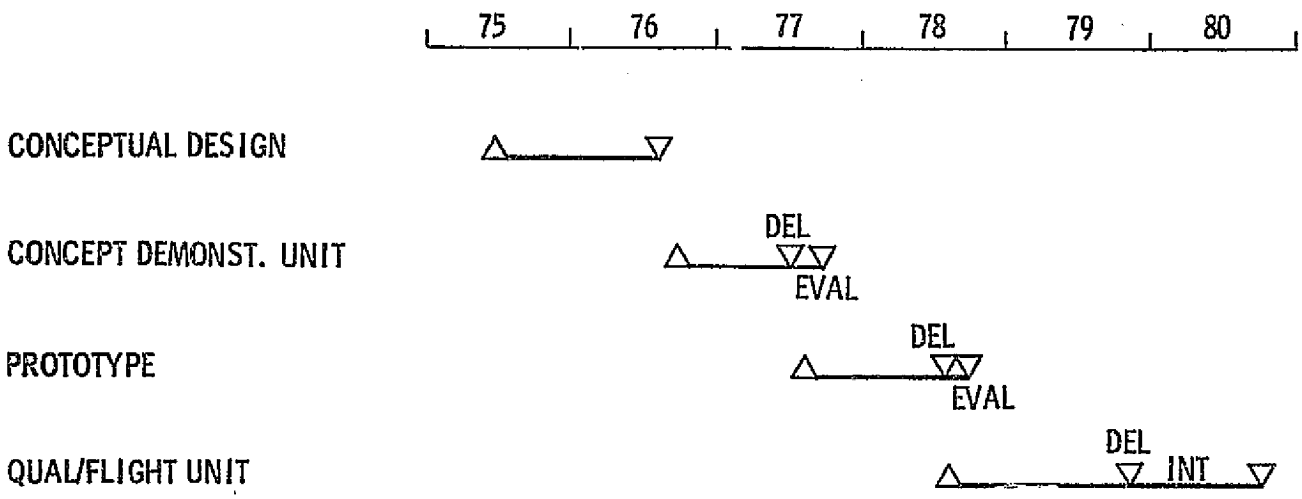

Figure 11-2. Phased Development Schedule

unit, and a qualification unit, followed by flight production units. This approach is somewhat less efficient than the direct development of Figure 11-1 but it provides greater assurance of success because each phase follows only upon the successful demonstration of the previous phase.

Phase I, the conceptual design, is the effort described in this report.

Phase II is the design, fabrication, and evaluation of a "mini-breadboard" facility based on the design concept resulting from Phase I. The breadboard is limited to a rudimentary version with limited software and capacity to service two or three medium data rate sensors simultaneously.

The third phase is the design, fabrication, and evaluation of a full scale prototype OEDSF. This is a mature system configured to meet all the requirements of the conceptual design without, however, meeting the requirements of flight hardware.

Phase IV is the fabrication of the actual flight unit which is subjected to qualification testing, integrated with a complement of payload experiments, and flown to verify its technical and operational performance.

C-3

The development of the Index Generating Program, not shown on these schedules, requires approximately three years and should be scheduled to permit its utilization coincident with the assignment of the OEDSF to payloads consisting of a full set of sensors.

The Work Breakdown Structure (WBS) shown in Figure 11-3 is in accord with the development concept shown in Figure 11-1. The items in the WBS are defined in the following work package descriptions.

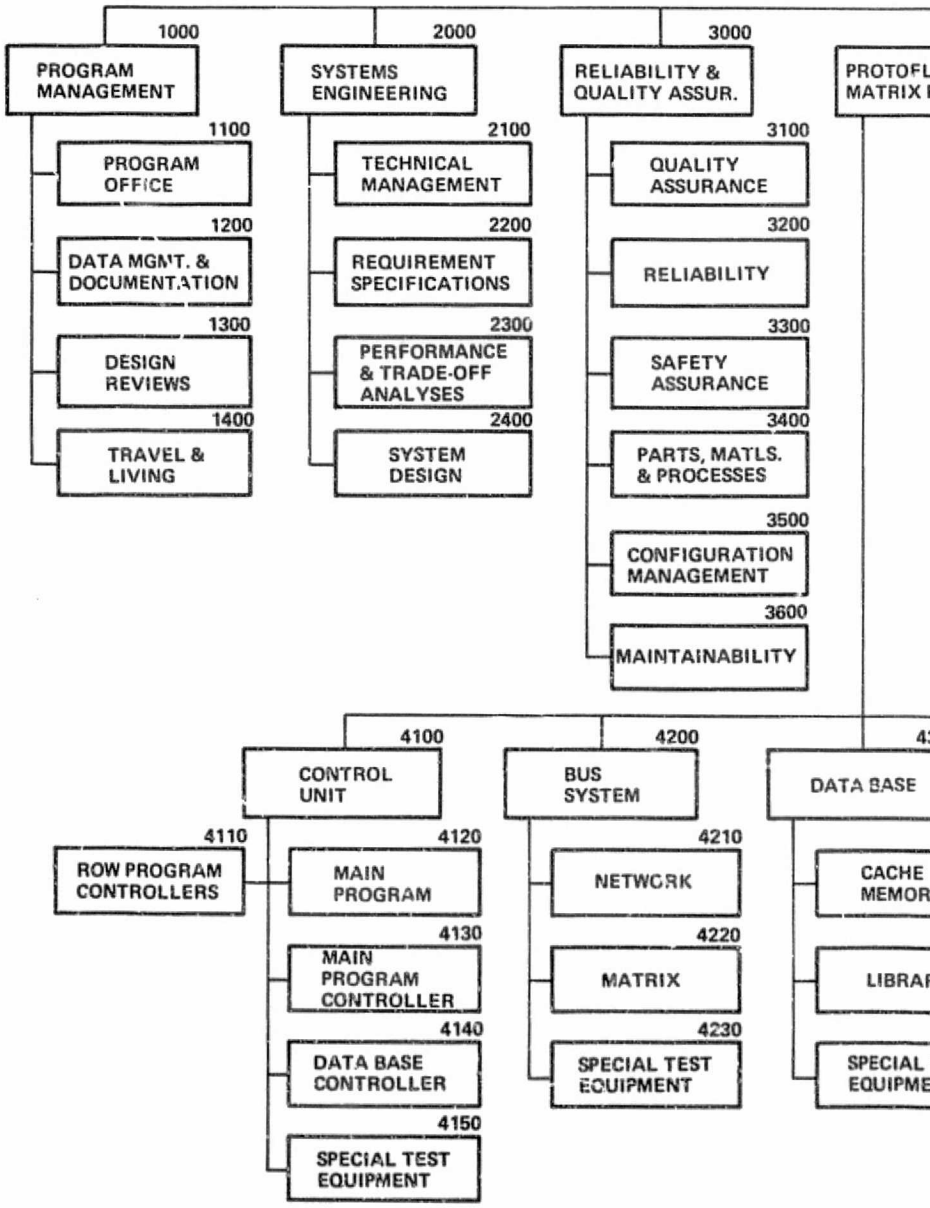

FOLDOUT FRAME 1

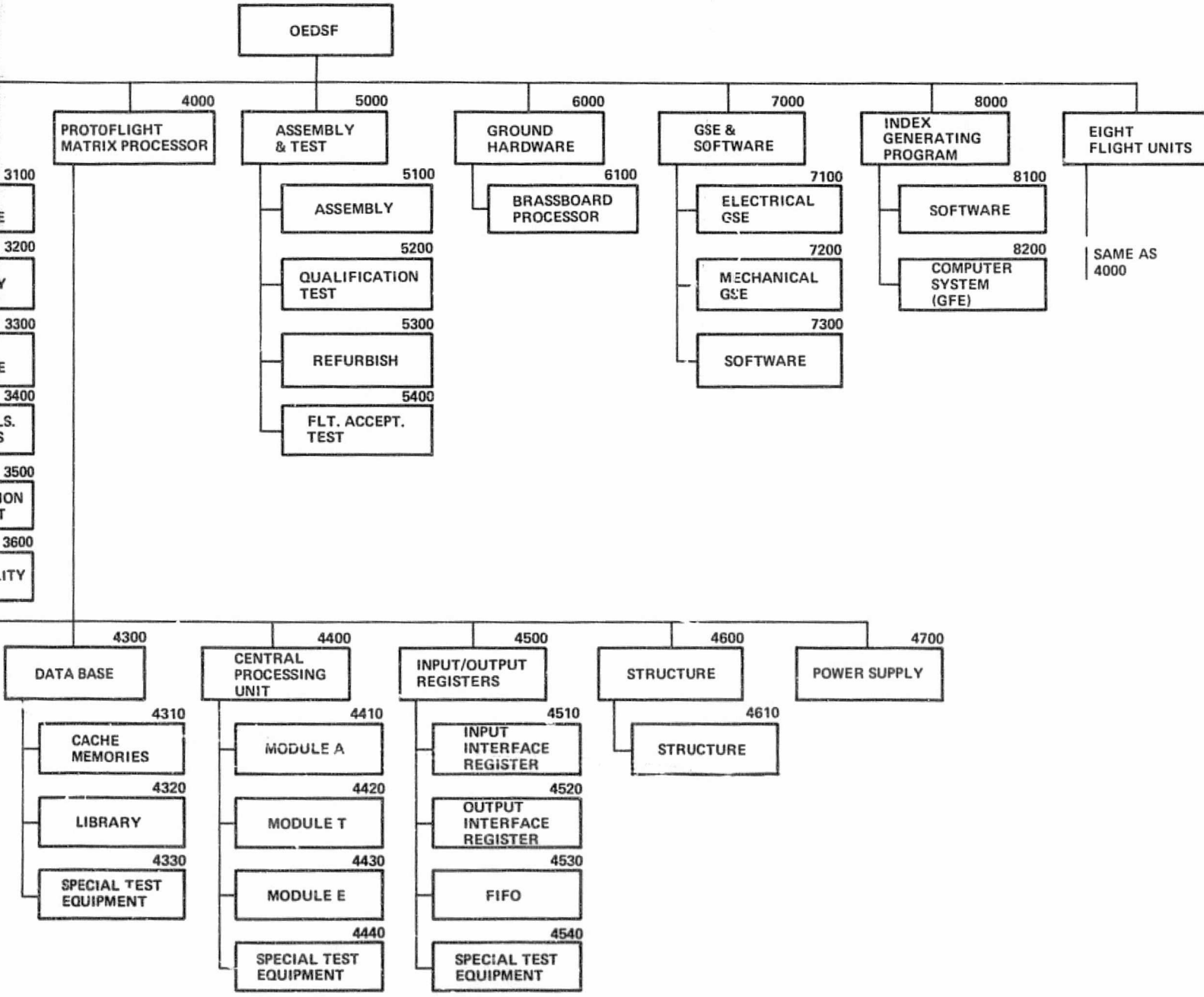

Figure 11-3. OEDSF Work Breakdown Structur

FOLDOUT FRAME 2

REPRODUCIBILITY OF THE ORIGINAL PAGE IS POOR

WORK PACKAGE DESCRIPTION FOR COSTING

WORK PACKAGE: 1100 PROGRAM OFFICE

WBS NO.	TASK	APP. TO FLT UNIT	PERFORMANCE OPERATIONS				
			PROGRAM OFFICE	TECH OPS	MFG.	QA	
1110	Provide top-level direction and integration of required program activities.(Limited to applied time of program manager and his secretary)						
1120	Develop and maintain the top level plan for program implementation.						
	Conduct budget planning and control activities required for program cost control.						
	Conduct schedule planning and control activities required for program schedule control, in-house and customer.						
	Prepare status reports and presentations required for program management, in-house and customer.						
	Prepare contract change proposals as appropriate.						
1130	Conduct contract administration activities required for program implementation.(Limited to applied time of contract administrator and his secretary).						
1140	Provide finance support required for program implementation.						
1150	Provide staff support to Program Manager with respect to manufacturing activities.						
	Initiate and integrate required manufacturing activities.						
	Develop and maintain the top level Manufacturing Plan.						
	Develop and maintain the Make-or-Buy Plan.						
	Develop and maintain Handling and Storage Plan.						

WORK PACKAGE: 1200 DATA MANAGEMENT & DOCUMENTATION

WBS NO.	TASK	APP. TO FLT UNIT	PERFORMANCE OPERATIONS				
			PROGRAM OFFICE	TECH OPS	MFG.	QA	
1210	Develop and operate a data management system to provide to the customer the data items specified in the CDRL. Identify data item requirements, and initiate activities required to provide these data items in specified format (Drawings, user manual, acceptance test procedures, etc.). Integrate and initiate review and approval of each data item, in-house and customer, when required. Initiate and integrate Tech Pubs and Graphic Arts activities to provide the data items for submittal to the customer.						
1220	Provide Tech Pubs and Graphic Arts services as requested by Program Office.						

WORK PACKAGE DESCRIPTION FOR COSTING

WORK PACKAGE: 1300 DESIGN REVIEWS

WBS NO.	TASK	APP. TO FLT UNIT	PERFORMANCE OPERATIONS			
			PROGRAM OFFICE	TECH OPS	MFG.	QA
1310	Conduct program-level design reviews required by the contract, as follows: Preliminary Design Review (PDR) Control Design Review (CDR) Pre-Environmental Test Review Qualification/Acceptance Review					

WORK PACKAGE DESCRIPTION FOR COSTING

WORK PACKAGE: 1400 TRAVEL & LIVING

WBS NO.	TASK	APP. TO FLT UNIT	PERFORMANCE OPERATIONS				
			PROGRAM OPERTOR	TECH OPS	MFG.	QA	
1410	All travel and living charges authorized for program implementation shall be included in this Work Package.						

REPRODUCIBILITY OF THE ORIGINAL PAGE IS POOR

WORK PACKAGE DESCRIPTION FOR COSTING

WORK PACKAGE: 2100 TECHNICAL MANAGEMENT

WBS NO.	TASK	APP. TO FLT UNIT	PERFORMANCE OPERATIONS				
			PROGRAM OFFICE	TECH OPS	MFG.	QA	
2110	Provide staff support to Program Manager with respect to technical matters. Initiate and integrate required technical activities. Prepare and conduct internal design reviews.						

WORK PACKAGE DESCRIPTION FOR COSTING

WORK PACKAGE: 2200 REQUIREMENT SPECIFICATIONS

WBS NO.	TASK	APP. TO FLT UNIT	PERFORMANCE OPERATIONS				
			PROGRAM OFFICE	TECH OPS	MFG.	QA	
2210	Augment and clarify customer-furnished module design and test requirement specifications as necessary for program implementation. Develop design and test requirement specifications for each in-house and subcontracted component. Develop interface requirements for GFR components.						

WORK PACKAGE DESCRIPTION FOR COSTING

WORK PACKAGE: 2300 PERFORMANCE & TRADE-OFFS ANALYSES

WBS NO.	TASK	APP. TO FLT UNIT	PERFORMANCE OPERATIONS			
			PROGRAM OFFICE	TECH OPS	MFG.	QA
2310	Perform functional performance analyses and trade-off studies necessary to establish the system functional configuration. The specific analyses and studies to be performed include: -Test Program Analysis (for LSI's) -Timing Analysis -I/O Analysis -Power Supply/Temperature Check -Reliability Analyses (e.g. Redundancy FMECA) -Performance Analyses -Requirements Analyses					

WORK PACKAGE DESCRIPTION FOR COSTING

WORK PACKAGE: 2400 SYSTEM DESIGN

WBS NO.	TASK	APP. TO FLT UNIT	PERFORMANCE OPERATIONS			
			PROGRAM OFFICE	TECH OPS	MFG.	QA
2410	Conduct design activities necessary to establish the electronic/mechanical/thermal system level design of the OEDSF. Prepare block diagrams, schematics and final assembly of the module. Design and build a typical assembled printed circuit board and subject it to vibration tests at levels comparable to those it will experience in the assembled subsystem.					

REPRODUCIBILITY OF THE ORIGINAL PAGE IS POOR

WORK PACKAGE DESCRIPTION FOR COSTING

WORK PACKAGE: 3100 QUALITY ASSURANCE

WBS NO.	TASK	APP. TO FLT UNIT	PERFORMANCE OPERATIONS			
			PROGRAM OFFICE	TECH OPS	MFG	QA
3110	Provide staff support to Program Manager with respect to quality assurance matters. Initiate and integrate required quality assurance activities.					
3120	Develop and maintain Quality Assurance and Inspection Plan.					
3130	Develop and maintain a cleanliness Control Plan.					
3140	Develop and maintain control paln.					
3150	Develop and maintain Safety Plan.					
3160	Develop and Maintain General Test Plan.					
3170	Establish and operate a Material Review Board for non-conformance control.					
3180	Conduct failure reporting and analysis activities in accordance with established practices.					
3190	Establish and operate a Material Review Board.					
31A0	Perform process control activities.					
31B0	Perform vendor quality assurance activities.					
31C0	Perform material coding and inspection activities.					
31D0	Perform material acceptance activities 100.					

WORK PACKAGE DESCRIPTION FOR COSTING

WORK PACKAGE: 3200 RELIABILITY

WBS NO.	TASK	APP. TO FLT UNIT	PERFORMANCE OPERATIONS				
			PROGRAM OFFICE	TECH OPS	MFG.	QA	
3210	Provide staff support to Program Manager with respect to reliability assurance matters. Initiate and integrate required reliability assurance activities.						
3220	Develop and maintain a Reliability Program Plan.						

REPRODUCIBILITY OF THE ORIGINAL PAGE IS POOR

WORK PACKAGE DESCRIPTION FOR COSTING

WORK PACKAGE: 3300 SAFETY ASSURANCE

WBS NO.	TASK	APP. TO FLT UNIT	PERFORMANCE OPERATIONS			
			PROGRAM OFFICE	TECH OPS	MFG.	QA
3310	Develop and maintain a Safety Plan.					

WORK PACKAGE DESCRIPTION FOR COSTING

WORK PACKAGE: 3400 PARTS, MATERIALS & PROCESSES

WBS NO.	TASK	APP. TO FLT UNIT	PERFORMANCE OPERATIONS				
			PROGRAM OFFICE	TECH OPS	MFG.	QA	
3410	Develop and maintain a parts, materials and processes plan. Direct and integrate required Parts Program activities.						
3420	Establish and maintain lists of parts authorized for program use, including standard and non-standard parts.						
	Establish derating factors, as appropriate.						
	Prepared controlled procurement specifications for all parts authorized for use in flight hardware.						
3430	Conduct all activities necessary to obtain qualification for each non-qualified part authorized for use in flight hardware.						
3440	Conduct part inspection, screening and burn-in activities, as required by the approved Parts & material Plan.						
3450	Establish procedures for non-standard part control.						
	Conduct activities necessary for non-standard part control, in accordance with approved procedures.						

WORK PACKAGE DESCRIPTION FOR COSTING

WORK PACKAGE: 3500 CONFIGURATION MANAGEMENT

WBS NO.	TASK	APP. TO FLT UNIT	PERFORMANCE OPERATIONS			
			PROGRAM OFFICE	TECH OPS	MFG.	QA
3510	Develop and maintain a Configuration Management Plan, including CCB procedures and operations. Conduct configuration management operations in accordance with the approved Configuration Management Plan.					

WORK PACKAGE DESCRIPTION FOR COSTING

WORK PACKAGE: 3600 MAINTAINABILITY

WBS NO.	TASK	APP. TO FLT UNIT	PERFORMANCE OPERATIONS				
			PROGRAM OFFICE	TECH OPS	MFG.	QA	
	Establish maintainability requirements. Perform analyses to verify that maintainability requirements are met on the design of the protoflight subsystem.						

WORK PACKAGE DESCRIPTION FOR COSTING

WORK PACKAGE: 4110 ROW PROGRAM CONTROLLERS

WBS NO.	TASK	APP. TO FLT UNIT	PERFORMANCE OPERATIONS				
			PROGRAM OFFICE	TECH OPS	MFG	QA	
4111	DESIGN & DEVELOPMENT -Perform functional performance analyses and trade-off studies to establish the component functional configuration. -Conduct breadboard evaluation necessary to establish functional configuration. -Conduct design activities necessary to establish the component mechanical-thermal configuration. -Conduct manufacturing planning for protoflight model and for two(2) ground models. -Conduct quality control planning for protoflight model and for two(2) ground models. -Conduct necessary process development and establish process controls. -Develop test plans and procedures for component test. -Prepare drawings and specifications for production of protoflight hardware.						
4112	FABRICATION & TEST -Fabricate protoflight component - -Conduct component test of protoflight component in accordance with test plans and procedures previously developed. -Prepare required test documentation. -Perform handling and storage activities in accordance with the Handling and Storage Plan.						

WORK PACKAGE DESCRIPTION FOR COSTING

WORK PACKAGE: 4120 MAIN PROGRAM

WBS NO.	TASK	APP. TO FLT UNIT	PERFORMANCE OPERATIONS				
			PROGRAM OFFICE	TECH OPS	MFG	QA	
4121	DESIGN & DEVELOPMENT -Perform functional performance analyses and trade-off studies to establish the component functional configuration. -Conduct breadboard evaluation necessary to establish functional configuration. -Conduct design activities necessary to establish the component mechanical/thermal configuration. -Conduct manufacturing planning for brassboard and protoflight models. -Conduct necessary process development and establish process controls. -Develop test plans and procedures for component test - acceptance and qualification. -Prepare drawings and specifications for production of protoflight hardware.						
4122	FABRICATION & TEST -Produce protoflight component -Provide necessary tools, and fixture -Conduct component test of protoflight component in accordance with test plans and procedures previously developed. -Prepare required test documentation.						

WORK PACKAGE DESCRIPTION FOR COSTING

WORK PACKAGE: 4130 MAIN PROGRAM CONTROLLER

WBS NO.	TASK	APP. TO FLT UNIT	PERFORMANCE OPERATIONS				
			PROGRAM OFFICE	TECH OPS	MFG.	QA	
4131	DESIGN & DEVELOPMENT -Perform functional performance analyses and trade-off studies to establish the component functional configuration. -Conduct breadboard evaluation necessary to establish functional configuration. -Conduct design activities necessary to establish the component mechanical/thermal configuration. -Conduct manufacturing planning for protoflight model and for two(2) ground models. -Conduct quality control planning for protoflight model and for two(2) ground models. -Conduct necessary process development and establish process controls. -Develop test plans and procedures for component test. -Prepare drawings and specifications for production of protoflight hardware.						
4132	FABRICATION & TEST -Fabricate protoflight component -Conduct component test of protoflight component in accordance with test plans and procedures previously developed. -Prepare required test documentation. -Perform handling and storage activities in accordance with the Handling and Storage Plan.						

WORK PACKAGE DESCRIPTION FOR COSTING

WORK PACKAGE: 4140 DATA BASE CONTROLLER

WBS NO.	TASK	APP. TO FLT UNIT	PERFORMANCE OPERATIONS				
			PROGRAM OFFICE	TECH OPS	MFG.	QA	
4141	DESIGN & DEVELOPMENT -Perform functional performance analysis and trade-off studies to establish the component functional configuration. -Conduct breadboard evaluation necessary to establish functional configuration. -Conduct design activities necessary to establish the component mechanical/thermal configuration. -Conduct manufacturing planning for protoflight model and for two(2) ground models. -Conduct quality control planning for protoflight model and for two(2) ground models. -Conduct necessary process development and establish process controls. -Develop test plans and procedures for component test. -Prepare drawings and specifications for production of protoflight hardware.						
4142	FABRICATION & TEST -Fabricate protoflight component -Conduct component test of protoflight component in accordance with test plans and procedures previously developed. -Prepare required test documentation. -Perform handling and storage activities in accordance with the Handling and Storage Plan.						

REPRODUCIBILITY OF THE ORIGINAL PAGE IS POOR

WORK PACKAGE DESCRIPTION FOR COSTING

WORK PACKAGE: 4150 SPECIAL TEST EQUIPMENT

WBS NO.	TASK	APP. TO FLT UNIT	PERFORMANCE OPERATIONS			
			PROGRAM OFFICE	TECH OPS	MFG	QA
4151	Design, procure, fabricate and check-out required special test equipment.					

WORK PACKAGE DESCRIPTION FOR COSTING

WORK PACKAGE: 4210 NETWORK

WBS NO.	TASK	APP. TO FLT UNIT	PERFORMANCE OPERATIONS			
			PROGRAM OFFICE	TECH OPS	MFG.	QA
4 211	DESIGN & DEVELOPMENT -Perform functional performance analysis and trade-off studies to establish the component functional configuration. -Conduct breadboard evaluation necessary to establish functional configuration. -Conduct design activities necessary to establish the component mechanical/thermal configuration. -Conduct manufacturing planning for protoflight model and for two(2) ground models. -Conduct quality control planning for protoflight model and for two (2) ground models. -Conduct necessary process development and establish process controls. -Develop test plans and procedures for component test. -Prepare drawings and specifications for production of protoflight hardware.					
4212	FABRICATION & TEST -Fabricate protoflight component -Conduct component test of protoflight component in accordance with test plans and procedures previously developed. -Prepare required test documentation. -Performance handling and storage activities in accordance with the Handling and Storage Plan.					

WORK PACKAGE DESCRIPTION FOR COSTING

WORK PACKAGE: 4220 MATRIX

WBS NO.	TASK	APP. TO FLT UNIT	PERFORMANCE OPERATIONS			
			PROGRAM OFFICE	TECH OPS	MFG	QA
4221	DESIGN & DEVELOPMENT -Perform functional performance analysis and trade-off studies to establish the component functional configuration. -Conduct design activities necessary to establish the component mechanical/thermal configuration. -Conduct manufacturing planning for protoflight model and for two (2) ground models. -Conduct quality control planning for protoflight model and for two (2) ground models. -Conduct necessary process development and establish process controls. -Develop test plans and procedures for component test. -Prepare drawings and specifications for production of protoflight hardware.					
4222	FABRICATION & TEST -Fabricate protoflight component -Conduct component test of protoflight component in accordance with test plans and procedures previously developed. -Prepare required test documentation. -Perform handling and storage activities in accordance with the Handling and Storage Plan.					

WORK PACKAGE DESCRIPTION FOR COSTING

WORK PACKAGE: 4230 SPECIAL TEST EQUIPMENT

WBS NO.	TASK	APP. TO FLT UNIT	PERFORMANCE OPERATIONS				
			PROGRAM OFFICE	TECH OPS	MFG.	QA	
42 31	Design, procure, fabricate and check-out required special test equipment.						

WORK PACKAGE DESCRIPTION FOR COSTING

WORK PACKAGE: 4310 CACHE MEMORIES

WBS NO.	TASK	APP. TO FLT UNIT	PERFORMANCE OPERATIONS			
			PROGRAM OFFICE	TECH OPS	MFG.	QA
4311	DESIGN & DEVELOPMENT -Perform functional performance analysis and trade-off studies to establish the component functional configuration. -Conduct breadboard evaluation necessary to establish functional configuration. -Conduct design activities necessary to establish the component mechanical/thermal configuration. -Conduct manufacturing planning for protoflight model and for two (2) ground models. -Conduct necessary process development and establish process controls. -Develop test plans and procedures for component test. -Prepare drawings and specifications for production of protoflight hardware.					
4312	FABRICATION & TEST -Fabricate protoflight component -Conduct component test of protoflight component in accordance with test plans and procedures previously developed. -Prepare required test documentation. -Perform handling and storage activities in accordance with the Handling and Storage Plan.					

WORK PACKAGE DESCRIPTION FOR COSTING

WORK PACKAGE: 4320 LIBRARY

WBS NO.	TASK	APP. TO FLT UNIT	PERFORMANCE OPERATIONS				
			PROGRAM OFFICE	TECH OPS	MFG.	QA	
4321	DESIGN & DEVELOPMENT -Perform functional performance analysis and trade-off studies to establish the component functional configuration. -Conduct breadboard evaluation necessary to establish functional configuration. -Conduct design activities necessary to establish the component mechanical/thermal configuration. -Conduct manufacturing planning for protoflight model and for two (2) ground models. -Conduct quality control planning for protoflight model and for two (2) ground models. -Conduct necessary process development and establish process controls. -Develop test plans and procedures for component test. -Prepare drawings and specifications for production of protoflight hardware.						
4322	FABRICATION & TEST -Fabricate protoflight component -Conduct component test of protoflight component in accordance with test plans and procedures previously developed. -Prepare required test documentation. -Perform handling and storage activities in accordance with the Handling and Storage Plan.						

REPRODUCIBILITY OF THE ORIGINAL PAGE IS POOR

WORK PACKAGE DESCRIPTION FOR COSTING

WORK PACKAGE: 4330 SPECIAL TEST EQUIPMENT

WBS NO.	TASK	APP. TO FLT UNIT	PERFORMANCE OPERATIONS			
			PROGRAM OFFICE	TECH OPS	MFG.	QA
4341	Design, procure, fabricate and check-out required special test equipment.					

WORK PACKAGE DESCRIPTION FOR COSTING

WORK PACKAGE: 4410 MODULE A

WBS NO.	TASK	APP. TO FLT UNIT	PERFORMANCE OPERATIONS				
			PROGRAM OFFICE	TECH OPS	MFG.	QA	
4411	DESIGN & DEVELOPMENT -Perform functional performance analysis and trade-off studies to establish the component functional configuration. -Conduct breadboard evaluation necessary to establish functional configuration. -Conduct design activities necessary to establish the component mechanical/thermal configuration. -Conduct manufacturing planning for protoflight model and for two (2) ground models. -Conduct necessary process development and establish process controls. -Develop test plans and procedures for component test. -Prepare drawings and specifications for production of protoflight hardware.						
4412	FABRICATION & TEST -Fabricate protoflight component -Conduct component test of protoflight component in accordance with test plans and procedures previously developed. -Prepare required test documentation. -Perform handling and storage activities in accordance with the Handling and Storage Plan.						

WORK PACKAGE DESCRIPTION FOR COSTING

WORK PACKAGE: 4420 MODULE T

WBS NO.	TASK	APP. TO FLT UNIT	PERFORMANCE OPERATIONS				
			PROGRAM OFFICE	TECH OPS	MFG.	QA	
4421	DESIGN & DEVELOPMENT						
	-Perform functional performance analysis and trade-off studies to establish the component functional configuraion.						
	-Conduct breadboard evaluation necessary to establish functional configuration.						
	-Conduct design activities necessary to establish the component mechanical/thermal configuration.						
	-Conduct manufacturing planning for protoflight model and for two (2) ground models.						
	-Conduct quality control planning for protoflight model and for two (2) ground models.						
	-Conduct necessary process development and establish process controls.						
	-Develop test plans and procedures for component test.						
	-Prepare drawings and specifications for production of protoflight hardware.						
4422	FABRICATION & TEST						
	-Fabricate protoflight component						
	-Conduct component test of protoflight component in accordance with test plans and procedures previously developed.						
	-Prepare required test documentation.						
	-Preform handling and storage activities in accordance with the Handling and Storage Plan.						

WORK PACKAGE DESCRIPTION FOR COSTING

WORK PACKAGE: 4430 MODULE E

WBS NO.	TASK	APP. TO FLT UNIT	PERFORMANCE OPERATIONS				
			PROGRAM OFFICE	TECH OPS	MFG.	QA	
4431	DESIGN & DEVELOPMENT						
	-Perform functional performance analysis and trade-off studies to establish the component functional configuration.						
	-Conduct breadboard evaluation necessary to establish functional configuration.						
	-Conduct design activities necessary to establish the component mechanical/thermal configuration.						
	-Conduct manufacturing planning for protoflight model and for two (2) ground models.						
	-Conduct quality control planning for protoflight model and for two (2) ground models.						
	-Conduct necessary process development and establish process controls.						
	-Develop test plans and procedures for component test.						
	-Prepare drawings and specifications for production of protoflight hardware.						
4432	FABRICATION & TEST						
	-Fabricate protoflight component						
	-Conduct component test of protoflight component in accordance with test plans and procedures previously developed.						
	-Prepare required test documentation.						
	-Perform handling and storage activities in accordance with the Handling and Storage Plan.						

WORK PACKAGE DESCRIPTION FOR COSTING

WORK PACKAGE: 4440 SPECIAL TEST EQUIPMENT

WBS NO.	TASK	APP. TO FLT UNIT	PERFORMANCE OPERATIONS				
			PROGRAM OFFICE	TECH OPS	MFG.	QA	
4441	Design, procure, fabricate and check-out required special test equipment.						

WORK PACKAGE DESCRIPTION FOR COSTING

WORK PACKAGE: 4510 INPUT INTERFACE REGISTER

WBS NO.	TASK	APP. TO FLT UNIT	PERFORMANCE OPERATIONS				
			PROGRAM OFFICE	TECH OPS	MFG.	QA	
4511	DESIGN & DEVELOPMENT -Perform functional performance analysis and trade-off studies to establish the component functional configuration. -Conduct breadboard evaluation necessary to establish functional configuration. -Conduct design activities necessary to establish the component mechanical/thermal configuration. -Conduct manufacturing planning for protoflight model and for two (2) ground models. -Conduct necessary process development and establish process controls. -Develop test plans and procedures for component test. -Prepare drawings and specifications for production of protoflight hardware.						
4512	FABRICATION & TEST -Fabricate protoflight component -Conduct component test of protoflight component in accordance with test plans and procedures previously developed. -Prepare required test documentation. -Perform handling and storage activities in accordance with the Handling and Storage Plan.						

REPRODUCIBILITY OF THE ORIGINAL PAGE IS POOR

WORK PACKAGE DESCRIPTION FOR COSTING

WORK PACKAGE: 4520 OUTPUT INTERFACE REGISTER

WBS NO.	TASK	APP. TO FLT UNIT	PERFORMANCE OPERATIONS				
			PROGRAM OFFICE	TECH OPS	MFG.	QA	
4521	DESIGN & DEVELOPMENT -Perform functional performance analysis and trade-off studies to establish the component functional configuration. -Conduct breadboard evaluation necessary to establish functional configuration. -Conduct design activities necessary to establish the component mechanical/thermal configuratinn. -Conduct manufacturing planning for protoflight model and for two (2) ground models. -Conduct quality control planning for protoflight model and for two (2) ground models. -Conduct necessary process development and establish process controls. -Develop test plans and procedures for component test. -Prepare drawings and specifications for production of protoflight hardware.						
4522	FABRICATION & TEST -Fabricate protoflight component -Conduct component test of protoflight component in accordance with test plans and procedures previously developed. -Prepare required test documentation. -Perform handling and storage activities in accordance with the Handling and Storage Plan.						

WORK PACKAGE DESCRIPTION FOR COSTING

WORK PACKAGE: 4530 FIFO

WBS NO.	TASK	APP. TO FLT UNIT	PERFORMANCE OPERATIONS			
			PROGRAM OFFICE	TECH OPS	MFG.	QA
4331	DESIGN & DEVELOPMENT -Perform functional performance analysis and trade-off studies to establish the component functional configuration. -Conduct breadboard evaluation necessary to establish functional configuration. -Conduct design activities necessary to establish the component mechanical/thermal configuration. -Conduct manufacturing planning for protoflight model and for two (2) ground models. -Conduct quality control planning for protoflight model and for two (2) ground models. -Conduct necessary process development and establish process controls. -Develop test plans and procedures for component test. -Prepare drawings and specifications for production of protoflight hardware.					
4332	FABRICATION & TEST -Fabricate protoflight component -Conduct component test of protoflight component in accordance with test plans and procedures previously developed. -Prepare required test documentation. -Perform handling and storage activities in accordance with the Handling and Storage Plan.					

WORK PACKAGE DESCRIPTION FOR COSTING

WORK PACKAGE: 4540 SPECIAL TEST EQUIPMENT

WBS NO.	TASK	APP. TO FLT UNIT	PERFORMANCE OPERATIONS				
			PROGRAM OFFICE	TECH OPS	MFG.	QA	
4531	Design, procure, fabricate and check-out required special test equipment.						

WORK PACKAGE DESCRIPTION FOR COSTING

WORK PACKAGE: 4610 STRUCTURE

WBS NO.	TASK	APP. TO FLT UNIT	PERFORMANCE OPERATIONS				
			PROGRAM OFFICE	TECH OPS	MFG.	QA	
4621	DESIGN UPDATE -Modify drawings and specifications, manufacturing/quality control planning, and test plans/procedures to incorporate changes necessitated by engineering model tests.						
4622	FABRICATION -Produce protoflight model						

WORK PACKAGE DESCRIPTION FOR COSTING

WORK PACKAGE: 5100 ASSEMBLY

WBS NO.	TASK	APP. TO FLT UNIT	PERFORMANCE OPERATIONS				
			PROGRAM OFFICE	TECH OPS	MFG.	QA	
5110	Assemble Matrix Processor components, structure and wiring.						

WORK PACKAGE DESCRIPTION FOR COSTING

WORK PACKAGE: 5200 QUALIFICATION TEST

WBS NO.	TASK	APP. TO FLT UNIT	PERFORMANCE OPERATIONS				
			PROGRAM OFFICE	TECH OPS	MFG.	QA	
5210	Prepare qualification test plans and procedures.						
---	Perform qualification test operations on final configuration of the Protoflight Matrix Processor.	------					
	Evaluate qualification test data.						
	Prepare test documentation for performance acceptance by the customer.						

REPRODUCIBILITY OF THE ORIGINAL PAGE IS POOR

WORK PACKAGE DESCRIPTION FOR COSTING

WORK PACKAGE: 5300 REFURBISH

WBS NO.	TASK	APP. TO FLT UNIT	PERFORMANCE OPERATIONS				
			PROGRAM OFFICE	TECH OPS	MFG.	QA	
5 310	Refurbish the Protoflight Matrix Processor as required to put the equipment in flight condition.						

WORK PACKAGE DESCRIPTION FOR COSTING

WORK PACKAGE: 5400 FLIGHT ACCEPTANCE TEST

WBS NO.	TASK	APP. TO FLT UNIT	PERFORMANCE OPERATIONS				
			PROGRAM OFFICE	TECH OPS	MFG.	QA	
5410	Prepare flight acceptance test plans and procedure:						
	Conduct flight acceptance test operations on the refurbished protoflight Matrix Processor.						
	Evaluate test data and prepare acceptance test documentation.						
	Pack, box and ship						

REPRODUCIBILITY OF THE ORIGINAL PAGE IS POOR

WORK PACKAGE DESCRIPTION FOR COSTING

WORK PACKAGE: 6100 MATRIX PROCESSOR BRASSBOARD

WBS NO.	TASK	APP. TO FLT UNIT	PERFORMANCE OPERATIONS				
			PROGRAM OFFICE	TECH OPS	MFG.	QA	
	1. Repeat Work Packages 4100, 4200, 4300, 4400 and 4500, except use commercial parts.						
	2. Repeat ~~Work Package 4610 to~~ fit brassboard packaging concept.						
	3. Perform assembly and acceptance test in accordance with work packages 5100. As modified for brassboard concept.						

WORK PACKAGE DESCRIPTION FOR COSTING

WORK PACKAGE: 7100 ELECTRICAL GSE

WBS NO.	TASK	APP. TO FLT UNIT	PERFORMANCE OPERATIONS				
			PROGRAM OFFICE	TECH OPS	MFG.	QA	
7110	DESIGN & DEVELOPMENT						
	-Develop design and performance requirements for Electrical GSE						
	-Perform design activities to produce production drawings and specifications.						
7120	FABRICATION & TEST						
	-Produce Electrical GSE equipment						
	-Conduct test on equipment						
	-Pack, box and ship						

WORK PACKAGE DESCRIPTION FOR COSTING

WORK PACKAGE: 7200 MECHANICAL GSE

WBS NO.	TASK	APP. TO FLT UNIT	PERFORMANCE OPERATIONS				
			PROGRAM OFFICE	TECH OPS	MFG.	QA	
7210	DESIGN & DEVELOPMENT						
	-Develop design and performance requirements for Mechanical GSE						
	-Perform design activities to produce production drawings and specification.						
7220	FABRICATION & TEST						
	-Produce Mechanical GSE equipment						
	-Conduct test on equipment						
	-Pack, box and ship						

WORK PACKAGE DESCRIPTION FOR COSTING

WORK PACKAGE: 7300 SOFTWARE

WBS NO.	TASK	APP. TO FLT UNIT	PERFORMANCE OPERATIONS				
			PROGRAM OFFICE	TECH OPS	MFG.	QA	
7310	DESIGN & DEVELOPMENT						
	-Develop ground support software requirements.						
	-Develop and checkout software						
7320	VERIFICATION TEST						
	-Perform verification test with EGSE						
	-Pack, box and ship						

WORK PACKAGE DESCRIPTION FOR COSTING

WORK PACKAGE: 8100 SOFTWARE

WBS NO.	TASK	APP. TO FLT UNIT	PERFORMANCE OPERATIONS			
			PROGRAM OFFICE	TECH OPS	MFG.	QA
	o Develop software requirements o Develop and checkout software o Perform verification test with matrix processor.					

WORK PACKAGE DESCRIPTION FOR COSTING

WORK PACKAGE: 8200 COMPUTER SYSTEM

WBS NO.	TASK	APP. TO FLT UNIT	PERFORMANCE OPERATIONS				
			PROGRAM OFFICE	TECH OPS	MFG.	QA	
	GFE Items will not involve any GE expense.						

Major Technologies

Two major technologies have emerged in semi-conductors during the last decade i.e. bipolar and metal-oxide-semiconductor (MOS). The most popular and time tested bipolar technology is transistor-transistor logic (TTL) including low power schottky and schottky. The most popular MOS technology is N-Channel MOS with P-channel MOS maintaining the time proven position. This technology forecast does not expound on the differences and characteristics of each technology but presents each process since the developments are equally distributed.

The major technologies and their projected performance characteristics over a decade is shown in Table A.1 Table C.1 indicates that the major technologies during the next decade will be low power schottky and integrated injection logic (I^2L) for bipolar technology and CMOS/SOS for the metal oxide semi-conductor technology. These technologies fabricated on a standard 0.25 inch by 0.25 inch wafer equate to 159 gates at 1.0 milliwatts for metal oxide semiconductor. Bipolar technology will be characterized by 127 gates at 2.54 milliwatts. These equate to a factor of 0.5 reduction in average power and a factor of 10 increase in speed during the 1980-1985 timeframe. The operational characteristics of existing technologies are shown in Table A.2. The projected characteristics are shown in Table A.3.

Technology	Speed Power Product (pJ)	Gate propagation Delay (nsec)	Gate Density (gates/mm^2)	Date of Initial Production
P-channel metal gate	450	80	50	1966
P-channel Si-gate	.145	30	90	1969
Schottky bipolar	60	6	25	1969
N-channel Si-gate (High voltage)	45	15	95	1972
N-channel Si-gate depletion load	38	12	110	1974
Si-gate CMOS	0.5	10	45	1973
I^2L	1	50	40	1975
CMOS/SOS	0.2	3	100	1977(?)

MAJOR TECHNOLOGY CHARACTERISTICS
TABLE A.1

Parameter	Standard TTL	Low-power TTL (74L)	DTL	Low-power Schottky	C-MOS (5-V supply)	C-MOS (10-V supply)
Propagation delay	10 ns	33 ns	30 ns	5–10 ns	35 ns	25 ns
Flip-flop toggle frequency	35 MHz	3 MHz	5 MHz	40–80 MHz	5 MHz	10 MHz
Quiescent power	10 mW	1 mW	8.5 mW	2 mW	10 nW	10 nW
Noise immunity	1 V	1 V	1 V	0.8 V	2 V	4 V
Fanout	10	10	8	20	50*	50*

Reprinted From "Electronics" Jan. 1, 1975
Copyright McGraw Hill, Inc. 1975

GENERAL OPERATIONAL CHARACTERISTICS

TABLE A.2

The projected values are not a straightforward application of the anticipated gains. Regression analysis reveals that each technology possesses an upper limit which when applied to the existing parameters yields the anticipated parameters. The projection indicates that the operational frequency and power are well suited for flight systems during the desired timeframe. Further, the anticipated bipolar technology of integrated injection logic is not shown since its parameters are still in development stages. Manufacturer's are hypothesizing that this technology during the next five years will surpass the standard transistor and schottky logic families.

PARAMETER	T^2L	LTTL	DTL	LST^2L	C-MOS 5V	CMOS 10V
PROPAGATION DELAY	5NS	20NS	20NS	3NS	20NS	10NS
FREQUENCY	75MHz	30MHz	5MHz	150MHz	20MHz	70MHz
QUIESCENT POWER	5mW	0.5mW	7mW	1mW	5nW	5nW
NOISE IMMUNITY	1V	1V	1V	.8V	2V	4V
FANOUT	10	10	5	20	50+	50+

PROJECTED OPERATIONAL CHARACTERISTICS

TABLE A.3

The final aspect of the technologies is the packaging. Higher gate densities result in more powerful functions capable of being fabricated on a small area of silicon. Increased functionality requires increased pin counts if speed is to be maintained. This is evidenced by the current trends in moving from 14 pin to 24 pin packages. Figure A.1. Pin counts are increasing accompanied by increases in packaging yields, component assembly yields, test capabilities, and repairability. Figure A.1 indicates that packaging pin counts will not increase at a rapid rate so that no ramifications are anticipated for printed circuit board designs as well as board and component qualification processes.

These technology developments are based on the increased demands for microprocessors and large high speed semiconductor memories. Each of these areas are briefly discussed below due to their importance in simiconductor technology development.

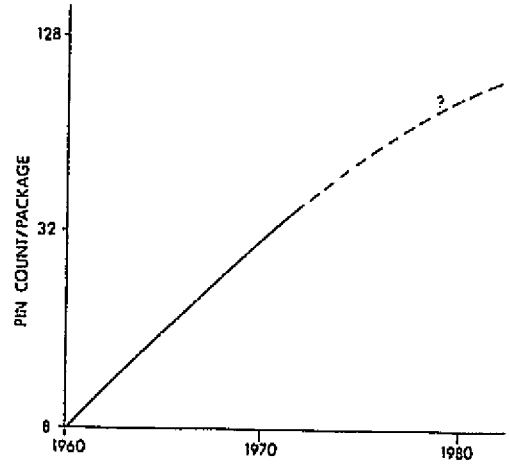

PIN COUNT TRENDS
FIGURE A.1

Microprocessor Trends

The microprocessor has created the major demand on technology advancement during the last 5 years. Each new development results in a more power processor capable of replacing large scale and mini-computers with tremendous cost savings as shown in Figure A.2. Excluding general electronic data processing areas such as health insurance fields, micro-computers will be employed more frequently

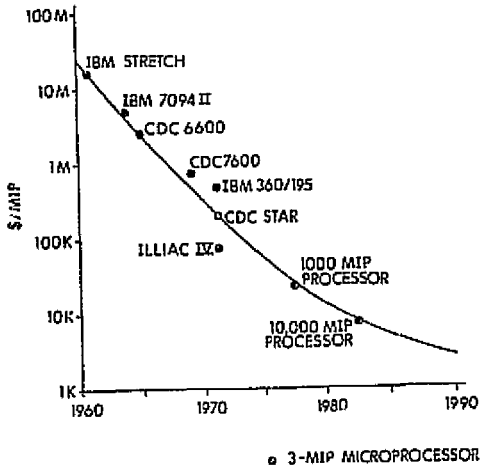

MIPS= MILLION INSTRUCTIONS PER SECOND

PROCESSOR TRENDS
FIGURE A.2

with cost savings being several orders of magnitude.

The microprocessor trends shown in Figure A.3 indicate that the figure of merit for the processors are linearly improving. The processor figure of merit is the product of the chip area, dissipation and instruction cycle time divided by the product of word length and number of instructions.

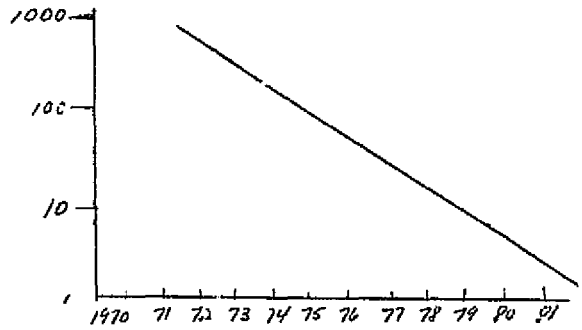

PROCESSOR FIGURE OF MERITS
FIGURE A.3

In addition, the cost per gate is decreasing linearly as shown in Figure A.4. The significant cost reductions are being achieved through high-volume and the increases in technology sophistication. The basic gate structure for integrated injection logic is composed of two transistors-one parasitic and one diffused so that technology is rapidly approaching the theoretical limit of one transistor

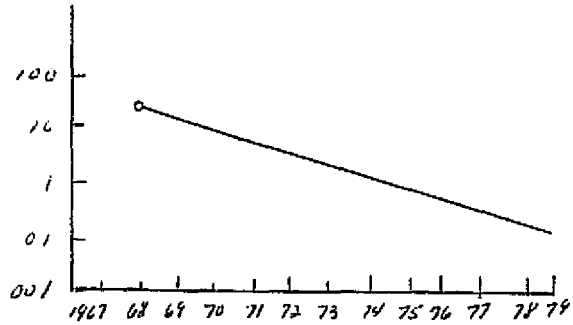

PROCESSOR COST/GATE TRENDS
FIGURE A.4

REPRODUCIBILITY OF THE
ORIGINAL PAGE IS POOR

per logic gate. This trend yields lower cost and increased functional power per single silicon chip.

Table A.4 shows the basic size of available microprocessors in 1975. It must be remembered that less than 5 years ago, only one or two processors with crude architectures were available. Today, there are over 30 such devices with support components and software to rapidly realize a sophisticated one or two board general or special purpose computer. Trends indicate that during the 1980 timeframe this list will at least triple with the standard processor being a 16 bit fixed instruction CPU and a 4 bit microprogrammable slice. The anticipated speed of these machines is a register to register addition time of 125 nanoseconds.

Projected cycle times limit these devices from being universal solutions. Finally, it must be remembered that these devices require additional components so that a microcomputer is not just the microporcessor or a single chip. At the present time only Texas Instruments manufactures a single chip computer.

AVAILABLE MICROPROCESSORS

Type No.	CPU Bits (bit slice size)	Address Capacity	Comments* Developing Manufacturer**
p-MOS			
LP 8000	8	2-k	General Instruments
4004	4	4-k	Intel
4040	4	4-k	Intel
8008-1	8	16-k	Intel
5065	8	32-k	Mostek
GPC/P	4	100	BS, MP, National
IMP-4	4	4-k	MP, MC, National
IMP-8	8	64-k	MP, MC, National
IMP-16	16	64-k	MP, MC, National
PACE	16	64-k	MP, MC, National
PPS-4	4	4-k	SV, Rockwell
PPS-8	8	16-k	SV, Rockwell
PPS-4/2	4	128	CC, SV, Rockwell
TMS 1000	4	8-k	SV, MP, Texas Instruments
SC/MP	8	64-k	CC, SV, National
n-MOS			
EA 9002	8	64-k	SV, Electronic Arrays
F-8	8	64-k	CC, Fairchild
CP-1600	16	64-k	MP, General Instruments
8080	8	64-k	Intel
6501	8	64-k	SV, MOS Technology
M6800	8	64-k	SV, Motorola
CMP-8	8	64-k	National
2650	8	32-k	SV, Signetics
TLCS-12	12	4-k	MP, Toshiba
MCP-1600	16	64-k	MP, MC, Western Digital
PFL-16A	16	64-k	MC, Panafacom
C-MOS			
COSMAC	8	64-k	SV, RCA
6100	12	4-k	SV, CC, Intersil
Bipolar			
3002	2	512	BS, SV, MP, Intel
RP16	4	64-k	BS, ECL, MC, SV, Raytheon
6701	4	64-k	BS, SV, MP, Monolithic Memories
SBP0400	4	64-k	I²L, CC, BS, SV, MP, Texas Instruments
1601	4	32-k	BS, MP, Transitron
2901	4	64-k	BS, MP, Advanced Micro Devices
10800	4	64-k	BS, MP, CC, ECL, Motorola
9400	4	64-k	BS, MC, MP, SV, Fairchild

*NOTES BS – Bit slice; MP – Microprogramable; ECL – Emitter coupled logic; I²L – Integrated injection logic; SV – Single voltage; MC – Multi chip cpu; CC – Clock on chip

**Second sources not listed

Reprinted From "Electronics" Oct. 16, 1975
Copyright McGraw Hill, Inc. 1975

TABLE A.4

This computer possesses a fixed program so that it is oriented for high volume applications and requires careful program development. The demands on microprocessors and microcomputers require a concentrated effort on semi-conductor memory and mass storage devices.

Memory Trends

Memories have emerged as a technology metric for density, yield, and reliability. Several years ago, the major effort was to develop the 1024 bit random access static memory capable of operating at cycle times under 200 nanoseconds. Today, the 65,536 bit random access dynamic memory with a cycle time of 180 nanoseconds is a reality. Figure A.5 dipects the projected capacities and speeds for various media over the next two decades.

The memories exhibit an increased figure of merit as shown in Figure A.6. The figure of merit is the product of the chip area, dissipation and access time divided by the number of bits. As evidenced in Figure A.6, the characteristics of the static random access memory are rapidly converging on the characteristics of the dynamic random access memory. By 1980, the technology will yield high performance high density static random access memories at low cost as shown in Figure A.7.

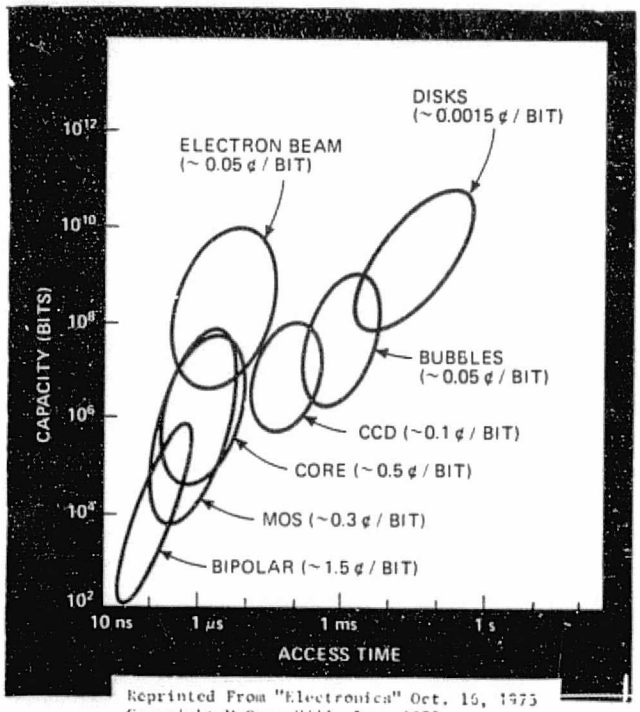

Reprinted From "Electronics" Oct. 16, 1975
Copyright McGraw Hill, Inc. 1975

CURRENT MEMORY CHARACTERISTICS
FIGURE A.5

REPRODUCIBILITY OF THE
ORIGINAL PAGE IS POOR

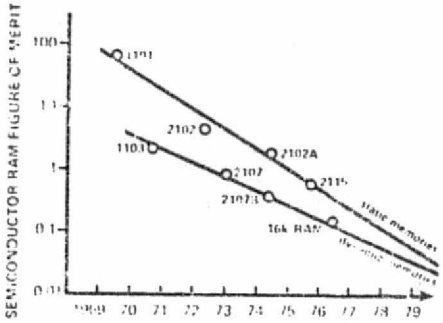

MEMORY FIGURE OF MERIT
FIGURE A.6

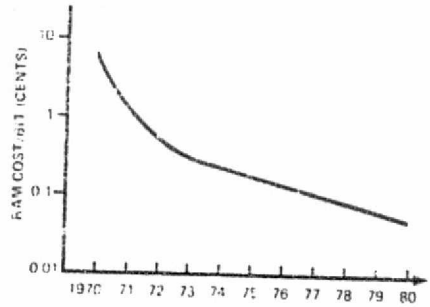

MEMORY COST TRENDS
FIGURE A.7

Finally, random access memory performance characteristics for various technologies are shown in Figure A.8.

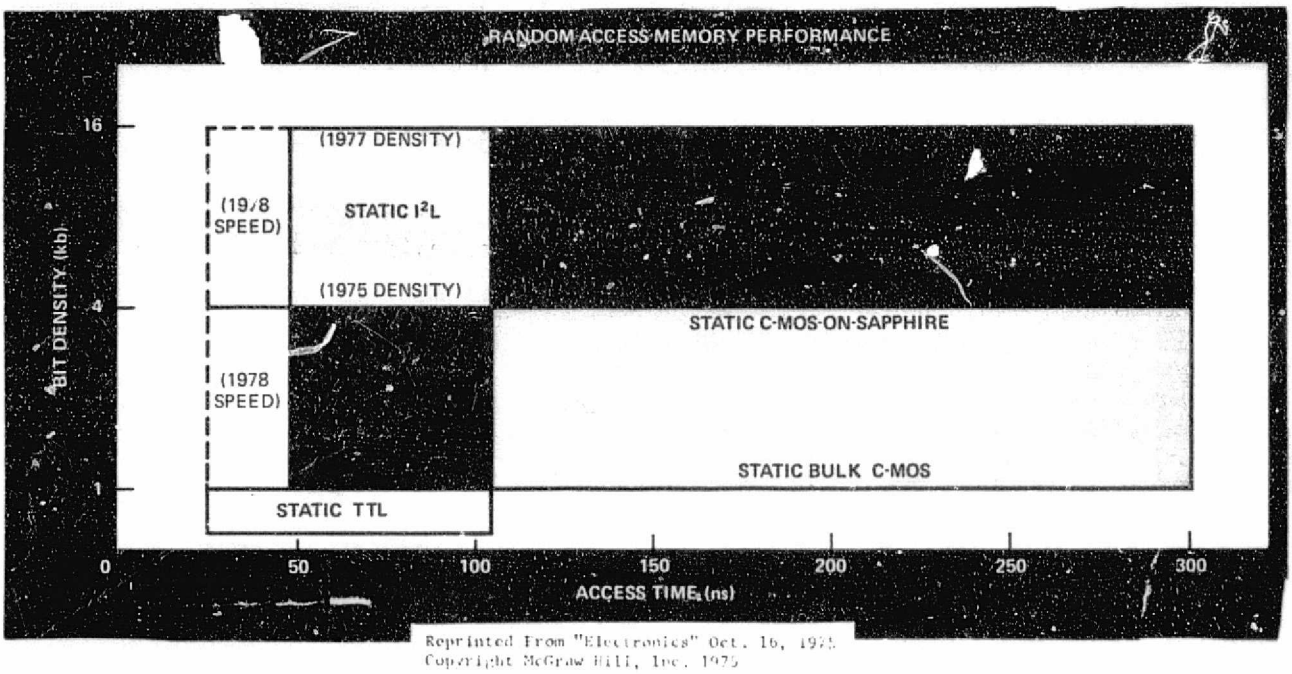

Reprinted From "Electronics" Oct. 16, 1975
Copyright McGraw Hill, Inc. 1975

FIGURE A.8

Based on these characteristics, the 1980-1985 technologies will yield 25 to 50 nanosecond 4-16 kilobit memories which are required for high speed signal processing. A 16K x 16 bit memory in an operational mode will require approximately 13.1 watts. In addition, many systems require a large off-line storage. The magnetic tape

units provide the maximum capacity but are slow and unreliable. Current research efforts focus on disc file storage. The projected capacities for this storage media are shown in Table A.5 which indicates that the anticipated storage requirements for shuttle era will be met with 2 or 3 devices.

In summary, the over-all performance range of LS1 technologies is shown in Figure A.9. From this chart, the rapid advances in simiconductor development are indicated by research and development in schottky integrated injection logic while standard integrated injection logic is still in the initial production stages.

Year	Linear Density (bits/in.)	Track Density (traces/in.)	Storage Density (bits/in.²)
1960	200	40	8000
1965	2200	100	220,000
1970	4000	200	800,000
•			
•			
•			
1985	160,000	2000	320 x 10⁶

TABLE A.5

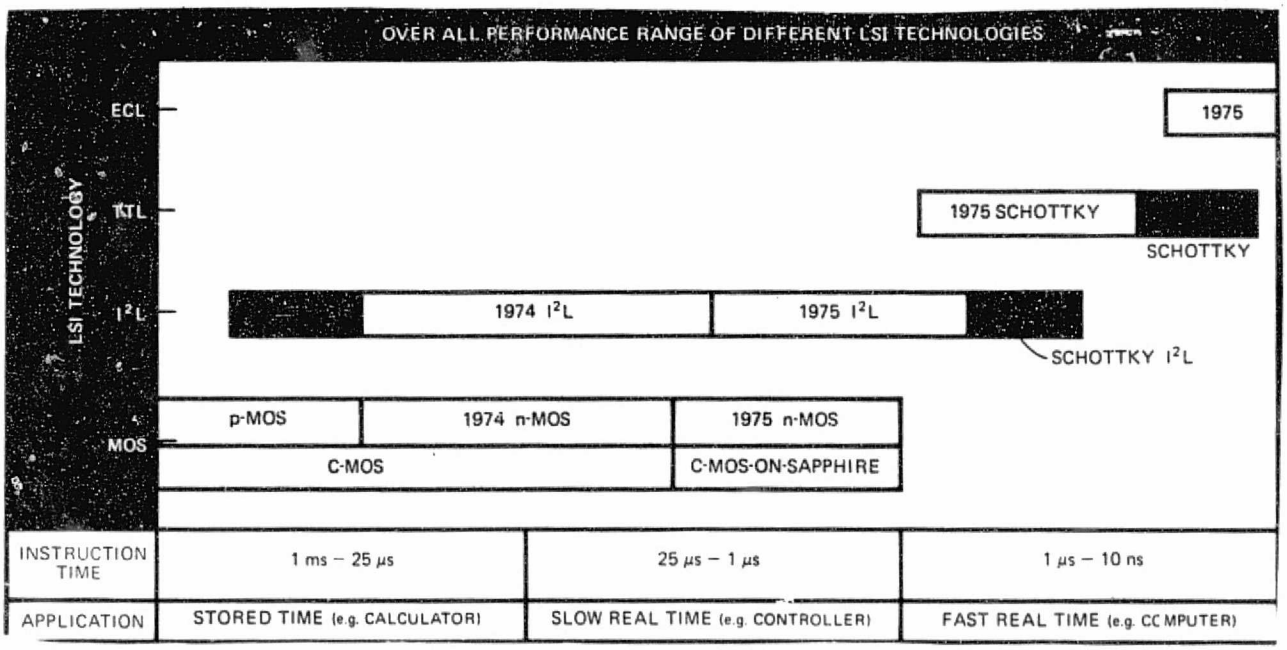

Reprinted From "Electronics" Oct. 16, 1975
Copyright McGraw Hill, Inc. 1975

FIGURE A.9

REPRODUCIBILITY OF THE ORIGINAL PAGE IS POOR

The number of components (e.g. transistors, resistors, diodes) per integrated circuit chip shown in Figure A.10 has been increasing exponentially. The physical limitation of the number of components that can be fabricated in a given area with an acceptable yield is dependent on the optical diffraction limit. This limit assumes 0.1 mil minimum features over a 2 in. diameter wafer and has been achieved under laboratory conditions. Moreover, smaller dimensions are capable of being achieved using emerging electron beam and X-ray lithographic techniques. Technology trends indicate more power, higher reliability, and lower cost components accounting for the major shift back to hardware centered systems.

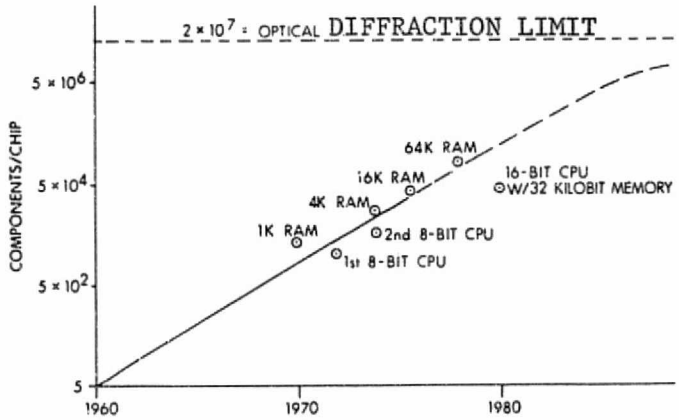

IC COMPONENT DENSITIES
FIGURE A.10

SOFTWARE BENCHMARK SUBROUTINES

ADDITION SUBROUTINE

TITLE: ADD

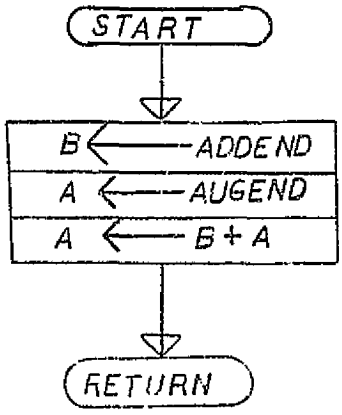

BYTES = 6

TIME = 9.5 μ sec

SUBTRACT SUBROUTINE

TITLE: SUB

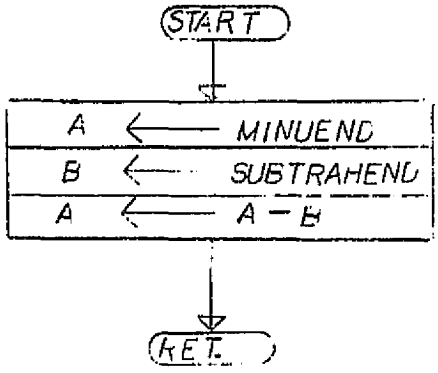

BYTES = 6

TIME = 11.0 μ sec

TITLE: ACC

ACCUMULATION SUBROUTINE

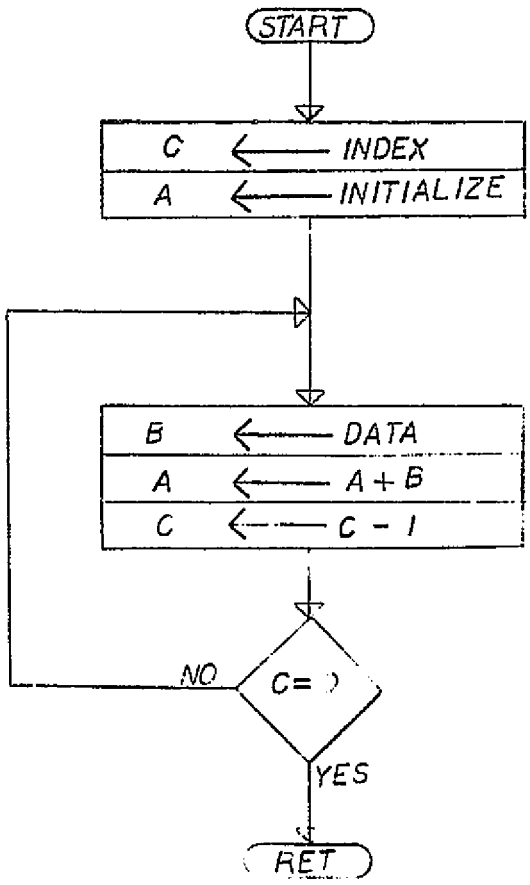

BYTES = 12

TIME = 25.0 μsec *

*ONE ITERATION

TIME = N × 20.0 + 5.0 μsec **

**N ITERATIONS

TITLE: LOOK

TABLE LOOK UP SUBROUTINE

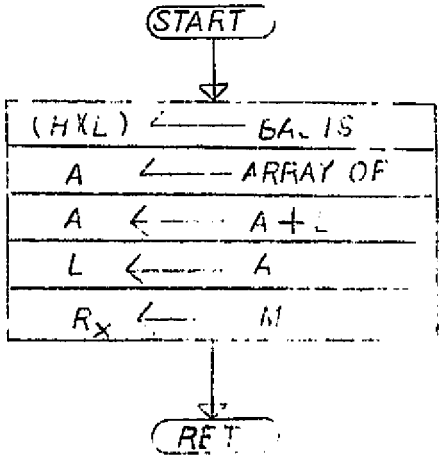

BYTES = 9

TIME = 23.0 μsec

REPRODUCIBILITY OF THE ORIGINAL PAGE IS POOR

CONVERT TO POSITIVE AND COMPUTE PRODUCT SIGN SUBROUTINE

TITLE: CON SAVE

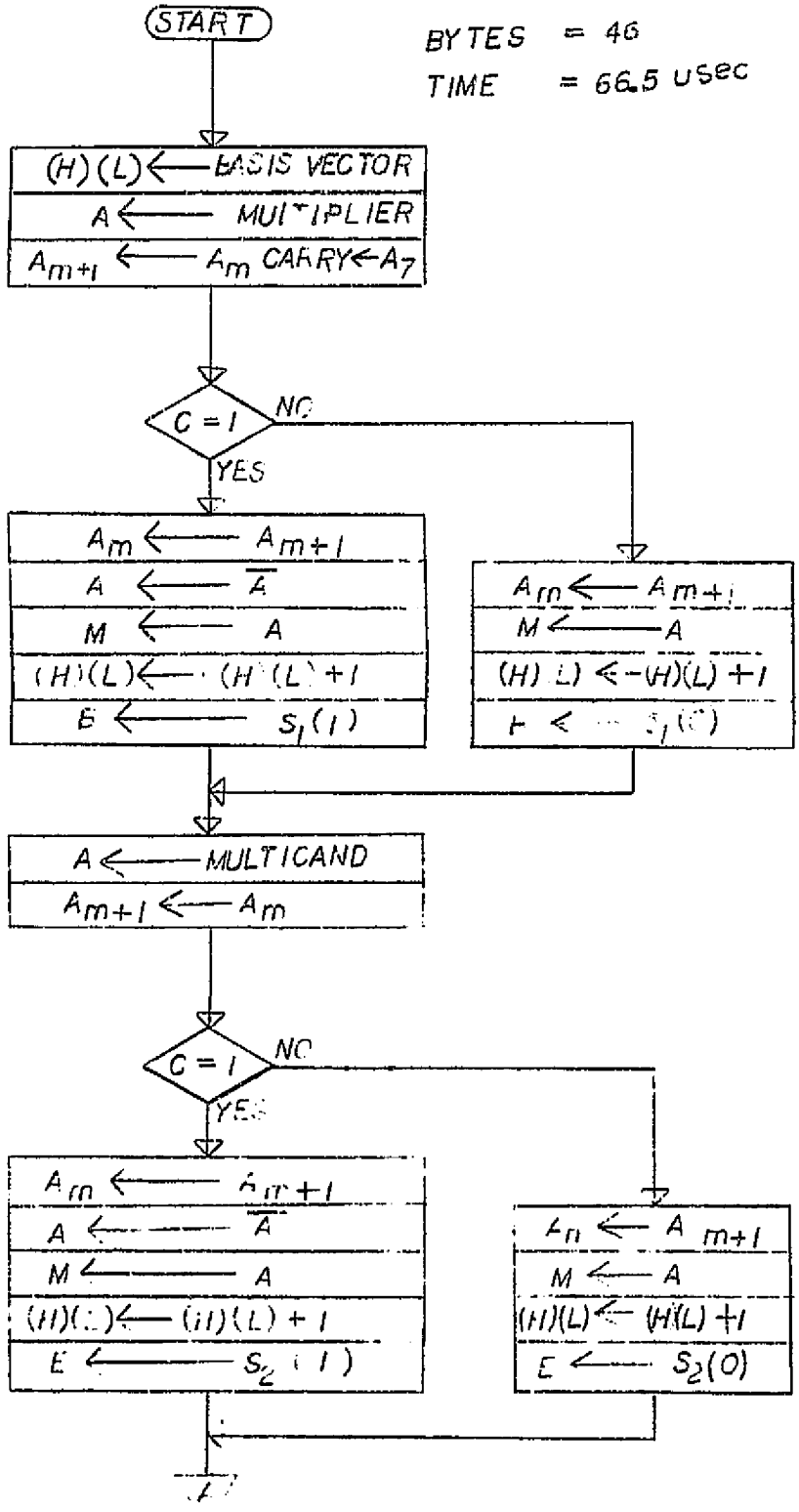

CON SAVE CONTINUED

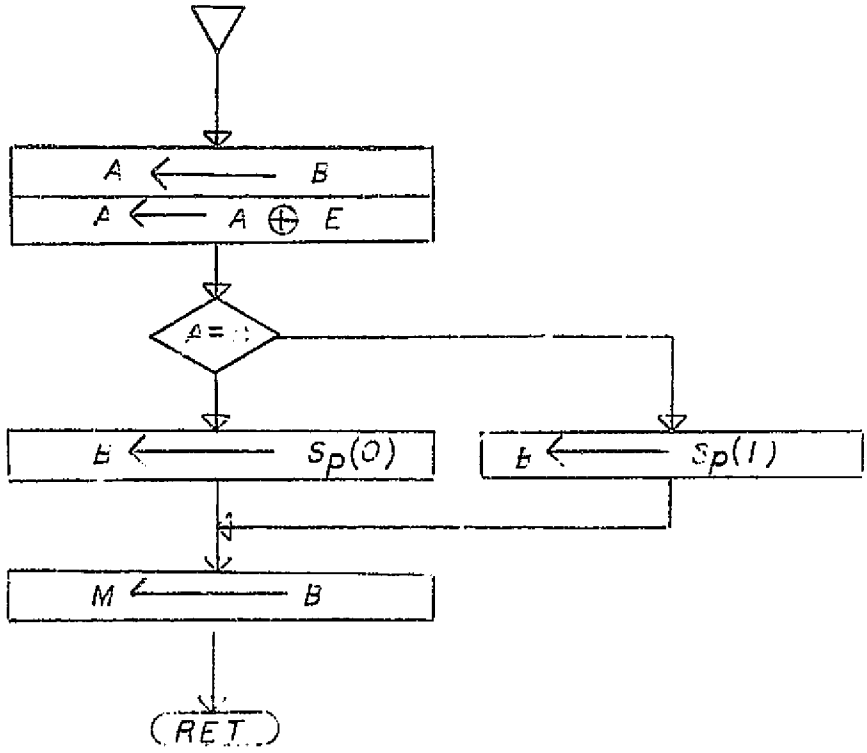

SIGNED PRODUCT SUBROUTINE

TITLE: SIGN

TIME = 33.5 μsec
BYTES = 16

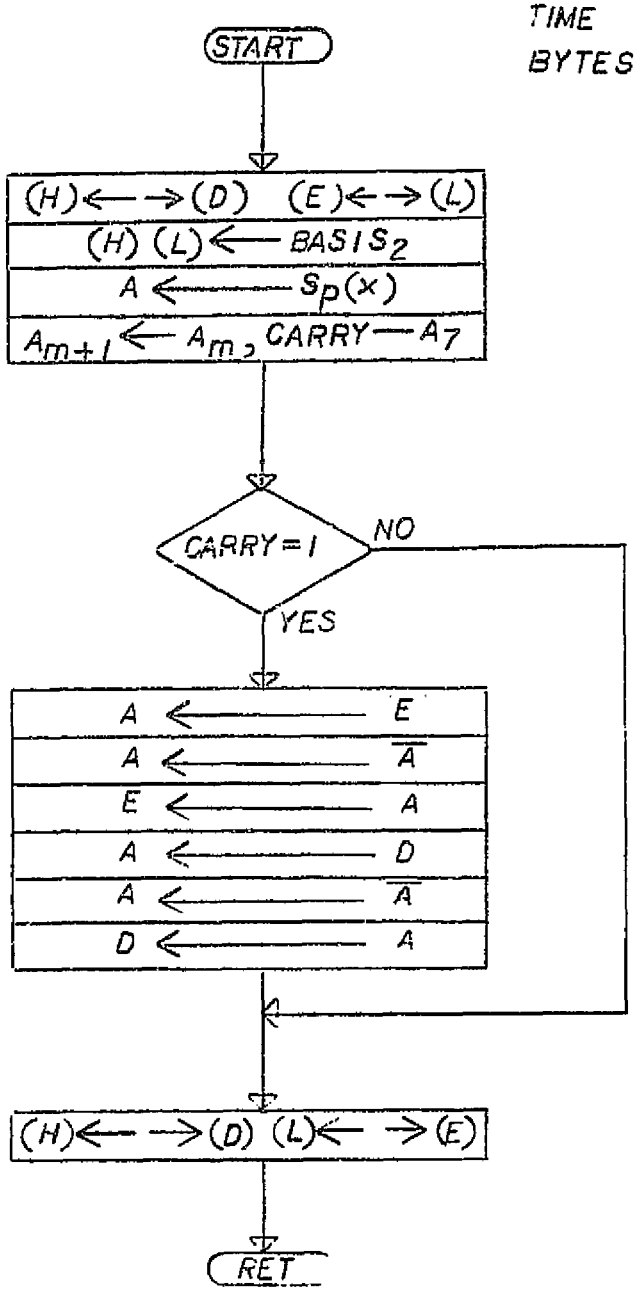

SOLUTION ONE PROCESS ONE PROGRAM

TITLE: $A \cdot X \div A \cdot X^{-1}$

LOADING = 119 BYTES
TIME$_{EXC}$ = 518 μSec

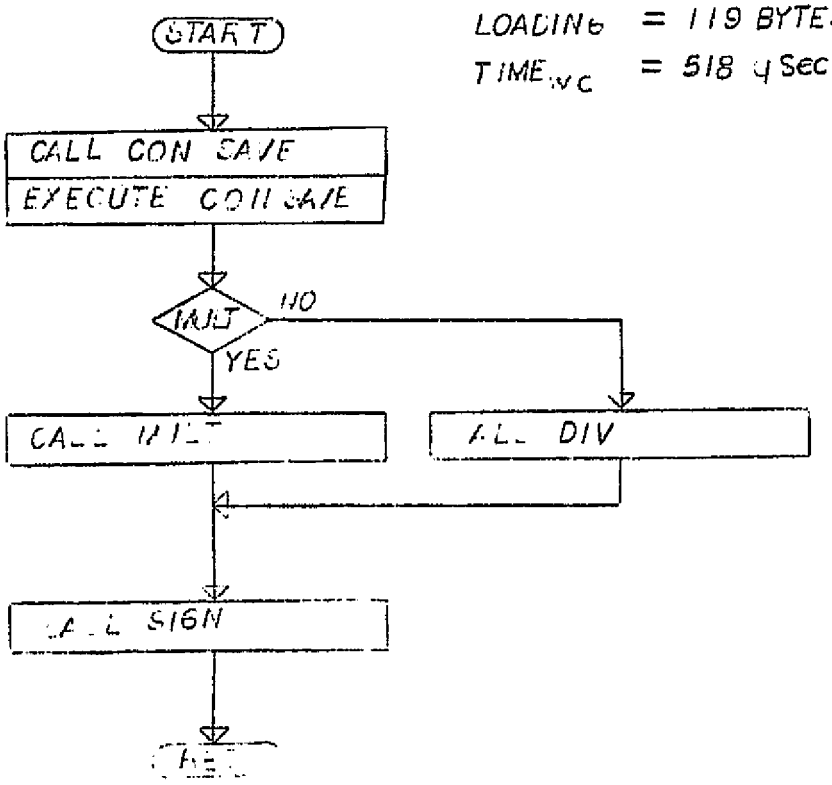

SOLUTION ONE PROCESS TWO PROGRAM

TITLE $\sum_{i=1}^{I} (A \pm B)$

LOADING – 30 BYTES
TIME $[I \cdot 31 + 5]$ μsec

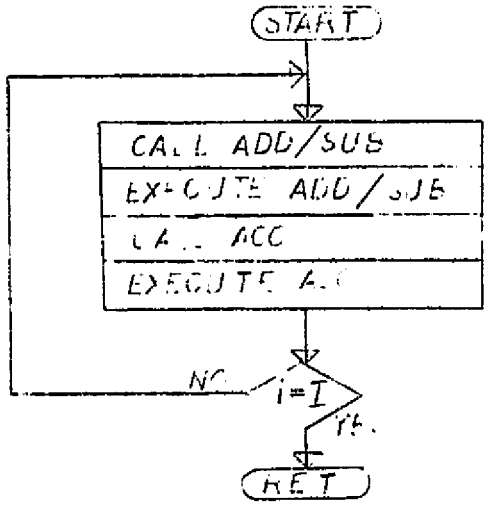

SOLUTION TWO PROCESS ONE PROGRAM

TITLE: $A \cdot X \neq A \cdot X^{-1}$

LOADING = 119 BYTES
TIME = 518 μsec

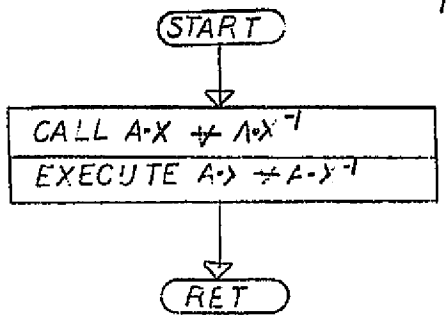

SOLUTION THREE PROCESS TWO PROGRAM

TITLE: $A \pm b$

LOADING = 21 BYTES
TIME = 26 μsec

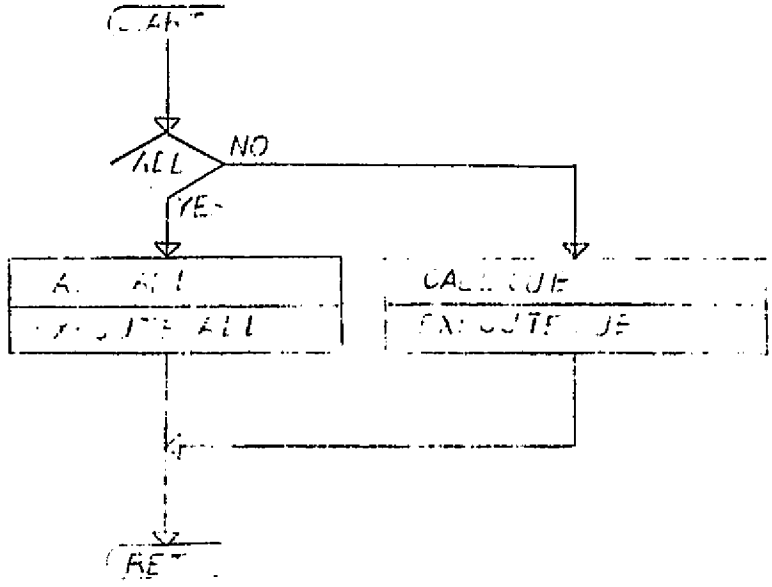

SOLUTION THREE PROCESS ONE PROGRAM

TITLE: $\sum_{i=0}^{I}(AX \pm B)$

LOADING = 155 BYTES

TIME = $(533 + 31 \cdot I)$ μsec

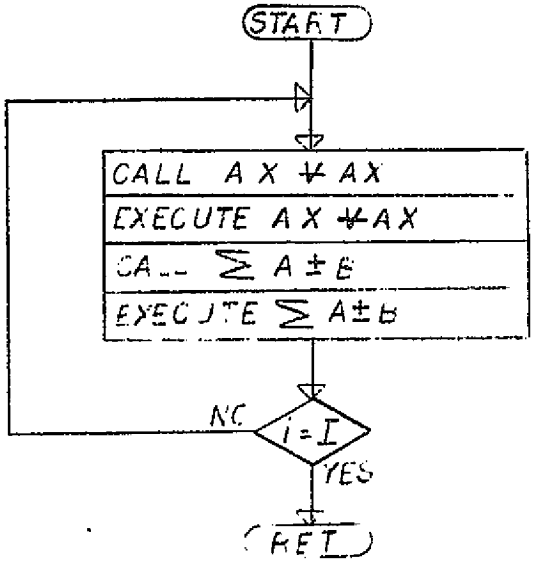

REPRODUCIBILITY OF THE ORIGINAL PAGE IS POOR

UNSIGNED MULTIPLICATION SUBROUTINE

TITLE: MULT

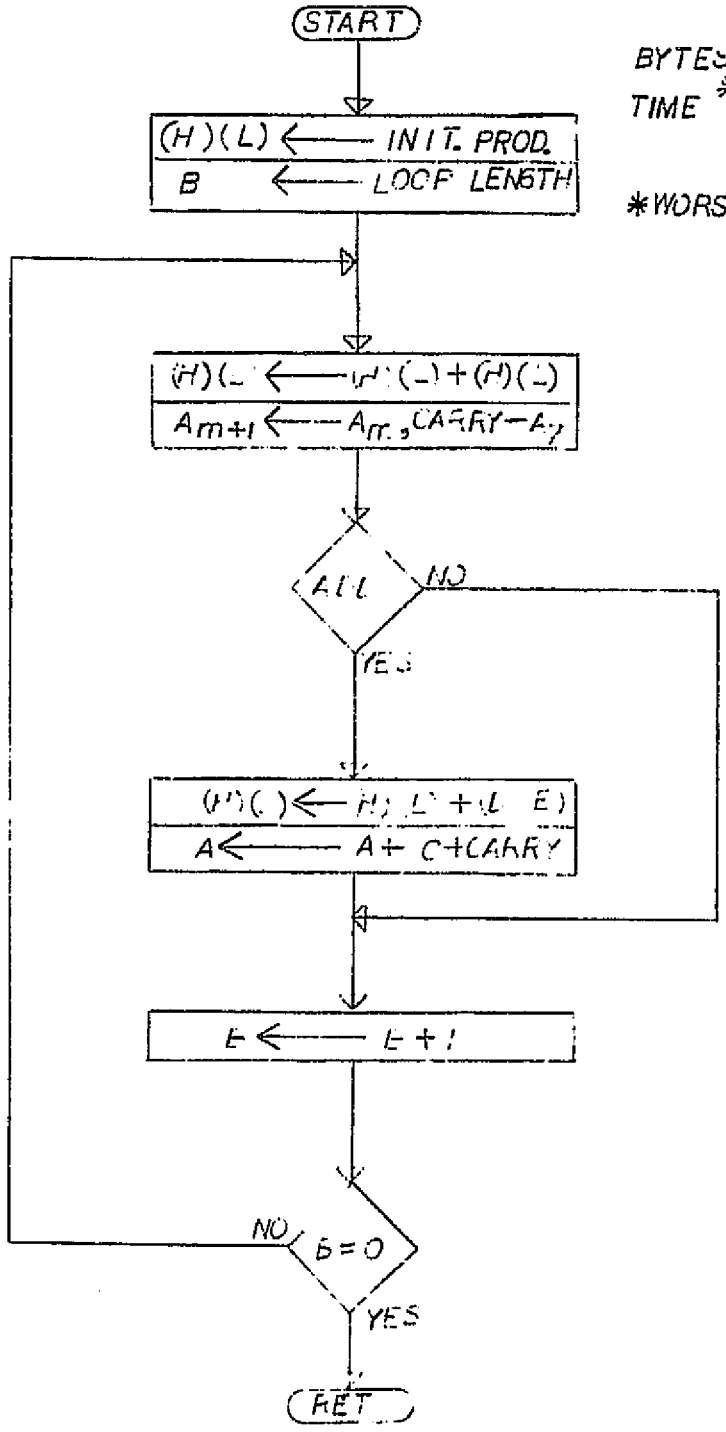

BYTES = 17
TIME * = 292.0 μsec

*WORST CASE

POLYNOMIAL SUBROUTINE

TITLE: POLY

BYTES = 436

TIME = 417.5 + I · [illegible] MSEC

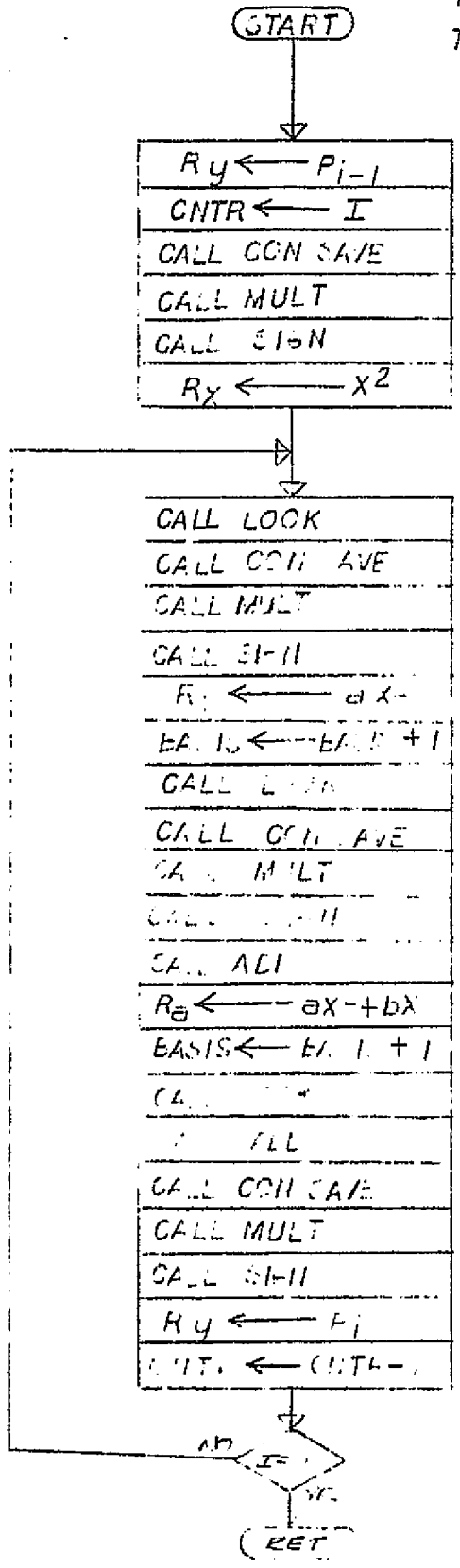

SOLUTION TWO PROCESS TWO-ONE PROGRAM

TITLE: $SIN^{-1}/COSINE^{-1}/TAN^{-1}/COT^{-1}$

LOADING = 30 BYTES
TIME = 58.5·N μsec

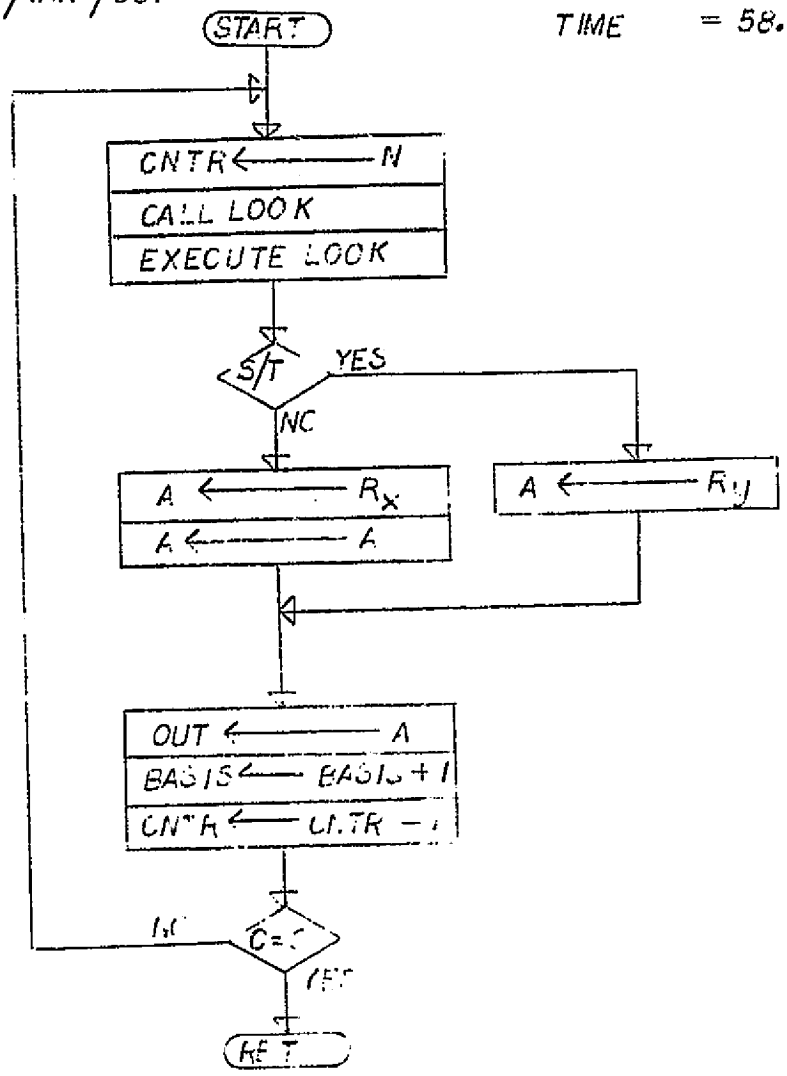

DIVISION SUBROUTINE

TITLE: DIV

BYTES = 34
TIME = 408.0 μsec

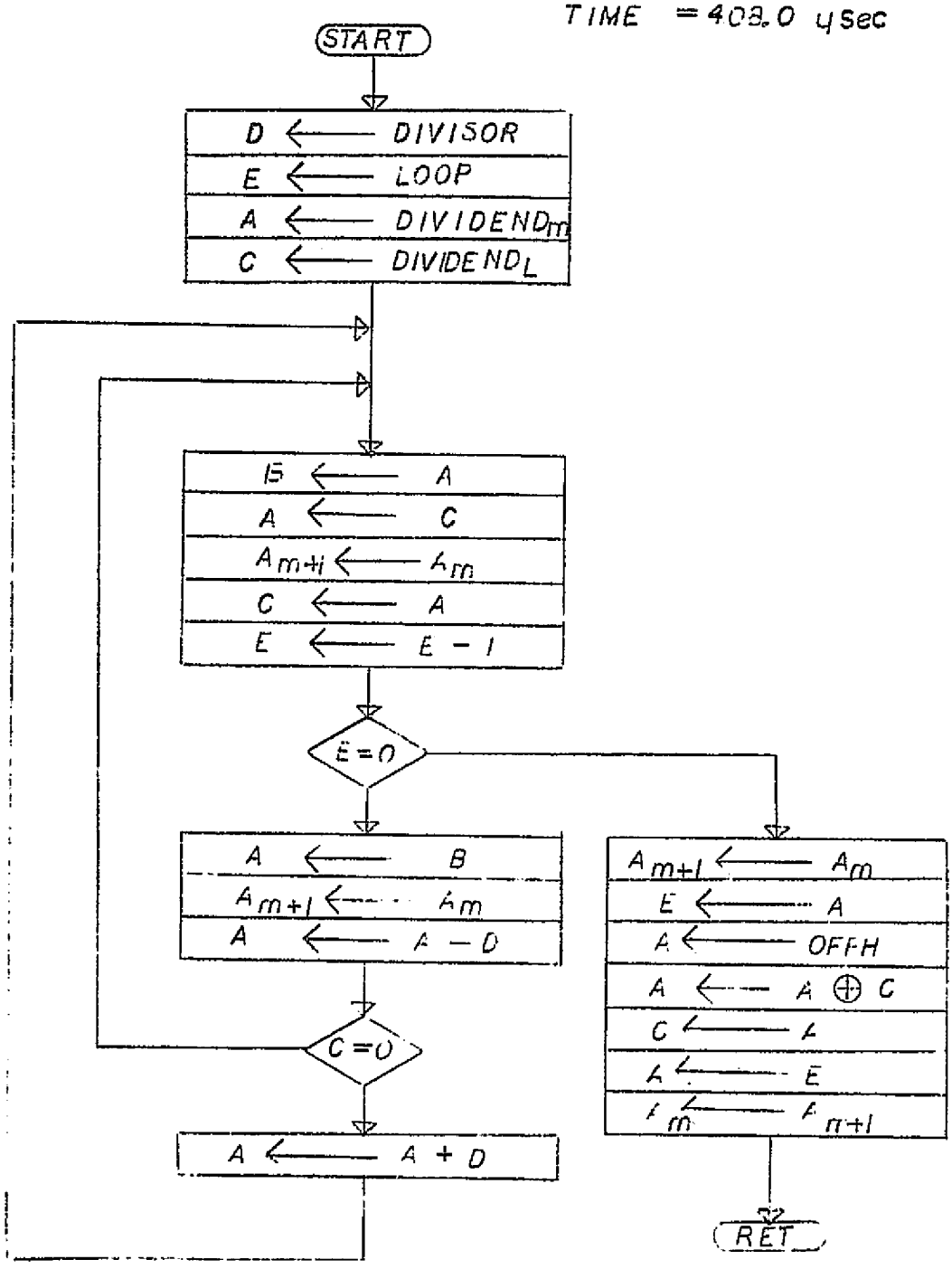

REPRODUCIBILITY OF THE
ORIGINAL PAGE IS POOR

SOLUTION TWO PROCESS ONE-TWO PROGRAM

TITLE: SEC/CSC

LOADING = 70 BYTES
TIME = (418 + 58.5 N) μsec

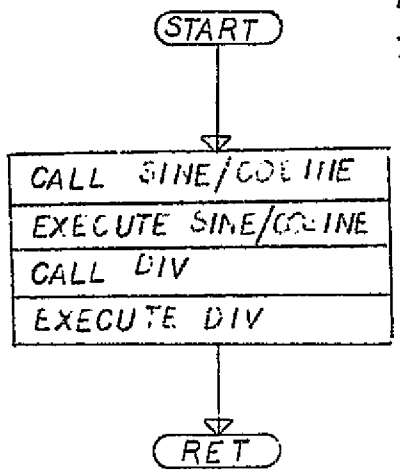

SOLUTION TWO PROCESS ONE-THREE PROGRAM

TITLE: TAN/COT

LOADING = 110 BYTES
TIME = (116.5N + 438) μsec

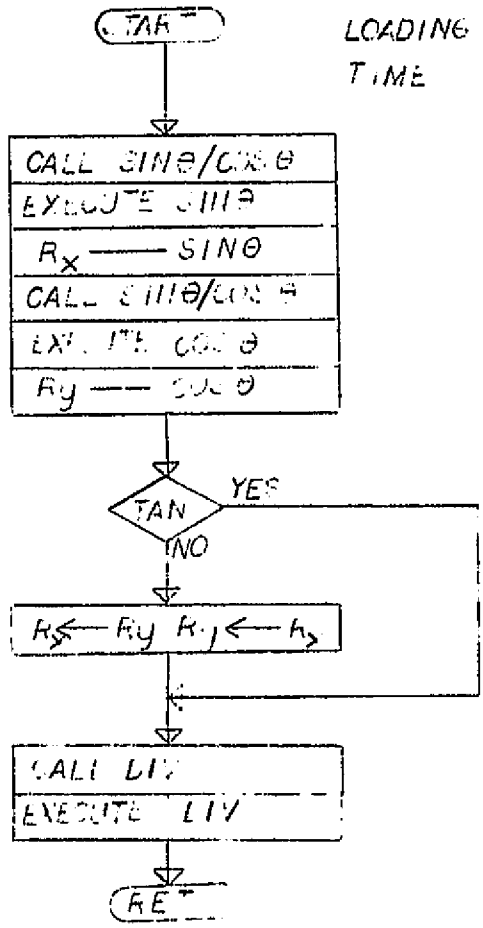

SOLUTION TWO PROCESS ONE-ONE PROGRAM

TITLE: SINE/COSINE

LOADING = 30 BYTES
TIME = (58.5·N) μsec

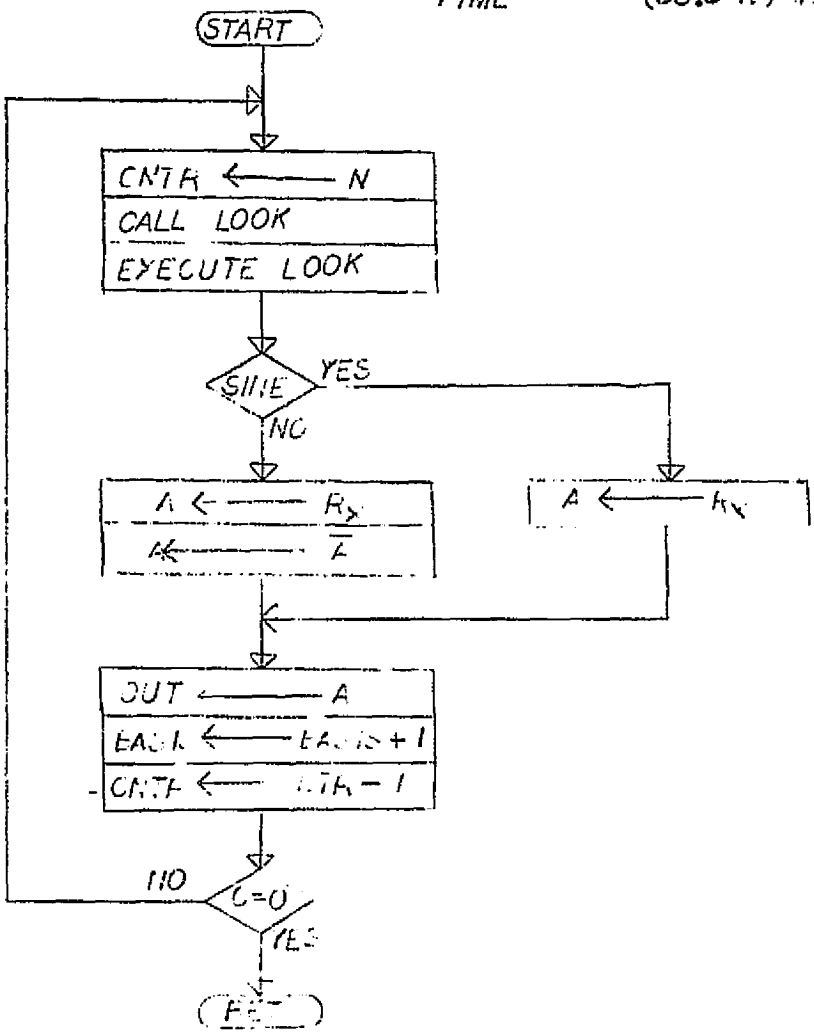

Polynomial Solutions

Thesis:

Many functions required in information processing are characterized by or based on polynomials. Further, trigonometric, exponential, and logarithmic functions are polynomial approximations of an argument. In addition, each process required by the boundary sensors are capable of polynomial solutions. Increased interest in numerical analysis has established the importance of the polynomial and the ability to implement a polynomial. Since increased information processing such as information processing, is anticipated for the Space Shuttle Era, the polynomial must be evaluated as a viable solution. It will be shown that the uniqueness of the polynomial based solution permits the combination of several discrete processes reducing both the number of processing steps and machine complexity including time required. In investigating the applicability of this approach, the general algorithm will be developed and consequently, implemented in both hardware and software with the software implementation focusing on standard micro-computer.

Polynomial Analysis:

From basic mathematics, a general polynomial may be expressed as

eq. (1) $$P^{N}(X) = \sum_{n=0}^{N-1} a \; * \; Y_{n}(X)$$

where N = the order of the resultant polynomial

a_n = the coefficient of the nth term

and y_n = the value of the argument for the nth term

In particular, a Maclaurian series polynomial with Lagrange coefficients may be expressed as

eq. (2) $$P^{N}(X) = \sum_{n=0}^{N-1} a_n * x^n$$

where $y_n = x^n$

The resultant polynomial in equation 2 is solely dependent on the derivation of its coefficients for its resultant characteristics. For example, one set of coefficients when applied will yield a particular trigonometric function while another set of coefficients will yield a logarithmic function. Some typical functions and processes based on ploynomials are listed in Table C-1.

If equation 2 is expanded about the argument, the polynomial may be written as

eq. (3) $$P^N(X) = a_0 + a_1 * X + a_2 * X^2 + a_3 * X^3 + \ldots\ldots + a_{N-1} * X^{N-1}$$

where a_n = a signed number

x^n = a signed number

However, this polynomial may be solved for its roots by several methods - typically Newton's Method, resulting in a set first order polynomials expressed as

eq. (4) $$P^N(X) = (c_0 * X + b_0) * (c_1 * X + b_1) * \ldots\ldots * (c_{N-1} * X + b_{N-1})$$

where c_n / b_n = the nth root of the polynomial

This form of the polynomial provides the basis for the implementation. Initially, assume that the coefficients are known a priori and are not a function of the argument but rather a function of the process to be performed. Based on equation 4, the general polynomial relationships may be determined.

<u>lemma 1</u>:

The characteristic polynomial in equation 4 may be expressed as a set of first order polynomials or a set of lower order polynomials by grouping adjacent terms. If adjacent pairs are grouped, then

eq. (5) $$P^N(X) = [(c_0 * X + b_0) * (c_1 * X + b_1)] * \ldots\ldots\ldots * [(c_{N-2} * X + b_{N-2}) * (c_{N-1} * X + b_{N-1})]$$

so that

REPRODUCIBILITY OF THE ORIGINAL PAGE IS POOR

REPRESENTATIVE POLYNOMIALS

FUNCTION/PROCESS	
EXPONENTIAL	
e^x	$1 + x + \frac{x^2}{2!} + \frac{x^3}{3!} + \frac{x^4}{4!} + \cdots + \frac{x^n}{n!}$
a^x	$1 + x \ln a + \frac{x \ln a^2}{2!} + \frac{x \ln a^3}{3!} + \cdots + \frac{x \ln a^n}{n!}$
BESSEL FUNCTIONS	
$J_n(x)$	$\frac{x^n}{2^n \Gamma(n+1)} \left[1 - \frac{x^2}{2^2 n+1} + \frac{x^4}{2^4 2! (n+1)(n+2)} - \cdots \right]$
TRIGONOMETRIC	
SIN x	$x - \frac{x^3}{3!} + \frac{x^5}{5!} - \frac{x^7}{7!} + \cdots + \frac{x^n}{n!}$ $n =$ odd
COS x	$1 - \frac{x^2}{2!} + \frac{x^4}{4!} - \frac{x^6}{6!} + \cdots + \frac{x^n}{n!}$ $n =$ even
SIGNAL PROCESSING	
GALOIS SWITCHING FUNCTION	$\sum_{k=0}^{p^n - 1} f(k) \gamma^k$
NEGATIVE POLARIZATION	$\sum_{i=0}^{m} P_i^j (-b)^{i+j}$

TABLE C-1

eq. (6) $$P^N(X) = \left[c_0 * c_1 * X^2 + \left(c_0 * b_1 + c_1 * b_0\right) * X + b_0 * b_1\right]$$
$$\left[c_{N-2} * c_{N-1} * X^2 + \left(c_{N-2} * b_{N-1} + c_{N-1} * b_{N-2}\right) * X + b_{N-1} * b_{N-2}\right]$$

which allows the basic polynomial to be expressed as

eq. (7) $$P_n^N(X^2) = A_n * X^2 + B_n * X + C_n$$

where $A_n = c_n * c_{n+1}$

$B_n = c_n * b_{n+1} + c_{n-1} * b_n$

and $C_n = b_n * b_{n+1}$

if the roots are grouped by three's, then

eq. (8) $$P^N(X) = \left[\left(c_0 * X + b_0\right) * \left(c_1 * X + b_1\right) * \left(c_2 * X + b_2\right)\right] *$$
$$\left[\left(c_3 * X + b_3\right) * \left(c_4 * X + b_4\right) * \left(c_5 * X + b_5\right)\right] * \ldots\ldots *$$
$$\left[\left(c_{N-3} * X + b_{N-3}\right) * \left(c_{N-2} * X + b_{N-2}\right) * \left(c_{N-1} * X + b_{N-1}\right)\right]$$

so that

eq. (9) $$P^N(X) = \left[c_0 * c_1 * c_2 * X^3 + \left(c_0 * c_1 * b_2 + c_1 * c_2 * b_0 + c_0 * c_2 * b_1\right) * X^2\right.$$
$$\left. + \left(c_1 * b_0 * b_2 + c_0 * b_1 * b_2 + c_2 * b_0 * b_1\right) * X + b_0 * b_1 * b_2\right] * .$$
$$\ldots\ldots * [$$

which results in a basic polynomial expressed as

eq. (10) $$P_n^N(X^3) = A_n * X^3 + B_n * X^2 + C_n * X + D_n$$

where $A_n = c_{N-1} * c_{N-2} * c_{N-3}$

$B_n = c_{N-3} * c_{N-1} * b_{N-2} + c_{N-2} * c_{N-3} * b_{N-1} + c_{N-1} * c_{N-2} * b_{N-3}$

$C_n = c_{N-2} * b_{N-1} * b_{N-3} + c_{N-1} * b_{N-2} * b_{N-3} + c_{N-3} * b_{N-1} * b_{N-2}$

and $D_n = b_{N-1} * b_{N-2} * b_{N-3}$

Consequently, the polynomial expressed in equation 4 may be written as

eq. (11) $$P^N(X) \quad P_0^N(X^m) * P_1^N(X^m) * P_2^N(X^m) * \ldots\ldots * P_{N/m}^N(X^m)$$

where $P_n^N(X^m)$ = the spline or basis function

and m = the order of the spline or grouping factor

Therefore, the number of splines required to realize an Nth order polynomial may be expressed as

REPRODUCIBILITY OF THE ORIGINAL PAGE IS POOR

eq. (12) $$i = N/m$$

where i is truncated to the next higher integer value. For example, let $N = 21$ and $m = 2$ which requires 10 second order slines and 1 first order spline. However, since all splines are of the same order, 11 second order splines would be required to realize this polynomial. Figure C-1 summarizes the number of splines required to achieve a resultant polynomial of order N as a function of the order of the spline.

In addition, the number of coefficients required to achieve this order are shown for various splines and polynomials in Figure C-2. Based of these two figures, the most significant change occurs between a first and second order spline with the higher order splines influence appearing for extremely high order polynomials. The general characteristics of splines are listed in Table C-2. Based on these parameters, the second order spline was selected as being the most advantageous for the typical polynomial orders incurred in information processing - usually 14 or less.

lemma 2:

The ability to implement a set of splines along classical design paths would result in a cumbersome, uneconomical, futile system rather than a simple function generator. In addition, unless exponentially increasing data paths were maintained, significant errors would be present in the resultant solution. Re-iterating equation 11 yields,

eq. (13) $$P^N(x) = P_0^N(x^m) * P_1^N(x^m) * P_2^N(x^m) * \ldots * P_{N/m}^N(x^m)$$

or in more general terms

eq. (14) $$P_i^N(x) = P_0^N(x^m) * P_1^N(x^m) * \qquad + P_i^N(x^m) \quad i = \begin{pmatrix} N/m \\ 0 \end{pmatrix}$$

where i = the number of splines required to realize the resultant polynomial

For $i = 0$, equation 14 yields

FIGURE C-1

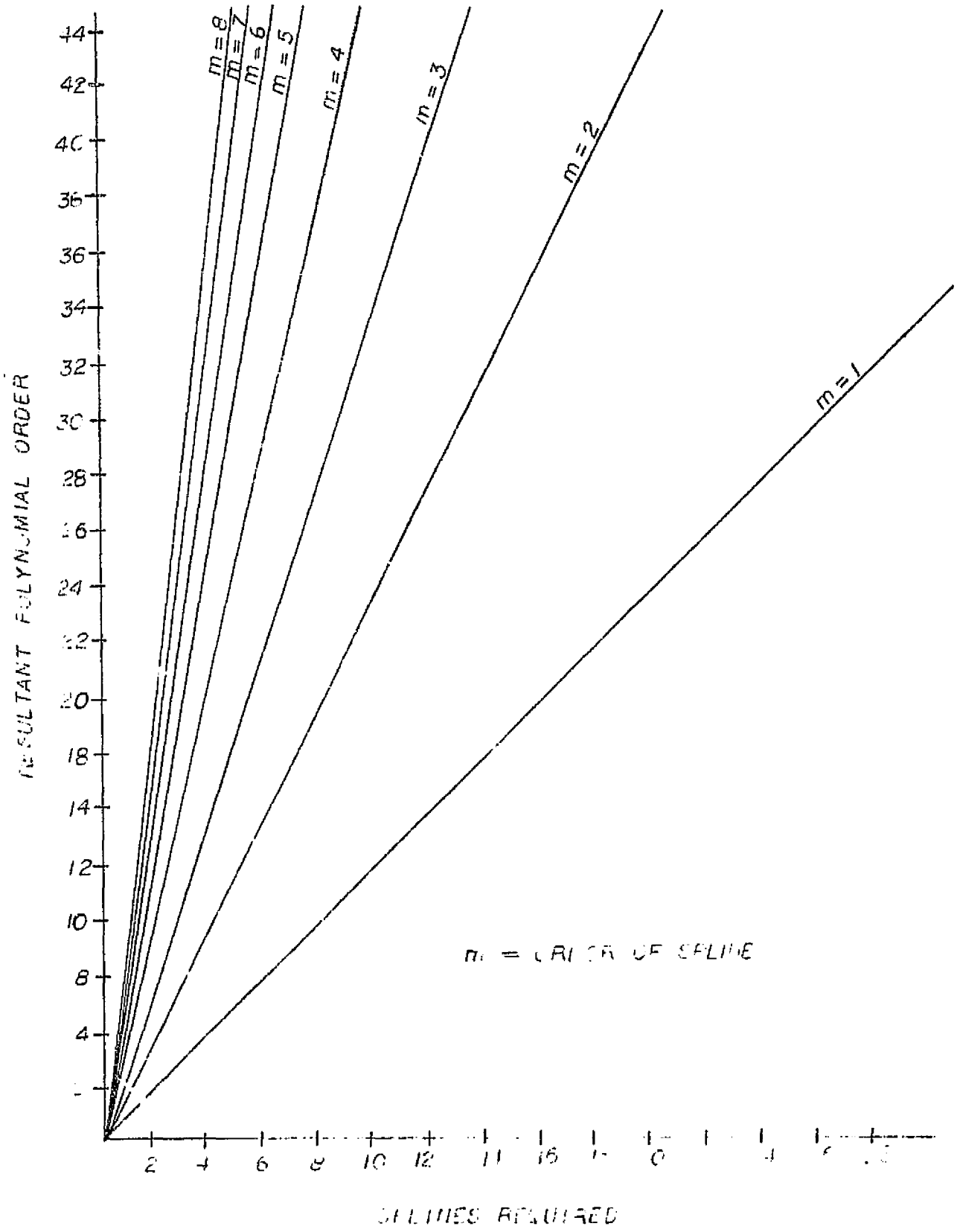
m = 8
m = 7
m = 6
m = 5
m = 4
m = 3
m = 2
m = 1
44
42
40
36
36
34
32
30
28
26
24
22
20
18
14
12
10
8
4
2
4
6
8
10
12
16
RESULTANT POLYNOMIAL ORDER
m = ORDER OF SPLINE
SPLINES REQUIRED

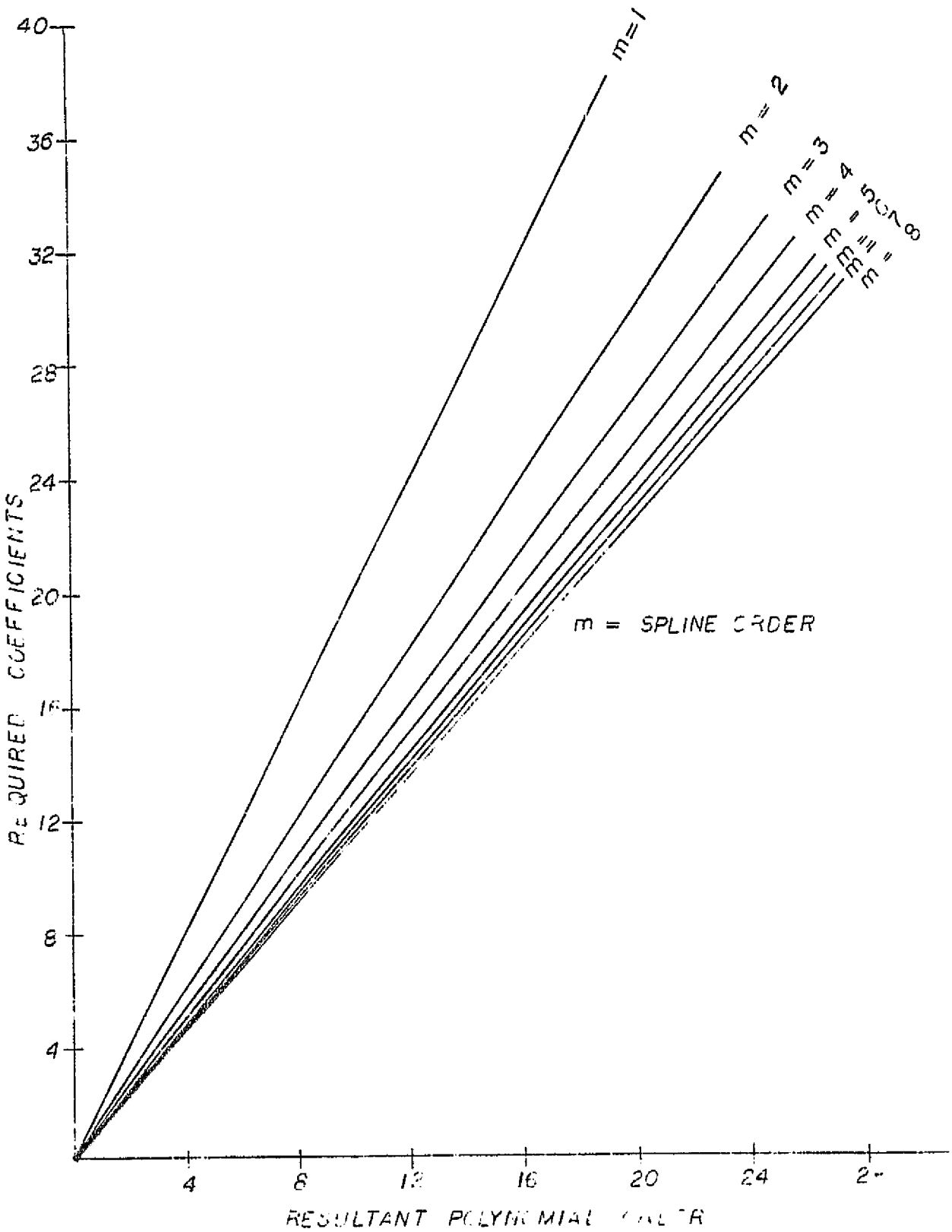

40
36
32
28
24
20
16
12
8
4
REQUIRED COEFFICIENTS
m=1
m = 2
m = 3
m = 4
m = 5 or 6
m = 7
m = 8
m = SPLINE ORDER
4
8
12
16
20
24
RESULTANT POLYNOMIAL ORDER

FIGURE C- 2

SPLINE ORDER	REQUIREMENTS FOR N TH ORDER POLYNOMIAL				
	COEFFICIENTS	ITERATIONS	ADDITIONS	MULTIPLIES	TABLE SIZE × N
1	2 N	N	1	1	48
2	$\frac{3N}{2}$	$\frac{N}{2}$	2	2	32
3	$\frac{4N}{3}$	$\frac{N}{3}$	3	3	26.67
4	$\frac{5N}{4}$	$\frac{N}{4}$	4	4	24.0
5	$\frac{6N}{5}$	$\frac{N}{5}$	5	5	22.4
6	$\frac{7N}{6}$	$\frac{N}{6}$	6	6	21.33
7	$\frac{8N}{7}$	$\frac{N}{7}$	7	7	20.57
8	$\frac{9N}{8}$	$\frac{N}{8}$	8	8	20.0
m	$\frac{m+1\ N}{m}$	$\frac{N}{m}$	m	m	$\frac{32 + 16m}{m}$

SPLINE CHARACTERISTICS

TABLE C-2

eq. (15) $$P_0^N(x) = P_0^N(x^m)$$

For i = 1

eq. (16) $$P_1^N(x) = P_1^N(x^m) * P_0^N(x^m)$$

so that substitution of equation 15 yields

eq. (17) $$P_1^N(x) = P_1^N(x^m) * P_0^N(x)$$

For i=2

eq. (18) $$P_2^N(x) = P_2^N(x^m) * P_1^N(x^m) * P_0^N(x^m)$$

so that substitution of equation 16 yields

eq. (19) $$P_2^N(x) = P_2^N(x^m) * P_1^N(x)$$

For i = 3

eq. (20) $$P_3^N(x) = P_3^N(x^m) * P_2^N(x^m) * P_1^N(x^m) * P_0^N(x^m)$$

so that substitution of equation 18 yields

eq. (21) $$P_3^N(x) = P_3^N(x^m) * P_2^N(x)$$

therefore for an arbitrary n^{th} order polynomial

eq. (22) $$P_n^N(x) = P_n^N(x^m) * P_{n-1}^N(x)$$

which is the basic equation that must be implemented. One argument is the spline based on the coefficients of the final term and the second argument is the resultant polynomial for order N - 1.

<u>Algorithm</u>:

Based on the foregoing discussion, the algorithm for realizing a a general order polynomial at the proceedural level is straightforward. Assume that the a spline of order m is employed and a resultant polynomial of order N is desired. Further, assume that the resultant polynomial is an initial condition that may be programmed in the feedback loop. Employing these assumptions, the following proceedure is required:

- Compute the value of the spline for the nth term of the polynomial

- Compute the product of the nth spline and the resultant polynomial for order $(n - 1)$
- Save the resultant value and place the truncated value in the feedback loop
- Determine if the desired order is achieved:
  - a. if $n \neq N/m$, repeat the process
  - b. if $n = N/m$, output the resultant value

This process requires N/m iterations of the basis function employing an organization shown in Figure C-3 and a general process flow shown in Figure C-4. Finally, the feasibility of the polynomial solution to information processing is dependent on the ability to implement the function and the resultant characteristics of the specific design.

Timing Aspects:

The periodicity of the argument establishes the requirement to compute an Nth order polynomial with basis functions within a specified time. Further, for multi-frequency sensors, this requirement is bounded by the upper value of the required bandwidth of operation. Initially, assume that a basic order may be computed within one machine cycle of the array processor. Let this machine cycle be configured in such a manner that the machine periodicity is either that of the argument or determined from an independent source such as an oscillator. The periodicity of the array will be defined as T_c . If the time required to compute a spline and the product of of this spline and the resultant polynomial for one order less than the spline term is defined as T_p . The number of iterations that must be achieved during one machine cycle is

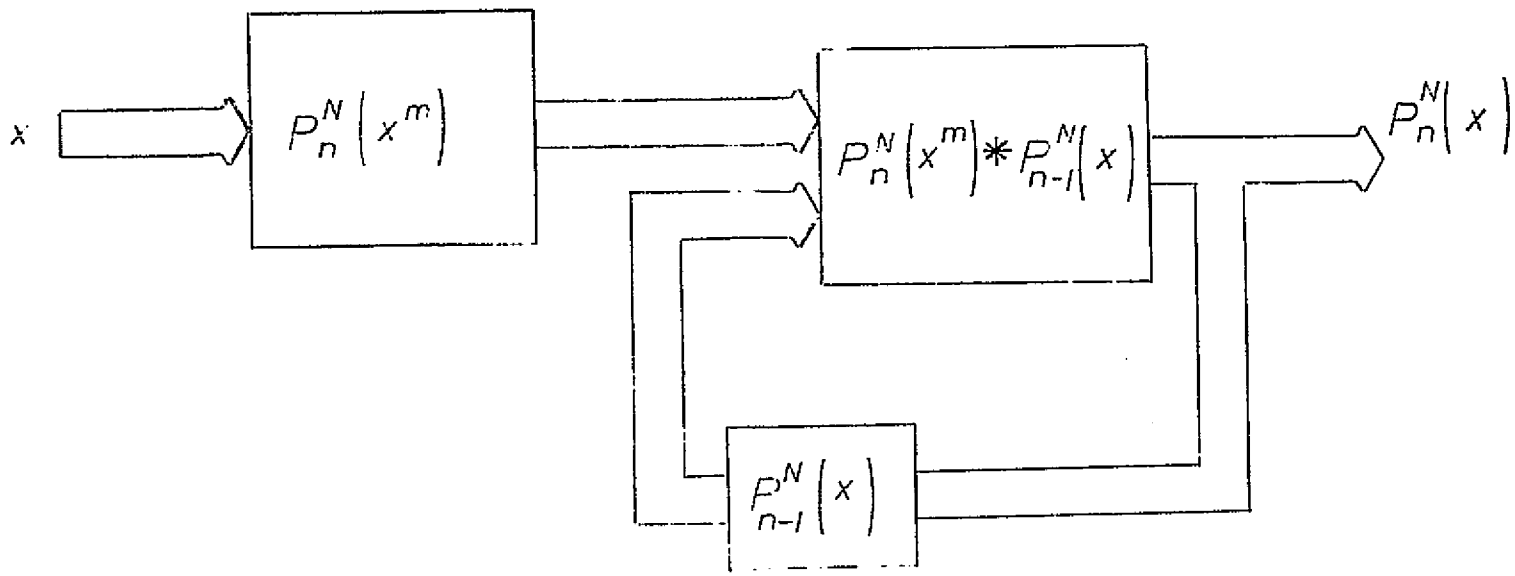

POLYNOMIAL GENERATION

FIGURE C-3

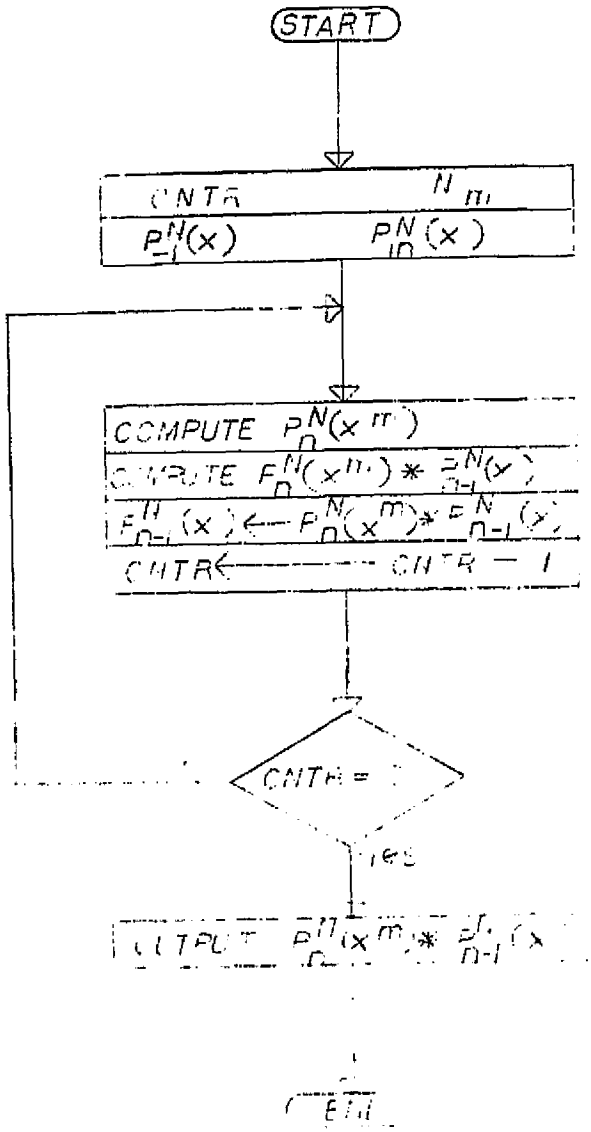
START
CNTR
N_m
$P_{-1}^N(x)$
$P_n^N(x)$
COMPUTE $P_n^N(x^m)$
COMPUTE $F_n^N(x^m) * P_{n-1}^N(x)$
$F_{n-1}^N(x) \leftarrow P_n^N(x^m) * F_{n-1}^N(x)$
CNTR ← CNTR − 1
CNTR =
YES
OUTPUT $P_n^N(x^m) * P_{n-1}^N(x)$
END

FIGURE C-4

eq. (23) $$n = T_c / T_p$$

where n = the iterations truncated to lower interger value

Consequently, if an m order spline is employed, the resultant polynomial that may be achieved during one machine cycle is

eq. (24) $$M = n * m$$

and the number of machine cycles required to achieve the desired order is

eq. (25) $$J = \frac{N}{M}$$

where J = the machine cycles truncated to higher integer value.

These constraints must be evaluated during the processing of a specific sensor to determine if the required bandwidth is maintained.

Hardware Implementation:

The functional block diagram for a hardware implementation is shown in Figure C-5. The organization is centered on a 16-bit argument and a second order spline. The spline coefficients are each 16-bits except for the bias coefficient which is 32-bits. This organization performs internal operations in double precision and provides a double precision value. The output value that is re-circulated via the feedback loop is truncated to 16-bits while the full 32-bit resultant is available at the output as two sequential machine words.

The circuit operates in the following manner: Let each iteration be concurrent with the machine state clock so that for

eq. (26) $$T_p(n) \longrightarrow T_p(n+1)$$

the following condition is achieved

eq. (27) $$P_n^{N}(x) \longrightarrow P_{n+1}^{N}(x)$$

During t_{r-1}, the coefficient table is addressed allowing the required coefficients for the nth term to be present at the input of the coefficient register prior

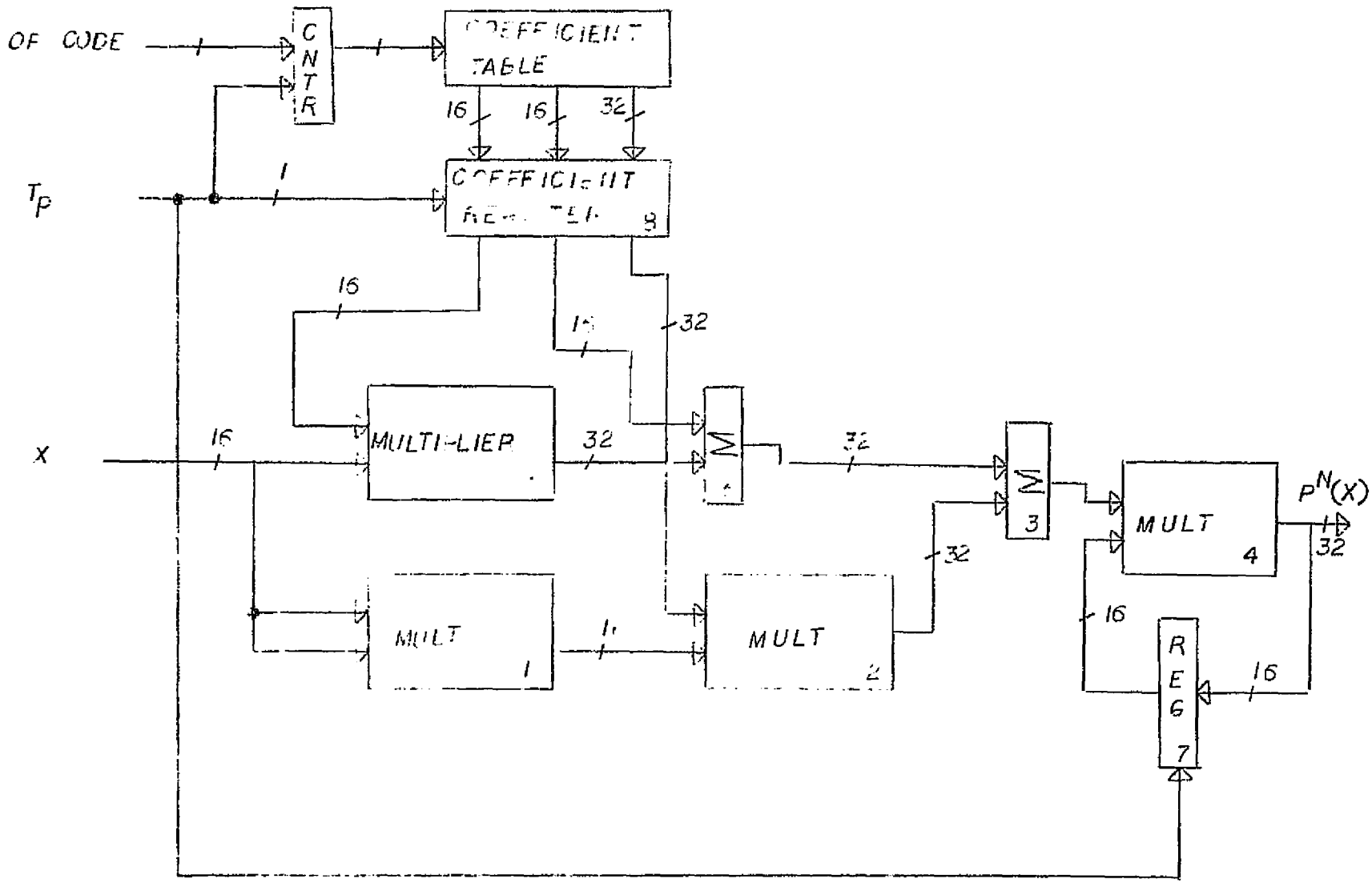

POLYNOMIAL FUNCTIONAL DIAGRAM
FIGURE C-5

REPRODUCIBILITY OF THE ORIGINAL PAGE IS POOR

to the leading edge of $T_p(n)$. At $T_p(n)$, the argument and the coeffficents, and $P^N_{n-1}(X)$ are clocked into the polynomial generator or computational portion of the circuit where the resultant polynomial is computed. On each succeeding state, the process is repeated until the final or output state is achieved. Therefore, the resultant polynomial may be any order in the following range

eq. (28) $$0 \leq P^N_n(X^m) \geq M$$

Based on the functional block diagram, the state diagram for this function is shown in Figure C-6 with the worst case path indicated. Employing the worst case path, the event time for this operation with N iterations is

eq. (29) $$E\left[P^N_N(X)\right] = (n-1)\,T_c + (n-1)\,T_p + \sum_{n=0}^{3} e_n + t_c$$

and for a single iteration as

eq. (30) $$E\left[P^N(X)\right] = (n-1)\,T_c + \sum_{n=0}^{3} e_n + t_c$$

The figure of merit for several iterations is extracted from equation 29 as

eq. (31) $$\gamma\left[P^N_N(X)\right] = (N-1)\,T_p + \sum_{n=0}^{3} e_n$$

and for a single iteration from equation 30 as

eq. (32) $$\gamma\left[P^N(X)\right] = \sum_{n=0}^{3} e_n$$

Employing conventional MSI and LSI technologies, this function would require approximately 85 integrated circuits for the word sizes indicated. The coefficient table is Random Access Memory and assuming not more than 8 iterations per machine cycle would require 512-bits. The organization of the table would be three groups of words i.e. 8 x 16, 8 x 16, and 8 x 32. For n iterations, the configuration would be n x 16, n x 16, and n x 32 for a total of n x 64 bits which is realistic for the polynomial orders considered. For example, if 32 iterations are required, only 2048 bits would be required for the table capacity.

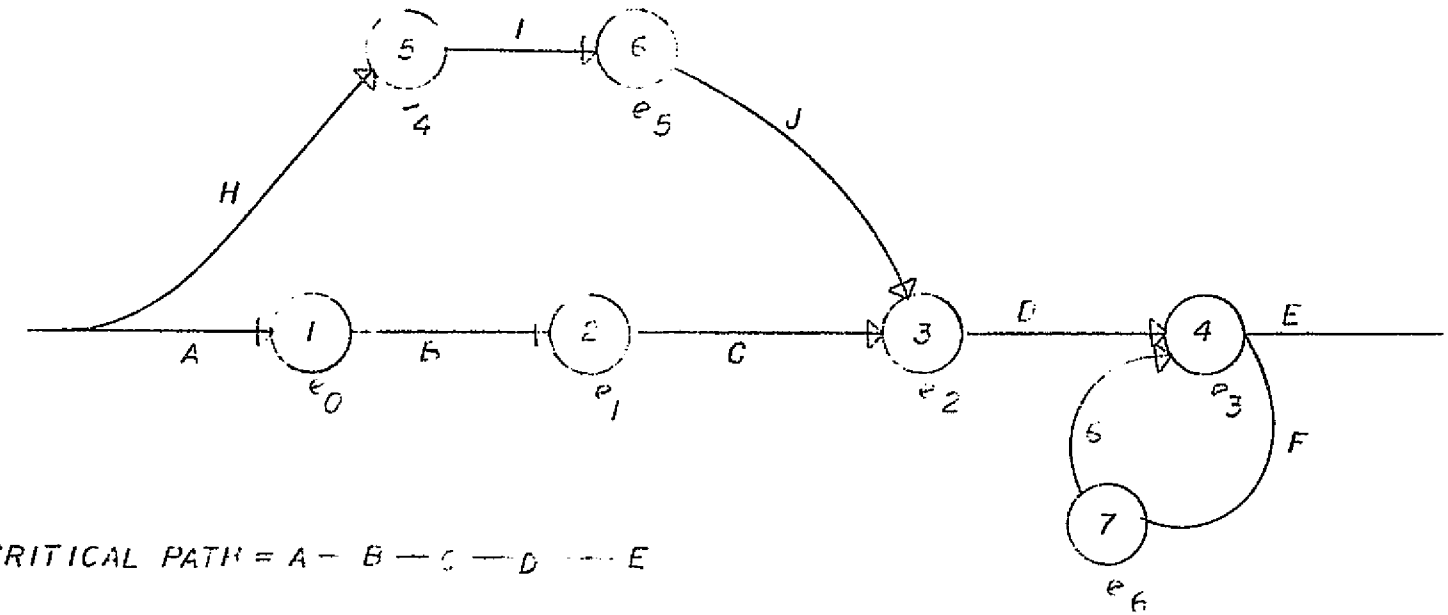

CRITICAL PATH = A — B — C — D — E

STATE DIAGRAM

FIGURE C-6

Software Implementation:

Based on the subroutines listed in Appendix A, the software implementation benchmarked on an 8080A microcomputer is shown in Figure C-7. This microcomputer would require approximately 100 MSI/LSI integrated circuits. The execution time for a software implementation is

eq. (33) $T_F = \left(434 + I * 1332.5\right) \mu sec$

and the computer loading is

eq. (34) $L = 447$ BYTES PLUS COEFFICIENT TABLE

The characteristics for each implementation are listed in Table C-3.

SOFTWARE POLYNOMIAL IMPLEMENTATION

TITLE: POLY

LOADING = 447 BYTES

TIME = 434 + I·1332.5 μsec

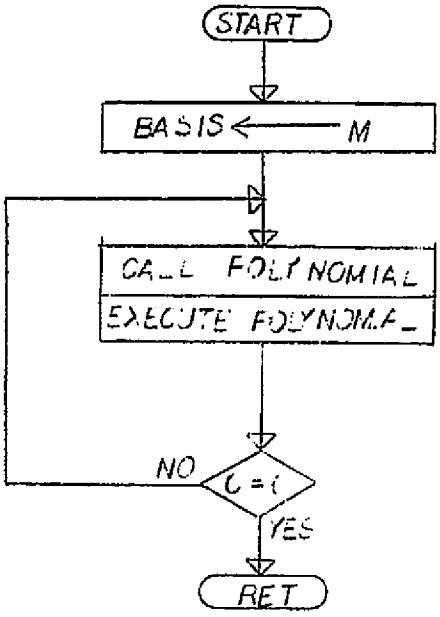

FIGURE C- 7

PARAMETER	H/W	S/W
f_{max} n=1	1.20 MHz	556.09 Hz
f_{max} n=8	0.15 MHz	90.13 Hz
PRECISION	32 BITS	32 BITS
TABLE SIZE/N m=2	32 BITS	32 BITS
PROGRAM	C	447 BYTES
CLOCK PHASES	1	2
POWER AVE.	11.383 W	12.5 W
VOLUME	0.0258 cu. ft.	0.0216 cu. ft.
WEIGHT	0.5 LB	1 LB
[illegible]	85	[illegible]

IMPLEMENTATION CHARACTERISTICS

TABLE C-3

ONBOARD EXPERIMENT DATA SUPPORT FACILITY
CONCEPTUAL DESIGN SUMMARY

1.0 Introduction

This design summary establishes the requirements for the performance, interface, design, quality assurance/reliability and safety of an Onboard Experiment Data Support Facility (OEDSF).

The purpose of the Onboard Experiment Data Support Facility is to process multiple sensor payloads data onboard the space shuttle to alleviate the ever-increasing cost of present processing schemes and to provide users with useful information of improved quality on a timely basis. In addition, the OEDSF is capable of effecting a bandwidth reduction via processing whenever possible.

The OEDSF is configured to process multiple sensor outputs and the required ancillary data in real time or near real time. The facility is not restricted to any specific location or environment in the shuttle, and services instruments of multiple disciplines simultaneously.

2.0 Applicable Documents

The following documents form a part of this design summary to the extent specified herein. In the event of conflict between documents in reference herein and the detail design requirements in the following sections, the detail design requirements supersede. In the event of conflict between documents in reference herein and lower tier references to documents in reference herein, the former supersede.

National Aeronautics and Space Administration

JSC 07700, Volume XIV, Rev. D, Space Shuttle System Payload Accommodation, NASA JSC, November 26, 1975.

Spacelab Payload Accommodation Handbook, by NASA and European Space Research Organization, May, 1976.

Safety Policy and Requirements for Payloads Using the National Space Transportation System, NASA Headquarters, Code MQ, June 1976.

MIL-E-6051D (as amended for Space Shuttle Program), Electromagnetic Compatibility Requirement, Systems, June 4, 1973.

MIL-STD-461A (as amended for Space Shuttle Program), Electromagnetic Interference Characteristics, June 4, 1973.

S-311-P-11 Quality Monitoring of Integrated Circuits, 1 June 1970

S-323-P-10 Commectors, Subminiature Electrical and Coaxial Contacts for Space Flight Use, Revised December 1969.

NHB 5300.4(3A)	Requirements for Soldered Electrical Connections	May 1968
NHB 5300.4(1A)	Reliability Program Provisions for Space Systems Contractors	
NHB 5300.4(1B)	Quality Assurance Program Provisions for Space Systems Contractors	

Military

MIL-C-38999	Connectors, Electrical, Miniature, Quick Disconnect, Est. Reliability
MIL-C-29012A	Connectors, Coaxial, RF, General Specificztion for
MIL-C-26482	Connectors, Electric, Circular, Miniature, Quick Disconnect
MIL-C-17	Cables, RF, Coaxial, Dual Coaxial, Twin Conductors, Twin Lead
MIL-W-18044	Wire, Electric Cross-linked, Polyalkene, Insulated, Copper
MIL-E-5400K	Electronic Equipment, Airborne, General Specification for
MS33540C	Safety Wiring, General Practices
MIL-STD-454B	Standard General Requirements for Electronic Equipment
MIL-STD-143A	Specification and Standards, Order of Precedence for Selection of, Change 1
MS-33586A	Metals, Definition of Dissimilar

3.0 Technical Requirements

3.1 Functional Performance

The basic OEDSF is capable of receiving multiple sensor inputs in real time and processing the data to a specified level within the desired accuracy; i.e., multiple precision. The data inputs and outputs are asynchronously related to the OEDSF clock and are processed simultaneously without any form of off-line storage. Limited data buffers as required by the internal processing are provided.

The OEDSF is readily reprogrammable to service different sets of sensors every two weeks.

The Onboard Experiment Data Support Facility possesses a growth potential and system efficiency through modularity. The OEDSF is a modular and programmable processor capable of being cascaded in depth and width without degradation of electrical parameters or throughput.

The OEDSF is supplied 28 volts d.c. to 32 volts d.c. unregulated power 150 watts average for each array. The peak power requirement for the OEDSF does not exceed 180 watts.

Thermal control of the OEDSF is by: (1) passive means such as thermal coatings, insulation, isolation and heat sink action of the OEDSF structures in conjunction with cold plates; and (2) by means of using built-in blowers and suitable gas; i.e., nitrogen.

The OEDSF is capable of being fully configured and checked out 24 hours prior to launch before being installed in the Orbiter Processing Facility (OPF).

3.2 Data Processing Capabilities

The OEDSF is a wideband high speed programmable processor configured as a centralized facility capable of accommodating multiple sensor inputs from varied disciplines. The processor is capable of receiving sensor data asynchronously and transmitting data synchronously with the input.

The OEDSF is capable of operating on sensors with a bandwidth of from a few bits per second to 120 megabits per second. It is capable of processing simultaneously the data of 20 average sensors and required ancillary data sources where the processing requirements of an average sensor are as shown in table 1. The OEDSF performs 10^8 operations for second as defined in tables 2, 3, and 4. The processor operates in real time without off-line storage.

PARAMETER	CHARACTERISTIC
Frequency	190 Kilobits per second
Arithmetic Processes	1160 per word
Trigonometric Processes	250 per word
Exponential Processes	40 per word
Number of Channels	10
Word Size (Bits)	12
Buffer Size (Bits)	93K
Memory Size (Bits)	131K

Table 1

Typical arithmetic processes are shown in Table 2.

$X+Y$	$\Sigma(X+Y)$
$X-Y$	$\Sigma(X-Y)$
$X \cdot Y$	$\Sigma(X \cdot Y)$
$X \cdot Y^{-1}$	$\Sigma(X \cdot Y^{-1})$
$X \cdot Y^{\pm 1} \pm Z$	$\Sigma(X \cdot Y^{\pm 1} \pm Z)$

Table 2

Required trigonometric processes are shown in Table 3.

Sin X	Sin^{-1} X
Cos X	Cos^{-1} X
Tan X	Tan^{-1} X
Cot X	Cot^{-1} X
Sec X	Sec^{-1} X
Csc X	Csc^{-1} X

Table 3

Required exponential processes are shown in Table 4.

ln X	e^x
y ln X	ye^x
	x^y

Table 4

The OEDSF is capable of processing 16 bit words with fixed point arithmetic in either one's complement or two's complement convention and at multiple precision.

The OEDSF is characterized by a modular memory with the basic module capacity determined by Table 1.

Signal Inputs. The OEDSF is capable of receiving positively asserted digital information and negatively asserted digital control signals in a bit serial/word sequential format. The system is not capable of receiving analog signals or converting these signals from the analog to digital domain.

Signal Outputs. The sytem outputs digital information synchronously with the input data in either word sequential/bit serial, word interleaved/bit serial, word sequential/bit parallel or word interleaved/bit parallel format with positive assertion.

Signal Assertion.

Positive Assertion	
Logical "one"	2.4 Volts to V_{cc}
Logical "zero"	0.2 Volts to 0.8 Volts
Negative Assertion	
Logical "one"	0.2 Volts to 0.8 Volts
Logical "zero"	2.4 Volts to V_{cc}

3.3 Power Supply

The required power supply is provided as an integral part of the Onboard Experiment Data Support Facility. The power supply is a multiple output supply capable of accepting 28V d.c. to 32V d.c. with a peak power dissipation of 180 watts.

The power supply provides the voltage regulation, EMI filtering, and power distribution for the OEDSF.

Harness interfaces for the Power Supply Subsystem are provided by the structures Subsystem for routing and mounting the spacecraft harness.

3.4 Thermal Control

Thermal Control Provisions maintains specified temperature levels and gradients for the OEDSF modules during all mission phases including pre-launch, launch, orbit, re-entry, and post landing.

The OEDSF maintains component temperatures from $+5^{o}C$ to $+35^{o}C$ with a maximum average power dissipation of 150 watts.

The OEDSF possesses thermal control provisions independent of the Shuttle except for energy to operate heaters. The subsystem is composed of both passive and active components as required.

3.5 Mechanical Design

The OEDSF is designed to withstand the following mechanical environments:

Stiffness. The structures subsystem provides adequate stiffness to satisfy the minimum frequency requirements.

Strength. The structures subsystem is designed to the qualification level quasisteady state accelerations of Table 5. Subsequent dynamic analyses will determine payload responses to the qualification vibration input test levels of Table 6.

Acoustic. The structures subsystem is designed to the acoustic levels shown in Table 7.

Shock. The structures subsystem is designed to the levels stated in the Space Shuttle System Payload Accommodations Document JSC-07700, VI, XIV.

Table 5. Qualification Level Quasi-Steady State Accelerations

Shuttle Mode	Longitudinal (g's)	Lateral (g's)
Lift Off	-3.45	±2.25
Orbiter End Burn	-4.95	-1.12
Entry	1.56	3.75
Landing	±1.50	4.2
Crash (Forward)	+9.0	+4.5
(Aft)	-1.5	-2.0

Table 6. Sinsusoidal and Random Vibrations

Sinusoidal Vibrations (g's)		Random Vibrations (g's)			
		Frequency	PSD (g^2/Hz)	G_{RMS}	Time (Sec)
Longitudinal TBD	Lateral TBD	20 - 78 78 - 300 300 - 2000	+3 dB/oct .11 dB/oct -3 dB/oct	9.45*	29*

*Levels under investigation and may be adjusted upward.

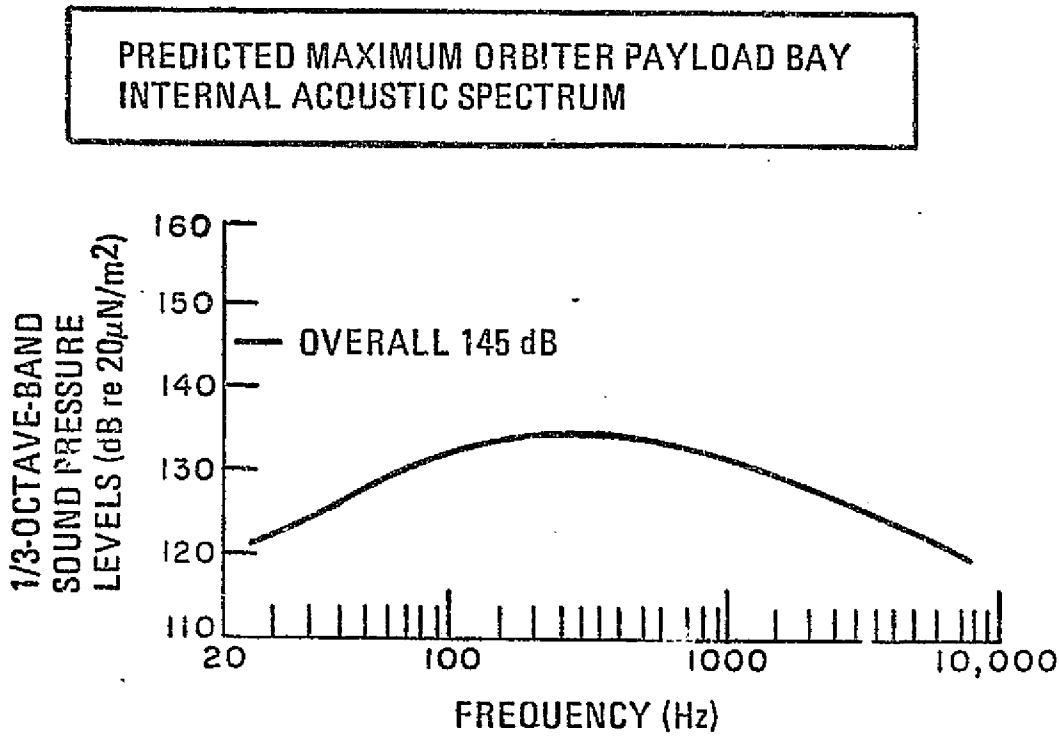

Table 7 Internal Payload Bay Noise Estimates

Ground Handling Transportation, and Storage. The structural design includes consideration of all environments to which the structure and its component parts are exposed during manufacture, ground handling, transportation and storage as stated in the Space Shuttle System Payloads Accommodations. Document JSC 07700, Vol. XIV. The OEDSF AGE is designed to support the OEDSF flight structure so as to preclude ground conditions from governing design of the flight hardware.

Factors of Safety. The design load factors of safety shown in Table 8 shall be applied to qualification loads presented in Table 5 to obtain the structural design yield and design ultimate loads.

Margins of Safety. The structures subsystem shall maintain the minimum design margins of safety presented in Table 9.

Margins of Safety less than 2.0 shall be indicated numerically. Those greater than 2.0 shall be listed as high.

The structure subsystem will be designed to mechanically interface with the following associated Aerospace Ground Equipment (AGE) and auxilliary Aerospace Equipment (AAE); (TBD).

Table 8 Design Load Factors of Safety

Load Condition	Design Load Factors of Safety	
	Yield	Ultimate
Launch (qualification level)	1.5	2.0
Orbital (qualification level)	1.5	2.0
System Qualification Test	1.5	2.0
Transportation, Handling	1.5	2.0

Table 9. Margins of Safety

Item	Margins of Safety
Fasteners in Shear	+.15
Bolts in Tension	+.50
Fittings	+.15
Lugs	+.25
Welds-Electron Beam	+.15
Welds-Other	+.50 (Dependent on Inspection Procedure)
Bonded Joints	+.50

C4