General Disclaimer

One or more of the Following Statements may affect this Document

- This document has been reproduced from the best copy furnished by the organizational source. It is being released in the interest of making available as much information as possible.

- This document may contain data, which exceeds the sheet parameters. It was furnished in this condition by the organizational source and is the best copy available.

- This document may contain tone-on-tone or color graphs, charts and/or pictures, which have been reproduced in black and white.

- This document is paginated as submitted by the original source.

- Portions of this document are not fully legible due to the historical nature of some of the material. However, it is the best reproduction available from the original submission.

Produced by the NASA Center for Aerospace Information (CASI)

NASA TECHNICAL MEMORANDUM

NASA TM X-73349

(NASA-TM-X-73349-Vol-2) SPACELAB EXPERIMENT COMPUTER STUDY. VOLUME 2: STUDY ELEMENTS AND APPROACH (NASA) 185 p HC A09/MF A01 CSCL 22B

N77-13098

Unclas

G3/15 56998

SPACELAB EXPERIMENT COMPUTER STUDY
Vol II: Study Elements and Approach

By James L. Lewis, Bobby C. Hodges, and James O. Christy
Data Systems Laboratory

April 1976

DEC 1976
RECEIVED
NASA STI FACILITY
INPUT BRANCH

NASA

George C. Marshall Space Flight Center
Marshall Space Flight Center, Alabama

TECHNICAL REPORT STANDARD TITLE PAGE

1. REPORT NO. NASA TM X-73349	2. GOVERNMENT ACCESSION NO.	3. RECIPIENT'S CATALOG NO.
4. TITLE AND SUBTITLE SPACELAB EXPERIMENT COMPUTER STUDY Volume II: Study Elements and Approach		5. REPORT DATE April 1976
		6. PERFORMING ORGANIZATION CODE
7. AUTHOR(S) James L. Lewis, Bobby C. Hodges, and James O. Christy		8. PERFORMING ORGANIZATION REPORT #
9. PERFORMING ORGANIZATION NAME AND ADDRESS George C. Marshall Space Flight Center Marshall Space Flight Center, Alabama 35812		10. WORK UNIT NO.
		11. CONTRACT OR GRANT NO.
12. SPONSORING AGENCY NAME AND ADDRESS National Aeronautics and Space Administration Washington, D. C. 20546		13. TYPE OF REPORT & PERIOD COVERED Technical Memorandum
		14. SPONSORING AGENCY CODE

15. SUPPLEMENTARY NOTES

This is Volume II of five volumes.

16. ABSTRACT

The purpose of this study was to provide a quantitative cost for various Spacelab flight hardware configurations, along with varied software development options. The three major conclusions reached as a result of this study are as follows:

1. Spacelab program cost for software development and maintenance is independent of experimental hardware and software options.

2. Distributed standard computer concept simplifies software integration without a significant increase in cost.

3. Decision on flight computer hardware configuration should not be made until payload selection for a given mission and a detailed analysis of the mission requirements are completed.

This report is published in five volumes: Volume I contains the Executive Summary (Presentation); Volume II, Study Elements and Approach; Volume III, Spacelab Cost Data; Volume IV, Spacelab User Cost Data (Central Experiment Computer); and Volume V, Spacelab User Cost Data (Distributed Computer).

This is Volume II: Study Elements and Approach.

17. KEY WORDS	18. DISTRIBUTION STATEMENT Unclassified-Unlimited

19. SECURITY CLASSIF. (of this report)	20. SECURITY CLASSIF. (of this page)	21. NO. OF PAGES	22. PRICE
Unclassified	Unclassified	177	NTIS

MSFC - Form 3292 (Rev December 1972) For sale by National Technical Information Service, Springfield, Virginia 22151

SPACELAB EXPERIMENT COMPUTER STUDY

TABLE OF CONTENTS

VOLUME I EXECUTIVE SUMMARY

Presentation Charts - April 1976
Backup Charts - April 1976

VOLUME II STUDY ELEMENTS AND APPROACH

Section 1 Introduction

Section 2 Groundrules and Assumptions

Section 3 Options and Cost Elements

A. Options
B. Cost Elements

Section 4 Summary of Software Requirements Analysis Study

Section 5 Cost Analysis

A. Spacelab Costs
B. Spacelab User Costs

Section 6 Cost Data Matrix

Section 7 Costing Rationale

A. Minicomputers
B. Computer Interface Device (CID) and Real Time Simulation Test Set (RTSTS)
C. Costs Per Statement/Costs Per Instruction
D. Software Sizing
E. Central Experiment Computer Functions
F. Consumable Stock
G. Central Site Computer Additions
H. Equipment Maintenance
I. Miscellaneous Supporting Data

VOLUME III SPACELAB COST DATA

Section 1. Costing Method
Section 2. Cost Data

VOLUME IV SPACELAB USER COST DATA (CENTRAL EXPERIMENT COMPUTER)

Section 1. Option IA1 - Central With Mini, Central Software Development by Central Group.

1.1 Costing Method
1.2 Cost Data

Section 2. Option IA2A - Central With Mini, Central Software Development by PI at Central Facility.

2.1 Costing Method
2.2 Cost Data

Section 3. Option IA2B - Central With Mini, Central Software Development by PI at Central Facility Remote.

3.1 Costing Method
3.2 Cost Data

Section 4. Option IA3A - Central With Mini, Software Development by PI at His Facility. Real Time Simulation at Central Facility.

4.1 Costing Method
4.2 Cost Data

Section 5. Option IA3B - Central With Mini, Software Development by PI at His Facility. Real Time Simulation at His Facility for DEP.

5.1 Costing Method
5.2 Cost Data

Section 6. Option IA4 - Central With Mini, Software Development by PI at His Facility. Not Compatible With Central Facility (This Option Not Included - Excessive Cost).

6.1 Costing Method
6.2 Cost Data

Section 7. Option IB1 - Central with Standard Mini, Central Software Development by Central Group.

7.1 Costing Method
7.2 Cost Data

Section 8. Option IB2A - Central With Standard Mini, Central Software Development by PI at Central Facility Local.

8.1 Costing Method
8.2 Cost Data

Section 9. Option IB2B - Central With Standard Mini, Central Software Development by PI at Central Facility Remote.

9.1 Costing Method
9.2 Cost Data

Section 10. Option IB3A - Central With Standard Mini, Software Development by PI on His Facility. Real Time Simulation at Central Facility.

10.1 Costing Method
10.2 Cost Data

Section 11. Option IB3B - Central With Standard Mini, Software Development by PI on His Facility. Real Time Simulation at His Facility.

11.1 Costing Method
11.2 Cost Data

Section 12. Option IB4 - Central With Standard Mini, Software Development by PI at His Facility. Not Compatible with Central Facility (This Option not included - Excessive Cost).

12.1 Costing Method
12.2 Cost Data

Section 13. Option IC1 - Central No Mini, Central Software Development Central Group.

13.1 Costing Method
13.2 Cost Data

Section 14. Option IC2A - Central No Mini, Central Software Development by PI at Central Facility Local.

14.1 Costing Method
14.2 Cost Data

Section 15. Option IC2B - Central No Mini, Central Software Development by PI at Central Facility Remote.

15.1 Costing Method
15.2 Cost Data

Section 16. Option IC3A - Central No Mini, Software Development by PI at His Facility. Real Time Simulation at Central Facility.

16.1 Costing Method
16.2 Cost Data

Section 17. Option IC3B - Central No Mini, Software Development by PI at His Facility. Real Time Simulation at His Facility.

17.1 Costing Method
17.2 Cost Data

Section 18. Option 1C4 - Central No Mini Software Development by PI at His Facility. Not Compatible with Central Facility (This Option Not Included - Excessive Cost).

18.1 Costing Method
18.2 Cost Data

VOLUME V SPACELAB USER COST DATA (DISTRIBUTED COMPUTER)

Section 1. Option IIA1 - Distributed Non-Standard Mini, Central Software Development by Central Group. (Not Priced - Option Not Feasible).

1.1 Costing Method
1.2 Cost Data

Section 2. Option IIA2A - Distributed Non-Standard Mini, Central Software Development by PI at Central Facility Local. (Not Priced - Option Not Feasible).

2.1 Costing Method
2.2 Cost Data

Section 3. Option IIA2B - Distributed Non-Standard Mini, Central Software Development by PI at Central Facility Remote. (Not Priced - Option Not Feasible).

3.1 Costing Method
3.2 Cost Data

Section 4. Option IIA3A - Distributed Non-Standard Mini, Software Development by PI at His Facility. Real Time Simulation Testing at Central Facility. (Not Priced - Option Not Feasible).

4.1 Costing Method
4.2 Cost Data

Section 5. Option IIA3B - Distributed Non-Standard Mini, Software Development by PI at His Facility. Real Time Simulation Testing on RTSTS. (Not Priced - Option Not Feasible).

5.1 Costing Method
5.2 Cost Data

Section 6. Option IIA4 - Distributed Non-Standard Mini, Software Development by PI at His Facility. Not compatible with Central Facility.

6.1 Costing Method
6.2 Cost Data

Section 7. Option IIB1 - Distributed Standard Mini. Central Software Development by Central Group.

7.1 Costing Method
7.2 Cost Data

Section 8. Option IIB2A - Distributed Standard Mini, Central Software Development by PI at Central Facility Local.

8.1 Costing Method
8.2 Cost Data

Section 9. Option IIB2B - Distributed Standard Mini, Central Software Development by PI at Central Facility Remote.

9.1 Costing Method
9.2 Cost Data

Section 10. Option IIB3A - Distributed Standard Mini, Software Development by PI at His Facility. Real Time Simulation Testing at Central Facility.

10.1 Costing Method
10.2 Cost Data

Section 11. Option IIB3B - Distributed Standard Mini, Software Development by PI at His Facility. Real Time Simulation at His Facility.

11.1 Costing Method
11.2 Cost Data

Section 12. Option IIB4 - Distributed Standard Mini, Software Development by PI at His Facility. Not Compatible With Central Facility. (Same as Option IIB3B)

12.1 Costing Method
12.2 Cost Data

Section 13. Option IIB3B (Variation I)

13.1 Costing Method
13.2 Cost Data

Section 14. Option IIB3B (Variation II)

14.1 Costing Method
14.2 Costing Data

Technical Memorandum X-73349

SPACELAB EXPERIMENT COMPUTER STUDY

VOLUME II STUDY ELEMENTS AND APPROACH

SECTION 1 Introduction

This study was initiated by Mr. John F. Yardley, NASA Headquarters, and was to be conducted as outlined in a letter to "Marshall Space Flight Center, Attn: NA01/Manager, Spacelab Program Office" dated December 23, 1975, and signed by Mr. Douglas R. Lord, MF/Director, Spacelab Program. Response was made to this request, as a result of a telecon from Mr. John Yardley to Mr. Richard G. Smith, DD01, in the form of the letter NA01, dated January 19, 1976, signed by Mr. Richard G. Smith.

The purpose of this study was to provide quantitative cost data with respect to implementation of various centralized and distributed on-board computer configurations and with respect to various software development options.

Section 2 of this report details the groundrules and assumptions used in deriving the costing methods for all options.

Section 3 of this report contains a matrix definition of all options considered and the cost elements considered for each option.

Section 4 of this report provides a summary of the software requirements data generated by General Dynamics, Contract NAS8-29462, Report No. CASD-NAS-76-010.

Section 5 of this report contains a definition of the cost factors considered for each identified cost element.

Section 6 of this report contains a matrix of parameters that were generated from the data bases, assumptions, and mission model. References to this numbered matrix are made in Volume III of this set, where the costing methods and algorithms are specified.

Section 7 of this report contains the rationale for assumptions and groundrules used and the back-up data for derived parameters used in the costing methods specified in Volume III of this set.

SECTION 2 Ground Rules and Assumptions

The following pages contain a description of the major groundrules and assumptions established at the inception of the study and subsequently refined and added to during the course of the study.

GROUND RULES/ASSUMPTION

SPACELAB COMPUTER STUDY 1/20/76

- REVISION 2 -

2/25/76

HOST COMPUTER

1 - A Central HOST facility (STIL) is required in either the centralized or distributed CDMS approach for maintenance and distribution of ESA delivered software.

2 - The HOST computer will maintain the capability to support EAS development.

3 - A basic complement of CDMS hardware will be available for use in a real time software verification configuration at STIL.

4 - The STIL configuration is as defined by MSFC/M&S/CSC/IBM studies and documented in M&S final report.

5 - No conversion effort is required for implementation of ESA supplied, IBM 370 generated software on the IBM 360/65.

COMMAND AND DATA MANAGEMENT SUBSYSTEM (CDMS)

1 - A central onboard experiment computer is required even if the distributed computing approach is adopted.

2 - When allocating software functions for the onboard central experiment computer and distributed computer(s):

- Centralize and standardize those functions most likely to be shared by a large number of experiments.
- Centralize and standardize mission independent functions.
- Decentralize experiment dependent functions.

3 - The Central Experiment Computer operating system overhead is estimated to be 15% in terms of computer speed.*

4 - The Central Experiment Computer operating system is estimated to require 20,000 16 bit words of memory.

5 - The characteristics of the computer, mass memory, data bus and RAU and display are:

- CPU Cycle Time:	830 nsec
- CPU Add Time:	1.8 μsec - 2.4 μsec (fixed point)
- Main Memory Capacity:	64,000 words
- Word Size:	16 bits
- Mass Storage Capacity:	134×10^6 bits (tape)
- Data Bus Rate:	1 Mbps

6 - The contingency/growth margin for processor speed is 20%.

7 - Enough RAU's are available in Spacelab to support any mission.

8 - Based on previously identified operational requirements, it is assumed that the CDMS baseline includes read/write, high speed, random access memory, and data bus modifications adding digital I/O capability.

---

* M&S Computing, Inc., historical data indicates typical real time operating system overhead range for minicomputers to be 5 - 25%. M&S estimates 15% for the CDMS Experiments Computer operating system.

COSTS

SPACELAB COST ELEMENTS

1 - CDMS

- Hardware Modifications
- Subsystems Computer Software Development and Acceptance
- Subsystems Computer Software Maintenance
- Subsystems Computer Software Management, Release, and Distribution
- Experiment Computer Software Development and Acceptance
- Experiment Computer Software Maintenance
- Experiment Computer Software Configuration Management, Release, and Distribution

2 - EGSE

- Hardware Modifications
- Ground Checkout Software Development and Acceptance
- Ground Checkout Software Maintenance
- Ground Checkout Software Configuration Management, Release, and Distribution
- EGSE Computer Software Production Set Development and Acceptance
- EGSE Computer Software Production Set Maintenance
- EGSE Computer Software Production Set Configuration Management, Release, and Distribution

3 - STIL

- Facility Acquisition
- Facility Operation and Maintenance
- Host and Simulation Computer Support Software Development and Acceptance
- Host and Simulation Computer Support Software Maintenance and Distribution

SPACELAB USER COST ELEMENTS

1 - Experiment

- Experiment Application Software Development
- Experiment Application Software Maintenance
- Experiment Application Software Integrated Verification
- Experiment Pre-Flight Checkout Software Development
- Experiment Pre-Flight Checkout Software Maintenance
- Experiment Application Dependent STIL Hardware Supplement
- Experiment Application Dependent STIL Software Supplement
- Experiment Real Time Simulation Software Development
- Experiment Real Time Simulation Software Maintenance

2 - Dedicated Experiment Processor (DEP)

- Experiment Processor Acquisition
- Experiment Processor Maintenance and Distribution
- DEP Software Development and Procurement
- DEP Software Maintenance and Distribution

3 - Real Time Simulation Test Set (RTSTS)

- RTSTS Acquisition
- RTSTS Maintenance, Operation, and Distribution
- RTSTS Support Software Development and Procurement
- RTSTS Support Software Maintenance and Distribution

4 - PI Host Computer

COSTING GROUNDRULES

1 - The cost for an EAS HOL statement is $60 for the Central Computer - includes requirements analysis, coding, and verification. **

2 - The cost for an EAS HOL statement is $45 for the mini-computer in the distributed approach - includes requirements analysis, coding, and verification. (The difference is in integrated verification and documentation). **

3 - Escalation costs are 7% annually.

4 - Use the May 23, 1975, Sortie Mission Model (226 Flights).

5 - One HOL statement, when compiled, results in an average of 5 computer instructions.

6 - One man year of software development equates to $50,000 in FY76.

7 - The requirements will drive the costing options considered; that is, requirements will not be reduced to eliminate hardware/software necessary to support these requirements.

8 - A PI's use of his own HOST computer for EAS development involves the following cost factors (where applicable):

- HOST computer time rental.
- Development of the flight minicomputer support software (assembler, link editor, compilers, etc.) to execute on the HOST computer.
- Maintenance of the minicomputer support software.

9 - The checkout software for the distributed computers will be the same software for Spacelab Integration Levels 4, 3, and 2.

** Current engineering judgement is that much of the EAS software will probably be written in assembly language.

10 - The checkout software for the CDMS computers (subsystem and experiment) will be mission independent and will not require changes, other than sustaining engineering changes, from mission to mission.

11 - The baseline option for costing is:

- Emphasis on centralized on-board computing;
- No experiment dedicated flight minicomputer if possible, or the use of non-standard minicomputers if they are required; and
- Centralized software development.

12 - Standard peripherals for a standard flight minicomputer will not be costed due to the assumption that CDMS computer peripherals will be used in a time shared manner.

13 - The non-standard flight minicomputers which are selected will have Fortran and assembler support software available which is executable on the STIL HOST or the RTSTS Simulation computers in the centralized, non-standard minicomputer option.

14 - Groundrule for set builds for Spacelab software deliveries to Level 3:

- 3 set builds for the first 2 flights
- 2 set builds for the next 4 flights
- 1 set build per flight thereafter

15 - Each PI developing EAS independent of STIL will require a real time simulation test set (RTSTS).

16 - The RTSTS and standard minicomputer is required by the PI at least 8 months before his experiment is launched and 1 month after the experiment is returned when used at the PI facility.

17 - The standard or non-standard DEP I/O is assumed to be equivalent to an RAU.

18 - On all options, travel by the PI to coordinate software requirements is not included.

19 - Preflight software will require no software integration testing since it will execute stand-alone.

20 - The location for STIL has a 360-65 computer equivalent to the MSFC 360-65 that requires equivalent mods to establish the required configuration. Spacelab pays for the 1st shift operation and the User pays for any STIL time required on 2nd and 3rd shift.

21 - No distinction between mini and micro computers was made.

22 - Simulation Development:

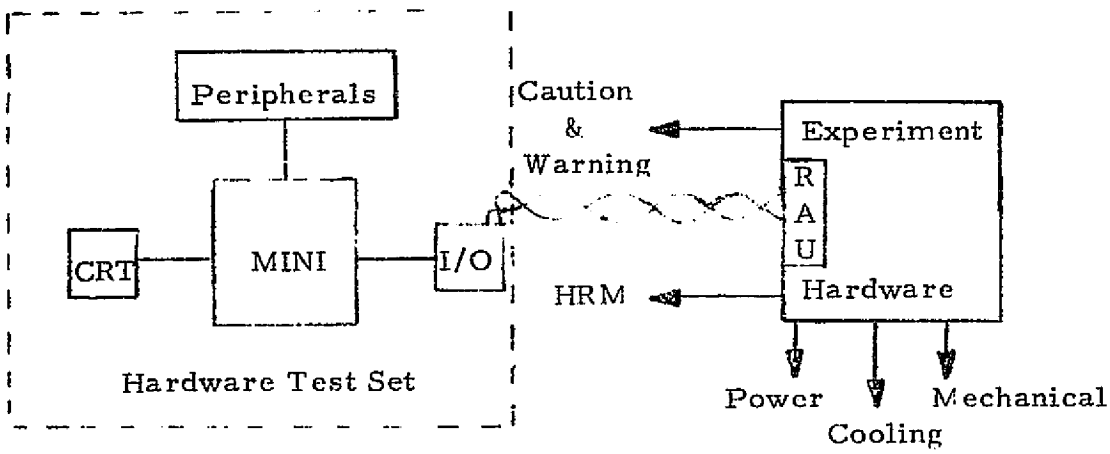

- Preflight software execution against the experiment hardware and against the software simulator will provide assurance that the software development facility and flight hardware provide the same interface to the flight software.

- Execution of the flight software in the flight computer against the flight hardware with appropriate simulators driving the flight hardware would provide validation of the flight software.

23 - Conclusions: When EAS is developed for the central CDMS computer, it is programmatically acceptable to wait until the flight hardware is at Level 3 integration to acquire confidence that the experiment simulator performs like the flight hardware through execution of the preflight test programs.

When EAS is implemented in the distributed minicomputer, confidence of simulator accuracy will be obtained at Level 4 integration since the minicomputer will be at Level 4.

24 - The instructions/year developed for the mission model are developed in the same year that the experiment flies insofar as costing is concerned.

25 - For costing purposes, the common library utilization by a PI will occur only on initial software development.

EXPERIMENT INTEGRATION

1 - Instruments will be integrated at Level 4 for Experiment Application Software (EAS) validation to the degree validation is required.

2 - a) A CDMS hardware simulator is not required at Level 4 integration. b) An experiment software simulator is required at STIL if EAS software is to reside in the CDMS Experiment Computer, to allow integrated verification prior to delivery to Level 3.***

3 - Level 3 integration software checkout will verify only the compatibility of software interfaces between the Spacelab Experiment System and Ground Facilities/Experiment System.

4 - EGSE computer software maintenance will be performed at the Level 3 site.

*** In the Central Computer Options the general verification that the software simulator used for EAS development is compatible with the experiment hardware is not accomplished until the preflight software that was developed on the simulator is run against the hardware at the Level 3 integration.

In the Distributed Options, the preflight software is executed against the hardware at Level 4, thereby providing early identification of experiment software/experiment hardware compatibility. If possible, the EAS in these options may be validated thereby providing the greatest confidence possible of good EAS.

EXPERIMENT APPLICATION SOFTWARE (EAS)

1 - EAS modification percentages for reflight of a payload are 40% for first reflight, decreasing 10% for each subsequent reflight to minimum of 10% modification.

2 - For central EAS development, standard software will be identified and baselined where feasible.

3 - Experiment applications software will be written in a high order language.

4 - Experiment application software requirements for Missions 8, 14, and 21 are representative and can be projected across the mission model.

5 - Common library evolutions will occur primarily in the early years of Spacelab EAS development. The accumulation will occur as follows:

YEAR	% OF NEWLY DEVELOPED EAS
81	10
82	8
83	6
84	4
85	2
86	0 for subsequent years

GDC APPLICATION SOFTWARE REQUIREMENTS

- GDMS SYSTEM ASSUMPTIONS

1 - The CRT has refresh capability.

2 - The system software accepts and accumulates control data via keyboard entry. This includes CRT display of keyboard data for editing. The payload application software provides for the experiment peculiar processing of input control data.

3 - The system software will provide the capability to initiate and schedule payload application software at discrete mission elapsed times.

4 - The system software will provide the transfer of time and state vectors from the Orbiter to the Spacelab experiment computer. These will be stored in fixed locations and be available to any application module through assigned variable names.

5 - No payload application software is required to schedule and control the Spacelab magnetic recorders.

- APPLICATION SOFTWARE ASSUMPTIONS

1 - Payload software requirements shall reflect, as accurately as possible, the experiment operations required or desired by the principal investigator. (As documented in SPDA Level B data). Where this leads to "tall-poles" or unreasonable software requirements, further evaluation shall be made to validate, modify, or otherwise resolve any problems, based on MSFC/GDC engineering judgement.

2 - Functions that cannot be efficiently handled by the crew manually shall be strongly considered for automation.

3 - The crew shall be provided with means for payload control and monitoring at a level that yields high confidence that the experiment is functioning properly and that the acquired data quality is adequate.

4 - Through modest increases in on-board processing, real time transmission requirements shall be minimized wherever possible (i.e., within the capabilities of the CDMS).

5 - Consistent with items 1 thru 4 above, a basic philosophy of minimizing on-board processing shall be applied.

6 - Relative to Mission 8, the Level 1 Constraints for First Spacelab Flight and Spacelab First Flight Guidelines - Level II (both dated November 1975) shall apply.

- Crew Size
- Non-Interference with VFT
- Up to 100 Man-Hours Available for Payload Operations
- Minimize Duplication of Equipment Through Utilization of Spacelab Provided Equipment
- IPS Will Not be Available

o GROUNDRULES FOR ANALYSIS OF MISSION MODEL PAYLOAD COMPUTER PROCESSING REQUIREMENTS

1 - Use as a baseline data source, the July 1975 SPDA Level A payload data.

2 - Use results of detailed analysis (Missions 8, 14, and 21) to replace Level A data for appropriate payload elements as best estimate of overall payload software and processing requirements.

3 - Replace TBD's in Level A data with MSFC/GDC estimate - coordinate with NASA payload representatives.

4 - For remaining payload elements, identify those with payload-provided computers and make a new gross estimate of computer processing requirements based upon similarity to one or more of the payload elements that were analyzed in detail.

5 - Correct any obvious errors (e. g., 120 comp/sec for EO-06-S) in Level A data for remaining payloads.

6 - Continue to use Level A data for any other payload elements not covered by steps 2 thru 5.

SECTION 3 Options and Cost Elements

This section contains a correlation matrix of software development options and cost elements for both Spacelab and user costs.

OPTION/COST ELEMENT CORRELATION MATRIX

OPTIONS			SPACELAB COST ELEMENTS																			
			1. CDMS										2. EGSE							3. STIL		
			1.1 HARDWARE MODIFICATIONS	1.2 SUBSYSTEM COMPONENT SOFTWARE DEVELOPMENT AND ACCEPTANCE	1.3 SUBSYSTEM COMPUTER SOFTWARE MAINTENANCE	1.4 SUBSYSTEM COMPUTER SOFTWARE CONFIGURATION MANAGEMENT, RELEASE, AND DISTRIBUTION	1.5 EXPERIMENT COMPUTER SOFTWARE DEVELOPMENT AND ACCEPTANCE	1.6 EXPERIMENT COMPUTER SOFTWARE MAINTENANCE	1.7 EXPERIMENT COMPUTER SOFTWARE CONFIGURATION MANAGEMENT, RELEASE AND DISTRIBUTION	2.1 HARDWARE MODIFICATIONS AND ACCEPTANCE	2.2 GROUND CHECKOUT SOFTWARE DEVELOPMENT	2.3 GROUND CHECKOUT SOFTWARE MAINTENANCE	2.4 GROUND CHECKOUT SOFTWARE CONFIGURATION MANAGEMENT, RELEASE AND DISTRIBUTION	2.5 EGSE COMPUTER SOFTWARE DEVELOPMENT AND ACCEPTANCE	2.6 EGSE COMPUTER SOFTWARE CONFIGURATION MAINTENANCE	2.7 EGSE COMPUTER SOFTWARE PRODUCTION SET UPDATE MANAGEMENT, RELEASE, AND DISTRIBUTION	3.1 FACILITY ACQUISITION	3.2 FACILITY OPERATION AND MAINTENANCE	3.3 HOST AND SUPPORTING COMPUTER SOFTWARE DEVELOPMENT AND ACCEPTANCE	3.4 HOST AND SIMULATION COMPUTER SOFTWARE MAINTENANCE
0. CENTRALIZED ONBOARD COMPUTING CONFIGURATION	A. NO MINICOMPUTER	1. CENTRAL GROUP DEVELOPS EAS AT CENTRAL FACILITY (STIL)																				
		2. PI DEVELOPS EAS AT CENTRAL FACILITY: a. LOCAL b. REMOTE																				
		3. PI DEVELOPS EAS AT HIS FACILITY WHICH IS COMPATIBLE WITH STIL: a. REALTIME SIMULATION AT STIL b. PI USES AN RTSTS																				
		4. PI DEVELOPS EAS AT HIS FACILITY WHICH IS NOT COMPATIBLE WITH STIL																				
I. CENTRALIZED ONBOARD COMPUTING CONFIGURATION	A. NON-STANDARD MINICOMPUTER	1. CENTRAL GROUP DEVELOPS EAS AT CENTRAL FACILITY (STIL)																				
		2. PI DEVELOPS EAS AT CENTRAL FACILITY: a. LOCAL b. REMOTE																				
		3. PI DEVELOPS EAS AT HIS FACILITY WHICH IS COMPATIBLE WITH STIL: a. REALTIME SIMULATION @ STIL b. PI USES AN RTSTS																				
		4. PI DEVELOPS EAS AT HIS FACILITY WHICH IS NOT COMPATIBLE WITH STIL																				
	B. STANDARD MINICOMPUTER	1. CENTRAL GROUP DEVELOPS EAS AT CENTRAL FACILITY (STIL)																				
		2. PI DEVELOPS EAS AT CENTRAL FACILITY: a. LOCAL b. REMOTE																				
		3. PI DEVELOPS EAS AT HIS FACILITY WHICH IS COMPATIBLE WITH STIL: a. REALTIME SIMULATION @ STIL b. PI USES AN RTSTS																				
		4. PI DEVELOPS EAS AT HIS FACILITY WHICH IS NOT COMPATIBLE WITH STIL																				
II. DISTRIBUTED ONBOARD COMPUTING CONFIGURATION	A. NON-STANDARD MINICOMPUTER	1. CENTRAL GROUP DEVELOPS EAS AT CENTRAL FACILITY (STIL)																				
		2. PI DEVELOPS EAS AT CENTRAL FACILITY: a. LOCAL b. REMOTE																				
		3. PI DEVELOPS EAS AT HIS FACILITY WHICH IS COMPATIBLE WITH STIL: a. REALTIME SIMULATION @ STIL b. PI USES AN RTSTS																				
		4. PI DEVELOPS EAS AT HIS FACILITY WHICH IS NOT COMPATIBLE WITH STIL																				
	B. STANDARD MINICOMPUTER	1. CENTRAL GROUP DEVELOPS EAS AT CENTRAL FACILITY (STIL)																				
		2. PI DEVELOPS EAS AT CENTRAL FACILITY: a. LOCAL b. REMOTE																				
		3. PI DEVELOPS EAS AT HIS FACILITY WHICH IS COMPATIBLE WITH STIL: a. REALTIME SIMULATION @ STIL b. PI USES AN RTSTS																				
		4. PI DEVELOPS EAS AT HIS FACILITY WHICH IS NOT COMPATIBLE WITH STIL																				

ORIGINAL PAGE IS
OF POOR QUALITY

OPTION/COST ELEMENT CORRELATION MATRIX

OPTIONS			SPACELAB USER COST ELEMENTS																		
			4. EXPERIMENT										5. DEP			6. RTSTS					7.
			4.1 EXPERIMENT APPLICATION SOFTWARE DEVELOPMENT	4.2 EXPERIMENT APPLICATION SOFTWARE MAINTENANCE	4.3 EXPERIMENT APPLICATION SOFTWARE INTEGRATED VERIFICATION	4.4 EXPERIMENT PREFLIGHT CHECKOUT SOFTWARE DEVELOPMENT	4.5 EXPERIMENT PREFLIGHT CHECKOUT SOFTWARE MAINTENANCE	4.6 EAS DEPENDENT STIL HARDWARE SUPPLEMENT	4.7 EAS DEPENDENT STIL SOFTWARE SUPPLEMENT	4.8 EXPERIMENT REALTIME SIMULATION SOFTWARE DEVELOPMENT	4.9 EXPERIMENT REALTIME SIMULATION SOFTWARE MAINTENANCE	5.1 EXPERIMENT PROCESSOR ACQUISITION	5.2 EXPERIMENT PROCESSOR MAINTENANCE & DISTRIBUTION	5.3 DEP SOFTWARE DEVELOPMENT & PROCUREMENT	5.4 DEP SOFTWARE MAINTENANCE & DISTRIBUTION	6.1 RTSTS ACQUISITION	6.2 RTSTS MAINTENANCE, OPERATION & DISTRIBUTION	6.3 RTSTS SUPPORT SOFTWARE DEVELOPMENT & PROCUREMENT	6.4 RTSTS SUPPORT SOFTWARE MAINTENANCE & DISTRIBUTION	PI HOST COMPUTER SOFTWARE	
C CENTRALIZED ONBOARD COMPUTING CONFIGURATION	A. NO MINICOMPUTER	1. CENTRAL GROUP DEVELOPS EAS AT CENTRAL FACILITY (STIL) 2. PI DEVELOPS EAS AT CENTRAL FACILITY: a. LOCAL b. REMOTE 3. PI DEVELOPS EAS AT HIS FACILITY WHICH IS COMPATIBLE WITH STIL: a. REALTIME SIMULATION AT STIL b. PI USES AN RTSTS 4. PI DEVELOPS EAS AT HIS FACILITY WHICH IS NOT COMPATIBLE WITH STIL.																			
I CENTRALIZED ONBOARD COMPUTING CONFIGURATION	A. NON-STANDARD MINICOMPUTER	1. CENTRAL GROUP DEVELOPS EAS AT CENTRAL FACILITY (STIL). 2. PI DEVELOPS EAS AT CENTRAL FACILITY: a. LOCAL. b. REMOTE. 3. PI DEVELOPS EAS AT HIS FACILITY WHICH IS COMPATIBLE WITH STIL: a. REALTIME SIMULATION @ STIL. b. PI USES AN RTSTS. 4. PI DEVELOPS EAS AT HIS FACILITY WHICH IS NOT COMPATIBLE WITH STIL.																			
	B. STANDARD MINICOMPUTER	1. CENTRAL GROUP DEVELOPS EAS AT CENTRAL FACILITY (STIL). 2. PI DEVELOPS EAS AT CENTRAL FACILITY: a. LOCAL. b. REMOTE. 3. PI DEVELOPS EAS AT HIS FACILITY WHICH IS COMPATIBLE WITH STIL: a. REALTIME SIMULATION @ STIL. b. PI USES AN RTSTS. 4. PI DEVELOPS EAS AT HIS FACILITY WHICH IS NOT COMPATIBLE WITH STIL.																			
D DISTRIBUTED ONBOARD COMPUTING CONFIGURATION	A. NON-STANDARD MINICOMPUTER	1. CENTRAL GROUP DEVELOPS EAS AT CENTRAL FACILITY (STIL). 2. PI DEVELOPS EAS AT CENTRAL FACILITY: a. LOCAL. b. REMOTE. 3. PI DEVELOPS EAS AT HIS FACILITY WHICH IS COMPATIBLE WITH STIL: a. REALTIME SIMULATION @ STIL. b. PI USES AN RTSTS. 4. PI DEVELOPS EAS AT HIS FACILITY WHICH IS NOT COMPATIBLE WITH STIL.																			
	B. STANDARD MINICOMPUTER	1. CENTRAL GROUP DEVELOPS EAS AT CENTRAL FACILITY (STIL). 2. PI DEVELOPS EAS AT CENTRAL FACILITY: a. LOCAL. b. REMOTE. 3. PI DEVELOPS EAS AT HIS FACILITY WHICH IS COMPATIBLE WITH STIL: a. REALTIME SIMULATION @ STIL. b. PI USES AN RTSTS. 4. PI DEVELOPS EAS AT HIS FACILITY WHICH IS NOT COMPATIBLE WITH STIL.																			

ORIGINAL PAGE IS
OF POOR QUALITY

OPTION COST SUMMARIES (K$)

COST ELEMENT	OPTION IA1	OPTION IA2A	OPTION IA2B	OPTION IA3A	OPTION IA3B
4.1	1,956.51	2,783.51	2,476.67	2,803.27	2,623.06
4.2	3,369.73	4,120.28	3,587.25	4,051.71	3,792.03
4.3	3,322.73	3,554.76	3,554.76	3,554.76	3,504.71
4.4	1,635.00	2,156.15	1.791.35	2,136.53	1,980.18
4.5	1,379.53	1,769.28	1,511.46	1,794.71	1,662.78
4.6	406.74	406.74	7,834.02	13.74	--------
4.7	--------	--------	--------	--------	--------
4.8	3,357.50	4,143.02	3,593.86	3,781.77	3,546.85
4.9	2,832.09	3,495.70	3,032.33	3,182.64	2,984.05
SUBTOTAL	18,259.83	22,429.44	27,381.70	21,319.13	20,093.66
5.1	2,881.50	2,881.50	2,881.50	2,881.50	2,881.50
5.2	126.48	126,48	126.48	126.48	126.48
5.3	2,250.00	2,250.00	2,250.00	2,250.00	2,250.00
5.4	796.70	796.70	796.70	796.70	796.70
SUBTOTAL	6,054.68	6,054.68	6,054.68	6,054.68	6,054.68
6.1	--------	--------	--------	--------	1,650.00
6.2	--------	--------	--------	--------	844.75
6.3	--------	--------	--------	--------	1,760.00
6.4	--------	--------	--------	--------	1,700.00
SUBTOTAL	--------	--------	--------	--------	5,954.75
7.1	--------	--------	--------	1,667.50	1,553.18
TOTAL	24,314.51	28,484.12	33,436.38	29,041.31	33,656.27

OPTION COST SUMMARIES (K$)

COST ELEMENT	OPTION IB1	OPTION IB2A	OPTION IB2B	OPTION IB3A	OPTION IB3B
4.1	1,956.51	2,783.51	2,476.67	2,803.27	2,633.95
4.2	3,369.73	4,120.28	3,587.25	4,051.71	3,923.48
4.3	3,322.73	3,554.76	3,554.76	3,554.76	3,504.96
4.4	1,635.00	2,156.15	1,791.35	2,136.53	1,979.02
4.5	1,379.53	1,769.28	1,511.46	1,794.71	1,670.78
4.6	406.74	406.74	7,834.02	13.74	0.00
4.7	--------	--------	--------	--------	--------
4.8	3,357.50	4,143.02	3,593.86	3,781.77	3,546.85
4.9	2,832.09	3,495.70	3,032.33	3,182.64	2,989.05
SUBTOTAL	18,259.83	22,429.44	27,381.70	21,319.13	20,248.09
5.1	800.30	800.30	800.30	800.30	800.30
5.2	128.98	128.98	128.98	128.98	128.98
5.3	450.00	450.00	450.00	450.00	450.00
5.4	382.70	382.70	382.70	382.70	382.70
SUBTOTAL	1,761.98	1,761.98	1.761.98	1.761.98	1.761.98
6.1	--------	--------	--------	--------	1,560.00
6.2	--------	--------	--------	--------	848.25
6.3	--------	--------	--------	--------	352.00
6.4	--------	--------	--------	--------	632.75
SUBTOTAL	--------	--------	--------	--------	3,393.00
7.1	--------	--------	--------	1,667.50	1,553.18
TOTAL	20,021.81	24,191.42	29,143.68	24,748.61	26,956.25

OPTION COST SUMMARIES (K$)

COST ELEMENT	OPTION IC1	OPTION IC2A	OPTION IC2B	OPTION IC3A		
4.1	1,955.04	2,790.46	2,483.62	2,832.51		
4.2	3,382.22	4,132.77	3,599.74	4,107.70		
4.3	3,322.73	3,554.76	3,554.76	3,554.76		
4.4	1,635.00	2,156.15	1,791.35	2,136.53		
4.5	1,379.53	1,769.28	1,511.46	1,794.71		
4.6	406.74	406.74	7,834.02	13.74		
4.7	--------	--------	--------	--------		
4.8	3,357.50	4,143.02	3,593.86	3,781.77		
4.9	2,852.09	3,495.70	3,032.33	3,182.64		
SUBTOTAL	18,270.85	22,448.88	27,401.14	21,404.36		
5.1	--------	--------	--------	--------		
5.2	--------	--------	--------	--------		
5.3	--------	--------	--------	--------		
5.4	--------	--------	--------	--------		
SUBTOTAL	--------	--------	--------	--------		
6.1	--------	--------	--------	--------		
6.2	--------	--------	--------	--------		
6.3	--------	--------	--------	--------		
6.4	--------	--------	--------	--------		
SUBTOTAL	--------	--------	--------	--------		
7.1	--------	--------	--------	1,667.50		
TOTAL	18,270.85	22,448.88	27,401.14	23,071.86		

OPTION COST SUMMARIES (K$)

COST ELEMENT	OPTION IIB1	OPTION IIB2A	OPTION IIB2B	OPTION IIB3A	OPTION IIB3B
4.1	1,963.76	2,790.36	2,477.22	2,832.52	2,681.42
4.2	3,381.59	4,132.82	3,579.35	4,084.09	3,852.95
4.3	0.00	0.00	0.00	0.00	0.00
4.4	1,635.00	2,156.15	1,791.35	2,136.53	1,980.02
4.5	1,379.53	1,819.22	1,511.48	1,794.72	1,670.17
4.6	406.74	406.74	7,834.02	13.74	0.00
4.7	--------	--------	--------	--------	--------
4.8	3,357.50	4,143.02	3,593.86	3,781.77	3,346.41
4.9	2,862.09	3,495.70	3,032.33	3,182.64	2,963.40
SUBTOTAL	14,986.21	18,944.01	23,819.61	17,826.01	16,494.37
5.1	2,101.30	2,101.30	2,101.30	2,101.30	2,101.30
5.2	1,169.92	1,169.92	1,169.92	1,169.92	1,169.92
5.3	450.00	450.00	450.00	450.00	450.00
5.4	424.60	424.60	424.60	424.60	424.60
SUBTOTAL	4,145.82	4,145.82	4,145.82	4,145.82	4,145.82
6.1	--------	--------	--------	--------	9,672.00
6.2	--------	--------	--------	--------	7,148.51
6.3	--------	--------	--------	--------	352.00
6.4	--------	--------	--------	--------	819.30
SUBTOTAL	--------	--------	--------	--------	17,991.81
7.1	--------	--------	--------	1,589.30	1,589.30
TOTAL	19,132.03	23,089.83	27,965.43	23,561.13	40,221.30

OPTION IIB3B (VARIATIONS) (K$)

COST ELEMENT	Variation I	Variation II	Variation III			
4.1	2,029.61	2,603.65	3,177.56			
4.2	3,435.94	3,751.47	4,594.46			
4.3	--------	--------	--------			
4.4	1,338.40	1,897.23	2,473.99			
4.5	1,129.45	1,600.29	2,086.92			
4.6	--------	--------	--------			
4.7	--------	--------	--------			
4.8	2,824.00	--------	--------			
4.9	2,551.50	--------	--------			
SUBTOTAL	13,308.90	9,852.64	12,332.93			
5.1	2,101.30	2,101.30	2,101.30			
5.2	1,169.92	1,169.92	1,169.92			
5.3	450.00	450.00	450.00			
5.4	424.60	424.60	424.60			
SUBTOTAL	4,145.82	4,145.82	4,145.82			
6.1	9,672.00	3,937.00	3,239.50			
6.2	7,148.51	7,362.60	6,098.07			
6.3	352.00	244.00	37.50			
6.4	819.30	494.30	169.32			
SUBTOTAL	17,991.81	12,037.90	9,544.39			
7.1	--------	1,628.12	1,628.08			
TOTAL	35,446.53	27,664.48	27,651.22			

SECTION 4 Summary of Software Requirements Analysis Study

This section contains a summary of the Spacelab software requirements analysis performed by General Dynamics, Convair Division under contract NAS8-29462. The details of this study are documented in the contract report entitled, "Spacelab Payloads Accommodation Study, Special Emphasis Task, Spacelab Payload Computer Processing Requirements," March 5, 1976, General Dynamics.

OVERALL APPROACH

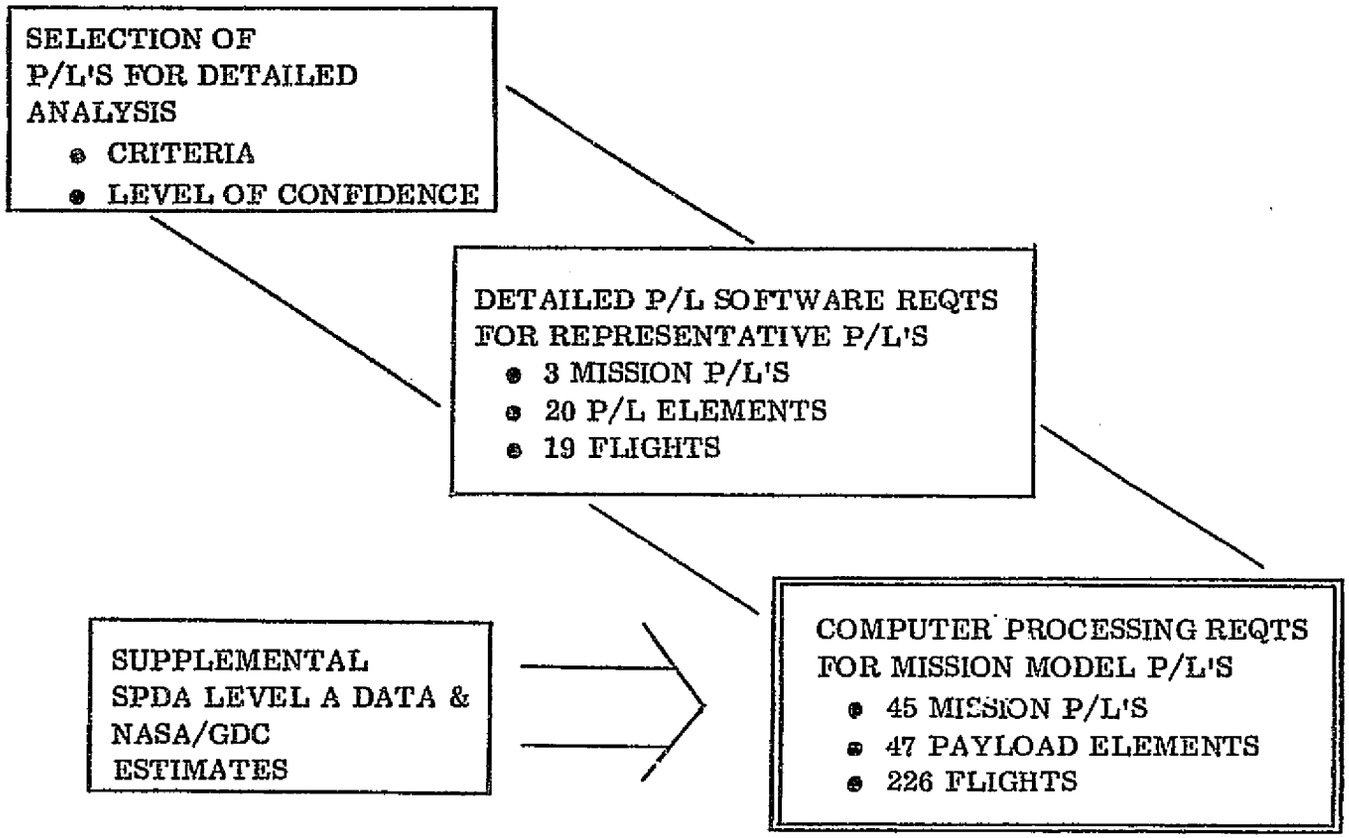

SPACELAB PAYLOAD COMPUTER PROCESSING REQUIREMENTS

OBJECTIVE
- SUPPORT MSFC COST ANALYSIS OF SPACELAB COMPUTER PROCESSING OPTIONS (E.G., CENTRALIZED VS DISTRIBUTED)

SCOPE
- DEFINE IN DETAIL P/L SOFTWARE REQUIREMENTS FOR MISSIONS 8, 14, 21
- ASSESS PROCESSING REQUIREMENTS OF ALL SPACELAB MISSIONS ON CURRENT MISSION MODEL BY CORRELATING WITH EXISTING LEVEL A P/L ELEMENT DATA PLUS RESULTS FROM DETAILED ANALYSIS

SCHEDULE
- STUDY START - KICK-OFF MEETING AT MSFC 13 JANUARY
- INITIAL RESULTS TRANSMITTED 23 JANUARY (MISSION MODEL AND MISSION 8)
- PRELIMINARY MISSION 14 RESULTS - 6 FEBRUARY
- PRELIMINARY MISSION 21 RESULTS AND MISSION MODEL UPDATE - 20 FEBRUARY
- FINAL REPORT - 5 MARCH

DEFINITIONS

• APPLICATIONS SOFTWARE	- COLLECTION OF COMPUTER PGMS TO IMPLEMENT REQUIREMENTS OF PAYLOAD OPERATION
• SOFTWARE MODULE	- SINGLE COMPUTER PGM SATISFYING INDEPENDENT PAYLOAD FUNCTION (E.G., CHECKOUT)
• RAPID ACCESS MEMORY*	- GENERALLY SAME AS COMPUTER MAIN MEMORY. NORMALLY INCLUDES ALL ACTIVE APPLICATIONS PGMS & ASSOCIATED DATA CONSTANTS, DISPLAY FORMATS, BUFFER MEMORY
• BULK MEMORY*	- STORAGE FOR APPLICATIONS PGMS, DATA CONSTANTS, DISPLAY FORMATS, DATA FILES
• NO. COMPUTATIONS/SEC*	- ESTIMATED NO. OF COMPUTER OPNS/SEC. RELATABLE TO FIXED PT. ADDS/SEC (EAPS), EXCEPT COMPS/SEC DOESN'T CONSIDER INSTRUCTION MIX OR RELATIVE COMPUTER SPEED FOR DIFFERENT OPNS
• SPACELAB MISSION MODEL (PM01 75-253)	- FLIGHT PLAN/SCHEDULE FOR SPACELAB PAYLOADS (226 FLIGHTS, 1980-1991)
• SPACELAB MISSION MODEL PAYLOAD	- 1 OF 45 FULL SPACELAB PAYLOADS SCHEDULED FOR FLIGHT ON SPACELAB MISSION MODEL
• PAYLOAD ELEMENT (REF - 7/75 SPDA)	- 1 OF 47 PARTIAL SPACELAB PAYLOADS SCHEDULED FOR FLIGHT ON SPACELAB MISSION MODEL
	- SPACELAB MISSION MODEL PAYLOAD COMPRISED OF ONE OR MORE PAYLOAD ELEMENTS

*SPDA LEVEL A DESCRIPTOR

SPACELAB MISSION PAYLOADS 1980-1991

Item	Spacelab Mission Model -Msn. P/L Code	SPDA Payload Elements	
		SPDA Payload Number	SPDA title
1	AST-10A Mission 21	AS-01-S AS-04-S	1 m IR Telescope 1 m UV Telescope
2	AST-10B	AS-03-S AS-04-S AS-05-S AS-19-S	Deep Sky UV Survey Telescope 1 m UV Telescope Very Wide Field Galactic Camera Selected Area Deep Sky Survey Telescope
3	AST-10C	AS-01-S AS-03-S	1 m IR Telescope Deep Sky UV Survey Telescope
4	AST-10D	AS-04-S AS-15-S	1 m UV Telescope 3 m Ambient Temp. IR Telescope
5	AST-10F	AS-07-S	Cometary Simulation
6	AST-10I	AS-09-S	30 m IR Interferometer
7	AST-10J	AS-04-S AS-10-S AS-19-S	1 m UV Telescope Advanced XUV Telescope Selected Area Deep Sky Survey Telescope
8	AST-10K	AS-04-S AS-20-S	1 m UV Telescope 2.5 m Cryo. Cooled IR Telescope
9	AST-10L	AS-03-S AS-04-S AS-10-S AS-19-S	Deep Sky UV Survey Telescope 1 m UV Telescope Advanced XUV Telescope Selected Area Deep Sky Survey Telescope
10	AST-10M	AS-04-S AS-18-S	1 m UV Telescope 1.5 km IR Interferometer
11	AST-11B	SO-12-S	ATM Spacelab
12	AST-11C	SO-12-S	ATM Spacelab
13	AST-11D	SO-15-S	Solar Activity Early Payload
14	AST-11E	SO-11-S	Solar Fine Pointing Payload
15	PHY-6A	HE-13-S	X-Ray/Gamma Ray Pallet
16	PHY-6B	HE-12-S	High Inclination Cosmic Ray Survey
17	PHY-6C	HE-11-S	X-Ray Angular Structure
18	PHY-6D	HE-16-S	High Energy Gamma Ray Survey
19	PHY-6E	HE-18-S	Gamma Ray Photometric Studies
20	PHY-7A	AP-06-S	AMPS
21	PHY-7B	AP-06-S	AMPS
22	PHY-7C	AP-06-S	AMPS
23	LS-2A	LS-09-S (Mod I)	Life Sciences Shuttle Laboratory

SPACELAB MISSION PAYLOADS 1980-1991

Item	Spacelab Mission Model -Msn. P/L Code	SPDA Payload Elements	
		SPDA Payload Number	SPDA Title
24	ST-2A	ST-58-S	ATL
25	ST-2B	ST-58-S	ATL
26	ST-2C	ST-58-S	ATL
27	ST-2D	ST-58-S	STL
28	MU-1 Mission 8	APE-01 AP-09-S AP-13-S APE-07 SPE-01 SPE-80/85 EO-01-S ST-31-S LS-13-S ASE-01 EOE-01 EO-19-S CN-08-S STE-10	LIDAR/LASER Sounder Electron Accelerometer Low Light Level T. V. Passive Atmospheric Sounder (IR Radiometer) Electrophoresis Isothermal Multipurpose Facility Zero-G Cloud Physics Laboratory Drop Dynamics Facility Life Sciences First NASA/ESA Spacelab Mission Small Telescope/Camera Metric Camera Mark II Interferometer TWT Open Envelope Experiments Advanced Heat Pipe
29	MU-2	HE-11-S SO-17-S EO-19-S	X-Ray Angular Structure Solar Activity Growth Processes Mark II Interferometer
30	OA-1A Mission 14	CN-04-S CN-08-S OP-03-S SP-31-S EO-20-S	Electromagnetic Environment Experiment TWT Open Envelope Experiments Multifrequency Dual Polarized Microwave Radiometry Biological + Furnace + Core Earth Resources Shuttle Imaging Radar
31	OA-1B	EO-01-S OP-03-S CN-06-S	Zero-G Cloud Physics Laboratory Multifrequency Dual Polarized Microwave Radiometer CO_2 LASER Data Relay Link
32	SP-1A	SP-14-S	Biological + General + Core + Auto. Furn. + Auto. Levit. + APPS.
33	NND-16A	OP-02-S EO-06-S	Multifrequency Radar Land Imagery Scanning Spectroradiometer
34	NND-16B	AS-04-S AS-19-S	1 m UV Telescope Selected Area Deep Sky Survey Telescope
35	SP-1B	SP-15-S	Auto. Furn. + Auto. Levit. + Core + APPS.
36	NND-15	SP-13-S SP-15-S	Auto. Levit. + Core + APPS. Auto. Furn. + Auto. Levit. + Core + APPS.

SELECTION OF MISSIONS FOR DETAILED ANALYSIS

EARLY SHUTTLE MISSION CANDIDATES

MISSION NO. / NAME / CRITERIA FOR SELECTION	8 JOINT NASA/ESA	10 MULTI-DISCIPLINE	12 LIFE SCIENCES	14 MULTI-DISCIPLINE APPLIC.	19 AMPS	21 COMBINED ASTRONOMY	26 LIFE SCIENCES
Preliminary Mission Feasibility Established	MSFC Study	IMAP	IMAP DRM (PH A)	IMAP DRM	IMAP DRM	(DRM) ERNO Accom Analysis	(IMAP) (DRM) (PH A)
Anticipated Level of Computer Processing Requirements	Medium	Medium	Low	Low	High	High	Low
Availability of Existing or Near Term Supporting Data	Available - GDC Data Mgt. Study	Near Term - GDC Data Mgt. Study	Derivable from GDC Ph. A Study	Near Term -GDC Data Mgt. Study	—	Near Term -GDC Data Mgt. Study	Derivable from GDC Ph. A Study
Other Computer Processing Studies	-	CRASS	CRASS	CRASS	CRASS	CRASS	CRASS
Other Considerations	Close MSFC I/F	Payload Complement Expected to Change Soon	—	GDC Wrote DRM, Reviewed IMAP	Extremely Complex, Current Ph. B for Redefinition	Payload Discipline Specialist at GDC	—

Selected for detailed analysis

( ) Study has close relation to mission

LEVEL OF CONFIDENCE - DERIVED PAYLOAD SOFTWARE REQUIREMENTS

MISSIONS 8, 14, 21

- SATISFY SELECTION CRITERIA
  - EARLY MISSIONS, PRELIMINARY FEASIBILITY ESTABLISHED
  - RANGE OF COMPUTER PROCESSING REQUIREMENTS
  - AVAILABLE SUPPORTING DATA
  - OTHER RELATED STUDIES

- PAYLOAD ELEMENT DEVELOPMENT STARTED
  - DETAILED STUDIES
  - DEVELOPMENT OF SOME SENSORS/HARDWARE

WHILE RECOGNIZING PRELIMINARY NATURE OF PAYLOAD DEFINITIONS, IT IS NONETHELESS FELT THAT THIS SET OF MISSIONS WILL PROVIDE:

- A REASONABLE LEVEL OF CONFIDENCE FOR DERIVED PAYLOAD SOFTWARE REQUIREMENTS
- AN ADEQUATE BASIS FOR A COMPUTER PROCESSING TRADE STUDY

EXAMPLE PAYLOAD ELEMENT COMPUTER PROCESSING TIMELINE

GENERAL DYNAMICS
Convair Division

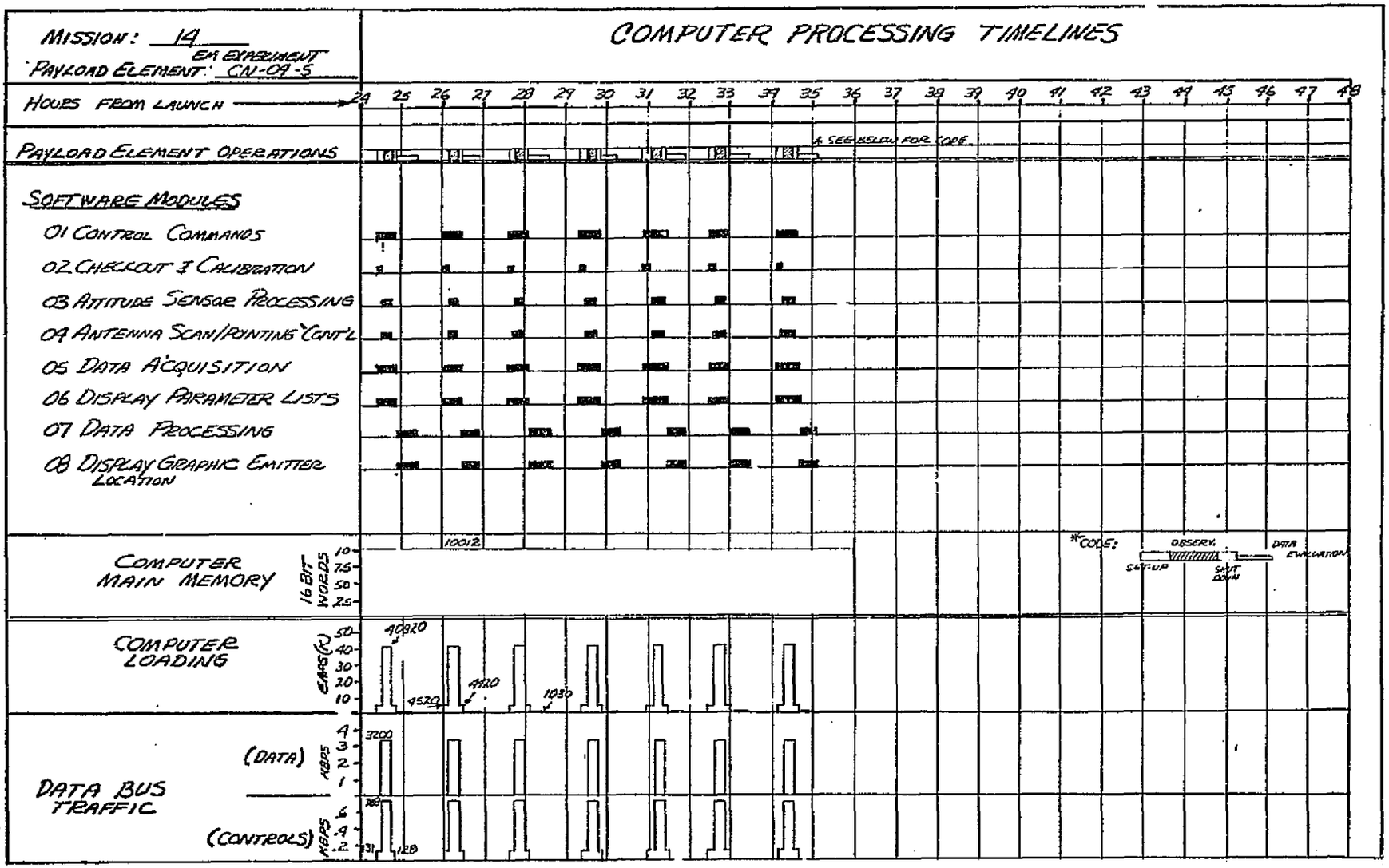

ORIGINAL PAGE IS OF POOR QUALITY

EXAMPLE INTEGRATED PAYLOAD COMPUTER PROCESSING TIMELINE

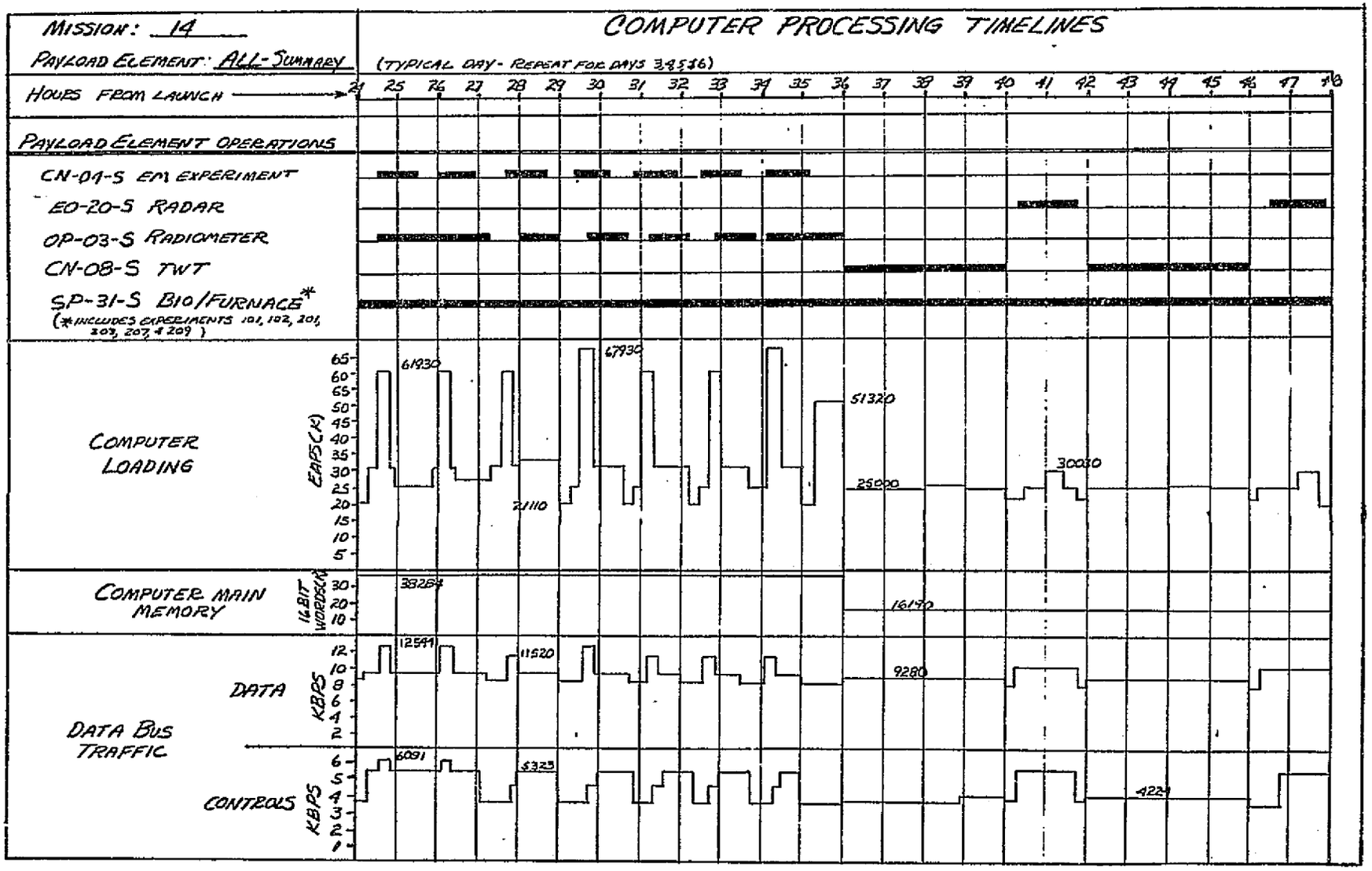

NUMBER OF CODED INSTRUCTIONS

GENERAL DYNAMICS
Convair Division

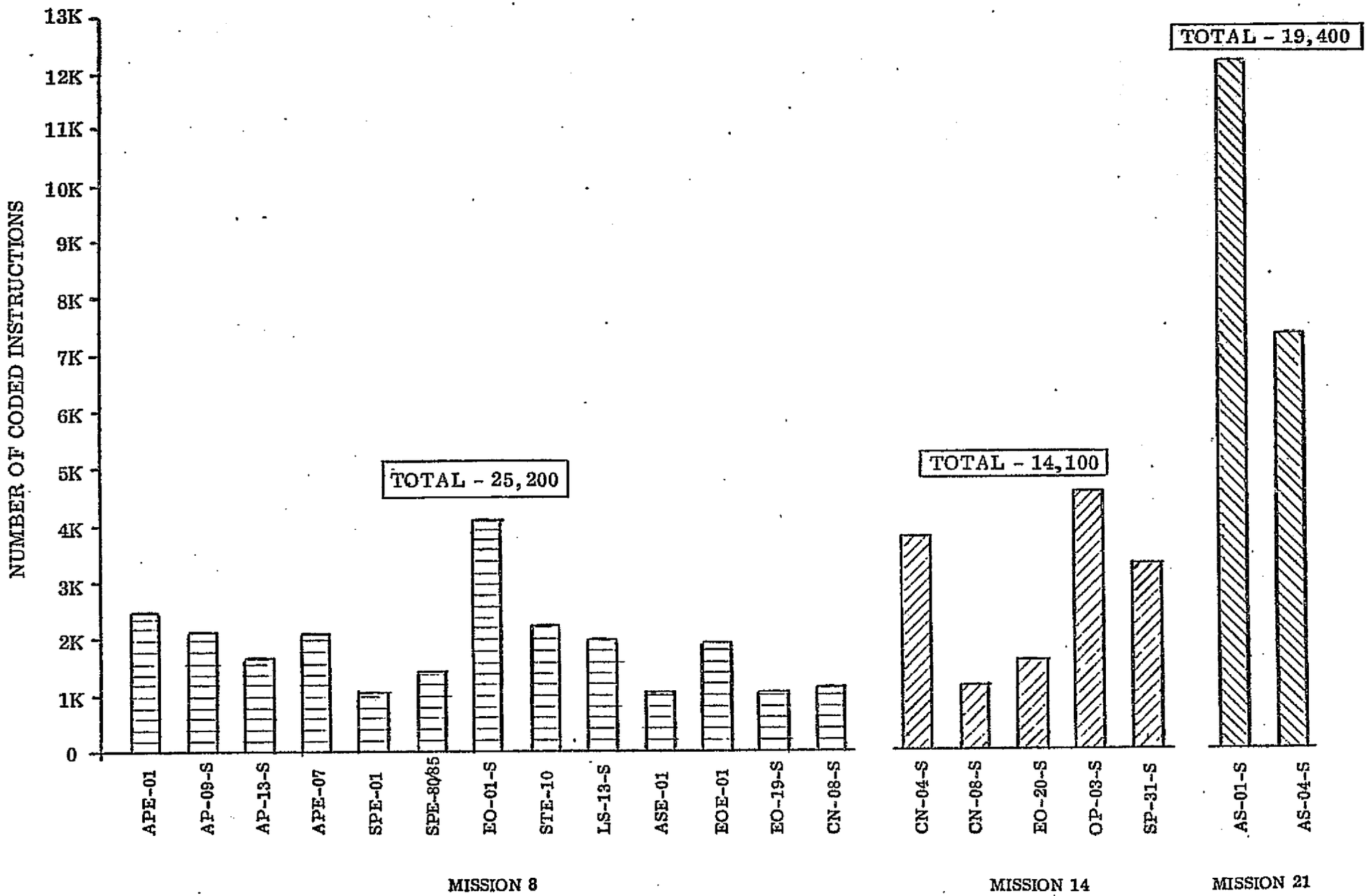

GENERAL DYNAMICS
Convair Division

RAPID ACCESS MEMORY

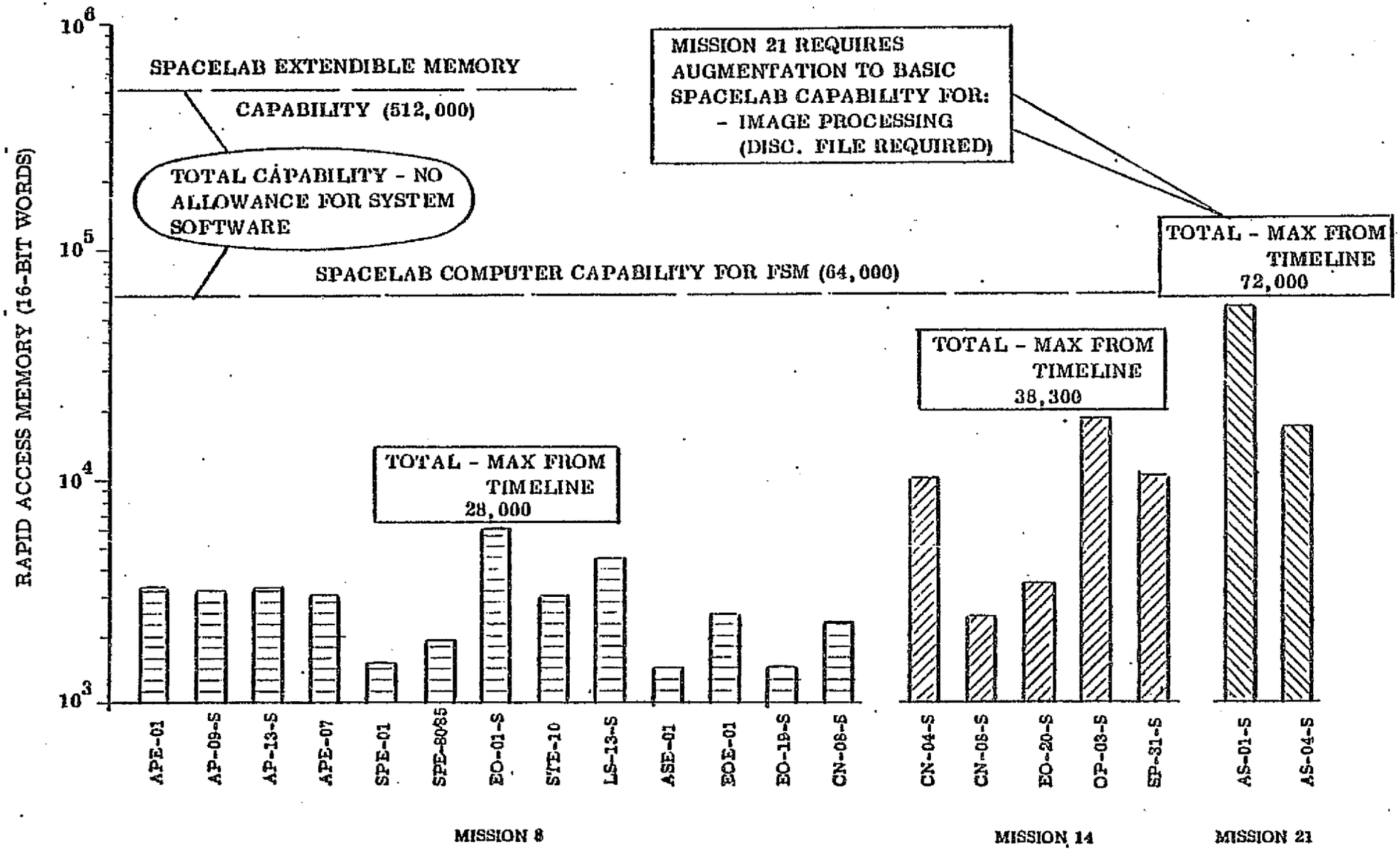

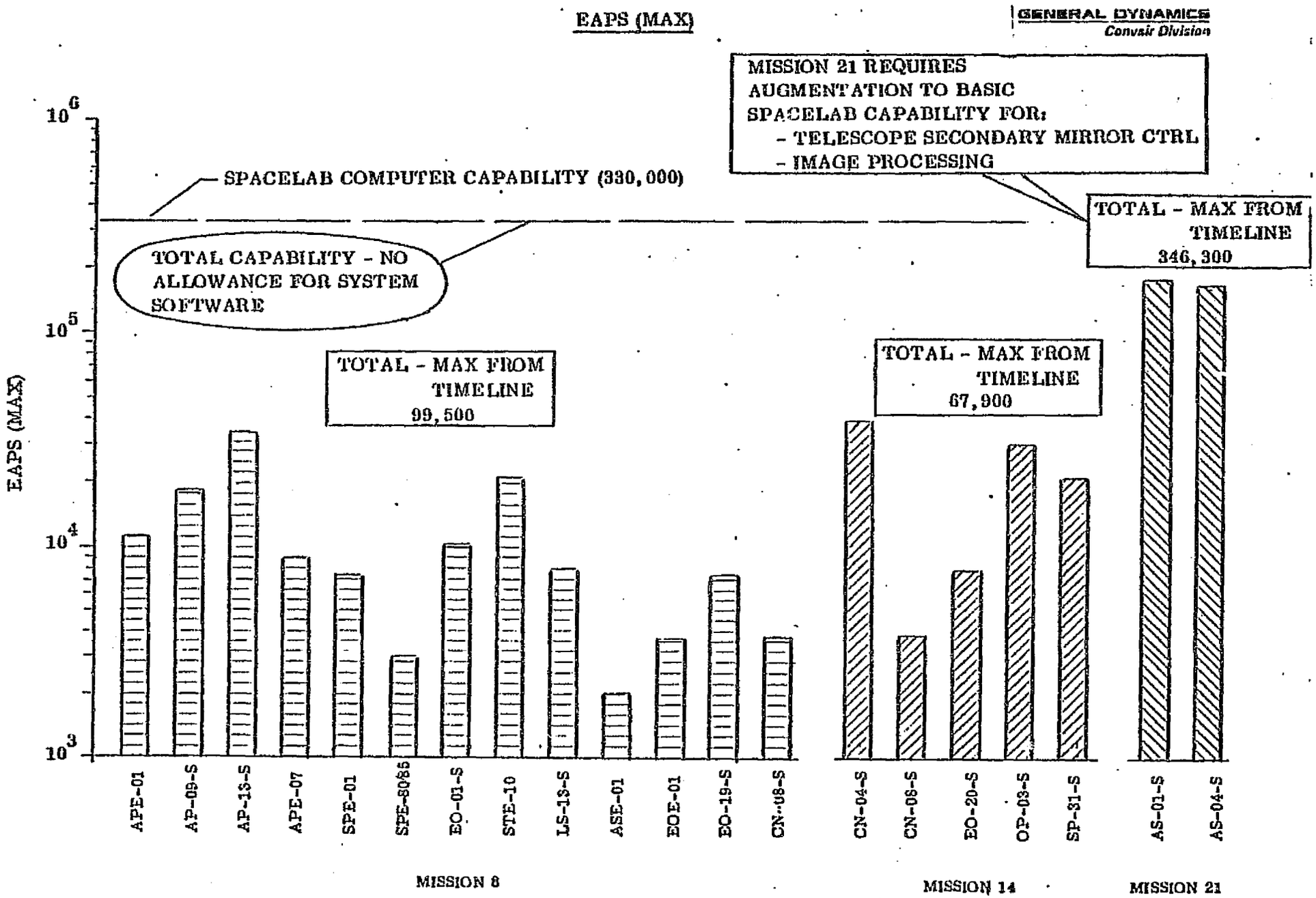
EAPS (MAX)
MISSION 21 REQUIRES AUGMENTATION TO BASIC SPACELAB CAPABILITY FOR:
- TELESCOPE SECONDARY MIRROR CTRL
- IMAGE PROCESSING
SPACELAB COMPUTER CAPABILITY (330,000)
TOTAL CAPABILITY - NO ALLOWANCE FOR SYSTEM SOFTWARE
TOTAL - MAX FROM TIMELINE 99,500
TOTAL - MAX FROM TIMELINE 67,900
TOTAL - MAX FROM TIMELINE 346,300
EAPS (MAX)
10^6
10^5
10^4
10^3
APE-01
AP-09-S
AP-13-S
APE-07
SPE-01
SPE-80/85
EO-01-S
STE-10
LS-13-S
ASE-01
EOE-01
EO-19-S
CN-08-S
CN-04-S
CN-06-S
EO-20-S
OP-03-S
SP-31-S
AS-01-S
AS-04-S
MISSION 8
MISSION 14
MISSION 21

GROUND RULES AND IMPACT ON RESULTS

GROUND RULE	IMPACT ON RESULTS		
	MISSION 8 (15 P/L ELEMENTS)	MISSION 14 (5 P/L ELEMENTS)	MISSION 21 (2 P/L ELEMENTS)
• INCLUDE PI DESIRES - RESOLVE TALL POLES	- P/L REQTS NOT VERIFIED WITH PI'S -		
	• NO TALL POLES IDENTIFIED	• NO TALL POLES IDENTIFIED	• MEMORY & EAPS EXCEED BASIC SPACELAB CAPABILITIES
• CONSIDER AUTOMATION FOR INEFFICIENT MANUAL OPS	• AUTOMATION ADDED FOR 8 P/L ELEMENTS - IMPACT: 15 S/W MODULES	• AUTOMATION ADDED FOR 4 P/L ELEMENTS - IMPACT: 7 S/W MODULES	• AUTOMATION ADDED FOR 2 P/L ELEMENTS - IMPACT: 12 S/W MODULES
• PROVIDE C&D FOR HIGH CONFIDENCE OF ADEQUATE DATA	• QUICK-LOOK PROCESSING & GRAPHIC DISPLAY ADDED FOR 4 P/L ELEMENTS - IMPACT: 6 S/W MODULES	• QUICK-LOOK PROCESSING ADDED FOR 2 P/L ELEMENTS - IMPACT: 6 S/W MODULES	• QUICK-LOOK PROCESSING ADDED FOR BOTH P/L ELEMENTS - IMPACT: 5 S/W MODULES
• MINIMIZE RT XMISSION FOR MODEST PROCESSING PENALTY	• NO REAL OPPORTUNITY - IMPACT: NONE	• 2 P/L ELEMENTS INCLUDE ONBOARD POST OBSERVATION DATA EVALUATION PER PI'S REQUEST - IMPACT: 4 S/W MODULES	• ASTRONOMERS WANT RT. SCHEDULING IMPACT MINIMIZED THROUGH LOCAL CONTROL & MONITORING - IMPACT: 4 S/W MODULES
• CONSISTENT WITH ABOVE, MINIMIZE ON-BOARD PROCESSING	- ASSURES REASONABLE FLIGHT SOFTWARE - INCLUDES ONLY SOFTWARE PROGRAMS REQUIRED FOR MONITORING, CONTROL OR DATA QUALITY ASSESSMENT.		
• INCLUDE REQTS FOR P/L-PROVIDED COMPUTERS	• NO P/L PROVIDED COMPUTERS - IMPACT: NONE	• 2 P/L ELEMENTS * PROVIDED COMPUTERS - IMPACT: SPACELAB CAPABILITY COULD ACCOMMODATE	• 2 P/L ELEMENTS PROVIDED COMPUTERS - IMPACT: MEMORY & EAPS EXCEED SPACELAB CAPABILITY

*SA RADAR PROCESSOR NOT INCLUDED IN REQTS

SOFTWARE DEFINITION ASSUMPTIONS

- CRT HAS REFRESH CAPABILITY
- SYSTEM SOFTWARE ACCEPTS & ACCUMULATES CONTROL DATA VIA KEYBOARD ENTRY
- SPACELAB PROVIDES CAPABILITY TO INITIATE AND SCHEDULE P/L APPLICATION SOFTWARE AT DISCRETE MISSION ELAPSED TIMES
- SPACELAB PROVIDES TRANSFER OF TIME AND STATE VECTORS FROM ORBITER TO EXPERIMENT COMPUTER
- P/L APPLICATION SOFTWARE NOT REQUIRED TO SCHEDULE AND CONTROL SPACELAB MAGNETIC RECORDERS
- SPACELAB PROVIDES TRANSFER OF UPLINK COMMANDS FROM ORBITER TO EXPERIMENT COMPUTER
- SPACELAB PROVIDES FOR INPUT OF HIGH RATE P/L DATA TO EXPERIMENT COMPUTER
- SPACELAB TRANSFERS IPS STATE VECTORS FROM SPACELAB SUBSYSTEM COMPUTER TO EXPERIMENT COMPUTER
- ALL APPLICATION PROGRAMS, DATA CONSTANTS AND DISPLAY FORMATS STORED IN BULK MEMORY
- ALL APPLICATION PROGRAMS, DATA CONSTANTS, DISPLAY FORMATS AND BUFFER DATA MEMORY FOR ACTIVE PROGRAMS ARE INCLUDED IN THE ESTIMATE OF RAPID ACCESS MEMORY

RAPID ACCESS MEMORY REQUIREMENTS

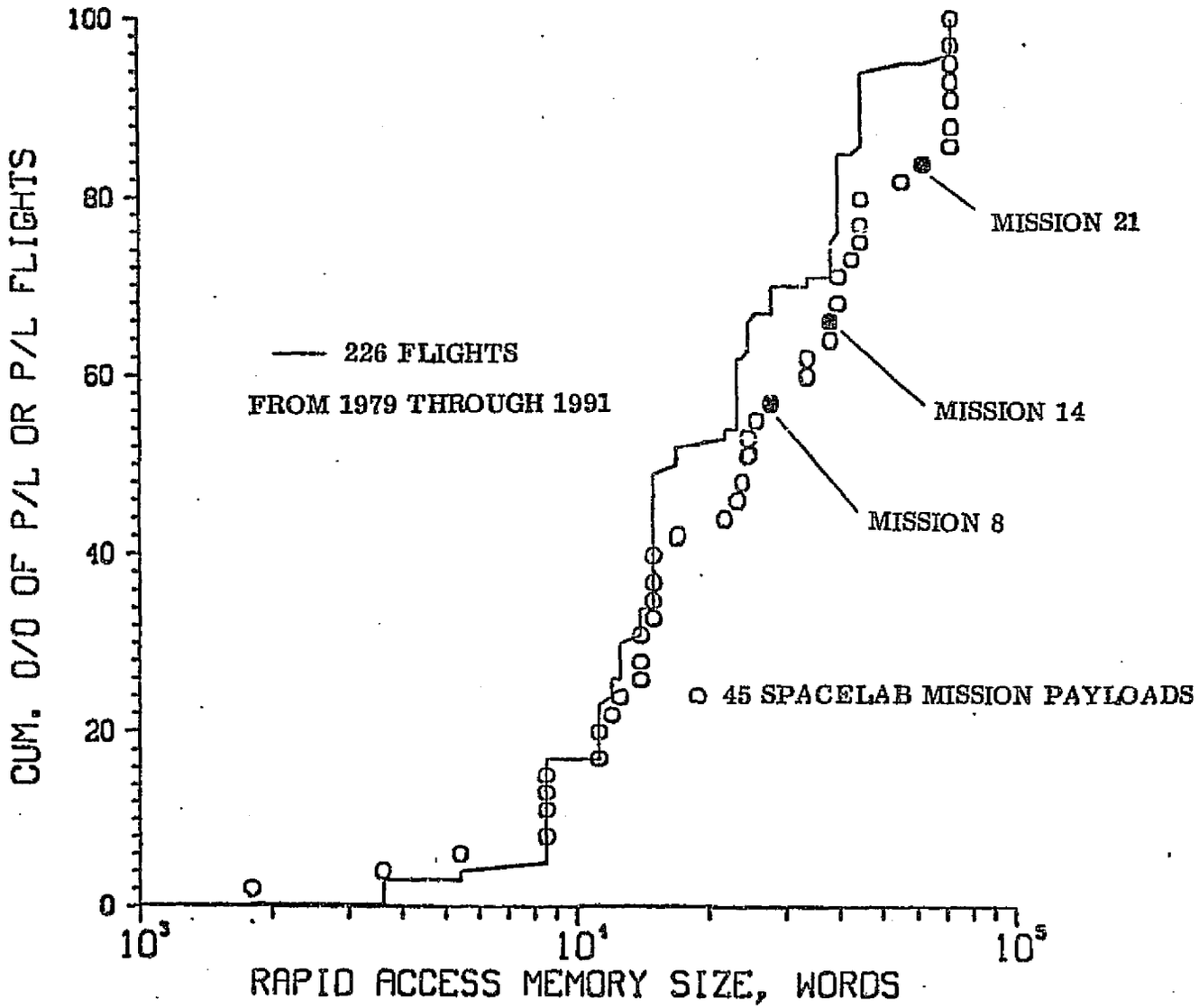

REQUIREMENTS FOR NO. OF COMPUTATIONS PER SEC

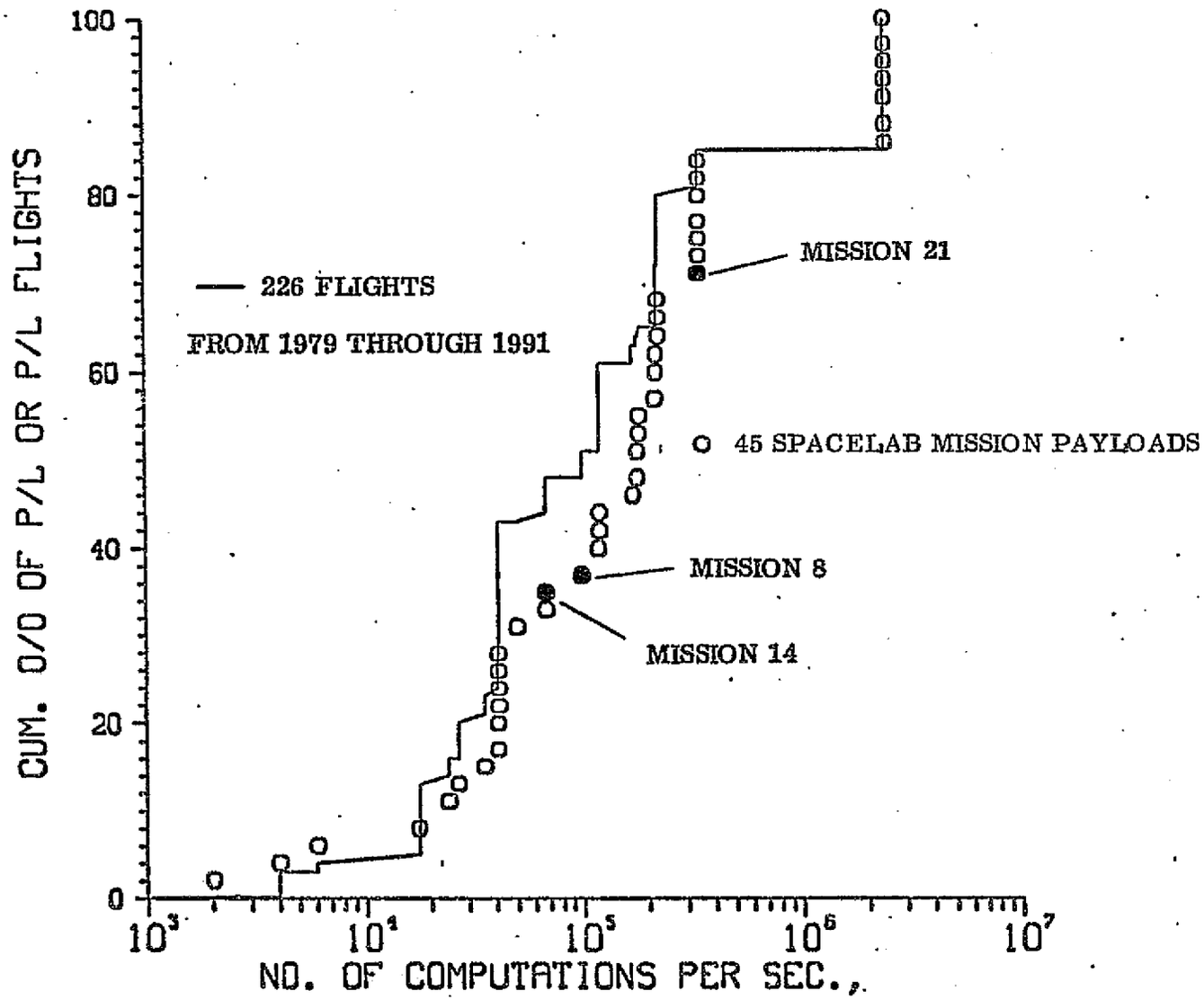

ESTIMATED NUMBER OF MINI COMPUTERS

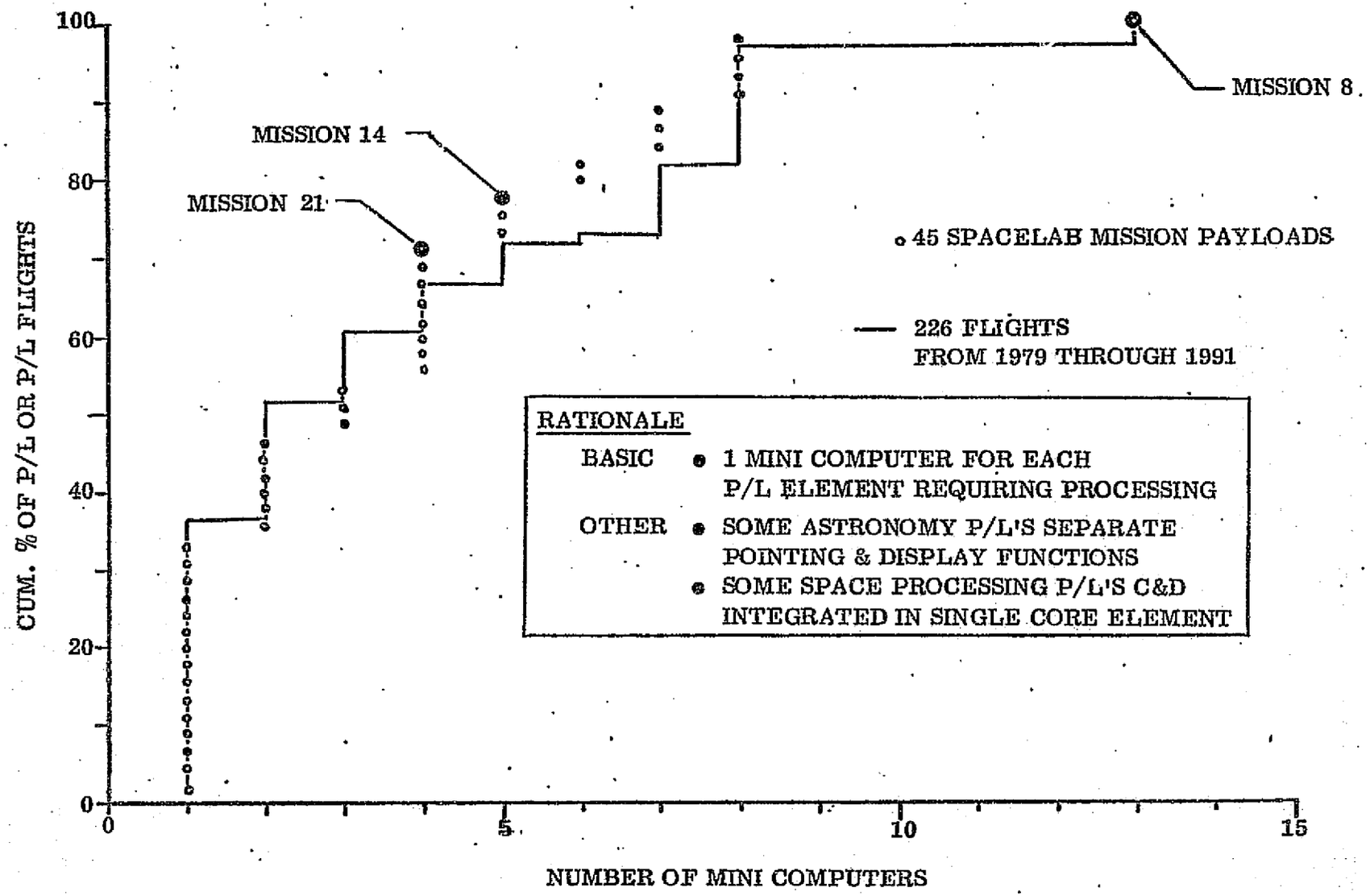

RATIONALE

BASIC
- 1 MINI COMPUTER FOR EACH P/L ELEMENT REQUIRING PROCESSING

OTHER
- SOME ASTRONOMY P/L'S SEPARATE POINTING & DISPLAY FUNCTIONS
- SOME SPACE PROCESSING P/L'S C&D INTEGRATED IN SINGLE CORE ELEMENT

SUMMARY

- OBJECTIVES/SCHEDULE
  - OBJECTIVES MET; ALL DATA DUMPS MADE ON SCHEDULE
- DETAILED ANALYSIS
  - SOFTWARE REQTS DERIVED FOR MISSIONS 8, 14, 21
    - 20 PAYLOAD ELEMENTS
    - 132 SOFTWARE MODULES (~57K CODED INSTRUCTIONS)
    - 36 P/L ELEMENT SOFTWARE TIMELINES
    - 3 INTEGRATED MISSION SOFTWARE TIMELINES
  - MISSION 8 & 14 REQTS EASILY ACCOMMODATED BY SPACELAB COMPUTER
  - MISSION 21 REQUIRES AUGMENTATION TO BASIC SPACELAB COMPUTER SUPPORT
  - LARGE NO. OF MINI COMPUTERS RESULTS FROM ASSUMPTION OF 1 COMPUTER PER P/L ELEMENT REQUIRING PROCESSING
- MISSION MODEL ASSESSMENT
  - SOFTWARE REQTS DERIVED FOR 45 SPACELAB MISSION P/L'S
  - 47 SPDA P/L ELEMENTS CORRELATED WITH 45 SPACELAB MISSIONS REPRESENTING 226 FLIGHTS (1980-1991)
  - DETAILED REQTS SUPPLEMENTED WITH
    - SPDA LEVEL A DATA
    - NASA/GDC EST. FOR TBD'S
    - GDC EST. FOR P/L PROVIDED COMPUTER REQTS
- RECOMMENDED FUTURE ACTIVITY
  - COMPLETE PI REVIEW OF ASSUMPTIONS & DERIVED REQTS
  - VERIFY SYSTEMS SOFTWARE FUNCTIONS

SECTION 5 Cost Analysis

This section contains the cost factors and the costing method for each cost element for both Spacelab and user costs.

OPTION SPACELAB COSTING ANALYSIS PAGE ___ OF ___

COST ITEM	COST ELEMENT	COST FACTORS	COSTING METHOD	NOTES
1. CDMS	1.1 Hardware Modifications	1. Mass Memory Modification Allowing Random Access (CDMS)	1. (A) ESA Estimate (B) NASA Survey	o Based on Experiment Application Software Requirements
		2. Firm Ware Modification (CDMS)	2. NA (None Identified)	
		3. Display/Keyboard Modification (CDMS)	3. NA (None Identified)	
		4. Main Memory Addition (Experiment)	4. Memory Module Cost X Number Modules Required (ESA)	o Modifications to Experiment Computer are required Required for Backup Computer as Well
		5. Additional Data Bus (Experiment)	5. ESA Estimate	
		6. HMR Modification	6. NA (None Identified)	
		7. Additional Coupler to IOB for Added Data Bus (Experiment)	7. ESA Estimate	
		8. Additional RAU Capability Add 8 Digital Input/Output Channels/RAU (Experiment)	8. ESA Estimate	o Requires CDMS Functional Diagram
		9. Add Graphics Display (Storage Tube) (Experiment)	9. NASA Estimate (Survey)	

OPTION SPACELAB COSTING ANALYSIS PAGE ___ OF ___

COST ITEM	COST ELEMENT	COST FACTORS	COSTING METHOD	NOTES
	1.2 Subsystem Computer Software Development and Acceptance	1. Acceptance Test Development; Acceptance Review; and Installation at NASA	1. Average Cost/Package X Number of Packages + Travel Estimates. (Requires List of Packages and Instruction Count)	o Assumes no NASA Development Required ESA Procedures are ok.
	1.3 Subsystem Computer Software Maintenance	1. Maintenance	1. (A) Number of Assembly Instruction X Change Rate X Cost Per Assembly/Instruction (B) Number of HOL Statements X Change Rate X Cost Per HOL Statement	o Requires List of Packages and Instruction Count. o Mission Model
	1.4 Subsystem Computer Software Configuration Management, Release and Distribution	1. Configuration Management 2. Set Build (Includes Documentation and Distribution) and Set Verification.	1. Number of Modules Under Configuration Control X Average Cost Per Module. 2. Number of Sets to be Delivered X Average Cost Per Set.	o Requires List of Packages and List of Documentation. o Mission Model

OPTION SPACELAB COSTING ANALYSIS PAGE ___ OF ___

COST ITEM	COST ELEMENT	COST FACTORS	COSTING METHOD	NOTES
	1.5 Experiment Computer Software Development and Acceptance	1. Acceptance Test Development; Acceptance Review; and Installation at NASA. 2. Graphics Software Package	1. Average Cost/Package X Number of Packages + Travel Estimates. 2. NASA Estimate of Number of Instructions X Cost Per Instruction for Graphics Package.	o Does Not Include EAS o Requires List of Packages
	1.6 Experiment Computer Software Maintenance	1. Maintenance	1. (A) Number of Assembly Instructions X Change Rate X Cost Per Assembly Instruction. (B) Number of HOL Statements X Change Rate X Cost Per HOL Statement.	o Requires List of Packages and Number of Instructions o Mission Model
	1.7 Experiment Computer Software Configuration Management, Release and Distribution	1. Configuration Management 2. Set Build (Includes Documentation and Distribution) and Set Verification	1. Number of Modules Under Configuration Control X Average Cost Per Module 2. Number of Sets to be Delivered X Average Cost Per Set	o Requires List of Packages and List of Documentation. o Mission Model
2. EGSE	2.1 Hardware Modifications	1. Add Graphics Display (Storage Tube)	1. ESA or NASA Estimate	o Requires Functional Diagram of EGSE

OPTION SPACELAB COSTING ANALYSIS PAGE ___ OF ___

COST ITEM	COST ELEMENT	COST FACTORS	COSTING METHOD	NOTES
	2.2 Ground Checkout Software Development and Acceptance	1. Acceptance Test Development Acceptance Review; and Installation at NASA 2. Graphics Software Package	1. Average Cost/Package X Number of Packages + Travel 2. NASA Estimate of number of Instructions X Cost/Inst. for Graphics Package	o Requires List of Packages
	2.3 Ground Checkout Software Maintenance	1. New Flight Maintenance and Re-Flight Maintenance	1. (A) Number of Assembly Instructions X Change Rate X Cost Per Assembly Instruction. (B) Number of HOL Statements X Change Rate X Cost Per HOL Statement	o Requires List of Packages and Number of Instructions
	2.4 EGSE Ground Checkout Software Configuration Management, Release and Distribution	1. Configuration Management 2. Set Build (Includes Documentation and Distribution) and Set Verification	1. Number of Modules Under Configuration Control X Average Cost Per Module. 2. Number of Sets to be Delivered X Average Cost Per Set	o Requires List of Packages and List of Documentation o Mission Model
	2.5 EGSE Computer Software Production Set Development and Acceptance	1. Acceptance Test Development; Acceptance Test Review; and Installation at NASA	1. Average Cost Per Package X Number of Packages + Travel Estimate	o Requires List of Packages and Number of Instructions

OPTION SPACELAB COSTING ANALYSIS PAGE ___ OF ___

COST ITEM	COST ELEMENT	COST FACTORS	COSTING METHOD	NOTES
	2.6 EGSE Computer Software Production Set Maintenance	1. Maintenance	1. (A) Number of Assembly Instructions X Change Rate X Cost Per Assembly Instruction (B) Number of HOL Statements X Change Rate X Cost HOL Statement	o Requires List of Packages and Number of Instructions
	2.7 EGSE Computer Software Production Set Configuration Management, Release and Distribution	1. Configuration Management 2. Set Build (Includes Documentation and Distribution) and Set Verification	1. Number of Modules Under Configuration Control X Average Cost Per Module 2. Number of Sets to be Delivered X Average Cost Per Set	o Requires List of Packages and Number of Instructions o Not Tied To Number of Flights
3. STIL	3.1 Facility Acquisition	1. Host Computer Equipment 2. Computer Interface Device 3. Simulation Computer 4. CDMS Equipment 5. EGSE Equipment 6. Facility Integration/Testing 7. Consumable Stock 8. Facility Modifications	1. Buy Existing Equipment Identify and Buy Any Required Additions 2. Buy Off-Shelf and Engineering Estimate 3. Use Purchase Data Available from Previous Studies 4. ESA Estimate CDMS Cost 5. Not Required	o Requires Functional Diagram of STIL o List of Existing Equipment o Schedules

OPTION... SPACELAB COSTING ANALYSIS PAGE ___ OF ___

COST ITEM	COST ELEMENT	COST FACTORS	COSTING METHOD	NOTES
	3.1 Facility (continued)	9. Engineering Design	6. Engineering Estimate of Required Manpower 7. Engineering Estimate of Required Disk Packs Tapes, Paper, Etc. 8. Engineering Estimate of Modifications to 4708 9. Engineering Estimate of Manpower	o Lease/ Purchase Option Costs
	3.2 Facility Main-Tenance and Operation	1. Equipment Maintenance 2. Facility Operation 3. Consumables 4. Occupancy (Space) 5. Special Purpose Equipment Spares	1. 10% of Purchase Price/Yr. 2. Number of Shifts X 5 X Cost Per Man/Yr. 3. Use History Data for Similar Installation (CPU Use X Cost of Each Consumable) 4. No Charge (Gov. Facility) 5. 8% of Purchase Cost Per Yr.	o Requires Ground Rules on Number of Shifts
	3.3 Host and Sim-ulation Computer Support Soft-ware Develop-ment and Acceptance	1. STIL Development Software 2. STIL Procured Software 3. ESA Δ Development Cost for Identified Hardware Modifications	1. Number of Instructions X Cost Per Instruction 2. Vendor License 3. No Cost to U. S.	o Requires List of Support Software and Number of Instructions

OPTION SPACELAB COSTING ANALYSIS PAGE ___ OF ___

COST ITEM	COST ELEMENT	COST FACTORS	COSTING METHOD	NOTES
	3.3 (continued)	4. Conversion of ESA Delivered Software 5. Acceptance Test Development and Acceptance Review	4. (A) Simulation Computer Software Number of Instructions X Cost Per Instruction (B) Host Conversion % Change X Number of Instruction X Cost Per Instruction 5. Average Cost Per Package X Number of Packages + Travel Estimate	o Requires List of Packages
	3.4 Host and Simulation Computer Support Software Maintenance and Distribution	1. Maintenance 2. Distribution (Documentation Package Generation)	1. Number of Instructions X Rate of Change X Cost Per Instruction 2. Number of Sets to be Distributed X Average Cost Per Set	o Requires List of Support Software Packages and Number of Instructions o Mission Model

OPTION USER COSTING ANALYSIS PAGE ___ OF ___

COST ITEM	COST ELEMENT	COST FACTORS	COSTING METHOD	NOTES
4. Experiment	4.1 Experiment Application Software Development	1. Software Development 2. Common Software 3. Host Computer Time 4. Simulation Computer Time 5. Host Computer Time DEP Software 6. Simulation Computer Time DEP Software 7. Travel 8. Training	1. Number of Instructions X Cost/Instruction 2. Number of Instructions X Cost/Instruction 3. Number of Hours X Cost/Hour 4. Number of Hours X Cost/Hour 5. Number of Hours X Cost/Hour 6. Number of Hours X Cost/Hour 7. # Man Yrs. X Travel Cost Per Man Yr. 8. # of Programmers X Cost Per Programmer	o Requires List of Functions o Mission Model o Payload Data (Level A - GDC Report)
	4.2 Experiment Application Software Maintenance	1. Experiment Unique Software 2. Experiment Common Software 3. Host Computer Time 4. Simulation Computer Time 5. Host Computer Time DEP Software	1. Number of Instructions X Rate of Change X Cost/Instruction 2. Number of Instructions X Rate of Change X Cost/Instruction 3. Number of Hours X Cost/Hour 4. Number of Hours X Cost/Hour	o List of Applications o Mission Model o Payload Data

OPTION _____ USER _____ COSTING ANALYSIS PAGE ___ OF ___

COST ITEM	COST ELEMENT	COST FACTORS	COSTING METHOD	NOTES
	4.2 Experiment Application Software Maintenance (continued)	6. Simulation Computer Time DEP Software 7. Travel	5. Number of Hours X Cost/Hour 6. Number of Hours X Cost/Hour 7. # Man Yrs. X Travel Cost/Man Yr.	(Level A - GDC Report)
	4.3 Experiment Application Software Integrated Verification	1. Integrated Verification Activities 2. Host Computer Time 3. Simulation Computer Time 4. Integrated Verification Simulation Software	1. Number of Software Packages a. Common b. Unique X Cost/Package 2. Number of Hours X Cost/Hour 3. Number of Hours X Cost/Hour 4. # of Modules X Cost/Module	o Ground Operations Timelines
	4.4 Preflight Checkout Software Development	1. Software Development 2. Common Software 3. Host Computer Time 4. Simulation Computer Time	1. Number of Instructions X Cost/Instruction 2. Number of Instructions X Cost/Instruction 3. Number of Hours X Cost/Hour	o List of Applications o Mission Model o Payload Data

OPTION: USER COSTING ANALYSIS PAGE ___ OF ___

COST ITEM	COST ELEMENT	COST FACTORS	COSTING METHOD	NOTES
	4.4 Preflight Check-out Software Development (continued)	5. Travel	4. Number of Hours X Cost/Hour 5. # of Man Yrs. X Travel Cost/Man Yr.	
	4.5 Preflight Check-out Software Maintenance	1. Experiment Unique Software 2. Experiment Common Software 3. Host Computer Time 4. Simulation Computer Time 5. Travel	1. Number of Instructions X Rate of Change X Cost/Instruction 2. Number of Instructions X Rate of Change X Cost/Instruction 3. Number of Hours X Cost/Hour 4. Number of Hours X Cost/Hour 5. # Man Yrs. X Travel Cost/Man Yr.	o List of Applications o Mission Model o Payload Data o (Level A-GDC Report)
	4.6 EAS Dependant STIL Hardware Supplement	1. Host Main Memory 2. RJE 3. Display Terminals 4. Maintenance of Added Hardware	1. GSA 2. GSA 3. GSA 4. 8% of Purchas Price Per Yr.	o Mission Model o M&S Final Report on STIL Sizing
	4.7 EAS Dependant STIL Software Supplement	1. Procured Software 2. Maintenance	1. Vendor Cost 2. # Statements X Rate of Change X Cost/Statement	

OPTION USER COSTING ANALYSIS PAGE ___ OF ___

COST ITEM	COST ELEMENT	COST FACTORS	COSTING METHOD	NOTES
	4.8 Experiment Real-Time Simulation Software Development	1. Software Development 2. Host Computer Time 3. Simulation Computer Time 4. Travel	1. Number of Statements X Cost/Statement 2. Number of Host Computer Hours X Cost/Hour 3. Number of Simulation Computer Hours X Cost/Hour 4. # Man Yrs. X Travel Cost/Man Yr.	
	4.9 Experiment Real-Time Simulation Software Maintenance	1. Maintenance 2. Host Computer Time 3. Simulation Computer Time 4. Travel	1. Number of Statements X Change Rate X Cost/Statement 2. Number of Host Computer Hours X Cost/Hour 3. Number of Simulation Computer Hours X Cost/Hour 4. # Man Yrs. X Travel Cost/Man Yr.	

OPTION ___USER _____ COSTING ANALYSIS PAGE ___ OF ___

[illegible]	COMPONENT	COST FACTORS	COSTING METHOD	NOTES
5. Dedicated Experiment Processor	5.1 Experiment Processor Acquisition	1. Processor Hardware 2. Qualification 3. Special I/O (RAU Equivalent) *4. Special Test Equipment 5. Peripherals 6. Peripherals Qualification *Includes Interface Hardware to STIL Simulation Computer	1. Survey/Projection 2. Data From Previous Efforts 3. Engineering Estimate 4. Engineering Estimate Based on Previous Procurements 5. Survey/Projection 6. Engineering Estimate	o Requires Functional Diagrams of DEP System
	5.2 Experiment Processor Maintenance	1. Maintenance 2. Distribution 3. Re-furbishment	1. 8% of Purchase Per Yr. 2. Engineering Estimate of Number of Man Hours 3. Number of Unit Flight X Cost Per Unit Re-Furbishment	o Number of Flights Per Unit o Mission Model
	5.3 DEP Software	1. Operating System Development 2. Support Software Develoment (HAL, Goal, Fortran) (Assembly Language)	1. Number of Instructions X Cost Per Instruction 2. (A) Vendor Lease (B) Number of Instructions X Cost Per Instruction	o List of Required Packages and Estimate of number of instructions

OPTION USER COSTING ANALYSIS PAGE ___ OF ___

COST ITEM	COST ELEMENT	COST FACTORS	COSTING METHOD	NOTES
	5.4 DEP Software Maintenance and Distribution	1. Maintenance 2. Distribution	1. Number of Instructions X Rate of Change X Cost Per Instruction 2. Engineering Estimate	o List and Size of Packages Required

OPTION USER COSTING ANALYSIS PAGE ___ OF ___

COST ITEM	COST ELEMENT	COST FACTORS	COSTING METHOD	NOTES
6. Real Time Simulation Test Set (RTSTS)	6.1 RTSTS Acquisition	1. Engineering Design 2. Simulation Computer 3. Dedicated Experiment Processor (DEP) Interface 4. RTSTS Integration Testing 5. Consumables Stock	1. Engineering Judgement 2. Vendor Data 3. Engineering Estimate 4. Engineering Estimate 5. Engineering Estimate	o Functional Diagram of RTSTS o List of Functions
	6.2 RTSTS Maintenance Operation and Distribution	1. Maintenance 2. Distribution/Sustaining Engineering 3. Operation 4. Special Purpose Equipment Spares 5. Consumables 6. Re-Furbishment 7. Facility Mods	1. 8% of Equipment Cost 2. Engineering Judgement 3. N/A 4. 8% of Equipment Cost/Yr. 5. Engineering Estimate 6. Engineering Estimate 7. Engineering Estimate	
	6.3 RTSTS Support Software Development	1. Development 2. Procurement	1. Number of Instructions X Cost/Instruction 2. Vendor Price	o List of Required Software

OPTION USER COSTING ANALYSIS PAGE ___ OF ___

COST ITEM	COST ELEMENT	COST FACTORS	COSTING METHOD	NOTES
	6.4 RTSTS Support Software Maintenance and Distribution	1. Maintenance 2. Distribution	1. Number of Instructions X Rate of Change X Cost/ Instruction 2. Engineering Estimate	o List of Support Software o Distribution Guidelines o Documentation required

OPTION USER _____ COSTING ANALYSIS PAGE ___ OF ___

COST ITEM	COST ELEMENT	COST FACTORS	COSTING METHOD	NOTES
7. PI Host Computer Software	7.1 PI Host Computer Software	1. Distribution 2. Installation 3. Maintenance	1. 2 Set Builds (Support Software + Simulation Software) X Cost/Set 2. Engineering Effort Estimate X Cost/Man Wk. Cost/Man Week = $96.20 3. Level of Effort X Cost/ Man Week	

SECTION 6 Cost Data Matrix

This section contains a matrix of the data generated from the software requirements data base and summarized by year for the Spacelab mission model.

Section 6 Cost Data Matrix

Introduction

The various cost estimates for each cost element of each Spacelab configuration/software development option combination were derived using the data contained in a Cost Data Matrix described in this section. The Cost Data Matrix contains estimates of the experiment applications software (EAS) development and EAS maintenance requirements for each year of the Spacelab operational phase in support of the current Spacelab mission model. The software estimates were derived from the results of a Spacelab payload software requirements analysis effort performed for MSFC by General Dynamics and reported in "Spacelab Payload Accommodations Study," Report Number CASD-NAS76-010, dated March 5, 1976.

Matrix Development Approach

Requirements estimates for the current candidate Spacelab payload elements for main memory (in numbers of instructions) and computation speed (in equivalent adds per second) were extracted from the above identified report. The main memory requirements estimates were converted to the equivalent number of high order language (HOL) statements.[1]

A matrix was prepared whose columns each represented a distinct Spacelab mission, grouped chronologically by year (thus having 226 columns), and whose rows each represented a distinct Spacelab payload element. The three left-most columns of the matrix contained estimates by payload element for main memory, in both instructions and statements, and for computation speed. Each entry in the matrix corresponded to the assignment of a particular payload element (determined by the row occupied by that entry) to a particular mission (determined by the column occupied by that entry). The entry itself contained the number of HOL statements to be generated for the particular payload element for that specific mission.

Since EAS development and maintenance estimates by year were fundamentally based on the payload element assignments by mission by year, the mission composition by payload element was required. This was obtained from a table contained in the previously mentioned report.

---

[1] 1 HOL Statement $\cong$ 5 machine language instructions.

FOLDOUT FRAME /

SPACELAB SOFTWARE REQUIREMENTS
PAYLOAD ELEMENT/MISSION

PAYLOAD ELEMENT	MAIN MEMORY (INSTRUCTIONS)	MAIN MEMORY (HOL) (STATEMENTS)	CPU LOAD EAD'S/SEC	FY 83			FY 84											
				SP1b	ST2a	ST2b	AST10d7	AST11b	AST11b		LS2a30	MU-2	NN/D15	NN/D16a	NN/D16a	OA-1a	PHY 6a + 6b	[illegible]
AS-01-S	12,180	2,436	178,700															
AS-03-S	2,480	496	4,000															
AS-04-S	7,250	1,450	189,640				[290]											
AS-05-S	1,240	248	4,000															
AS-07-S	17,360	3,472	119,000															
AS-09-S	7,450	1,482	50,000															
AS-10-S	1,240	248	8,000															
AS-15-S	17,050	3,410	180,000				(3410)											
AS-18-S	7,750	1,550	50,000															
AS-19-S	1,240	248	4,000															
AS-20-S	17,050	3,410	180,000															
HE-11-S	2,480	496	20,000									99						
HE-12-S	558	112	2,000														22	
HE-13-S	1,116	223	4,000														67	
HE-16-S	1,240	248	4,000															
HE-18-S	1,116	223	4,000															
SO-11-S	4,340	868	2,500,000															
SO-12-S	2,635	527	2,500,000					[105]										
SO-15-S	4,340	868	2,500,000															
SO-17-S	4,340	868	2,500,000									[174]						
AP-06-S	26,100	5,220	225,000															
AP-09-S	2,140	428	18,160															
AP-13-S	1,670	334	34,120															
EO-01-S	4,110	822	10,450															
EO-06-S	3,782	756	150,000											227	151			
EO-19-S	1,010	202	7,570									40						
EO-20-S	1,550	310	8,030													124		
OP-02-S	1,200	240	70,000											72	48			
OP-03-S	4,480	896	30,210													289		
SP-13-S	2,635	527	17,600										(527)					
SP-14-S	3,906	781	26,600															
SP-15-S	2,635	527	17,900	211														
SP-31-S	3,240	648	22,200													259		
LS-09-S	18,000	3,600	120,000							360	360							
LS-13-S	1,930	386	8,128															
ST-31-S	N/A	N/A	N/A															
ST-68-S	9,450	1,890	41,000		567	378												
CN-04-S	3,720	744	40,012													298		
CN-05-S	N/A	N/A	N/A															
CN-08-S	1,130	226	3,988													66		
APE-01	2,440	488	11,638															
APE-07	2,130	426	8,940															
ASE-01	1,070	214	2,038															
EOE-01	1,860	372	3,798															
SPE-01	1,070	214	7,646															
SPE-60/86	1,380	276	3,615															
STE-10	2,200	440	21,270															

LEGEND

( ) NEW DEVELOPMENT CENTRAL
< > NEW DEVELOPMENT DEP
MAINTENANCE CENTRAL
[ ] MAINTENANCE DEP

ORIGINAL PAGE IS
OF POOR QUALITY

FOLDOUT FRAME 2

ÚIREMENTS
ISSION

FY 84												FY 85											
NN/D16a	NN/D16s	OA-1a	PHY 6a + 6b	PHY 7b	PHY 7c	SP1a	SP1b	SP1b	ST2a	ST2b	ST2c	AST10c	AST10d7	AST11c7	LS2a30	LS2a30	MU-1	6P2-2	NN/D15	NN/D16a	NN/D16b	OA-1b	PHY 6a + 6b
												731											
												198											
													[145]								[145]		
													1384										
																					98		
																		80					
			22																				11
			37																				45
														[53]									
																		[87]					
				522	522																		
																	128						
																	100						
																	247					164	
227	151																			76			
																	61	20					
		124																					
72	48																			24			
		200																				172	
																			211				
						234													156				
							168	105											53				
		250																					
															360	360							
																	116						
																	0						
									169	169	169												
		288																					
																						8	
		66																					
																	98						
																	148						
																	128						
																	64						
																	112						
																	64						
																	93						
																	132						

OUT FRAME /

PAYLOAD ELEMENT	MAIN MEMORY (INSTRUCTIONS)	MAIN MEMORY (HOL) (STATEMENTS)	CPU LOAD EAD'S/SEC	FY 85															
				PHY 6c + 6d	PHY 7a	PHY 7c	SP1a	SP1b	SP1b	ST2a	ST2b	ST2c	AST10f	AST10i	AST11b	AST11c30	LS2a30	LS2a30	MU-
AS-01-S	12,180	2,436	178,700																
AS-03-S	2,480	496	4,000																
AS-04-S	7,250	1,450	169,640																
AS-05-S	1,240	248	4,000																
AS-07-S	17,360	3,472	119,000										(3472)						
AS-08-S	7,440	1,488	50,000											(1488)					
AS-10-S	1,240	248	8,000																
AS-15-S	17,050	3,410	180,000																
AS-18-S	7,750	1,550	50,000																
AS-19-S	1,240	248	4,000																
AS-20-S	17,050	3,410	180,000																
HE-11-S	2,480	496	20,000	50															50
HE-12-S	558	112	2,000																
HE-13-S	1,116	223	4,000																
HE-16-S	1,240	248	4,000	99															
HE-18-S	1,116	223	4,000																
SO-11-S	4,340	868	2,500,000																
SO-12-S	2,635	527	2,500,000												(53)	(53)			
SO-15-S	4,340	868	2,500,000																
SO-17-S	4,340	868	2,500,000																(87)
AP-06-S	26,100	5,220	225,000		522	522													
AP-09-S	2,140	428	18,180																
AP-13-S	1,670	334	34,120																
EO-01-S	4,110	822	10,460																
EO-08-S	3,782	756	150,000																
EO-19-S	1,010	202	7,570																20
EO-20-S	1,550	310	8,030																
OP-02-S	1,200	240	70,000																
OP-03-S	4,480	896	30,210																
SP-13-S	2,635	527	17,600																
SP-14-S	3,906	781	26,600				78												
SP-15-S	2,635	527	17,600					53	53										
SP-31-S	3,240	648	22,200																
LS-09-S	18,000	3,600	120,000														360	360	
LS-13-S	1,930	386	8,126																
ST-31-S	N/A	N/A	N/A																
ST-58-S	9,450	1,890	41,000							189	189	189							
CN-04-S	3,720	744	40,012																
CN-05-S	N/A	N/A	N/A																
CN-08-S	1,130	226	3,890																
APE-01	2,440	488	11,630																
APE-07	2,130	426	8,940																
ASE-01	1,070	214	2,030																
EOE-01	1,860	372	3,780																
SPE-01	1,070	214	7,640																
SPE-80/85	1,380	276	3,015																
STE-10	2,200	440	21,270																

LEGEND

NEW DEVELOPMENT CENTRAL
NEW DEVELOPMENT DEP
MAINTENANCE CENTRAL
MAINTENANCE DEP

ORIGINAL PAGE IS
OF POOR QUALITY

FOLDOUT FRAME 2

	FY 86																					FY 87			
0f	AST10i	AST11b	AST11c30	LS2a30	LS2a30	MU-2	MU-2	NN/D15	NN/D16a	NN/D16a	OA-1a	PHY6a30	PHY 7b	PHY 7c	SP1a'	SP1b	SP1b	ST2a	ST2b	ST2a	AST10j	AST10k	AST11d30	LS2a30
																					[146]	[146]		
2)	(1468)																							
																					(248)			
																					74			
																						(3410)		
						50	50																	
												(223)												
		[53]	[53]																					
																							<868>	
						[87]	[87]						522	522										
									76	76														
						20	20																	
											93													
									24	24														
											90													
								158																
															78									
								53								53	53							
											194													
				380	380																			360
																		189	189	189				
											223													
											23													

FOLDOUT FRAME /

PAYLOAD ELEMENT	MAIN MEMORY (INSTRUCTIONS)	MAIN MEMORY (HOL) (STATEMENTS)	CPU LOAD EAD'S/SEC	LS2a30	MU-1	MU-2	MU-2	NN/D15	NN/D16a	NN/D16b	OA-1a	OA-1b	PHY 6c + 6d	PHY6a30	PHY 7b	PHY 7c	SP1a	SP1b
AS-01-S	12,180	2,436	178,700															
AS-03-S	2,480	496	4,000															
AS-04-S	7,250	1,450	169,640							[145]								
AS-05-S	1,240	248	4,000															
AS-07-S	17,360	3,472	115,000															
AS-09-S	7,440	1,488	50,000															
AS-10-S	1,240	248	8,000															
AS-15-S	17,050	3,410	180,000															
AS-18-S	7,750	1,550	50,000															
AS-19-S	1,240	248	4,000							50								
AS-20-S	17,050	3,410	180,000															
HE-11-S	2,480	496	20,000			98	50						50					
HE-12-S	558	112	2,000															
HE-13-S	1,116	223	4,000															
HE-16-S	1,240	248	4,000										74					
HE-18-S	1,115	223	4,000											89				
SO-11-S	4,340	868	2,500,000															
SO-12-S	2,635	527	2,500,000															
SO-15-S	4,340	868	2,500,000															
SO-17-S	4,340	868	2,500,000			[87]	[87]											
AP-06-S	26,100	5,220	225,000												522	522		
AP-09-S	2,140	428	18,160		86													
AP-13-S	1,670	334	34,120		67													
EO-01-S	4,110	822	10,480		164							82						
EO-06-S	3,782	756	150,000						76									
EO-19-S	1,010	202	7,570		151	20	20											
EO-20-S	1,550	310	8,030								62							
OP-02-S	1,200	240	70,000						24									
OP-03-S	4,480	896	30,210								90	90						
SP-13-S	2,635	527	17,800					105										
SP-14-S	3,906	781	26,600														78	
SP-15-S	2,635	527	17,800					53										53
SP-31-S	3,240	648	22,200								130							
LS-09-S	18,000	3,600	120,000	360														
LS-13-S	1,930	386	8,120		77													
ST-31-S	N/A	N/A	N/A		0													
ST-58-S	9,450	1,890	41,000															
CN-04-S	3,720	744	40,012								149							
CN-05-S	N/A	N/A	N/A									0						
CN-06-S	1,130	226	3,890		45						23							
APE-01	2,440	488	11,630		98													
APE-07	2,130	426	8,940		85													
ASE-01	1,070	214	2,030		43													
EOE-01	1,860	372	3,780		74													
SPE-01	1,070	214	7,640		43													
SPE-80/85	1,380	276	3,015		55													
STE-10	2,200	440	21,270		88													

LEGEND

( ) NEW DEVELOPMENT CENTRAL

< > NEW DEVELOPMENT DEP

MAINTENANCE CENTRAL

[ ] MAINTENANCE DEP

ORIGINAL PAGE IS
OF POOR QUALITY

FOLDOUT FRAME 2

										FY 89													
PHY6a30	PHY 7b	PHY 7c	SP1a	SP1b	SP1b	ST2a	ST2b	ST2a	ST2d	AST10d30	AST11a7	AST11a30	LS2a30	LS2a30	MU-2	MU-2	MU-2	NN/D15	NN/D16a	NN/D16a	OA-1a	OA-1b	PHY 6c + 6d
										[145]													
										1023													
															80	50	50						50
89																							50
											<868>	[347]											
															[87]	[87]	[87]						
	522	522																					
																						82	
																			76	76			
															20	20	20				31		
																			24	24			
																					90	90	
																		53					
			78																				
				53	53													53					
																					65		
													360	360									
						189	189	189	189														
																					74		
																						0	
																					23		

UT FRAME 1

PAYLOAD ELEMENT	MAIN MEMORY (INSTRUCTIONS)	MAIN MEMORY (HOL) (STATEMENTS)	CPU LOAD EAD'S/SEC	FY 90															
				AST10d 30	AST10k 30	AST11e 7	AST11e 30	LS2a 30	LS2a 30	MU-1	MU-2	MU-2	NN/D16a	NN/D16a	OA-1a	OA-1b	OA-1b	PHY 6c + 6d	PHY6c
AS-01-S	12,180	2,436	178,700																
AS-03-S	2,480	496	4,000																
AS-04-S	7,250	1,450	169,640	[145]	[145]														
AS-05-S	1,240	248	4,000																
AS-07-S	17,360	3,472	119,000																
AS-09-S	7,440	1,488	50,000																
AS-10-S	1,240	248	8,000																
AS-15-S	17,050	3,410	180,000	341															
AS-18-S	7,750	1,550	50,000																
AS-19-S	1,240	248	4,000																
AS-20-S	17,050	3,410	180,000		1364														
HE-11-S	2,480	496	20,000								50	50						50	
HE-12-S	558	112	2,000																
HE-13-S	1,116	223	4,000																
HE-16-S	1,240	248	4,000															25	
HE-18-S	1,116	223	4,000																22
SO-11-S	4,340	868	2,500,000			[868]	[347]												
SO-12-S	2,635	527	2,500,000																
SO-15-S	4,340	868	2,500,000																
SO-17-S	4,340	868	2,500,000								[87]	[87]							
AP-06-S	26,100	5,220	225,000																
AP-09-S	2,140	428	18,160							43									
AP-13-S	1,670	334	34,120							33									
EO-01-S	4,110	822	10,460							82						82	82		
EO-06-S	3,782	756	150,000										76	76					
EO-19-S	1,010	202	7,570							20	20	20			31				
EO-20-S	1,550	310	8,030										24	24					
OP-02-S	1,200	240	70,000												90	90	90		
OP-03-S	4,480	896	30,210																
SP-13-S	2,635	527	17,600																
SP-14-S	3,656	731	26,600																
SP-15-S	2,635	527	17,600												85				
SP-31-S	3,240	648	22,200																
LS-09-S	18,000	3,600	120,000					360	360										
LS-13-S	1,930	386	8,126							39									
ST-31-S	N/A	N/A	N/A							0									
ST-58-S	9,450	1,890	41,000												74				
CN-04-S	3,720	744	40,012													0	0		
CN-05-S	N/A	N/A	N/A												23				
CN-08-S	1,130	226	3,890							23									
APE-01	2,440	488	11,630							49									
APE-07	2,130	426	8,940							43									
ASE-01	1,070	214	2,030							21									
EOE-01	1,860	372	3,760							37									
SPE-01	1,070	214	7,640							21									
SPE-80/85	1,390	276	3,015							28									
STE-10	2,200	440	21,270							44									

GEND

) NEW DEVELOPMENT CENTRAL

> NEW DEVELOPMENT DEP MAINTENANCE CENTRAL

] MAINTENANCE DEP

ORIGINAL PAGE IS OF POOR QUALITY

FOLDOUT FRAME 2

FY 90																		FY 91						
D16a	NN/D16a	OA-1a	OA-1b	OA-1b	PHY 6c + 6d	PHY 6a 30	PHY 7b	PHY 7c	SP1a	SP1b	SP1b	SP1b	ST2a	ST2b	ST2c	ST2d	ST2d	AST10k 30	AST10l	AST11e 30	LS2a 20	LS2a 30	MU-1	MU-2
																			149					
																		[146]	[146]					
																			98					
																			25					
																		1023						
					50																			50
					25																			
						22																		
																				[280]				
																								[87]
							522	522																
																							43	
																							33	
			82	82																			82	
6	76																							
		31																					39	29
4	24																							
		90	90	90																				
									76															
										53	53	53												
		65																						
																					360	360		
																							38	
													189	189	189	189	189						0	
		74																						
			0	0																				
		23																						
																							23	
																							48	
																							43	
																							21	
																							37	
																							21	
																							28	
																							44	

FOLDOUT FRAME /

PAYLOAD ELEMENT	MAIN MEMORY (INSTRUCTIONS)	MAIN MEMORY (HOL) (STATEMENTS)	CPU LOAD EAD'S/SEC	FY 91															
				MU-2	NN/D15	NN/D16a	NN/D16a	NN/D16b	OA-1a	OA-1a	OA-1b	OA-1b	PHY 6c + 6d	PHY 6e 30	PHY 7a	PHY 7c	SP1a	SP1b
AS-01-S	12,180	2,436	178,700															
AS-03-S	2,480	496	4,000															
AS-04-S	7,250	1,450	189,649					[145]										
AS-05-S	1,240	248	4,000															
AS-07-S	17,360	3,472	119,000															
AS-09-S	7,440	1,488	50,000															
AS-10-S	1,240	248	8,000															
AS-15-S	17,050	3,410	180,000															
AS-18-S	7,750	1,550	50,000															
AS-19-S	1,240	248	4,000					25										
AS-20-S	17,050	3,410	180,000															
HE-11-S	2,480	496	20,000	50									50					
HE-12-S	558	112	2,000															
HE-13-S	1,116	223	4,000															
HE-16-S	1,240	248	4,000										50					
HE-18-S	1,116	223	4,000											22				
SO-11-S	4,340	868	2,500,000															
SO-12-S	2,635	527	2,500,000															
SO-15-S	4,340	868	2,500,000															
SO-17-S	4,340	868	2,500,000	[87]														
AP-06-S	26,100	5,220	225,000												522	522		
AP-09-S	2,140	428	18,160															
AP-13-S	1,670	334	34,129															
EO-01-S	4,110	822	10,460							82	82							
EO-06-S	3,782	756	150,000		76	76												
EO-19-S	1,010	202	7,570	20														
EO-20-S	1,550	310	8,030					31	31									
OP-02-S	1,200	240	70,000		24	24												
OP-03-S	4,480	896	30,210					90	90	90	90							
SP-13-S	2,635	527	17,600	53														
SP-14-S	3,908	781	26,600														78	
SP-15-S	2,6[illegible]	527	17,600	53														53
SP-31-S	[illegible],240	648	22,200					65	65									
LS-09-S	18,000	3,600	120,000															
LS-13-S	1,930	386	8,126															
ST-31-S	N/A	N/A	N/A															
ST-58-S	9,450	1,890	41,000															
CN-04-S	3,720	744	40,012					74	74									
CN-05-S	N/A	N/A	N/A							8	8							
CN-08-S	1,130	226	3,890					23	23									
APE-01	2,440	488	11,630															
APE-07	2,130	426	8,940															
ASE-01	1,070	214	2,030															
EOE-01	1,860	372	3,760															
SPE-01	1,070	214	7,640															
SPE-80/85	1,380	276	3,015															
STE-10	2,200	440	21,270															

LEGEND

( ) NEW DEVELOPMENT CENTRAL

< > NEW DEVELOPMENT DEP

MAINTENANCE CENTRAL

MAINTENANCE

ORIGINAL PAGE IS OF POOR QUALITY

FOLDOUT FRAME 2

FY 91																								
Y 6c 6d	PHY 6e 30	PHY 7a	PHY 7c	SP1a	SP1b	SP1b	SP1b	ST2a	ST2b	ST2c	ST2d	ST2d												
9																								
9																								
	22																							
		522	522																					
				78																				
					53	53	53																	
								189	189	189	189	189												

FOLDOUT FRAME 1

PAYLOAD ELEMENT	MAIN MEMORY (INSTRUCTIONS)	MASS MEMORY (HOL STATEMENTS)	CPU LOAD (EAD'S/SEC)	FY 80		FY 81						FY 82						
				MU-1	PHY 6b	AST10a	LS2a07	LS2a07	MU-1	PHY 7a	ST2a	AST10a	AST11b	LS2a07	LS2a07	MU-2	NN/D-16a	OA-1a
AS-01-S	12,180	2,436	178,700			(2436)						(974)						
AS-03-S	2,480	496	4,000															
AS-04-S	7,250	1,450	169,840			<1450>						[580]						
AS-05-S	1,240	248	4,000															
AS-07-S	17,360	3,472	119,000															
AS-08-S	7,440	1,488	50,000															
AS-10-S	1,240	248	8,000															
AS-15-S	17,050	3,410	180,000															
AS-12-S	7,750	1,550	50,000															
AS-19-S	1,240	248	4,000															
AS-20-S	17,050	3,410	180,000															
HE-11-S	2,480	496	20,000													(496)		
HE-12-S	558	112	2,000		(112)													
HE-13-S	1,116	223	4,000															
HE-16-S	1,240	248	4,000															
HE-18-S	1,116	223	4,000															
SO-11-S	4,340	868	2,500,000															
SO-12-S	2,635	527	2,500,000										<527>					
SO-15-S	4,340	868	2,500,000															
SO-17-S	4,340	868	2,500,000													<868>		
AP-06-S	26,100	5,220	225,000							(5220)								
AP-09-S	2,140	428	18,180	(428)					171									
AP-13-S	1,670	334	34,120	(334)					134									
EO-01-S	4,110	822	10,460	(822)					329									
EO-06-S	3,782	756	150,000														(756)	
EO-19-S	1,010	202	7,570	(202)												(202)		
EO-20-S	1,550	310	8,030															
OP-02-S	1,200	240	70,000														(240)	
OP-03-S	4,480	896	30,210															(896)
SP-13-S	2,635	527	17,600															
SP-14-S	3,906	781	26,600															
SP-15-S	2,635	527	17,600															
SP-31-S	3,240	648	22,200															(648)
LS-09-S	18,000	3,600	120,000				(3600)	1440						1080	720			
LS-13-S	1,930	386	8,126	(386)					154									
ST-31-S	N/A	N/A	N/A	0														
ST-58-S	9,450	1,890	41,000								(1890)							
CN-04-S	3,720	744	40,012															(744)
CN-05-S	N/A	N/A	N/A															
CN-08-S	1,130	226	3,890	(226)				90										(90)
APE-01	2,440	488	11,630	(488)				195										
APE-07	2,130	426	8,940	(426)				170										
ASE-01	1,070	214	2,030	(214)				86										
EOE-01	1,860	372	3,760	(372)				140										
SPE-01	1,070	214	7,640	(214)				86										
SPE-90/95	1,380	276	3,815	(276)				110										
STE-10	2,200	440	21,270	(440)				176										

LEGEND

( ) NEW DEVELOPMENT CENTRAL
< > NEW DEVELOPMENT DEP
MAINTENANCE CENTRAL
[ ] MAINTENANCE DEP

ORIGINAL PAGE IS
OF POOR QUALITY

FOLDOUT FRAME 2

FY 82											FY 83													
LS2a07	LS2a07	MU-2	NN/D-16a	OA-1a	PHY 6a + 6b	PHY 7a	SP1a	SP1b	ST2a	AST10b	AST11b	AST11b	LS2a30	LS2a30	MU-2	MU-2	NN/D-16a	OA-1b	PHY 6a + PHY 6b	PHY 6b	PHY 6c + PHY 6d	PHY 7c	SP1a
										(196)													
										[435]													
										(248)													
										(248)													
		(496)			46										198	149			34	80			
					(223)														89				
																				(248)			
											[211]	[158]											
		<368>				2068									[347]	[260]					1586	1044	
																		329					
																	302						
			(756)																				
		(202)													81	81							
																	96						
			(240)																				
				(896)														358					
							(781)																312
								(527)															
				(648)																			
1080	720												360	360									
									756														
				(744)																			
																		6					
				(90)																			

FOLDOUT FRAME 1

PAYLOAD ELEMENT	MAIN MEMORY (INSTRUCTIONS)	MEMORY (HOL) (STATEMENTS)	CPU LOAD EADS/SEC	FY 88														
				PHY6a30	PHY 7a	PHY 7c	SP1a	SP1b	SP1b	ST2a	ST2b	ST2c	ST2d	AST10d 30	AST10m	AST11c 30	LS2a30	LS2a30
AS-01-S	12,180	2,436	178,700															
AS-03-S	2,480	496	4,000															
AS-04-S	7,250	1,450	1[illegible],640											[145]	[145]			
AS-05-S	1,240	248	4,000															
AS-07-S	17,360	3,472	119,000															
AS-08-S	7,440	1,488	50,000															
AS-10-S	1,240	248	8,000															
AS-15-S	17,050	3,410	180,000											682				
AS-18-S	7,750	1,550	60,000												(1550)			
AS-19-S	1,240	248	4,000															
AS-20-S	17,050	3,410	180,000															
HE-11-S	2,480	496	20,000															
HE-12-S	558	112	2,000															
HE-13-S	1,116	223	4,000															
HE-16-S	1,240	248	4,000															
HE-18-S	1,116	223	4,000	67														
SO-11-S	4,340	868	2,500,000													[260]		
SO-12-S	2,635	527	2,500,000															
SO-15-S	4,340	868	2,500,000															
SO-17-S	4,340	868	2,500,000															
AP-06-S	26,100	5,220	225,000		522	522												
AP-08-S	2,140	428	18,180															
AP-13-S	1,670	334	34,[illegible]20															
EO-01-S	4,110	822	10,460															
EO-06-S	3,782	756	150,000															
EO-19-S	1,010	202	7,570															
EO-20-S	1,550	310	8,030															
OP-62-S	1,200	240	70,800															
OP-63-S	4,480	896	30,210															
SP-13-S	2,635	527	17,800															
SP-14-S	3,906	781	26,800				78											
SP-15-S	2,635	527	17,600					53	53									
SP-31-S	3,240	648	22,200															
LS-09-S	18,000	3,600	120,000														360	360
LS-13-S	1,930	386	8,128															
ST-31-S	N/A	N/A	N/A															
ST-58-S	9,450	1,890	41,000							189	189	189	180					
CN-04-S	3,720	744	40,012															
CN-05-S	N/A	N/A	N/A															
CN-06-S	1,130	226	3,890															
APE-01	2,440	488	11,830															
APE-07	2,130	426	8,940															
ASE-01	1,070	214	2,030															
EOE-01	1,860	372	3,780															
SPE-01	1,070	214	7,640															
SPE-80/85	1,380	276	3,015															
STE-10	2,220	440	21,270															

LEGEND

( ) NEW DEVELOPMENT CENTRAL
< > NEW DEVELOPMENT DEP
MAINTENANCE CENTRAL
[ ] MAINTENANCE DEP

ORIGINAL PAGE IS OF POOR QUALITY

FOLDOUT FRAME 2

											FY 89												
AST10d 30	AST10m	AST11c 30	LS2a30	LS2a30	MU-1	MU-2	MU-2	NN/D15	NN/D16a	NN/D16b	OA-1a	OA-1a	OA-1b	PHY6a30	PHY 7a	PHY 7c	SP1a	SP1b	SP1b	ST2a	ST2b	ST2e	ST2d
[146]	[146]									[146]													
682	(1550)									25													
						50	50																
														45									
		[200]																					
						[87]	[87]								522	522							
					43																		
					33																		
					82								82										
									76														
					20	20	20																
											31	31											
									24														
											90	90	90										
								53															
																	78						
								53										63	63				
											65	65											
			380	360																			
					39																		
					0															180	180	180	180
											74	74											
													0										
											23	23											
					23																		
					49																		
					43																		
					21																		
					37																		
					21																		
					28																		
					44																		

The appropriate matrix entries for payload element/mission combinations were thus identified. This permitted the identification of the first flight (new flight) and subsequent reflights for each payload element regardless of its mission assignment.[2]

A new flight/reflight software generation algorithm was applied to each chronological entry in the row for each payload element. The first flight (new flight) constituted a 100 percent development effort, for which the estimate of main memory/HOL statements in the left hand column of the matrix for that payload element was applied. For subsequent flights (reflights) a descending percentage of the original software developed for that payload element was modified for each subsequent flight. The percentages were as follows:

- first reflight - 40%
- second reflight - 30%
- third reflight - 20%
- fourth and subsequent reflights - 10%.

One final distinction was made for some of the entries of the matrix. For those payload elements or mission/payload element combinations whose computation speed requirements exceeded the effective capability of the CDMS Experiments Computer, it was assumed that those payload elements would mandatorily utilize a dedicated experiment processor (DEP) at all times. Therefore, their software requirements were coded (by brackets) as being resident in a DEP.

Data Extraction

The data contained in the Cost Data Matrix was extracted and summarized to form 39 different line items for use in the detailed cost analysis. This summarized information was consolidated and is presented as a table entitled "Summary Data Matrix" which follows this text. Immediately following is the method of derivation for each of the 39 line items of the Matrix.

---

[2] This was necessary since some missions, which were labeled as new flights, in actuality contained a payload element (or elements) which was being reflown. Thus, a lower and more realistic estimate of the software to be generated by year could be derived.

Line Item	Derivation
1.	This line item was not developed since it is specified in the Software Requirements Analysis Study report.
2.	Represents 40% of Line Item 3 which provides total first reflight software maintenance.
3.	Sum of the number of HOL statements per year of new software development required in the "Emphasis Central Overflow to Mini's" options for the Central Computer.
4.	Sum of the number of HOL statements per year of new software development for the mini computers in the "Emphasis Central Overflow to Mini's" options.
5.	Total number of statements of common library that is accumulated per year. Derived by applying the common library evolvement groundrule starting in FY81.
6.	Total number of common library HOL statements available per year. Derived by assuming Line Item 5 accumulated per year is available in the next and subsequent years.
7.	Represents the total number of HOL statements to be coded for the central computer per year in the "Emphasis Central, Overflow to Mini's" options. Derived by subtracting Line Item 6 from Line Item 3. Where Line 6 was greater than Line 3, it was assumed that 60% of Line Item 3 required development.
8.	Represents number of software modules to be compiled for the Central Computer per year. Derived by dividing Line Item 7 by 100.
9.	Represents the total number of modules to be developed per year for the overflow mini's in the "Emphasis Central" options. Derived by dividing Line Item 4 by 100.

Line Item	Derivation
10.	Represents the total number of New Development HOL Statements per year to be coded. Derived by adding Line Item 7 to Line Item 4.
11.	Represents the total number of Statements to be maintained in the Central Computer per year. Derived by summing the Mission Model Matrix numbers.
12.	Represents the total number of Statements to be maintained per year for the DEP in the "Emphasis Central Overflow to Mini's" options. Derived by summing the Mission Model Matrix numbers.
13.	Represents the total number of HOL statements to be maintained per year. Derived by adding Line Item 11 to Line Item 12.
14.	Represents the total number of modules to be compiled for the Central Computer per year. Derived by dividing Line Item 11 by 100.
15.	Represents the total number of maintenance software modules to be compiled per year for the DEP in the 'Emphasis Central Overflow to Mini's" options. Derived by dividing Line Item 12 by 100.
16.	Represents the total number of man years for new development software per year. Derived by dividing Line Item 10 by 833 (number of HOL statements per year per programmer.)
17.	Represents the total number of man years required for software maintenance. Derived by dividing Line Item 13 by 100.
18.	Represents the total number of man years for software development and maintenance per year. Derived by adding Line Item 16 to Line Item 17.
19.	Represents the total number of modules of common library available per year. Derived by dividing Line Item 6 by 100.

Line Item	Derivation
20.	Represents the total number of HOL statements to be developed in the Central Computer per year. Derived by adding Line Item 3 to Line Item 11.
21.	Represents the total number of modules to be developed in the Central Computer per year. Derived by dividing Line Item 20 by 100.
22.	Represents the total number of preflight checkout software HOL statements of new development to be coded per year. Derived by summing on a per year basis the estimated number of preflight HOL statements associated with each first flight payload element.
23.	Represents the total number of preflight checkout software maintenance HOL statements per year. Derived by summing on a per year basis the estimated number of maintenance HOL statements associated with each payload element reflight.
24.	Represents the total number of HOL statements of new development experiment simulation software. Derived by summing on a per year basis the estimated number of HOL statements of simulation software to be developed for each payload element new flight.
25.	Represents the total number of maintenance HOL statements for experiment simulation software. Derived by summing on a per year basis the estimated number of HOL maintenance experiment simulation software statements for each payload element reflight.
26.	Represents on a per year basis the number of DEP's required in the "Emphasis Central Overflow to Mini's" options. Derived according to rationale specified in Book 1, Section 7.
27.	Represents on a per year basis the number of DEP's that require maintenance due to initial flights or reflights of payload elements assigned DEP's. Derived by summing on a per year basis the number of different DEP's that fly with the assigned payload elements.

Line Item	Derivation
28.	Represents the total number of payload elements per year that have flown on multi-payload element missions. Derived by summing the number of different payload elements per year from the mission model that have flown on multi-payload element flights.
29.	Represents the total number of modules of experiment simulation software to be integrated per year in the "Centralized" or "Emphasis Central" options. Derived by multiplying Line Item 27 by 1400 statements per payload element experiment simulation size, then divided by 100 statements per module.
30.	Represents the (1) number of Remote Job Entry (RJE) stations needed, (2) number of standard RTSTS's needed, and (3) number of non-standard test sets needed per year in distributed computer options. Derived by applying groundrules defined in Book 1, Section 7.
31.	Represents the total number per year of first flights of payload elements. Derived from the mission model by summing first flight payload elements per year.
32.	Represents the total number of payload element reflights per year. Derived by summing on a per year basis the number of payload elements that are flying for a second or subsequent time.
33.	Represents the total number of PI Host computer facilities required per year in the software development option where the PI uses his own Host computer. Derivation the same as Line Item 30.
34.	Represents the total number of new standard DEP's and ..TSTS's required for procurement per year in the distributed computer concept. Derived by rationale specified in Book 1, Section 7, chart titled "DEP's Required by Payload Element."

Line Item	Derivation
35.	Represents the total number of standard DEP's/ RTSTS's to be maintained per year in the distributed computer options. Derived as specified in Book 1, Section 7, chart titled "DEP's Required By Payload Element."
36.	Represents the total number of DEP's/RTSTS's to be distributed per year in the distributed computer options. Derived as specified in Book 1, Section 7, chart titled "DEP's Required By Payload Element."
37.	Represents the total number of DEP's/RTSTS's in use per year in the Distributed Computer options. Derivation of this line item is as specified in Book 1, Section 7.
38.	Represents the total number of first flight missions per year. Derived by summing per year the first flight missions from the Mission Model.
39.	Represents the total number of refly missions per year. Derived by summing on a per year basis the refly missions defined in the mission model.

SUMMARY DATA MATRIX

COMPUTATION	YEAR 80	81	82	83	84	85	86	87	88	89	90	91
1. Total Main Memory Flight												
2. Total 40% Maintenance — 40% Line #3		5258	2755	496	1575	0	2074	1464	0	620	0	0
3. Total New Statements Dev. Central/Yr.	4940	13146	6887	1240	3937	0000	5183	3658	0000	1550	000	000
4. Total New Statements Dev. DEP/Yr.	000	1450	1395	000	000	000	000	868	868	000	000	000
5. Total Statements Common Lib. Accumulate/Yr	N/A	1315	446	45	95	000	000	000	000	000	000	000
6. Total Statements Common Lib. Available/Yr.	N/A	000	1315	1761	1806	1901	1901	1901	1901	1901	1901	1901
7. Total Statements New Dev. Coded to Central/Yr	4940	13146	5572	744	2363	0000	3377	2195	000	930	000	000
8. Total Modules New Dev. Compiled for Central/Yr.	50	132	56	8	24	0	34	22	0	10	0	0
9. Total Modules New Dev. Compiled for DEP/Yr	0	15	14	0	0	0	0	9	9	0	0	0
10. Total Statements New Dev. to be Coded (CEC + DEP)/Yr.	4940	14596	6967	744	2363	0	3377	3063	868	930	0	0
11. Total Statements to be Maintained Central/Yr.	000	3371	2889	6545	4728	7363	3689	5141	4865	5023	6198	6360
12. Total Statements to be Maintained DEP/Yr.	000	000	1554	1411	622	430	280	609	753	869	1679	869
13. Total Statements to be Maintained (CEC + DEP)Yr.	000	3371	4443	7956	5344	7793	3969	5750	5618	5892	7877	7229
14. Total Maint. Modules Compiled in Central/Yr.	000	34	29	66	48	74	37	52	49	51	62	64
15. Total Maint. Modules Compiled in DEP/Yr.	000	0	16	15	7	5	3	7	8	9	17	9
16. Total Number Man Years/New Development Coded/Yr.	5.59	17.52	8.36	0.89	2.84	0	4.05	3.68	1.04	1.12	0	0
17. Total Number Man Years Required for Maintenance/Yr.	000	4.05	5.33	9.55	6.4	9.36	4.76	6.90	6.74	7.07	9.46	8.68

SUMMARY DATA MATRIX

COMPUTATION	YEAR											
	80	81	82	83	84	85	86	87	88	89	90	91
18. Total Man Years Required (Develop. & Maint)	5.59	21.57	13.69	10.44	9.24	9.36	8.81	10.58	7.78	8.19	9.46	8.68
19. Total Number Modules Common Library Avail./Yr.	0	0	14	18	19	20	20	20	20	20	20	20
20. Total HOL Statements in Central	4940	16517	9776	7785	8665	7363	8872	8799	4865	6573	6198	6360
21. Total Number Modules in Central with Multi Payload	50	166	98	78	87	74	89	88	49	66	62	64
22. Total Number HOL Statements Preflight Checkout S/W, New Develop. (Central + DEP)/Yr.	13020	4650	13950	3720	1860	0	2790	2790	930	930	0	0
23. Total Number HOL Statements Preflight Checkout S/W, Maint, (Central + DEP)/Yr.	0	1302	558	2232	2511	4092	2790	4650	3627	4929	5022	5952
24. Total Number HOL Statements Exp. Simulation S/W, New Develop. (Central + DEP)/Yr.	19600	7000	21000	5600	2800	0	4200	4200	1400	1400	0	0
25. Total Number HOL Statements Exp. Simulation S/W, Maint. (Central + DEP)/Yr.	0	1960	840	3360	3780	6160	4200	7000	5460	7420	7560	8960
26. Total Number New DEP's Required/Yr for Central Concept	0	1	2	0	0	0	0	1	1	0	0	0
27. Total Number DEP's Maintained/Yr. for Central Concept	0	1	3	3	3	3	3	3	3	3	3	3
28. Total Number Payload Elements Flights/Yr. for Multipayload Element Missions	13	15	14	18	16	33	17	39	26	39	36	50
29. Total Number Modules EXP. Simulation Software to be Integrated per Year	182	210	196	252	224	462	238	546	364	546	504	700
30. Number of RJE's Needed Number of STD. DEP/Test Set Number of Non-STD. DEP/Test Set } Maint.	14	18	20	21	20	32	20	33	22	32	32	35
31. Total Number New Flights per Year (P/L Element Based)	14	5	12	4	2	0	3	3	1	1	0	0
32. Total Number Reflights per Year (P/L Element Based)	0	14	9	24	27	44	30	50	39	53	54	64
33. Total Number PI Host Computer Facilities Used per Year	(SAME	AS	#30)									

SUMMARY DATA MATRIX

COMPUTATION	YEAR												
	79	80	81	82	83	84	85	86	87	88	89	90	91
34. Total Number New STD DEP's/Test Sets Procured/Yr (Distributed Concept)	14	4	2	1	10	0	0	0	0	0	0	0	0
35. Total Number STD DEP's/Test Sets Maintained/Yr (Distributed Concept)	0	14	18	20	20	21	33	20	32	21	33	28	31
36. Distribution of STD DEP's/Test Sets (Distributed Concept)	14	6	24	10	11	18	23	20	21	14	7	8	-
37. Total Number STD DEP's/Test Sets in Use (Distributed Concept)	0	13	7	15	15	18	15	16	16	20	27	27	31
38. Total Number of New Mission Flts/Yr.		2	4	7	8	5	5	4	4	3	2	1	1
39. Total Number of Refly Missions/Yr.		0	2	5	9	14	16	17	20	21	22	26	28

SECTION 7 Costing Rationale

The following subsections contain the rationale and considerations associated with the costing of major procurement items, software sizing, and cost per statement/instruction, equipment maintenance, and identification of the central experiment computer functions.

7.A Minicomputers

Mini Selection

One Mini/Payload Element per Mission except:

a. Where multiple elements make up an experiment, fewer mini's will be used until workload is satisfied.

b. Where requirements exceed capacity, multiple mini's will be selected.

c. Where selection of a payload element to receive a mini reduces the total mini's due to uses on multiple missions that require mini's, then that payload element will be allocated a mini even though the software requirements may be lower than another payload element on a given mission.

- Define for typical mini/micro computer in 1978 - 1980 time frame.

  Power, weight, volume. Include input/output system equivalent to rau characteristics as proposed by EF13. Include at least 32K main memory.

  Qualification of unit to operate in (1) Shuttle PSS, (2) Spacelab Pressurized Module, (3) Spacelab Igloo, and (4) Spacelab Pallet.

  Cost per system - single and quantity buys.

  Add on cost for additional memory.

  Assume at least 350 KOPS (Eq adds) required.

  Reliability Assessment (Gross).

  What is most logical choice of flight mass memory device? Random access, read/write, high speed, cheap, large capacity, etc. Define power, weight, volume, cost, etc.

  Cost etc. for test set for ground use in testing, loading, etc.

- During Spacelab lifetime (1980 - 1991) will technology advances radically change characteristics of computer and mass storage? If so, project costs, etc., as stated above.

C.2

COST SUMMARY

	UNIT COST	QUAL. COST
CENTRAL OPTION		
Standard Mini	$43K	$285.3K
Standard I/O	8K	235.0K
	$51K	$520.3K
DISTRIBUTED OPTION		
Standard Mini	$38K	$285.3K
Standard I/O	8K	235.0K
	$46K	$520.3K
CENTRAL OPTION		
Non Standard Mini	$43K	$285.3K
Non Standard I/O	8K	235.0K
	$51K	$520.3K
DISTRIBUTED OPTION		
Non Standard Mini	$43K	$285.3K
Non Standard I/O	8K	235.0K
	$51K	$520.3K

Per 16K Memory Module (MOD to CII) - $30K

MASS STORAGE - NO BID - NO COSTS DEVELOPED

COMMERCIAL MINI (MMI)(MIL SPEC 883)

32K 16 Bits No I/O

NON-RECURRING COSTS

	(K$)
Parts (Cards, P.S., etc.)	74
Analysis	25
Packaging Design	140
Fab. Qual. Unit	18
Test Equipment	15
Qual. Test	115
	$387K

RECURRING COST (Quantity 1-100)

Cards	$28,875
Power Supply	5,500
Packaging	15,000
	$49,375

PROGRAM COST (30 Units)

Non-Recurring	387.00K
Recurring	1,481.25K
	1,868.25K

SUMC II

32K 16 Bits

NON-RECURRING COSTS*	(K$)	If Parts Screening
Engineer Costs	127.3	↓
Fabricate Unit	45.0	40K
Qual. Test	113.0	
	285.3K	

NON-RECURRING

Quantity		
1-10	43K	3K/Unit
30-40	38K	

PROGRAM COST

30 X 38K	1,140K

* Low Cost Systems Office is planning to fund this effort.

SOME GENERAL CHARACTERISTICS

	SUMC	COMM. MINI
Weight	13.8 lbs.	30 lbs.
Power	109 Watts	297 Watts
Add Time	2.2 μs	2.1 μs
Mult. Time	7.8 μs	8.8 μs
Floating Point	Yes	No
Double Precision Arith.	Yes	No

CASE I (STANDARD UNIT)

(I/O Unit Flexibility Equivalent to DIU)

Non-Recurring

Design	378K	378K
Quality	120	120
	498K	498K
Recurring		
30 Units @ 44.8K	1344	2016 (45 Units @ 44.8K)
	1842K	2514K

CASE II (Experimenter Includes I/O in his Assembly(s))

Assumption: 1/2 of Experiments are SPAMAC Type
Basic Circuitry Designs Provided to Experimenter.

Non-SPAMAC (15 Experiments)

Non-Recurring Design		36K		36K
Recurring @ 72K	(72K X 15)	1080K	(72K X 22)	1584

SPAMAC (15 Experiments)

Non-Recurring Design		34K		34K
Recurring @ 15K	(15K X 15)	225K	(15K X 23)	345K
		1,375K		1,999K

CASE III (All Exp's Use SPAMAC)

Non-Recurring		34K		34K
Recurring	(15 X 15K)	450K	(45 X 15K)	675K
		484K		709K

CASE IV (All SPAMAC) (Provide Standard CAMAC Interface to P.I.)

		No Mini		Mini
Non-Recurring		235K		235K
Recurring	45 X 10K	450K	30 X 18K	540K
		685K		775K

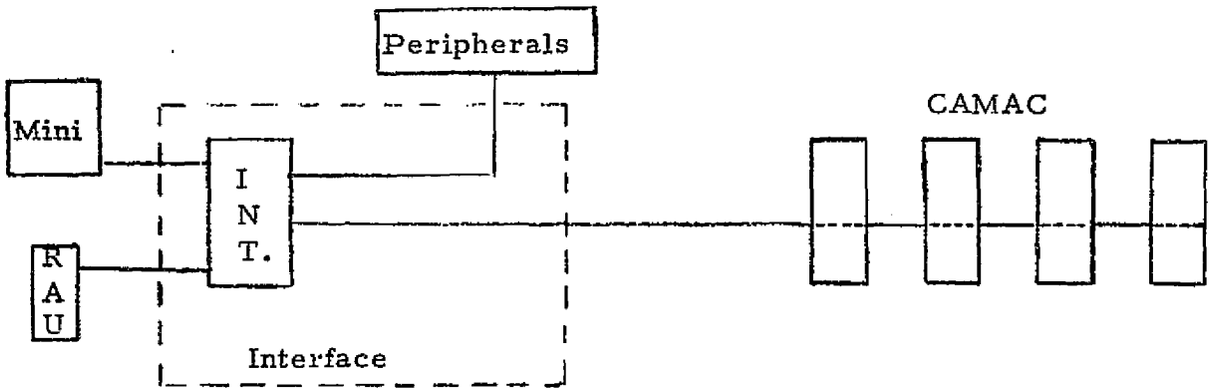

MICRO/MINI COMPUTER FOR 1978 - 1980

	System	Power	Weight	Volume
Intel 8080	8 bit + 32K + I/O	50W	12#	$.36F^3$
TI 990/LSI 11 (DEC)	16 bit + 32K + I/O	87W	13#	$.46F^3$

- Assume non operating launch and tolerate intermittents in zero G from contaminants. Board and large component must be clamped down. Outgassing and flammability would have to be assessed.

- If Screened Parts 50 → 75% higher to MIL 883

COST		8 Bit	16 Bit
# Chips			
58	CPU + MISC	$1000	$1000
140	Memory 32K	2400	5000
190	I/O	5000	5000
10	PS	600	600
		$9000	$11600

- Cost Add On Memory

  $975/16K $625/4K

- Speed 2 μs Add (Mem. → Reg.) 2.3 μs MUL/DIV

- LSI Chips Very Reliable - Interconnection Account for Unreliability.

- Flight Mass Memory Device

  (Fairchild Intel) CCD Memories of Block Organization
  Cost 0.1¢/Bit
  Power 16μw/Bit 3MHZ 2μw/Bit 50KHZ Standby
  Access .5 ms
  Package 18 pin dip 9216 Bits 1K X 9

  (10^6 Bits Memory) 20 Watts/7#/$.2F^3$/$3000.00
  (≈ 6 Watts Standby)
  (Includes 4 watts drivers, etc.)

- Test Equipment Set - Panel plus Loader $5000.00

- Density of LSI chips will increase reducing number of chips required, but system size is dependent on I/O pins.

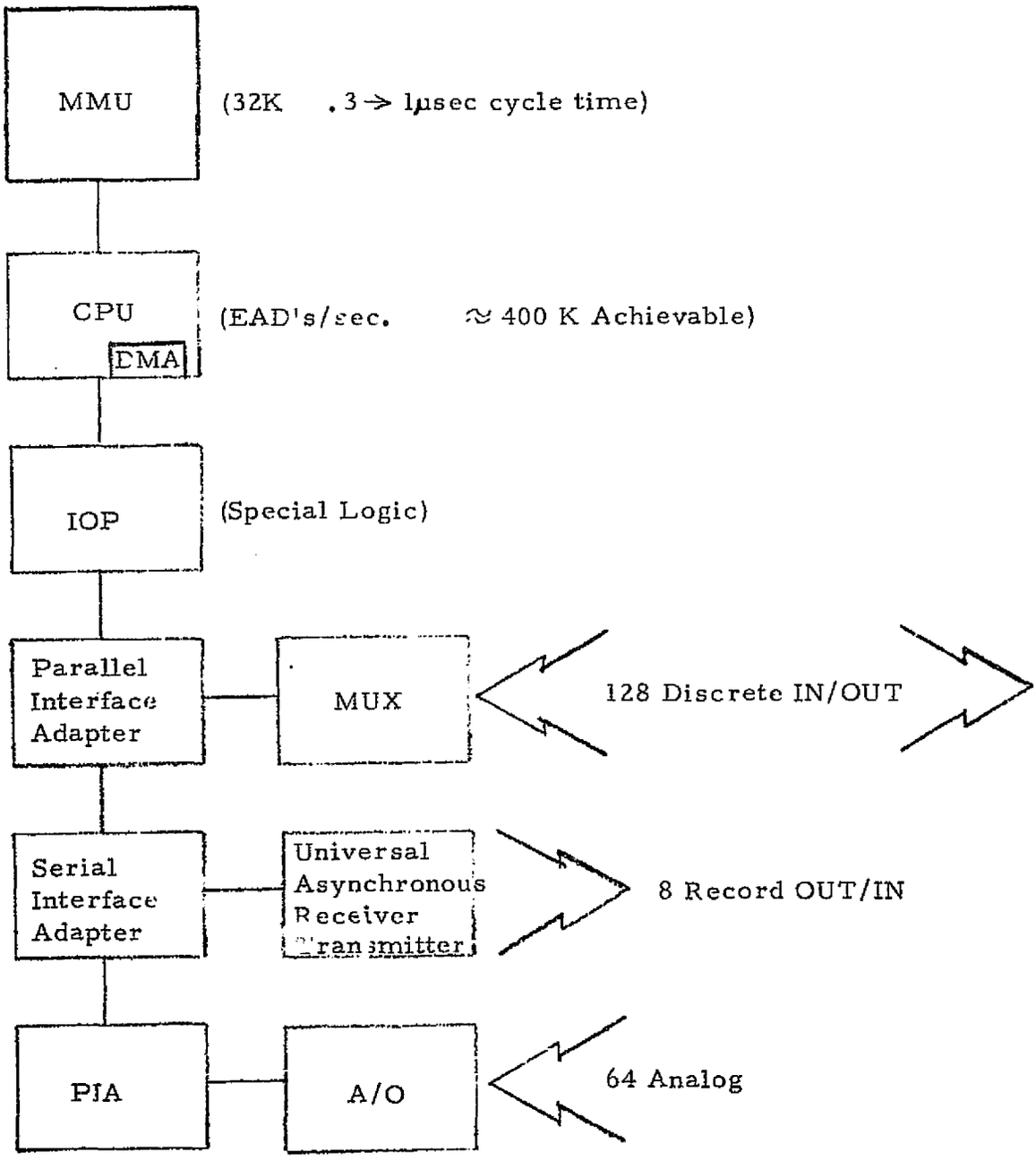
MMU
(32K .3 → 1μsec cycle time)
CPU
DMA
(EAD's/sec. ≈ 400 K Achievable)
IOP
(Special Logic)
Parallel Interface Adapter
MUX
128 Discrete IN/OUT
Serial Interface Adapter
Universal Asynchronous Receiver Transmitter
8 Record OUT/IN
PIA
A/O
64 Analog

National Aeronautics and
Space Administration

George C. Marshall Space Flight Center
Marshall Space Flight Center, Alabama
35812

NASA

EXHIBIT A

Reply to Attention of EC41

March 8, 1976

TO: EF11/Mr. Hamby

FROM: EC41/Mr. Garrett

SUBJECT: Assessment of Off-the-Shelf Mini Computer for Spacelab Use

The following considerations are necessary when assessing the use of a so called "off-the-shelf" Mini Computer for Spacelab application. From these considerations one can estimate the necessary design changes/modifications, qualification testing and analyses which must be performed in order to meet the minimum requirements of a particular application such as Spacelab.

a. Minimum Acceptable Reliability

   1. MTBF

b. Minimum Acceptable Quality

c. Maintainability

   1. Repairability
   2. Diagnostic Software
   3. Test/Checkout Equipment
   4. Documentation
   5. Etc.

d. Configuration Control

   1. Configuration
   2. Change Control
   3. Traceability
   4. Etc.

e. Safety

1. Flammability
2. Explosive Proofing
3. Fail Safe
4. Etc.

f. Operational/Performance Philosophy

1. Fault Tolerance
2. Intermittent Operation
3. Failure Definition
4. Etc.

g. Failure Isolation and Repair Philosophy

1. Onboard Isolation and Repair
2. Level of Repair Onboard
   (a). Part
   (b). Subassembly
   (c). Component

h. Method of Thermal Conditioning

1. Forced Convection
2. Conductive
3. Radiation
4. Etc.

Application criteria can be established from the above against which the Mini Computers can be assessed to determine acceptability or the modifications necessary to make them acceptable for the application.

The major effort is to "qualify" the Mini Computer for the application. Qualification consists of both analyses and testing. It is important to note that the design as well as the physical implementation of that design must be qualified. Depending upon the stringency of the applications, requirements the qualification effort could be quite large or reasonably small.

To determine the extent of the qualification effort it is necessary to review the Mini Computers relative to the manufacturer's design requirements and tests. In addition the usage history of the "Mini's" must be compiled

for the various applications. Data relating to user tests should be obtained.

The following is an outline of the activity necessary to qualify a "Mini" for a particular application.

I. ANALYSES

A. Design Review (Top Level).

1. Packaging Construction
2. Circuit/Logic/Interfaces
3. Useful Life

B. Parts, Materials and Processes Review

1. Contamination
2. Flammability
3. Outgassing
4. Zero G
5. Cleanliness

C. Documentation Review

1. Specifications (Top Level)
2. Procedures (Top Level)
3. Drawings (Top Level)

D. Bonding and Lightning Protection

E. Mass and Center of Gravity

II. SPECIAL FIXTURES AND TEST EQUIPMENT

A. Vibration Fixture

B. Breakout Boxes

C. Special Cables

D. Etc.

III. TESTS

A. Performance

1. Functional
2. Detailed Measurements
3. Life

B. Environmental

1. Vibration

   (a). Sine
   (b). Random

2. Acoustic
3. Shock

   (a). Non-Operational
   (b). Operational
   (c). Crash Safety

4. Temperature

   (a). Non-Operational
   (b). Operational

5. Vacuum/Altitude
6. Outgassing
7. Electromagnetic Interference

   (a). Radiated
   (b). Conducted

It should be noted that when the Spacelab environments are compared to the conditions to which the Mini's have already been subjected in their present applications, it may be possible to reduce the amount of testing necessary to qualify the Mini for the Spacelab application by similarity.

A rough order of magnitude (ROM) estimate of the effort required to qualify a Mini Computer for the Spacelab application is provided below. It should be noted that certain assumptions are included in the estimate as follows:

a. The design and technology used in the Mini Computers are qualifiable.

b. Failure free operation is required to successfully complete a test.

c. Adequate test equipment, fixtures and diagnostic software exist.

d. Capability and provisions for repair exist.

e. Previous analyses have been conducted and required modifications (if any) incorporated.

f. Failures are isolated and repaired.

ESTIMATE TO PERFORM QUALIFICATION

ANALYSES ..... 2 MM

1. Design
2. Parts, Materials and Processes
3. Documentation
4. Mass and Center of Gravity
5. Bonding, Grounding, Lightning
6. Documentation Review

SPECIAL FIXTURES AND TEST EQUIPMENT .....8 MM

1. Vibration Fixture
2. Breakout Boxes
3. Special Cables, Etc.

ENVIRONMENTAL TESTS ..... 20 MM

1. Vibration
2. Temperature
3. Altitude/Vacuum
4. Shock
5. Acoustic
6. Outgassing
7. EMI

TOTAL 30 MM

QUALIFICATION PLAN

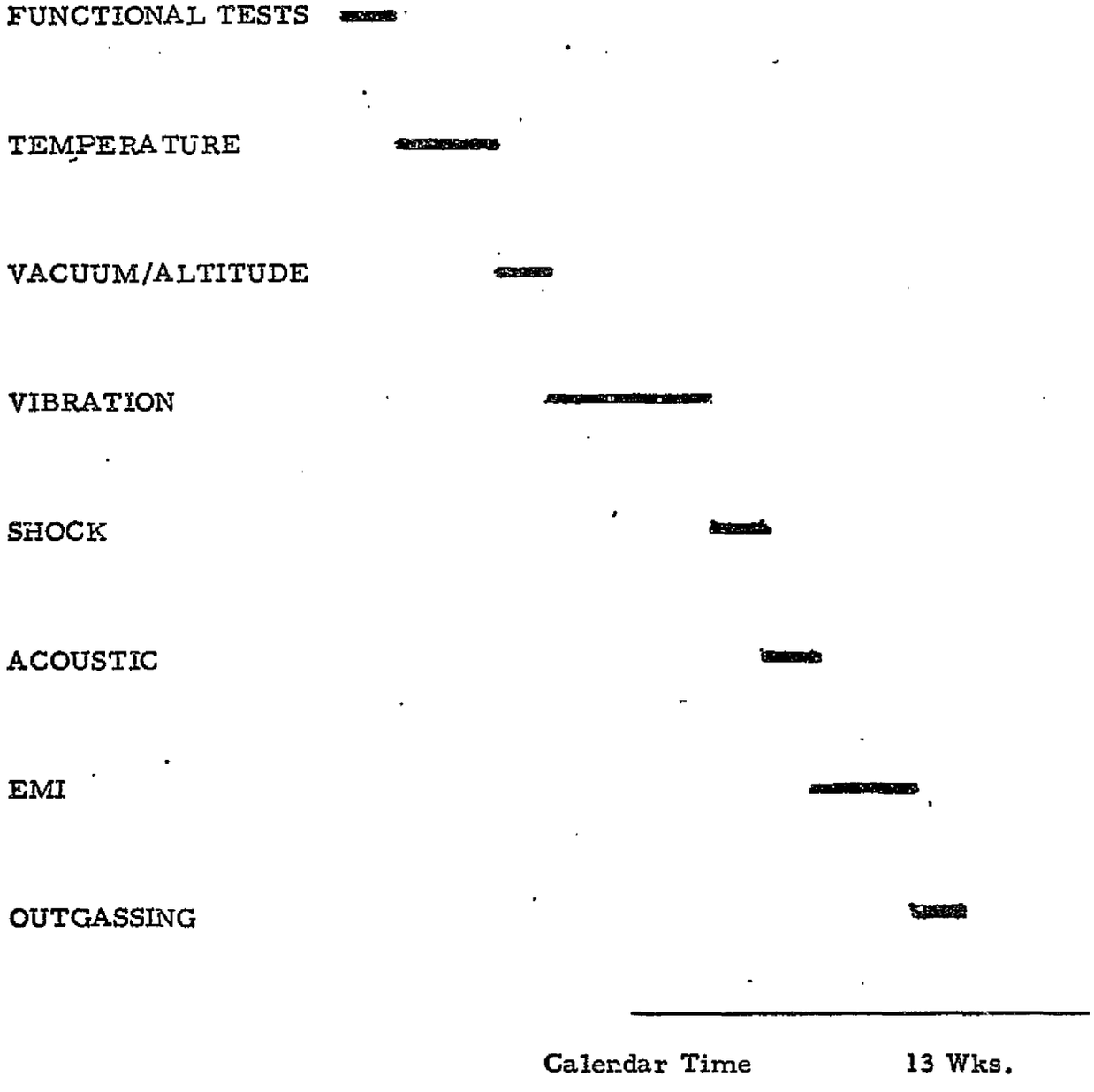

POTENTIAL PROBLEM AREAS

Based on a cursory scan of the Spacelab requirements the potential problem areas appear to be:

1. Parts and Materials
2. Package for Thermal Dissipation (Pallet)
3. Random Vibration (Pallet)
4. Crash Safety Shock
5. EMI
6. Cleanliness

If modifications are required to make the Mini's meet the requirements, one should consider making those modifications external to the Mini as opposed to changing the Mini. The manufacturers are not going to be receptive to modifying a Mini for one application and furthermore the cost advantages are diminished if this is the case. In other words, provide an acceptable environment for the Mini in Spacelab.

SUMMARY ESTIMATE

Cost:	$60,000 to $150,000
Schedule:	10 weeks to 16 weeks

These estimates are highly dependent upon the test philosophy and the amount of testing performed. The higher figure represents the full test sequence with failure-free operation as a criteria for successful completion. If one decides that intermittent operation is acceptable, because of the nature and criticality of the application and reload capability exists, then the effort to qualify is reduced substantially and representative of the lower figure.

The following actions/modifications may be necessary in order to satisfactorily apply a Mini in the various locations,within Spacelab.

1. Procure with screened parts
2. Provide shock mounting
3. Procure with conductive and radiation cooling capability
4. Procure with conformal coating
5. Relax the EMI requirements
6. Add card and wiring supports
7. Procure with vacuum proofed fan motor.

The enclosed vu-graphs can be used as backup for Mr. Powell's presentation.

Paul, as you are aware I only had one day to review and prepare the above information. I normally require a much more thorough approach to an exercise of this type. There are data missing, as I have indicated, which should be compiled to support the assessment.

I hope this information will assist you in your study effort.

Harrison Garrett
Chief, Electronics
Development Division

Enclosure

cc:
EF11/Mr. Lewis

ORGANIZATION:	MARSHALL SPACE FLIGHT CENTER	NAME:
		DATE:

- ASSUMPTIONS
  - DESIGN AND TECHNOLOGY ARE QUALIFIABLE
  - FAILURE FREE OPERATION REQUIRED
  - ADEQUATE TEST EQUIPMENT EXISTS
  - ADEQUATE DIAGNOSTIC SOFTWARE EXISTS
  - CAPABILITY AND PROVISIONS FOR REPAIR EXIST
  - ALL FAILURES ARE ISOLATED AND REPAIRED

FILE NO.

ORGANIZATION:	MARSHALL SPACE FLIGHT CENTER	NAME:
		DATE:

- CONTENTS OF QUALIFICATION PROGRAM
  - ANALYSES
  - SPECIAL FIXTURES & TEST EQUIPMENT
  - ENVIRONMENTAL TESTS
    - VIBRATION
    - TEMPERATURE
    - ALTITUDE/VACUUM
    - SHOCK
    - ACOUSTIC
    - EMI
    - OUTGASSING

MSFC - Form 3304 (Rev October 1972)

FILE NO.

ORGANIZATION:	MARSHALL SPACE FLIGHT CENTER	NAME:
		DATE:

o POTENTIAL PROBLEM AREAS

--PARTS AND MATERIALS CONTAMINATION

-- THERMAL DISSIPATION (PALLET OPERATION)

--RANDOM VIBRATION (PALLET OPERATION)

--CRASH SAFETY SHOCK

--ELECTROMAGNETIC INTERFERENCE

--CLEANLINESS

--WIRE AND CARD SUPPORT

--ROTATING PARTS (FAN MOTOR)

--LIGHT BULBS

MSFC - Form 3308 (Rev October 1972)

FILE NO.

ORGANIZATION:	MARSHALL SPACE FLIGHT CENTER	NAME:
		DATE:

- POTENTIAL MODIFICATIONS
  - PROCURE WITH SCREENED PARTS
  - PROCURE WITH CONDUCTIVE AND RADIATION COOLING CAPABILITY
  - PROCURE WITH CONFORMAL COATING
  - PROVIDE SHOCK MOUNTING
  - RELAX EMI REQUIREMENT
  - PROCURE WITH VACUUM PROOFED FAN MOTOR
  - ADD CARD AND WIRING SUPPORTS

MSFC - Form 3304 (Rev October 1972)

FILE NO.

March 10, 1976

EXHIBIT B

SPACELAB ENVIRONMENTAL SPECS.

A. SPACELAB THERMAL CONTROL CAPABILITIES

The Space Lab environmental control subsystem is designed to transfer up to 8.5 kw of heat to the orbiter and to accommodate heat peaks of 12.4 kw for 15 minutes every three hours. It can accommodate the allowed 7 kw average and 12 kw peak power consumption of Space Lab and its experiments.

The total ECS heat removal capability available for Space Lab experiments and mission-dependent Space Lab subsystem equipment is given below.

Table 4 – 7 Spacelab Thermal Control Budget

Configuration	Basic Spacelab	Experiment & Mission Dependent Subsystem Equipment					
		Module				Pallet	Total Available
		Cabin Loop	Avionics Loop	Exp.HX	Total Module		
max.nominal Module/Pallet	TBD	1 kw	3 kw	4 kw	TBD	4.85 kw	TBD
Peak		TBD	TBD	TBD	TBD	TBD	
max.nominal Module-Only	TBD	1 kw	3 kw	4 kw	TBD	-	TBD
Peak		TBD	TBD	TBD	TBD		
max.nominal Pallet-Only	TBD	-	-	-	-	6.5 kw	TBD
Peak							

The thermal control capabilities are summarized below:

Table 4 - 8 Thermal Control Capabilities Summary

Parameter	Capability
Cabin Air Cooling	1 kw max. 291 - 300 K (18 - 27° C)
Rack Air Cooling	3 kw max. 295 - 313 K (22 - 40° C) TBD kw peak in module-only mode (22 - 50° C)
Experiment Heat Exchanger	4 kw max. TBD temperature range TBD kw peak in module-only mode
Cold Plate	1 kw max. 297 - 313 K (24 - 40° C) in module/pallet mode 283 - 305 K (10 - 32° C) in pallet-only mode
Thermal Capacitor	TBD

B. SPACE LAB MODULE EQUIPMENT/FLIGHT ENVIRONMENT

1. Vibration

a. Sine - Frequency range 5 to 35 Hz. at an acceleration comp of ± 0.25 g peak.

b. Random (6 sec. only)

Table 5 – 1: Random Vibration Level for Rack Mounted Module Equipment

Location	Frequency	Level
Rack mounted equipment	20 – 200	+ 8 dB/oct
	200 – 700	0.1 g^2/Hz
	700 – 900	– 18 dB/oct
	900 – 2000	0.02 g^2/Hz
	composition	10 g rms

5 – 1

c. Acoustic

The Spacelab module shell and insulation will attenuate the acoustic vibration by approximately 7 dB over-overall, the attenuation being frequency dependent. Hence equipment mounted anywhere in the module will be subjected to acoustic spectra given in Figure 5-3, varying in time from launch in a similar manner as shown in Figure 5-2.

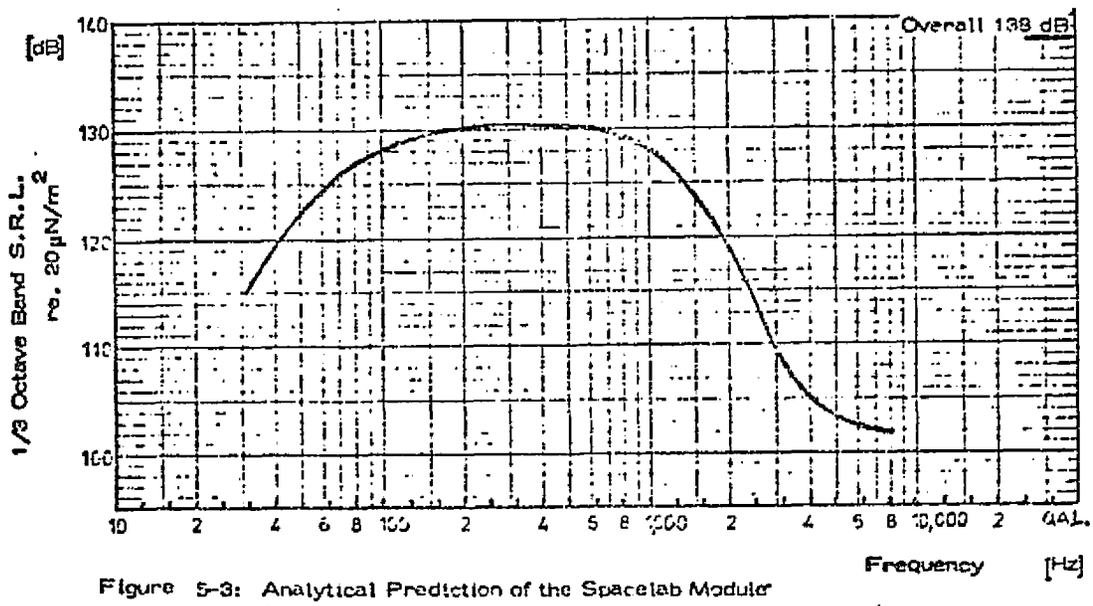

Figure 5-3: Analytical Prediction of the Spacelab Module Internal Acoustic Spectrum

ORIGINAL PAGE IS OF POOR QUALITY

2. Shock

a. Landing

Table 5-2: Landing Shock

Acceleration (g Peak)	Duration (Milliseconds)
0.23	170
0.28	280
0.35	330
0.43	360
0.56	350
0.72	320
1.50	260

b. Shock Safety Crash

Equipment design goal 40 g $\pm$ 6 g sawtooth for 11 m sec. (Equipment should not break loose).

c. On - Orbit

Equipment mounted within reasonable access of a "kick" or "push off" load must be capable of operating normally after such an event.

3. Temperature

Cabin air tempt 18° C - 27°C. $\pm$ 1 °C.

4. Pressure

Cabin 1.013 ±0.013 bar.

5. Humidity

25% - 70%

6. Radiated Emissions

Spacelab equipment tested in RF field of at least 1 V/M over 14 K Hz. to 10 G Hz.

Space Lab generated conducted interference level limits:

1.5 v RMS - 30 Hz. - 3 K Hz.
1.5 v PP 3 K Hz. - 100 Hz.
Power bus on + 28 v, 50 μsec.
Current rise/fall $<$ 5 amp/μsec.

C. Space Lab Pallet

1. Vib - TBD - Interium same as module.
± 0.25 g peak 5 - 35 Hz.

a. Random

Table 5 - 7 Random Vibration Levels for Pallet Panel Mounted Equipment

Location	Frequency	Level
Pallet panel mounted equipment mass < 15 kg	20 - 200 Hz	+ 8 dB/oct
	200 - 700 Hz	0.72 g^2/Hz
	700 - 900 Hz	- 18 dB/oct
	900 - 2000 Hz	0.166 g^2/Hz
	Composite	26.4 g RMS
Pallet panel mounted equipment mass > 15 kg	20 - 200 Hz	+ 8 dB/oct
	200 - 700 Hz	0.15 g^2/Hz
	700 - 900 Hz	- 18 dB/oct
	900 - 2000 Hz	0.035 g^2/Hz
	Composite	12 g RMS

Table 5 - 8 Random Vibration Level for Pallet Hardpoint Mounted Equipment

Location	Frequency	Level
Pallet hardpoint mounted equipment mass = 1000 kg	20 - 200 Hz	+ 8 dB/oct
	200 - 700 Hz	0.048 g^2/Hz
	700 - 900 Hz	- 18 dB/oct
	900 - 2000 Hz	0.011 g^2/Hz
	composite	6.8 g RMS

ORIGINAL PAGE IS
OF POOR QUALITY

b. Acoustic

Same as module.

2. Shock

a. Landing

Same as module.

b. Crash Safety Shock

Same as module

3. Temp (Conduction)

TBD

Space Thermal Environment Shown below:

Table 5-10 Space Thermal Environment

Environmental Parameter	Unit	Maximum	Nominal	Minimum
Solar Radiation	W/m^2 ($Btu/hr\text{-}ft^2$)	1440.5 (457)	1352.2 (429)	1264.0 (401)
Earth Global Albedo	Percent (%) of Solar Radiation	42	30	18
Earth Thermal Radiation	W/m^2 ($Btu/hr\text{-}ft^2$)	278.6 (88.4)	236.4 (75.0)	194.2 (61.6)
Space Sink Temperature	^{o}K	-	2.7 K	-

4. Radiation

(1) galactic cosmic radiation

(2) geomagnetically trapped radiation

(3) solar flare particle flow

(JSC 07700, vol. XIV, Par 4.1.2.3 flux models).

5. Meteoroids

Mass - $1 - 10^{-12}$ gms cometary
$1 - 10^{-6}$ gms stream

avg total environment

Particle Density	0.5 g/cm^3
Particle Velocity	20 km/sec

Flux Mass Models

(1) For $10^{-6} \leq m \leq 10^{0}$ $\log Nt = -14.37 - 1.213 \log m$

(2) For $10^{-12} \leq m \leq 10^{-6}$ $\log Nt = -14.339 - 1.584 \log m - 0.063 (\log m)^2$

Nt – no. particles/m^2/sec of mass m or greater

m = mass in grams

Defocussing factor for earth, and if applicable, shielding factor are to be applied.

EL1894

ORGANIZATION	MARSHALL SPACE FLIGHT CENTER	NAME
EL32	SPACELAB AVIONICS	TANNER/BEASLEY
		DATE MARCH 1976

7.0 - 3.399 =
3.601 KW

SPACELAB AVERAGE POWER CONSUMPTION

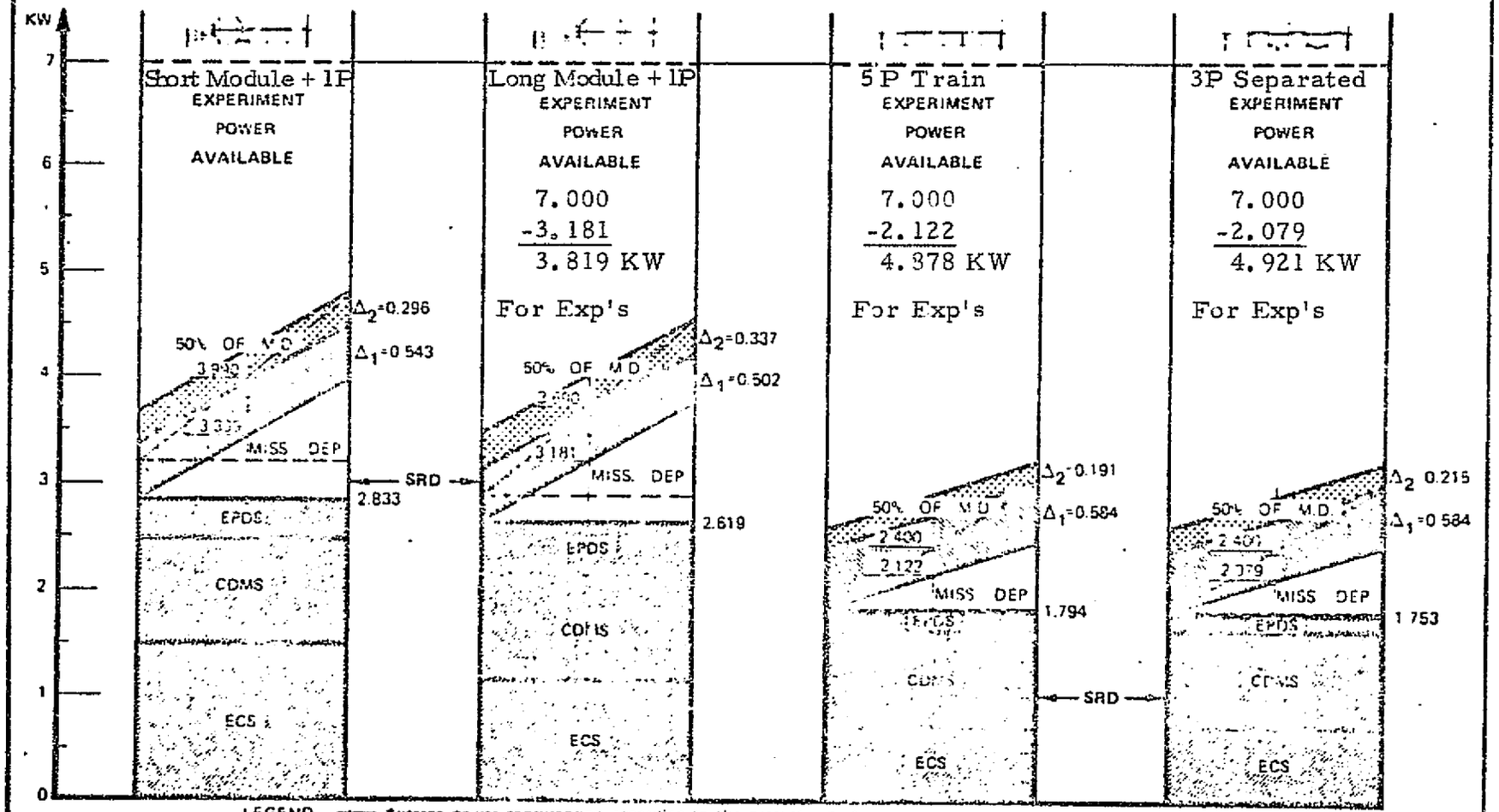

LEGEND —— Average power consumption according to the present report

- - -

Basic Spacelab equipment

In-scope potential changes (Δ_1)

Out-of-scope potential changes (Δ_2)

ORIGINAL PAGE IS OF POOR QUALITY

DERIVATION OF QUANTITY OF DEP's REQUIRED

CALENDAR YEAR	79	80	81	82	83	84	85	86	87	88	89	90	91	Total Flights	# of Exp. /Payl.	Accommodations
AS-01-S		+1	1	-1		+1	-1							3	6	P/G
03				+1	-1	+1	-1					+1	1	3	4	P/O
04		+1	1	1	1	1	-11	+1	111	1	111	11	111	18	4	P/G
05				+1	-1									1	1	P/O
07							+1	-1						1	--	----
09							+1	-1						1	--	----
10								+1	-1			+1	-1	2	--	----
15					+1	1	-1		+1	1	1	-1		5	--	----
18										+1	-1			1	--	----
19				+1	-1	+1	-1	+1	-11	+1	-1	+1	-1	6	--	----
20								+1	-1		+1	1	1	3	--	----
HE-11-S			+1		1	1111	1	11	1111	11111	11	1111	1111	30	2	P/G
12	+1	-1	+1		1	1	1	-1						5	--	----
13			+1		1	1	1	-1						4	--	----
16				+1	-1	+1	-1	+1	1	-1	+1	1	1	6	--	----
18							+1	1	1	1	1	1	1	6	--	----
SO-11-S									+1	11	1	11	1	6	9	P/O
12			+1		1	11	11	1	-11					8	--	----
15								+1	-1					1	11	P/O
17			+1	1	11	1	1	11	11	111	11	11	11	18	4	P/O
AP-06-S		+1	1	1	11	11	11	11	11	1	1	11	1	17	8	LP
09	+1	1	-1			+1	-1	+1	-1	+1	1	1	1	7	3	LP
13	+1	1	-1			+1	-1	+1	-1	+1	1	1	1	7	--	----
EO-01-S	+1	1	-1		+1	-1	+1	-11	+1	+1	11	11	11	13	20	L
06			+1	1	1	11	1	11	1	11	1	11	11	15	1	P/O
19	+1	1	1	1	11	1	11	11	111	111	111	111	111	25	1	LP
20			+1	-1	+1	-1	+1	1	1	1	11	1	11	10	1	LP

DERIVATION OF QUANTITY OF DEP's REQUIRED

CALENDAR YEAR	79	80	81	82	83	84	85	86	87	88	89	90	91	Total Flights	# of Exp./Payl.	Accommodations
OP-02-S			+1	1	1	11	1	11	1	11	1	11	11	15	2	LP
03			+1	1	1	1	1	11	11	11	111	111	1111	19	1	LP
SP-13-S					+1	1	1	1	1	1	-1	+1	-1	7	--	----
14			+1		1	1	1	1	1	1	1	1	1	10	45	LP
15			+1		1	1	11	11	11	11	11	111	111	20	12	P/O
31			+1	-1	+1	-1	±1	-1	+1	-1	-1	+1	1	6	6	L
LS-09-S		+1	11	11	11	11	11	11	11	11	11	11	11	22	4	L
13	+1	1	-1			+1	-1	+1	-1	+1	1	1	1	7	4	L
ST-31-S														7	5	L
58		+1	1	1	11	111	111	111	1111	1111	1111	11111	11111	35	--	----
CN-04-S			+1	-1	+1	-1	+1	1	1	1	11	1	11	10	9	LP
05														9	5	LP
08	+1	1	1	-1	+1	1	1	1	11	1	111	11	111	17	2	P/O
APF-01	+1	1	-1			+1	-1	+1	-1	+1	1	1	1	7	--	----
07	+1	1	-1			+1	-1	+1	-1	+1	1	1	1	7	--	----
ASE-01	+1	1	-1			+1	-1	+1	-1	+1	1	1	1	7	--	----
EOE-01	+1	1	-1			+1	-1	+1	-1	+1	1	1	1	7	--	----
SPE-01	+1	1	-1			+1	-1	+1	-1	+1	1	1	1	7	--	----
80/85	+1	1	-1			+1	-1	+1	-1	+1	1	1	1	7	--	----
STE-10	+1	1	-1			+1	-1	+1	-1	+1	1	1	1	7	--	----

DERIVATION OF QUANTITY OF DEP's REQUIRED

CALENDAR YEAR	79	80	81	82	83	84	85	86	87	88	89	90	91	Total Flights	# of Exp. / Payl.	Accommodations
Total Payloads	0	14	19	21	29	29	43	31	51	38	51	53	60	455		
Total Unique	0	14	18	20	20	21	33	20	33	21	33	31	35	297	Req. Proc. Support	
Releasing	0	1	11	5	5	3	19	4	15	1	4	1	All			
In Use	o	13	7	15	15	18	14	16	18	20	29	30	35	30 is Absolute Minimum		
Starting Up	14	5	13	5	6	15	6	17	3	13	2	5	0	104	45 New Start	
Max. Req.	14	18	20	20	21	33	33	33	33	33	33	34	35			
Delay Starts	0	0	0	0	0	3	0	3	0	3	0	5	---	15	By Analysis	
Procured DEP's	14	4	2	1	10	0	0	0	0	0	0	0	0	31		
Cumulative Total	14	18	20	21	31	31	31	31	31	31	31	31	31	31		

L = Lab
P = Pallet
O = Experiment Operated from Spacelab on Orbit
G = Experiment Operated from Ground

+1 Means Starting Up - Does Not Fly in That Year
-1 Flys and is Released That Year
1 DEP Retained by PI for Entire Year (In Use)
(Released Can Only Be Used For Starting Up)

Total Payloads = (Those That Fly and are Released (-1)) + (Those Retained by PI (1)) (-1) + (1) (Includes Payload Elements With no Computer Req. (ST 31, CN05)

Total Unique = (In use) + (Releasing) (Multiple Flight of One Payload Element in Same Year Count as one).

Releasing = Those That Fly and are Released (-1)

In Use = DEP Retained by PI for Entire Year (1)

Starting Up = Starting Up But Not Flying That Year (+1)

Max. Required = (Starting UP) - (Releasing) or (Total Unique)

Delay Starts = Developed by Analysis of Release and Start Up Phasing

Procured DEP's = Delivered Quantity by Year

Cumulative Total = DEP's Available Each Yr.

Total DEP's = 31 (30 is Maximum Required + 1 Added to Ease Distribution)

DEP Deliveries = Maximum Required Until 1982 then equals total Payloads Until Procurement is Complete

7.B CID and RTSTS

The Computer Interface Device (CID) is a minicomputer which provides real time simulation capability, and the standard and specially designed hardware interface components used to communicate with and control the Spacelab CDMS or a Dedicated Experiment Processor (DEP) for the purpose of development and test of flight software.

The Real Time Simulation Test Set (RTSTS) is a subset of the CID which can be used by a PI to develop and test his Experiment Application Software for a DEP at his own facility.

CID cost is supplied in the costing method sheets for the baseline software development option, IA1.

CID

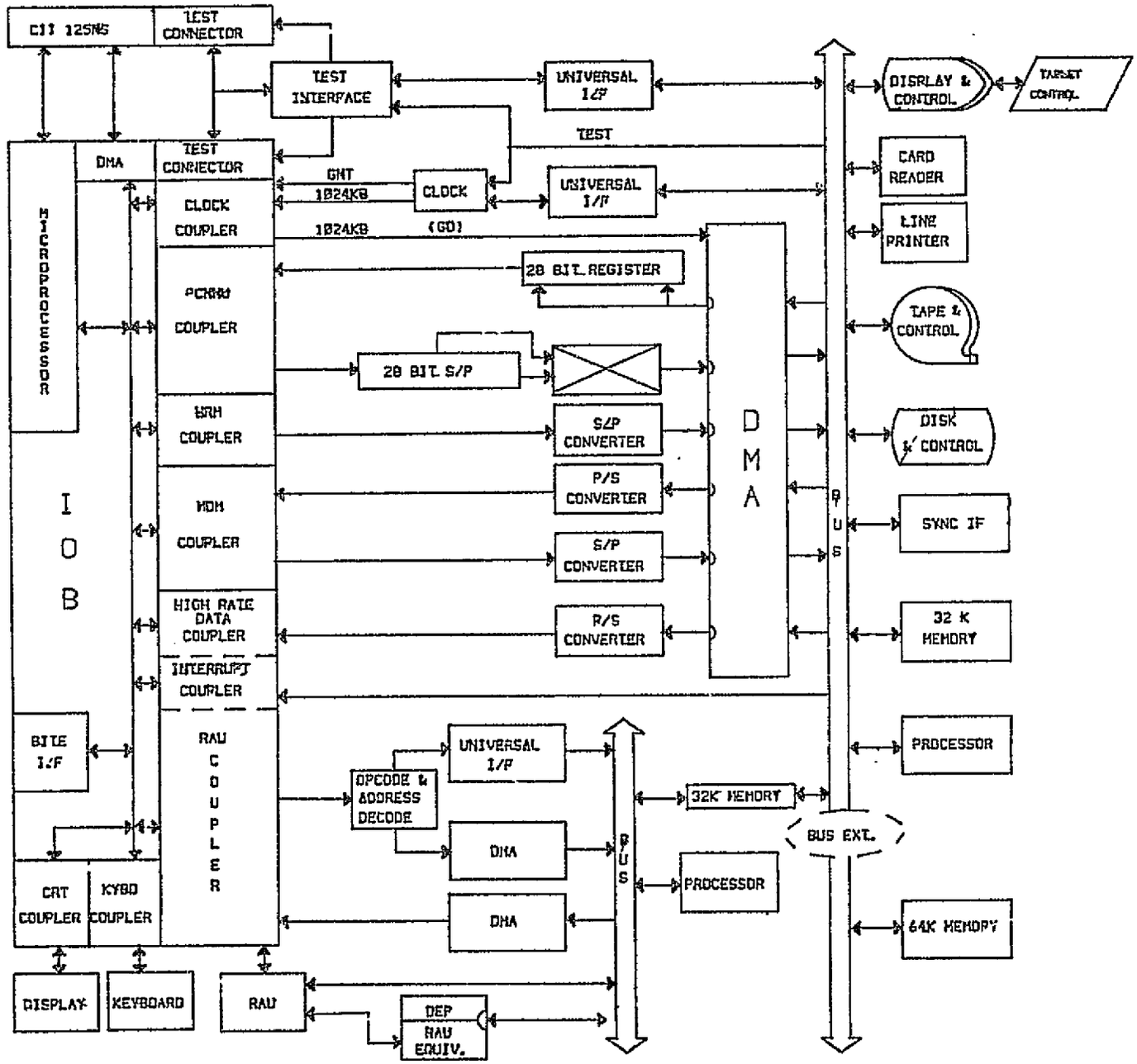

ORIGINAL PAGE IS OF POOR QUALITY

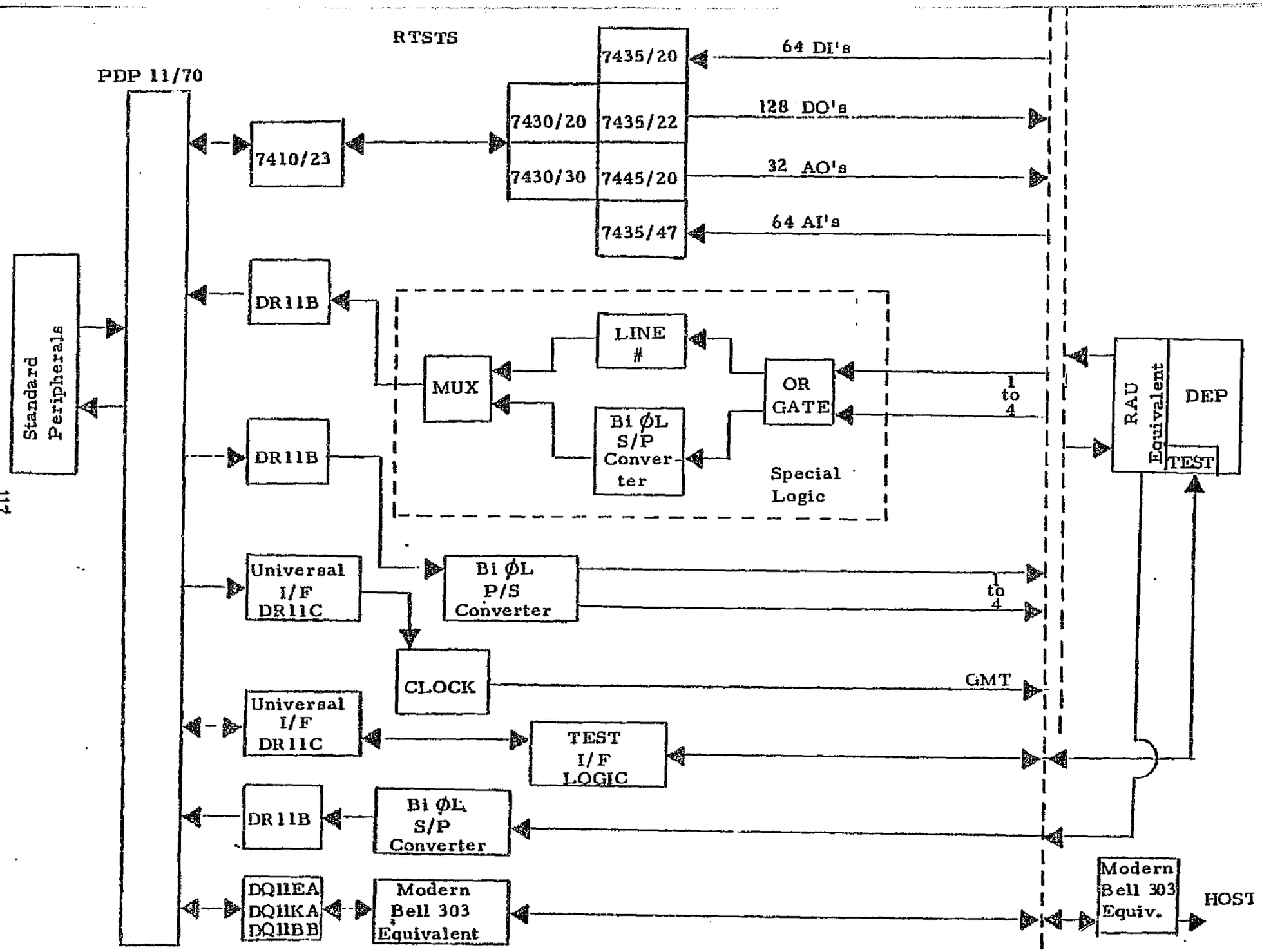
RTSTS
PDP 11/70
Standard Peripherals
7410/23
7430/20
7430/30
7435/20
7435/22
7445/20
7435/47
64 DI's
128 DO's
32 AO's
64 AI's
DR11B
DR11B
MUX
LINE #
Bi ØL S/P Converter
OR GATE
Special Logic
1 to 4
RAU Equivalent
DEP
TEST
Universal I/F DR11C
Bi ØL P/S Converter
1 to 4
CLOCK
GMT
Universal I/F DR11C
TEST I/F LOGIC
DR11B
Bi ØL S/P Converter
DQ11EA
DQ11KA
DQ11BB
Modern Bell 303 Equivalent
Modern Bell 303 Equiv.
HOST

RTSTS Simulation Computer

PDP 11/35	Includes Processor, Memory Management, Stack Limit Option, 32K Core Memory	$20,495
KE11E	Extended Inst. Set	$ 1,400
KE11F	Floating Point	$ 1,500
MF11-UR	32K Core Memory (Parity)	$ 8,700
DB11-A	Peripheral Mounting Panel	$ 200
BM873YA	Bootstrap Loader	$ 400
KL11-A	Asynchronous Line Interface to Drive Graphics Display	$ 500
RK11DE	Moving Head Disk Drive and Controller	$11,000
RK05-AA	Disk Drive, 1.2 Million Words	$ 5,100
---------	Disk Cartridge	$ 100
LV11-BA	Line Printer, 132 Col., 96 Ch., 500 LPM	$12,400
TMA11-EA	9 Tr. Magnetic Tape & Controller	$10,745
TU10EE	2nd Tape Drive	$ 7,505
CR11	300 CPM Card Reader	$ 4,860
DR11-B	Parallel DMA I/F	$ 1,400
4014, 2, 30, 31, 34	Graphics Display	$ 9,000
MSP007	Graph Tablet I/F	$ 1,200
MSP004	Refresh Memory	$ 1,200
HW-1-11S	11 x 11 Tablet and Control	$ 3,000
616	2nd Display	$ 3,000
2MF11-UR	Additional 64K Memory	$17,400
H960-DH	Mounting Rack	$ 3,000
--------	Upgrade to PDP 11/70	$25,000
		$149,185

Interface Equipment

RAU Interface Simulator	Hardware	Manpower
(2) DR11-B 2 x $1470 =	$2940	0
(1) Special Logic (Eng. Estimate) =	$3000	4 mm
(1) Bi Phase Logic Parallel-Serial Converter (Eng. Est.) =	$200	2 mm
(1) 7410/23 I/O Expander =	$900	
(1) 6430/20 (Card Rack, Power Supplies) =	$1050	
(1) 7430/30 (Card Rack, Digital/Analog Power Supplies) =	$1290	
(1) 7435/20 (Digital Inputs) $106 x 4 =	$420	1 mm
(1) 7435/22 (Digital Outputs) $170 x 4 =	$680	
(1) 7445/20 (Analog Outputs) $240 x 8 =	$1920	
(1) 7435/47 (Analog Inputs) $675 x 4 =	$2700	
(1) DR11C Universal Interface =	$490	
(1) Clock Logic (Eng. Estimate) =	$1310	2 mm
DEP Test Interface		
(1) DR11C Universal Interface =	$490	0
(1) Test Interface Logic (Eng. Estimate) =	$1410	2 mm
HRM Interface		
(1) DR11B =	$1470	0
(1) Bi Phase Serial-Parallel Converter (Eng. Estimate) =	$300	1 mm
Remote Job Entry Terminal Interface		
(1) DQ11-EA =	$4500	0
(1) DQ11-KA (Clock) =	$200	0
(1) DQ11-KB (Line Control) =	$1300	0
(1) DQ11-BB =	$900	0
(2) Modem (Bell 303 Equivalent) 2 x $5000 =	$10000	0
TOTALS	$37,470	12 mm

Cost Total Interface Hardware

Hardware	=	$37,470
1 man year x $50,000	= +	$50,000
		$87,470

Total RTSTS Initial Cost

Simulation Computer =		$149,185
Interface Equipment =		$ 87,470
Operating System Mods (4.5 mm) =		$ 18,750
Integration and Test =		$ 25,000
Packaging and Transportability =		$ 50,000
	Total	$330,405

Maintenance Costs

Interface Hardware =		$ 37,470
Simulation Computer =		$149,185
	Total	$186,655
		X 8%
		$ 14,932/Year

RTSTS Cost Per Copy

Simulation Computer =		$149,185
Interface Equipment =		$ 87,470
Integration and Test =		$ 25,000
Packaging and Transportability =		$ 50,000
	Total	$311,655

RTSTS

Sim Computer	11-35	$130K *
Upgrade to	11-70	25K
Interface Hardware		100K **
RJE Station (for HAL & GOAL Compilation at HOST)		25K
Portability Features (Packaging) and Integration		50K
		$330K

* Same as STIL except added:
1 Disk Drive for a total of 2
Increased Line Printer Speed from 60 LPM to 500 LPM.

** Same as CID interface to a Single RAU.
Includes standard interface, special design engineering, and Parts and Interrupt Routine Software for Interface Processor.

CDMS SIMULATOR

Simulation Computer

		Hardware	Manpower
CPU PDP 11/35		$20,500	0
Display (Light Pen, Keyboard, A/N, Graphics)	GT40AA	$14,500	0
Magnetic Tape/Controller	TMA11-EA	$10,757	0
Disk (2.4 Megabyte)	R11DE	$11,000	0
Card Reader	CR11	$ 4,860	0
		$61,605	

Interface Equipment

7435/20	$106 X 4	$ 420	
7435/22	$170 X 4	$ 680	
7435/47	$675 X 4	$ 2,700	1 mm
7430/30		$ 1,290	
7430/20		$ 1,050	
7410/23		$ 900	
DR11B	$147 X 2	$ 2,940	0
Clock (Engineering Estimate)		$ 1,310	2 mm
Special Logic (Engineering Estimate)		$ 3,000	4 mm
DR11C		$ 490	0
Bi-Phase Logic P/S Converter		$ 200	2 mm
	Total	$14,980	9 mm

Total Interface Equipment

Hardware	$14,980
Manpower (9 mm @ $50K/Yr.)	$37,500
Total	$52,480

CDMS Simulator Initial Cost

Simulation Computer		$61,605
Interface Equipment		$52,480
Integration and Test (3 mm)		$12,500
Operating System Mods. (2 mm)		$ 8,333
	Total	$134,918

Maintenance Costs

Simulation Computer	$61,605
Interface Equipment Hardware	$14,980
	$76,585
	X 8%
	$6,127/Yr.

CDMS Simulator Cost Per Copy

Simulation Computer		$61,605
Interface Equipment		$52,480
Integration and Test		$12,500
	Total	$126,585

HOST INTERFACE DEVICE

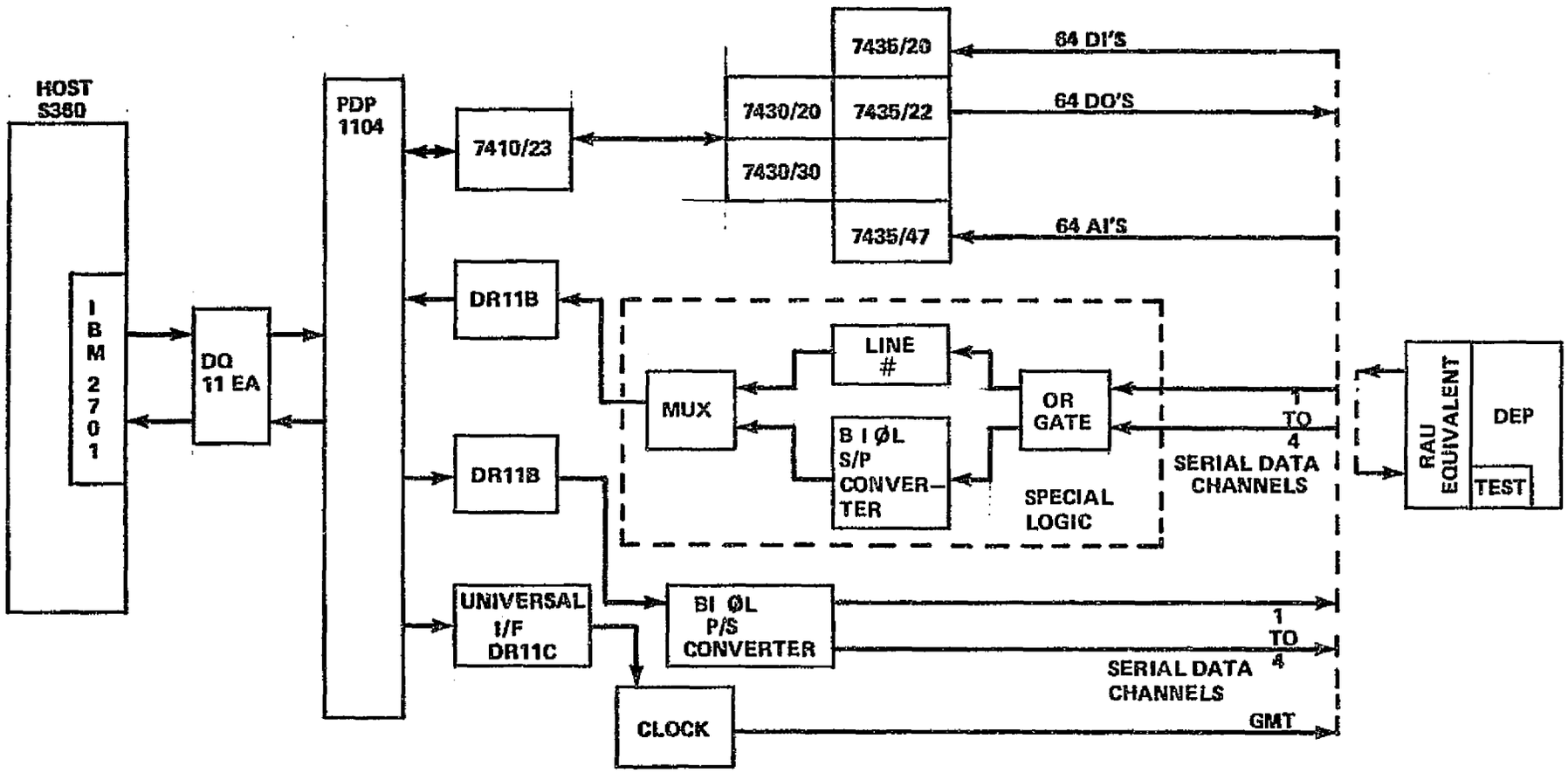

Interface Equipment

7410/23		=	$ 900	1 mm	
7435/20	$106 X 4	=	$ 420		64 DI's
7435/22	$170 X 4	=	$ 680		64 DO's
7435/47	$675 X 4	=	$2,700		64 AI's
7430/30		=	$1,290		
7430/20		=	$1,050		
Clock (Engineering Estimate)		=	$1,310	2 mm	
Special Logic (Engineering Estimate)		=	$3,000	4 mm	
Bi-Phase Logic P/S Converter		=	$ 200	2 mm	
PDP 1104		=	$2,495	0	
DQ 11EA		=	$4,500	0	
(2) DR11B	$1,470 X 2	=	$2,940		
DR11C		=	$ 490		
			$21,975	9 mm	

Cost Total

Interface Hardware	Hardware		$21,975
	9 mm (3/4 X 50K)	=	$37,500
			$59,475

Total HID Initial Cost

Interface Equipment	=	$59,475
PDP 1104 Operating System Mods. (4.5 mm)	=	$18,750
S360 Host Operating System Mods. (4.5 mm)	=	$18,750
Integration and Test (4.8 mm)	=	$20,000
Packaging and Transportability	=	$25,000
		$141,975

Maintenance Costs

Interface Hardware	$21,975.00
	X .08
	$1,758.00 Per Yr.

HID Cost Per Copy

Interface Equipment	$59,475
Integration and Test	$20,000
Packaging and Transportability	$25,000
	$104,475

7.C Cost-Per-Statement/Cost-Per-Instruction

SOFTWARE COSTING METHOD (MSFC)

CENTRAL COMPUTER

O ANALYSIS OF REQUIREMENTS	$20/STATEMENT
O SOFTWARE DESIGN	
O CODING AND CHECKOUT	$10/STATEMENT
O INTEGRATION	$30/STATEMENT
O VALIDATION	
	$60/STATEMENT

MINI COMPUTER

O ANALYSIS OF REQUIREMENTS*	$15/STATEMENT
O SOFTWARE DESIGN	
O CODING AND CHECKOUT	$10/STATEMENT
O INTEGRATION **	$20/STATEMENT
O VALIDATION **	
	$45/STATEMENT

* Assumes PI and programmer work closely with each other and do not formalize the requirements documentation.

** There is less software integration due to independent nature of experiment. Documentation and validation can be reduced. Some form of complete documentation on each software function must be provided, however, so that applicability of these functions for inclusion in common library can be judged.

GOAL Programs $30 per Statement

- Programs are procedure-oriented with little mathematical operations.

- GO/NO-GO logic in the procedures instead of redundancy management.

- Requirements are relatively well known because of maturity of hardware being checked out.

- Translation of requirements is relatively uncomplicated since interfaces are from design engineer to checkout engineer instead of hardware designer to programer.

- Small amount of interaction between components being checked out at component level.

- Integrated testing is typically end to end and go/no-go instead of scientific analysis.

Requirements Analysis	$10	1/3
Coding and Checkout	$ 5	1/6
Verification	$15	1/2
	$30/Statement	

Machine Language Programs

In this study, use of assembly language was considered only for development of the operating system for the dedicated experiment processors. Operating system development is the most complex form of software generation and requires the services of programmers with unique skills and a thorough knowledge of the hardware systems with which the software must interface. Therefore, the cost per assembly instruction is high and can not be correlated directly to the cost per statement of high order languages.

- Familiarity with machine binary operation is required and must be considered during coding which increases complexity. (Overflows, conversion of decimal to binary arithmetic, etc.)

- Number of programer written instructions is increased thereby increasing probability of error.

- Requirements analysis must go deeper for analysis of algorithym implementations, mathematical precision analysis, etc.

- Number of program/program interfaces is increased and are more complex thereby increasing probability of error.

- The support software documentation (listings) is complex and presents difficulty to interpretation by programers not familiar with the original design thereby increasing maintenance problems as personnel turnover occurs.

Requirements Analysis	$33	1/3
Coding and Checkout	$17	1/6
Verification	$50	1/2
	$100/Instruction	

PREFLIGHT SOFTWARE SIZING RATIONALE

Saturn History

LVDC/DA interface signals	=	86
LVDC/DA # instructions	=	4,650
average # instructions/signal	=	54

ATM History

ATMDC interface signals	=	275
ATMDC # instructions	=	7,897
average # instructions/signal	=	29

Mission 8 of Spacelab

# interface signals	=	81.6
# payload elements	=	1.3
average # interface signals	=	62.77

Assume preflight job for each payload element is the same and equivalent to Saturn LVDC = 4,650 instructions.

$$= \frac{4,650}{5} = 930 \text{ HOL statements at a cost of \$30/Statement.}$$

(A) = ((Number of HOL Statements) (Cost/Statement)) Yr.

Number of Statements = Number of HOL Statements per payload element X Number of Payload Elements = 930 X PE/Yr. (New Flights).

Cost/Statement = $30.

Rationale for Simulation Software Required for Payload Elements

Engineering Estimate - 21K table words per payload Element for Simulation Software.

Engineering Estimate that 21K table words equates to approximately 1/3 X 21K = 7K machine language instructions.

7K ÷ 5 = 1.4K HOL Statements

1.4K X $45/Statement = $63K/Payload Element

7. D Software Sizing

ESA ESTIMATE OF DELIVERED SOFTWARE

EGSE GROUND CHECKOUT

	SIZE	HOL	MODULES
1 - GCOS	21.8K	4000	40
2 - SELF TEST	30.0K	6000	60
3 - DATA REDUCTION	5.0K	1000	10
4 - PCM A/D	1.0K	200	2
5 - ESI/CDMS	3.0K	600	6
6 - ESI/EPDS	3.0K	600	6
7 - ESI/ECS	1.5K	300	3
8 - ESI/INSTRUMENTATION	3.5K	700	7
9 - GND C/O CDMS	10.5K	2100	21
10 - GND C/O EPDS	12.0K	2400	24
11 - GND C/O ECS	4.0K	800	8
12 - GND C/O POWER ON/OFF	10.0K	2000	20
13 - GND C/O INST. CAL.	12.0K	2400	24
14 - GND C/O EXP. INTERFACE	8.8K	1700	17
15 - GND C/O INTEGRATED TEST	20.0K	4000	40
16 - GND C/O MONITOR	1.7K	300	3
TOTAL	145.5K	29100	291

TYPICAL REQUIREMENTS (REGION) NOT ESA ESTIMATE

*EGSE PRODUCTION SET

	SIZE	HOL	MODULES
1 - MACRO ASSY	8.0K	1600	16
2 - LINKAGE EDITOR	4.0K	800	8
3 - ANSI FORTRAN	16.0K	3200	32
4 - UTILITIES	4.0K	800	8
TOTAL	32.0K	6400	64

* GCOS Included in Ground Checkout.

ESA ESTIMATES OF DELIVERED SOFTWARE

EXPERIMENT COMPUTER

	SIZE	HOL	MODULES
1 - INFLIGHT MONITOR	.7K	140	2
2 - ECDS	20.0K	4000	40
TOTAL	20.7K	4140	42

ESA ESTIMATES OF DELIVERED SOFTWARE

SUBSYSTEM COMPUTER

	SIZE	HOL	MODULES
1 - EXP CDMS C/O	.7K	140	2
2 - S/S CDMS C/O	.7K	140	2
3 - EPDS C/O	.3K	60	1
4 - ECS C/O	.4K	80	1
5 - INFLIGHT POWER MONITOR	.3K	60	1
6 - INFLIGHT MONITOR	.7K	140	2
7 - SCOS	20.0K	4000	40
TOTAL	23.1K	4620	49

ESA ESTIMATES OF DELIVERED SOFTWARE

HOST AND SIMULATION SUPPORT

	SIZE	HOL	MODULES
1 - ICS	15.0K	3000	30
2 - EGSE SIM	20.0K	4000	40
3 - CDMS SIM	20.0K	4000	40
4 - SPACELAB SIM	10.0K	2000	20
5 - ECOS/SCOS/GCOS SIM	20.0K	4000	40
6 - SIM CONTROL	5.0K	1000	10
7 - APPLICATION SIM	10.0K	2000	20
8 - HOST DATA REDUCTION	28.0K	5600	56
TOTAL	128.0K	25600	256

PAYLOAD ELEMENT FLIGHTS

	77	78	79	80	81	82	83	84	85	86	87	88	89	90	91
1. AS-01-S					X_{100}	X_{40}			X_{30}						
2. AS-03-S							X_{100}		X_{40}						X_{30}
3. AS-04-S					X_{100}	X_{40}	X_{30}	X_{20}	XX		XXX	X	XXX	XX	XXX
4. AS-05-S							X_{100}								
5. AS-07-S										X_{100}					
6. AS-09-S										X_{100}					
7. AS-10-S											X_{100}				X_{40}
8. AS-15-S								X_{100}	X_{40}			X_{30}	X_{20}	X	
9. AS-18-S													X_{100}		
10. AS-19-S							X_{100}		X_{40}		X_{30} X_{20}		X		XX
11. AS-20-S											X_{100}			X_{40}	X_{30}
12. HE-11-S						X_{100}	X_{40} X_{30} X_{20}	X	XX	XX	XXX	XXXX	XX	XXX	XXX
13. HE-12-S				X_{100}		X_{40}	X_{30}	X_{20}	X						
14. HE-13-S						X_{100}	X_{40}	X_{30}	X_{20}						
15. HE-16-S							X_{100}				X_{30}	X_{20}	X	X	
16. HE-18-S										X_{100}	X_{40}	X_{30}	X_{20} X	X	X
17. SO-11-S						X_{100}	X_{40} X_{30}	X_{20} X	X	XX					
18. SO-12-S											X_{100}				
19. SO-15-S															

X = Software Required

PAYLOAD ELEMENT FLIGHTS

	77	78	79	80	81	82	83	84	85	86	87	88	89	90	91
20. SO-17-S						X_{100}	X_{40} X_{30}	X_{20}	X	XX	XX	XXX	XX	XX	XX
21. AP-06-S					X_{100}	X_{40}	X_{30} X_{20}	XX	XX	XX	XX	XX	XX	XX	XX
22. AP-09-S				X_{100}	X_{40}				X_{30}		X_{20}		X	X	X
23. AP-13-S				X_{100}	X_{40}				X_{30}		X_{20}		X	X	X
24. EO-01-S				X_{100}	X_{40}		X_{30}		X_{20} X		XX	X	XX	XXX	XXX
25. EO-06-S						X_{100}	X_{40}	X_{30} X_{20}	X	XX	X	XX	X	XX	XX
26. EO-19-S				X_{100}	X_{40}	X_{30}	X_{20} X	X	XX	XX	XXX	XXX	XXX	XXX	XXX
27. EO-20-S						X_{100}		X_{40}		X_{30}	X_{20}	X	XX	X	XX
28. OP-02-S						X_{100}	X_{40}	X_{30}	X_{20}	X_{10} X	X	XX	X	XX	XX
29. OP-03-S						X_{100}	X_{40}	X_{30}	X_{20}	X	XX	XX	XXX	XXX	XXXX
30. SP-13-S							X_{100}	X_{100}	X_{40}	X_{30}	X_{20}	X_{10}	X		X
31. SP-14-S						X_{100}	X_{40}	X_{30} X_{20}	X_{10}	X	X	X	X	X	X
32. SP-15-S						X_{100}	X_{40}	X_{30} X_{20}	XXX	XXX	XXX	XXX	XXX	XXX	XXXX
33. SP-31-S						X_{100}		X_{40}		X_{30}	X_{20}	X	XX	X	XX
34. LS-09-S					X_{100} X_{40}	X_{30} X_{20}	XX	XX	XX	XX	XX	XX	XX	XX	XX
35. LS-13-S				X_{100}	X_{40}				X_{30}		X_{20}		X	X	X
*36. ST-31-S				0_{100}	0_{40}				0_{30}		0_{20}		0	0	0
37. ST-58-S					X_{100}	X_{40}	X_{30} X_{20}	XXX	XXX	XXX	XXXX	XXXX	XXXX	XXXXX	XXXXX

X = Software Required

* 0 = No Software Required

PAYLOAD ELEMENT FLIGHTS

	77	78	79	80	81	82	83	84	85	86	87	88	89	90	91
38. CN-04-S						X_{100}		X_{40}		X_{30}	X_{20}	X	XX	X	XX
*39. CN-05-S							0_{100}		0_{40}		0_{30}	0_{20}	0	00	00
40. CN-08-S				X_{100}	X_{40}	X_{30}		X_{20}	X	X	XX	X	XXX	XX	XXX
41. APE-01				X_{100}	X_{40}				X_{30}		X_{20}		X	X	X
42. APE-07				X_{100}	X_{40}				X_{30}		X_{20}		X	X	X
43. ASE-01				X_{100}	X_{40}				X_{30}		X_{20}		X	X	X
44. EOE-01				X_{100}	X_{40}				X_{30}		X_{20}		X	X	X
45. SPE-01				X_{100}	X_{40}				X_{30}		X_{20}		X	X	X
46. SPE-80/85				X_{100}	X_{40}				X_{30}		X_{20}		X	X	X
47. STE-IO				X_{100}	X_{40}				X_{30}		X_{20}		X	X	X
Total Instructions															
Total HOL Statements															
Accumulated Common Library															
Total (n41) - A. C. L. (n)															
Total Unique Software Development															
No. of Modules (Tot. New ÷ 500)															
A. # new flights/PE**				*** 14	*** 5	*** 12	*** 4	*** 2	*** 0	*** 3	*** 3	*** 1	*** 1	*** 0	*** 0
B. # maint. flights/PE**				0	*** 14	*** 9	*** 24	*** 27	*** 44	*** 30	*** 50	*** 39	*** 53	*** 54	*** 64

*** Need DEP X = Software Required * 0 = No Software Required ** Excludes ST-31-S and CN-05-S

	P/L Element	Main Mem.	Instr.	HOL 100	X0.4	X0.3	X0.2	X0.1
1.	AS-01-S	54,800	12,180	2436	974	731	487	244
2.	AS-03-S	8.000	2,480	496	198	149	99	50
3.	AS-04-S	17,900	7,250	1450	580	435	290	145
4.	AS-05-S	4,000	1,240	248	99	74	50	25
5.	AS-07-S	56,000	17,360	3472	1389	1042	694	347
6.	AS-09-S	21,000	7,440	1488	595	446	298	149
7.	AS-10-S	4,000	1,240	248	99	74	50	25
8.	AS-15-S	55,000	17,050	3410	1364	1023	682	341
9.	AS-18-S	25,000	7,750	1550	620	465	310	62
10.	AS-19-S	4,000	1,240	248	99	74	50	25
11.	AS-20-S	55,000	17,050	3410	1364	1023	682	341
12.	HE-11-S	8,000	2,480	496	198	149	99	50
13.	HE-12-S	1,800	558	112	45	34	22	11
14.	HE-13-S	3,600	1,116	223	89	67	45	22
15.	HE-16-S	4,000	1,240	248	99	74	50	25
16.	HE-18-S	3,600	1,116	223	89	67	45	22
17.	SO-11-S	14,000	4,340	868	347	260	174	87
18.	SO-12-S	8,500	2,635	527	211	158	105	53
19.	SO-15-S	14,000	4,340	868	347	260	174	87
20.	SO-17-S	14,000	4,340	868	347	260	174	87
21.	AP-06-S	45,000	26,100	5220	2088	1566	1044	522
22.	AP-09-S	3,247	2.140	428	171	128	86	43
23.	AP-13-S	3,371	1,670	334	134	100	67	33
24.	EO-01-S	6,120	4,110	822	329	247	164	82
25.	EO-06-S	6,200	3,782	756	302	227	151	76
26.	EO-19-S	1,402	1,010	202	81	61	40	20
27.	EO-20-S	3,300	1,550	310	124	93	62	31
28.	OP-02-S	5,000	1,200	240	96	72	48	24
29.	OP-03-S	18,700	4,480	896	358	269	179	90
30.	SP-13-S	8,500	2,635	527	211	158	105	53
31.	SP-14-S	12,600	3,906	781	312	234	156	78
32.	SP-15-S	8,500	2,635	527	211	158	105	53
33.	SP-31-S	10,500	3,240	648	259	194	130	65

	P/L Element	Main Mem.	Instr.	HOL 100	X0.4	X0.3	X0.2	X0.1
34.	LS-09-S	40,000	18,000	3600	1440	1080	720	360
35.	LS-13-S	4,312	1,930	386	154	116	77	39
36.	ST-31-S	N/A	N/A	N/A	N/A	N/A	N/A	
37.	ST-58-S	15,000	9,450	1890	756	567	378	189
38.	CN-04-S	10,012	3,720	744	298	223	149	74
39.	CN-05-S	N/A	N/A	N/A	N/A	N/A	N/A	
40.	CN-08-S	2,311	1,130	226	90	68	45	23
41.	APE-01	3,338	2,440	488	195	146	98	49
42.	APE-07	3,075	2,130	426	170	128	85	43
43.	ASE-01	1,470	1,070	214	86	64	43	21
44.	EOE-01	2,484	1,860	372	149	112	74	37
45.	SPE-01	1,516	1,070	214	86	64	43	21
46.	SPE-80/85	1,954	1,380	276	110	83	55	28
47.	STE-20	3,014	2,200	440	176	132	88	44
48.	VFI	1,124	1,020	204	82	61	41	20

7.E Central Computer Functions in Distributed Concept

CRT Display Services

Mass Storage Services

PCM Services

HRM Management

Orbiter Interface

- Timing
- Uplink
- Attitude Data

Mission Control/Timelining/Scheduling

Caution and Warning

On-Board Checkout of Experiment CDMS

DEP Interface Services

CRT DISPLAY SERVICES

FUNCTION	CDMS REQUIREMENT		DEVELOPMENT DELTA		
	Central	Dist.	Effort	Technique	Remarks
1. Storage and Distribution of Keyboard Input Data.	√	√	0	0	
2. Engineering Units Conversion of Raw Data for Display.	√	√	0	0	
3. Alpha-Numeric Display Formatting to Display Electronics.	√	√	0	0	
4. Vector/Graphics Display Formatting to Display Electronics.	√	√	0	0	Graphics are limited on CDMS Baseline. Added capability will require more software support.
5. Access of Background Display Formats From Mass Storage	√	√	0	0	
6. Resource Management (Allocation/Deallocation) of Display CRT's and Pages	√	√	0	0	
7. Access and Display of RAU Data	√	√	0	0	
8. Standard Monitor/Control o Issue Discrete/Analog o Monitor Discrete/Analog	√	√	0	0	

CENTRAL STANDARD SERVICES FOR DEP

Display

- Storage and Transfer of Keyboard Input Data for DEP's
- Engineering Units Conversion of Raw Data for Display
- Alpha-numeric Display Formatting to Display Electronics
- Vector/Graphics Display Formatting to Display Electronics
- Access of Background Display Formats from Mass Storage
- Resource Management (Allocation/Deallocation) of Display CRT's and Pages
- Access of Data Existing on the RAU's for Display or DEP
- Standard Monitor/Control, Man/Machine Interface Functions
    - o Issue Discrete/Analog
    - o Monitor Discrete/Analog

MASS STORAGE SERVICES

FUNCTION	REQUIREMENT		DEVELOPMENT DELTA		
	Central	Dist.	Effort	Technique	Remarks
1. Mass Storage Allocation	√	√	√	√	File information blocks must be built in CPP for DEP tasks using mass storage.
2. Mass Storage Deallocation	√	√	0	0	
3. Directory Maintenance	√	√	0	0	
4. Data Storage	√	√	0	√	Data must be accepted from DEP via DEP interface.
5. Data Retrieval	√	√	0	√	Data must be returned to DEP via DEP interface
6. File Positioning (Rewind, Skip, Backspace, Find)	√	√	0	0	

Mass Storage

- Read/Write Transfer of Data Files on the Storage Device
- Storage of Background Display Formats for the DEP's
- Storage of Application Programs for the DEP's
- Storage of Central Computer Operating System Overlays

PCM SERVICE

FUNCTION	REQUIREMENT		DEVELOPMENT DELTA		
	Central	Dist.	Effort	Technique	Remarks
1. Send Downlink Message	√	√	0	0	DEP messages must be received via the DEP interface.
2. Update PCM Data Table	√	√	0	0	

PCM Services

- Polling and transfer of data into PCM telemetry buffers

  (If high rate data bus is included in CDMS, this function should be the same as would exist in centralized configuration. Data format should be established by the DEP. Relative time is established by the standard master frame, minor frame cycle.)

  - o DEP's will have to conform to ECOS synchronization for PCM telemetry (i.e., 1, 10, 100 samples per second).

  - o Time tagging of individual data elements is responsibility of data collection system (DEP).

- Telemetry table buffer size, starting memory location, and sampling frequency is controlled by Orbiter/Spacelab ICD.

HRM SERVICE

FUNCTION	REQUIREMENT		DEVELOPMENT DELTA		
	Central	Dist.	Effort	Technique	Remarks
1. Send Downlimk Message	√	√	0	√	DEP messages must be received via the DEP interface.
2. Read High Rate Data	√	√	0	0	Data request from DEP, Data returned to DEP.

HRM Management

- Schedule and Control HRM Allocation.
- Function Performed by Central Computer Will be the Same in Either Distributed or Centralized Concept.
- Each Experiment has Access to an HRM Input for Scientific Data Under Modified Spacelab Baseline.
- Use of CDMS/HRM Data Link will Still be Required in the Distributed Concept Even Though Data Volume Will be Reduced.

ORBITER INTERFACE

FUNCTION	REQUIREMENT		DEVELOPMENT DELTA		
	Central	Dist.	Effort	Technique	Remarks
1. Time	√	√	0	√	Pass time to DEP upon request.
2. State Vector (Attitude)	√	√	0	√	Pass state vector to DEP upon request.
3. Pass Uplink Commands	√	√	0	√	Identify and forward DEP commands.

Orbiter Interface

- The Orbiter Interface Data is of the Same Type for Either DMS Concept.

- Memory Locations in the CDMS Experiment Computer Must be Allocated for Storage of Orbiter Data Accessible to Multiple Applications Running in the CDMS. Allocation of These Same Common Areas Will be Available to the DEP's. The only Difference is that the DEP's will Access this Data DMA via the Data Bus.

MISSION CONTROL/TIMELINING/SCHEDULING

FUNCTION	REQUIREMENT		DEVELOPMENT DELTA		
	Central	Dist.	Effort	Technique	Remarks
1. Accept Operator Input	√	√	0	√	Input must specify if MSG is for DEP.
2. System Output to Operator.	√	√	0	√	MSG must indicate source: DEP or CPP
3. Start/Stop Experiment	√	√	-	√	Experiments run on DEP's. CPP command to DEP to start or stop.
4. Start/Stop Task	√	√	0	0	CPP only.
5. Change Timeline	√	√	-	-	Only start/stop times need be altered.
6. Schedule/terminate Task on Operator Request.	√	√	0	0	Only tasks running on CPP.
7. Schedule/terminate Task on DEP Request.	0	√	√	√	DEP can request task execution on CPP.
8. Accept Uplink Command	√	√	0	√	DEP commands must be sent to and honored by DEP's.

Mission Control/Timelining/Scheduling

- These functions are required in either concept. The difference lies in invoking a DEP operation instead of invoking an experiment application.

- These functions could result in the greatest mission-to-mission central computer software change.

- Interface with Spacelab and Orbiter mission planning will be quite complex in either case, but loses the common central coordination in a distributed DMS concept that would be available for a centralized DMS.

CAUTION AND WARNING

FUNCTION	REQUIREMENT		DEVELOPMENT DELTA		
	Central	Dist.	Effort	Technique	Remarks
1. Hardware Monitor	√	√	0	0	
2. Software Monitor	√	√	0	0	

Caution and Warning

- Computer backup of C&W signals for the experiments would appear as a formatted display to the central computer and be handled like all other displays originating at the DEP.

- Discrete/analog caution and warning from the RAU's would be treated by the ECOS monitor exactly the same in either DMS configuration.

ON-BOARD CHECKOUT OF EXPERIMENT CDMS

FUNCTION	REQUIREMENT		DEVELOPMENT DELTA		
	Central	Dist.	Effort	Technique	Remarks
1. Verify Hardware Configuration	√	√	0	0	Check DEP connect points on RAU's.
2. Detect and Isolate Faults in Hardware.	√	√	0	0	Only verify running state for DEP's.

On-Board Checkout of Experiment CDMS

- Function will change only with modification of the IOB, Data Bus, or RAU - or with the addition of other peripherals (e.g., graphics, random access mass memory, etc.).

- DEP's should be turned on and off when their respective RAU's are turned on or off (switch function). They should then initialize and enter an idle loop waiting for a commanded mode of operation from the central processor (checkout/calibrate, experiment operation, data acquisition).

- DEP mode initiation should occur through a normal data bus digital transmission or an interrupt originating at the central computer and keyed to a keyboard input, switch command uplink command, or prestored timeline.

DEP Interface Services

- The DEP interface through the RAU utilizes the PCM command lines (digital data) from the RAU and the High Rate Data block transfer to the central computer through the high rate data bus.

- Function of this data transfer remains the same under either DMS concept.

7.F Consumable Stock

RTSTS consumables are attached. See costing method in baseline option (IA1) for central facility consumables.

RTSTS CONSUMABLES

1. Electrical Power

   1/10th of S/360-Model 65 for 1 shift, 5 day week

2. Paper Line Printer and Console

   1 - 500 Line Per Minute Printer 1 shift, 5 day week
   1 - Console Typewriter 1 shift, 5 day week

3. Tab Cards

   1 Card Reader Punch 1 shift, 5 day week

4. Magnetic Tape

   50 Tapes Per Test Set 1 shift, 5 day week

5. Printer and Console Ribbon 1 shift, 5 day week

	Cost Per Year
1. Power	$4000
2. Paper	4500
3. Tab Cards	2500
4. Tape	700
5. Ribbons	500
	$12,250

Average usage based on CSC evaluation of Computer Operations Expendable Supplies.

7.G Central Site Computer Additions

See costing method sheets for baseline option IA1.

7.H Equipment Maintenance

See costing method sheets for baseline option, IA1.

7.I Miscellaneous Supporting Data

RATIONALE

OVERHEAD

15% is Assumed

1. M&S data indicates 5% to 25% in Flight Operating Systems. An operating system of the complexity anticipated on Spacelab is 15% by M&S estimates.

2. Joint Users Document Estimate = 5%

3. GDC estimate of operating system overhead is not given but stated that 5% appears low in August 29, 1975 report.

MAX. 325K

	MISSION P/L	P/L ELEMENTS	MISSION P/L EAPS	P/L ELEMENT EAPS	DEP ASSIGNED TO
AS-04-S Flies on All Three	AST 10a		346,300		
		AS-01-S		178,700	
		AS-04-S		167,600	√
	AST 10d		347,600		
		AS-04-S		167,600	√
		AS-15-S		180,000	
	AST 10k		347,600		
		AS-04-S		167,600	√
		AS-20-S		180,000	
Same	AST 11b		2,500,000		
		SO-12-S		2,500,000	√
	AST 11c		2,500,000		
		SO-12 S		2,500,000	√
	AST 11d		2,500,000		
		SO-15-S		2,500,000	√
	AST 11e		2,500,000		
		SO-11-S		2,500,000	√
	MU-2		2,500,000		
		HE-11-S		20,000	
		SO-17-S		2,500,000	√
		EO-19-S		7,600	

MASTER SCHEDULE FOR VALIDATION

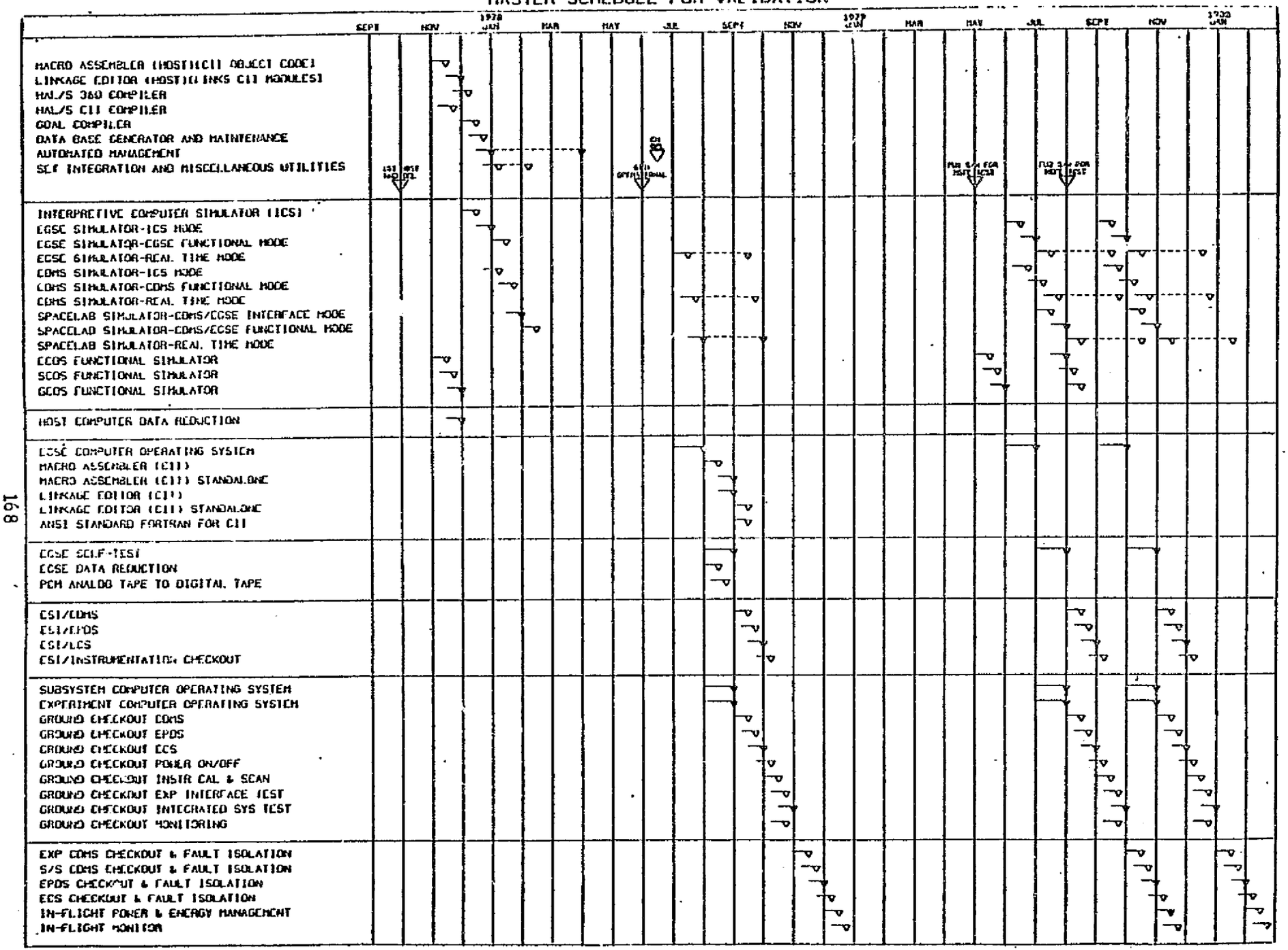

FIGURE 2-2

ORIGINAL PAGE IS OF POOR QUALITY

APPROVAL

SPACELAB EXPERIMENT COMPUTER STUDY
Volume II: Study Elements and Approach

By James L. Lewis, Bobby C. Hodges, and James O. Christy

The information in this report has been reviewed for security classification. Review of any information concerning Department of Defense or Atomic Energy Commission programs has been made by the MSFC Security Classification Officer. This report, in its entirety, has been determined to be unclassified.

This document has also been reviewed and approved for technical accuracy.

J. T. POWELL
Director, Data Systems Laboratory

☆U.S. GOVERNMENT PRINTING OFFICE 1976- 740-049/53 REGION NO. 4