Giesecke

SEPTEMBER 1975

NASA CR-151148

ONBOARD EXPERIMENT DATA SUPPORT FACILITY

TASK 1 REPORT

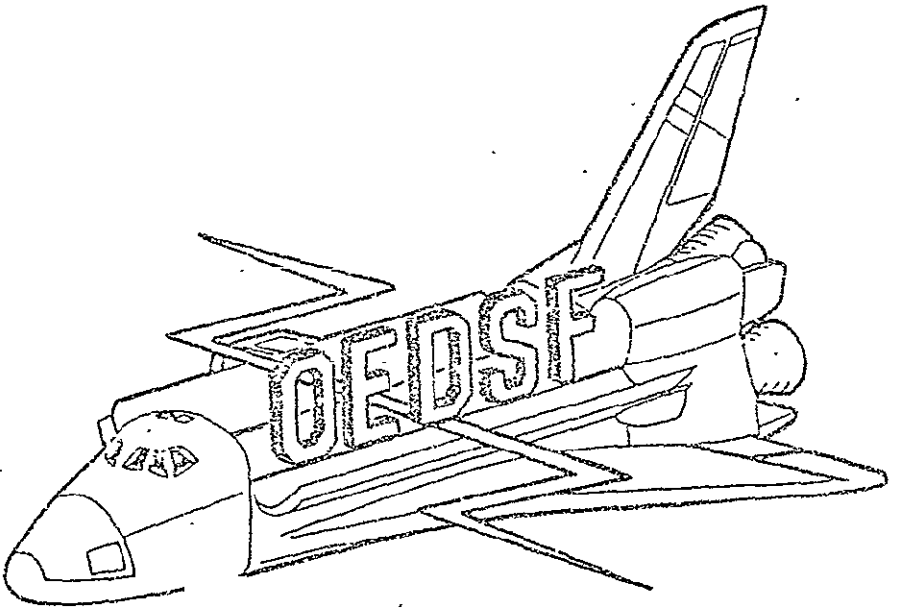

(NASA-CR-151148) ONBOARD EXPERIMENT DATA SUPPORT FACILITY, TASK 1 REPORT (General Electric Co.) 225 p HC A10/MF A01 CSCL 22B

N77-15076

Unclas

G3/16 12498

Contract NAS 9-14651

REPRODUCED BY
NATIONAL TECHNICAL INFORMATION SERVICE
U.S DEPARTMENT OF COMMERCE
SPRINGFIELD, VA. 22161

GENERAL ELECTRIC

226

NOTICE

THIS DOCUMENT HAS BEEN REPRODUCED FROM THE BEST COPY FURNISHED US BY THE SPONSORING AGENCY. ALTHOUGH IT IS RECOGNIZED THAT CERTAIN PORTIONS ARE ILLEGIBLE, IT IS BEING RELEASED IN THE INTEREST OF MAKING AVAILABLE AS MUCH INFORMATION AS POSSIBLE.

SEPTEMBER 1975

CONTRACT NAS9-145651
DRL NO. T - 1122 (MA-461TA)

ONBOARD EXPERIMENT DATA SUPPORT FACILITY

TASK 1 REPORT

DEFINITION OF PROCESSING REQUIREMENTS

PREPARED FOR

NATIONAL AERONAUTICS AND SPACE ADMINISTRATION

JOHNSON SPACE CENTER

HOUSTON, TEXAS

APPROVALS:

Georges G. Frippel
Program Manager

Robert L. Giesecke
Technical Monitor
NASA-JSC Engineering and Development

PREPARED BY

GENERAL ELECTRIC
VALLEY FORGE SPACE CENTER
P.O. BOX 8555
PHILADELPHIA, PA. 19101

TABLE OF CONTENTS

1.0 INTRODUCTION 1

2.0 SUMMARY AND CONCLUSIONS 6

3.0 CHARACTERIZATION OF EXPERIMENTS 8

4.0 BOUNDARY SENSORS 23

5.0 END-TO-END PROCESSING REQUIREMENTS 35

SUMMARIES:

ADVANCED TECHNOLOGY SCANNER 39

INFRARED SPECTROMETER 44

CIMATS 49

MICROWAVE RADIOMETER/SCATTEROMETER 54

ELECTRON ACCELERATOR 59

OPTICAL BAND IMAGE AND PHOTOMETER SYSTEM 63

6.0 GROUPING OF EXPERIMENTS 69

APPENDIX A ADVANCED TECHNOLOGY SCANNER

APPENDIX B INFRARED SPECTROMETER

APPENDIX C CIMATS

APPENDIX D MICROWAVE RADIOMETER/ SCATTEROMETER

APPENDIX E ELECTRON ACCELERATOR

APPENDIX F OPTICAL BAND IMAGE AND PHOTOMETER SYSTEM

APPENDIX G TRANSIENT ANALYSIS OF CARDIOPULMONARY FUNCTION

APPENDIX H THE EFFECT OF ZERO-G ON THERMOREGULATION

APPENDIX I RESPIRATORY PHYSIOLOGY DEMONSTRATION-PULMONARY FUNCTION

1.0 INTRODUCTION

The Space Shuttle will accommodate 10,000 cubic feet of experiments and will fly on the average of 25 times per year. Typical payloads will collect on the order of 10^{11} bits per day. The success of the STS missions requires that this data be handled and processed on a "routine" basis.

The OEDSF is a key step to the accomplishment of this requirement. The Onboard Experiment Data Support Facility (OEDSF) will provide data processing support to various experiment payloads on board the Shuttle. The OEDSF study will define the conceptual design and generate specifications for an OEDSF which will meet the following objectives:

1. Provide a cost-effective approach to end-to-end processing requirements. The facility must provide a solution to the ever increasing costs of present ground system processing facilities within the context that flight hardware is inherently more expensive than ground hardware. It must be derived from a systems analysis of the end-to-end processing requirements and exploit the unique opportunities afforded by onboard processing and by the application of new technologies. These opportunities include adaptive control of sensors which collect the data; preprocessing of data using real-time available information such as ephemerides, spacecraft attitude and look angle, and atmospheric conditions as defined by auxiliary sensors; and the rejection of bad or uselsss data.

2. Service Multiple Disciplines. The design of the facility must consider the data gathering devices and the data processing requirements of the several disciplines which will utilize the STS. Since most shuttle flights will be interdisciplinary, the concept must be able to accommodate various mixes of these instruments and disciplines on the Space Shuttle.

3. Satisfy User Needs. The data should be immediately useful to the investigator. This implies a wide range of requirements corresponding to the spectrum of the user community. These range from those users who desire totally extracted information, to basic experimenters who need all pertinent data collected. The common thread linking all users is the set of criteria by which we evaluate all data: quality, timeliness, and cost.

ORIGINAL PAGE IS
OF POOR QUALITY

ORIGINAL PAGE IS
OF POOR QUALITY

4. Reduce the amount and improve the quality of data collected, stored and processed. The facility must help prevent bad or useless data from being collected and stored and reduce the amount of extraneous data which normally accompanies the useful portion of the collected data. It must provide for annotation and other useful formatting of the data.

5. Embody growth capacity. The facility will be capable of accommodating additional sensor groups derived from other disciplines, advances in the state of the art (second generation sensors) and expanding mission requirements. The facility will also be able to readily expand its own capabilities by providing for the accommodation of advances in technology pertinent to the facility's functions. This objective indicates a modular approach to the design of the facility.

This study is divided into three major tasks which are further divided into subtasks as described below. This report describes the effort performed in Task 1.

TASK 1: Definition and Modeling of Classical Data Processing Requirements

Task 1 defines the processing requirements for logical groups of experiments and is divided into two subtasks.

Subtask 1.1 - identifies, tabulates, and characterizes experiments which are candidates for STS missions. Based on these characterizations, "boundary" experiments are selected and their end-to-end data processing requirements defined. "Boundary" experiments are defined as those which impose demands on the system of such magnitude that their resolution will also satisfy the demands of many experiments whose requirements fall within the envelope defined by the boundary experiment.

Subtask 1.2 - is the combining of the boundary experiments into logical groups to permit viewing the OEDSF as an integrated system, and the definition of the groups' processing requirements. The results of this subtask is the end-to-end processing requirements for groups of experiments.

The output of Task 1 specifies the end-to-end processing requirements for groups of experiments which represent boundaries or such requirements.

TASK 2: Definition of Onboard Processing Requirements

Task 2 defines the onboard processing requirements for the grouped sensors and is partitioned into three subtasks.

Subtask 2.1 - accepts as input the definition of mission-oriented groups of sensors and their end-to-end processing requirements. An end-to-end functional flow diagram is generated using functional blocks to show the processing steps necessary to convert raw sensor data into usable information. Each block is studied to determine its potential for application of new techniques and processing alternatives; the results are stated in terms of algorithms and procedures. To a first-level approximation, the computation and storage requirements are also estimated to provide the basic tradeoff materials.

Subtask 2.2 - is essentially the rational choice of the space/ground partition line on the functional flow diagram produced in Subtask 2.1. It is an iterative decision based on system-level tradeoffs, modeling of the costs and performance of implementing each functional block on the ground or in space and the iterative feedback from Task 3 and Subtask 2.3. The major output of Subtask 2.2 is the definition of the processing requirements for the onboard portion of the total processing system. The Onboard Experiment Data Support Facility is defined in terms of architecture, processing requirements in terms of data and throughput rates, and identification of compatible processing techniques and equipment.

Subtask 2.3 - evaluates the effectiveness of a processing system. The effectiveness evaluation are used primarily to enhance the feedback from Task 3 in order to make better space/ground partition decisions in Subtask 2.2.

ORIGINAL PAGE IS
OF POOR QUALITY

Another benefit of Subtask 2.3 is the early identification of critical factors which might become flexibility or growth-limiting.

The output of Task 2 is the set of requirements for the Onboard Experiment Data Support Facility, the identification of the facility's architecture, and an evaluation of the total system.

TASK 3: Conceptual Design and Specification for an Onboard Processor

Task 3 produces the conceptual design and specifications for the Onboard Experiment Support Facility, and the evaluation of the facility in terms of the objectives. It is divided into three subtasks.

Subtask 3.1 - refines the system architecture derived in Task 2 and defines the detailed OEDSF architecture. To whatever extent necessary the results of Subtask 3.1 is fed back to Task 2 to modify and enhance the end-to-end system synthesis.

Subtask 3.2 uses the outputs of Subtask 3.1 to transform the architectural concept into a well defined processor design and specification. An initial point design is generated. The refinement of this point design and the definition of a second continue throughout the subtask. Critical components are identified, design tradeoffs are performed and resolved. The results of Subtask 3.2 is fed back to Subtask 3.1 and Task 2 for iteration toward an optimal overall design.

Subtask 3.3 - performs in-depth analyses of the processor point designs produced over the duration of the Task 3 effort. These analyses begin after a processor has been sufficiently designed and specified in Subtask 3.2. They either serve as documentation that a given processor point design meets all the objectives (including those of growth capability, flexibility

and cost-effectiveness) or point out in a constructive manner where the design should be enhanced.

The output of Task 3 is the conceptual design and specification for the OEDSF.

2.0 SUMMARY AND CONCLUSIONS

The major efforts in task 1 were the tabulation of candidate boundary experiments and the determination of processing requirements for the selected boundary experiments. The experiments considered were selected from the disciplines of applications, physical sciences, and life sciences. Sixty applications experiment were reviewed, of which thirty were tabulated and characterized. Fifty physical sciences experiments were reviewed, of which twent-one were tabulated and characterized. Twenty-six life science experiments were tabulated and characterized. The boundary experiments selected were:

Application: Advanced Technology Scanner (ATS)
Infrared Spectrometer (IRS)
Correlation Interferometer Measurement of Atmospheric Trace Species (CIMATS)

Physical Sciences:
Electron Accelerator
Optical Band Image and Photometer System
Microwave Radiometer/Scatterometer

Life Sciences: Pulmonary Function
Effects of Zero-G on Thermal Regulation
Transient Analysis of Cardio-Pulmonary Function

The effort in defining the processing requirements for the Life Sciences Experiments was halted when it was discovered that the Life Sciences Directorate at NASA JSC is developing a program for onboard computer processing of these experiments.

The other six experiments were defined to the depth necessary to perform the subsequent tasks in the study.

A problem in this accomplishment was caused by the fact that most experiment are still in an early stage of development and their data processing requirements

have not yet been defined by the experimenters. Further, many experiments provide an instrument which may be used in many different modes to measure various phenomena, frequently in conjunction with other undefined instruments. This impediment was minimized by references to precursor experiments similar in nature and objectives and coordination with the experimenters.

The data processing requirements derived for the selected experiments cover a wide spectrum of needs which range from high data rates, complex processing, to opportunities for significant data reduction by editing techniques.

3. CHARACTERIZATION OF EXPERIMENTS

The methodology of the study depends upon point designs performed on selected boundary experiments. These experiments are selected from tabulations of candidate experiments which are described only to the extent needed to establish comparative complexity in their data and their processing requirements.

The experiments characterized were selected from sets which appeared sufficiently developed so that their data processing requirements might be defined. Table 3-1 characterizes the experiments associated with physical sciences. Table 3-2 shows the experiments associated with applications. Table 3-3 shows life sciences experiments.

The major sources of information for these characterization charts were:

Space Transportation System Payload Data and Analysis (STSPDA)
SEOPS Sensor Characterization Charts
AMPS Experiments Preliminary Descriptions
Shuttle Spacelab Mission Simulation Experiment Requirements & Criteria

Additional data was obtained from several other documents and personnel familiar either with the proposed experiment or with a non-spacelab version (such as a Nimbus experiment) extrapolated to include its spacelab version requirements.

The characterization parameters were selected to provide information matching that required by the boundary selection criteria. These parameters and their significance to this task are discussed below.

The Science Data is the primary output from the instrument. Its form and rate are significant parameters in determining the demands of the instrument

on the system. Relatively modest analog outputs can become driving data rate functions when converted to digital format with multiplicative factors of 16 and up (sampling rate and 8-bit words).

The Measurement Period enables calculation of the total data collected and determines the storage requirements. The duty cycle also determines the time available for possible batch processing.

The Ancillary Data Requirement is indicative of the onboard preprocessing or multiplexing potential.

Onboard Displays frequently require some form of processing to enable interpretation of the information. The type of onboard display indicates the potential for and extent of onboard processing requirements.

Interaction With Other Instruments is significant in determining the extent of processing required on the data of either or both instruments to enable the interaction. It is also useful in determining the group processing requirements if the interaction is with one or more other boundary instruments.

The Data Processing Requirements column is intended to indicate the complexity of the processing required. Knowledge of the specific process needed is not vital at this level.

Objective or End Product establishes a relationship between the raw instrument output and the final output, providing an additional measure of the complexity and extent of the end-to-end processing requirements.

TABLE 3-1

CHARACTERIZATION OF PHYSICAL SCIENCES EXPERIMENTS

Experiment	Science Data Form	Science Data Rate	Measurement Period	Ancillary Data Required	On-Board Displays Required	Interaction With Other Instruments Possible (P) or Req'd (R)	Data Processing Requirements	Objective or End Product	Unusual Requirements and Comments
#1 Fabry-Perot Interferometer	D	100 BPS	2-3 Min. per measurement in limb-scanning mode; determined by other systems when auxiliary.	Ephemeris data. Relative pointing angle. Detector temp.	Digital display for crew eval. of instrum. status.	Operated in conjunction with laser sounder, air glow spectrograph, & gas release modules, as well as independently.	Basic output is intensity vs. wavelength. Comparison with large data bank or tables is nec. for further processing.	Spectral analysis of atmos. emission lines & bands determine atmos. temps., composition, winds.	Instrument pointing error <0.1°
#2 Laser Sounder	N/A		Pulse mode at 1 pulse per sec. at 1 msec duration. Ea. pulse yields 100-200 samples for receiving instruments.	Ephemeris data. Relative pointing angle. Emitted pulse time & power. Laser head temp.	Digital display for crew evaluation of instrument status	Used in conjunction with other detectors (R).	N/A	No scientific data	Must be aligned with other instruments. An emitting instrument without return collection capability.
#3 Airglow Spectrograph	Film	Variable	Exposure time 1-1000 secs; approx. 700 total exposures at irregular times	Ephemeris data. Relative pointing angle. Exposure start & stop times.	Digital display for crew evaluation of instrument status	Interaction with Fabry-Perot interferometer (P)	Data is on film	Spectrographs for use in obtaining concentrations, temp., etc. of atmos. species as fcn of altitude, time, etc.	
#4 Gas Release Module	D, A	~60 KBPS	Instrument in sunlight only.	Ephemeris data. Spacecraft attitude.	CRT display for crew eval. of instrument status.	Interaction with Fabry-Perot interferometer (P).	Data obtained by Monochrometer. Output consists of intensity vs. wvlngth & time Rates are obtained by analyzing spectrum as function of time.	Amounts & rates of solar excitation & ionization of gas species, etc.	S/C A/D was assumed for analog.
#5 Electron accelerator	A D	10 Mhz 2.5 KBPS	Maximum of 4 hrs. per day.	Ephemeris data. Attitude of spacecraft and accelerator.	CRT display of var. parameters includ. pulse shapes; some must be stored as science data	Used with gas plume release exp. TV & spectroradiometric instruments, ion probes, etc. (R)	Requires correlation of a large number interacting parameters which makes process. diffic. Requires analysis & real time display of short pulse shapes (~100 ns)	Map of earth's mag. field lines; meas. electric field in ionosphere	

ORIGINAL PAGE IS OF POOR QUALITY

Table 3-1 (cont'd)

Experiment	Science Data Form	Science Data Rate	Measurement Period	Ancillary Data Required	On-Board Displays Required	Interaction With Other Instruments Possible (P) or Req'd (R)	Data Processing Requirements	Objective or End Product	Unusual Requirements and Comments
#6 Gas Plume Release	TV	4.5 Mhz	Maximum of 4 hrs. per day, concurrent with accelerator operation.	N/A	Replay of several secs of TV from video tape.	Operates in conjunction with electron & ion accelerators	Little processing req'd. Data consists of optical observations of plume release.	Video tape of gas release.	Controls of accelerators must be coordinated with gas release & video taping.
#7 Pyrohelio-meter & Spectrophotometer	D	3 20 BPS	2 or 3 scans per daylight half-orbit. 10 minutes per scan.	Pointing angle relative to the sun. Temperature and ephemeris data.	Lights to show when various controls are activated.	Simultaneous measurement of earth's albedo with second instrument (P). Boresight with sun-tracker (R).	Simple correlation between instruments & with ancillary data. Low level processing requirements.	Value of solar constant and solar spectral irradiance.	
#8 Optical band image & photometer system	TV 2 units D Photo meter	4 Mhz each 40 KBPS	Determined by phenomena to be measured.	Ephemeris data; attitude to 0.02°; time of middle of TV picture to .003 sec.	One video TV monitor & various indicator lights	None (R)	Basic output is intensity at at preselected wavelengths. Quantity & mix of data types present a data mgmt. problem.	Monochromatic images of faint natural phenomena, e.g., auroras (natural & artificial), glows, etc.	Direction of photometers controlled by crew, based on TV images.
#9 Infrared Interferometer	D	1000 BPS	3 minutes per data take; up to 3 data takes during a given orbit.	Ephemeris data; pointing of instrument with acc. ≥ 0.1°.	TBD	None (R)	Basic output is intensity vs. wavelength. Requires calibration data to correct meas.	Special analysis at IR wavelengths (Specific use TBD)	
#10 Limb Scanning Infrared Radiometer	D	12 KBPS	Operates from dark side of the terminator; one data take may be up to 5 min.	Ephemeris data. Relative pointing angle. Detector temp.	Display for crew evaluation of instrument status & data from 4-12 spectral chs.	None (R)	Basic output is intensity vs. wvlgth. Req. calibr. data. Spectrum compared with kwn. spectra to ident. trace gases.	Measurement of trace species at altitudes up to 120 Km.	
#11 Magneto-plasma-dynamic (MPD) arc (Level I Diagnostics)	A	1 Mhz	Approx. 4 hours per day	Ephemeris data, Ambient plasma densities	CRT display of pulse wave forms & several housekeep. parameters	Operates with mass spectrometers, ion mass analyzers, TV, etc. MPD arc is a subsystem of particle accel. system	Many interacting inputs. Requires subtract. of extraneous fields which may involve complex algorithms. Real time data display req'd.	Map of earth's magnetic field lines. Effect of perturbing ionosphere conductivity & generation of plasma waves.	Requires rapid digitization of pulse wave forms.

ORIGINAL PAGE IS OF POOR QUALITY

TABLE 3-1 (cont'd)

Experiment	Science Data Form	Science Data Rate	Measurement Period	Ancillary Data Required	On-Board Displays Required	Interaction With Other Instruments Possible (P) or Req'd (R)	Data Processing Requirements	Objective or End Product	Unusual Requirements and Comments
#12 Triaxial Flux Gate	D	600 BPS	Not Available	Ephemeris Data. Instrument temperature. Spacecraft attitude.	Display of mag. field vector, wave propagation vector & polarization	Combined useage with DC electric fields inst., ULF wave fields measurements (P)	Requires extraction of vehicle mag. fields & real time data display. Complexity similar to MPD arc above.	Measurement of natural hydromagnetic wave propagation in ionosphere & ULF noise generated by orbiter.	
#13 Ultraviolet Occultation Spectrograph	Film	~20 Exp. per. meas.	Data taken only during the occultation of the sun or a bright star. 10-20 one second exposures.	Ephemeris data. Relative pointing angle. Exposure time.	Display for instrument status.	None	Data is on film.	Measurement of molecular specie concentration & solar spectrum (300-2000Å)	
#14 UV Visible NIR Spectrometer	D	400 BPS	5 minutes per data take	Ephemeris data. Relative pointing angle. Scan rate. Wavelength selection.	CRT display of detector output during data take & instrument status.	Operation in concert with laser sounder & gas release instruments (P)	Output intensity is analyzed to ident. absorp. bands Compar. with data bank to identify emissions	Spectrophotometric meas. of atmospheric & ionospheric emissions from 300-10,000Å	In-flight calibrations using internal sources.
#15 Faraday Cup. Retarding Potential Analyzer. Cold Plasma probe. (Level II Diagnostics)	A	~10 Mhz	Approx. 4 hours per day. Same time line as the accelerators.	Ambient plasma densities.	Display of pulse shape signals in near real time.	Used for accelerator beam diagnosis (R).	Many interacting inputs. Requires subtract. of extraneous fields which may require complex algorithms. Real time data display req'd.	Determination of current densities & part. acceleration energies in the electron & ion beams.	Requires fast A/D converters, memory & reconversion to analog for CRT display.
#16 IR Radiometer	D	10 KBPS	TBD	Ephemeris Data. Relative pointing angle. Detector temp. Scan rate.	Digital display for crew evaluation of instrument status.	None (R)	Output radiance values must be corrected using calibration tables.	Thermal balance; IR oxygen emission.	
#17 XUV Normal Incidence Spectrometer	D	5 KBPS	TBD	Ephemeris Data. Relative pointing angle. Spacecraft attitude.	Digital display for crew evaluation of instrument status.	None (R)	Output intensities are analyzed as a fcn. of wavelength to ident. characteristic absorption bands.	Identify constituents and energy of the ionosphere.	

ORIGINAL PAGE IS OF POOR QUALITY

TABLE 3-1 (cont'd)

Experiment	Science Data Form	Science Data Rate	Measurement Period	Ancillary Data Required	On-Board Displays Required	Interaction With Other Instruments Possible (P) or Req'd (R)	Data Processing Requirements	Objective or End Product	Unusual Requirements and Comments
#18 Narrow Band Filter Photometer	D	1000 BPS	TBD	Ephemeris data. Relative pointing angle. Spacecraft attitude.	Display of instrument output may be desired along with instrument status.	None (R)	Meas. intensities analyzed as fcn. of wavelength. after correc. for instrument response.	Study neutral density, aerosols, ozone, O_2, day and night air-glow.	
#19 High Resolution Fourier SWIR Spectrometers	D	TBD	TBD	Ephemeris data. Relative pointing angle. Detector temp.	Digital display of instrument status.	None (R)	Sensor output must be convoluted using Fourier transforms to obtain intensity vs. wavelength.	Identify constituents and distribution of both ions & neutral excited OH, O_3 & NO (1 - 5 μm).	
#20 Cryogenic Fourier Spectrometer	D	TBD	TBD	Ephemeris data. Relative pointing angle. Detector temp.	Digital display of instrument status.	None (R)	Sensor output must be convoluted using Fourier transforms to obtain intensity vs. wavelength.	Identify constituents & distribution of both ions & neutral excited OH, O_3 & NO (5-150 μm).	
#21 Microwave Radiometer/ Scatterometer	D	5-33 KBPS	Variable	Ephemeris data. Spacecraft attitude and relative pointing angle. Antenna temperature.	Digital display or print-out of selected house-keeping parameters.	None (R)	Backscatter cross-sections must be calculated and processed to derive wind-speed parameters.	Wave heights and surface temperature distribution for oceanology. Water content of atmosphere.	

ORIGINAL PAGE IS
OF POOR QUALITY

TABLE 3-2

CHARACTERIZATION OF APPLICATION EXPERIMENTS

Experiment	Science Data Form	Science Data Rate	Measurement Period	Ancillary Data Required	On-Board Displays Required	Interaction With Other Instruments Possible (P) or Req'd (R)	Data Processing Requirements	Objective or End Product	Unusual Requirements and Comments
#1 Modular Synthetic Aperture Radar (SAR)	A F	2.5 MHz 30 ft. per orbit	10 minutes per orbit	Ephemeris & attitude data at a rate of 10 readings/sec.	Display for evaluation of instrument status.	None (R)	Inverse Fourier transforms req'd to convert film imagery of interference patterns to spatial imag.	Radar images of earth's surface.	24 channels of telemetry. Storage: 10^7 bits per orbit.
#2 Multispectral Scanner	D	21.35 MBPS	TBD	Ephemeris data. Relative pointing angle. Scan rate.	Display for evaluation of instrument status.	None (R)	Very complex decommutation processing, including tape track alignm't.	Provide multispectral imaging for land resource management.	15 KBPS Housekeeping data.
#3 High Resolution Ozone Mapper (Hadamard Imaging Sensor)	D	1.0 KBPS	20 minutes per orbit.	Latitude & longitude for each pixel. Scan rate.	Quick look data display is possible requirement. Display for evaluation of instrument status.	None (R)	Requires inversions to recover both spectral & spatial information.	Contour maps of ozone concentration for each altitude.	Recording of 10^6 bits per orbit.
#4 Active Microwave Radiometer/ Scatterometer	D	1.07 KBPS	TBD	Ephemeris data. Relative pointing angle. Antenna temperature.	Display for evaluation of instrument status.	None (R)	Requires skew removal, decommutation, calculation of antenna temp. & backscatter coefficient & reduction of calibration data.	CCT & tabulations of backscatter coefficients; plots.	Redundant recording on 28 track recorder. Variety of operating modes.
#5 Infrared Spectrometer (EREP)	D	41.4 KBPS	Variable manually controlled	Ephemeris data. Scan rate and relative pointing angle. Detector temperature.	Display for evaluation of instrument status.	None (R)	Requires calibration reduction & radiance conversion. Requires calibra. data, tables of wavelength response.	Plots and tabulations of calibrated radiance levels of observed geographic features.	7 KBPS housekeeping 7 KBPS frame sync.
#6 Infrared Temperature Profile Radiometer (ITPR)	D	175 BPS	TBD	Ephemeris data. Scan rate and relative pointing angle. Detector temperature.	Display for evaluation of instrument status.	Reduced data may serve as input to other instruments (P).	Reduce calibration data & apply to meas. intensities. Reduce intensities to temp. profiles.	Geographic distribution of temperature/ altitude profiles.	Candidate for total on-board data reduction.

TABLE 3-2 (cont'd)

Experiment	Science Data Form	Science Data Rate	Measurement Period	Ancillary Data Required	On-Board Displays Required	Interaction With Other Instruments Possible (P) or Req'd (R)	Data Processing Requirements	Objective or End Product	Unusual Requirements and Comments
#7 Modular Scanning Radiometer	D	120 MBPS	2 Hours per day	Ephemeris data. Scan rate and relative pointing angle.	Display for evaluation of instrument status.	None (R)	Reformating, decommutating, calibration reduction, radiance & geometric conversion & correction.	Radiometric intensity scans; specific utilization dependent on mission.	Housekeeping and ancillary data is multiplexed into data stream.
#8 Multispectral photographic facility (S-190A)	D	8.192 KBPS	TBD	Ephemeris data. Exposure time. Aperture setting.	Display for evaluation of instrument status.	None (R)	Time correlation to camera shutter.	High resolution multispectral maps of earth.	
#9 Infrared Spectrometer (IRS)	D	3.4 KBPS	TBD	Ephemeris data. Relative pointing angle. Detector temperature.	Display for evaluation of instrument status.	Temp. profile may serve as input for other sensors (P)	Output consists of intensity vs. wavelength. Requires data tables for calibration. H_2O content determined by analyzing absorption lines in the spectrum.	Vertical temp. profile & H_2O distribution.	
#10 Automatic Picture Taking (APT)	Video		Daytime	Ephemeris data. Pointing angle. Timing information.	Quick look data display possible.	Input to other instruments (P)	Output is video; little processing required.	Local cloud cover images.	Slow readout (200 seconds); stored image vidicon.
#11 Temp./Humidity Infrared Radiometer (THIR)	Video	360 Hz	TBD	Ephemeris data. Scan rate. Pointing angle.	Quick look data display possible.	Input to other instruments (P)	Video output requires little processing.	Cloud cover water vapor mapping.	
#12 Earth Radiation Budget (ERB)	D	50 BPS	TBD	Ephemeris data. Scan rate and relative look angle. Sun angle to $\pm 0.2^{\circ}$.	Display for evaluation of instrument status.	None (R)	Output consists of intensity vs. wavelength. Requires calibra. data tables for correction of meas. values. Also requires correction for cloud cover.	Planetary heat budget; solar radiation & earth flux.	Requires knowledge of Sun angle to ± 0.2 deg.

ORIGINAL PAGE IS OF POOR QUALITY

TABLE 3-2 (cont'd)

Experiment	Science Data Form	Science Data Rate	Measurement Period	Ancillary Data Required	On-Board Displays Required	Interaction With Other Instruments Possible (P) or Req'd (R)	Data Processing Requirements	Objective or End Product	Unusual Requirements and Comments
#13 Medium Resolution Infrared Radiometer (MRIR)	D	2 KBPS	TBD	Ephemeris data. Relative pointing angle. Scan rate.	Display for evaluation of instrument status.	Input to other instruments (P)	Output consists of intensity vs. wavelength. Requires calibra. data tables. Distrib. of atmos. gases requires analyzing absorption lines in spectrum.	Vertical temp. profile, heat balance, dist. of atmos. gases.	
#14 Advanced Technology Scanner (ATS)	D	90 MBPS	TBD	Ephemeris data. Relative pointing angle. Scan rate.	Display for evaluation of instrument status.	None (R)	Requires radiometric & geometric correction. Data compression may be required.	Multispectral image of earth	
#15 Global Survey of Atmospheric Trace Constituents & Pollutants	D	420 Wds/ Sec.	Daytime 2.5 Min/ Spectral Scan	Ephemeris data. Relative pointing angle. Scan rate.	Display for evaluation of instrument status.	None (R)	Fourier transforms req'd to convert interferograms to spectra of trace gases.	Monitor trace gases in atmosphere.	Passive non-imaging experiment.
#16 Correction Interferometer Measurement of Atmospheric Trace Species (CIMATS)	D	1200 BPS	Continuous	Ephemeris data. Pointing angle relative to nadir. Detector temperature.	Display for evaluation of instrument status.	None (R)	Limb inversion calculations; nadir iterative calculations.	Vertical dist. of trace species (CO, CH_4, NH_3, etc.)	Passive non-imaging experiment. Storage: 3-4 MB per orbit.
#17 Infrared Spectrometer (S-191)	PCM	54.72 KBPS	Variable; manually controlled by astronaut.	Ephemeris data. Pointing angle. Detector temperature.	Display for evaluation of instrument status.	None (R)	Output is intensity vs. wavelength. Requires calibration & radiometric correction.	Determine atmospheric calibration data.	Five sensor wavelengths are multiplexed.
#18 Limb Radiance Inversion Radiometer (LRIR)	D	4 KBPS	TBD	Ephemeris data. Scan rate and pointing angle. Detector temp.	Display for evaluation of instrument status.	None (R)	Limb inversion calculations required.	Determine stratospheric profiles of temperature, H_2O & O_3	

3-2 (cont'd)

Experiment	Science Data Form	Science Data Rate	Measurement Period	Ancillary Data Required	On-Board Displays Required	Interaction With Other Instruments Possible (P) or Req'd (R)	Data Processing Requirements	Objective or End Product	Unusual Requirements and Comments
#19 Back-scatter Ultraviolet Spectro-meter (BUV)	D	60 BPS	TBD	Ephemeris data. Relative pointing angle.	Display for evaluation of instrument status.	None (R)	Requires calibra-tion of measured intensities, and log decompres-sion of data.	Spatial dis-tribution of ozone.	
#20 Infrared Interfero-meter Spec-trometer (IRIS)	D	3.8 KBPS	TBD	Ephemeris data. Pointing angle. Detector temperature.	Display for evaluation of instrument status.	None (R)	Inverse Fourier transforms are required.	Vertical temp. profile & dis-tribution of atmos. gases.	
#21 Satellite Infrared Spectro-meter (SIRS)	D	20 BPS	TBD	Ephemeris data. Pointing angle.	Display for evaluation of instrument status	None (R)	Requires correc-tion of measured intensity using calibration tables. Analysis of ab-sorption lines in spectrum to identify gases.	Vertical temp. profile & dis-tribution of atmospheric gases.	
#22 Trop-ical Winds Energy Con-version Ref-erence Level Experiment (TWERLE)	D	500 BPS	TBD	Ephemeris data. Pointing angle. Position and velocity of radiating balloons.	Display for evaluation of instrument status.	None (R)	Solve time variant doppler shift for source position & velocity of radia-ting balloon. Store time & number sequence infor-mation on time, pressure, al-titude & velocity.	Determination of large scale motions; con-version of potential to kinetic energy; Provide 150 mb reference level in southern hemisphere.	Requires random access memory.
#23 Normal Incidence Spectro-graph	D	10 KBPS	Daytime	Ephemeris data. Pointing angle relative to the sun.	Display for evaluation of instrument status.	None (R)	Output is intensity vs. wavelength which must be corrected for detector response as a function of wavelength.	Solar line profile.	Solar pointing.
#24 Grazing Incidence Monochro-meter	D	1 KBPS	Daytime	Ephemeris data. Solar angle.	Display for evaluation of instru. status	None (R)	Same as #23.	Solar line spectrum	Solar pointing.

ORIGINAL PAGE IS OF POOR QUALITY

TABLE 3-2 (cont'd)

Experiment	Science Data Form	Science Data Rate	Measurement Period	Ancillary Data Required	On-Board Displays Required	Interaction With Other Instruments Possible (P) or Req'd (R)	Data Processing Requirements	Objective or End Product	Unusual Requirements and Comments
#25 Very High Resolution Optical Bar Panoramic Camera	Film	TBD	Daytime	Ephemeris data. Scan rate and pointing angle. Timing information.	TBD	None (R)	Data is on film	Detailed cultural studies for tax assessment, project planning and environmental monitoring.	
#26 Wide Field Multispectral Camera	Film	TBD	Daytime	Ephemeris data. Scan rate. Pointing and timing info.	TBD	None (R)	Data is on film	High resolution multispectral mapping for land management use.	
#27 Stratospheric Aerosol Meas. (SAM II)	D	2 BPS	TBD	Ephemeris data. Solar position.	Display for evaluation of instrument status.	None (R)	Requires calibration of Measured intensities and analysis of resulting spectra.	Measurement of tropospheric & stratospheric aerosols.	Spectral radiometers (PIM photodiodes).
#28 Lower Atmospheric Comp. & Temp. Exp. (LACATE)	D	4 KBPS	TBD	Ephemeris data. Pointing angle and scan rate. Detector temperature.	Display for evaluation of instrument status.	None (R)	Requires calibration of measured intensities. Requires analysis of absorption spectrum to identify gases.	Vertical profiles of O_3, NO_2, H_2O, HNO_3, N_2O, CH_4 and aerosols; vertical temperature profiles.	Scanning spectral radiometer
#29 Aerosol Physical Properties Instrument	D	48 KBPS	Daytime	Ephemeris data. Pointing angle and scan rate.	Display for evaluation of instrument status.	None (R)	Limb inversion calculation. Tabulated output.	Vertical distribution of atmospheric aerosols. (Z=10-80 Km)	$2\text{-}3 \times 10^6$ bits/orbit
#30 Fraunhofer Line Discriminator (FLD)	D	TBD	Requires daytime	Ephemeris data. Pointing angle.	Display for evaluation of instrument status.	None (R)	Requires correction of measurements using filter transmission data.	Daytime mapping of luminescence.	Uses solid Fabry-Perot bandpass filters (1/2 Å bandpass)

ORIGINAL PAGE IS
OF POOR QUALITY

TA .3-3

CHARACTERIZATION OF LIFE SCIENCES EXPERIMENTS

Experiment	Science Data Form	Science Data Rate	Measurement Period	Ancillary Data Required	On-Board Displays Required	Inter-action With Other Instru.	Data Processing Requirements	Objective or End Product	Unusual Requirements and Comments
#1 Hemodynamic changes following exposure to weightlessness	A	TBD	Minimum of 30 minutes per day on the 2, 4, and 6th days of the mission. Requires two subjects.	Time coding during experiment	TBD	None	Correlation and interpretation of measured parameters. Comparison with baseline values.	Determine changes in limb blood flow and relative pulse wave velocity/time during orbital mission and their temporal course after the mission.	Experiment has self-contained data acquisition and recording system. Ten parameters will be recorded.
#2 Cardiovascular studies on chronically instrumented animals.	A	TBD	One hour set up, checkout and calibration. 1/2 hour test period 1/2 hour closeout and clean up	TBD	TBD	None	Correlation and interpretation of measured parameters. Comparison with baseline values.	Definition of the extent of changes in the body systems during weightlessness by studying human surrogate.	Ten parameters will be recorded.
#3 Determination of Cardiac Output	D	TBD	Two inflight sessions of length TBD.	TBD	TBD	None	Correlation of data with overall cardiopulmonary physiological evaluations.	To evaluate cardiac output, circulation time, etc. following weightlessness.	Data will be recorded for computer analysis using charts, recorders, computers or tape.
#4 Central and peripheral hemodynamic responses during isometric exercise	A	TBD	30 minutes per day	Time coding	TBD	None	TBD	To evaluate the effect of space flight on cardiovascular responses to isometric exercise.	14 analog magnetic tape channels. All data will be analyzed post flight. Data consists of magnetic tape and crew logs.
#5 Effect of Orbital Fluid Shifts on Cardiovascular dynamics	A	TBD	5 minutes twice daily but more frequently immediately after achieving orbit and after landing	Time coding	TBD	None	TBD	To study central volume loading effects caused by headward fluid shifts.	Only post mission analysis required by already existing computer software. Self contained data acquisition and recording system.
#6 Effect of Zero G Fluid Shifts on the Vector Cardiogram.	A		Similar to above. Six crewmen subjects are required.	Time coding	TBD	None	Analysis and interpretation of vectorcardiograms.	To determine relationship of orbitally induced fluid shifts to vectorcardiographic. Changes observed during Skylab.	Self-contained data acquisition and recording system. Only post mission analysis required by already existing computer software.
#7 Echocardiography	A		TBD	Time coding	Video Display 0.02-100 Hz	None	Analysis and interpretation of echo cardiogram and VCG.	To study changes in dimensions and cardiac mechanical and elec. functions throughout the cardiac cycle.	Videotape recording of echocardiogram, digitization of analog VCG and telemetry to ground in non-real time.

ORIGINAL PAGE IS
OF POOR QUALITY

TABLE 3-3 (cont'd)

Experiment	Science Data Form	Science Data Rate	Measurement Period	Ancillary Data Required	On-Board Displays Required	Interaction With Other Instruments	Data Processing Requirements	Objective or End Product	Unusual Requirements and Comments
#8 Biostereometric Analysis of Body Form	Film		Twice first day, one per day thereafter	Time coding	None Required	None	Analysis of photographs	Use biostereometrics to examine changes in body form resulting from space flight environment.	
#9 Bone and Muscle Mass Changes After Space Flight	N/A		Post-flight	N/A	N/A	None	N/A	Measurement of location & magnitude of changes in musculoskeletal constituents which result from space flight.	Bone mass replacement is measured post-flight using radioactive isotopes.
#10 Pulmonary Blood Flow	TBD	TBD	Bi-hourly on day 1 & daily thereafter. Approx. 35 min. per session. All crewmen will participate.	TBD	TBD	Measurements can be obtained in conjunction with Exper. #13 below.	TBD	Obtain information on the time course & magnitude of changes in central blood flow/volume relationships in Zero-G.	
#11 Respiratory Physiology Demonstration - Pulmonary Function	N/A		Four times during first eight hours of flight & daily thereafter. 5-10 minutes per session. All crewmen will participate.	Time coding	Digital printer or graphics terminal	None	Data management utilizes PDP8 computer in common with other experiments. Sufficient data to make on-board processing desirable.	Objectives: Qualify man for long-duration space flight, examine physiological mechanisms involved as the pulmonary system adapts to weightlessness & then readapts to normal gravity.	
#12 Effect of Zero-G on Thermoregulation	D, A	Low	Approx. 8 hours of data total during the mission, during 12 sessions in the mission.	TBD	Digital display of various parameters	None	Data management utilizes PDP8 computer in common with other experiments.	Assess the effect of Zero-G on the rate of heat transfer from the body.	
#13 Transient Analysis of Cardiopulmonary Function	TBD		All crewmen will participate in daily tests of approx. 35 min. Two crewmen per test.	Time coding	Digital display of various parameters.	Measurements can be obtained in conjunction with the Pulmonary Blood Flow Experiment.	Data management utilizes PDP 8 computer in conjunction with other experiments.	Obtain info on the time course & magnitude of change of sev. cardiopulmon. parameters. Devel. computer analysis methodology compatible with data format of the pul. blood flow...	

ORIGINAL PAGE IS
OF POOR QUALITY

TABLE 3-3 (cont'd)

Experiment	Science Data Form	Science Data Rate	Measurement Period	Ancillary Data Required	On-Board Displays Required	Interaction With Other Instruments	Data Processing Requirements	Objective or End Product	Unusual Requirements and Comments
#14 Vestibular Function	A, Bi-level	TBD	Seven measurements per mission. Approximately 70 minutes per measurement.	Time coding	Video	None	TBD	To use electronystagmography to measure the response of the human vestibular system to variable angular acceleration.	Video observation of the experiment during all station passes. Real time telemetry Return of all recorded data.
#15 Acute responses of fluid & electrolyte metabolism to space flight.	N/A		TBD	None	Display scope & teletype	None	Chemical analysis of blood & urine samples.	Identification of the acute changes in systemic physiolog. factors occurring upon intro. to a Zero-G environment	
#16 Plasma Calcium & Parathyroid Hormone Changes in Weightlessness	N/A		TBD	None	Display scope & teletype	None	Chemical analysis of blood & urine samples	Study of selected factors influential upon calcium balance in early space flight.	Very similar to previous experiment. Computer for on-board analysis to be developed.
#17 Hemopoietic Function of the Bone Marrow	N/A		N/A	N/A	N/A	None	Examination of bone marrow & tissue samples.	Determination of the functional aspects of the hemopoietic processes in bone marrow & related tissues.	Only data consists of specimens returned to the earth and log information.
#18 Study of Skeletal Muscle Function in Space Flight	A	5-400 Hz	Twenty-eight measurements per mission of 10-15 minutes duration each.	Time coding	TBD	None	Post mission digital process. of analog data & power spectral density analysis of digital data. Statistical processing a possibility.	To describe muscle dysfunction characteristics & consequences resulting from space flight disuse.	35 mm stills and 16 mm movie (or TV video) of at least two experiment runs. Real time strip chart recording on ground.
#19 Development of an Animal Model System for Measurement of Perf. Impairment by S/C contaminants & Drug Zero-G combination.	N/A		TBD	Time coding	TBD	None	TBD	To investigate the effects of contaminants & drugs in a zero-G environment, on parameters such as motor capability & perception.	Photographic data required. Experiment consists of various discrimination tasks performed by animals. Details on measurement system TBD.

ORIGINAL PAGE IS OF POOR QUALITY

TABLE 3-3 (cont'd)

Experiment	Science Data Form	Science Data Rate	Measurement Period	Ancillary Data Required	On-Board Displays Required	Interaction With Other Instruments	Data Processing Requirements	Objective or End Product	Unusual Requirements and Comments
#20 Salivary Analysis	N/A		Two times per week with a duration of 15 minutes each.	Time log	None	None	Chemical analysis of saliva samples.	Analysis of salivary fluid collected from subjects in Spacelab mission. To determine problems of collection of parotid saliva.	Saliva specimens will be frozen for later analysis. No data support requirements.
#21 Closed Plant Ecosystems for Spaceflight	N/A		N/A	TBD	None	None	TBD	Evaluation of parameters of plant growth in space.	Experiment consists of a series of growth runs to obtain data such as biomass yield curves under varying conditions.
#22 Effect of Zero-G on muscle-like contractile proteins	TV	TBD	Ten minutes, 3 times per day	TBD	TV	None	TBD	Determine if there is any effect of Zero-G on muscle-like contractile proteins.	Experiment consists of observing specimen with TV camera attached to a microscope.
#23 Effects of Zero-G on the Sporophore formation of edible fungi	Film	Still	One measurement per day of 1 hour each.	TBD	None	None	Analysis of growth rate measurements and photographic film.	Determine zero-G effects on sporophore development & germination.	Requires daily measurement of growth of each sporophore, and still pictures.
#24 Determination of changes in volatile metabolites due to spaceflight	TBD		One measurement per day of 1 hour each.	TBD	TBD	None	Chemical analysis of plasma and urine samples.	Use novel gas-phase analytical systems to determine if there are organic metabolic shifts due to spaceflight	TV picture of strip chart recorder. Analysis of urine or plasma collected in space flight.
#25 Microbial growth characteristics of low-G stabilized water immiscible substrates.	F	Still	Experiment requires 120 hours. Measurements taken every 6 hrs.	TBD	TBD	None	Analysis and microscopic observations of cells & cell structures.	To determine potential of applying low-G to theoretical microbial techniques to establish a microbiological applications program.	Photos are taken for a visual record of the medium. Periodic samples are taken for turbidity & cell count determinations
#26 Specific site sampling in Spacelab for metabolic contam. by in-flt. gas-liquid chromatography	A, D	TBD	One measurement per day of 1 hour each.	TBD	TBD	None	Chemical analysis of contamination samples.	Determine source & cause of cabin atmospheric contaminants in Spacelab.	TV picture of strip chart recorder, and narrative from crew.

4. BOUNDARY EXPERIMENTS

The experiments selected from Tables 3.1 thru 3.3 for further defintion and point design are those experiments designated as "Boundary" experiments.

The criteria for selecting the boundary experiments used to design the OEDSF must reflect the philosophy and methodology of the overall concept. The study objective is to determine the feasibility of designing an on-board data support system which can be utilized by a wide range of sensor types to provide a timely and cost effective approach to the end-to-end data processing problem. The methodology is to first select key experiments and to determine, in detail, the end-to-end processing requirements of each. The design of the OEDSF will then evolve from the detailed requirements of these experiments. However, processing the data from these boundary experiments will require the application of specific algorithms or techniques which may be subsets of more generalized processing functions. By substituting the more general process for the specific requirements it will be possible to not only meet the needs of the chosen boundary experiment but the needs of all experiments whose processing requirements can be grouped under the same generalized processing function. Choosing the boundary experiments is, therefore, a critical step in meeting the overall objectives of the study.

In order to assure the judicious selection of the boundary experiments a set of necessary and sufficient criteria for choosing the experiments must be formulated. The criteria are detailed in the following paragraphs. That they are necessary is obvious in view of the methodology of the study. Their sufficiency can be seen by correlating the OEDSF objectives with the selection criteria as follows:

OEDSF Objectives	Selection Criteria
Service Multiple Disciplines	Representativeness. Overall processing requirements.
Satisfy user needs	Overall processing requirements. On-board processing. Real-time requirements.
Reduce the Amount and Improve Quality of Data Collected, Stored and Processed	Data rates and data storage. Overall processing requirements. On-board processing.
Embody Growth Capacity	Status of experiment development. Overall processing requirements.
Provide a Cost-Effective Approach to End-to-End Processing Requirements	Data rates and data storage. Overall processing requirements. On-board processing.

Obviously, the data from a given experiment must be amenable to on-board processing. An indication of this will be given by the data rate of the experiment together with its overall processing requirements. The data rate will determine if extensive on-board processing is feasible (typically, this will be true for low data rates) or if the total volume of data will be the major problem (requiring data compression or pre-processing). The overall processing requirements will provide a more detailed picture of what types of algorithms are needed and help to identify those which are amenable to on-board processing.

In order to use the specific requirements of a particular experiment as a model for several sensors, the boundary experiment must be representative. The data and associated processing should be typical of that for a broad category of sensors (e.g., interferometer, spectrometers, etc.).

In addition, substantial benefits should be derived from on-board processing of a particular experiment's data. To determine the potential benefits, one must identify those processing functions which are ideally suited to on-board processing (e.g., exploitation of real-time availability of auxiliary data, quality assessment of data, etc.). Obviously, most real-time processing which is required to assess instrument operation or to provide auxiliary data to other experiments can be done most efficiently on-board.

Finally, after considering the data rates, overall processing requirements, representativeness, and on-board and real-time requirements of a potential boundary experiment one must consider the status of the experiment's development. Sufficient information must exist so that point-by-point designs can be developed for the boundary experiments. These specific designs will then serve as inputs for the design of a more general and versatile on-board data support facility consistent with the methodology of the study.

The selection criteria are discussed below:

Criteria for Selection of Boundary Experiments

1. Data Rates and Data Storage: Experiments which represent a large range of data rates should be chosen. Such a selection will provide several boundary points in terms of the data processing which can or must be considered in designing a processing system. For example, instruments with data rates less than 500 KBPS represent experiments for which considerable on-board processing such as formatting, application of calibration data, and partial or complete data reduction can be accomplished. Data rates greater than 50 MBPS, on the other hand, may require the application of various data compression techniques and partial pre-processing to reduce the total accumulated volume of data to a level which can be practically recorded or transmitted.

2. Overall Processing Requirements: The end-to-end processing requirements should involve a level of complexity which will truly benefit from the features offered by on-board processing. When the end-to-end processing requirements of a particular experiment are viewed, it will be apparent that certain processing functions can be performed on-board. Typical candidate processing functions include complex correction techniques, correlation of several parameters, inversions or lengthy iterative calculations. If the end products of the experiment can be obtained more efficiently (i.e., quicker, less cost, etc.) by performing such on-board processing then the experiment will serve as a good boundary experiment.

3. Representativeness: The data and its processing requirements should be characteristic or representative of that from many experiments. By considering the point by point processing requirements of these specific experiments (e.g., radiometric calibration and correction, geometric correction, data quality assessment, etc.) generalized processing algorithms can be designed to handle the boundary experiments as well as all experiments which require the same or similar processing functions. Also, an experiment which by itself or when used in consort with other experiments requires the processing and correlation of several

types of data (e.g., digital, analog, video, etc.) provides the requirements for designing a more versatile data support system.

4. On-Board Processing: An experiment should have the potential for benefiting from on-board processing. One of the prime objectives of the OEDSF is to exploit the real-time availability of ancillary data or the real-time utilization of other instrument data to perform on-board processing which will minimize the amount and diversity of the data which must be transmitted or returned to earth. Such on-board pre-processing or processing of the data should have a significant impact on the end-to-end processing: cost, timeliness, or quality.

5. Real-Time Requirements: Certain experiments require or desire real-time processing either for quick look and evaluation of instrument operation, or to use the data in adjunct experiments. The real-time requirements must be considered as one of the "points" in the point-by-point design of a processing system. While usually not a driving parameter in the overall design, the real-time needs render the experiment a prime candidate for selection if it also meets other boundary criteria.

6. Status of Experiment Development: The experiment should be developed to the state where it is possible to characterize its data output and define its data processing requirements. It will then be possible to do a point-by-point design of a processor for the selected experiments followed by a generalization of the design to be compatible with several experiments having the same basic requirements.

An additional consideration not explicitly stated as a criterion was to obtain a mix of various requirements and technologies, i.e., active, passive, spectral coverage (visual, microwave).

Criteria 6, Status of Experiment Development, became a significant factor in that several experiments, which otherwise were good candidates were not sufficiently defined to provide the processing requirements to the depth needed in the next step. As an example, the AMPS Level II Diagnostics experiments (Faraday Cup, Retardin

Potential Analyzer, Cold Plasma Probe) which satisfies most of the selection criteria (and was originally selected) will not be sufficiently defined for the purpose of this study for at least six months.

The experiments selected as boundary, together with the rationale for their selection are shown in Tables 4-1a and 4-1b and discussed in the following paragraphs. The logical grouping of experiments (Task 1.2) was performed as part of the selection process, i.e., the experiments were selected from established payloads or were attributed to logical payloads. The OBIPS and the Electric Accelerator are parts of the proposed AMPS payload.

The ATS, the IRS, and the CIMATS are candidates for a SEOPS mission, and are grouped as such.

The Microwave Radiometer/Scatterometer (RADSCAT) was selected because of the complexity of processing requirements and to provide a representative of the active microwave instruments family. The RADSCAT could be grouped either with the AMPS payload or with the SEOPS payload. There is presently no microwave instrument assigned to AMPS. Microwave instruments play significant roles in Earth and Ocean Physics, Weather and Climate, Environmental Quality, and Atmospheric Sciences. A typical utilization of a microwave device in an Atmospheric experiment is described in a paper by Lewis J. Allison, et al "Tropical Cyclone Rainfall as Measured by the Nimbus 5 Electrically Scanning Microwave Radiometer" Bulletin American Meteorological Society, Vol. 55, No. 9, September 1974. The RADSCAT also readily fits the SEOPS concept and can be used as an Earth and Ocean Physics Experiment as described in a report by William J. Pierson, et al "The Application of SeaSat-A to Meteorology," The University Institute of Oceanography of the City University of New York for the SPOC group of NESS under grant No. 04-4-158-11.

The life Sciences experiments selected are candidates for the SMS II package and would be performed as a group.

ORIGINAL PAGE IS
OF POOR QUALITY

BOUNDARY EXPERIMENTS

EXPERIMENT	REASON FOR SELECTION	POTENTIAL BENEFITS OF ONBOARD PROCESSING
ADVANCED TECHNOLOGY SCANNER (ATS)	DATA AND PROCESSING IS TYPICAL OF IMAGING VISIBLE/IR SPECTRUM SENSORS. VERY HIGH DATA RATE (90 MBPS). RELATIVELY COMPLEX PROCESSING, SOME OF WHICH IS MORE EFFECTIVELY DONE ON-BOARD.	DATA TOTALLY PREPROCESSED/ CORRECTED. READY FOR INFORMATION EXTRACTION; DATA IMMEDIATELY USEFUL TO RESOURCE MANAGER USER
CORRELATION INTERFEROMETER MEASUREMENTS OF ATMOSPHERIC TRACE SPECIES (CIMATS)	EXAMPLE OF DATA FROM A BROAD CATEGORY OF INTERFEROMETERS. REQUIRES LIMB INVERSION AND ITERATIVE CALCULATIONS. REQUIRES 3-4 MB STORAGE PER ORBIT.	TOTALLY PROCESSED DATA REDUCES STORAGE REQUIREMENTS FROM $> 10^8$ BITS TO TABULATIONS ELIMINATES NEED FOR ANCILLARY DATA AND CORRELATION WITH SCIENCE DATA
INFRARED SPECTROMETER (IRS)	RELATIVELY LOW BIT RATE (3.4 KBPS). PERMITS EXTENSIVE REAL-TIME ON-BOARD PROCESSING. REDUCED DATA CAN BE USED IN REAL-TIME BY OTHER SENSORS AS AUXILIARY CORRECTION DATA.	PREPROCESSING CAN SIGNIFICANTLY REDUCE COMPLEXITY OF GROUND PROCESSING WHICH PRESENTLY UTILIZES LARGE COMPUTERS FOR EXTENDED TIME PERIODS

TABLE 4-1A

ORIGINAL PAGE IS
OF POOR QUALITY

BOUNDARY EXPERIMENTS (CON'D)

EXPERIMENT	REASON FOR SELECTION	POTENTIAL BENEFITS OF ONBOARD PROCESSING
ELECTRON ACCELERATOR	COMPLEX DISPLAY AND STORAGE REQUIREMENTS (ANALYSIS AND CRT DISPLAY OF 100 NS PULSE SHAPES). REQUIRES FAST DIGITIZATION OF ANALOG DATA. REQUIRES INTERACTION WITH OTHER INSTRUMENTS.	ENABLES REAL-TIME CONTROL AND INTERACTION WITH OPERATOR. REDUCTION OF STORAGE OF HIGH DATA RATE AND ANCILLARY DATA.
MICROWAVE RADIOMETER/ SCATTEROMETER (RADSCAT)	PROCESSING REQUIRES COMPLEX UTILIZATION OF ANCILLARY DATA WHICH IS AVAILABLE ON-BOARD IN REAL-TIME. EXPLOITATION OF THIS AVAILABILITY TO CALCULATE RADAR BACKSCATTER CROSS-SECTIONS WILL SIGNIFICANTLY REDUCE THE QUANTITY OF DATA RETURNED TO GROUND AND GREATLY REDUCE THE TIME	ELIMINATION OF LARGE QUANTITIES OF ANCILLARY DATA AND TIME CONSUMING RE-CORRELATION ON GROUND. DATA IMMEDIATELY USEFUL TO EXPERIMENTER.
OPTICAL BAND IMAGE AND PHOTOMETER SYSTEM (OBIPS)	BOTH TV AND DIGITAL DATA AS OUTPUTS. REQUIRES HIGH DEGREE OF CREW INTERFACE (ON-BOARD REAL-TIME TV DISPLAY). HIGHLY ACCURATE ATTITUDE AND TIMING DATA MUST BE CORRELATED WITH SCIENCE DATA BY INSERTION INTO THE VIDEO VIA A CHARACTER GENERATOR (THIS MAY BE A GENERAL REQUIREMENT FOR ALL VIDEO EXPERIMENTS). LARGE PERCENTAGE OF TV DATA CONTAINS NO INFORMATION AND CAN BE EDITED OUT OF MAIN DATA STREAM.	ELIMINATION OF USELESS DATA WHICH MAY CONSTITUTE UP TO 95% OF DATA COLLECTED AT 8MHZ RATE.

TABLE 4-1B

Advanced Technology Scanner (ATS)

The data and processing from the ATS is typical of imaging visible/IR spectrum sensors. The output consists of digital words representing radiance values for specific spectral intervals and geodetic locations. This raw data is "in error", and must have both radiometric and geometric corrections applied. Such corrections can be performed most efficiently on-board by utilizing real-time calibration input parameters. In addition, the very high data rate (~90 MBPS) points out the need for such processing, together with some type of on-board data quality assessment to insure that only useable data is recorded or transmitted for complete analysis.

Infrared Spectrometer (IRS)

Nearly identical versions of the IRS experiment have been flown previously so that its data processing requirements are well defined. Radiance calibration and angular corrections can be performed efficiently on-board utilizing the availability of real-time ancillary data. Analysis of the corrected raw data can be performed on-board to the extent necessary for use by other sensors as auxiliary correction data. The end-to-end processing involves inversion of the radiative transfer equation and evaluation of the iterative solution of the water vapor equation.

Correlation Interferometer Measurements of Atmospheric Trace Species (CIMATS)

The data from the CIMATS experiment is representative of a broad category of interferometers. The low bit rate (~ 3 KBPS) will permit extensive on-board processing. Real-time ancillary data, together with a data bank of correlation functions can be used to perform the necessary corrections on the raw data and carry the required processing to the end product. Processing of the corrected data will require limb inversion and iterative calculations (e.g., solution of 10 equations in 10 unknowns).

Microwave Radiometer/Scatterometer

Processing of the Microwave Radiometer/Scatterometer data requires complex utilization of ancillary data which is available on-board in real-time. Exploitation of this availability to calculate radar backscatter cross-sections will significantly reduce the quantity of data returned to ground and greatly reduce the time required for end-to-end processing. In addition, real-time processing is desired to determine trend analyses of raw data (such as means and standard deviations) to provide a rapid indication of proper instrument operation.

Electron Accelerator

The electron accelerator must be used in consort with various detectors. Consequently, precise timing between the accelerator operation and the detecting instruments is required. Real time data displays and preliminary processing will be needed to select the accelerator program (i.e., pulse duration, pulse repetition rate, beam injection angle, etc.). Capability for storage and recall of pulse shapes of several rapidly varying parameters, which must be correlated in time, will be required. This may necessitate the use of fast digitizers with selectable sampling frequencies of up to 100 MHz.

Optical Band Image and Photometer System (OBIPS)

The experiment consists of three subsystems which have both TV and digital data as outputs. A large percentage of the TV data contains no information and can be edited out of the main data stream, thereby reducing the telemetry or recording requirements. Highly accurate attitude and timing data must be correlated with the science data by insertion into the video via a character generator. Additional housekeeping data is inserted in the vertical interval (i.e., during the vertical retrace). This method of inserting ancillary data into the science data may be a general requirement or desired capability for all video experiments.

Figure 4-1 indicates the satisfaction of the selection criteria by each experiment. A check mark indicates a medium to high value of the criterion. A lack of a check mark is not necessarily a shortcoming. For example, the IRS has a low data rate which is an attribute enabling significant processing on-board. The selected experiments as a group cover the matrix well and individually score high in the two key areas of On-board Processing Potential, and Representativeness.

Figure 4-2 depicts the spread of representativeness displayed by the selected experiments in the categories of data rates, data storage, data processing complexity, and sensor types. The basis of the histograms are the characterized experiments tabulated in Tables 3-1 and 3-2.

	ON BOARD PROC. POT.	REM. TIME ROMTS	OVERALL PROC. ROMTS.	DATA RATE & STORAGE	REPRESENTATIVENESS	STATUS OF EXP. DEV
ATS	✓		✓	✓	✓	✓
CIMATS	✓		✓	✓	✓	✓
IRS	✓	✓	✓		✓	✓
ELECTRON ACCELERATOR	✓	✓			✓	
RADSCAT	✓		✓		✓	✓
OBIPS	✓	✓	✓	✓	✓	

SATISFACTION OF SELECTION CRITERIA
FIGURE 4-1

ORIGINAL PAGE IS OF POOR QUALITY

REPRESENTATIVENESS

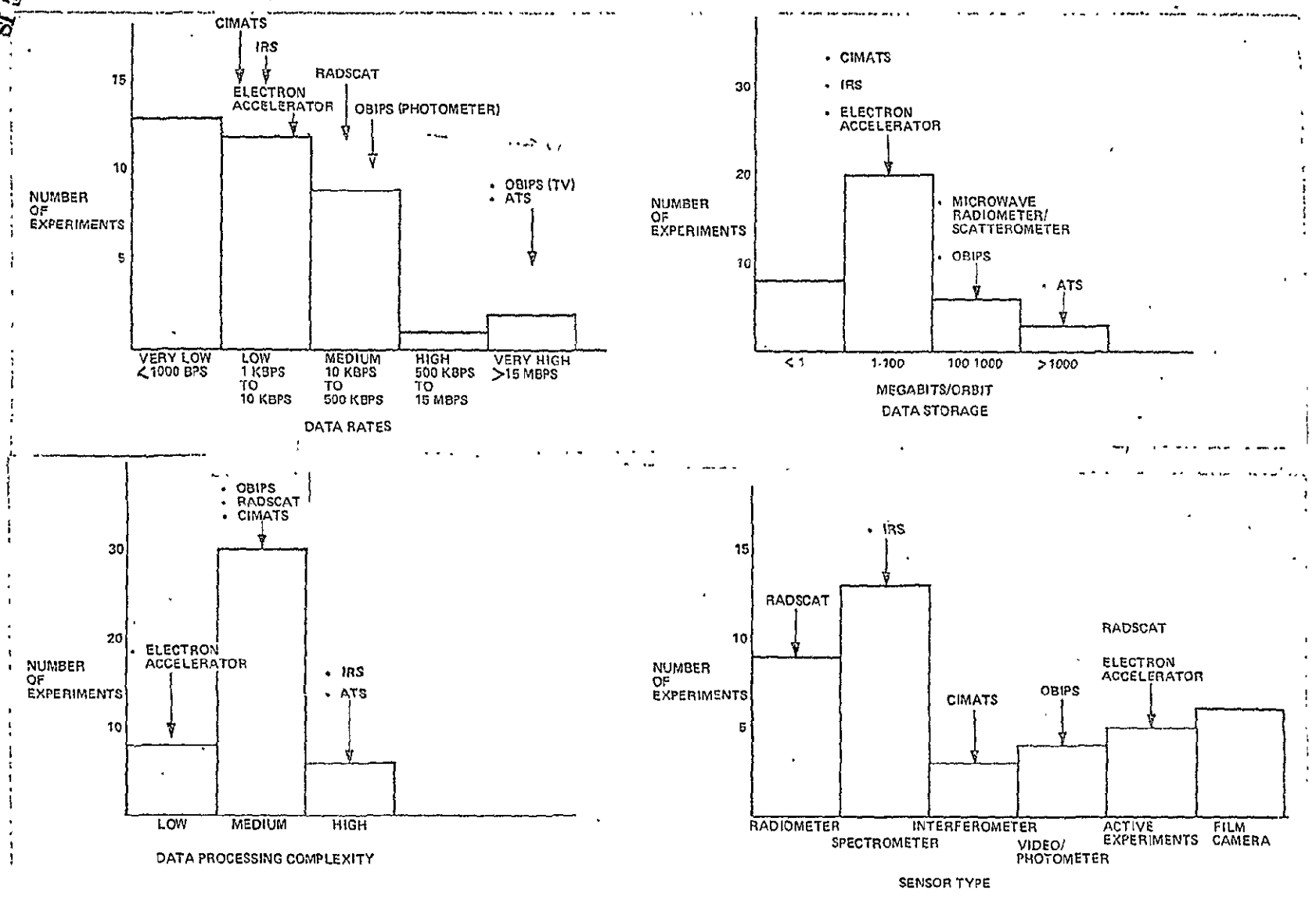

FIGURE 4-2

5.0 END-TO-END PROCESSING REQUIREMENTS

The end-to-end processing requirements for each of the boundary experiments were established in terms of the functions and algorithms required. It must be noted that in all cases the requirements described, and the flows of processes, represent the present approach or the contemplated approach based on present methods; i.e. all processing on the ground.

During this effort, it was discovered that the Life Sciences Directorate at JSC is developing programs for onboard processing by a PDP8 for the biomedical experiments selected. The Life Sciences experiments were eliminated from further definition at this time for the following reasons:

- The effort would be a duplication of the work being performed by the Life Sciences Directorate.
- The data processing capabilities envelope defined by the other six experiments will not be significantly different from that which would be defined with the addition of these three experiments.

None of the selected experiments have been fully developed for their Shuttle application mode. Several experiments have been operated in other configurations either on spacecraft or sounding rockets. The information available on the data processing for these configurations was utilized as the basic input and modified for Shuttle sensors as indicated in conversations with the experimenters.

This section contains the summaries of the Data Processing Requirements and the Data Processing Flow Diagrams for each of the boundary experiments.

Descriptions of the instruments and/or experiments are contained in the appendix section.

Appendix A describes the Advanced Technology Scanner (ATS) and its processing requirements. Information contained therein was obtained from the following sources:

- Standard Earth Observations Package for Shuttle, Final Report (draft), performed under contract NAS 9-14335.
- Earth Observation Satellite System Definition Study, Final Report, performed under contract NAS5-20518.
- Total Earth Resources System for the Shuttle Era (TERSSE), Volume 9, performed under contract NAS 9-13401

Appendix B describes the Infrared Spectrometer (IRS) and its processing requirements. The IRS is identical to the High Resolution Infrared Radiation Sounder (HIRS) experiment on the Nimbus 6 spacecraft. The HIRS is, in turn, an improved Infrared Temperature Profile Radiometer (ITPR) instrument (17 bands versus 7), and its data processing is essentially identical except for the number of channels. Information contained in the summary and in Appendix B was obtained from the following:

- W. L. Smith, "Iterative Solution of the Radiative Transfer Equation for the Temperature and Absorbing Gas Profile of an Atmosphere", Applied Optics, Vol. 9, No. 9, Sept. 1970.
- W.L. Smith, etal, "Retrieval of Atmospheric Temperature Profiles from Satellite Measurements for Dynamical Forecasting", Journal of Applied Meteorology, Volume II, February 1972.
- Section 3 of the Nimbus 6 User's Guide
- Nimbus 5 Sounder Data Processing System
  Part I: Measurement Characteristics and Data Reduction Procedures.
- SEOPS Final Report (draft).
- Communications with Dr. P.G. Abel, NESS, NOAA

Appendix C describes the Correlation Interferometry for the Measurement of Trace

Species (CIMATS) experiment and its data processing requirements. Information contained in the summary and in Appendix C was obtained from the following sources:

- R.N. Granda et al, Carbon Monoxide Pollution Experiment, AIAA paper No. 71-1120.
- Proposal for CIMATS, General Electric Proposal No. N-25002 to Advanced Application Flight Experiment Program including references listed at end of paragraph 5.3.
- Communications with Dr. H. Goldstein, GE.

Appendix D describes the Microwave Radiometer/Scatterometer and its data processing requirements. There is presently no specified active microwave experiment for operation on the Shuttle; the RADSCAT was selected for completeness of boundary conditions. The model RADSCAT chosen and described herein is that which was used on Skylab experiments. The processes for data reduction are generic to this type of instrument and will be only slightly modified if a different utilization is made of the RADSCAT. Information was obtained from the following sources:

- Willard J. Pierson, et al, "The Applications of SEASAT-A to Meteorology".
- NASA Documents PHO-TR524: Earth Resources Production Processing Requirements for EREP Electronics Sensors
- GE Document 76SD4207 Rev D, Vol. 1A: S-193 Microwave Radiometer/Scatterometer/Altimeter Calibration Data Report Flight Hardware; perfromed under contract NAS 9-11195
- Philco Document ERS-100-05: Radiometer/Scatterometer Design Document
- Communications with Dr. F. Jackson and Mr. R. Eisenberg, GE.

Appendix E describes the Electron Accelerator and its data processing requirements. Information contained in the summary and in Appendix E was obtained from the following sources:

- Informal document provided by Mr. G. Flanagan, Code ED5, NASA, JSC

- J. R. Winckler, et al: "Echo 2: A Study of Electron Beams Injected into the High Latitude Ionosphere from a Large Sounding Rocket," Journal of Geophysical Research, Vol. 80, No. 16, June 1, 1975.

- R. W. McEntire, et al: "Electron Echo Experiment 1: Comparison of Observed and Theoretical Motion of Artifically Injected Electrons in the Magnetosphere," Journal of Geophysical Research, Vol 79, No. 16, June 1974.

- R. L. Arnoldy, et al: "Echo 2, Observations at Fort Churchill of a 4-KeV Peak in Low Level Electron Precipitation," Journal of Geophysical Research, Vol. 80, No. 16, June 1975.

- Communications with Dr. J. R. Winckler, University of Minn.

Appendix F describes the Optical Band Imager and Photometer System (OBIPS) and its data processing requirements. The OBIPS is a new instrument which has no heritage. A paper describing this experiment will be published by Dr. T. N. Davis in September 1975. Information contained therein was obtained from the following sources:

- Informal Document provided by Mr. G. Flanagan, Code ED5, NASA-JSC

- Communications with Dr. T. N. Davis, University of Alaska.

Appendices G,H, and I contain copies of the SMS II proposals for the selected Life Sciences Experiments, and the data processing requirements summary. The information contained on the summary sheets following each of these appendices is based on communications with Dr. C. F. Sawin and Dr. E. Moseley, NASA-JSC.

ADVANCED TECHOLOGY SCANNER

Data and Processing

Data Rate & Format:	~ 89 MBPS. 8 bits/word. 3730 words/scan line. Scan position indicators at beginning, midpoint and end of scan (.5 μsec accuracy). Ancillary data is inserted during non-video portion of scan.
Duty Cycle:	Variable - determined by geographic location for which information is desired.
Processing Done by Experiment Electronics:	None.
Ancillary Data Required:	Attitude and rate of attitude change. Timing. Spacecraft ephemeris. Radiometric correction data. Would be desirable to have information on which geographic areas are cloud covered.
Application of Ancillary Data:	Used to perform radiometric and geometric corrections and to correlate images with geographic postion. Cloud cover information would be used to determine time for taking data.
Preprocessing Desired:	Stripping and buffering of timing data, quality assessment indicators, calibration data, ground control point areas and ancillary data.
Algorithms Required for Processing Data:	Radiometric corrections require table look-up of correction coefficients and multiplication of measured values. Geometric correction requires n-th order order polynomial (n typically 4 to 7) to eliminate cross-track errors. Similar correction is required for elimination of along-track errors.

	Must provide correction for scenes where Oblique Mercator projection is required.
	Extractive processing to perform signature analysis and classification requires a processing system similar to the General Electric IMAGE 100.
Processing Time Required:	TBD.
Troubleshooting Aids:	Monitoring of housekeeping parameters.

ADVANCED TECHNOLOGY SCANNER

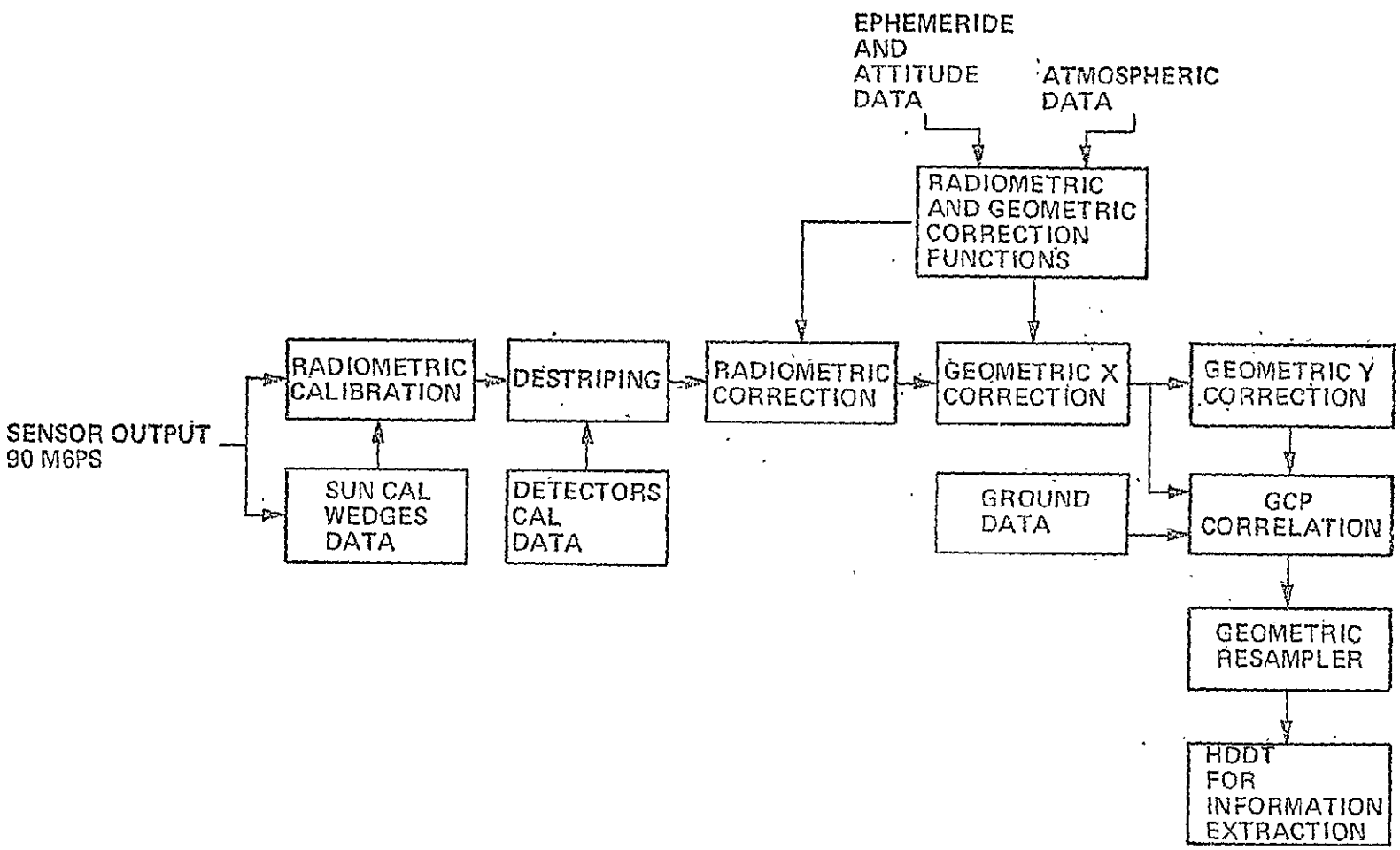

ADVANCED TECHNOLOGY SCANNER COMMAND REQUIREMENTS

Primary Power ON	1
Redundant Power ON	1
Telemetry Power ON	1
Power OFF	1
Focus Forward	1
Focus Reverse	1
Electronic Calibration ON	1
Radiation Calibration ON	1
Calibration OFF	1
Heater Control ON/OFF	2
Bands 1 through 7 Power ON	7
All Bands OFF	1
V/H Setting	1
Bands 1 through 7 Gain Normal	7
Bands 1 through 7 Gain High	7
	34

ADVANCED TECHNOLOGY SCANNER TELEMETRY REQUIREMENTS

DIGITAL TELEMETRY SIGNALS

Primary Power Supply ON/OFF	1
Redundant Power Supply ON/OFF	1
Telemetry Supply ON/OFF	1
Electronic Calibration ON/OFF	1
Radiation Calibration ON/OFF	1
Heater Controller ON/OFF	1
Band 1 to 7 Power ON/OFF	7
Band 1 to 7 Gain NORM/HIGH	7
Focus Limit ON/OFF	1
	21

ANALOG TELEMETRY SIGNALS

Cooler Temperature	2
Structure Temperature Sensors	8
Band 1 to 7 Detector Bias	7
Heater Power	1
Low Voltage Power Supply	8
Input Voltage	1
Miscellaneous	5
	32

INFRARED SPECTROMETER

Data and Processing

Data Rate and Format:	3.39 KBPS 18 bits/word 20 words/scan element 42 active data blocks (one per scan element) 4 secondary data blocks (suring scan mirror retrace)
Duty Cycle:	100%
Processing Done By Experiment Electronics:	Serial A/D conversion of data and storage in data accumulator for subsequent readout.
Ancillary Data Required:	Spacecraft latitude, longitude, altitude.
Application of Ancillary Data:	For use in coordinating data obtained specific geographic location.
Quick Look Processing Required:	To be supplied.
Preprocessing Desired:	Generation of computer compatible tape.
Algorithms Used in Processing Data:	The function for performing the radiance calibration is given by:

$$R(V_i) = \frac{B(\gamma_i, T_{BB})}{V_{BB}(\gamma_i) - V_s(\gamma_i)} \left[V(\gamma_i) - V_S(\gamma_i)\right]$$

where $R(\gamma_i)$ = radiance for channel γ_i corresponding to the output, $V(\gamma_i)$.

The subscripts BB and S refer to blackbody and space values respectively and $B(\gamma_i, T_{BB})$ is the planck radiance corresponding to the blackbody temperature T_{BB}.

Angular correction involves simple multiplication of measured radiance by a constant for each nadir angle and each spectral interval.

Determination of surface temperature estimate requires comparison and averaging of surface brightness temperature measured in two spectral intervals for each element of grid.

Algorithms Used in Processing Data: (Cont'd)

Surface temperature $T(P_S)$ is calculated using:

$$T(P_S) = T_O(P_S) + \left[\frac{\partial T(P_S)}{\partial a(W_S, W_L)}\right]\left[A'_o(W_S, W_L) - A'_o(W_S, W_L)\right]$$

(See NOAA TM NESS 57 for details)

The method of calculating the clear column radiance depends on the observed cloud conditions. (See NOAA TM NESS 57 for details)

The atmospheric temperature profile is obtained from inversion of the radiative transfer equation.

Atmospheric water vapor information is obtained through the iterative solution

$$U^{N+1}(P) = U^{N}(P)\left\{1 + \left[\frac{I(\gamma) - I^{N}(\gamma)}{\int_{0}^{P_S} U^{N}(P)\,\frac{\partial \tau(P)}{\partial U^{N}(P)}\,\frac{\partial B}{\partial P}\,dP}\right]\right.$$

Refer to: Smith, W. L., "Iterative Solution of the Radiative Transfer Equation for Temperature and Absorbing Gas Profiles of an Atmospheric," Applied Optics, Vol. 9, No. 9, Septe. 1970, pp. 1993-1999.

Processing Time Required: To be supplied

Trouble Shooting Aids: Monitoring of selected housekeeping parameters such as temperatures and voltages.

INFRARED SPECTROMETER

DATA PROCESSING FLOW DIAGRAM

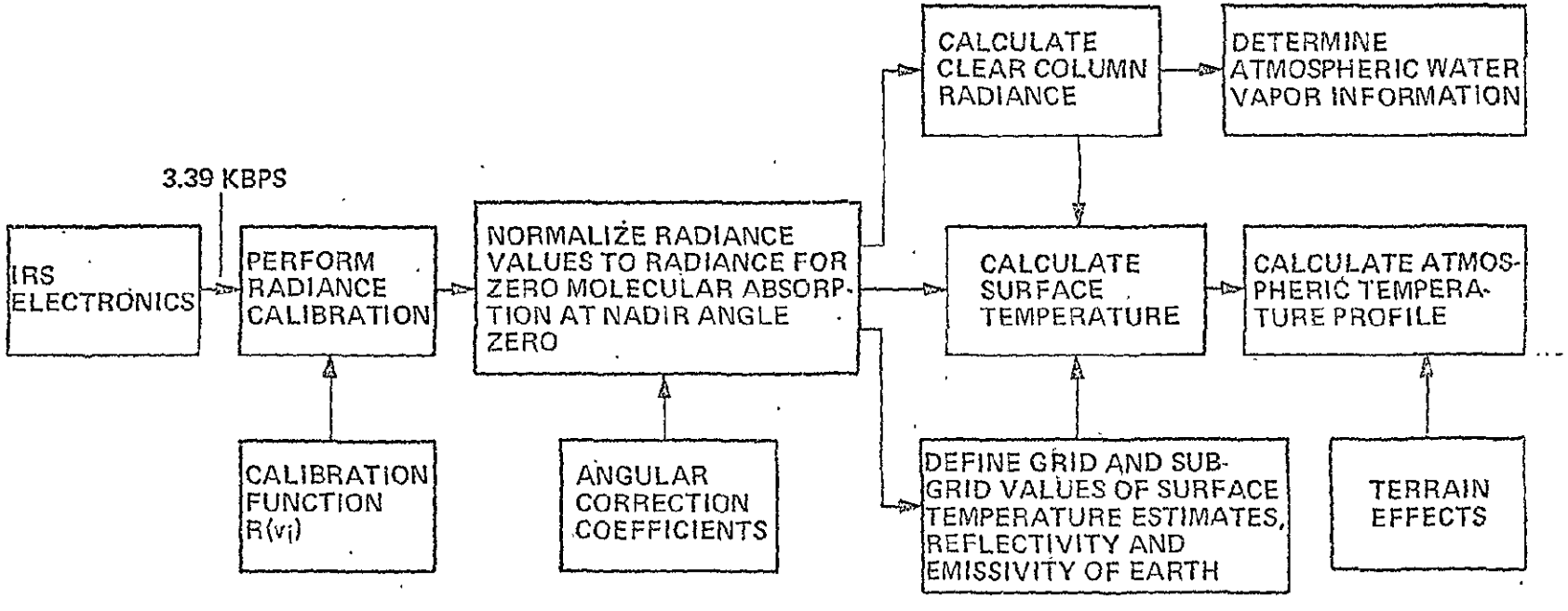

INFRARED SPECTROMETER

Telemetry Requirements

TLM FUNCTION	SIGNAL TYPE	SAMP SEC.
FILTER/CHOPPER MOTOR ON/OFF	DIG B	3/16
SCAN MOTOR ON/OFF	DIG B	3/16
ELECTRONICS ON/OFF	DIG B	3/16
FILTER/CHOPPER MODE NORM/HIGH	DIG B	3/16
COOLER CONE HEATER ON/OFF	DIG B	3/16
SCAN MODE OFF/ON	DIG B	3/16
COOLER COVER ENABLE STOR/DEPLOY	DIG B	3/16
COOLER COVER STOR/DEPLOY	DIG B	3/16
PATCH HEATER ON/OFF	DIG B	3/16
FILTER WHEEL HEATER ON/OFF	DIG B	3/16
PATCH POWER	ALOG	1/16
+15VDC ELECTRONICS POWER	ALOG	1/16
-15VDC ELECTRONICS POWER	ALOG	1/16
+10VDC LOGIC POWER (UNREG)	ALOG	1/16
+5 VDC LOGIC POWER	ALOG	1/16
-15VDC TELEMETRY POWER	ALOG	1/16
DETECTOR BIAS (LWL)	ALOG	1/16
F/C MOTOR CURRENT	ALOG	1/16
SCAN MOTOR CURRENT	ALOG	1/16
COOLER COVER POSITION	ALOG	1/16
SCAN MIRROR TEMPERATURE	ALOG	1/16
PRIMARY TELESCOPE MIRROR TEMP	ALOG	1/16
SECONDARY TELESCOPE MIRROR TEMP	ALOG	1/16
F/C HOUSING TEMP #1	ALOG	1/16
F/C HOUSING TEMP. #2	ALOG	1/16
F/C HOUSING TEMP. #3	ALOG	1/16
F/C HOUSING TEMP. #4	ALOG	1/16
F/C MOTOR TEMP.	ALOG	1/16
RADIANT CONE TEMP.	ALOG	1/16
RADIANT COOLER HOUSING TEMP.	ALOG	1/16
PATCH TEMPERATURE	ALOG	1/16
BASEPLATE TEMPERATURE	ALOG	1/16
ELECTRONICS TEMPERATURE	ALOG	1/16

ORIGINAL PAGE IS
OF POOR QUALITY

INFRARED SPECTROMETER

COMMAND FUNCTIONS

Filter/Chopper Motor ON

Filter/Chopper Motor OFF

Scan Motor ON

Scan Motor OFF

Electronics ON

Electronics OFF

Filter/Chopper Mode High

Filter/Chopper Mode Normal

Cooler Cone Heater ON

Cooler Cone Heater OFF

Cooler Cover Enable, Store

Cooler Cover Enable, Deploy

Cooler Cover Store

Cooler Cover Deploy

Patch Heater ON

Patch Heater OFF

Filter Wheel Heater ON

Filter Wheel Heater OFF

Scan Mode OFF

Scan Mode ON

CIMATS

DATA AND PROCESSING

Data Rate & Format:	2904 bits/sec. 12 bits/word, 242 words/frame 10 words housekeeping followed by 232 words science data.
Duty Cycle:	100%
Processing Done By Experiment Electronics:	None
Ancillary Data Required:	S/C position and attitude for all spectral band measurements. S/C location relative to Sun for non-thermal IR band and for both limb measurement bands.
Application of Ancillary Data:	Position and attitude used to determine location of nadir measurements. Location relative to Sun used for air mass calculations for non-thermal IR band and for both limb measurements.
Quick Look Processing Required:	Printout of housekeeping parameters for use in interpreting and correcting instrument behavior.
Preprocessing Desired:	Computer compatible tape of data.
Algorithms Required For Processing Data:	Multiplication of measured values by predetermined correlation functions for each of ten spectral bands. Involves multiplication of two 16 bit numbers to 16 bit accuracy. Perform air mass calculations for non-thermal IR and for limb measurements (simple multiplication)

Algorithms Required For Processing Data: (Cont'd)	Invert limb measurements to get altitude profile from column density. Solution of 10 linear equation . in 10 unknowns.
Processing Time Required:	Less than 1 second/kilobit
Trouble Shooting Aids:	Print out of housekeeping parameters.

CIMATS
DATA PROCESSING FLOW DIAGRAM

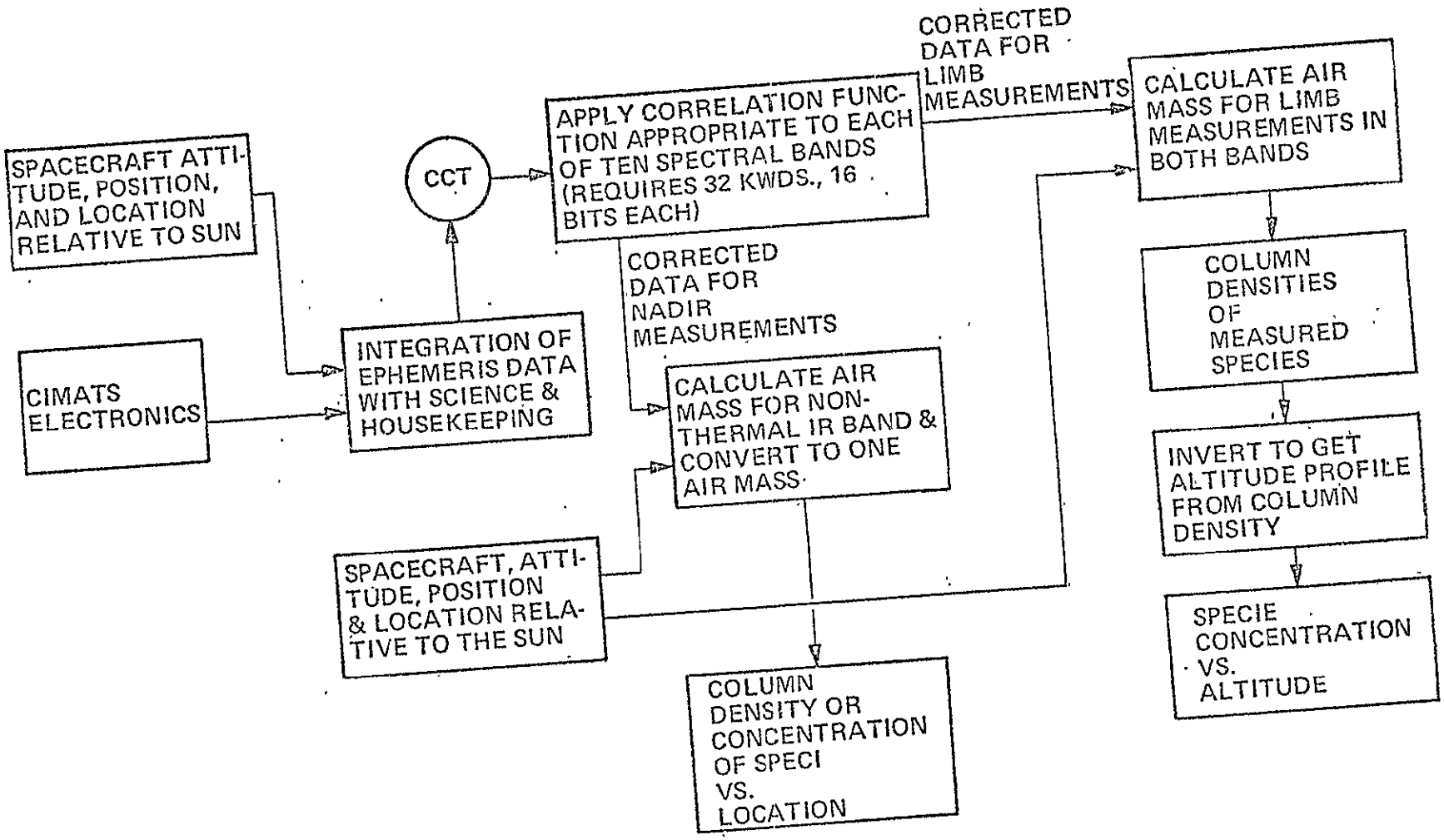

CIMATS

COMMAND REQUIREMENTS

Primary Power ON	1
Redundant Power ON	1
Telemetry Power ON	1
Primary Power OFF	1
Redundant Power OFF	1
Instrument Calibration ON	1
Instrument Calibration OFF	1
Scan Motor ON	1
Scan Motor OFF	1
Step Filter A	1
Step Filter B	1
	11

CIMATS

DIGITAL TELEMETRY SIGNALS

Primary Power Supply ON/OFF	1
Redundant Power Supply ON/OFF	1
Telemetry Supply ON/OFF	1
Instrument Calibration ON/OFF	1
Scan Motor ON/OFF	1
Step Filter Channel A	1
Step Filter Channel B	1
	7

MICROWAVE RADIOMETER/SCATTEROMETER

Data and Processing

Data Rate & Format:	Radiometer/Scatterometer - Serial, PCM, fully formatted 5-33 KBPS, BIØ-L, digital MSB first 10 bits/word, 200 words/frame, 4 sub-frames/frame. Housekeeping - 60 10-bit analog words, 4 10-bit digital words, all sampled once per frame (375 msec).
Duty Cycle:	On previous mission it was ≤ 30 minutes per orbit. It is designed for more frequent or higher duty cycle operation.
Processing Presently Done by Experiment Electronics:	The Radiometer/Scatterometer . . only measures return pulse signal power (P_R) for a finite time and A/D converts this for insertion into the data.
Ancillary Data Required:	S/C ephemeris - time - latitude, longitude of subsatellite point - attitude control angles and rates - 3 axes - altitude and orbital velocity Ephemeris data is needed to compute slant range to instantaneous measurement cell and field-of-view coordinates for that cell. Optional method would be to compute these in real time and include in sensor data stream as well as use for on-board processing of P_R data to σ^o (radar backscatter cross-section) data.

Application of Ancillary Data:

Algorithm for computing σ^o has slant range term, path loss term and antenna integral term. Each of these uses the ancillary data in their computation. Also, data is meaningless unless coordinated with specific geodetic location of cell being measured on ground. σ^o is given by:

$$\sigma^o = \frac{(4\pi)^3 R^4}{\lambda^2} \cdot \frac{P_R L^2}{P_T} \frac{1}{\int_A G_o^2 (x) f(x) dA}$$

where, R = slant range of the target
λ = wavelength of microwave energy used
L = one way atmosphere loss term
$G_o(x)$ = antenna gain function
$f(x)$ = two-way antenna pattern function
A = area illuminated
P_T = transmitted pulse signal power
P_R = return pulse signal power

Quick Look Processing Required:

Selected key housekeeping parameters (digital or analog) such as TWT voltages or digital sequence status bits give good indications of nominal operation.

Trend analysis of raw (digital count or analog voltages) data such as means, standard deviations would also provide rapid indicators of proper operation.

Processing of certain selected data sets over known targets of known characteristics would also be useful.

Preprocessing Desired:

Would ideally like to see output data as fully computed values of σ^o (radar back-scatter cross-section) and T_{ANT} (radar antenna temperature vs. latitude and longitude of cell field-of-view with supporting data of altitude range, time, sensor azimuth, etc. Algorithms required are described in PHO TR 524.

Algorithms Required for Processing Data:	The desired parameter is the windspeed u obtained by solving the following equation for u: $\sigma_o = Ku^n$. Algorithms for solving this equation can be found in "The Applications of SESAT-A to Meteorology" by W. J. Pierson, V. J. Cardone and J. A. Greenwood.
Processing Time Required:	TBD.
Troubleshooting Aids:	Certain selected housekeeping telemetry (analog and digital) points as well as limited science data measurements.

RADIOMETER/SCATTEROMETER
DATA PROCESSING FLOW DIAGRAM

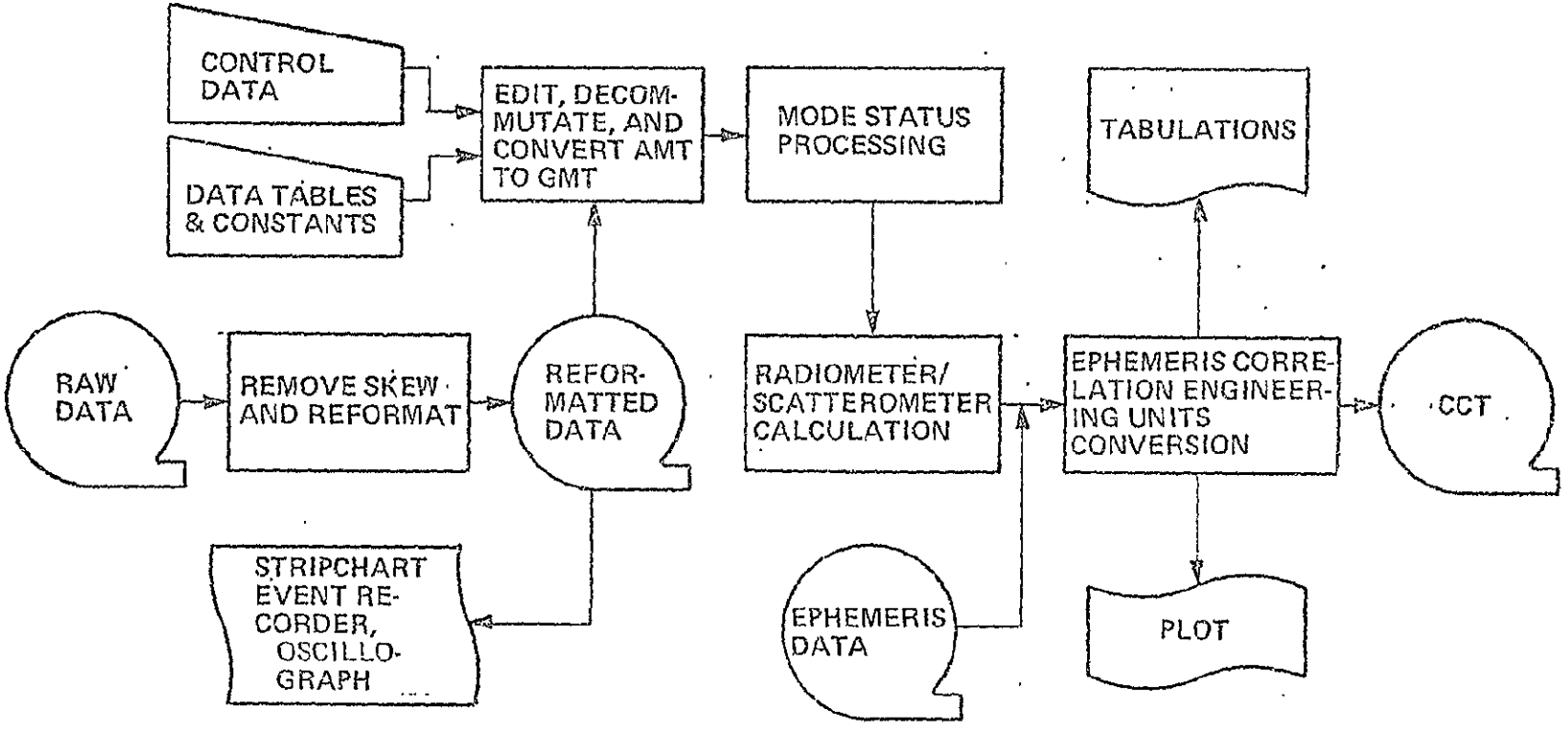

RADIOMETER/SCATTEROMETER

Command Requirements

Radiometer	- Power ON	
	- Power OFF	
Scatterometer	- Power ON	
	- Power OFF	

Scan Mode:

X-Track	Non-Continuous	RIGHT
X-Track	Non-Continuous	LEFT
X-Track	Non-Continuous	L/R
X-Track	Continuous	
In-Track	Non-Continuous	
In-Track	Continuous	

Five Polarization Modes

ELECTRON ACCELERATOR
DATA AND PROCESSING

Data Rate & Format:	Accelerator - Analog 0-5 volt, 0.01 accurac 500 samples/sec - voltage 500 samples/sec - current 50 samples/sec - housekeeping TADS: Digital, 9 bit, 2 count rate channels each at 500 samples/sec Analog, 0-5 volt, 0.01 volt accurac 3 channels at 500 samples/ Analog, 0-5 volt, 0.01 volt accurac 10 samples/sec - houseke
Duty Cycle:	~ 1/2 hour/orbit
Processing presently done by experiment electronics:	Accelerator - none TADS: Accumulate counts in channels and form logs of high count rates.
Ancillary data required:	Accelerator - S/C position, velocity, ori and accelerator orientation. TADS: Relative position with respect to spacecraft. Form merge tape containing data and pos Must maintain correct timing between T accelerator data.
Application of Ancillary Data:	On ground - to determine echo displacer from injection point as function of Latitu Longitude, time, etc. On board - to select accelerator progra orientation.
Quick Look Processing Required:	Scope display or strip chart record of and count rates for use in selecting gun Latitude and Longitude (with ~ degree r also needed.

Preprocessing Desired:	Science data - none. Attitude/orbit - smoothed, once per second sample rate.
Algorithms Required for Processing Data:	Calculation of echo displacement from injection point only requires knowledge of relative position of TAD and S/C. Determination of drift velocity and bounce time require correlation of injection time and echo detection time. Model prediction involves solving equation of motion for the velocity vector of an electron in a magnetic field. Solution to the equation of motion involves spherical harmonics and Legendre polynomials. Solution requires a few minutes on a CDC CYBER 74.
Processing Time Required:	~ 20 seconds/megabit on a CDC CYBER 74 for count rate data (this includes producing a high resolution strip chart). Each accelerator "on" session will require a few minutes calculation for model predictions.
Troubleshooting Aids:	Accelerator-battery voltages, filament heater current, logic operation and housekeeping data. TADS - check of telemetry system.

ELECTRON ACCELERATOR

DATA PROCESSING FLOW DIAGRAM

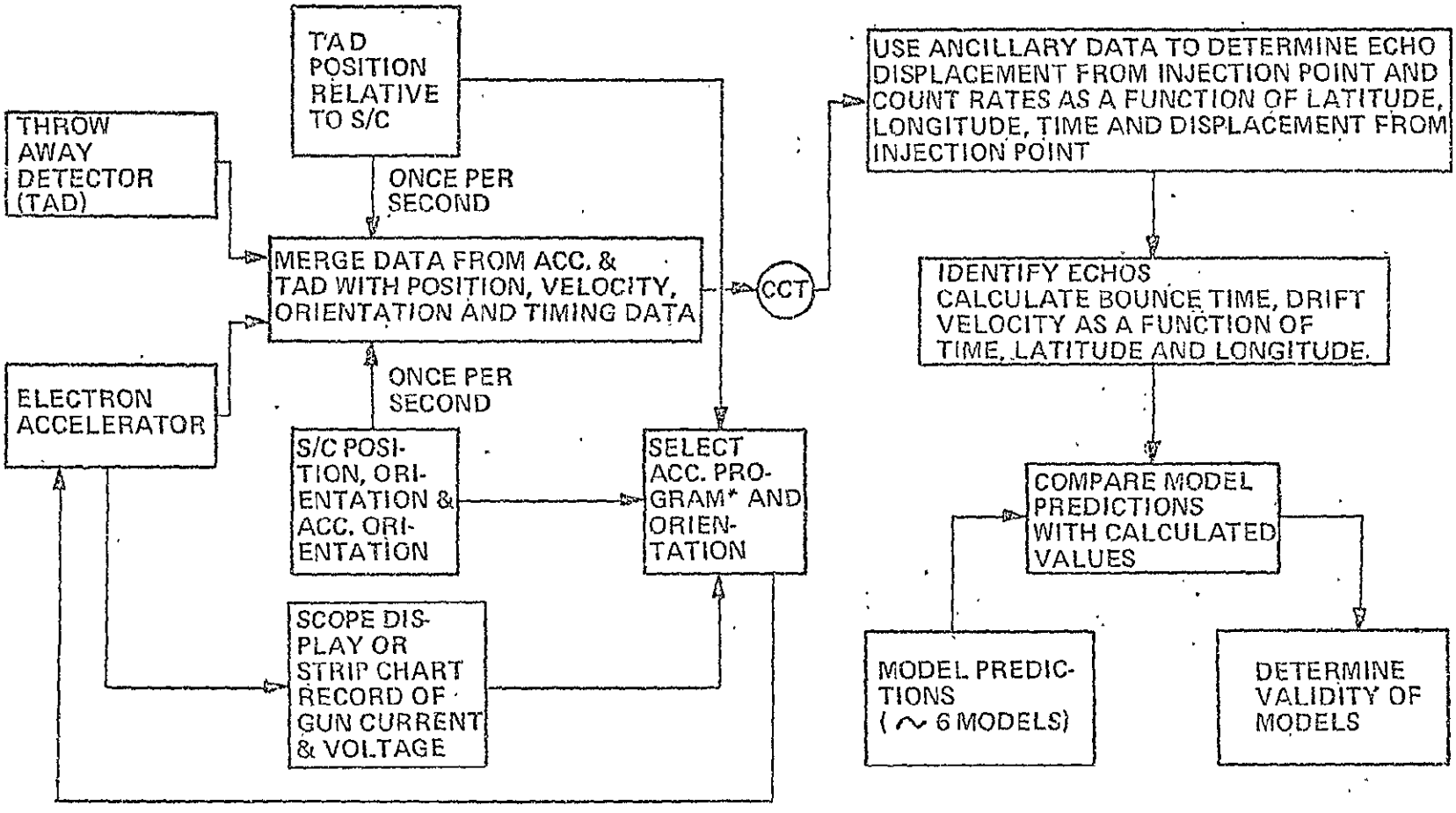

ELECTRON ACCELERATOR
COMMAND REQUIREMENTS

"Commands" will be astronaut activated switches for:

ON/OFF
Program Select
Accelerator Orientation

There would be approximately 6 accelerator programs and there should be less than 20 operations per orbit.

Telemetry Points

Accelerator high voltage monitor
Accelerator emission current
Accelerator program/logic step
Accelerator housekeeping monitor (TBD)
TAD count rates and log count rates

OPTICAL BAND IMAGE AND PHOTOMETER SYSTEM

(Subsystem 1 - Near IR Imager
Subsystem 2 - Ultraviolet Imager)

Data and Processing

Data Rate & Format:	4 MHz analog video signal.
Duty Cycle:	Variable - 10 minutes to major portions of orbit.
Processing Done by Experiment Electronics:	All of the video processing including generation of sync and blanking pulses is done within the experiment electronics as is the incorporation into the video signal of the internally generated housekeeping data. Look angles must be calculated externally.
Ancillary Data Required:	Universal time. Latitude, longitude and altitude of shuttle. Astronomical look angle. Housekeeping data from associated experiments desirable, such as current and voltage from electron accelerator. Internal housekeeping data. The world time, look angles and data from associated experiments can be incorporated into the data through the character generator. The remaining 4 KBPS should be inserted in the vertical interval.
Application of Ancillary Data:	Since OBIPS is a multi-purpose experiment, the use of ancillary data will be variable. In general, these data define the conditions pertaining to each image, i.e., the location of the shuttle, the look angle, the filtering that is used, etc.
Quick Look Processing Required:	The video signal is appropriate for quick look without further processing.
Preprocessing Desired:	None. The video signal is useable without further processing.

Algorithms Required for Processing Data:	All video pictures must be screened eliminate those which do not contain of interest. The capability to perfor the editing on-board would significan reduce the telemetry requirements. Techniques of interpreting the video will vary depending on the experimer
Processing Time Required:	TBD
Troubleshooting Aids:	The video and included housekeeping should be adequate for troubleshootir

OPTICAL BAND IMAGE AND PHOTOMETER SYSTEM

(Subsystem 1 - Near IR Imager
Subsystem 2 - Ultraviolet Imager)

Command, Telemetry, and Storage Requirements

1. No ground based commands are anticipated. The experiment operators will have control of several functions during the active period. Look angles as a function of time will in some cases be computer controlled.

2. Real time down link telemetry - Analog video (4 MHz) for 10 minutes to major portion of orbit.

3. Require storage of analog video (4 MHz) for one hour. There will be 100% on-orbit dump with no returned data.

OPTICAL BAND IMAGE AND PHOTOMETER SYSTEM

(Subsystem 3 – Visible and Near IR Photometer)

Data Rate & Format:	Maximum of 156 KBPS, 8 bit/word. Housekeeping - field of view, 1 word/sec. - filter temperature, 1 word/sec. - shutter, calibration lamp, voltage, 1 word/sec.
Duty Cycle:	10 minutes to major portion of orbit.
Processing Done by Experiment Electronics:	None.
Ancillary Data Required:	TBS.
Application of Ancillary Data:	The ancillary data defines the conditions pertaining to each measurement.
Quick Look Processing Required:	Ideally, it would be possible on-board and on the ground to read the response of the calibration source in addition to searching the records for intensities and look angles corresponding to particular times.
Preprocessing Desired:	None.
Algorithms Required for Processing Data:	Depends on particular experiment. Normally one would want to merge the intensity output of the photometer with information giving the look direction. The photometer may be pointed or it may be scanning, but basically one must identify where the instrument was looking. Also, the calibration data should be folded into the data.
Processing Time Required:	TBD.
Troubleshooting Aids:	Signal and housekeeping are adequate for troubleshooting.

OPTICAL BAND IMAGER AND PHOTOMETER SYSTEM

Data Processing Flow Diagram

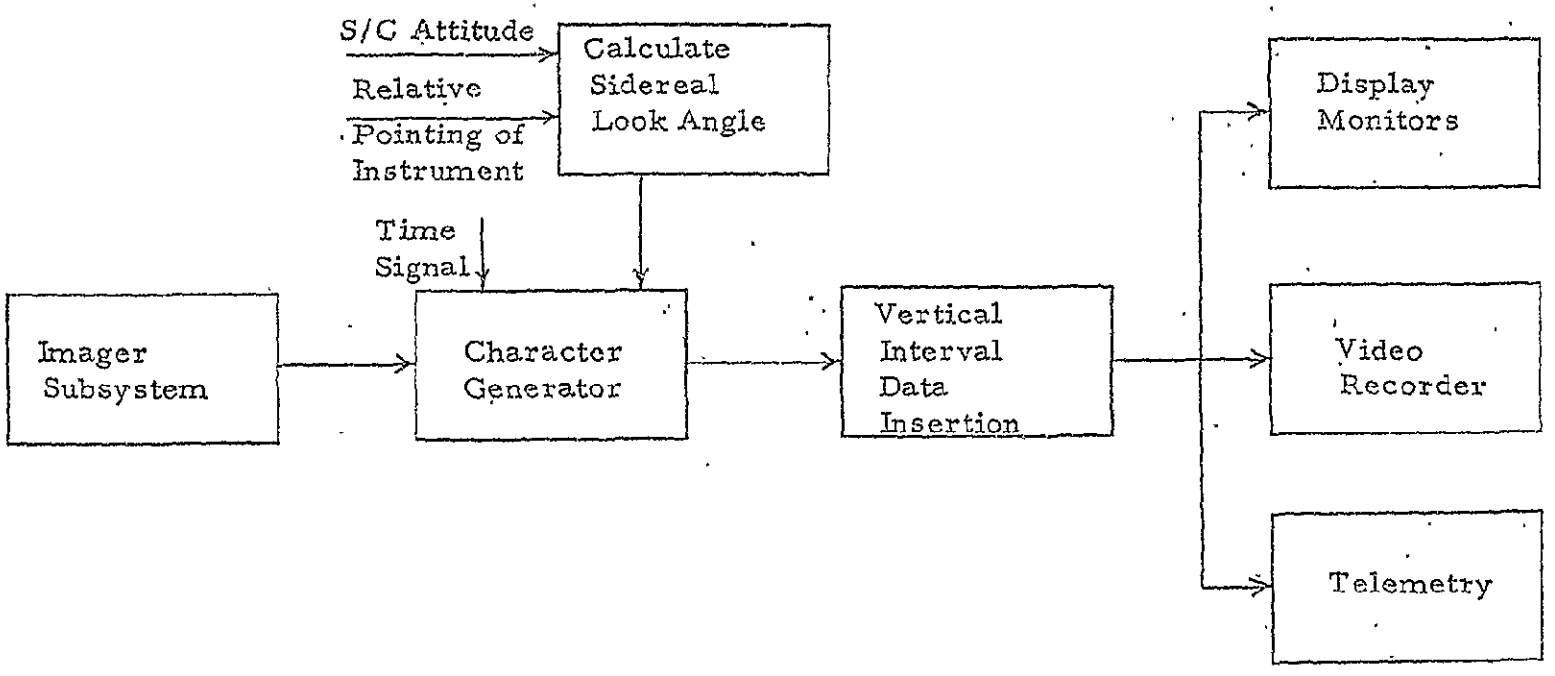

OPTICAL BAND IMAGE AND PHOTOMETER SYSTEM

(Subsystem 3 - Visible and Near IR Photometer)

Command, Telemetry, and Storage Requirements

1. The experiment operators will have control of all commands.

2. Average digital down link telemetry is 16 KBPS with resolution of 1 millisecond. Telemetry will vary from 10 minutes to major portion of the orbit.

3. Requires storage of digital data at an average rate of 16 KBPS for one hour. On-orbit dump of 100% of data is required.

6.0 GROUPING OF EXPERIMENTS

The selected boundary experiments were grouped into two payloads.

The ATS, the IRS, and the CIMATS are candidates for SEOPS missions and were grouped as a SEOPS payload.

The Electron Accelerator and the OBIPS are AMPS payloads instruments. The RADSCAT was grouped with these instruments to increase the scope of processing requirements of the payload and to broaden the range of representation, i.e., active microwave instrument.

These instruments may be operated in conjunction with each other. For examples, the ATS data may be corrected for atmospheric effects based on the processed output of the IRS. The OBIPS may be operated to view phenomena initiated by the electron accelerator. In general, these interactions have not yet been defined and it is premature to assume specific interactions; thus a group processing requirements can be represented at this time as the sum of the individual experiments' requirements.

Each set of requirements will be reflected in the design of the OEDSF, and means for permitting subsequent interaction between the various processing capabilities will be provided.

This approach will result in a more versatile processor which will accomodate future combinations of experiments. The sum of the requirements for each payload are shown on Tables 6-1 and 6-2 together with the experiment(s) giving rise to the process. Additionally, Command and Housekeeping functions as tabulated under these headings will be provided by the DEDSF.

AMPS GROUP PROCESSING REQUIREMENTS SUMMARY

	Electron Accelerator & Throw Away Detector	Microwave Radiometer/ Scattero-meter	OBIPS
COMMANDS			
Execution	X	X	X
Sequencing	X	X	X
Formatting	X	X	X
HOUSEKEEPING			
Limit Checks	X	X	X
Conversion	X	X	X
Monitoring	X	X	X
Display	X	X	X
DATA			
Correlation of Experiments	X		X
Instrument Calibration		X	X
Coordinate Transformation	X		X
Annotation of Data	X	X	X
Ancillary Data Insertion	X	X	X
Ancillary Data Processing		X	
Data Quality Assessment		X	X
Data Editing		X	X
Data Compression			X
Data Recording	X	X	X
Generate CCT	X	X	
Computational Processing	X	X	
Model Validation	X		
Correlation with Geodetic Parameters		X	

SEOPS GROUP PROCESSING REQUIREMENTS SUMMARY

	ATS	IRS	CIMATS
COMMANDS			
Execution	X	X	X
Sequencing	X	X	X
Formatting	X	X	X
HOUSEKEEPING			
Limit Checks	X	X	X
Conversion	X	X	X
Monitoring	X	X	X
Display	X	X	X
DATA			
Correlation of Experiments	X	X	
Instrument Calibration	X	X	X
Annotation of Data	X	X	X
Ancillary Data Insertion	X	X	X
Radiometric Correction	X		
Geometric Correction	X		
Nadir Angle Correction		X	X
Data Quality Assessment	X	X	X
Data Editing	X	X	X
Data Compression	X		
Generate CCT	X	X	X
Data Recording	X	X	X
Correlation with Geodetic Parameters	X	X	X
Computational Processing	X	X	X
Iterative Processing		X	
Signature Analysis	X		
Feature Reduction	X		
Clustering	X		

ORIGINAL PAGE IS
OF POOR QUALITY

APPENDIX A

ADVANCED TECHNOLOGY SCANNER

The major contribution of a scanner in a SEOPS mission is the ability to image simultaneously portions of the visual, near-infrared and thermal-infrared spectrum with good radiometric accuracy. The infrared region inherently provides considerable earth observation information and can be used to enhance spectral signature analysis within the visible channels. The SEOPS Scanner will be used as a complement to other contemporary Earth observation programs (EOS, SEOS) that will contain similar instruments in that the SEOPS Scanner will provide higher resolution data and can be mission-dedicated for coverage and spectral band selection.

The development status of the Advanced Technology Scanner is less mature than the other instruments being proposed for SEOPS. Three contractors have proposed three inherently different scanning concepts for the EOS mission application, and each contractor is presently testing breadboards of the scanning mechanism and other critical components. Both Honeywell and Hughes have produced space-qualified scanning radiometers (S192 and ERTS MSS respectively) which are the basis for their Advanced Technology Scanner designs. Therefore, both the Image Plane Conical Scanner (Honeywell) and Object Plane Linear Scanner (Hughes) are being considered for the SEOPS concept definition.

IMAGE PLANE CONICAL SCANNER

The principal elements of the multispectral conical image plane scanner as designed for the EOS application and adapted for SEOPS are shown in the isometric drawing presented as Figure A-1. Radiation from the ground is folded by the flat fold mirror to the spherical primary mirror.

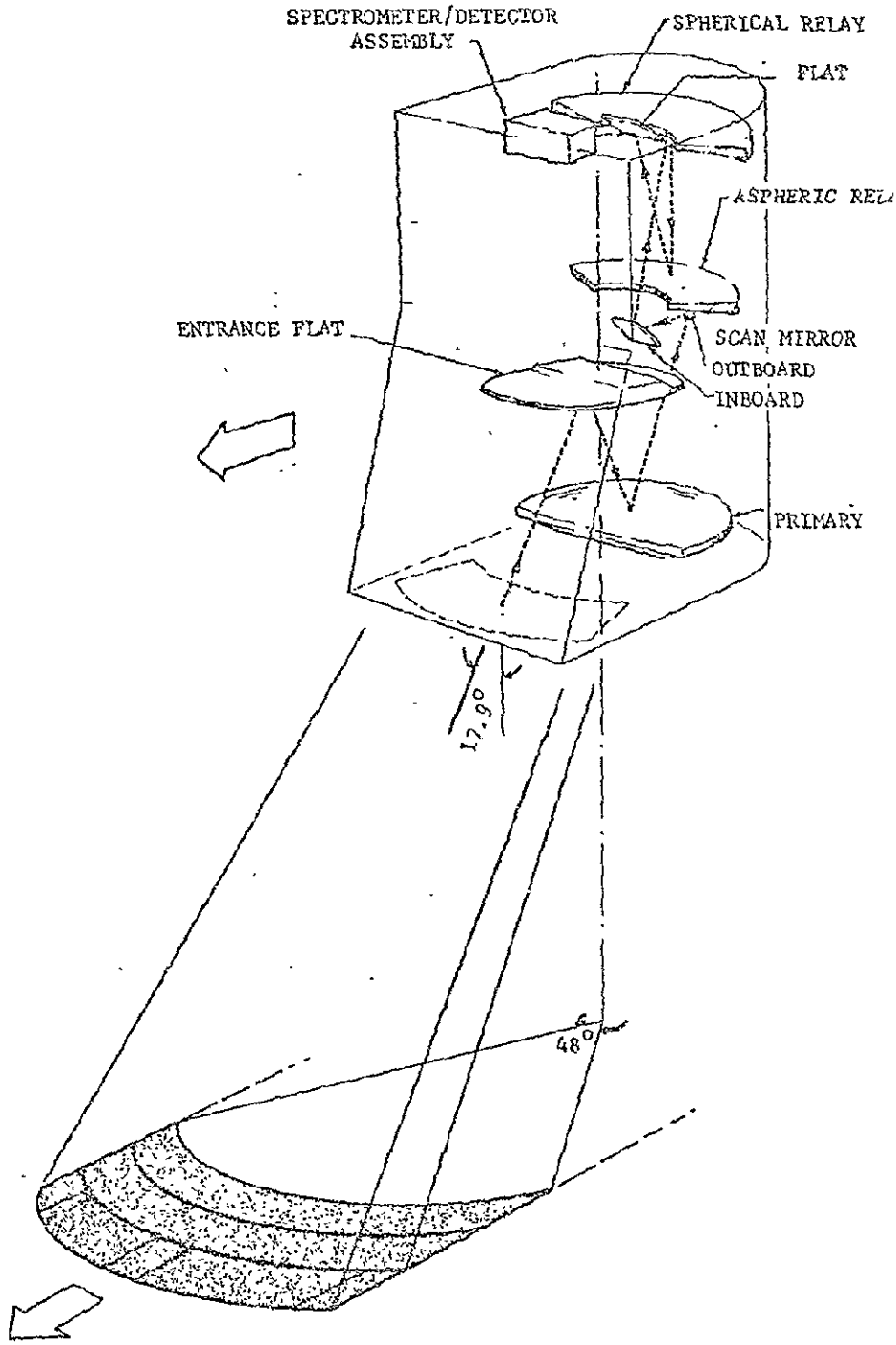

ADVANCED TECHNOLOGY SCANNER

The image plane formed by the primary mirror is scanned sequentially by six sets of scan mirrors along an arc that is 18 degrees off the nominal optical axis of the primary. In object space, this corresponds to scanning along a portion of a cone with half angle of 18°. The total scan angle (arc length) is equal to the 60° repetition angle between scan mirror pairs. Of this 60° scan angle, 48° of arc are used for ground scanning, resulting in a scan efficiency of 80%. The balance of the scan line (12°) is used for zero reference, calibration, and transition from one mirror pair to the next. The scan mirrors serve to fold the radiation onto the optical axis of the correcting optics which form a diffraction-limited image at the entrance slit of the spectrometer. The spectrometer utilizes a dichroic filter and prism to separate the visible and near-IR radiation (see Figure A-2) before bringing the radiation to a focus on arrays of silicon and indium antimonide detectors. The thermal IFOV is separated spatially from the IFOV corresponding to the other spectral channels and is sized at four times the size of the visible and near-IR IFOV to maintain a reasonable MTF given the diffraction spot size at 10 um wavelength. The thermal radiation is relayed to an array of (HgCd)Te detectors through a cooled bandpass interference filter. Signals from the various detectors are amplified, conditioned, and digitized. Both the silicon and the InSb detectors are of the high impedance type; therefore, the same circuitry is used for each channel of the six high resolution spectral bands. The signal processing electronics are modularized to the maximum extent possible using integrated circuitry.

A block diagram of the scan wheel servo system is shown in Figure A-3 The rotational rate of the scan wheel is controlled by a phase-locked loop

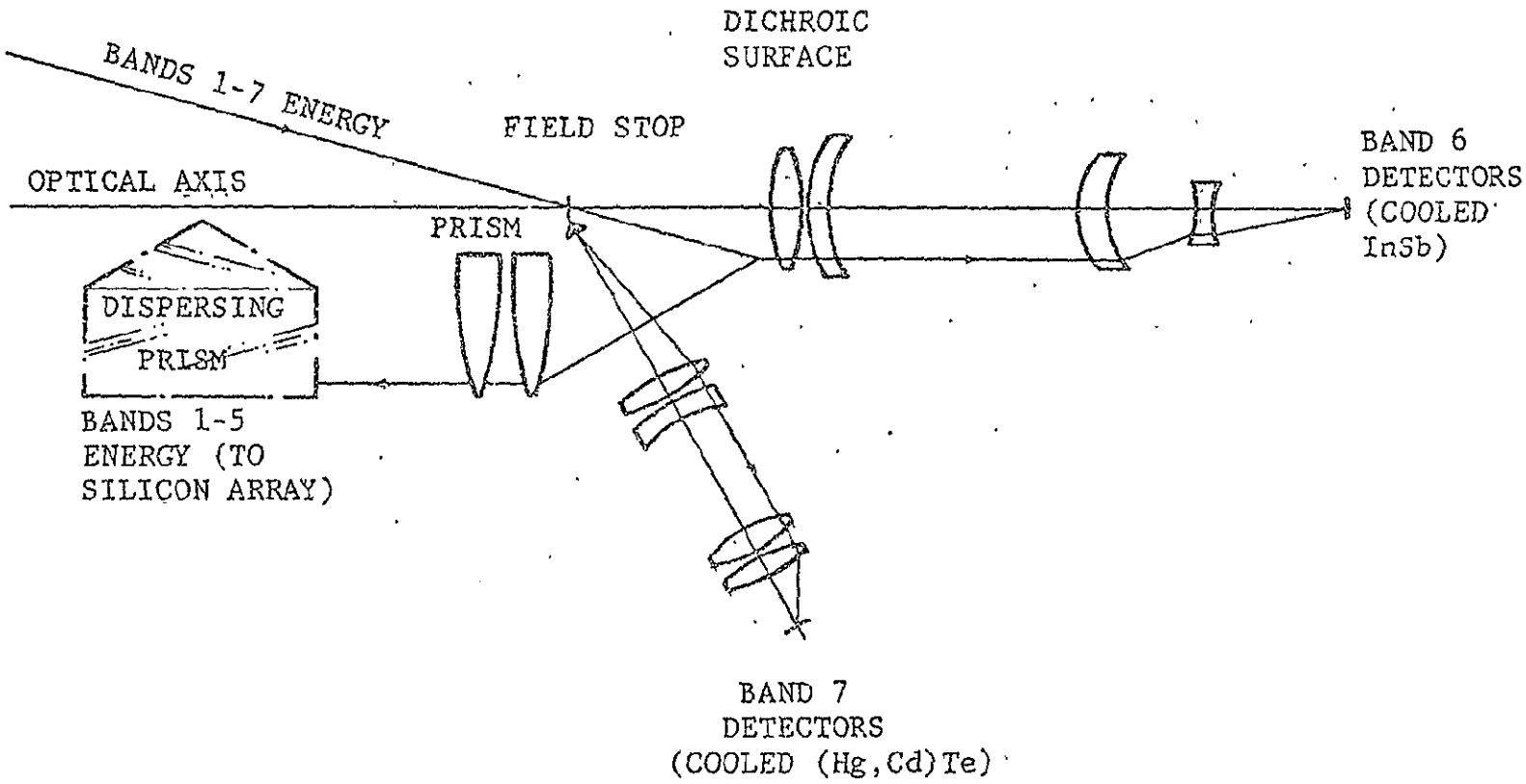

SPECTROMETER LAYOUT

Figure A-2

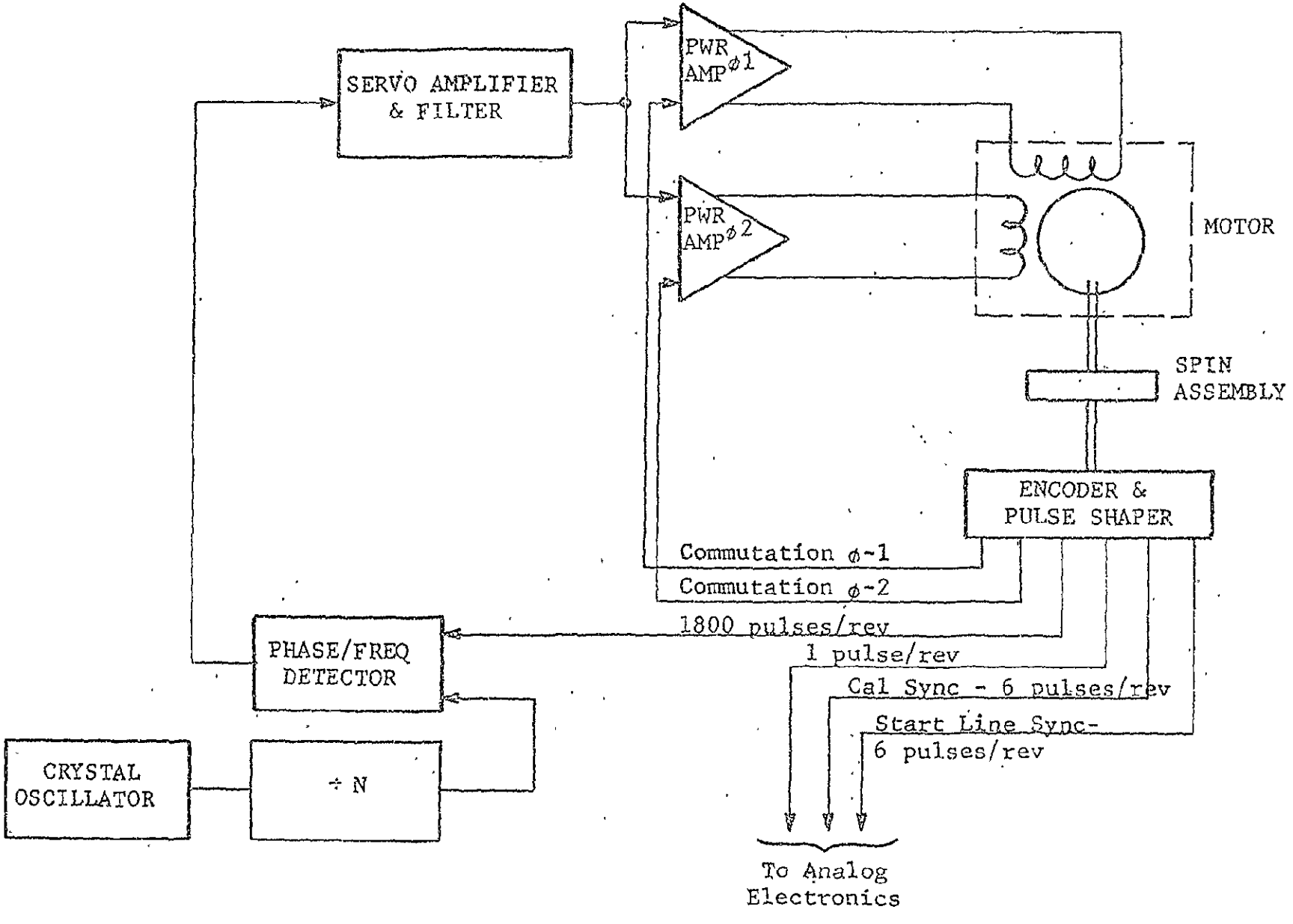

BLOCK DIAGRAM SCANNER SERVO SYSTEM

Figure A-3

which compares the square wave output of the optical shaft encoder with a reference frequency derived from a crystal-controlled oscillator. A counter is used to count down from the crystal frequency to the shaft encoder frequency. The count-down ratio is determined by the spacecraft velocity to altitude (V/h) ratio. Breadboard tests of the scan wheel and associated servo system have demonstrated a scan accuracy of ±0.15 IFOV in the scan direction and ±0.10 IFOV in the track (velocity vector) direction for a 43 microradian IFOV. Accordingly, ground correction of the data to remove scan non-uniformities will not be necessary.

Modifications for SEOPS

The conical image plane scanner, as designed for the EOS application, is easily adapted to the SEOPS concept for use as the Advanced Technology Scanner (ATS) on shuttle missions. The principal modifications required are: (1) the incorporation of an offset pointing mechanism to position the entrance fold mirror for viewing ground swaths displaced from nadir, (2) the addition of signal conditioning electronics to interface the analog signals from the detectors with the digital tape recorder, (3) a control module to slave the scan wheel rotational speed to the V/h of the shuttle, (4) replacement of the radiative cooler with a Joule Thompson cooler, and (5) capability of changing spectral bands for different missions.

Offset Pointing

Offset pointing is incorporated into the ATS design by articulating the entrance fold mirror. A stepper motor and control logic position the mirror up to ±10° from the nominal position to allow offset pointing of up to ±20 degrees.

ORIGINAL PAGE IS
OF POOR QUALITY

The offset pointing requirement of the SEOPS application introduces distortion into the scanner data in a manner, however, which may be compensated using straightforward logic with either on-board or ground processing. When viewing a swath centered on the nadir, the line-of-sight distance to the ground is constant and the ground trace is a portion of a circle. The introduction of offset pointing shows the ground trace as shown in Figure A-4. This introduces a variation along the scan line in the ground resolution. Table A-1 lists the percent variation in ground resolution at the beginning and end of a scan line relative to the mid-point for several offset pointing angles. A more pronounced effect of the offset pointing is a skewing of the ground "footprint" of the scanner. For a linear, multiline scanner the skewing takes the form of a non-symmetrical "bow tie" while for a conical scanner, offset pointing results in a skewing of the segment of a circle that is the normal footprint. Table A-2 lists the difference in the ground radius to points at the beginning and end of a scan line relative to the midpoint of the scan line. The difference is expressed in terms of the number of ground resolution elements equal to the displacement distance based on 15 meter resolution from 370 Km altitude.

The variation in ground trace with offset pointing angle is of little consequence in the ultimate use of the data acquired by the ATS since the ground trace is well defined by the cone angle, offset pointing angle, scan angle, and vehicle altitude. Computer identification of ground features for crop inventory, urban development, etc. can be done in any coordinate system. For those situations where graphic presentation of the data is required, a row/column inversion technique is used to allow the production of

ORIGINAL PAGE IS
OF POOR QUALITY

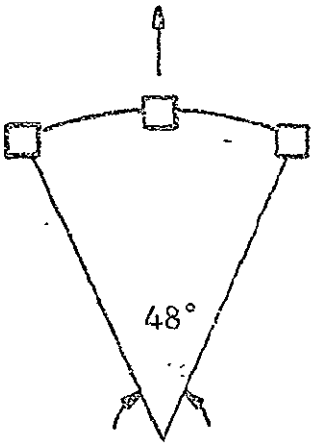

Ground Trace
at Nadir

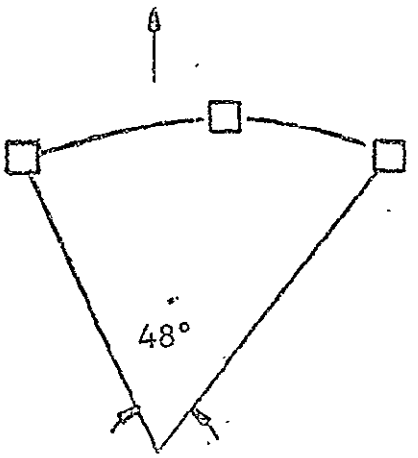

Ground Trace
for 20° Offset

GROUND TRACE AT NADIR AND MAX OFFSET

Figure A-4

TABLE A-1

Per cent Variation in Ground Resolution as a Function of Offset Pointing Angle

Offset Point Angle	Beginning of Scan	End of Scan
0	0	0
10	-2%	+2%
20	-5%	+5%
30	-7%	+8%

TABLE A-2

Skewness of Ground Scan in Number of IFOV for 15 Meter Resolution from 370 Km Altitude

Offset Pointing Angle	Beginning of Scan	End of Scan
0	0	0
10	-174	221
20	-501	704
30	-1256	1745

ORIGINAL PAGE IS
OF POOR QUALITY

pictures on a linear film writer or reconciliation of data to an orthogonal grid map. With reference to Figure A-5 , the first j pixels of each of n rows is read into a memory, the data is transferred from the memory to the film writer a column at a time. The procedure is repeated using successsive groups of j pixels in each of the n rows until all data has been utilized. The starting point of each line in the film writer is determined by the locus of the ground trace. This procedure has been used to produce imagery from S-192 multispectral scanner data with entirely satisfactory results. It should be noted that the success of this procedure is due to the high degree of scan repeatability already demonstrated on the breadboard model.

Data Handling

The data formatting procedure of the Advanced Technology Scanner is determined by the characteristics of the high data rate tape recorder. Based on experience gained during the S-192 multispectral scanner Skylab program the best data handling procedure is to record the raw data from the scanner directly on tape with each tape track corresponding to a scanner data channel (i.e., a particular detector). Accordingly, the detector arrays are configured to scan 20 lines in parallel for the six high resolution spectral bands (see Figure A-6) and five lines in parallel for the low resolution thermal band. The electronics associated with the 125 data channels are modified so that each data channel culminates in a serial digital output. The encoded serial digital output from each of the 120 high resolution channels is fed directly to one of the 120 primary tracks of the tape recorder. Five of the twelve spare tracks are utilized to record data from the five thermal channels. Calibration and housekeeping data are injected in the data stream during the transition from one scan mirror pair to the next, providing a scan line by scan line check for radiometric stability.

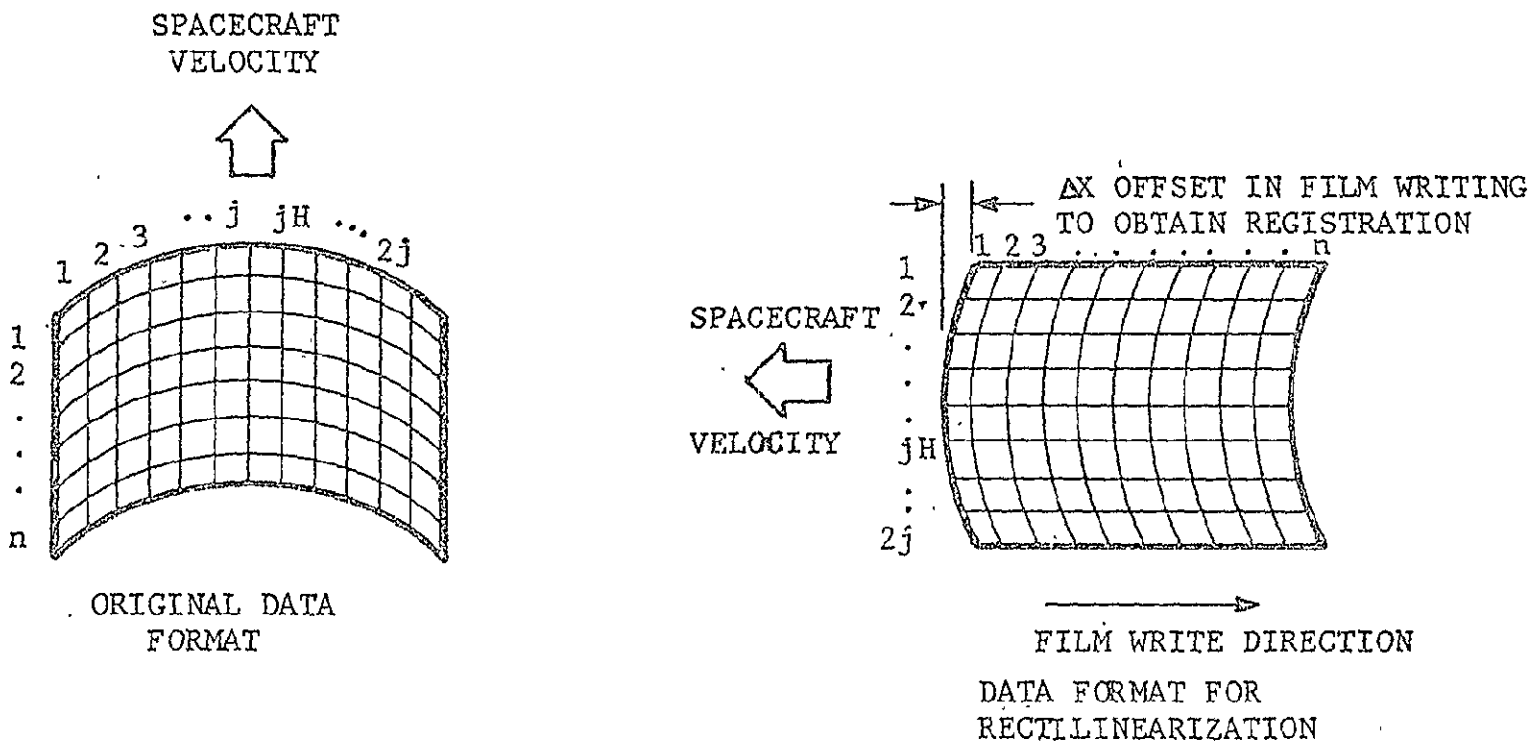

SIMPLIFIED DATA RECTILINEARIZATION

Figure A-5

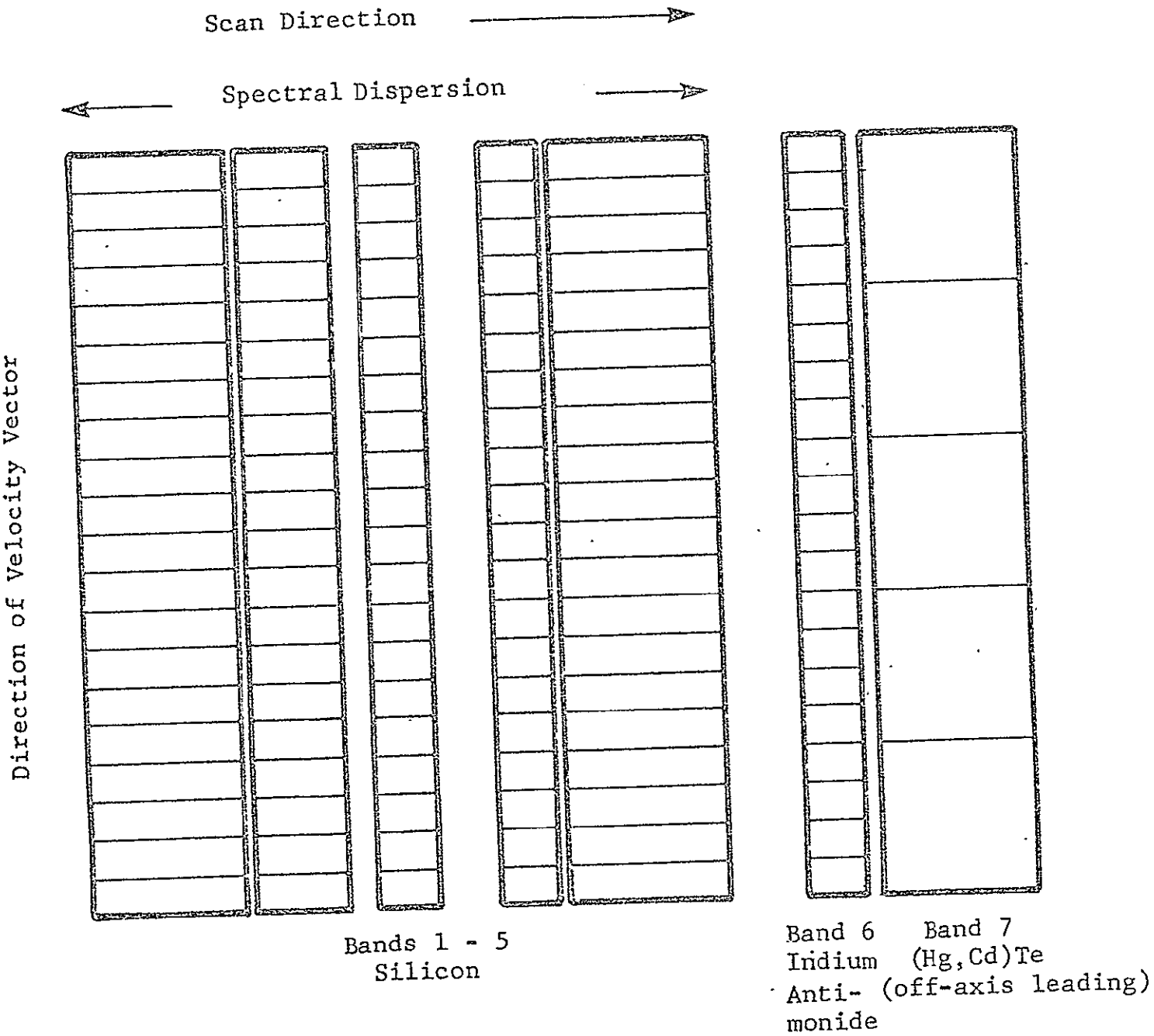

FOCAL PLANE CONFIGURATION

Figure A-6

The one difficult interface between the ATS and the tape recorder is matching the variable data rate of the ATS (a function of V/h) with the fixed acceptance rate of the tape recorder (2×10^6BPS per track at 100 IPS). The data rate of the scanner is determined by the number of pixels (ground resolution elements) scanned per second, the number of samples/pixel, and the bits/sample. Figure A-7 presents the relationship between pixels per second per channel (high resolution spectral bands) and shuttle altitude based on a 43 microradian IFOV, 6200 pixels per swath width, and 80% scan efficiency (providing a maximum ground resolution of 30 meters from the highest expected Shuttle operating altitude).

If it is now assumed that the scanner is capable of detecting 0.5% differences in reflectivity over the expected range of albedo , then a 10 bit word is required to encode the analog signal from the detector. It is shown in Figure A-7 that at one sample per pixel the bit rate per channel is equal to the maximum tape recorder track capability of 2 MBPS at an altitude of 180 nm and decreases to 40% of this value at 400 nm. The minimum hardware solution to this problem is to sample at a constant rate using the tape recorder clock to control the sampling and digitizing electronics. The oversampling (more than one sample per pixel) that results at higher altitudes is removed either with onboard or ground processing. Data rate limitations at lower orbit altitude may be circumvented through reduction in data requirements (reduced dynamic range, increased pixel size) over the entire operating spectrum or through incorporation of an interchangeable spectrometer with reduced spatial resolution for low altitude missions. For these missions flown at altitudes below 180 nautical miles the angular IFOV is increased by 40 per cent to 60 microradians. This increases the ground resolved distance at

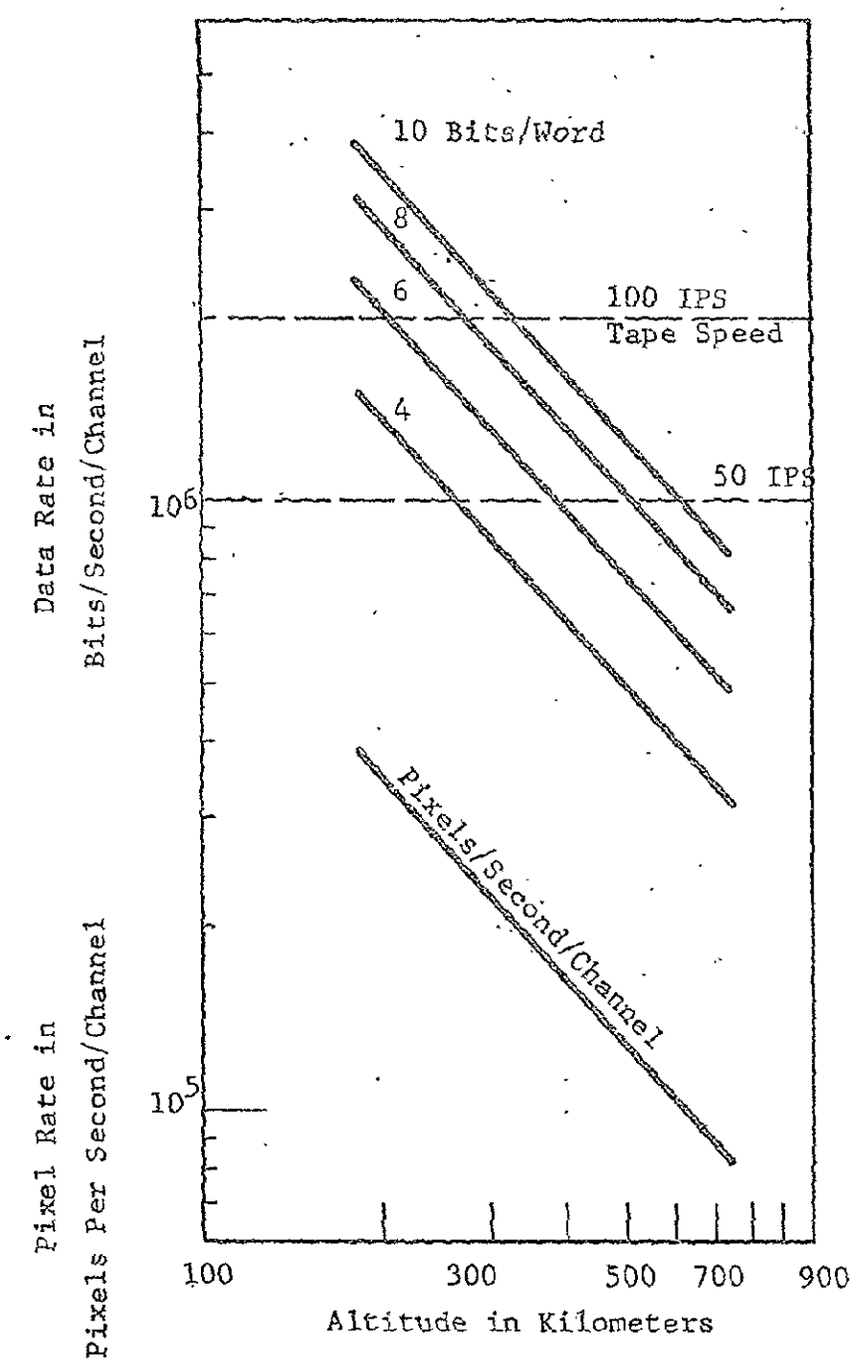

DATA RATE TRADEOFF

Figure A-7

180 nm altitude from 14 to 20 meters and reduces the data rate by a factor of two. The change in resolution is accomplished by replacing the 43 μrad spectrometer assembly with a 60 μrad assembly. Electronics associated with the spectrometer assembly effect the necessary change in scale factor between shuttle V/h and scan speed.

V/h Control

In order to maintain contiguous ground coverage for missions flown at different altitudes, it is necessary to change the speed of the scan wheel. With reference to Figure A-3 the countdown circuitry between the crystal oscillator and the phase comparator is replaced by a programmable divider. The countdown ratio is either preset prior to launch or is continuously controlled by a signal supplied from the Shuttle flight-control computer. The countdown ratio is included in the housekeeping recorded on the data tape. This technique allows contiguous coverage from elliptical as well as circular orbits.

Spectral Coverage

The scanner is designed to cover the spectral region from 0.4 micrometers to 1.75 micrometers and the thermal atmospheric window (10.4 - 12.6μ). The conical scanner utilizes a spectrometer to effect spectral separation. It is currently projected that the spectral bands will be determined by the geometry of the solid state detector arrays located at the image plane of the spectrometer.

The desirability of being able to change the spectral bandpasses of the instrument results in a configuration which allows quick modification of spectral response between missions. The entire spectrometer including optics, detectors, and pre-amplifiers forms a replaceable unit which is mated to the

telescope by means of alignment pins and clamping bolts. While one unit is being flown, a second unit is modified and aligned using the GSE alignment hardware. Small changes in spectral band edge definition are handled by changing the mask in front of the silicon array. Major changes require the replacement of the array. The unit is completely aligned and checked out prior to installation in the ATS.

Performance of SEOPS Instrument

The fact that the ATS must operate over a range of altitudes leads to a range of instrument values. The principal instrument parameters are presented in Table A-3 for an altitude range of 185 to 740 kilometers. Figure A-8 presents the relationships between altitude and ground resolution, swath width, and scan wheel speed to facilitate the determination of intermediate values of these parameters.

The radiometric performance of the ATS is determined in part by the higher data rate required at the lower operating altitude relative to the EOS application. The maximum data rate is twice the EOS data rate which results in a reduction in instrument sensitivity by a factor of two, all other parameters being equal (integer scaling rather than root scaling being due to the characteristics of the detector/preamplifier at high frequencies). Table A-4 summarizes the radiometric performance of the ATS for a sun elevation angle of 75° and an albedo of 20%. The signal-to-noise ratio is sufficient to allow detection of 0.5% changes in reflectivity.

Interface Requirements

1. Mechanical - The outline drawing of Figure A-9 illustrates the principal dimensions and the mounting points of the ATS for SEOPS. The

Table A-3

ADVANCED TECHNOLOGY SCANNER PERFORMANCE PARAMETERS

Altitude Range	330 - 740 KM (180 - 400 NM)	185 - 330 KM (100 - 180 NM)
Angular IFOV (microradians)	43	60
Ground Resolution (meters)	14 - 32	11 - 20
Swath width (kilometers)	87 - 195	47 - 87
Scan Wheel Speed (rpm)	260 - 107	350 - 175
Scan Efficiency	80%	80%
Signal Bandwidth (kHz)	100	100
Data Rate (MBPS)	240	240
Clear Aperture (cm^2)	1340	1340

Table A-4

ATS RADIOMETRIC PERFORMANCE

Spectral Band (micrometers)	Noise Equivalent Radiance ($microwatts/cm^2 sr$)	S/N*
0.42 - 0.52	16	95
0.52 - 0.60	13	75
0.63 - 0.69	12	55
0.74 - 0.80	11	45
0.80 - 0.91	10	75
1.55 - 1.75	8	46
10.4 - 12.6	13	160**

*For an albedo of 20% and sun elevation of 75°.

**Equal to 0.5°C NEΔT.

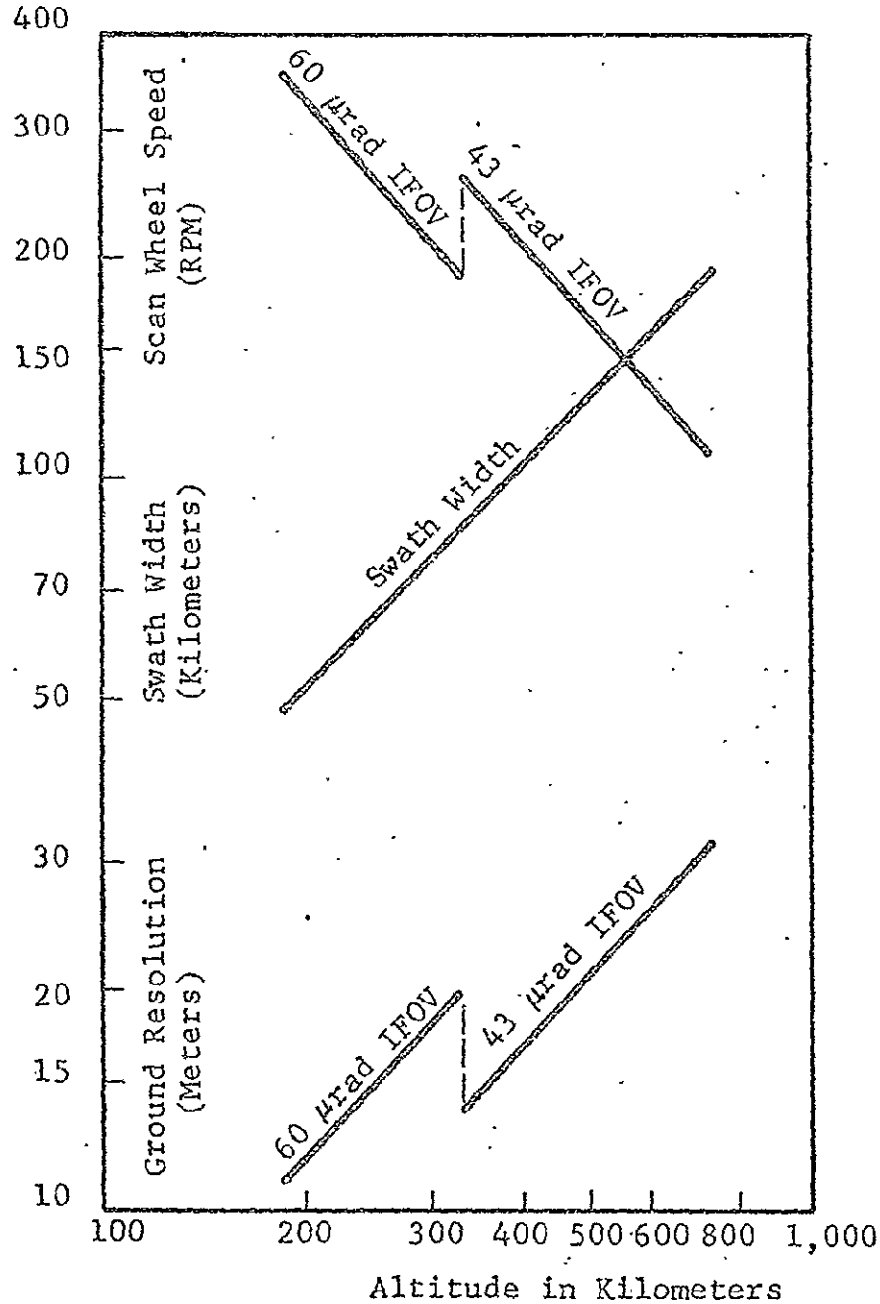

PERFORMANCE VARIATION WITH ALTITUDE

Figure A-8

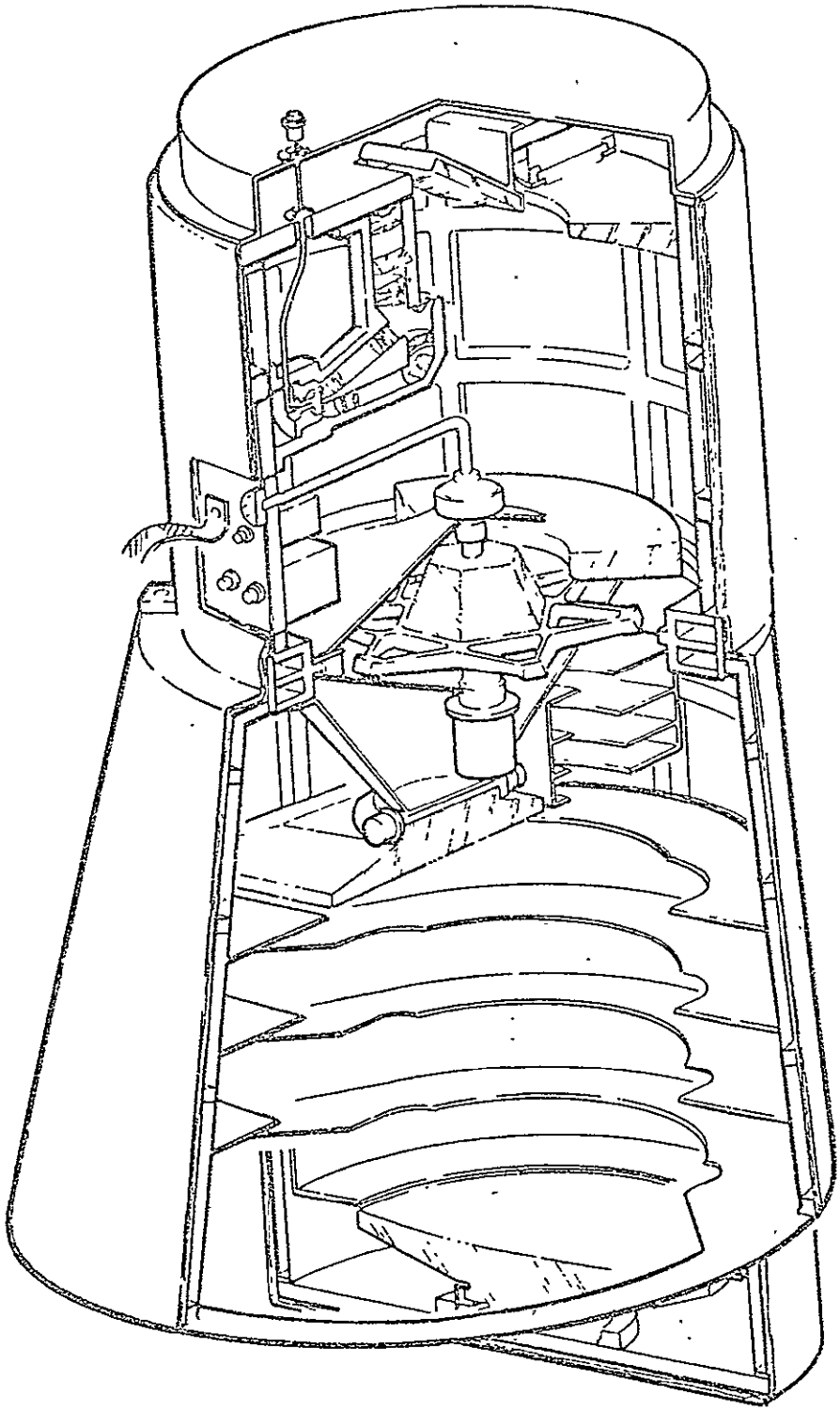

ADVANCED TECHNOLOGY SCANNER

Figure A-9

view angles are designed to accommodate a ±20 offset pointing capability. The estimated weight of the instrument is 173 Kg with the center of gravity located in the plane of the mounting ring. The scan wheel rotating at 200 rpm produces an angular momentum of approximately 2.4 ft/lb/sec which is compensated to within 0.2 ft/lb/sec by a 3000 rpm counter rotating mass.

2. Thermal - The optical quality of the ATS is maintained by holding the aluminum structure that constitutes the optical bench of the instrument at a constant 28° ±.5°C using a network of temperature sensors and thermostatically-controlled strip heaters. Heater power requirements (approximately 50 watts) are minimized by thermally isolating the instrument from the surrounding environment using multilayer insulation and low thermal conductivity materials at the support interface.

The constant temperature requirement of the scanner dictates that the integrated thermal environment surrounding the ATS cannot exceed 27°C. The average power dissipated by the electronics is quite low due to the low duty cycle of the instrument; however, the peak power when operating is about 200 watts. To prevent large thermal gradients from being introduced into the optical structure the electronics are thermally isolated from the optical system. Heat generated by the electronics is conducted to the SEOPS structure via copper straps.

The detector arrays for spectral bands 6 and 7 require cryogenic cooling. Both arrays are located in a common dewar and are cooled by a self regulating Joule-Thompson cooler. The cooler is supplied by an 11 litre bottle of argon gas at a pressure of 6000 psi located remote to the ATS.

ORIGINAL PAGE IS
OF POOR QUALITY

3. Electrical

The electrical interface between the ATS and the SEOPS consists of, power leads, signal leads, and control leads. The power requirements are detailed in Table A-5. The interface between the high data rate tape recorder and the ATS requires 125 twisted shielded pairs to handle the serial binary input to the data tracks and a channel for the tape recorder clock to synchronize the digital circuitry of the ATS. The electrical interface is summarized in Figure A-10.

Typical ground commands transmitted and required for normal operations are given in Table A-6. The vehicle shall supply a clock signal for data synchronization.

A typical telemetry complement would include approximately 21 digital and 32 analog telemetry points. The digital telemetry provides verification for all command inputs. Nominal output voltage is 5 volts. Analog telemetry outputs are developed or processed such that the normal output range is zero to +5 volts. Table A-7 gives a typical list of the telemetry functions monitored.

The operating sequence depends in part on the length of time between data runs. If data is being taken once per orbit the thermal control system is left on. The instrument is placed in a standby mode 10 minutes prior to a data run. This allows the scan wheel to come up to speed and synchronize. In the automatic sequence mode the instrument shifts to the ready mode after a delay of eight minutes. In the ready mode, power is applied to all circuitry. The taking of data is controlled by starting and stopping the high data rate tape recorder. Manual overrides of all controls are also provided.

ORIGINAL PAGE IS OF POOR QUALITY

Table A-5 · Power Requirements

Analog Electronics	78 watts
Digital Electronics	25 watts
Scan Wheel Drive	12 watts max.
Housekeeping Electronics	12 watts
Thermal Control	50 watts max.
Total Power including Heaters	177 watts

Required Voltages	
± 15V	88 watts
+ 5V	27 watts
+ 28V	62 watts max.

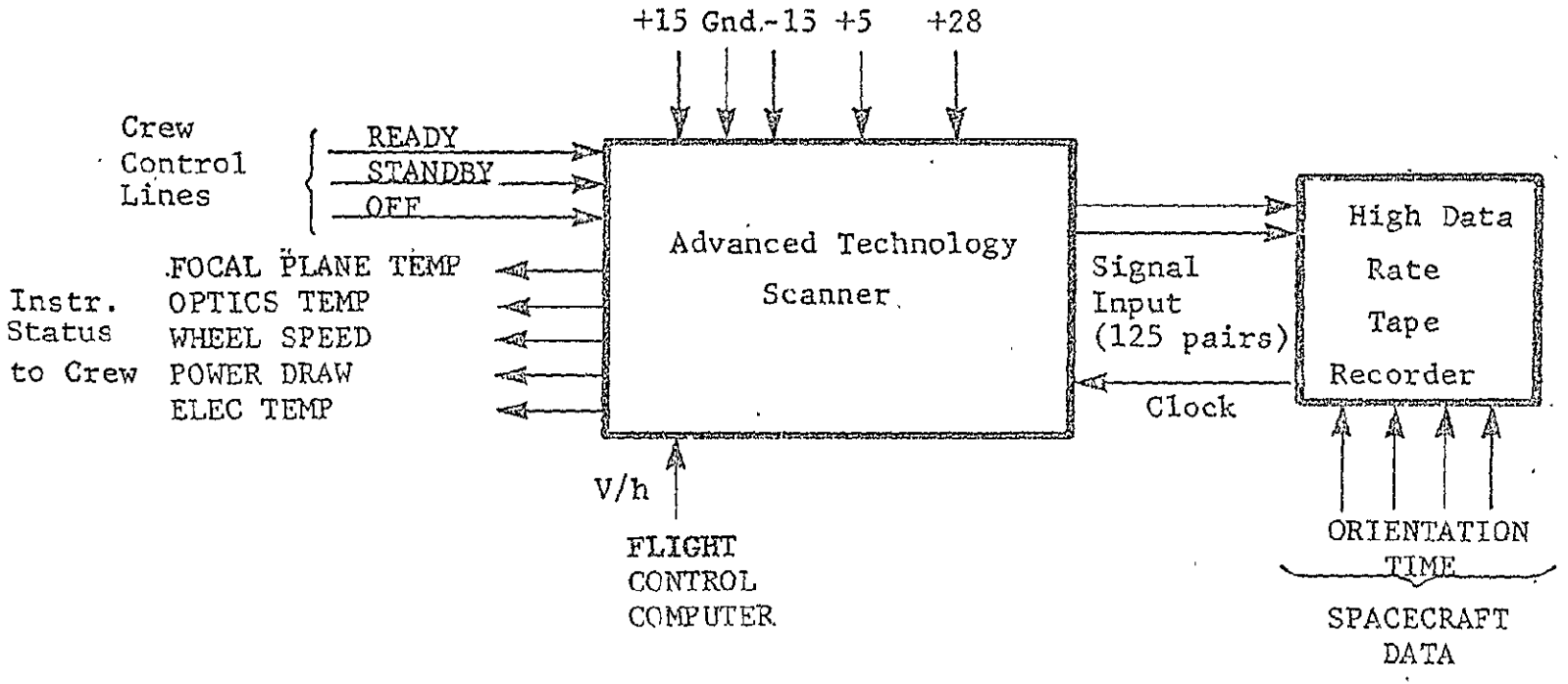

ELECTRICAL INTERFACE DIAGRAM

Figure A-10

TABLE A-6

ADVANCED TECHNOLOGY SCANNER

COMMAND REQUIREMENTS

Primary Power ON	1
Redundant Power ON	1
Telemetry Power ON	1
Power OFF	1
Focus Forward	1
Focus Reverse	1
Electronic Calibration ON	1
Radiation Calibration ON	1
Calibration OFF	1
Heater Control ON/OFF	2
Bands 1 thru 7 Power ON	7
All Bands OFF	1
V/h Setting	1
Bands 1 thru 7 Gain Normal	7
Bands 1 thru 7 Gain High	7
	34

ORIGINAL PAGE IS
OF POOR QUALITY

C-2

TABLE A-7

ADVANCED TECHNOLOGY SCANNER TELEMETRY REQUIREMENTS

DIGITAL TELEMETRY SIGNALS

Primary Power Supply ON/Off	1
Redundant Power Supply ON/Off	1
Telemetry Supply ON/OFF	1
Electronic Calibration ON/OFF	1
Radiation Calibration ON/OFF	1
Heat Controller ON/OFF	1
Band 1 to 7 Power ON/OFF	7
Band 1 to 7 Gain NORM/HIGH	7
Focus Limit ON/OFF	1
	21

ANALOG TELEMETRY SIGNALS

Cooler Temperature Sensors	2
Structure Temperature Sensors	8
Band 7 Detector Bias	7
Heater Power	1
Power Supply Voltage	8
Input Voltage	1
Miscellaneous	5
	32

ORIGINAL PAGE IS
OF POOR QUALITY

4. Attitude Stability - The scanner takes data in a continuous rather tha a snapshot fashion; therefore, the effect of residual rates is not to particularly smear the image but to displace metrically the location o each individual pixel so that the shape of the reconstructed image is distorted. This can, with some increase in expense and complexity, be corrected in the ground processing system if the residual rates (about a three axes) are recorded and made available for ground processing.

The spacecraft attitude control stabilization requirements for the scann are based upon the scan parameters as defined below (nominal 458 Km altitude) and the geometric accuracy requirements placed upon the system performance by the data user.

SEOPS Scanner Scan Parameters

Angular resolution (IFOV) = 43 μrad
Dwell time per IFOV = 7.14 μsec
No. of IFOV/scan line = 6200 elements
Time per scan line = 44.3 msec
Frame time for 6200 x 6200 elements = 13.75 sec

If the requirement is established for maintaining element-to-element registration from the beginning to the end of one scan line, the error is 7.75 μrad or 0.18 of an IFOV for a scan time of 44.3 m sec and assuming a Shuttle stabilization of 0.01 deg/sec (175 urad/sec). This would appear to be an acceptable error.

However, if registration accuracy is to be maintained for a full frame o 6200 x 6200 elements with a total frame time of 13.8 seconds, the error from beginning to end of frame can be as much as 2420 μrad which is equivalent to 56 IFOV's. To maintain the frame end-to-end registration accuracy to within 1 IFOV, the stabilization requirement would need to

to be 3.1 μrad/sec or 1.8×10^{-4} deg/sec. This geometric accuracy specification would definitely require either an independently stabilized platform for the scanner or measurement and correction for the residua rate. the recommended approach is to utilize the data from the SEOPS gyro package and geometrically correct the imagery with either onboard or ground processing.

OBJECT PLANE LINEAR SCANNER

The primary difference between the object plane linear scanner and the image plane conical scanner is the technique utilized for implementation of the cross-track scan. Given the same basic requirements, such as instantaneous field of view, swath width, orbital altitude, number of spectral channels, and data rate limitation, the performance of the two scanners would be comparable. The performance differences would be determined by such parameters as scan efficiency, optical transmission efficiency, and detector/electronics noise. Therefore, this section will be limited to a discussion of the differences between the two scanner design approaches.

The design concept and mechanical configuration for the object plane linear scanner is shown pictorially in Figure A-11 . The estimated weight for this design is 180 Kg with a power requirement of 100 watts. The object plane scanning is obtained by directing the ground scene with an oscillating scanner mirror through a telescope and relay optics to a series of detectors located at the focal plane. Spectral definition is obtained by a series of bandpass filters with spectral separation into the seven spectral bands obtained by spatial separation. Data is taken on each half cycle of the scanning mirror oscillation by use of an image-motion-compensation dual mirro

ORIGINAL PAGE IS
OF POOR QUALITY

FIGURE A-11

OBJECT PLANE LINEAR SCANNER

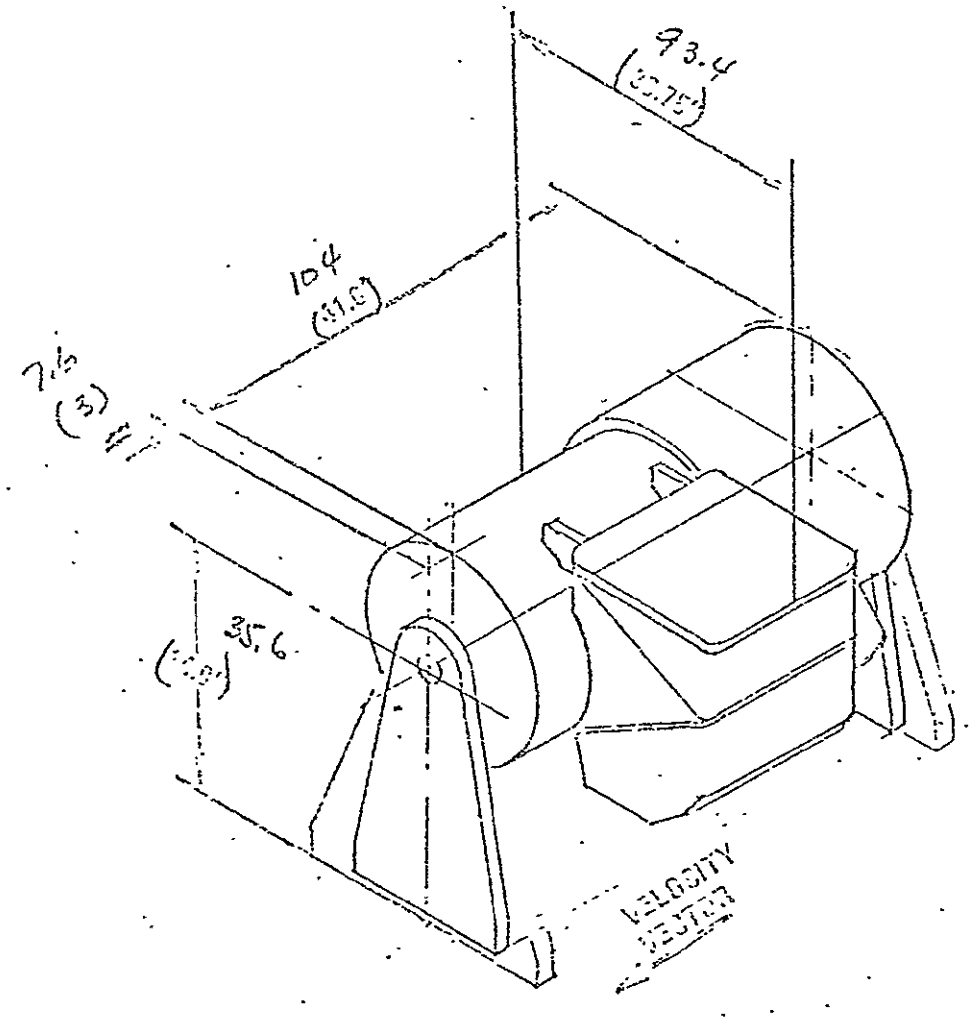

ORIGINAL PAGE IS
OF POOR QUALITY

arrangement located in the optical system. The non-linear scan is monitored by an optical scan monitor defining start of scan, end of scan, and an insertable mid-scan indication in the data.

The optical system is comprised of the scan mirror assembly, the telescope assembly, and the aft optics assembly. The scan mirror causes the IFOV to sweep across the swath. It needs to scan only half of the angle of the full field-of-view because of the angle-doubling effect that occurs at reflection. The mechanism has a nearly symmetrical scan pattern; i.e., the west to east forward scan and east to west reverse scan are similar. The departure of the sc the ideal sawtooth shape must be known and repeatable in order to correct for ge metric accuracy. The fact that the actual shape is different in the forward and reverse directions adds complexity to the ground processing.

A scan monitor assembly is used to produce signals at start, center, and end of scan. This system consists of a gallium arsenide laser diode emitter, an optical projection system, a series of reflectors, and a pair of detectors. The accuracy in measuring the scan position is 0.5 μ sec which corresponds to one-tenth of an IFOV.

The telescope assembly includes primary mirror, the secondary mirror, a folding mirror for directing the beam into the aft optics assembly, and the telescope structure which provides stable, accurate support of the optical elements and the Image Motion Compensator (IMC). The IMC mechanism must produce an offset of the optical beam in the direction of the spacecraft travel by an amount related to the IFOV, the telescope focal length, and the number of detectors per array. The net effect is to compensate for the tilt in the uncompensated ground scan pattern due to spacecraft motion (Figure A-12.

ORIGINAL PAGE IS
OF POOR QUALITY

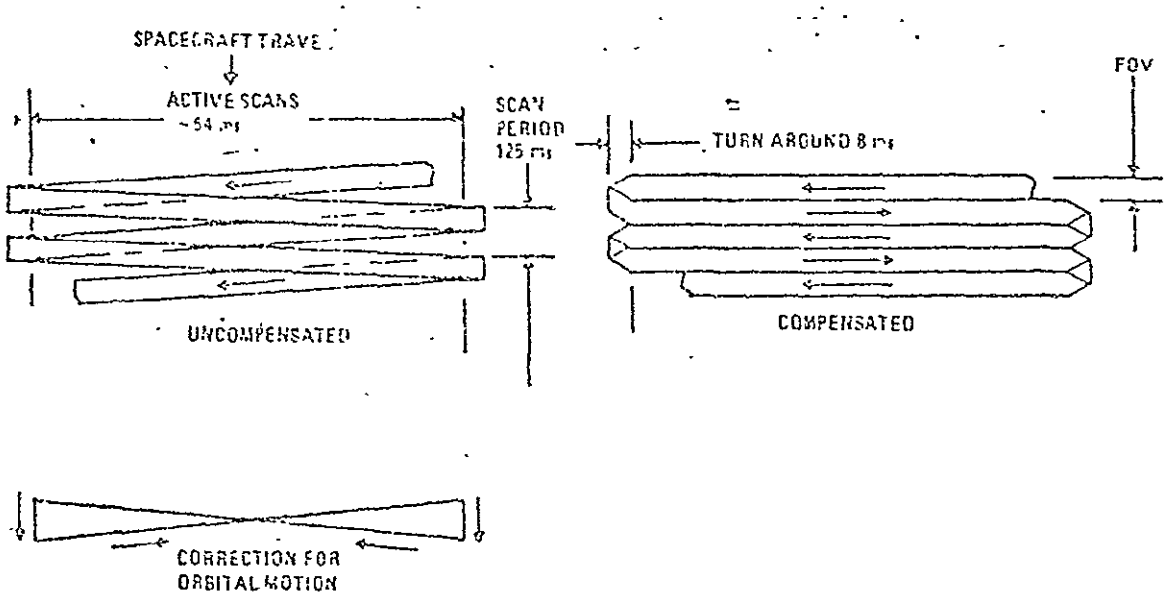

Figure A-12 Uncompensated and Compensated Ground Patterns

ORIGINAL PAGE IS
OF POOR QUALITY

Several requirements are placed on the mechanism chosen to provide IMC such as minimal change in optical path length and constant angle of incidence on the detector plane. The design concept for the IMC uses two rotating flat mirrors in the convergent beam of energy located near the image plane to minimize the magnitude of the scanning motion. These mirrors are driven by a function generator and servo control to compensate for the spacecraft v/h motion during each scan and resetting at the end of each scan in preparation for the next.

The aft optics assembly contains a number of optical/electronic components. These components must be accurately positioned relative to one another and to the telescope structure, and yet movable by the two commandable focus drives (if commandable drives are found necessary).

The focal plane configuration is designed such that the visible and near-IR spectral bands are imaged directly onto individual silicon arrays. Filters placed directly in front of the arrays are used for spectral bandpass selection. The diode elements provide the individual field stops for defining the IFOV.

Energy for the infrared bands passes through a focus at respective IR mask openings and is reimaged by a relay lens system. The detector elements provi the field stops. The relay accomplishes the transfer of energy from the telescope plane to the location of the cooler and reduces the field stop size so that detector area and noise can be reduced.

Each of the spectral bands is physically separated from each other in image s (and therefore object space). Thus, they are not simultaneous, and coinciden is achieved by the scanning motion and subsequent matching of samples.

For radiation calibration a lamp source is available and is reflected onto the detectors by moving a small mirror into the field-of-view. Issuing a radiation calibration command causes the lamp to be powered by a constant current supply.

The major scanner design modification required to the EOS design concept in order to make the scanner compatible with SEOPS mission objectives provides for a variable frequency scan mirror drive. With a fixed scan angle and zero scan overlap, the scan mirror frequency increases as orbital altitude decreases. This relationship is shown in Figure A-15 . Data rate will also increase in the manner described in the previous section. Thus, the electronics and interface with the tape recorder would need to be designed for the maximum data rate (which occurs at the minimum altitude), and over-sampling will occur at higher altitudes.

The increase in scan mirror frequency does not appear to present any mechanical problems down to an operational altitude of approximately 200 n.m.

The only available data from Hughes is shown in Figure A-14 . These two case indicate the frequency of approach to instability occurs at approximately 18 H The baseline aperture is 40 cm which lies between the 38 cm case and the 43 cm case shown. There is, therefore, confidence that this modification will be straightforward.

For altitudes below 200 n. miles it would be possible to modify the focal plane configuration to increase the IFOV per detector, thereby decreasing the scan frequency requirement. For example, in order to maintain a maximum scan mirror frequency of 18 Hz at a 100 n. mile altitude the IFOV would need to

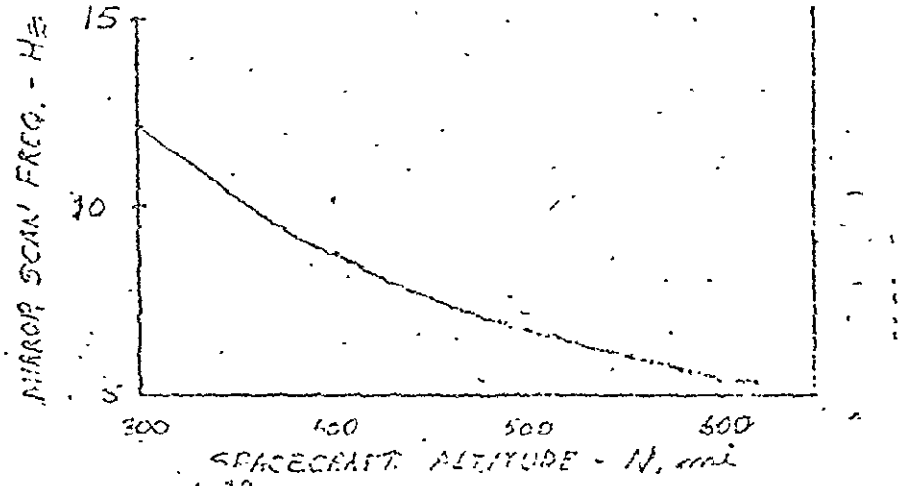

A-13

FIG. — MIRROR SCAN FREQUENCY — ALTITUDE FOR ZERO UNDERLAP/OVERLAP

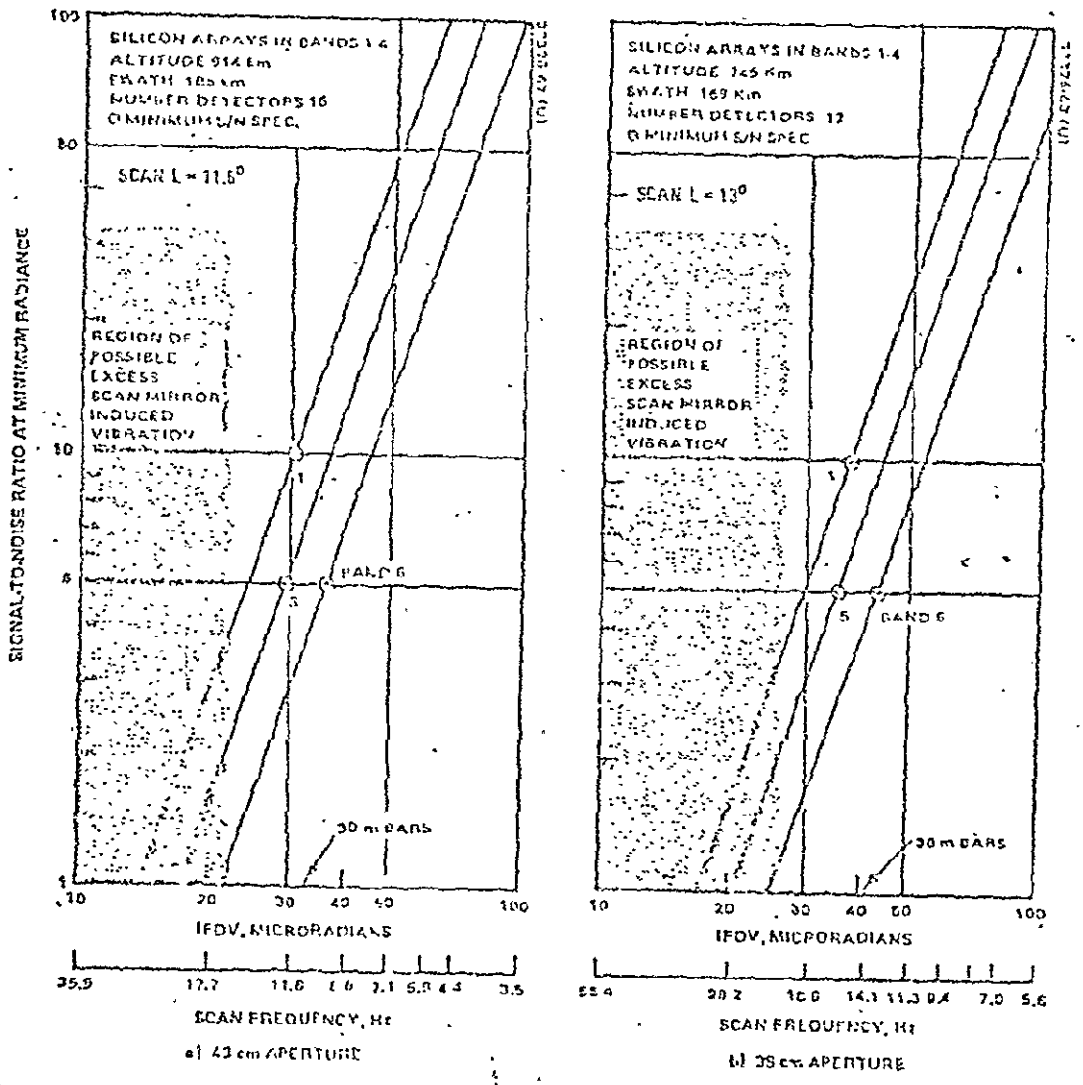

Figure A-14

SCAN FREQUENCY LIMITATIONS

ORIGINAL PAGE IS OF POOR QUALITY

be increased to approximately 70 μrad as compared to the nominal 35 μrad. This would still provide HIGH ground resolution.

The other modifications required for SEOPS operation are similar to those discussed for the image plane conical scanner. The passive radiative cooler needs to be replaced with a solid cryogen, Joule-Thompson or closed cycle cooler. Off-nadir pointing capability can be accomplished by rotating the whole instrument about its optical axis (see Figure A-11). The capability of adapting spectral bandpasses within the total detector response for speci missions can be provided by changing the optical bandpass filters in the focal plane configuration.

ORIGINAL PAGE IS
OF POOR QUALITY

ATS DATA PROCESSING

Data Editing and Quality Assessment

An assessment of the received data is necessary to identify regions of valid data and determining characteristics for data cataloging and future processing scheduling. Parameters to be determined include data quality, (i.e., bit error rate), cloud cover and failed detectors and other sensor problems related to tape area. In addition, a reformatting function must be performed to compensate for the multiplexing strategies and various sensor configurations which produce a serial data stream that has non-optimum pixel arrangements. For example, the output format must be band-to-band registered, spectrally interleaved, and linearized (all pixels along a straight line in sequence).

Radiometric and Geometric Correction

All ATS data will be subjected to radiometric and geometric correction.

The radiometric correction process consists of the removal of all sensor characteristics such as detector banding and sensitivity instability and data handling effects.

The geometric correction will provide X and Y correction to an accuracy of approximately 15 meters, and the image data will be gridded with respect to a standard geographic projection (e.g., Space Oblique Mercator).

The ATS preprocessing will run as a two pass operation, as shown in Figure A-15

The first pass through the Data Processing Subsystem is performed at approximately real-time data rates and is primarily for the purpose of screening the data and extracting all the necessary information to perform the radiometric and geometric correction.

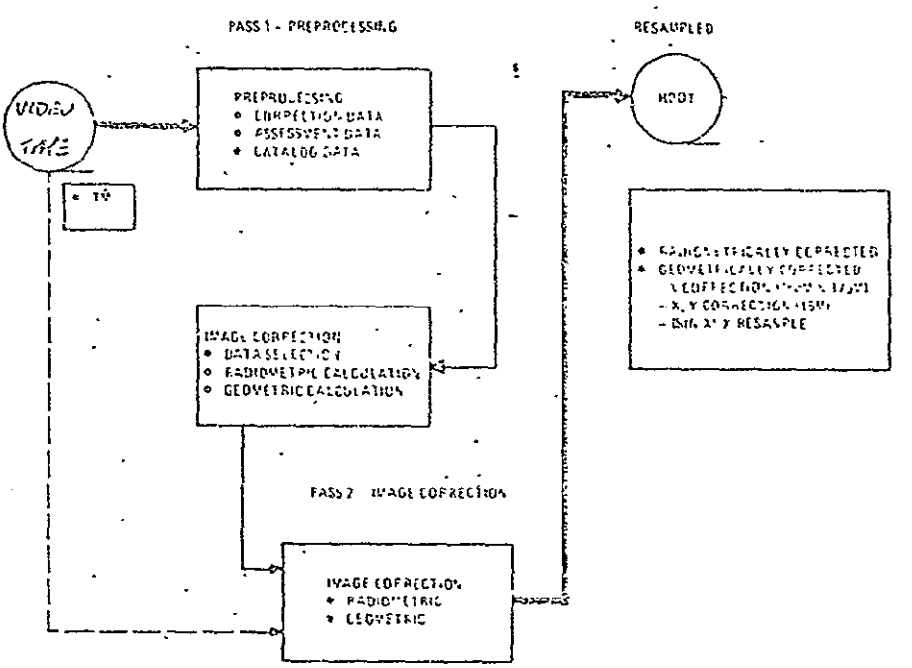

Figure A-15. Standard Processing Functions

A functional flow diagram of the first pass preprocessing function is shown in Figure A-16. The data stripping and timing modules perform basic functions of stripping and buffering timing data, quality assessment indicators, calibratic data, ground control point areas, and ancillary data which has been inserted intc the video stream on the spacecraft. The ancillary data includes sun calibration data, predicted ephemeris, rate and position attitude data, timing updates, aligr ment information and assessment information.

This data is all that is necessary to radiometrically correct the data and t geometrically correct the data to 450 meter location accuracy. The ancillary dat assessment data, ground control point areas, and cataloging information is storec on a disc for all data on the video tape. The video data is reformatted, has preliminary radiometric correction applied, and is presented on an image display to allow an operator to assist in data assessment and ground control point area

ORIGINAL PAGE IS
OF POOR QUALITY

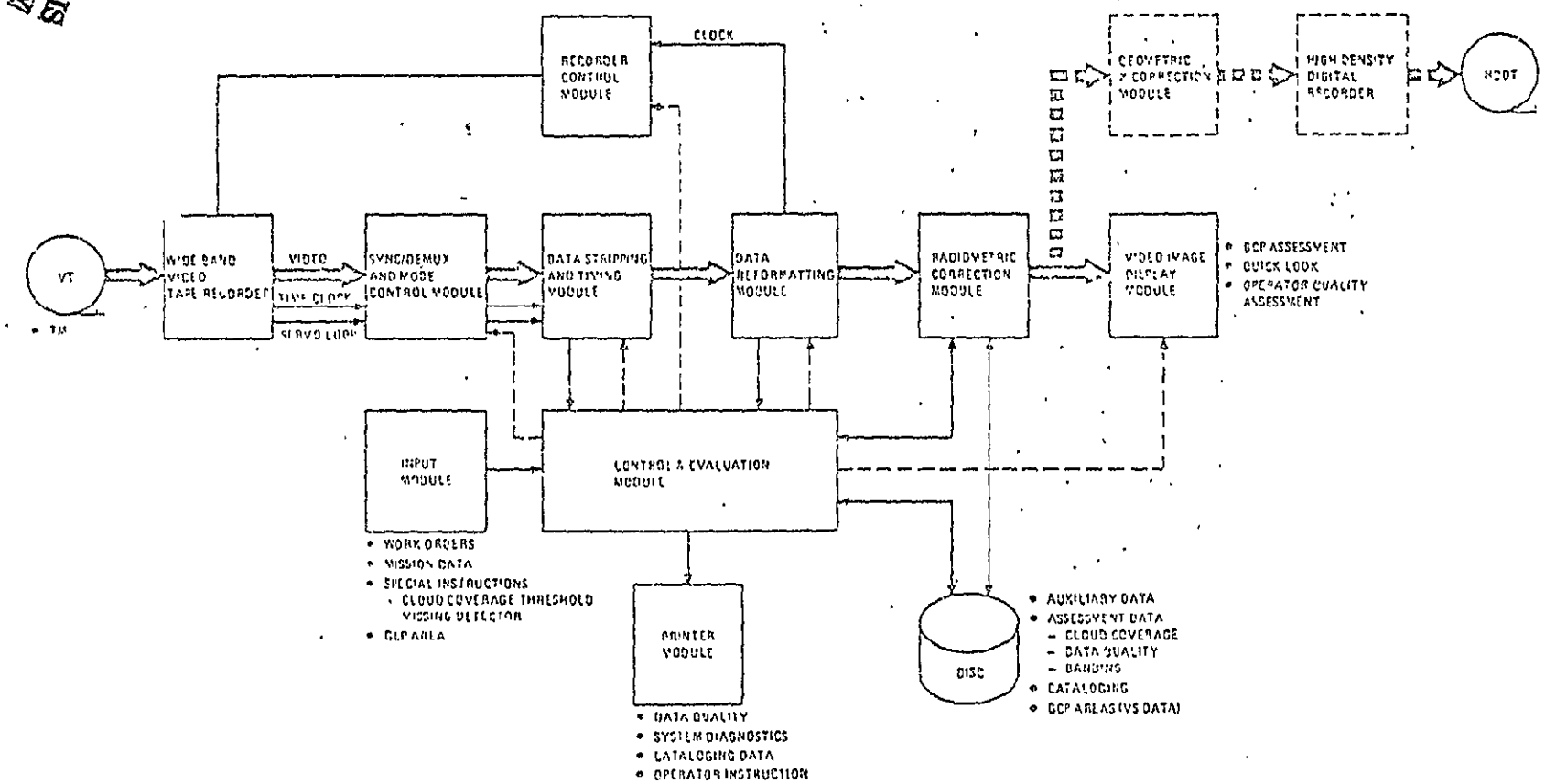

Figure A-16. Preprocessing Functional Flow - Pass I

selection. An output HDDT is not generated normally during this pass but one can be produced at a slower processing rate if a quick look at the data is desired.

Pass 2 - Image Correction. The functional flow of the second pass through the data is depicted in Figure A-17. During the rewind of the video tapes in preparation for the second pass, the control and evaluation module uses the results of the first pass to calculate geometric and radiometric correction data based on the ancillary data contained on the video tape, as well as the areas of valid data to be processed. Since the actual image correction of the data is more costly and slower to perform than is the preprocessing, throughput can be maximized by the elimination of unuseable data and tape gaps.

Resampling will be performed using $\frac{\sin x}{x}$, bi-linear, or cosine as the standard resampling algorithm. Catalog film of the corrected data will be generated as an off-line function independent of the standard radiometric and geometric correction processor.

The hardware configuration for the processor is shown in Figure A-18. It consists of the following elements:

- General purpose computer and standard peripherals,
- Special purpose processor,
- Input data preprocessor equipment, and
- Standard equipment.

The general purpose computer is a PDP 11/45 with 64K words of memory. It utilizes the RSX-11 D multi-task operating system. All ground control location calculations are performed in the computer but by the use of shuttle rate data all but one of these ground control correlations are over a very small area (i.e., about 3 x 3 pixels). The computer controls and sets up all the special

ORIGINAL PAGE IS
OF POOR QUALITY

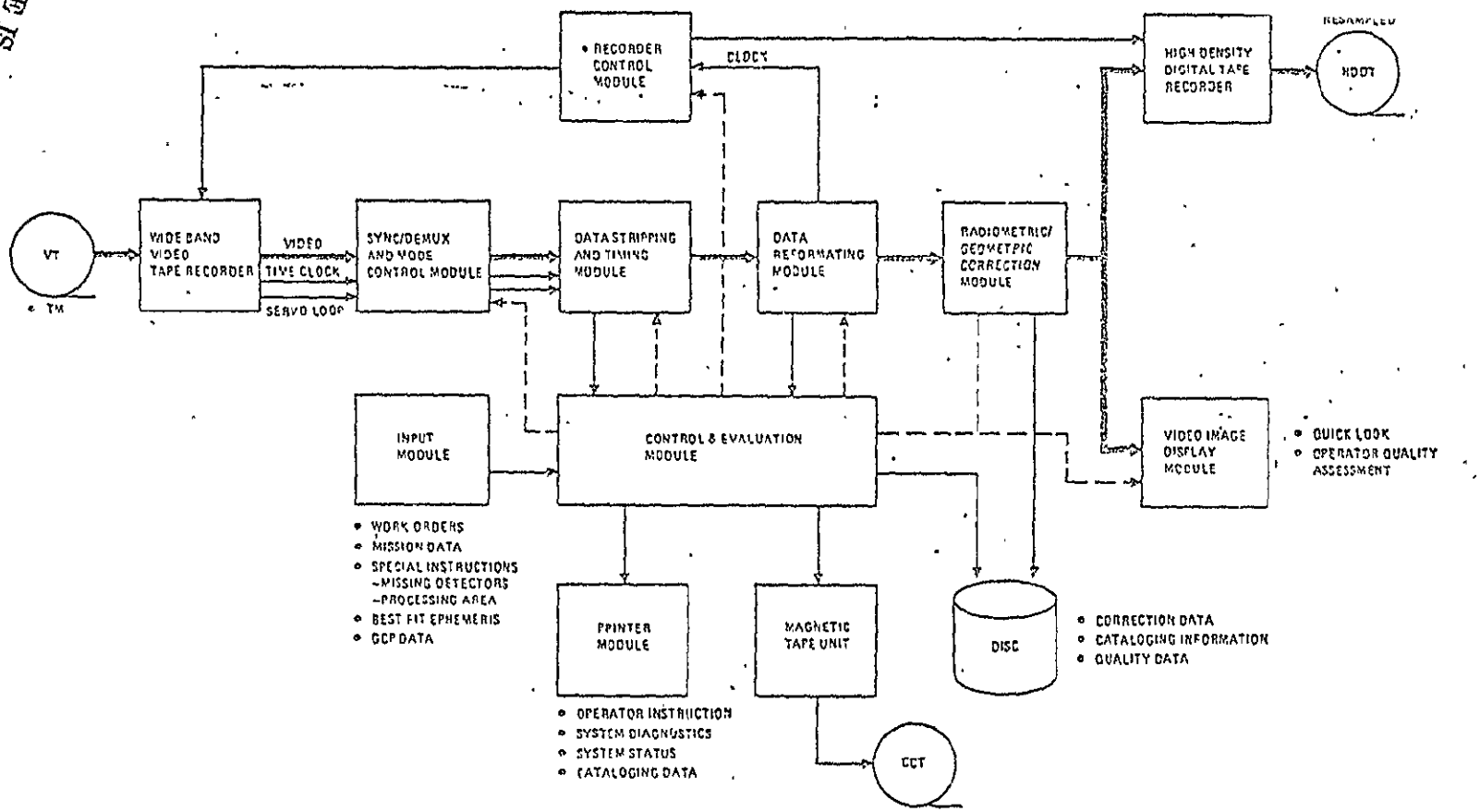

Figure A-17. Image Correction Functional Flow - Pass 2

hardware and performs all the calculations required to generate radiometric and geometric correction functions. The software programs are shown in Table A-8

Table A-8. Software Programs

Classification	Program Listing
Standard Software	• RSX-11D Operating System • PDP Diagnostic Software • Subroutine Library Software • Others
Special Purpose Processor Control & Initialization Software	• Special Hardware Control Software • Special Hardware Initialization Software • Data Stripping and Storage Software
Application Software	• Radiometric Correction Function Calculation Software • Geometric Correction Function Calculation Software • Ground Control Point Location Software

The special purpose processor consists of a radiometric correction module, a geometric correction and data reformatting module and an operation correction module. The radiometric correction module uses a 16 breakpoint table look-up function generator to perform sensor correction. The function generator is loaded with the proper coefficients from a solid state shift register buffer. The buffer can hold up to 19,200 sets of correction tables. The geometric correction and data reformatting module consists of an X-corrector, a solid state buffer memory and a Y-corrector. The X-corrector performs both the data reformatting and the along the scan resampling. The solid state buffer memory buffers the 200 lines of data required. The Y-corrector operates on the data in the buffer to provide two dimensional correction for the scenes where mapping in Space Oblique Mercator or another rotated projection is required. The aperture correction module consists of a 5-line solid state memory buffer and a 5 x 5 programmable hardware correlation

filter. The special purpose processor for the baseline configuration operates at 25 Mbps and processes up to 7 channels in parallel.

The input data processor consists of a sync/demux and mode control module, a data stripping and timing module and a recorder control module. The sync/demux module is a modification of existing hardware. The data stripping and timing module consists of the programmable line and elements counters, a solid state data buffer, a computer interface and a system clock. This module selects predefined ground control areas and sensor calibration data from the data stream, buffers the data and transfers the data to the PDP 11/45 general purpose computer for storage on the Image Data Disk. The recorder control module consists of two monitors which track the special purpose hardware input and output buffer registers, a difference circuit and two driver amplifiers. This module adjusts the tape speed of the input and output controllers to compensate for the different input and output data rates caused by the along-the-scan-line pixel distortion.

The standard equipment consists of a 120 Mbps Wideband Video Tape Recorder, a 40 Mbps High Density Digital Tape Recorder and a black and white 1000 line image display monitor which can operate in a frame or moving window mode. In addition, a CCT output capability will be provided so that direct output on CCT, or MDDT-to-CCT conversion may be performed.

Extractive Processing of ATS Data

Figure A-19 shows schematically, a candidate configuration of the required hardware for the extractive processing and analysis facility.

Corrected ATS data will be analyzed using multispectral techniques (signature analysis, classification, mensuration) for the three applications development missions and for the soil moisture mission. A typical system to perform this function is the General Electric's IMAGE 100.

ORIGINAL PAGE IS
OF POOR QUALITY

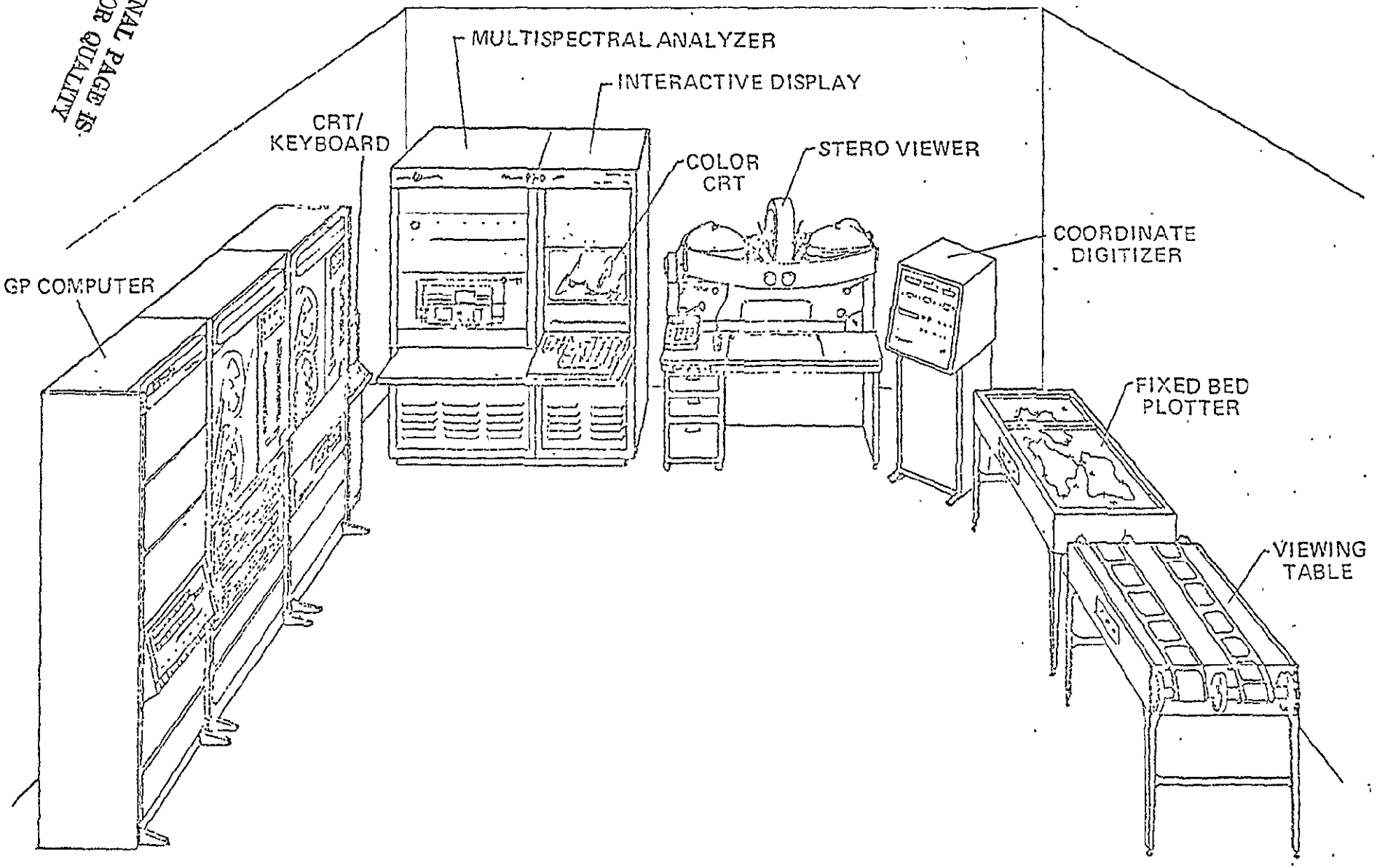

Figure A-19. Extractive Processing and Analysis

The basic function of the IMAGE 100 Interactive Multispectral Image Analysis System is to extract thematic information from multispectral imagery. It is accomplished via statistical measurement of the radiometric properties of the multispectral imagery in conjunction with the operator's visual and statistical interpretation of data presented to him. The IMAGE 100's information extraction capability is only as good as the operator's comprehension of the total information extraction process; a photo-interpreter/statistician user would be an ideal operator (assuming, of course, a complete grasp of the IMAGE 100 concept).

The definitions of some key image processing terms/concepts follows:

1. Training - The process of informing the system which object to analyze, and the system process of identifying the spectral properties of that object is called "training" ("Signature Extraction" is used interchangeably).

2. Classification - When the spectral properties of the object are found, the IMAGE 100 System scans the total image (pixel-by-pixel) and determines if the spectral properties of each pixel correlate with those of the object of interest. This testing process is called "classification".

3. Pixel - Picture element.

4. Theme - Class type, binary map, bi-level map, alarm, classification result. "Theme" is usually differentiated from "alarm" in the sense that themes are stored while the alarm is generated in real time by the set of spectral limits defining the original class.

5. Gray Level - A digital processing system quantizes or digitizes a continuous distribution of data values into discrete levels. When

referring to radiometric values of an image the digitized levels are called gray levels. This derives from the way a black and white photograph of a single spectral image represents different radiometric values as shades of gray.

6. Signature - A multispectral signature defines the characteristics of a given object or material as a function of its reflectance of electromagnetic radiation at a number of discrete wavelengths (visible and/or non-visible). "Cluster" is often used synonomously (see Figure 5.1-20). A multi-feature signature may include spatial or other parameters in addition to the spectral signature.

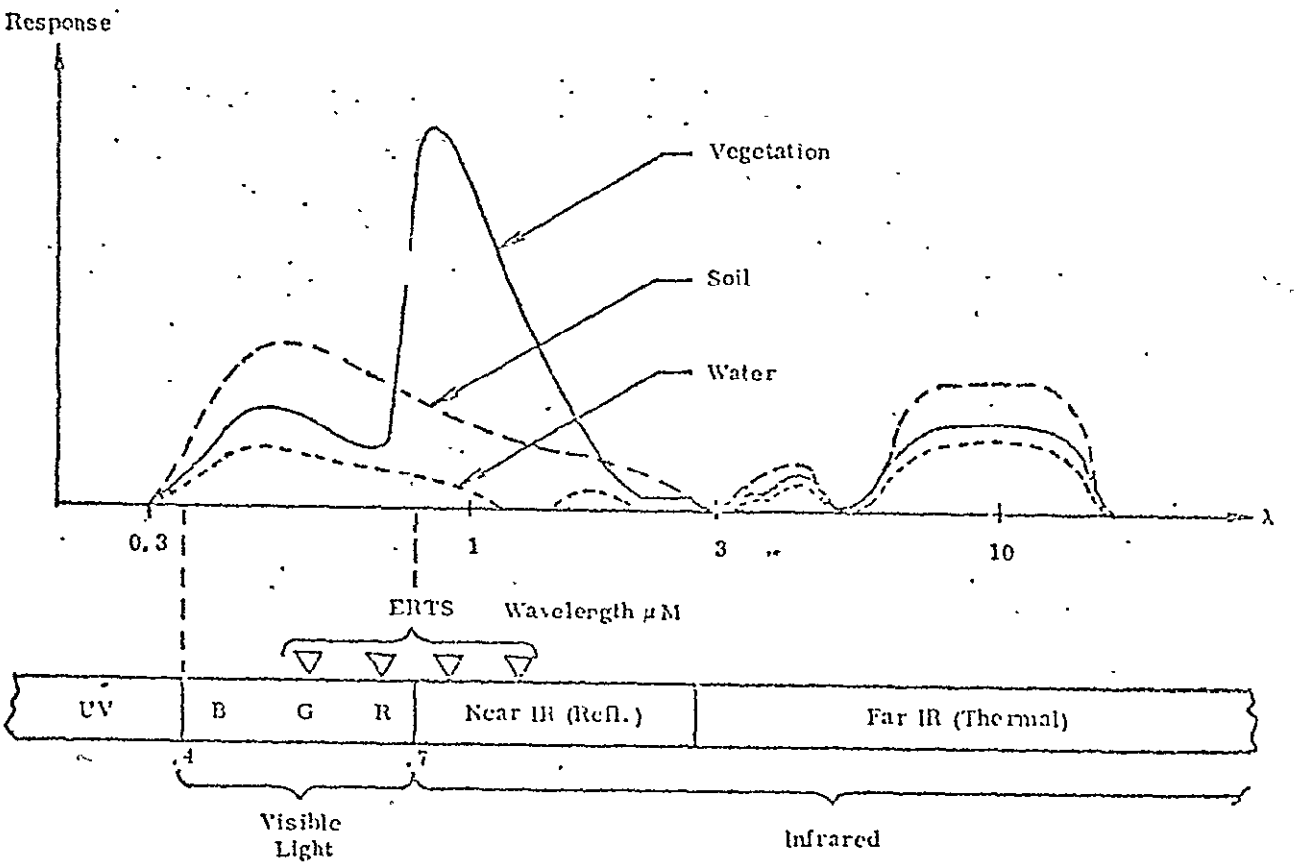

Figure A-20. Typical Material Signatures

7. Training Site - A spatial area, usually consisting of a homogeneous object or material type, which is used as the data base for determining the object's spectral signature.

8. Histogram - A frequency distribution. In the IMAGE 100, gray levels are plotted against pixel counts (enclosed within the training area only).

9. Parallelepiped - The set of gray levels describing a region in spectral space. In two dimensions, 2 pairs of upper and lower gray level limits describe a rectangle; in three dimensions, 3 pairs describe a parallelepiped; in four dimensions, 4 pairs describe a hyperparallelepiped. Often used synonomously are the terms "cell" and "hypervolume".

10. Maximum Likelihood Rule - A statistical decision criteria to assist in the resolution of overlapping signatures; histogram comparisons are the basis of the criteria.

11. Preprocessor - As applied to the IMAGE 100, this refers to data processing of the raw multispectral imagery prior to signature extraction and classification.

12. General Purpose Transformation - This is a preprocessing function which performs rotation of axis in spectral space. The transformation has three modes of operation: 1) all axes are rotated 45 degrees, 2) all axes are rotated to align with machine calculated eigen vectors, and 3) axes are rotated to user specified angles.

13. Ground Truth - Data which have been acquired via field tests, high resolution remote sensors, etc., and used as control information by

the user during the information extraction process.

14. Channel - Dimension, feature, wavelength, band, video axis, when used as descriptors. Specifically, channel refers to a one dimensional set of gray levels which usually represent a single spectral image.

15. Cluster Display - The display of histogram data is in 2-dimensional format; i.e., two bands are cross-plotted in terms of log base 2 of the pixel counts contained within the cells. Scattergram is used synonymously.

16. Cell - A cell is described by N pairs of upper and lower density thresholds. For example, when N = 1, a cell is defined between two gray levels; when N = 2, a cell can be described as a rectangle in signature space; when N = 3, a cell is a parallelepiped. A resolution cell is the smallest definable cell based on user-selected density quantization intervals (i.e., the "effective quantization"). A one dimensional resolution cell is identical to one gray level.

The thematic extraction process is achieved via the following techniques in approximately the sequence as presented below:

1. The multispectral image to be classified into themes is loaded onto the refresh device.

2. Preprocessing functions and display controls are selected and adjusted for visual enhancement of area(s) of interest. Image enlargement or magnification can also aid this visual discrimination process.

3. A training site is identified by use of the cursor. If a geographically contiguous training site has been selected, the cursor is adjusted in both size and shape to fit within the site boundary.

If it is non-contiguous, any number of cursored areas may be combined by using the theme synthesizer function. Note that a single pixel may be identified as the training site by selecting the cross-hair cursor mode and by formatting the image in 2x format or greater.

4. The training site signature is now extracted via the "1-dimensional" training procedure. The histogram is acquired for each dimension individually; upper and lower limits are selected for each based on user specified rejection levels (i.e., percent of area under the histogram curve). This set of limits defines the multi-dimensional parallelepiped which is the first cut approximation to the training site signature.

5. The classification of the entire image is immediately performed following completion of the one-dimensional signature acquisition. The alarm is displayed on the CRT; errors of commission and/or omission are evaluated.

6. Step 5 may be adequate for certain class types. If not, the user may enter, at his option, any combination of several different modes of operation:

   - One-dimensional histogram modifications
   - Interactive signature acquisition
   - Multidimensional signature acquisition.

   Or, he may choose to pick a different training site and repeat the entire procedure. The new training site can be combined with the original site or used alone. Previous thematic results can also be used as training sites.

7. Once the N-dimensional histogram has been developed, the user has many options available to him to further exploit the data. They include:

   - Histogram displays
   - Histogram thresholding
   - Cluster synthesis
   - Factor analysis

8. Signature Extension - Signature extension refers to the ability to extend classification over large geographical areas based on relativ small training sites. Special purpose "rationing" hardware in IMAGE 100 aids this signature extension function at display rates.

The three IMAGE 100 ratioing techniques selectable by the user are:

$$\frac{S_i'}{S_j'} \quad \text{(ratio)} \tag{1}$$

$$\frac{S_i' - S_j'}{S_i' + S_j'} \quad \text{(difference over sum)} \tag{2}$$

$$\frac{S_i'}{n} \quad \text{(Normalization)}$$

$$\sum_{i=1}^{n} S_i' \tag{3}$$

Where i and j = 2 adjacent channels (i.e., i = j, j = i + 1)

Multiplicative systematic errors are not present in any of the related signals. The second technique, Equation 2, also tends to reduce the additive errors and has a computational advantage of being bounded (i.e., between +1 and -1).

The third technique, Equation 3, is referred to as normalization and is applied when the systematic errors are approximately independent of wavelength; normalization is also numerically bounded.

Interpretation of Photographic Imagery

Photointerpretation is essentially a manual process, relying on the skill and experience of a trained photointerpreter, with some machine assistance, to extract the desired information.

The data processing requirements of the three applications developments of the three applications development missions require photointerpretation to perform the following functions:

- Evaluate stereo pairs to determine and map geographically lineaments and other features.
- Perform aerial and linear measurements on forest cores to determine cores extent and tree size.
- Evaluate photographic images for cultural and other indicators of urban land use.

These functions will be performed manually using such equipment as viewing tables, a stereoplotter and coordinate digitizer and flatbed plottes as aids in interpretation and presentation of results. In addition, the extractive analysis system (IMAGE 100) will have the capability of accepting inputs from film digitizers and the coordinate digitizers to permit registration and comparison of photographic and ATS imagery.

APPENDIX B
INFRARED SPECTROMETER

The Infrared Spectrometer (IRS) is designed to obtain spatially independent IR radiances (that are unbiased with respect to cloud condition) at sufficient spectral and spatial resolutions so that the data may be used for determining the thermal structure of the earth's atmosphere. This instrument is a modification of the sensor currently in operation on Nimbus F.

Basically, IRS is a filter wheel device which scans normal to the orbit plane with a scan angle of $\pm 36.9^{\circ}$ about the nadir for earth view. The optical telescope focuses the received radiant energy onto two cooled detectors (radiant cooled to $120^{\circ}K$) and a photodiode which is used as a visible energy channel. Prior to reaching the detectors, the energy is spectrally separated into long wave (LW), short wave (SW), and a visible component, chopped and bandpass filtered. The three detectors and 17 spectral bandpass filters are used to define the following channels (values are given in microns):

a) Long Wave Channels (10)
   - Seven (7) CO_2: 14.96, 14.71, 14.49, 14.23, 13.97, 13.64, 13.35
   - One (1) window: 11.11
   - One (1) ozone: 8.16
   - One (1) H_2O vapor: 6.71

b) Short Wave Channels (6)
   - Five (5) CO_2: 4.57, 4.53, 4.46, 4.41, 4.24
   - One (1) window: 3.70

c) Visible Channel (1)
   - One (1) visible: 0.69

ORIGINAL PAGE IS OF POOR QUALITY

It is noted that the above channel definitions are nominal only and the actual channel definition will be determined by the specific selection of

the filters used with that instrument. Provisions are also made in IRS to permit on-board calibrations. This is accomplished by periodically pointing the IRS acquisition scan mirror at two internal targets (temperature-controlled black bodies) and a view of cold space.

An outline drawing of the IRS instrument is shown in Figure B-1. The optics are designed to view the earth with a 1.5° instantaneous field of view (IFOV). Since the scan mirror stepper motor step is 1.8° between scan elements, the satellite, for earth scan at a 600 nm circular orbit, will yield a 42 scan element pattern per earth scan line as shown in Figure B-2 The internal logic is arranged such that after 20 earth scan lines, the scan mirror is directed to view two internal black bodies and space for three equivalent calibration scan lines (With the instrument commanded to calibration inhibit, the input view will be a series of repeated earth scan lines).

A high level block diagram of the IRS instrument is shown in Figure B-3. Input energy from the earth view is directed onto the stepped scan mirror and thence through a telescope to the three detectors. During transit to the detectors the energy is spectrally separated and chopped. The outputs are then chopped, synchronous demodulated, and integrated as dictated by the data scan programmer. The data is then serially A/D converted and stored in the data accumulator for subsequent readout.

The output Bi phase (BI Ø) data stream contains among other information, mode status, time code, scan element number and parity code.

SEOPS Modifications

Seventeen spectral channels were considered a full complement for definition of atmospheric conditions from ground level to 2 mb. The seventeen filters

ORIGINAL PAGE IS
OF POOR QUALITY

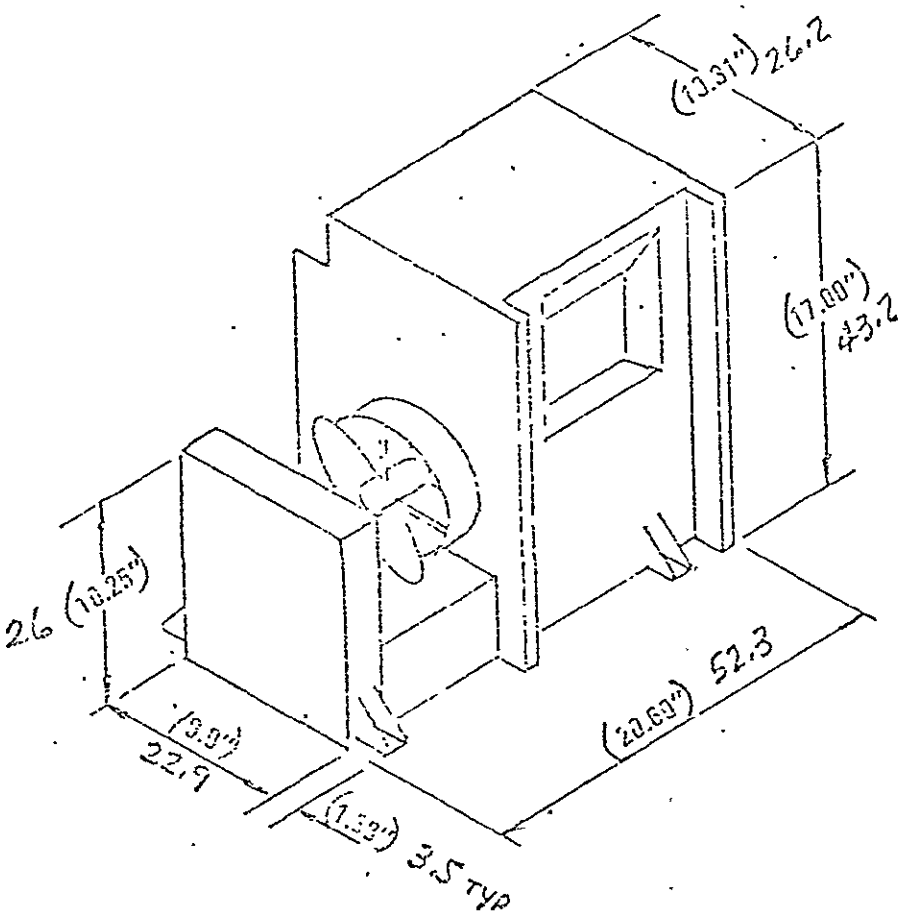

INFRARED SPECTROMETER
OUTLINE DRAWING

FIGURE B-1

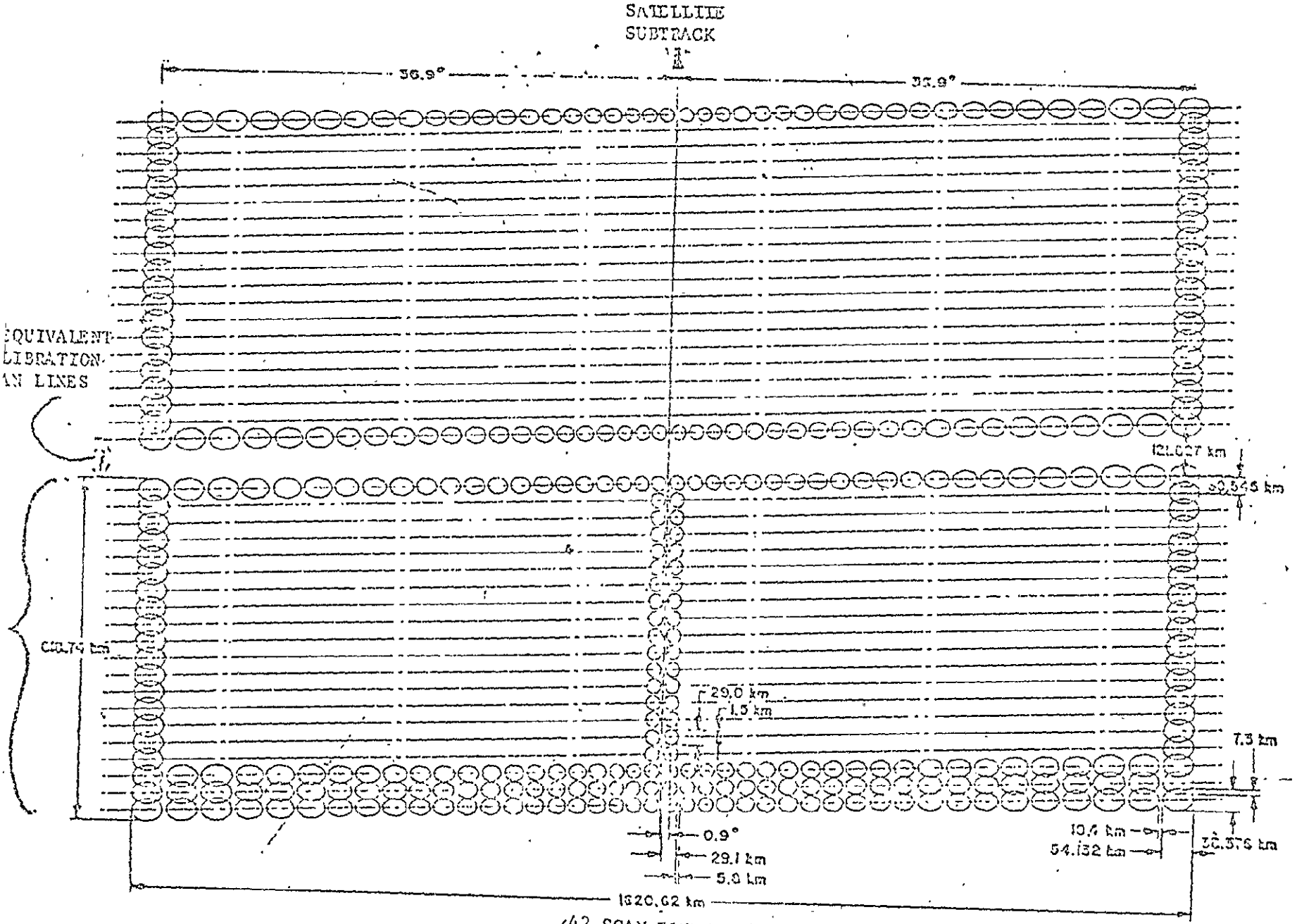

(42 SCAN ELEMENTS)

Figure B-2 Scan Grid Configuration

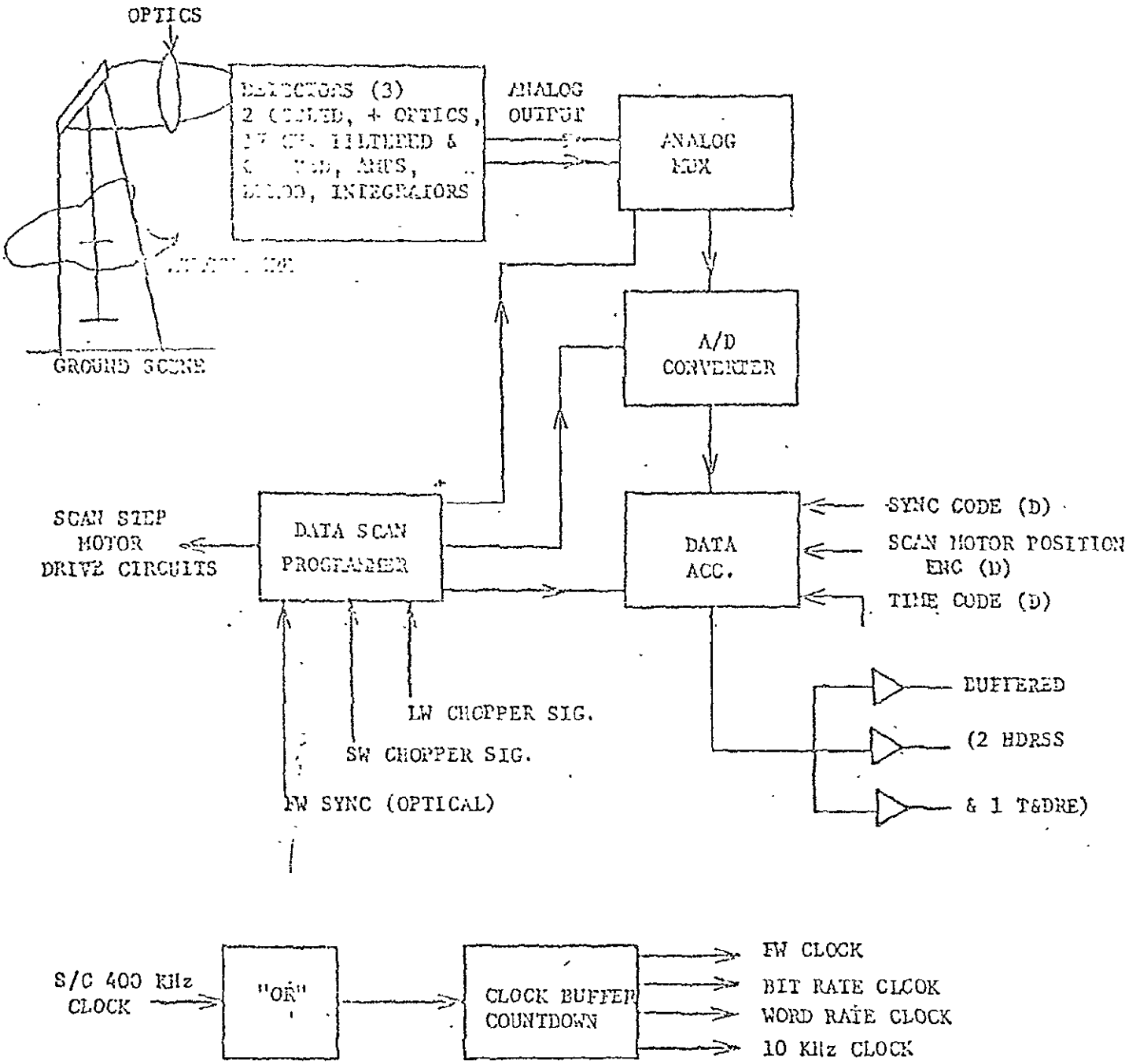

FIGURE B-3 HI-LEVEL IRS BLOCK DIAGRAM

ORIGINAL PAGE IS OF POOR QUALITY

on the IRS can be changed in a laboratory without a complete realignment of the instrument, offering possibilities of filter changes between flights to support other user needs. A change in the system could permit a total of as many as forty filters on a filter wheel with combinations of visible and shortwave bands (.4 to 1.1μ and .3 to 5μ) totalling 20, and as many as 20 longwave (6 to 15μ), depending on the trade-off of spectral bandwidth and radiant sensitivity. For this requirement the data processing system would need to be revised, but the changes could be maintained within the general framework of the IRS.

The present IRS cooler subassembly is a modular unit separable from the main frame. This subassembly contains the two cooled detectors and their passive cooling structure. The only optic elements are heat blocking windows (Irtran and Sapphire) on the first stage cooler (cone). For the SEOPS configuration this housing would become a vacuum enclosure with a new detector mount for interfacing to the cryogenic cooling system. A typical closed cycle system is designed for similar applications and will be installed in the IRS cooler module. The choice of cooling method, whether open cycle cryogenerator, closed cycle, solid cryogen or dewar flask has not been made yet, and will depend most on the realiability of performance, ease of recharging, and cost.

The Nimbus F power source is -24.5 volts nominal and supplies three inputs to the IRS (F/C power, scan power, and electronics power). Since all of the IRS input circuits are isolated from chassis, the switch to a positive input would not be a problem.

An improved method of radiant energy chopping has been devised that eliminates the need for a separate longwave chopper blade. This modification would

eliminate a gear set that drives the longwave chopper and which has caused degradation of system performance by its gear mesh noise (jitter). It will be most noticeable as an improvement in shortwave signal quality.

Instrument Performance

A listing of the present radiant sensitivity, NEΔN, is given in Table B-1 with the anticipated sensitivity for the SEOPS model, where liquid nitrogen cooling may be presumed. The improvement in the longwave bands is dramatic, bringing the noise levels down to digitizing uncertainties (±.5 count). This should provide highly acceptable sounding information. It also indicates that narrower spectral bands could be accommodated or the number of bands increased.

A study of the IRS in Shuttle orbit indicates that the system should work very well. At a nominal altitude of 200 n. miles the 1.2° field of view interrogates a 7.65 km diameter area on the earth at nadir. The 1.8° steps are centered at 11.7 km at nadir, with the swath covering 600 n. miles (1120 km) of the surface. The scan lines are no longer contiguous with FOV center distance of 28 km at nadir along the track. Even with this limitation the system would provide excellent high resolution sounding data to correlate with Nimbus or TIROS sounders on polar orbits. Therefore, the scan pattern can remain unchanged.

Interface Requirements

1. Mechanical - The IRS configuration is shown in Figure B-4. In particular, the relative location of the scanning mirror assembly, cooling panel, clear field-of-view requirements, sun shield, and mounting locations are shown. A radiative cooler for maintaining the detectors at

TABLE B-1

IRS RADIANT SENSITIVITY

NEΔN (mw m^{-2} st^{-1} cm)

Instantaneous Field of View, 1.2°

Channel	Spectral Band (cm^{-1})	Width (cm^{-1})	SEOPS	Nimbus Orbit
1	669.1	2.8	.60	3.2
2	678.7	13.6	.25	.54
3	690.1	12.6	.16	.40
4	702.2	16.0	.14	.26
5	715.6	17.5	.16	.40
6	731.9	18.3	.14	.28
7	749.1	18.4	.14	.30
8	900.0	32.0	.06	.24
9	1223.8	63.4	.08	.14
10	1485.1	80.7	.05	.11
11	2190.1	22.4	.0020	.010
12	2211.9	22.5	.0015	.0029
13	2242.5	22.9	.0020	.0049
14	2274.7	35.1	.0015	.0018
15	2357.2	22.1	.0015	.0026
16	2692.4	296.9	.0010	.0010
17	14443.0	892.2	.038*	
Patch Temp			80K	118K

* % ALBEDO

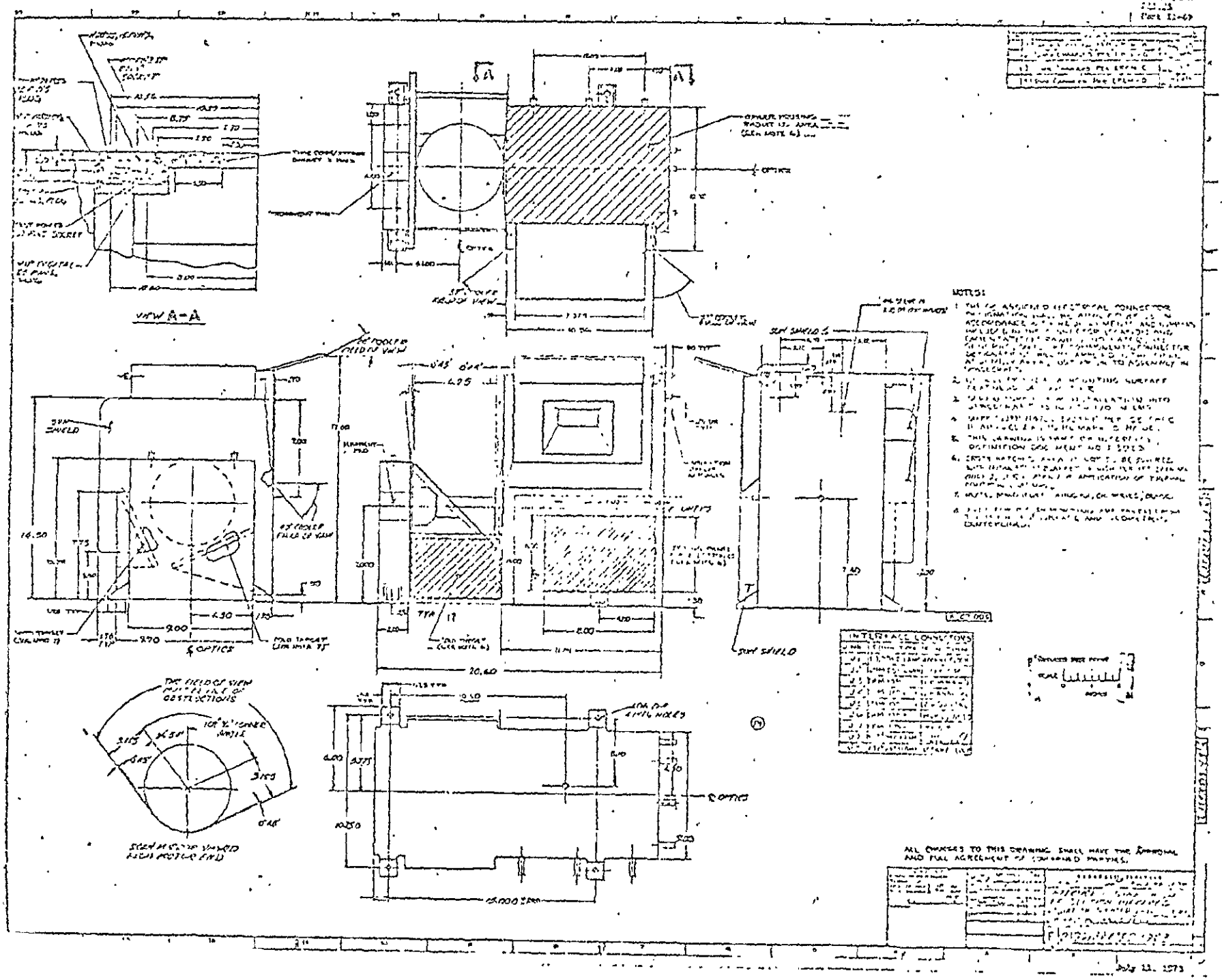

ORIGINAL PAGE IS OF POOR QUALITY

an operating temperature of 120°K is shown; however, this would be replaced for SEOPS with either a closed cycle or solid cryogen cooler. The key optical and mechanical parameters are shown in Table B-2

Figure 3.2-22 shows the view factor drawing in the lower left corner. A 104.1° total view angle is required to permit viewing of space for a reference point. The space look is 65.7° from nadir. At an altitude of 200 nm the horizon is 70.9° from nadir, in which case the scan mirror would see the earth. Calibration would then be limited to the use of the two internal targets at 290°K and 255°K. The system could be modified to see space by removing the 255°K target.

A related problem is that of positioning the system on the Shuttle at a location that permits viewing space. If a space look is not convenient or possible, the internal targets are sufficient for system calibration. Reflective shields may need to be added to the system to prevent earth and space vehicle heat input to the 255 K target.

2. Electrical - Figure B-5 shows the electrical block diagram for the IRS instrument. As can be seen from this diagram, the outputs of the three detectors are fed through signal processing networks to the analog multiplexer. The output of the analog multiplexer is then converted to a digital signal in the analog-to-digital converter and then stored in the data accumulator.

The power input to the system is through three (3) power input filters designated Electronics, Filter/Chopper, and Scan Motor input filters.

Also shown on the block diagram is the various telemetry outputs and command inputs. The key IRS electrical parameters are given in Table B-3

TABLE B-2

IRS OPTICAL/MECHANICAL PARAMETERS

OPTICAL

- Spatial Resolution: 26 milliradians
- Earth Scan Angle: $\pm 36.9^{\circ}$ Ref. Nadir
- Main Optics: 5.9" C.A., f/1.7
- Detectors: LW HgCdTe (photoconductive)
  SW InSb (photovoltaic)
  Visible SiPD
- Chopping Frequency: LW 900 $\pm$ 50 Hz; Sw/Vis. 390 $\pm$ 10 Hz
- LW/SW Operating Temp: 120°K

MECHANICAL

- Size: 52 x 26 x 45 cm
- Weight: 33 Kg
- Uncomp. Angular Momentum: 0.01 ft. lb. sec.
- Temp. Range: $+5^{\circ}$C to $+45^{\circ}$C
- Scan Mirror Step: 1.8°

TABLE B-3

IRS ELECTRICAL PARAMETERS

- Power: 23 watts avg. at 28 VDC (not including instantaneous peak while stepper motor steps)
- Overvoltage: Survive continuously - 20 to 34.5 volts DC
- Clock Signals Required: 400 KHz
- Data Rate: 3339.83 Bi Ø Bits/sec.
- Number of Commands: 20
- Digital B Tlm: 10
- Analog Tlm: 23

ORIGINAL PAGE IS
OF POOR QUALITY

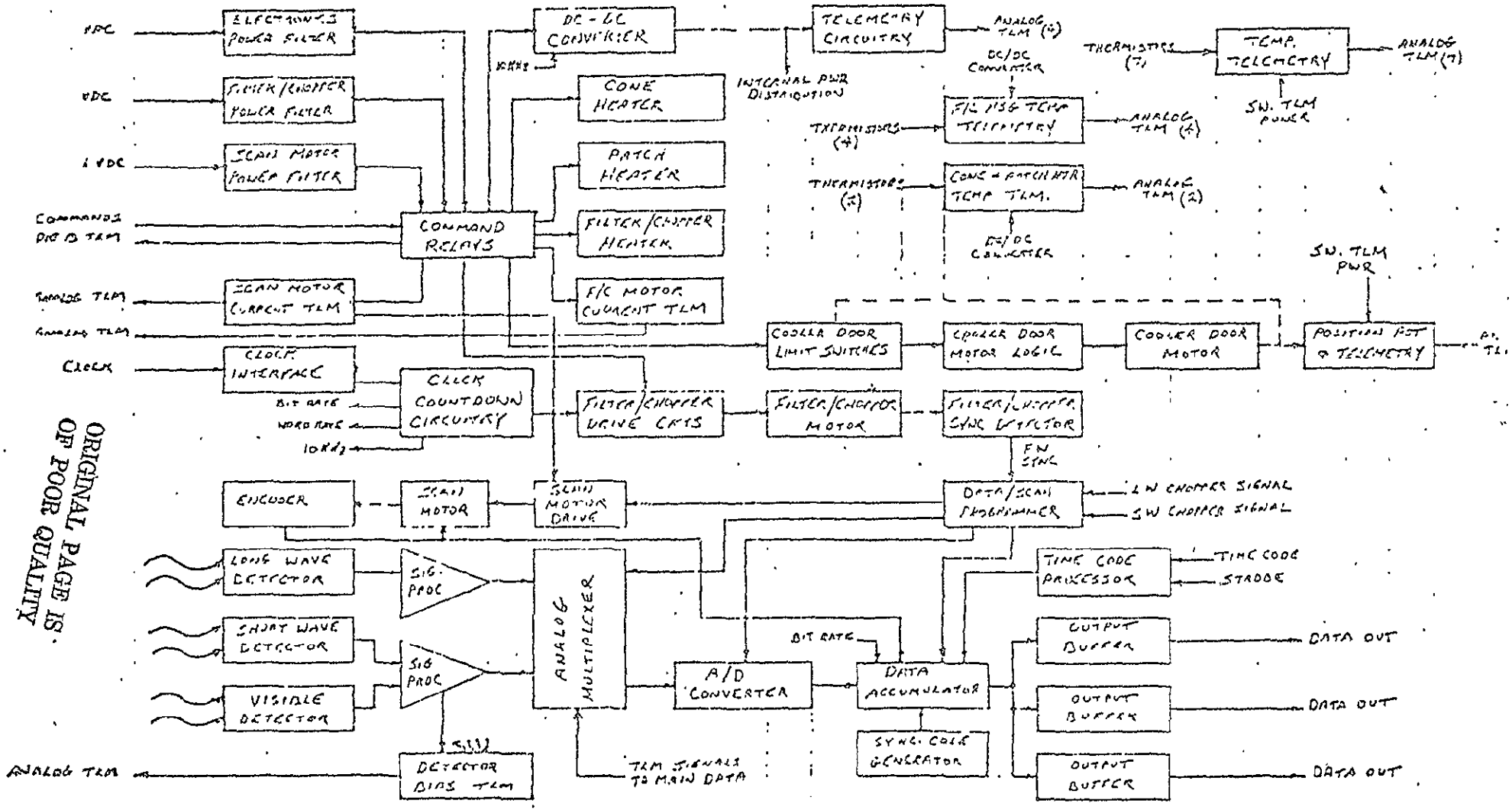

FIGURE B-5 IRS BLOCK DIAGRAM

ORIGINAL PAGE IS OF POOR QUALITY

telemetry functions as indicated in Tables B-4 and B-5.

The IRS experiment can be operated in any one of four (4) distinct modes as follows:

(a) Minimum Satellite

The purpose of this mode is to maintain the experiment in a "standby" status while consuming a minimum amount of electrical power. The command status is as follows:

Filter/Chopper Motor OFF

Scan Motor OFF

Electronics Power OFF

Cooler Cone Heater OFF

Patch Heater ON

Filter Wheel Heater ON

Cooler cover can be either "stored" or "deployed."

(b) Launch

The purpose of this mode is to keep the scan motor and the filter/chopper motor running during the launch to reduce the likelihood of brinelling the mechanism bearings. The command status is as follows:

Filter/Chopper Motor ON

Scan Motor ON

Electronics Power OFF

Cooler Cone Heater OFF

Cooler Cover "Stored"

Patch Heater OFF

Filter Wheel Heater OFF

TABLE B-4

IRS COMMAND FUNCTIONS

Filter/Chopper Motor ON

Filter/Chopper Motor OFF

Scan Motor ON

Scan Motor OFF

Electronics ON

Electronics OFF

Filter/Chopper Mode High

Filter/Chopper Mode Normal

Cooler Cone Heater ON

Cooler Cone Heater OFF

Cooler Cover Enable, Store

Cooler Cover Enable, Deploy

Cooler Cover Store

Cooler Cover Deploy

Patch Heater ON

Patch Heater OFF

Filter Wheel Heater ON

Filter Wheel Heater OFF

Scan Mode OFF

Scan Mode ON

TABLE B-5

IRS TELEMETRY

TLM FUNCTION	SIGNAL TYPE	SAMP SEC.
FILTER/CHOPPER MOTOR ON/OFF	DIG B	3/16
SCAN MOTOR ON/OFF	DIG B	3/16
ELECTRONICS ON/OFF	DIG B	3/16
FILTER/CHOPPER MODE NORM/HIGH	DIG B	3/16
COOLER CONE HEATER ON/OFF	DIG B	3/16
SCAN MODE OFF/ON	DIG B	3/16
COOLER COVER ENABLE STOR/DEPLOY	DIG B	3/16
COOLER COVER STOR/DEPLOY	DIG B	3/16
PATCH HEATER ON/OFF	DIG B	3/16
FILTER WHEEL HEATER ON/OFF	DIG B	3/16
PATCH POWER	ALOG	1/16
+15VDC ELECTRONICS POWER	ALOG	1/16
-15VDC ELECTRONICS POWER	ALOG	1/16
+10VDC LOGIC POWER (UNREG)	ALOG	1/16
+5 VDC LOGIC POWER	ALOG	1/16
-15VDC TELEMETRY POWER	ALOG	1/16
DETECTOR BIAS (LWL)	ALOG	1/16
F/C MOTOR CURRENT	ALOG	1/16
SCAN MOTOR CURRENT	ALOG	1/16
COOLER COVER POSITION	ALOG	1/16
SCAN MIRROR TEMPERATURE	ALOG	1/16
PRIMARY TELESCOPE MIRROR TEMP	ALOG	1/16
SECONDARY TELESCOPE MIRROR TEMP	ALOG	1/16
F/C HOUSING TEMP #1	ALOG	1/16
F/C HOUSING TEMP. #2	ALOG	1/16
F/C HOUSING TEMP. #3	ALOG	1/16
F/C HOUSING TEMP. #4	ALOG	1/16
F/C MOTOR TEMP.	ALOG	1/16
RADIANT CONE TEMP.	ALOG	1/16
RADIANT COOLER HOUSING TEMP.	ALOG	1/16
PATCH TEMPERATURE	ALOG	1/16
BASEPLATE TEMPERATURE	ALOG	1/16
ELECTRONICS TEMPERATURE	ALOG	1/16

ORIGINAL PAGE IS
OF POOR QUALITY

(c) Pre-Conditioning

The purpose of this mode is to permit the experiment to reach the desired operational temperatures for the various elements prior to the actual data gathering sequence. The command status is as follows:

Filter/Chopper Motor ON

Scan Motor ON

Electronics Power ON

Cooler Cone Heater ON

Patch Heater ON

Cooler Cover "Stored"

Filter Wheel Heater ON

(d) Operate

This mode is used to gather sensor data from the fully operational experiment. This mode is the same as the pre-conditioning mode described above with the following exceptions:

Cooler Cone Heater OFF

Cooler Cover "Deployed"

APPENDIX C

CORRELATION INTERFEROMETRY FOR THE MEASUREMENT OF ATMOSPHERIC TRACE SPECIES (CIMATS)

PURPOSE OF THE EXPERIMENT

The CIMATS experiment is designed to provide for the obtaining, from an orbiting spacecraft, of measurements which will furnish data on gaseous trace atmospheric constituent densities. The experiment is designed for the remote measurement of the abundance of a number of these species. Each of these gases has different problems and hence different measurement requirements. It is not suggested that any one experiment can provide all data needed for the solution of all problems of pollutants and other minor species of the atmosphere or even that for one species. However, CIMATS is capable of making a variety of measurements helpful for these solutions. The approach suggested herein is to utilize an orbiting platform for mapping global concentrations and determining the vertical profiles via limb transmission.

The measurements of a wide variety of trace species in the atmosphere including those classified as pollutants are important for many current and future studies. Various anthropogenic processes, such as the incomplete combustion of fossil fuels used for the production of heat and light so prevalent in our present state of industrialization, generate numerous species which tend to build up in the atmosphere, changing its composition and thus affecting numerous processes important to mankind. It should be noted, of course, that species classified as pollutants occur naturally and are thus constituents of the natural atmosphere, but are referred to as pollutants when their concentrations are significantly, often drastically, increased by introduction of large amounts from anthropogenic sources. The importance of pollutants and their measurement has been discussed in detail in many places (Refs. 1, 2, 3, 4). The most important pollutants are NO, NO_2, N_2O, NH_3, SO_2, CO, CO_2, and CH_4.

CURRENT STATE OF KNOWLEDGE

Requirements for Pollutant Measurement

A number of attempts have been made to list requirements for pollutant measurements. In general, these have been concerned with very localized ground

level concentrations - that is, those which are of most immediate importance to society. Although the correlation interferometer can contribute to such measurements, the proposed experiment relates to remote satellite-based measurements. For such conditions, requirements for both tropospheric and stratospheric measurements have been given by the RMOP report (Ref. 5) and some of these are noted in Table C-1. The concentrations of the various pollutants vary drastically from the unpolluted levels (some of which are only roughly known) to levels of the order of a hundred times that of the background. Thus a wide range, as noted in the last column of the table, must be covered in any measurement.

In addition to the RMOP requirements, Table C-1 also list the capabilities of the correlation interferometer to make many of the desired measurements. It should be noted that the instrument could be adapted to measure various other pollutants and trace species - e.g., ozone, specific hydrocarbons, formaldehyde, nitric acid, etc. - but it is felt that the most important use of the correlation interferometer in the near future is for the measurement of those species for which its capabilities are noted in Table C-1.

In order to obtain data on both tropospheric and stratospheric densities by remote sensing techniques, two types of measurements are needed. One measurement is that looking downward to obtain the contribution of the gas through the troposphere to the ground by developing a map of the density of a column of the gas above the map locations. The other measurement is that which looks outward through the atmosphere toward the sun to obtain information on the vertical profile of the gas concentration in the stratosphere.

Capabilities of Instruments

Numerous techniques have been suggested for the remote measurement of pollutants. All the techniques involve the measurement of radiation to determine either its absorption or emission due to individual species. Most techniques operate in the infrared region of the spectrum since there most of the species of interest have distinctive spectra features, and further, the scattering in the atmosphere is not a major factor above 2μ. Further, since in the measurement of pollutants, effects of the gases near the ground are most important, the techniques are best when

TABLE C-1 REQUIREMENTS FOR POLLUTANT MEASUREMENTS AND CIMATS CAPABILITIES

Constituent	RMOP Measurement Accuracy Requirements For Gases In Troposphere* (ppb)	CIMATS Capabilities (Troposphere) Sensitivity (ppb)	CIMATS Capabilities (Troposphere) Wavelength (μ)	RMOP Measurement Accuracy Requirements For Gases In Stratosphere* (ppb)	CIMATS Capabilities (Stratosphere) Sensitivity (ppb)	CIMATS Capabilities (Stratosphere) Wavelength (μ)	Suggested Range (atm.-cm.)
CH_4	500	100	2.35	200	<100	2.35	2.5(1)+ - 2.2(1)
CH_2O	2	~2	3.5				
CO	10	10	2.35	10	10	2.35	1.7(2) - 8.7(0)
CO_2	500	3000	2.0		3	2.0	5.6(1) - 3.6(3)
H_2O				20%	10%	2.7	5.2(1) - 3.4(4)
NH_3	10	1	2.0		1	2.0	1.1(-4) - 7.2(-2)
NO_x	10 - 100						
NO		1x	5.2	10	1	5.2	8.8(-5) - 3.2(-2)
NO_2		2x	3.45	10	2	3.45	8.8(-5) - 7.2(-1)
N_2O		2	2.9	50	2	2.9	3.5(-2) - 3.6(0)
SO_2	0.5	0.5x	7.3	0.5	0.5x	7.3	5.3(-5) - 7.2(-3)

*Reference 5.
+2.5(1) = 2.5×10^1
xWith Accurate Temperature Profile

observing radiation below about 3.5 μ due to atmospheric emission and other effects at greater wavelengths. Thus the optimum region for working is between 2 and 3.5 μ, although for some gases it is necessary to work at higher wavelengths.

There are several requirements for remote trace gas measurement techniques. These include specificity for gases of interest, sensitivity and range of measurement speed of measurement, simplicity of operation, ability to make measurements of several gases, and instrument size, weight, and power. A number of optical techniques were compared in a previous study (Ref. 6). While this was specifically intended for the application to CO measurements the conclusions are qualitatively applicable to the measurement of many other gases. The following signal to noise ratios were calculated for instruments operating at 2.3 μ.

Hadamard Spectrometer	1.7
Derivative Spectrometer	0.2
Correlation Spectrometer	1.7
Gas-Filter	20.
Fluorescent Chopper	2.8
Interferometer-Spectrometer	2.4
Correlation Interferometer	37.

The signal to noise ratios indicate the capability of the technique to use weak lines in measurements. This capability is desirable so that the gas burden has a nearly linear effect on the signal and that a wide range of densities can be covered. These results indicate that a number of techniques lack this capability. In addition to this difficulty most techniques have other problems. For example, a high-resolution interferometer-spectrometer has a long scan time resulting in poor temporal and spatial resolution. In addition it must be quite large and have a very high data rate. The gas-filter instrument is dependent on the absence of overlapping lines and cannot make a meaningful and accurate limb measurement because of Doppler shift. The fluorescent chopper also has this latter problem.

Considering all aspects and requirements of the measurements, the correlation interferometer offers the best practical method for obtaining data (to ground level) on a number of pollutants.

THE CORRELATION INTERFEROMETER TECHNIQUE

Interferometry

The use of spectral techniques for the remote measurement of concentrations of trace atmospheric species is dependent on separating the effects of the species being measured from those of all other species present in the optical path. In techniques where a part of a spectrum is measured, the separation must be obtained by spectral resolution. Thus, some separable part of the spectrum must show an appreciable effect of the species being measured and any significant effects of other species must be such that they can be eliminated. If a different technique is used, effects must obviously still be separable but the separation criteria is no longer spectral resolution but a type of resolution peculiar to that technique. Such a technique is interferometry. In this technique the separation is accomplished by a resolution of path differences. While there is a relationship between spectral resolution and the resolution of path differences, it is not always a simple relationship such as the reciprocal of the path difference scanned.

The instrument developed for this program is a correlation interferometer. The following discussion will describe the basic theory of its operation in some detail. A more detailed description of the theory of the technique and the feasibility of its use for the measurements of methane and carbon monoxide has been discussed elsewhere (Ref. 7).

An interferometer is shown in Figure C-1. The essential elements are a beam splitter and two mirrors, plus a detector to measure the radiation output. Light from the source is incident on the beam splitter, B. At the beam splitter it is divided into two paths; one portion of the light goes to one mirror, M_1; the other portion of the light goes to the other mirros, M_2. The two portions recombine at the beam splitter and the intensity of the recombined light is registered by the detector, D. The intensity of the radiation received by the detector will depend on the difference between the lengths of the paths traveled by the beams in the two arms. The length of the path F-B-M_1-B-D can be made different from that of the path F-B-M_2-B-D. If the two optical paths are exactly the same, the path difference

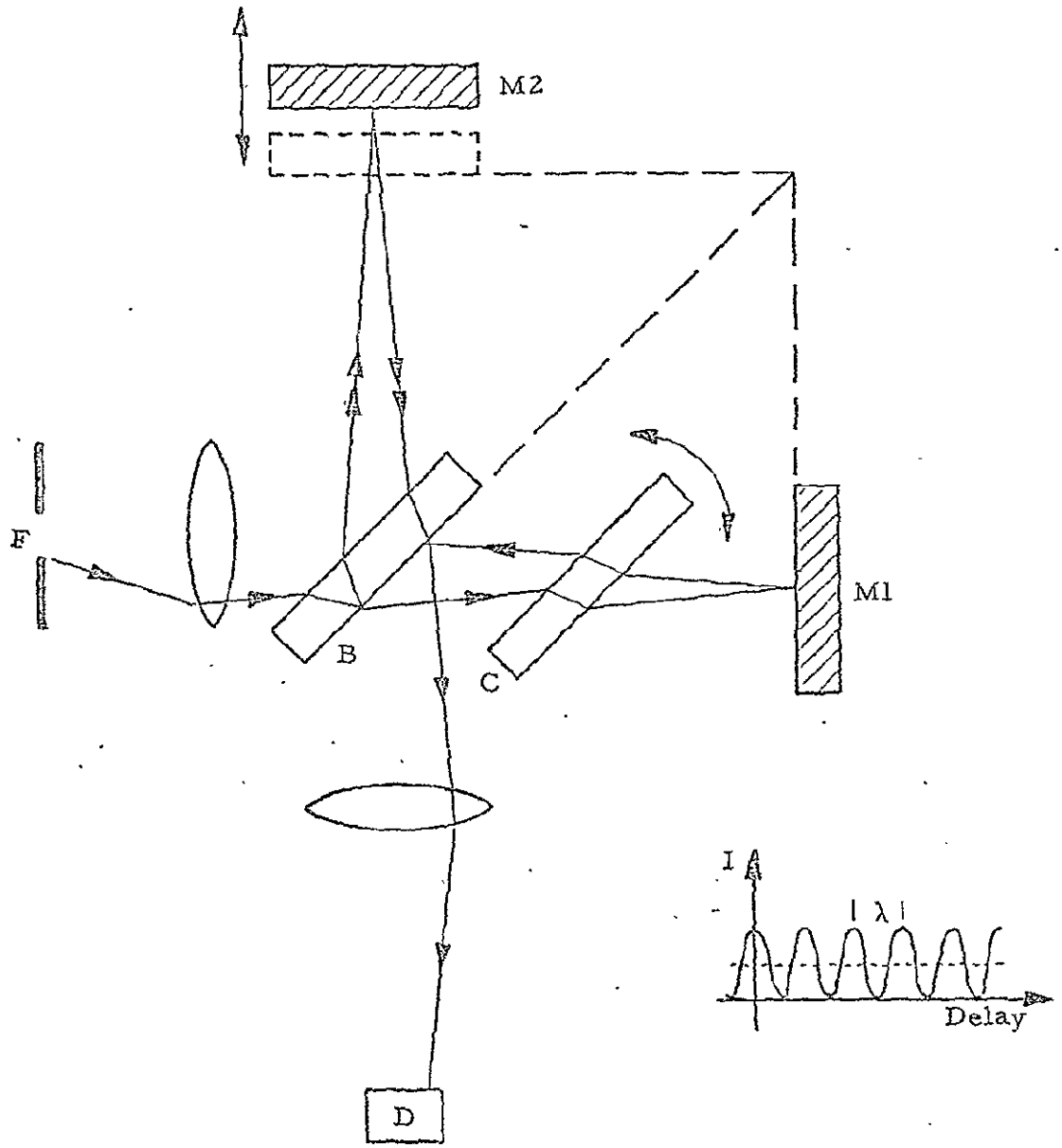

Figure C-1 Interferometer and Interferometer Output

(delay*) is zero, and there is a peak in intensity. For monochromatic radiation entering the instrument, if the path difference is increased by one-half the wavelength, the intensity reaching the detector goes down essentially to zero. If the path difference is increased again to one wavelength, another peak occurs. This sinusoidal oscillation about a mean level repeats at intervals of one wavelength as the path difference is scanned. For polychromatic radiation, the effect is the sum of many such sinusoids, one for each wavelength. The instrument actually does a Fourier transformation of the spectrum of the radiation entering. In most interferometers, the path difference is changed by shifting one of the mirrors, a process which causes some unnecessary alignment problems. One of the features of the correlation interferometer is that the problem of having to scan and maintain the position of the mirror accurately is avoided by having fixed mirrors and tilting a plate of refractive material in one arm of the interferometer. Many interferometers have such a refractive plate, but generally it is left in a constant position. Rotating the plate varies its optical thickness and has the same effect as moving one of the mirrors back and forth without the alignment problems.

Spectra, Interferograms and "Resolution"

The relationship between the spectrum of the radiation and the interferogram of the radiation is given by the cosine Fourier transformation. The interferogram signal, I, as a function of path difference, X, which results from the spectral input, S, (a function of frequency, ν) is given by:

$$I(X) = 2 \int_0^\infty \Pi (S_i (\nu)) \cos (2\pi \nu X) \, d\nu.$$

If essentially all the information on any given species (the major effect of that species on the interferogram) occurs over a small part of the interferogram, only that range of path difference need be scanned. The operation of the correlation interferometer involves the treatment of that part of the interferogram data to obtain species densities directly without the need to produce a spectrum by Fourier transformation. With such an operation, the concept of spectral resolution loses meaning.

*The term "delay" refers to the difference in phase for radiation traversing the two arms. This is related to the path difference by the velocity of light and the frequency of the radiation.

When the effects of the gases of interest are confined to a narrow spectral region and the incoming radiation can be band-limited by filters, the sampling theorem gives another useful relation between spectrum and interferogram, namely that the interferogram need only be measured at points whose spacing is the reciprocal of the spectral band width. That is, the useful information is contained in the modulation envelope of the interferogram and that the rapidly fluctuating carrier-wave form is redundant. In the correlation interferometer, the carrier is removed by heterodyning the signal, using a local oscillator. Eliminating the carrier and working with the envelope greatly reduces the sampling accuracy required. By heterodyning the interferogram with a cosine or a sinusoidal variation, the interferogram is reduced to its essential variations.

The Measurement in the Presence of Interferents - Correlation

The optimum measurement that can be made is given by combing all intensities of the various points of the part of the heterodyned interferogram of interest in a manner related directly to the intensity of the signal shape. That is, a weighting function or correlation function is generated and the measurement is the integral of this correlation function times the signal over the delay range which is scanned. This integral is directly proportional to the optical thickness of the gas being measured. When there are no interferents, the signal-to-noise ratio in such a measurement can be shown to be optimum when the correlation function looks exactly in shape like the interferogram of the desired gas. Now consider that other gas species may affect the signal received. The correlation function is again used but is no longer matched exactly to the desired gas signal shape. It is adjusted so that, when it is cross-correlated with the interferents and the result is integrated over the range scanned, all the positive correlation regions are balanced exactly by the negative correlation regions of the interferent effects, so that the total area under the curve; i.e., the contribution of the effect of interferents to the result of the measurement, comes out to zero. This is done subject to the constraint that there is still as large a positive correlation between the correlation function and the desired gas as possible. The result of the measurement is still proportional to the desired gas burden. In principle, if there are a number of interferents of this sort, rejection of these interferents can still be achieved so long as we have at least as many independent points to describe our

correlation function as we have gases which are affecting the radiation. Any of the gases which affect the interferogram may be taken as the desired gas and an appropriate correlation function generated. Then, the data can be used to give a separate measurement of each gas, and, if necessary, this may be done in parallel and in real time.

The correlation function to be used for the measurement of a specific gas is found by determining several interferograms for various combinations of amounts of the gases which are interferents, all with the same amounts ("the nominal amount") of the gas being measured, and one interferogram with a different amount of the ("the target amount") gas being measured with one of the same interferent combinations. These interferograms are the calibration data.

In choosing the conditions for the calibration interferograms it is necessary to include all the gases which affect an interferogram which would be produced by the correlation interferometer over the delay range and with the optical range of densities of these gases to be encountered in the measurements. It is better to make measurements by interpolating between calibration points than to extrapolate beyond a calibration point. It should be noted that it is not necessary to know the identity and the amounts of interferent gases but only to be sure that they are present over the required range. Of course, in calibrating, the identity and amounts of the gas to be measured must be known.

In order to calibrate for atmospheric gases the atmosphere itself provides a suitable calibration situation. Thus it is possible to obtain conditions with a sufficient amount of water as well as any unknown interferents.

Advantages of Correlation Interferometry

One of the most significant advantages of the correlation interferometer is its ability to measure species densities with high sensitivity and specificity using very weak absorption bands, such as the overtone and combination bands in the reflected-solar region. (The very difficult CO measurements, in the presence of substantial atmospheric interference, at 2.3μ is an example.) For this reason, the correlation interferometer is the only technique known to have the capability of monitoring the concentration, the distribution, and the effects of many species in the atmosphere near the earth's surface even in the presence of atmospheric temperature inversion.

In addition, the correlation interferometer has a number of advantages over other dispersive and non-dispersive techniques. These, of course, include the Jacquinot (throughput) advantage and the Fellgate (multiplex) advantage, common to all interferometric techniques. (See Ref. 9 for a discussion.) Other advantages include:

Short time scan: A measurement time of a second is very short compared with the time of scanning of an interferometer such as a Michelson interferometer which may be of the order of minutes since the scan may cover up to 10 cm rather than about a millimeter as in the correlation interferometer.

Convenient output: The output of the correlation interferometer may be either one number for each species for each measurement period or, at most, 64 points per interferogram which easily can be processed real time, thus eliminating data storage and extensive data processing problems.

Compact and flexible instrumentation: The correlation interferometer with associated electronis is small and, although complex in understanding, is simple in operation, with a minimum of moving parts. Changes in species to be covered are readily implemented.

Mapping and limb modes: The correlation interferometer is able to make measurements both downward looking (and hence determine effects through the temperature inversion and to the ground) and limb-looking (to obtain stratospheric vertical profile data).

If a comparison of the correlation interferometer is made with dispersive IR techniques, it should be noted that the major problem is that of light throughput of the latter instruments; and, because for many lines there is serious overlapping - indeed for lines of many bands which may be useful, practically all lines are seriously overlapped - the resolution required can be prohibitively high.

If a comparison is made with other techniques which accept more light than the dispersive techniques, it can be said that effects of interference are generally much better minimized in the correlation interferometer technique. Other techniques - even those with so-called "infinite resolution", such as those employing a gas-filled

cell as a filter - are bothered by any overlapping lines transmitted to the instrument since the overlapping parts of any lines of an interferent gas act to the instrument as the gas itself. Although such overlapping affects the interferogram obtained by the correlation interferometer, the instrument is capable of overcoming such effects in most cases.

THE SATELLITE AS A PLATFORM

Mapping Mode

The correlation interferometer is designed to determine the absorption of the gas of interest, in a column between the source and the instrument. The measurements are to be made in two modes - mapping and limb. In the mapping mode, the instrument's field of view is in the nadir direction from the platform to the earth's surface measuring the radiation reaching the instrument, and hence the absorption, as a function of time. The radiation measured is a combination of that from three sources - solar radiation reflected from the earth's surface, earth radiation, and radiation from atmospheric gases. The relative amounts of radiation from the three sources depends on the wavelength and on ground and atmospheric temperatures. At wavelengths less than about 3.5μ, the reflected solar radiation predominates while above about 3.5μ, earth radiation dominates over reflected solar radiation. When earth radiation dominates over reflected solar radiation, atmospheric emissivity may be great enough to dominate over the earth radiation. This is true in the case where there is a temperature inversion layer. Such radiation is also important where the atmospheric temperatures are nearly as great as that of the ground. This results in a lessening of the effect of low-altitude gases on the absorption and a reduction of the sensitivity of any optical absorption measurements to low-altitude gases. Thus, it is better to work at wavelengths below 3.5μ. Here a molecule near the ground has as much effect as one in the upper atmosphere. In the event higher wavelengths are used, as they must be for some gases, it is necessary to use an accurate atmospheric temperature profile and to assume a relative vertical distribution of the gas being measured. With such information, absorption data can then be analyzed to produce density data. However, for use of radiation of wavelengths less than about 3.2 to 3.5μ, the density figures can be immediately obtained from the instrument data. It should be noted that the correlation interferometry technique for this application works well

with comparatively weak bands which tend to be overtones or combinations and to occur at comparatively lower wavelengths than do most optical techniques. Thus, this technique tends to avoid complications of other techniques and to be able to obtain important data on pollutant concentrations and distributions near the earth's surface.

The most desirable spatial coverage and spatial resolution is determined by a balance between the instrument parameters and data requirements. The data needs depend on the extent of sources, the lifetime of the gases, the densities of the gases, and the relative amounts of the gases in clean and polluted regions. Since the data required for the solution of different problems require different spatial coverages, the experiment is designed to produce data with a variety of spatial resolutions dependent on the platform and its altitude and on the fore-optics employed.

The spatial resolution of the instrument is determined by the field of view. For the correlation interferometer, the maximum symmetrical field of view is 7° in diameter - this limit being determined by the difference in phase of the light as a function of the off-axis angle. From an altitude of 600 nautical miles this would give a ground resolution of 73 miles. This, of course, can be varied by choice of fore-optics.

A 2° field of view would give a spatial resolution of 21 nautical miles (39 km). The field of view can readily be made larger than this to suit the desired measurement requirements. A 2° field of view would give global coverage in two months at the equator, while 6° would accomplish this in twenty days. Regions away from the equator would be covered more rapidly.

The scan time of the correlation interferometer is about one second in the present operating model. The orbital motion of satellites correspond to ground speeds of the order of 4 miles/second. Thus a 21 x 21 mile field of view (2°) is displaced in the direction of vehicle flight by 4 miles, so that it takes about five seconds to completely change the field of view.

A field of view 21 x 21 miles or larger square area is suitable for a satellite flight. The spatial resolution and spatial coverage so obtained would be reasonable for the test of the instrument and for the obtention of significant pollutant density data.

If faster data acquisition is desired for more rapid global coverage, the field of view can easily be changed by degrading the resolution. This need not be a symmetrical change. In order to increase coverage while preserving the temporally-determined resolution in the direction of the vehicle motion, the field of view could be changed to a rectangle with the long dimension transverse to the ground track (e.g., $2^{\circ} \times 6^{\circ}$) either by using anamorphic fore-optics or by altering the shape of the interferometer field stop, or both.

The correlation interferometer accounts for changes in albedo within the field of view during a scan by means of a fast AGC channel. This continuously monitors the average light level within the field and accordingly normalizes the main channel output. Differences in albedo within the instrument field of view are compensated for by means of a field lens in the fore-optics. This lens disperses the contribution of each element in the field of view uniformly over the field stop of the instrument.

Limb Mode

Operation of the instrument in the limb mode involves looking from orbit through the earth's limb at the sun. The path passes through the earth's limb at tangential altitudes from ground level up through the earth's atmosphere. The lower limit is determined by aerosols and water vapor content. The upper limit is dependent on the total density of the absorbing gas in the path. By obtaining column densities with a variety of tangential altitudes and by inversion of the data, a vertical profile of density will be obtained. The resolution attainable in the verticle profile is, for a platform altitude of 600 nautical miles (1100 km), of the order of 7 km.

Orbit Considerations

Since it is desirable to cover the entire globe in the mapping mode, the primary objective, a polar orbit is desirable. This limits the limb measurements to the polar regions. The variation with latitude of stratospheric pollutant concentrations is slight for some pollutants while more significant for others. This, in general, is probably not a serious variation. It is considered more important to obtain nearly global coverage in the mapping measurements than to extend the limb measurements over a larger latitude range.

Satellite orbits such as that of the Nimbus satellites are highly inclined in order to permit maximum observation during daylight. The sun nominally lies in the orbital plane at all times. This requires that the satellite orbit be within 10 degrees of the polar axis. Due to the nearly polar nature of the orbit and the limited variation in angle between the plane of the ecliptic and the earth's axis, the limb transmission experiment can be performed only at latitudes between the poles and the Arctic and Antarctic circles, the axact location depending on time of year.

Associated Data Requirements

In addition to the data acquired by the correlation interferometer, certain other data are required for reduction of CIMATS data. Such data should be available on a satellite. These include latitude and longitude, altitude, sun angle, time, and atmospheric temperature. The latitude and longitude is that of the point on the ground directly under (nadir to) the spacecraft. The sun angle is needed for the limb measurements. From the location and the time, the angle of solar reflection on the ground can be determined and the path length and geometry can be calculated.

In order to treat data for those measurements which are in the thermal IR, accurate temperature profile data are required to determine the effect of atmospheric emission on the signal. No definite statement can be made on the accuracy of the temperature measurements since the effect of inaccuracies on the calculated burden depends on the temperature profile and in the case of a temperature inversion, even complete accuracy of the temperature profile cannot yield data on the constituent density below the top of the inverson layer. For a "standard" temperature profile with no inversion layer, accuracies of better than 2° are required and in some cases, accuracies of 1° are needed.

In addition to the five types of data noted above, data on the amount of atmosphere in the path and on cloud cover are required for any interpretation of data. The CIMATS package includes another optical sensor. This is a radiometer with a filter such that the major absorbion is that of the $\nu_1 - 2\nu_2$, and $4\nu_2 - \nu_3$ bands of CO_2. The intent of this measurement is to determine the amount of absorption so as to give the amount of CO_2 in the path. Since for most regions the normal CO_2 background mixing ratio can be assumed, the amount of atmosphere through which

the radiation has passed can be determined. This amount of atmosphere is dependent on atmosphere pressure variations, and the altitude of reflections which is in turn dependent on the altitude (above sea level) of the ground and on the cloud cover.

Data Reduction and Analysis

The major data which are telemetered from the vehicle will be a 64 point heterodyned interferogram. However, the data useful to any user are the densities of the pollutant. Thus the telemetered data must be treated to obtain these densities. The heterodyned interferograms must be multiplied by a correlation function as described above. The correlation or weighting functions will have been previously obtained in ground-based calibration. Thus the instrument with the associated ground-based data (real time) reduction will provide densities of each of the pollutants under examination. In addition to the interferogram data the associated data will permit interpretation of the species densities.

The mapping mode provides a column density of the gas of interest. In the non-thermal infrared where a molecule near the ground has the same effect as a molecule in the stratosphere, any relative distribution can be assumed and the concentration profile determined. If a constant mixing ratio is assumed the concentration at ground level is given by:

$$C_o = \frac{\text{Column density}}{2 \times \text{Scale height}}$$

In the thermal infrared where the temperature profile drastically affects the net absorption, a molecule near the surface has much less effect on the signal than does one at high altitudes. A strong effort is made, therefore, to work absorption bands out of this region. The interpretation is much more difficult in such cases and the accuracy, especially that of low altitude effects, is much worse. The analysis of data in the thermal infrared with this technique, just as with other techniques working in this region, involves fitting the data to an assumed relative mixing-ratio profile and a temperature profile both of which must be accurate. An iterative procedure is required to obtain agreement between the signal received and the profiles. In most cases a variety of gas-concentration profiles would fit the same measurement data.

For the limb mode, a more complex model is needed (Ref. 10). The atmosphere is divided into a number of layers, within each of which the composition

is assume to be uniform. At a given altitude, an inner shell or shells with an altitude thickness of a scale height contributes about 70% of the optical thickness, so that unfolding of the data to obtain an altitude concentration profile is not a serious problem.

Corroborative Measurements

Although data from CIMATS, along with supporting and housekeeping data as described above, are essentially sufficient to meet the objectives of the flight mission, it is highly desirable to conduct corroborative measurements, especially at an early stage of the flight mission, to validate the quality of the CIMATS data.

Corroborative measurements can readily be obtained from the ground by spectrometric measurement viewing the sun through a column of atmosphere. An ideal method to accomplish this is to utilize a Fourier-transform spectrometer system currently being modified at NASA-Langley specifically for such measurements.

By properly locating the instrument in a relatively uniform, unpolluted area, such that the atmosphere viewed by the ground spectral measurement is representative of the atmosphere seen by the larger field of view of the CIMATS-satellite instrument, valid comparisons can be made. The ground location can, of course, be changed, as desired.

In addition, specific areas of interest can be monitored, as necessary by airborne sampling and remote sensing devices, as well as by ground-based spectral measurements.

Physical Parameters

The satellite instrument will weigh approximately 50 lbs. and will consist of the opto-mechanical and electronic subsystems. The opto-mechanical subsystem will weigh approximately 40 lbs., occupy a volume of approximately 2 ft^3, and will be made up of the Corning ULE frame and components, the thermoelectric cooled detector, the calibration cell, the telescope, and the retaining structure. The electronic subsystem will be packaged in a module of 6 x 6 x 6.5 inch dimensions. Power requirements will be approximately 15-20 watts for the electronics plus approximately 15 watts for the detector thermoelectric cooler.

PHENOMENA TO BE OBSERVED

The measurements to be made with the CIMATS instrument are the column densities of a number of the pollutants listed in Table C-1. Until a specific flight at a known date is selected, it is premature to select the species to be observed. If such an opportunity were available at this time, the list would include those given in Table C-2.

TABLE C-2

OPERATING CONDITIONS FOR THE CIMATS SENSOR

GAS	DELAY RANGE (mm)	FILTER (μ)
CH_4	2.7 - 4.0	2.3
CO	2.7 - 4.0	2.3
CO_2	2.7 - 4.0	2.0
H_2O	2.7 - 4.0	2.0
NO	2.6 - 4.0	5.28
NO_2	8.3 - 10.9	3.45
N_2O	2.7 - 4.0	2.9
NH_3	2.7 - 4.0	2.0
SO_2	7.0 - 9.5	7.3

The column densities of these gases would be measured in both the mapping and limb modes. As mentioned above, it is highly desirable to use bands appreciably below 3.5μ since this avoids the drastic errors introduced by atmospheric emission and has no large errors due to atmospheric phenomena, the most serious suggested, scattering by aerosols, being, in the opinion of most experts no more than a few percent at wavelengths of 2μ or higher unless the atmosphere is quite hazy. Thus all the gases listed except NO and SO_2, and to a lesser extent NO_2, would be out of the thermal infrared. In the mapping mode, for most of the gases an accuracy of less than 10% error would be expected, with CO_2, H_2O, and N_2O having errors probably below 5%. For limb measurements, a 10% or better accuracy can be expected except for NO which would be expected to have an error of the order of 20 - 30%.

The column density data are obtained by direct treatment of the 64 points of the interferogram as described above.

REFERENCES

1. Robinson, E., and Robbins, R.C.: "Sources, Abundance, and Fate of Gaseous Atmospheric Pollutants," Stanford Research Institute, Final Report on Project PR-6755, Feb. 1967 and Supplemental Report, April 1971.

2. McCormac, B.M., ed.: "Introduction to the Scientific Study of Atmospheric Pollution," D. Riedel Publ. Co., Dordrecht-Holland, 1971.

3. Singer, S.F., ed.: "Global Effects of Environmental Pollution," Springer-Verlag, New York, N.Y., 1970.

4. Stern, A.C.: "Air Pollution," Academic Press, New York, N.Y., 1968.

5. NASA Langley Research Center: "Remote Measurements of Pollution," NASA SP-285, Aug. 1971.

6. Bortner, M.H., and Kummler, R.H.: "Potential Techniques for the Remote Sensing of CO," Report on AAFE Contract NAS1-10139, Feb. 1971.

7. Bortner, M.H., Alyea, F.N., Grenda, R.N., Levy, G.M., and Liebling, G.R.: "Analysis of the Feasibility of an Experiment to Measure Carbon Monoxide in the Atmosphere," General Electric Co. Report on Contract NAS1-10139, March 1973.

8. Plyler, E.K., Benedict, W.S., and Silverman, S.: J. Chem. Phys. 20, 175 (1952).

9. Bell, R.J.: "Introductory Fourier Transform Spectroscopy," Academic Press, New York, N.Y., 1972.

10. Venkateswaren, S.V., Moore, J.G., and Kruger, A.J.: J. Geophys. Res. 66, 1751 (1961).

APPENDIX D

MICROWAVE RADIOMETER AND SCATTEROMETER

A. Background

The Radiometer/Scatterometer (RADSCAT) experiment was the first integrated active and passive, microwave remote sensor to be flown in space. Its objectives were to assess the ability of microwave sensors to measure earth physical sciences phenomena in order to provide future remote sensors with optimum performance tailored to a specific application. More specifically, the radiometer/scatterometer (RADSCAT) portion of the experiment was designed to acquire data and assess the feasibility of microwave techniques for sensing wind velocity and direction, sea surface roughness and wave patterns and several other related phenomena.

For purposes of this discussion the succeeding sections will be limited to the radiometer/scatterometer portions.

The radiometer operation is based on the principle of thermal emissions from an object in the microwave region. The thermal energy emitted by any object above absolute zero ($0^{o}K$) may be modeled with the aid of the concept of emissivity; that is, if the object were a perfect "black body" its "brightness temperature" T_B would be $T_B = \epsilon To$ where T_B = brightness temp.
ϵ = surface emissivity
To = physical temp.

In the case of the ocean's surface, the emissivity is a complex function of

frequency, polarization, angle of incidence, complex dielectric constant, physical temperature and roughness. The first three parameters are fixed by the system in use while the next two do not, in general, vary greatly over small distances or in short time intervals. Thus the brightness temperature responds mostly to changes in roughness which in turn is directly affected by the wind. The radiometer is an extremely sensitive, stable receiver which measures total noise power within a finite brandwidth B according to

$$P = kT_A B$$

where T_A is the "apparent antenna temperature" and is related to T_B, the microwave brightness temperature by

$$T_A = \int_{\Omega} T_B\ (\theta,\ \phi)\ G_o\ (\theta,\phi)\ d\Omega \qquad G_o(\theta,\phi) = \text{ant gain function}$$

Thus, every time the radiometer makes a measurement, it outputs a voltage proportional to T_A, which in turn can be related to T_B.

Included with the antenna temperature measurements are periodic calibrate and baseline data points which serve to establish system gain factor and linearity.

The scatterometer is a radar which measures the amount of energy backscattered from a target instead of range to the target. The measurement is accomplished by transmitting fairly long (narrow band) microwave pulses and estimating the return signal power (the term estimate is used here since the process is essentially of Gaussian statistics in presence of Gaussian additive noise) through filtering and detection. Since different incidence angles produce different Doppler frequency shifts on the return pulse and since the geometry and configuration prohibit extremely high transmitter powers, it is also

necessary to employ several filters and integrate several return pulses in order to make an accurate measurement of P_R, the return signal power. Through the process of periodic internal calibration sequences the instrument also measures its own transmit power, P_T. If the ratio of P_R/P_T can thus be formed it is possible to measure σ^o - the normalized radar backscattering cross section. As in the case of radiometry's ϵ, σ^o is also a function of frequency, angle of incidence and polarization as well as surface roughness. The relationship between σ^o and P_R/P_T is derived from the familiar radar equation

$$\sigma^o = \frac{(4\pi)^3 R^4}{\lambda^2} \cdot \frac{P_R L^2}{P_T} \cdot \frac{1}{\int_A G_o^2(\Psi) f(\Psi) dA}$$

where R = slant range to the target

λ = wavelength of microwave energy used

L = one way atmospheric loss term

$G_o(\Psi)$ = antenna gain function

$f(\Psi)$ = two way antenna pattern function

A = area illuminated

In this case, σ^o also responds to changes in surface winds as per the following description. As the wind velocity increases above (approx) 2m/sec, capillary waves are generated whose wavelength is on the order of a few centimeters. These capillary waves increase in amplitude as the wind speed increases, giving rise to a "rougher" ocean surface which in turn makes σ^o appear larger. The magnitude of this phenomenon is maximized when viewed with energy of the same wavelength as the capillary waves, that is X to Ku band. At incidence angles between 25° and 55° it has been found that σ^o

and integration commands and the data A/D conversion and formatting into the PCM data stream for recording on the EREP tape recorder. There were four basic scan modes which had several allowable sub modes depending on polarization, initial scan angle or radscat sequence desired. The system was more complex than would normally be required for an operational sensor because of its experimental nature.

C. Data Output and Format

The Radiometer/Scatterometer data was formatted into a 5.33 Kbps, bi phase coded (MSB first) PCM data stream and recorded (after multiplexing with several other EREP experiments data and the master time code) redundantly on 2 of the 28 tracks of the EREP tape recorder at 7.5 IPS. When the 13 band multispectral scanner was operated the tape speed automatically changed to 60 IPS producing a momentary loss of data through distortion. The output data frame consisted of 200 10 bit words arranged in 4 subframes of 50 each. Frame time was 375 m sec, subframe time was 93.75 m sec (375/4) and word time was 1.877 m sec. The data frame was divided into 20 6 word blocks (5 per subframe) which contained the essential science and status data. The remaining words (80 per frame, 20 per subframe) were devoted to synch (3 words per subframe) subframe ID (1 word per subframe) and analog housekeeping telemetry words (4 groups of 4 per subframe). Figure D-1 shows the basic data frame. In any particular radscat operating mode the 20 bit status word in each 6 word measurement group would indicate what type of data was to be found in the two science words - i.e., scat signal plus noise (VS+N) scat noise (V_N), scat cal (V_C), rad ant temp (E_{OA}), rad cal (E_{OC}) or rad baseline (E_{OB}). If the measurements had not been A/D converted by the time the associated roll gimbal angle was read into the group, then bit 17 of the

increases generally according to a power law relation such as

$$\sigma^{o} = Ku^{N} \qquad \text{where} \qquad \begin{array}{l} K = \text{constant} \\ u = \text{wind speed} \\ N = \text{exponented } 1 - 1.5 \end{array}$$

as the wind speed increases. It has also been noticed that there is a definite direction dependence at work here also - that is, the magnitude of σ^{o} varies as the relative angle between the wind direction and sensor viewing azimuth is varied.

The Radiometer/Scatterometer was designed such that nearly simultaneous rad and scat data were obtained from the same point on the earth. In this fashion it was felt that a more complete description of the physical phenomena could be made and the complementary nature of the two techniques evaluated.

B. Sensor Operation

The Radiometer/Scatterometer was located outside of the habitable portion of Skylab and required three electrical interfaces - power, command and data. The instrument was operated by an astronaut crew member through switches located on the Command and Display (C&D) panel. Several operating modes were available for data collection depending on the position of the desired target and whether altimetry or radscat data was required. The crew member would select the desired operating configuration, having control over scan mode, polarization, offset angle and either altimeter or radscat operation and then turn the instrument on. All operation from this point was automatically controlled within the experiment by digital logic which generated the necessary scan drive signals for the two axis controlled parabolic antenna, the mode sequencing and timing signals, the transmitter pulses and PRF, the radiometer circulator switching sequences, the scatterometer gain selection, filtering

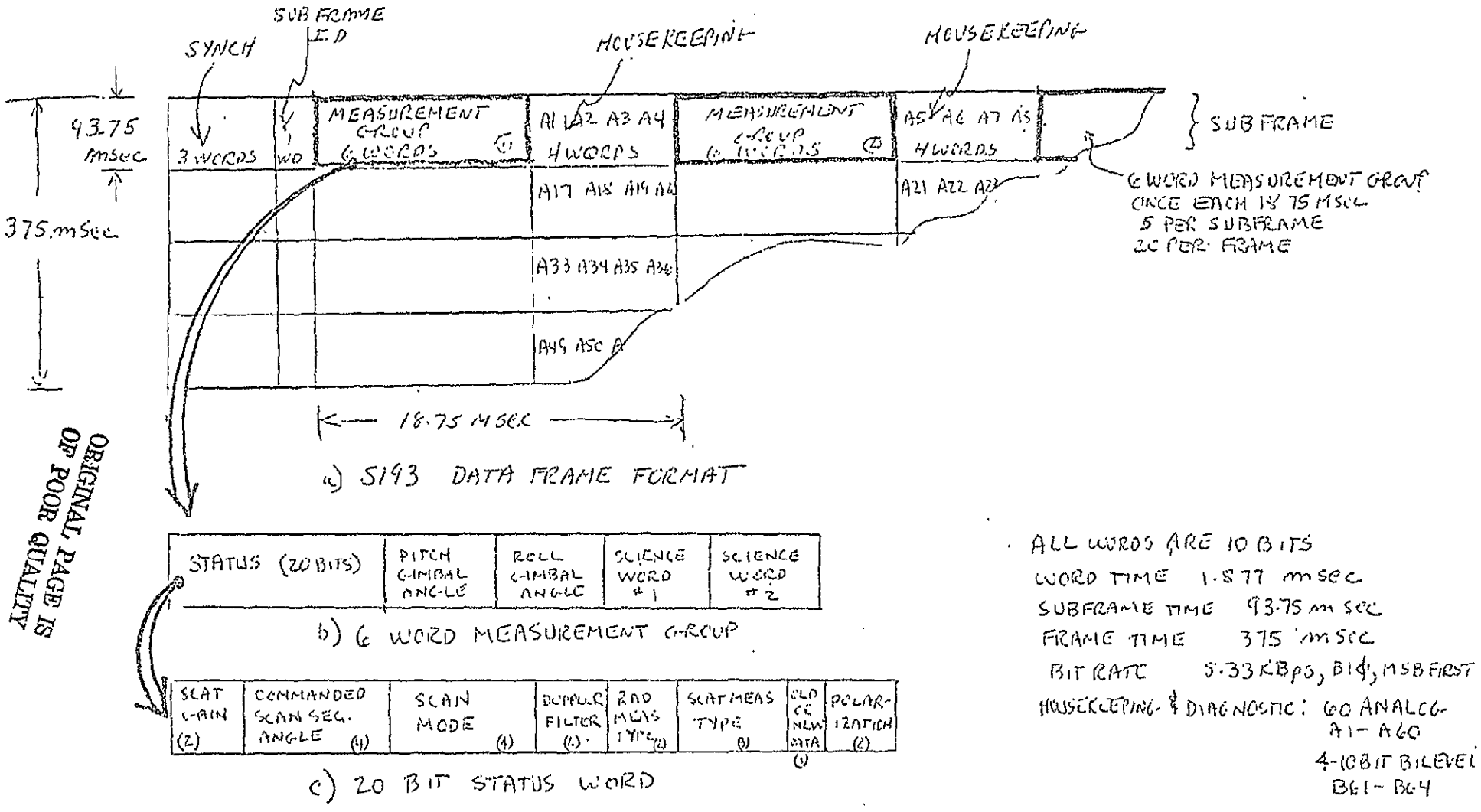

ALL WORDS ARE 10 BITS
WORD TIME 1.877 msec
SUBFRAME TIME 93.75 msec
FRAME TIME 375 msec
BIT RATE 5.33 KBps, BIϕ, MSB FIRST
HOUSEKEEPING & DIAGNOSTIC: 60 ANALOG A1 – A60
4-10 BIT BILEVEL B61 – B64

FIGURE D-1 S193 RADSCAT DATA FRAME

ORIGINAL PAGE IS OF POOR QUALITY

status word would be set to a $\emptyset$ indicating old data to be ignored. Also included in the 20 bits were indicators of which gain channel, Doppler filter channel and polarization the measurement had occurred at. In this fashion an individual measurement group contained all required associated information for processing plus had the attendant pitch and roll gimbal angles also. This was extremely important since different scat readings (at different gains or angles) were done with various integration times which had to be accounted for in the processing. The four possible radiometer integration times were identified through a combination of knowing the scan mode being operated and the commanded angle in the mode sequence.

D. Processing Requirements

The basic algorithms required to convert the instrument science data into values of T_A or σ^o are not extremely complex and are both linear (or first order) functions. Through analysis and simplified models of the radiometer and scatterometer two algorithms were derived which required not only instantaneous science word data as inputs but various supporting information such as physical temperatures (for determination of reference loads in radiometer as well as physical temps of waveguide losses), status words to determine integration times, filter gains and polarizations and, of course, the pitch and roll gimbal angles for IFOV coordinate calculation. Figure D2 is a block diagram of the functional processing requirements.

1. Correction of science word for integrator drifts & offset

$$V_j' = V_j - q\left[\frac{(IT)_j}{(TC)_j}\right] - \left[(IT)_j \times \text{drift}\right]$$

V_j' = corrected reading

V_j = raw reading from data

q = integrator offset factor

$(IT)_j$ = integration time

$(TC)_j$ = time constant

drift = integrator drift factor

2. $\frac{P_R}{P_T}$ calculation

$$\frac{P_R}{P_T} = \frac{K_C}{K_R\, K_T} \left\{ \frac{V'_{S+N} - V'_N \left[\frac{\left(\frac{IT}{TC}\right)_{S+N}}{\left(\frac{IT}{TC}\right)_N} \circ \frac{F_{S+n}}{F_N} \circ \frac{G_{S+n}}{G_N} \right]}{V'_c \left[\frac{\left(\frac{I.T}{T.C}\right)_{S+N}}{\left(\frac{I.T}{T.C}\right)_C} \circ \frac{F_{S+n}}{F_c} \circ \frac{G_{S+n}}{G_c} \right]} \right\}$$

Kc, KR, Kt = waveguide cal losses

S+N = Sig plus noise meas.

N = Noise measure

C = Cal measure

F = Filter factor

G = Gain factor

3. Range, angle of incidence calculation from vector calculations in an earth centered orbit geometry

4. Antenna Illumination Integral

$$\int_A G_o^2 \; (\psi) \; f(\psi) \; dA \cong G_o^2 \; I_\Omega \; H_o^2 \; R^2 \; \sec\alpha$$

α = angle of incidence

R = slant range

H_o = nominal alt - 435 km

$G_o^2 \; I_\Omega$ = ant integral constants supplied from cal tape

5. Radar Backscattering Cross Section ~ σ^o

$$\sigma^o = \frac{(4\pi)^3 R^4}{\lambda^2} \circ L_1 L_2 \circ \frac{P_R}{P_T} \circ \frac{1}{\int_A G_o^2(\psi) + f(\psi)\, d_A}$$

$L_1 L_2$ = loss const
λ = wavelength

The output data required consisted of the following parameters:

TIME
SCAN MODE
CMD ANGLE
PITCH ANGLE
ROLL ANGLE
INCIDENCE ANGLE
σ^o (V or H)
TANT (V or H)
ALTITUDE
RANGE
IFOV LAT
IFOV LON
SUBSAT LAT
SUBSAT LON
SAT PITCH
SAT ROLL
SAT YAW

In addition, conversions of housekeeping telemetry values to engineering units were required. These were accomplished through inputting the cal curves into a cal tape in a multiple order curve fit and then calculating the required engineering unit given the telemetry value as input data. This requirement does not appear in Figure #2.

A similar situation exists for processing of radiometer data to obtain antenna temperatures. Here, however, only four integration times are possible and less Mode/angle/temp dependent correction needed to be done. However, due to the statistical nature of the radiometer measurements it is necessary to obtain statistics (mean, std dev) of the calibrate and baseline values. Figure D-3 shows the required radiometer processing to calculate the antenna temperatures. The algorithms used here are shown below.

$$T'_{ANT} = K_1 \frac{T_1 + T_2}{2} + (K_2 - K_3 - K_4)T_o + K_5 \frac{E_{OB} - E_{OA}}{E_{OC} - E_{OB}} (T_1 - T_2)$$

T_1, T_2 - reference load temps

T_o - physical temp of circulators

K_1, K_2, K_3, K_4, K_5 = loss const

$$T_A = K(QT)T'_{ANT}$$

$K(Q,T)$ - correction for pol leakage and phys temp of antenna

The radiometer processing also makes use of several internal telemetry points as does the scat and therefore requires their processing and output.

ORIGINAL PAGE IS
OF POOR QUALITY

SCATTEROMETER PROCESSING

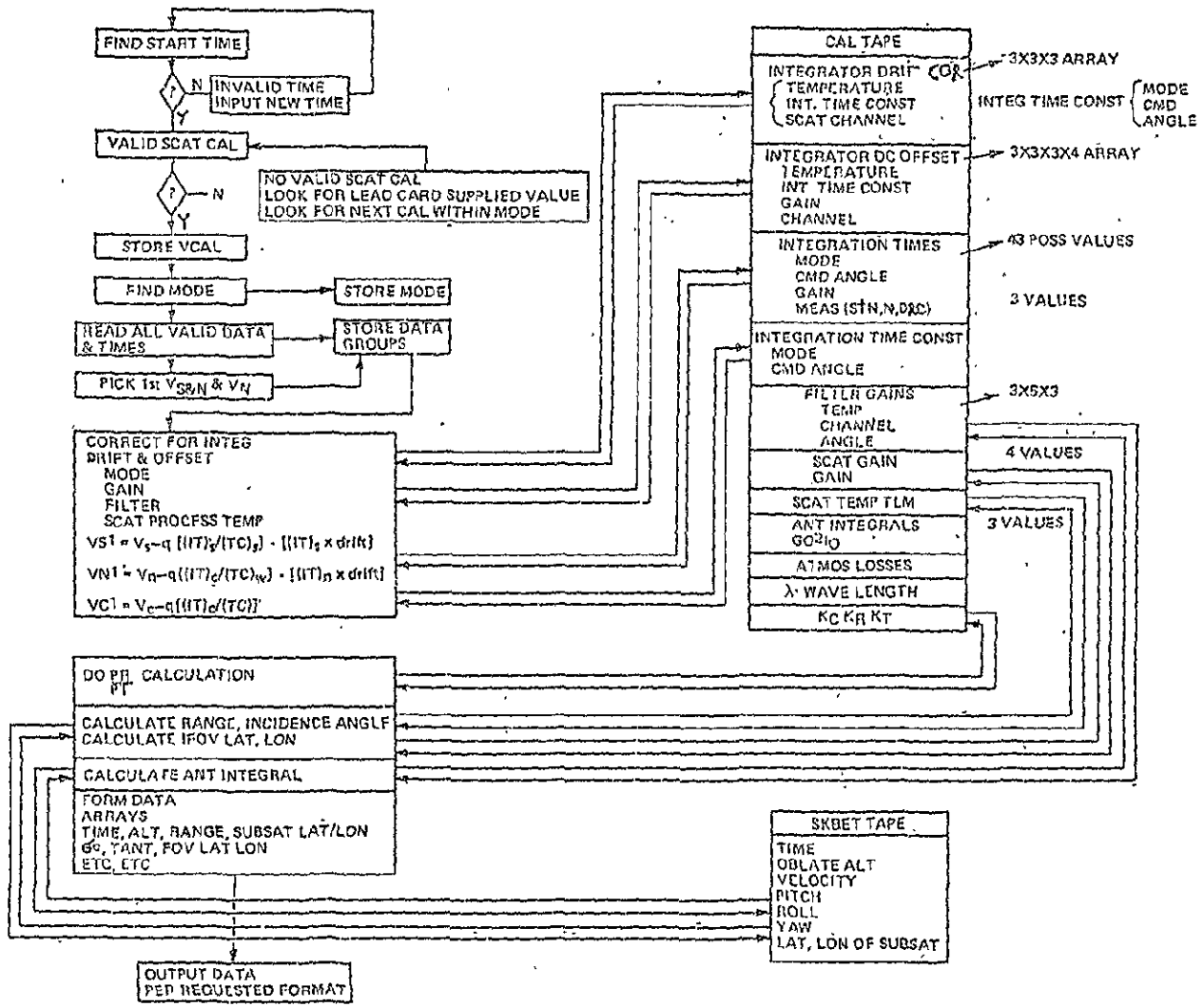

FIGURE D-2

RADIOMETER PROCESSING

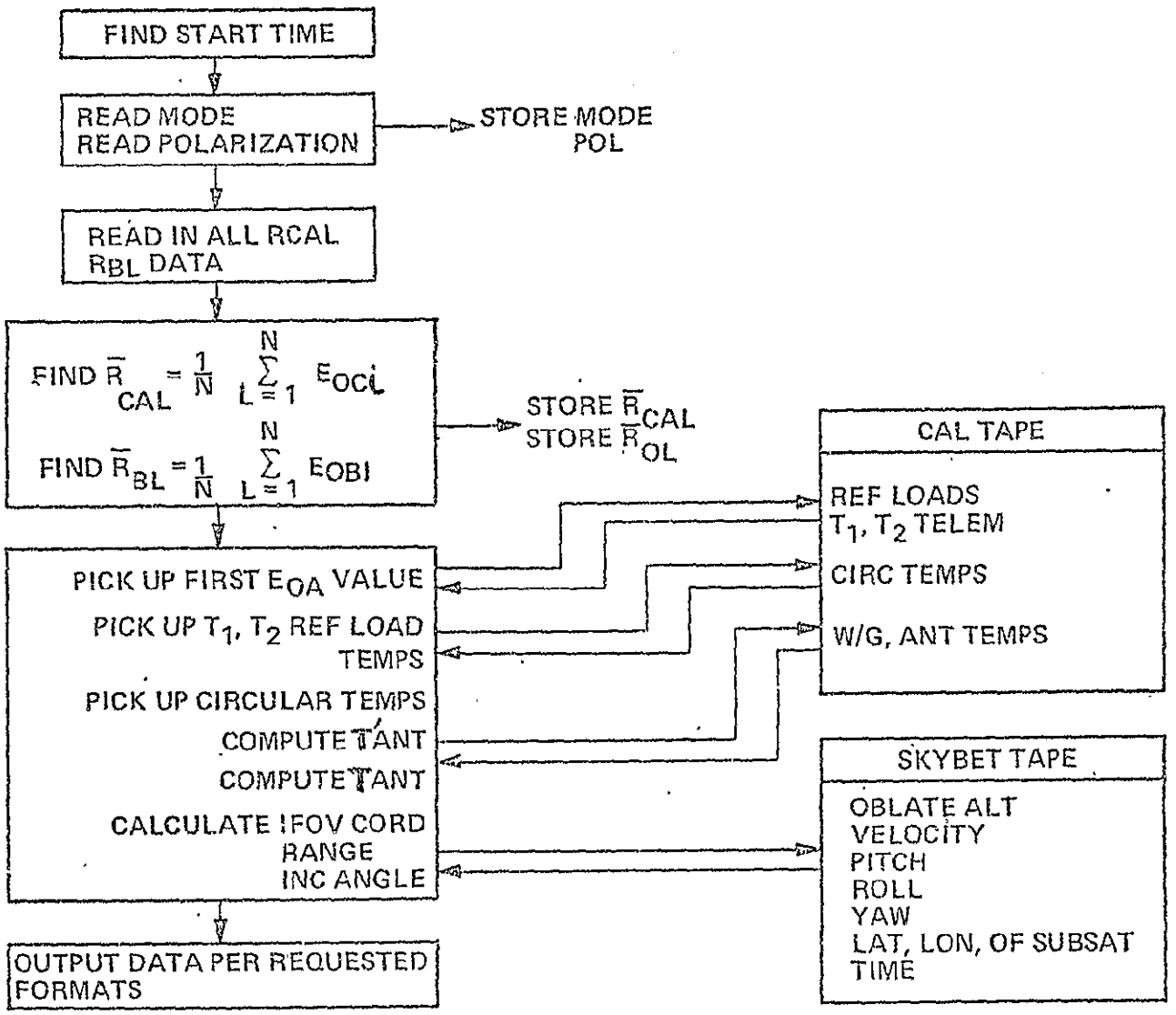

FIGURE D-3

APPENDIX E

ELECTRON ACCELERATOR

The electron accelerator will be used to study the excitation of neutral components of the upper atmosphere and of plasma components in the ionosphere. It will also be used to map magnetic field lines of the earth, to determine the magnitude and direction of the electric field in the ionosphere and to study the excitation of plasma wave in the ionosphere.

GENERAL DESCRIPTION

Configuration. The Electron Accelerator is a modular subsystem of the AMPS Particle Accelerator System. In this system spacecraft 28 VDC power is converted to 500 volts by subsystem A and the 500 volts is utilized to charge a capacitor bank (subsystem B). Power from the bank is further converted to 30 KV (max.) by subsystem C. The output of this supply establishes the accelerating voltage for the electron accelerator. The accelerator is in the form of a filament heated cathode electron source followed by a control grid, an acceleration region, diverging and converging lens electrodes and final accelerating electrode. The beam emerges into a magnetic field region supplied by two sets of coils to provide steering and/or scanning. The accelerator and its power supplies are pallet mounted.

Specifications.

Beam Energy: 1 - 30 KeV

Beam Energy Spread ($\Delta E/E$): ≤ 0.1

Beam Current: 0 - 7 AMPS

Operating Modes

a) DC

b) Pulsed - Rep. rate and pulse duration variable within .05 duty cycle at max. power.

c) Modulated - amplitude 0-100%, frequency 0-10 MHz with .05 duty cycle at max. power.

Beam Angular Divergency:	$\pm 5^{\circ}$ max.
Pitch Angle Variability:	$0\text{-}180^{\circ}$ magnetic deflection plus vehicle orientation.
Power Input: Voltage(s):	28 VDC
Standby Power:	400 Watts
Average Power:	5 KW
Max. Power:	10 KW
Planned Energy Consumption:	40 KWH/Day Max.

ORIGINAL PAGE IS OF POOR QUALITY

The dimensions and weights of the accelerator and its associated driving system are as follows:

System	Dimensions (meters)	Volumes (m^3)	Weight (kg)
Power Unit (A)*	0.5 x 1.0 x 0.5	0.25	45
Capacitors (B)*	0.5 x 3.0 x 1.5	2.0	540
Power Unit (C)*	1.0 x 1.0 x 0.5	0.5	110
Electron Accel (E1, 2, 3)	3.0 x 1.0 x 1.0	3.0	40.5
Pulse Program Box (E4)**	---	0.1	4.5

OPERATION

Pointing Accuracy. The accuracy of pointing the axis of the electron accelerator should be within ± 6 degrees.

Stability. The spacecraft stability should be 1 degree/sec or less.

Spacecraft Altitude. The altitude of the spacecraft should be known to within 1 degree.

*Note-If the Ion Accelerator MPD Arc and High Voltage Plasma Gun are flown they share some subsystems.

[illegible] located in operator's console.

E-2

Timeline of Operation. The Electron Accelerator will operate for a maximum of 4 hours per day. Standby operation would occur only during this four-hour period.

Complementary Operation. The Electron Accelerator will be used in conjunction with an assortment of particle detectors, electromagnetic wave receivers, ion probes, T.V. and spectroradiometric instruments both for diagnostics of the beam characteristics in the vicinity of the accelerator and for the sensing of remote phenomena generated by the electron beam. The beam diagnostic equipment must have its controls and data output correlated very accurately in time with the accelerator time varying parameters.

Constraints. Operation of the accelerator should take place in the ionosphere at a minimum of 200 km altitude.

CHECKOUT AND TEST

Boresighting Requirements. Because the pointing accuracy is ±6 degrees only a mechanical alignment should be necessary.

Prelaunch Checkout. Low voltage subsystems would be activated and housekeeping parameters observed. Production of accelerated electrons would not be possible as a vacuum environment is required for this operation.

Preflight Calibration. None

Inflight Calibration. Inflight calibration would be performed only if some or all of the AMPS Particle Accelerator Beam Diagnostics Group are also flown: The frequency and duration of calibration are TBD but would be performed at least once, at the beginning of accelerator operation.

CONTROLS

The Electron Accelerator will be controlled from a console in the orbiter aft crew station. The accelerator design would require approximately 12 control functions transmitted to the pallet mounted subsystems for operational control. Included in these are the following:

Subsystem	Controlled Parameter
A	Capacitor Bank Charge Current
C	High Voltage Switch (HVS1) (4 position)
C	PPU1 Output Voltage
C	PPU1 Output Current
E	Control Grid Voltage
E	Control Grid Frequency
E	Cathode Heater
E	Diverging Lens Voltage
E	Converging Lens Voltage
E	X-Z Sweep Coil Voltage
E	Y-Z Sweep Coil Voltage
-	Control Console Power ON/OFF

Details of implementing these controls are TBD. However, the design would probably require analog control lines from the console to the accelerator subsystems capable of supporting signal bandwidths up to 10 MHz. Several of the control functions will need rapid time sequencing. This will be accomplished by a programmable pulse program box. Details of the box are TBD.

DISPLAYS

Approximately 10-20 parameters relating to accelerator operation will require displays. Some are slowly varying while others can occur with repetition rates up to 10 MHz or can be transient (one-shot) pulses with widths as short as 100 nanoseconds. It will be necessary to view the pulse shapes of a number of the rapidly varying parameters correlated in time. In addition, some of these pulse shapes need to be permanently stored as scientific data. Probably the best way to accomplish display is with several

fast digitizers with selectable sampling frequency up to 100 MHz and storage of the digitized pulse shapes in memories for immediate recall to a CRT display (s). The parameters which require pulse shape display are:

System	Parameter
C	PPUII Output Voltage
C	PPUII Output Current
E	Accelerated Current
E	Accelerating Voltage
E	Grid Current

In addition to these parameters all operational and housekeeping parameters should be sampled at a lower rate and displayed, probably on a CRT with commandable digital format. It is estimated that there will be 10 to 20 such parameters.

DATA

Scientific. The electron accelerator will generate slowly varying (approximately DC), modulated (up to 10 MHz) and pulsed (as fast as 100 n sec width) parameters. Scientific data storage will require retaining the pulse shapes of several of the pulse parameters or of sampling several cycles of the modulated parameters and storage of the shapes of the parameters. For the rapidly varying parameters probably the best way to handle the data is with fast digitizers with selectable sampling rates to 100 MHz and storage of the digitized parameters associated memories (already mentioned in Display section), before merging into the shuttle systems. There will be two such accelerator scientific parameters. They are as follows:

System	Parameter	Bandwidth (MHz)	Bit Rate (KBPS)
E	Accel. Current	10	2.5
E	Accel. Voltage	1	2.5

E-5

Housekeeping. There are both approximate DC and time varying parameters to be stored and merged with the scientific data. The peak or average values of the time varying parameters would be stored. At the present time it is estimated that there will be 15-20 of these parameters which should be sampled at .1/sec, digitized to 8 bits for a total rate of approximately 16 bits/sec.

DEVELOPMENT STATUS

Forerunner Instruments. Electron accelerators up to 40 kev energy have flown on several rockets with successful results. Although the current capabilities of the present accelerator are higher than the rocket accelerators, the systems involved should be within the state of the art. In addition, the manual programming offered by the capabilities of the shuttle systems, should add appreciably to the successful operation of the accelerator.

Problems. Two principal operational problems require attention. It must be insured that vehicle neutralization is achieved during electron accelerator operation. Also possible contamination of the accelerator cathode during prelaunch operations and from shuttle contaminants during orbital operations require consideration.

APPENDIX F

OPTICAL BAND IMAGE AND PHOTOMETER SYSTEM (OBIPS)

The objective is to obtain radiometrically quantitative monochromatic images of faint, transient phenomena, such as natural auroras and artificial auroras and glows produced by chemical tracers and other perturbation phenomena. The optical pass-band of each photometer unit has a preselected wavelength interval whose center corresponds to the wavelength of the band or line emitted by a particular molecular, ionic or atomic species. Thus images are obtained of the distribution of particualar excited species.

The pointing is done either manually or by computer. Where the atmosphere is perturbed so as to emit, the direction of the phenomenon is calculated and the units are turned automatically in that direction.

Two units have narrow fields of view and their objective is as photometers to measure the radiance in a small region rather than as imaging sensors. Their direction is controlled manually by observing the TV images of the wider field sensors.

The units are versatile and modular and can be adapted to a wide range of experiments. Interchangeable filters and lenses are part of this versatility.

Configuration - The number of units is TBD, but tentatively there are 4.

A cover is necessary to eliminate contamination of the optical surfaces. A door, located between the lens and sunshade, slides open just before data taking.

Each unit has a sunshade which is collapsible to save space when the instrument is not in use. It is large in order to provide baffling against off-field radiation. An important case is viewing air glows above the horizon during daylight. This requires high capability for off-axis rejection.

The lenses have different angular fields of view and are interchangeable between missions. The apertures are large in order that faint glows may be sensed. They may be either mirrors, transmitting lenses or a combination.

To make the image monochromatic, interference filters, absorption filters or a combination may be used. In some cases the imagery may be broadband. The filters are interchangeable during a mission so that different species may be observed for different experiments. A simple method of accomplishing this is with a turret mount, if space permits.

Two detectors are TV cameras and are interchangeable for different missions. Candidate cameras are the 40 mm Silican Intensifier Target and the microchannel plate with charge coupled detector which is under development. The requirements are high sensitivity, quantitative accuracy and good background suppression. One of the cameras may be UV, depending upon the mission. The detectors for the photometers are photomultipliers, one of which may be UV.
All units are located on the pallet.

Specifications

Spectral Characteristics - The spectral chzracteristics of the instrument are determined by the characteristics of the filter and photocathode. These are selected for the particular experiment or mission.

Resolution and Sensitibity - The angualr resolution of the system is determined by the focal length (and thus the total field angle covered) and the size and resolution of the TV subsystem which should be capable of 200 TV lines at a faceplate illumination of 10^{-6} meter-candles at 5400 A and the spectral response defined by the S-25 photocathode surface, or alternatively a surface of lower resolution and higher sensitivity, or one sensitive in the UV.

Field of View - The field of view of the photometers vary from $\frac{1}{2}^{o}$ to 2° with a variable field stop. The TV systems have fields of view from 5° to 160°, depending upon the choice of lenses.

The off-axis rejection must be as high as possible in order to exclude spurious radiation from lower levels for observations at higher levels where the radiation is faint. This is especially important during daylight. A nominal desired objective for a 10° field lens is 10^{-6} rejection at the axis for radiation 2° outside the field of view. If a 160° lens is used the off-axis rejection does not meet these specifications.

The geometry of the platform and gimbals permits an unobscured field over a full hemisphere or 2 steradians. Booms in the field would cause a severe flare problem during daylight.

One configuration is photometers at two different wavelengths, a TV with a 5° field and a TV with a 20° field. Another is both TV's with the same field but at different wavelengths.

Data Collection Rate - The scan modes are; (1) a conventional TV raster at 30 frames per second, and (2) integration modes at 1/10, 1,2,4, and 8 seconds. All units are synchronized to obtain temporal registration later.

Each TV has a bandwidth up to 4 MHz. The photometer have a bandwidth of 20 khz. The 2 TV units and 2 photometers have a total of 8,040 khz.

Power - Each TV unit requires 20 watts average at 28 volts and a maximum of 40 watts. For 2 units this requires an average of 40 watts. For 2 units this requires an average of 40 watts and 80 watts maximum. The standby power is 10 watts. Each photomultiplier unit requires 5 watts.

Physical Dimensions and Weight - The weight is estimated at 100 kg for 4 units without the steerable platform, however, the baffling shields to minimize stray radiation, may cause the weight to be significantly greater.

The size of the camera unit, filter and lens is 0.2 x 0.2 x 1.3 meters. The shield may be as large as .9 x .9 x 1.8 meters giving a total length of 3.1 meters. It may be possible to fold up the shield when not in use in order to save space.

OPERATION

Pointing Requirements - Pointing accuracy to 2° is required. However, the attitude knowledge must be known to .02 degrees. This accuracy is necessary for the analysis of injection experiments.

Stabiliation and Tracking Requirements - Angualr rates less than 1°/minute are required.

Timeline of Data Collection - Typically, the time and direction of a particular phenomenon has been calculated previously and the instrument pointed toward it. Just before data collection the protective cover or door is opened and the calibration source put in place and turned on. It is turned off and removed. (A design which permits calibration without moving anything may be feasible.)

The selection of the particular mode of operation is made and data taking starts. The location of the glow on the display shows the place where the narrow field photometer should be pointed and the direction of the system is trimmed manually to put the photometer on target. The end of the scientific data is ended manually, for example, when the glow on the display disappears.

The calibration cycle is repeated and the door is closed.

Complementary Operation - The OBIPS is operated to observe the glow caused by atmospheric experiments (as well as passive operation), such as plasma injection, chemical injection, artificial meteor production and accelerator operation.

Constraints - The sun cannot be viewed without damage to instrument. Daylight reduces or eliminates the visibility of the phenomena, however, some daylight observations are planned.

CHECKOUT AND TEST

Boresighting Requirements - Boresight between the photometers must be accurate to 0.01 degree, or the resolution of the photometer if it has a greater angle. This must be checked via the displays. The input to the subsystems to perform this is TBD. In addition, the orientation of the photometers with respect to the spacecraft attitude indication must be known to .02 degrees.

Prelaunch Checkout - Checkout can be accomplished with collimators focused on film images and observers looking at the TV displays for clarity.

Preflight Calibration - A calibration cycle is performed and the measured values compared with a GSE standard source which is placed in front of each subsystem.

Inflight Calibration - The calibration cycle is performed. The source to be used is TBD.

CONTROLS

Mode or Operation	Number of Positions
1. Door open/close	2
2. Sunshield in position	2
3. Aperture control	10
4. Filter selection	3 to 10
5. Gain	10

6.	Mode of TV operation	6
7.	Pointing	NA
8.	Calibrator position	2
9.	Calibrator light on/off	2

DISPLAYS

The displays include once video TV monitor for each system and one light each for door open, sunshield position and calibrator position.

DATA

Scientific Data - The maximum video output is a bandwidth of 4 HMz for each unit, for a total of 8 MHz. For some modes the actual data rate will be considerably less In addition, the photometers have a digital bit rate of 40 kbits/sec.

Housekeeping Data - The following housekeeping parameters are recorded:

Temperature of each TV sensor, accuracy one degree, range - 20 to +40°.

Pointing direction, accuracy .02 degrees.

Time of the middle of every TV picture accurate to 0.003 second, at a maximum rate of 30 times per second.

Control settings of each item listed above

PROBLEMS

Design and Manufacturing - The primary problem areas are the TV selection and development, the pointing problem, the spacecraft location accuracy, the off-axis rejection specification, and calibration. None of these should prevent operation but may require compromises. Considerable work on optimization and trade-offs is required.

The development of TV sensors which go farther into the ultraviolet would give added versatility and utility.

The most critical factor in determining the performance is the TV which must be extremely sensitive and quantitative.

Operational - There are no critical operational problems. A boom or any part of the spacecraft in the field of view will cause flare during daylight and obliterate the images.

A possible solution to the problem of preventing the lower atmosphere from causing flare during daylight is to use the spacecraft to block the radiation reflected from the earth and lower atmosphere.

OBIPS Data Handling Requirements

The total OBIPS data handling requirement for a particular mission depends upon the number of subsystems flown. Requirements established in following sections are preliminary and are likely to be changed later. However, these requirements illustrate the general magnitude of the data handling task.

IMAGING SUBSYSTEM DATA HANDLING

With world time and astonomical look angles appearing within the raster the peripheral data requirement is substantially reduced without serious degradation to the imaging data. It is reasonable at this stage to assume that the remaining 4 kbps of peripheral data can be packed into the vertical interval thus incorporating all relevant data to the subsystem within one channel. There presently exists sufficient information bandwidth within the veritcal interval to easily accommodate the required data.

If transmission (or recording) bandwidth requirements do not permit more than one imaging system to operate at a time field switching may be employed to matrix multiple cources to fit the requirements. This method is further enhanced when all peripheral data is packed in the vertical interval giving each frame the ability to stand alone while remaining completely referenced.

Imaging Subsystem

Video Data

To include world time and look angles within raster via character generator.

Required bandwidth - 4 MHz

Peripheral Data	8 bit words		
Spacecraft position	480/sec	3.84 kbps	
Housekeeping			
Integration Mode		1 word/sec	.04 kbps
Filter Selection			
Camera Temperature		1 word/sec	
Aperture		1 word/sec	
Shutter			
Calibration Light			
Filter Temperature		1 word/sec	
Source ID		1 word/sec	

Video Requirement - 4 MHz

Peripheral and Housekeeping - 3.88 kbps

PHOTOMETER SUBSYSTEM DATA HANDLING

When operating at a typical dynamic range of 2.5×10^5 each photometer will generate roughly 8 kbps of raw data. If only one is operating then the total data requirement including peripheral would be roughly 20 kbps. With both operating the requirement increases to roughly 30 kbps (assuming spacecraft position and world time need not be redundant). Time and position data requirements have been formulated assuming readout every 0.01 sec. It is entirely feasible to reduce the

data requirement by packing the information into the raw photometer data although this requires more signal processing onboard the spacecraft.

In order to handle the 5×10^6 dynamic range within the 8 bit word format it is necessary to generate 156.25 kbps of data with 50 μsec resolution. If, however, one can utilize the 16 bit word format the data requirement drops to 16 kbps with 0.001 sec resolution. In this case the subsystem data requirement would be reduced to roughly 28 kbps. With both subsystems in operation the data requirement would be roughly 44 kbps.

Parameters	Range	Resolution
World Time	365 days	0.01 sec
Spacecraft Position		
a) Latitude	$\pm 90^\circ$	0.001°
b) Longitude	360°	0.001°
c) Altitude	1000 km	0.1 km
Astronomical Look Angles		
a) 1st axis	360°	0.1°
b) 2nd axis	360°	0.1°
Filter Temperature	25°	0.1°
Camera Temperature	50°	0.2°
Field of View	2.5°	0.1°
Wavelength	6000 Å	1 Å

Photometer Subsystem

Raw Data

Dynamic Range	8 bit Format	16 bit Format
5×10^6 (max)	156.25 kbps	16 kbps
2.5×10^5 (typ)	8 kbps	16 kbps

all above provide at least 0.001 sec time resolution.

Time (0.01 sec resolution) 600 words/sec	4.8 kbps
Spacecraft Position (0.01 sec time resolution) 800 words/sec	6.4 kbps
Look Angles (0.2 sec time resolution) 20 words/sec	.16 kbps
	11.36 kbps

Housekeeping

Field of View	1 word/sec	.04 kbps
Wavelength	2 words/sec	
Filter Temperature	1 word/sec	
Shutter	1 word/sec	
Calibration Lamp		
Voltage Supplies		

Photometer Subsystem

	8 bit	16 bit
Raw Data Channel	8-156.26 kbps	16 kbps
Peripheral and House-keeping	11.4 kbps	

Total requirement per subsystem

Dynamic Range	8 bit Format	16 bit Format
max	167.65 kbps	27.4 kbps
typ	19.4 kbps	27.4 kbps

APPENDIX G

TRANSIENT ANALYSIS OF CARDIOPULMONARY FUNCTION

SECTION II - TECHNICAL INFORMATION

1. OBJECTIVES:

The overall objective of the experiment is to obtain information on the time course and magnitude of change of several cardiopulmonary parameters, including heart rate, ventilation and oxygen consumption, during step changes in exercise. A secondary objective is the development of a computer analysis methodology compatible with the format of data collection for the pulmonary blood flow experiment.

2. BACKGROUND AND JUSTIFICATION:

The time course of changes in various cardiopulmonary parameters during step changes in exercise in zero-g has not previously been analyzed. During Skylab, steady-state heart rate, ventilation, oxygen consumption and respiratory quotient were obtained inflight during exercise stress testing. It is proposed that the transient changes in these parameters occurring after step changes in stress are physiologically significant and should be evaluated.

Measurement of total blood volume and exercise cardiac output during Skylab postflight tests revealed significant reductions in blood volume. Reduced blood flow and stroke volume were observable in the immediate postflight period. These changes are presumed to be the result of increased central blood volume inflight. It is possible that the increased central blood volume encountered in zero-g will alter the transient response of heart rate and respiration to exercise. Analysis of transient changes in heart rate, ventilation and oxygen consumption during step changes in exercise pre- and postflight on Apollo 17 and Skylab 1/3 indicate some changes in response to step changes in exercise stress as a result of prolonged exposure to zero-g. The Space Shuttle will provide a logical opportunity to investigate transient changes in cardiopulmonary parameters associated with weightlessness.

Changes in the short-term response to changes in exercise stress may be related to the mechanism of other cardiovascular changes observed during Skylab. This experiment represents a logical extension of investigations done in Skylab and will provide a more detailed examination of cardiovascular mechanisms operable in zero-g as well as during readaptation to the normogravic environment.

3. EXPERIMENT DESIGN:

The experimental exercise protocol for demonstration purposes will be 15 minutes of data collection comprised of 5 minutes each at rest, 75 watts exercise, and recovery. Gas exchange and heart rate will be measured continuously with 5-sec values of heart rate and per breath values of ventilation and oxygen consumption stored by computer for future analysis. This protocol is to be done daily, starting the 2nd day of

ORIGINAL PAGE IS
OF POOR QUALITY

mission. These measurements can be obtained in conjunction with the pulmonary blood flow experiment.

Single time constant transient responses are to be computed for ventilation, oxygen consumption and heart rate for the change from rest to 75 watts. Two time constants are to be obtained for the recovery period. These time constants are to be obtained using a minimum mean squared error criterion (error = actual-computed solution). Time constants obtained on each test will be compared to determine variability of the measurement.

SECTION III - EXPERIMENT ENGINEERING REQUIREMENTS

1. EXPERIMENT ENGINEERING REQUIREMENTS:

a. Equipment Description

1) The experiment hardware for the gas/volume analysis rack is shown in Fig. 1. A respiratory mass spectrometer is located at the top of the rack. This unit was specially modified from the original Skylab configuration. Modifications included changing the inlet leak design to permit breath-by-breath analysis, and the fabrication of a dual capillary inlet system with provision for electronic switching between capillaries. This additional flexibility permits us to analyze breath composition waveforms at the mouth or to batch sample at the exhalation spirometer. A complete control panel is included to operate and monitor the mass spectrometer. Spirometers for measuring expired and inspired gas volumes are located below the mass spectrometer control panel. The expiration spirometer is a standard flight configuration M171 spirometer. The inspiration spirometer was specially constructed by the project engineer, Mr. Lem, to have 7-liters capacity like the exhalation spirometer. This important modification permits one to use the spirometers for flow/volume loops without the necessity of cross-contamination of subjects that one encounters when only one spirometer is employed. The remainder of the rack is devoted to housing experiment gas supply cylinders, regulators, and a special computer switched gas selection manifold. This device permits the computer to select calibration gas mixtures or various breathing mixtures according to their utilization in the experiment protocol.

The experiment will also utilize a collins-type cycle ergometer and a mini-gym isokinetic exerciser modified to provide for an electrical output of the measured forces. The ergometer must be located within 10 feet of the gas analysis rack. When not in use, the mini-gym will be stowed in the storage rack.

The computer equipment configuration is shown in Fig. 2. The system includes a central processing unit (PDP-8e), disc drive, Analog to Digital converter, power controller and operators panel. Digital input-output interfaces mounted inside the CPU, and a graphics terminal to be mounted in another rack. Software for this system will provide for data acquisition, analysis, and display for this and other proposed experiments. The operating system will provide controllers for all input-output devices, and provision for experiments which require 24-hour monitoring of experiment signals. Software for other experiments will be stored on the disc, and any one can be called and executed by a single key entry on the operators panel. The computer will then be dedicated to that experiment until completion, however, the computer will continue to provide

ORIGINAL PAGE IS OF POOR QUALITY

24-hour monitoring as required. Data will be acquired via A/D converter and digital I/O, reduced and presented on either a small digital printer or the graphics terminal.

2) The equipment status is that of a sophistocated breadboard that employs previously flown hardware together with some laboratory development units.

3) Please refer to Fig. 1. The proposed rack configuration for the PDP-8e minicomputer is shown in Fig. 2. The graphics terminal and its electronics are located as shown in Fig. 3.

b. Interface Information

1) No specific location is required for this equipment.

2) No specific mounting requirements have been established at the present time.

3) Utility Requirements:

Item	Electrical				Gases	Fluids
	Power (watts)					
	Standby	Maximum	Voltage	Frequency	Type, Pressure	Water, Liquid H_2, etc
Ergometer		500	115 VAC	60 Hz		
Mini-Gym		100	115 VAC	60 Hz		
Computer Rack		875	115 VAC	60 Hz		
Gas Analysis Rack		200	115 VAC	60 Hz		
Storage/ CRT Rack		150	115 VAC	60 Hz		

4) N/A

5) N/A

c. Environmental Constraints

1) The normal laboratory environment is satisfactory for performance of our demonstration. No specific limitations have been defined at the present time.

2) No known interference with other experiments is anticipated

Data Measurements (TBD)

State the expected data and measurement characteristics the format specified below where applicable. Include additional or different information as necessary.

Equipment Item Used	1 2 3
Parameter To Be Measured	1 2 3
EXPECTED VALUES OF PARAMETER	Units (Meters, GMS, etc.) Average Range
MEASUREMENT CHARACTERISTICS	How Often (Eg. Times Per Day) Duration of Each Total Number in Mission Sample Rate (or CPS of interest)
OUTPUT SIGNAL OF INSTRUMENT	Type (Digital, Analog, or Bilevels) Frequency Range, Low to High (CPS., HZ) Amplitude Range (Eg. 0-5 Volts) Instrument Resolution (% Total Scale)
OUTPUT REQUIREMENTS	No. of Channels Sampling Rate (Times Per Sec., Etc.) Telemetry (Real-Time or Delayed) (Check if needed) Recorder (Returned Tapes) (Check if needed)
TIME IDENTIFICATION METHOD	(Spacecraft Clock or other)

SECTION IV - OPERATIONAL REQUIREMENTS

1. EXPERIMENT OPERATION REQUIREMENTS

a. Preflight Requirements:

The experiment will require two (2) preflight training sessions in order to familiarize the crew with the equipment and procedures. Additionally, three (3) sessions will be required f collection of preflight baseline data.

b. Inflight Requirements:

1) All crewmembers will participate in the experiments

2) One experimental exercise test will be accomplished each crewman on each mission day beginning on mission day 2. T approximate timeline for each test is as follows:

a) 20 min for calibration and instrumentation of s

b) 5 min data collection at rest

c) 5 min exercise at 75 watts and data collection

d) 5 min recovery and data collection

Each test will require the participation of two crewmen, one a subject and one as the observer.

2. FLIGHT OPERATIONAL REQUIREMENTS

TBD

3. DATA SUPPORT REQUIREMENTS

a. Preflight:

N/A

b. Inflight:

TBD

c. Postflight:

TBD

d. Analysis and processing support:

TBD

ORIGINAL PAGE IS OF POOR QUALITY

Figure 1

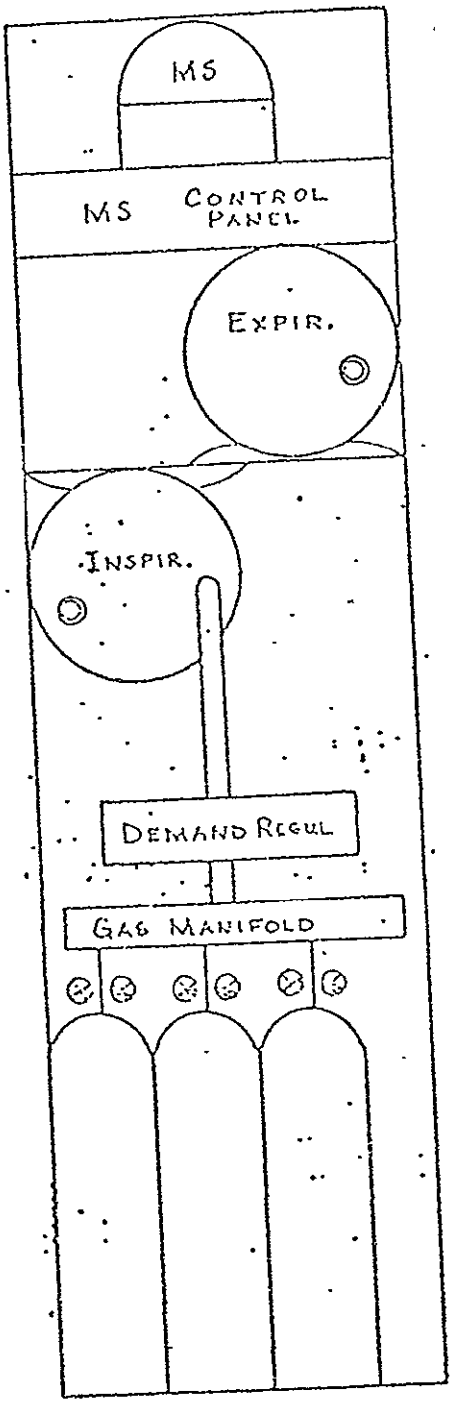

ORIGINAL PAGE IS
OF POOR QUALITY

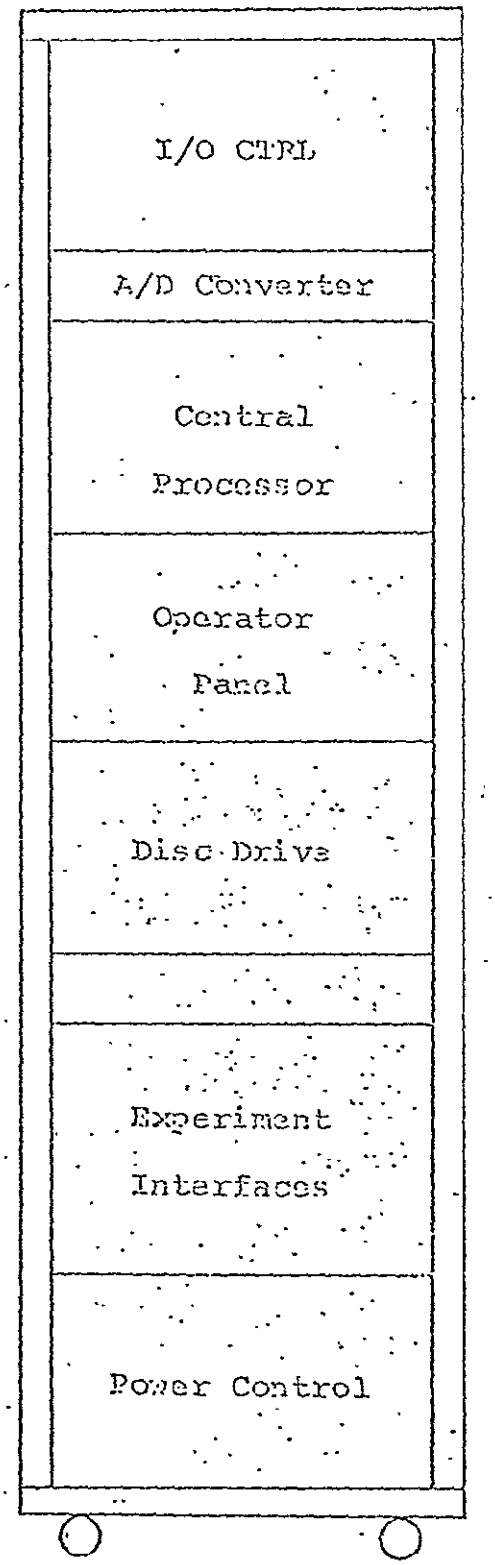

ORIGINAL PAGE IS
OF POOR QUALITY

FIGURE 2. COMPUTER RACK

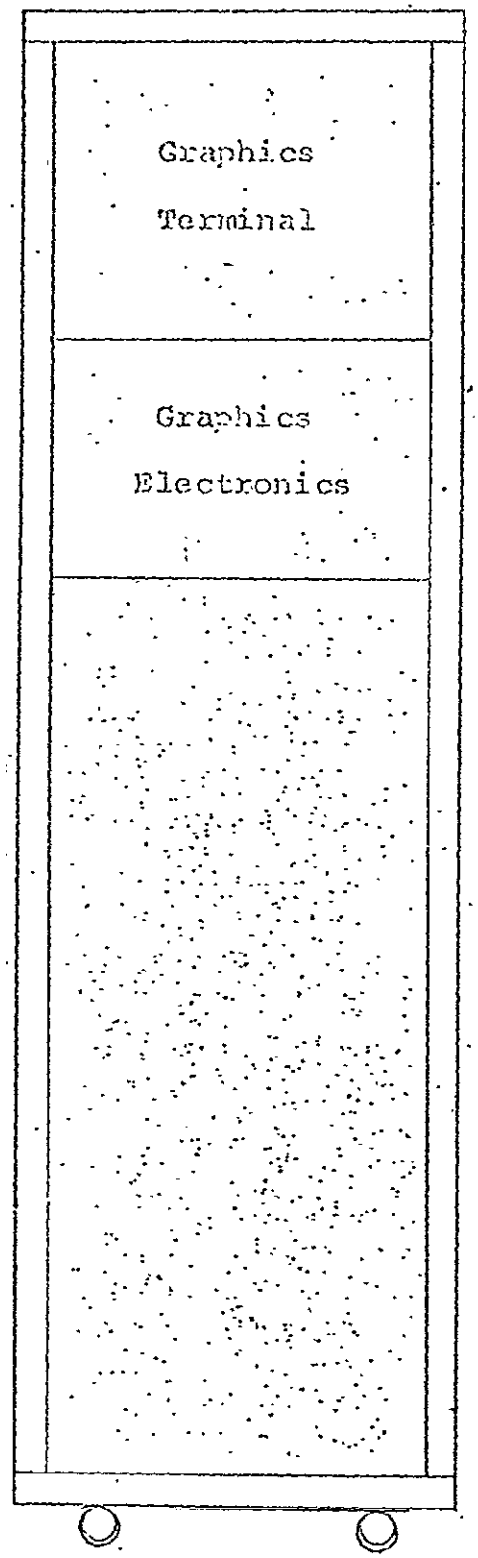

ORIGINAL PAGE IS
OF POOR QUALITY

FIGURE 3

C-3

TRANSIENT ANALYSIS OF CARDIOPULMONARY FUNCTION

Data and Processing

Data Rate and Format:	12 bits/word, 4,000 words/test - intermediate data. Raw data - ECG, volume, % O_2, % C(% N_2 work rate and time. Must store about 1500 words to calcul intermediate data. 7 analog housekeeping parameters.
Duty Cycle:	2 hr./day when used. Could be used more often if necessar
Processing Done By Experiment:	Present computer - A/D conversions control instrumentation, calculation a display of intermediate data.
Ancillary Data Required:	Cabin temperature, pressure, humid and GMT.
Application of Ancillary Data:	To compute conversion factors requi to reduce data.
Quick Look Processing Required:	Report format showing intermediate data in tabular form. Parameters: Heart rate, ventilation, oxygen consumption, carbon dioxide production, work rate and time.
Preprocessing Desired:	Compute intermediate data from raw data. Presently PDP-8e will be programmed to provide intermediate dat
Algorithms Required For Processing Data:	N/A
Processing Time Required:	Ground processing per + CPT; 10 min/test - UNIVAC 1108.
Troubleshooting Aids:	Report format listing intermediate pa meters and selected telemetry (analo and digital points as well as limited science data measurements.
Specific Commands:	TBD
Specific Telemetry Points:	TBD

TRANSIENT ANALYSIS OF CARDIOPULMONARY FUNCTION

Data Processing Flow Diagram

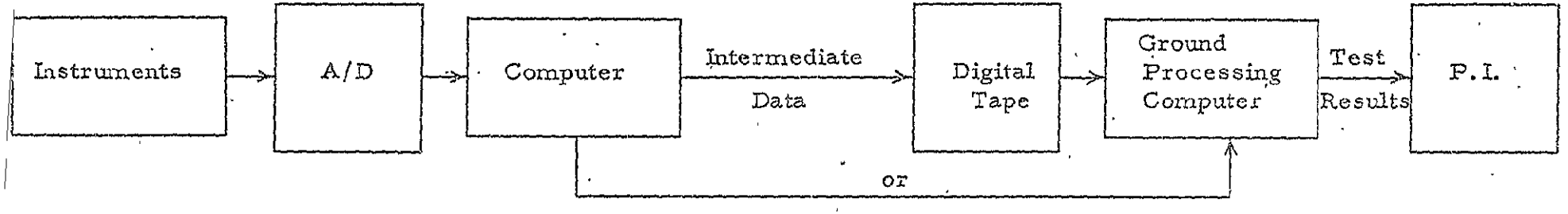

SECTION II -- TECHNICAL INFORMATION

1. OBJECTIVES

a. The general objective of the experiment is to assess the effect of zero-g on the rate of heat transfer from the body.

b. The specific objectives of the experiment are:

(1) To measure convective heat transfer coefficients under operational conditions. Measurements during normal station keeping operations and during controlled work are required.

(2) To determine the effect of sheeting of sweat in zero-g on heat transfer, comfort and the onset of hidromeiosis.

2. JUSTIFICATION

If the effective wettedness of the skin is changed in zero-g, the effectiveness of evaporative heat loss will be changed. Such a change would have effects on thermal equilibrium and comfort. These phenomena must be investigated and understood to assure proper life support and habitability systems in future manned missions.

Maintaining a minimum 15 ft/min air motion in Skylab resulted in a considerable power penalty. In addition, our estimation of thermal comfort and tolerance is based on the heat transfer coefficients. If the heat transfer coefficients are significantly changed, it results in differences in the optimum and tolerable thermal environment.

3. BACKGROUND

a. Brief history of related work:

Engineering investigations of convection in zero-g have been concerned with heat transfer in liquid solid interfaces and with minimizing convection in the high temperature application of sphere formation. Historically, analytical estimations of heat transfer coefficients for the human body using shape approximations with cylinders and spheres have not been useful because of the irregular shape and surface confirmation of the body.

b. Present development in the field:

A considerable amount of empirical work, as well as the development of mathematical models has been done in recent years in the area of thermal equilibrium. However, except for the heat balance studies done during Apollo and Skylab extra vehicular activities, no studies have been done on thermoregulation in space. Adequate instrumentation is available to measure skin temperature, sweat rate, and related environmental factors without a great deal of development required.

4. EXPERIMENTAL DESIGN

The effect of zero-g on heat transfer from the body has not been an operational problem on space flights through Skylab. However, there is reason to believe that zero-g does cause changes in body heat transfer that have not been defined. There is no free convection in zero-g, Minimum forced convection has been required for our zero-g flights, but empirical heat transfer coefficients for the body for low-level forced convection need to be defined. Zero-g also influences the cooling effect of evaporation of sweat because sweat does not drip off of the body. This could significantly effect heat transfer during long periods of exercise or during sustained high temperature exposures.

The baseline convective heat transfer coefficinet in sitting crewmen working at a console and working on an ergometer will be measured under conditions of operational air flow. To arrive at these values, skin temperature sensors, heat flow sensors on the skin, air temperature sensors, and air motion sensors will be monitored for a 30-minute time period for each determination.

Baseline sweat rates and rate of onset of hidromeiosis will be measured on crewmen working on an ergometer for a 60-minute period. Air temperature, wall temperature, humidity, and ergometer work rate will be monitored during this period. At 15-minute intervals, starch-iodine sweat prints will be taken from exposed skin and from dry ventilated and saturated capsules on the skin. At the same

ORIGINAL PAGE IS
OF POOR QUALITY

intervals, accumulated sweat will be removed from the saturated capsule. Total sweat rate will be obtained by body mass measurements before and after the exercise.

H-3.

SECTION III - Experiment Engineering Requirements

A. Equipment Description:

1. The hardware for the DTO to measure convective heat transfer coefficient will consist of a harness of 8 heat flow sensors and 8 thermistors. Heat flow will be measured from the skin at a measured temperature to the environment the temperature of which will be measured by a separate thermistor. The air velocity at a fixed distance from each proble (6 in) will be measured at the beginning and the end of each test period. The hardware for the DTO to measure evaporative heat transfer will consist of the skin temperature sensors, a scale simulating the inflight BMMD, the air velocity measurement device, a bicycle ergometer, sweat capsules and iodine sweat print papers and equipment. If complete data is to be assessed in flight, a dissecti microscope to count sweat gland indications on sweat prints will be required. The sweat prints could be returned and counted postflight. An analytical scale will be required to measure capsule sweat. The sweat containers could be returned and weighed postflight. The equipment definition is in the conceptual stage, the components of the electronic system however are available as off the shelf items.

2. Linearized interchangeable thermistors and a signal condition are available from yellow springs instrument company. It is anticipated that a digiteck scanner (M636) will multiplex thermistor signals from and through the signal conditioner and then to a digite panel meter for digital display and A to D conversion. Both an ana output in the range of 0 to 1-5 volts and a digital 8-4-2-1 BCD out will be available to the computer.

The heat flow sensors are available from thermonetics corporation the milivolt signal from these devices will be scanned with the digitec scanner, amplified and displayed on a digital panel meter with a digital output. Both an analog and a digital output from the heat flow sensors will be available to the computer.

The air flow device is a battery powered device available in the laboratory.

The sweat gland printing equipment and the sweat capsules to be used, are of a type that has been used by the PI and they will be fabricated in-house.

3. a. Skin temperature sensor (8)

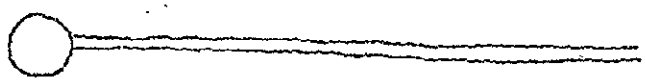

≈ 8 ounces

b. Heat flow sensor (8)

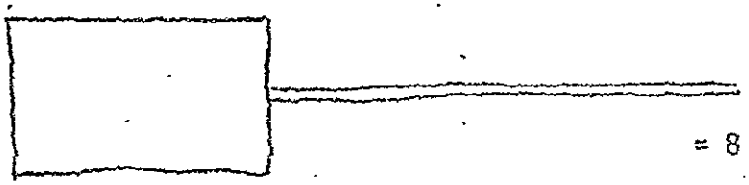

≈ 8 ounces

c. Elastic bands with pockets to hold sensors in place (8)

≈ 8 ounces

d. Scanner for both thermistors and heat flow probes

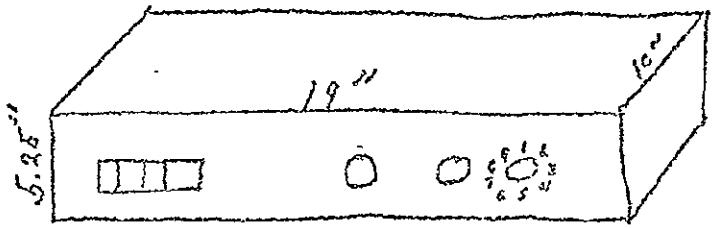

9 lb.

e. Thermistor signal conditioner

4.25" X 5.25 X 6.75"

2 lb.

f. Heat flow sensor amplifier

TBD

= 2 lb.

g. Digital panel meter (2)

3.5" X 4" X 1.8"

1 lb.

h. Air motion sensor

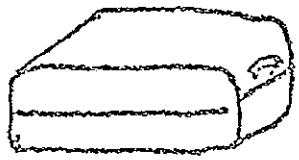

10.75" X 9.75" X 4.375"

(4) 10 lb.

i. Sweat capsule

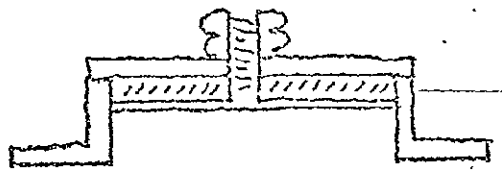

Rubber Compress

H-6

j. Sweat prints

Lucite Cylinder

2 ounces

1.5" circle cut sweat absorption (30)

2 ounces

1.5" circle cut sweat print (50)

air tight screw top bottles for sweat print papers and sweat samples (13)

2 lb/13 bottles

Grid stamp and stamp pad (1)

2 ounces

B. Interface information:

1. Equipment should be located near a console work station and near the ergometer.

2. The electronics will be rack mounted. The sweat print and collection equipment will be located in a drawer.

3. Utilities

	Electrical Power watts	Voltage	Frequend
Thermistor signal conditioner	10 VA	117	60 cy
Heat flow amplifier	TBD	117	60 cy
Scanner	10 VA	117	60 cy
Digital panel meters	4 VA	117	60 cy
Air motion meter	Batteries	14 vts	---

4. Support equipment:

   a. Ergometer

   b. Body mass measurement device

   c. Disecting microscope (desirable)

   d. Small mass measurement device (desirable)

   e. Operational dewpoint measurement.

5. Data management will utilize the PDP8 computer in common with other experiments.

SECTION IV - Operational Requirements

A. Preflight Requirements:

Crew training - the crew must be trained in sensor application, operation of instrumentation and sweat collection and sweat print technique. Time required estimated as three 1-hour periods/crewman.

Prelaunch support:

1. Fresh expendables must be stowed.

   a. Batteries for air motion sensor

   b. Sweat print paper

2. Tare weights of sweat collection bottles must be obtained (unless SMMA is available onboard).

B. Inflight Requirements:

The experiment will consist of (3) detailed test objectives. Each will be repeated two times on each subject for a total of 12 test operations.

DTO 1 and DTO 2 will be measurement of the convective heat transfer coefficient at a work station and on the ergometer at low work rates.

1. Experiment preparation will consist of donning shorts and instrumentation (10-15 min), turning on instrumentation, selection and set up of computer program and measurement of air flow rate at eight locations and input of results in computer.

2. During the 30-minute test time the subject will conduct normal activities of the console or pedal at a low power setting on the ergometer.

ORIGINAL PAGE IS OF POOR QUALITY

3. Postflight requirements will consist of removing the sensors and stowing them and stowing the data..

DTO 3 will measure the effect of zero-g on evaporative heat loss.

1. Experiment preparation:

a. Skin temperature sensors will be donned.

b. Sweat capsule will be donned ventilated and unventilated.

c. With gloved hands, two of three sweat absorption papers will be removed from bottle and placed in the unventilated sweat capsule, and the capsule and the bottle containing one remaining paper will be sealed. (If SWMD is available onboard, three sweat collection bottles will be weighed prior to each performance of this DTO.)

d. The computer program will be selected and set up.

e. Air motion measurements will be made and entered into the computer.

f. Body weight measured.

2. Experiment operation:

The subject will work at a moderately high workload on the ergometer; at the end of 12 minutes will stop and the observer will obtain a body weight, remove absorptive sweat collection papers from unventilated sweat capsule, make sweat prints at an exposed location and from the two sweat capsules, and reload the sweat collection capsule from a fresh bottle. This sequence will be repeated at 27 minutes - 42 minutes - and 58 minutes. At 60 minutes, air motion measurements will be repeated and results entered into the computer.

ORIGINAL PAGE IS
OF POOR QUALITY

3. Post-test operations:

a. The instrumentation will be removed cleaned and stowed.

b. If a SMMP is aboard the three sweat collection bottles will be weighed if not they will be stowed.

c. If a dissecting microscope is aboard, the sweat prints will be stamped with a $2cm^2$ grid and active sweat glands counted for each print. If not the prints will be stowed.

d. The data will be stowed.

4. Routine maintenance

Sweat capsules will have to be washed after each use.

C. Postflight requirements:

1. If an SMMD and a dissecting microscope are not available inflight, sweat weights and print counts will be obtained.

2. The sweat will be leached from the papers with a fixed quantity of water an analyzed.

D. Flight operational requirements:

None

E. Data support requirements:

1. Preflight - PDP8

2. Inflight - PDP8

Spacecraft temperature and humidity measurements. Photographic documentation of sheeting of sweat.

3. Postflight

Return of sweat samples.

ORIGINAL PAGE IS
OF POOR QUALITY

Data Measurements

State the expected data and measurement characteristics in the format specified below where applicable. Include additional or different information as necessary.

Equipment Item Used 1 Temperature sensors
2 Heat flux sensors
3 Air motion sensor

Parameter To Be Measured 1 Temperature
2 Rate of heat flow
3 Velocity

		1	2	3
EXPECTED VALUES OF PARAMETER	Units (Meters, CMS, etc.)			
	Average	73, 93	25 BTU/FT^2	30 ft/min
	Range	70 - 100°F	10-40 BTU/FT^2	10-70 ft/min

		1-2	3
MEASUREMENT CHARACTERISTICS	How Often (Eg. Times Per Day)	12/mission	
	Duration of Each	a one minute channel scan each 5 minutes	8 measurements 5 sec/measurement before and after each run
	Total Number in Mission	450/channel	
	Sample Rate (or CPS of interest)	1 scan/5 min	108

		1	2	3
OUTPUT SIGNAL OF INSTRUMENT	Type (Digital, Analog, or Bilevels)		Both	None
	Frequency Range, Low to High (CPS., HZ)	Low	Low	Low
	Amplitude Range (Eg. 0-5 Volts)	10w UTS/°F	0-5 vts	
	Instrument Resolution (% Total Scale)	1%	5%	5%

		1 & 2		3
OUTPUT REQUIREMENTS	No. of Channels	10	8	1
	Sampling Rate (Times Per Sec., Etc.)	1 min scans at 5 min intervals 4 sec/channel		one 8 po manual sca before & a each test
	Telemetry (Real-Time or Delayed). (Check if needed)		None	
	Recorder (Returned Tapes) (Check if needed)		None	

TIME IDENTIFICATION METHOD (Spacecraft Clock or other) H-12 spacecraft or comput

THE EFFECT OF ZERO-G ON THERMOREGULATION

Data and Processing

Data Rate and Format:	12 bits/word, 2,000 words/test Raw data - skin heat flow, skin temperature, ambient temperature, body weight, sweat capsule weight and sweat prints.
Duty Cycle:	90 min/test, 6 tests/7-day mission.
Processing Done By Experiment Electronics:	A/D conversion of signals, signal conditioning, control of sample rate, calculation and reduction of data.
Ancillary Data Required:	Available air temperature and wall temperature in the experiment area. Data to insure standard conditions of pressure, gas composition and humidity. GMT.
Application of Ancillary Data:	To define test conditions.
Quick Look Processing Required:	Tabular presentation of reduced heat flow data. Parameters-Sweat counts, sweat weights tabulated and sweat chemical analysis.
Preprocessing Desired:	Heat flow and temperature levels will be measured, heat transfer coefficients will be calculated, weighed and averaged for the body.
Algorithms Required For Processing Data:	$HF^1 \div (Ta - Tsk) = H\ coefficient^1$. $\frac{H\ coef^1 \times A^1 + H\ coef^N \times A^N}{N} = Body\ H\ coef$
Processing Time Required:	TBD
Troubleshooting Aids:	Environmental parameters. Scan of heat flow sensors while off the man Analog data from all or selected sensors. Selected housekeeping data.
Specific Commands:	To start multiplexor scans.
Specific Telemetry Points:	TBD

THE EFFECT OF ZERO-G ON THERMOREGULATION

Data Processing Flow Diagram

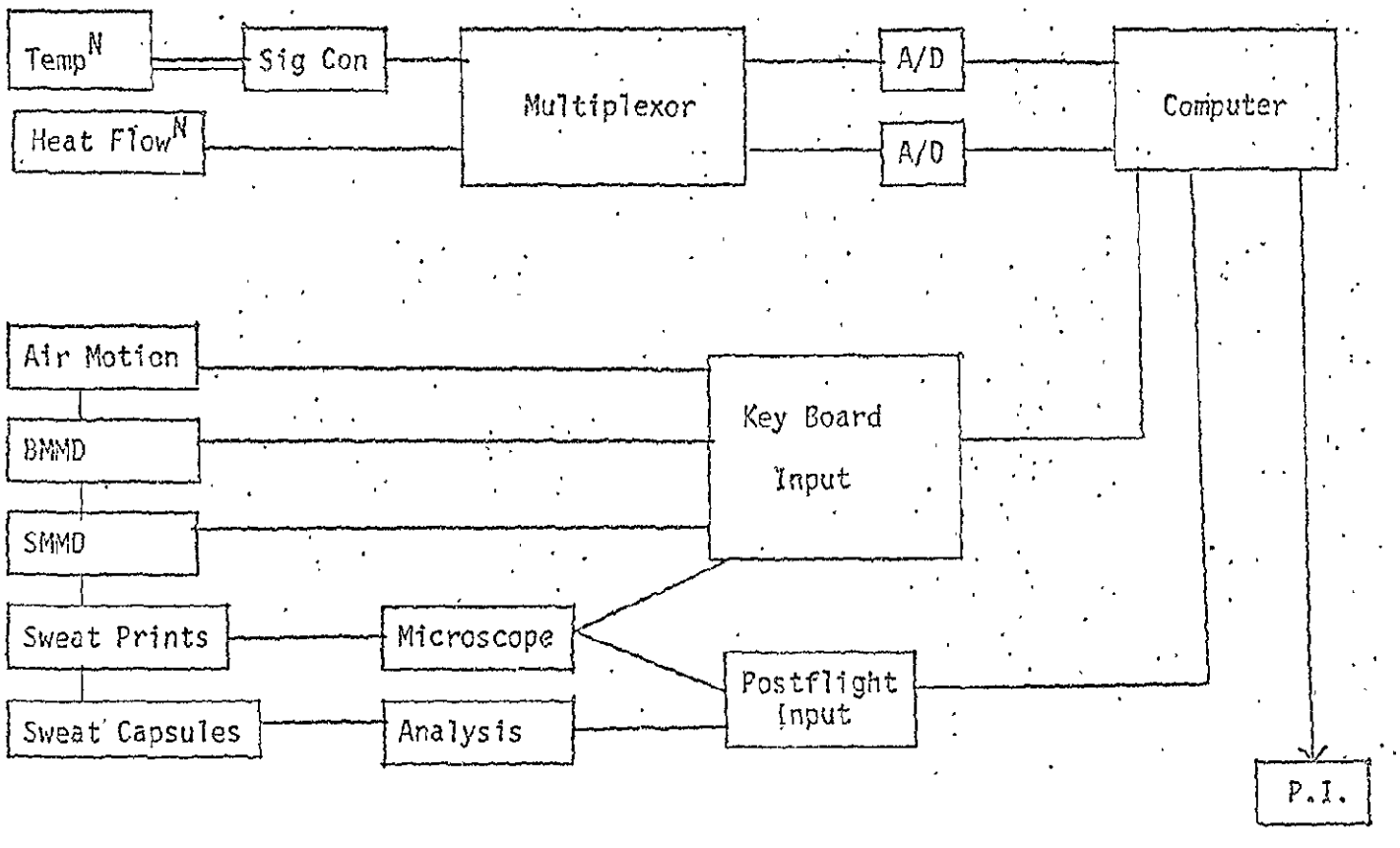

H-14

APPENDIX I

RESPIRATORY PHYSIOLOGY DEMONSTRATION-PULMONARY FUNCTION

SECTION II - TECHNICAL INFORMATION

1. OBJECTIVES:

The prime objective of the present program is to qualify man for long-duration space flight. Another objective is to document and examine the physiological mechanisms involved as the pulmonary system adapts to weightlessness and readapts to normal gravity upon return to earth. A third objective is to define preflight and inflight screening requirements. A final objective is to provide beneficial spin-off from these research efforts in order to improve the quality of pulmonary function evaluation in the normal clinical environment on earth.

2. JUSTIFICATION:

It is known that the integrity and proper function of the body are dependent upon adequate oxygen delivery to and carbon dioxide removal from the body tissues. Thus, the primary function of the pulmonary system is to arterialize the mixed venous blood through elimination of carbon dioxide and addition of oxygen. This is achieved by ventilation which in turn is a function of tidal volume, respiratory frequency, and intrapulmonary distribution of the respired air. Superimposed upon these gaseous factors are the equally important considerations of pulmonary blood flow and distribution. We believe that the measurements proposed herein comprise the minimum number necessary to quantitate pulmonary function in zero-g, thereby providing data to support our contention that man should be qualified for space flights of approximately 2 years duration.

3. BACKGROUND:

Our approach to the evaluation of pulmonary function in zero-g is to develop a comprehensive program including basic research on adaptive mechanisms while determining the requirements for crew selection and inflight medical monitoring. This program represents a logical extension of our knowledge obtained during recent Skylab investigations. Briefly, we cursorily evaluated pulmonary function in flight during Skylab by two methods: 1) vital capacity measurements, and 2) measurement of maximum sustained minute ventilation (maximum exercise testing) and evaluation of ventilatory equivalents (V_E/V_{O_2}) during rest and exercise. Although these measurements provided only gross evaluation of pulmonary function, they were sufficient to show that man can endure a 3-month-duration exposure to zero-g without serious pulmonary impairment. However, this exposure included strenuous physical exercise on a daily basis. Under these conditions, we observed approximately a 10 percent decrease in vital capacity and exceptionally high sustained maximum ventilatory rates. It must be remembered that these high ventilatory rates were possible primarily because of the 5 psia ambient pressure.

ORIGINAL PAGE IS OF POOR QUALITY

3) Please refer to Fig. 1. The proposed rack configuration for the PDP-8e mini-computer is shown in Fig. 2. The graphics terminal and its electronics are located as shown in Fig. 3.

b. Interface Information

1) No specific location is required for this equipment.

2) No specific mounting requirements have been established at the present time.

3) Utility Requirements:

Item	Electrical				Gases	Fluids
	Power (watts)				Type, Pressure	Water, Liquid N_2, etc
	Standby	Maximum	Voltage	Frequency		
Computer Rack	0	875	115 VAC	60 Hz		
Gas Analysis Rack		200	115 VAC	60 Hz		
Storage CRT Rack		150	115 VAC.	60 Hz		

4) N/A

5) N/A

c. Environmental Constraints

1) The normal laboratory environment is satisfactory for performance of our demonstration. No specific limitations have been defined at the present time.

2) No known interference with other experiments is anticipated.

ORIGINAL PAGE IS
OF POOR QUALITY

4. EXPERIMENTAL DESIGN:

a. Experiment Concept: The overall approach to attain the af mentioned objectives is a balanced program including both extensiv inhouse research and selective outside contract efforts. The qual cation of man for long-duration space flight will require extensiv data on numerous subjects during lengthy exposures to zero-g. The experiments necessary to obtain these data are presently being def The measurements made during LS 1-1 provide a limited but definiti data set that includes several common pulmonary function measureme This measurement set can be expanded by the addition of other hard Specifically, we plan to develop a JSC Shuttle payload that will include: 1) a gamma camera system for ^{133}Xe ventilation/perfusion studies; 2) total pulmonary resistance measurements; 3) flow-volum loops (inspiratory and expiratory); 4) ear-oximeter monitor for evaluation of arterial blood oxygen saturation; and 5) foreign gas blood flow measurement techniques.

Therefore, we intend to evaluate pulmonary physiology in t weightless state by the complimentary efforts of inhouse ground-based studies and flight studies. It should be emphasized that additional outside investigators will be included insomuch as thei efforts promise new information. A by-product of these efforts will be the determination of realistic preflight screening measure ments and standards for selection of Shuttle passengers and flight crewmen.

b. Method and Procedures: This represents a logical extensio of the previously successful LS 1-1 pulmonary function demonstrati It is proposed that we integrate our demonstration system with one for exercise and blood flow measurements. The integrated system w utilize a laboratory mini-computer (PDP-8e) with extensive periphe These peripherals will permit more interaction between the investi gator and the subject and will provide the capability for more graphics output at the conclusion of each test.

The hardware utilized for these measurements will be total new both by item and in overall configuration. For example, we propose to furnish a gas/volume analysis rack that will have stand alone capability. This rack will include spirometers for measurement of inspired and expired volumes and flow rates. It will cont a Skylab configuration mass spectrometer that has been modified to include a dual capillary inlet system and a special control pan as well as changes to make it useful in a normal sea-level air pressure/composition gas environment. In addition, this gas analy rack will contain various respiratory gas mixtures required for pulmonary function tests and mass spectrometer calibration (Fig. 1 A second rack will house the PDP-8e mini-computer and its peripher

ORIGINAL PAGE IS OF POOR QUALITY

Therefore, the proposed demonstration will include addition of a flow/volume loop measurement, core-equipment configuration gas analysis and computer racks, and a more sophisticated data management system. Emphasis will be on demonstrating the integration of complementary physiological measurements in order to obtain the greatest yield of scientific information through utilization of core.

SECTION III - EXPERIMENT ENGINEERING REQUIREMENTS

1. EXPERIMENT ENGINEERING REQUIREMENTS:

a. Equipment Description

1) The experiment hardware for the gas/volume analysis rack is shown in Fig. 1. A respiratory mass spectrometer is located at the top of the rack. This unit was specially modified from the original Skylab configuration: Modifications included changing the inlet leak design to permit breath-by-breath analysis, and the fabrication of a dual capillary inlet system with provision for electronic switching between capillaries. This additional flexibility permits us to analyze breath composition waveforms at the mouth or to batch sample at the exhalation spirometer. A complete control panel is included to operate and monitor the mass spectrometer. Spirometers for measuring expired and inspired gas volumes are located below the mass spectrometer control panel. The expiration spirometer is a standard flight configuration M171 spirometer. The inspiration spirometer was specially constructed by the project engineer, Mr. Lem, to have 7-liters capacity like the exhalation spirometer. This important modification permits one to use the spirometers for flow/volume loops without the necessity of cross-contamination of subjects that one encounters when only one spirometer is employed. The remainder of the rack is devoted to housing experiment gas supply cylinders, regulators, and a special computer switched gas selection manifold. This device permits the computer to select calibration gas mixtures or various breathing mixtures according to their utilization in the experiment protocol.

The computer equipment configuration is shown in Fig. 2. The system includes a central processing unit (PDP-8e), disc drive, Analog to Digital converter, power controller and operators panel. Digital input-output interfaces mounted inside the CPU, and a graphics terminal to be mounted in another rack. Software for this system will provide for data acquisition, analysis, and display for this and other proposed experiments. The operating system will provide controllers for all input-output devices, and provision for experiments which require 24-hour monitoring of experiment signals. Software for other experiments will be stored on the Disc, and any one can be called and executed by a single key entry on the operators panel. The computer will then be dedicated to that experiment until completion, however, the computer will continue to provide 24-hour monitoring as required. Data will be acquired via A/D converter and digital I/O, reduced and presented on either a small digital printer or the graphics terminal.

ORIGINAL PAGE IS OF POOR QUALITY

2) The equipment status is that of a sophistocated breadboard that employs previously flown hardware together with some laboratory development units.

3) Please refer to Fig. 1. The proposed rack configuration for the PDP-8e mini-computer is shown in Fig. 2. The graphics terminal and its electronics are located as shown in Fig. 3.

b. Interface Information

1) No specific location is required for this equipment.

2) No specific mounting requirements have been established at the present time.

3) Utility Requirements:

Item	Electrical				Gases	Fluids
	Power (watts)				Type, Pressure	Water, Liquid N_2, et
	Standby	Maximum	Voltage	Frequency		
Computer Rack	0	875	115 VAC	60 Hz		
Gas Analysis Rack		200	115 VAC	60 Hz		
Storage CRT Rack		150	115 VAC.	60 Hz		

4) N/A

5) N/A

c. Environmental Constraints

1) The normal laboratory environment is satisfactory for performance of our demonstration. No specific limitations have been defined at the present time.

2) No known interference with other experiments is anticipa

Data Measurements (NOT APPLICABLE)

State the expected data and measurement characteristics in the format specified below where applicable. Include additional or different information as necessary.

Equipment Item Used	1 2 3
Parameter To Be Measured	1 2 3
EXPECTED VALUES OF PARAMETER	Units (Meters, GMS, etc.) Average Range
MEASUREMENT CHARACTERISTICS	How Often (Eg. Times Per Day) Duration of Each Total Number in Mission Sample Rate (or CPS of interest)
OUTPUT SIGNAL OF INSTRUMENT	Type (Digital, Analog, or Bilevels) Frequency Range, Low to High (CPS., HZ) Amplitude Range (Eg. 0-5 Volts) Instrument Resolution (% Total Scale)
OUTPUT REQUIREMENTS	No. of Channels Sampling Rate (Times Per Sec., Etc.) Telemetry (Real-Time or Delayed) (Check if needed) Recorder (Returned Tapes) (Check if needed)
TIME IDENTIFICATION METHOD	(Spacecraft Clock or other)

SECTION IV - OPERATIONAL REQUIREMENTS

1. EXPERIMENT OPERATION REQUIREMENTS

a. Preflight Requirements:

Crew training can be accomplished in two 4-hour sessions. Baseline data can be obtained during an additional three, 1-hour sessions.

Prelaunch support is required to move the equipment racks into the building 36 mockup area and to provide all necessary interfaces. A suitable vacuum pump will be required as was the case for LS 1-1.

b. Inflight Requirements:

1) Experiment preparation - Equipment should be turned on 1-hour pretest. Calibration of the MS should require only 5 min.

2) Experiment operations - Each subject protocol can be accomplished within 5-10 min. The protocol should be performed each 2 hr during the first 8-hr in flight (total of 4 times) and daily thereafter. Each crewman should be a subject for these measurements.

3) Post-operation tasks - Close-out and cleanup includes cleaning of mouthpiece/valve assemblies and verifying that appropriate equipment has been returned to the standby mode. This should be performed daily and may require 10 min.

4) Maintenance would be performed only in the event of a failure. Calibration is accomplished preceding each data collection period (1.b.1. above).

c. Postflight Requirements:

Access to the computer disc assembly will be required to retrieve data.

2. FLIGHT OPERATIONAL REQUIREMENTS

No specific requirements have been defined. However, it would be helpful if the crew were AOS during equipment activation and calibration with appropriate air to ground voice communications.

3. DATA SUPPORT REQUIREMENTS

a. Preflight - None defined.

b. Inflight - Spacelab temperature and pressure.

c. Postflight - Return of disc packs from PDP-8e to P.I.'s.

d. Analysis and Processing Support - None required.

Figure 1

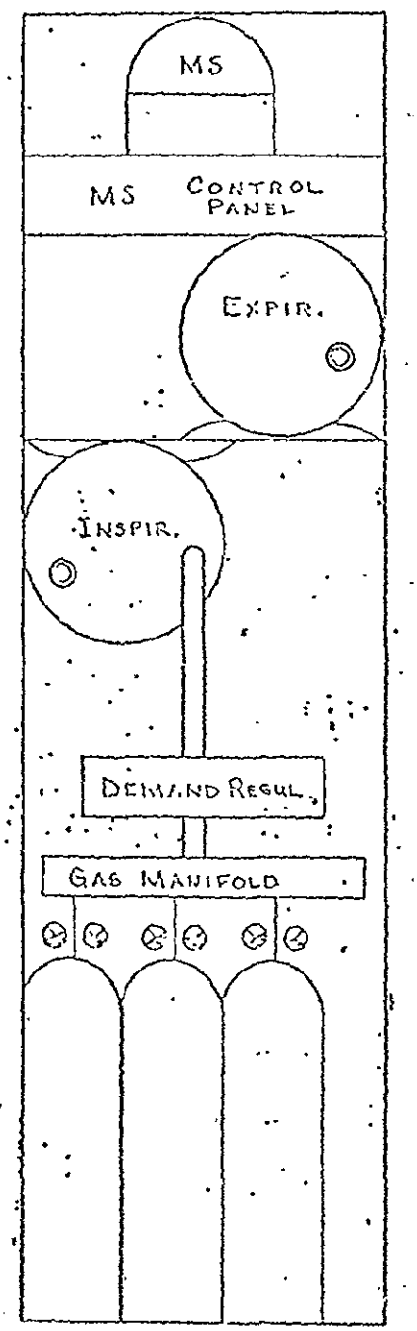

ORIGINAL PAGE IS
OF POOR QUALITY

E16

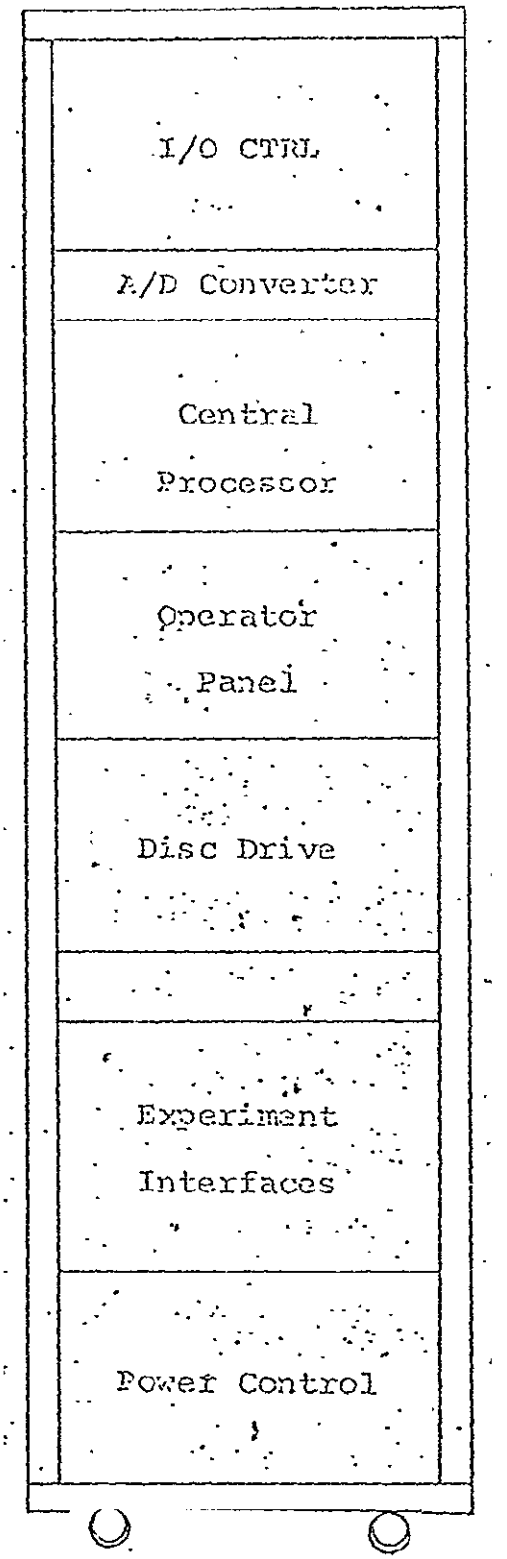

FIGURE 2. COMPUTER RACK

ORIGINAL PAGE IS
OF POOR QUALITY

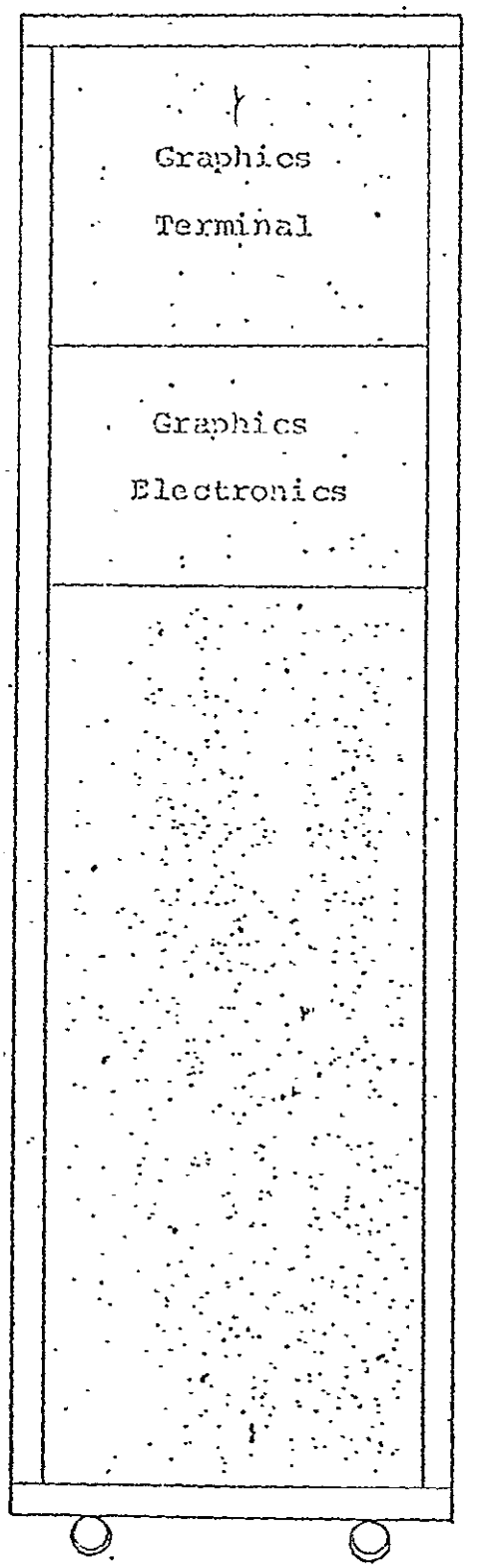

ORIGINAL PAGE IS
OF POOR QUALITY

FIGURE 3

RESPIRATORY PHYSIOLOGY DEMONSTRATION - PULMONARY FUNCTION

Data and Processing

Data Rate and Format:	12 bits/word, 75 words/test 10 analog housekeeping parameters
Duty Cycle:	2 hr/day when used. The instrument could be used more frequently if desired.
Processing Done By Experiment Electronics:	A/D conversion of signals, control of experimentation, calculation of intermediate and reduced data, display of intermediate and reduced data.
Ancillary Data Required:	Cabin temperature, pressure and gas composition. GMT.
Application of Ancillary Data:	Necessary for a meaningful interpretation of the data.
Quick Look Processing Required:	The present report format which prints test results in tabular form is required. It lists the test values for 14 parameters. At present, these values are stored both on the disc and also are hard-copied via a Tektronix CRT-hard copy device.
Preprocessing Desired:	All data are totally reduced at present by the PDP-8e computer associated with the test system and must be transmitted to ground.
Algorithms Required For Processing Data:	N/A
Processing Time Required:	TBD
Troubleshooting Aids:	Certain selected housekeeping, telemetry (analog and digital) points as well as limited science data measurements.
Specific Commands:	TBD
Specific Telemetry Points:	TBD

RESPIRATORY PHYSIOLOGY DEMONSTRATION - PULMONARY FUNCTION
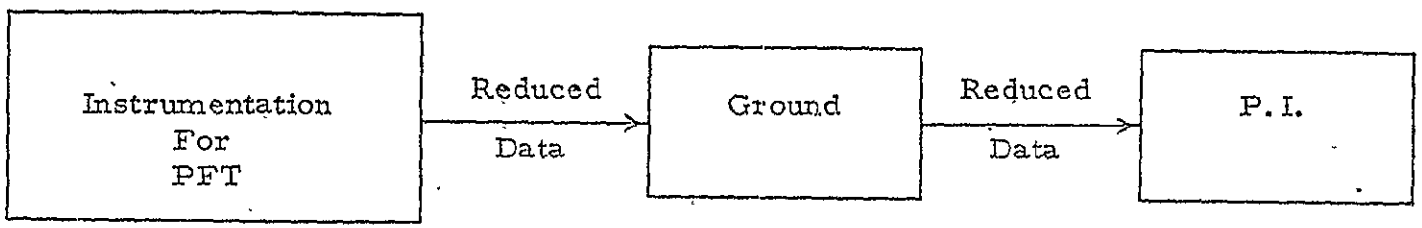
Data Processing Flow Diagram