RADAR SYSTEMS FOR THE WATER RESOURCES MISSION FINAL REPORT

Remote Sensing Laboratory
RSL Technical Report 295-3

Volume I

(same as Volume II, TR 291-2, "Radar Systems for Near-Polar Observations—Final Study Report," Contract NAS 5-22325)

R. K. Moore
J. P. Claassen
R. L. Erickson
R. K. T. Fong
B. C. Hanson
M. J. Komen
S. B. McMillan
S. K. Parashar

June, 1976

Supported by:

NATIONAL AERONAUTICS AND SPACE ADMINISTRATION
Goddard Space Flight Center
Greenbelt, Maryland 20771

CONTRACT NAS 5-22384
Technical Monitor: Dr. James Shiue

THE UNIVERSITY OF KANSAS CENTER FOR RESEARCH, INC.
2291 Irving Hill Drive—Campus West Lawrence, Kansas 66045

THE UNIVERSITY OF KANSAS SPACE TECHNOLOGY CENTER
Raymond Nichols Hall
2291 Irving Hill Drive—Campus West Lawrence, Kansas 66045

Telephone:

RADAR SYSTEMS FOR THE WATER RESOURCES MISSION
FINAL REPORT

Remote Sensing Laboratory
RSL Technical Report 295-3
Volume I

R. K. Moore
J. P. Claassen
R. L. Erickson
R. K. T. Fong
B. C. Hanson
M. J. Komen
S. B. McMillan
S. K. Parashar

June, 1976

Supported by:

NATIONAL AERONAUTICS AND SPACE ADMINISTRATION
Goddard Space Flight Center
Greenbelt, Maryland 20771

CONTRACT NAS5-22384
Technical Monitor: Dr. James Shiue

RADAR SYSTEMS FOR THE WATER RESOURCES MISSION

FINAL REPORT

TABLE OF CONTENTS

Volume I

		Page
1.	INTRODUCTION	I-1
1.1	Program Summary	I-3
1.2	Basic Conclusions and Recommendations	I-36
2.	RADAR CAPABILITIES	I-41
2.1	Summary of the State of the Art	I-41
2.2	Radar Measurement of Soil Moisture	I-42
2.3	Radar Measurement of Snow	I-58
2.4	Radar Measurement of Standing/Flowing Water	I-67
2.5	Radar Measurement of Lake and River Ice	I-73
3.	MISSION REQUIREMENTS	I-78
3.1	Angle of Incidence Requirements	I-78
3.2	Coverage Requirements and Considerations	I-80
3.3	Polarization Requirements	I-86
3.4	Resolution Requirements	I-87

Volume II (same as Volume II, TR 291-2, "Radar Systems for Near-Polar Observations - Final Study Report," Contract NAS 5-22325).

4.	SAR SYSTEM ANALYSIS	II-1
4.1	Introduction	II-1
4.2	SAR Principles	II-1
4.3	Summary of Swath-Widening Techniques	II-4
4.4	Methods to Vary Look Angle	II-12
4.5	Potential Calibration Techniques	II-12
4.6	The SCANSAR Concept	II-13
4.7	Summary of Component State of the Art	II-15

	Page
5. SAR PROCESSOR TECHNIQUES	II-21
5.1 Introduction	II-21
5.2 Range Resolution	II-23
5.2.1 Pulse Compression	II-23
5.2.2 Single-Sideband Radar	II-25
5.3 Along-Track Resolution	II-25
5.3.1 Multi-Look Processing Principles	II-26
5.3.2 Unfocussed vs. Focussed Processing	II-28
5.3.3 Use of a Multi-Look Unfocussed Processor	II-28
5.4 Focussed Along-Track Processing	II-29
5.4.1 Introduction	II-29
5.4.2 1975 Review of Gerchberg's Correlation Processor	II-29
5.4.3 Focussed SAR Processor Using FFT	II-29
5.4.4 Potential of Electronic Fresnel-Zone-Plate Processor	II-32
5.4.5 Comb Filter Processor	II-35
5.4.6 Presumming	II-36
5.4.7 Charge-Coupled Device (CCD) -- Surface-Acoustic-Wave (SAW) Processor	II-36
5.4.8 Charge-Coupled Device (CCD) -- Synthetic-Aperture Processor	II-40
5.4.9 Summary of Component State of the Art	II-42
6. SCANNING SYNTHETIC-APERTURE RADAR (SCANSAR)	II-48
6.1 The SCANSAR Concept	II-48
6.1.1 Introduction	II-48
6.1.2 Coverage Limitations	II-48
6.1.3 SCANSAR Design Theory	II-52
6.1.4 Interpretability Considerations	II-57
6.2 System Parameters	II-62
6.2.1 Introduction	II-62
6.2.2 Parameter Selection	II-62
6.2.3 Conclusions	II-67

	Page
6.3 RADAR SYSTEM AND ANTENNA	II-68
6.3.1 Introduction	II-68
6.3.2 Pulse Compression Techniques	II-68
1. Linear FM	II-68
2. Phase-coding	II-69
6.3.3 Recommended Hardware	II-72
1. Power Output Amplifier	II-72
2. Receiver Front-End	II-72
6.3.4 Antenna Considerations	II-73
6.4 PROCESSOR	II-74
6.4.1 Introduction	II-74
6.4.2 Comb Filter Concepts	II-74
6.4.3 Design Considerations	II-77
1. PRF Diversity	II-77
2. Doppler Slope	II-79
6.4.4 System Design	II-82
1. The Scanning Local Oscillator (SLO)	II-82
a. SLO by Phase Shifting	II-85
b. SLO by Balanced Modulators	II-87
2. The Filter Channel	II-90
a. Serial Analog Memories	II-90
b. Phase-Shifter	II-93
c. Weighting	II-94
d. Gain Stabilization	II-94
3. Detection and Buffering	II-94
4. Timing and Control	II-98
5. Alternative Processor Configuration	II-98
6.4.5 Conclusions and Recommendations	II-100
6.5 MOTION COMPENSATION	II-102
6.6 POWER AND SIZE	II-105
7. CONCLUSIONS	II-108

APPENDICES

Volume III

Appendix A, TM 295-6, "Radar and Radiometer Measurement of Soil Moisture - State of the Art," by Brad Hanson, (March, 1976).

Appendix B, TM 295-11, "Radar Measurement of Snow," by Brad Hanson, (July, 1976).

Appendix C, TM 295-5, "Radar Detection of Water Bodies," by Brad Hanson, (January, 1976).

Appendix D, TM 291-4, "Radar Monitoring of Lake/River Ice - State of the Art," by S. K. Parashar, (January, 1976).

Volume IV (same as Vol. IV, TR 291-2, "Radar Systems for Near-Polar Observations - Final Study Report," Contract NAS 5-22325)

Appendix E, TR 295-1, "A Short Study of a Scanning SAR for Hydrological Monitoring on a Global Basis," by John Claassen, (September, 1975).

Appendix F, TM 295-7, "Comb Filter Theory for Use in a Scanning Synthetic Aperture Radar Signal Processor (SCANSAR)," by Mark Komen (March, 1976).

Appendix G, TR 295-2, "Detailed System Design for the Scanning Synthetic-Aperture Radar (SCANSAR) Using Comb-Filter Range-Offset Processing," by Mark Komen, (July, 1976).

Appendix H, TM 295-2, "A Review of Swath-Widening Techniques," by Stan McMillan, (January, 1976).

Appendix I, TM 295-3, "Synthetic Aperture Radar and Digital Processing," by Stan McMillan, (September, 1975). [Discussion of Gerchberg correlation processor].

Appendix J, TM 295-4, "Methods to Vary Elevation Look Angle and Antenna Beam Pointing Requirements for Spacecraft SAR," by Richard K. T. Fong, (January, 1976).

Appendix K, TM 295-8, "Effects of Different Scan Angles on Ambiguity-Versus-Beamwidth Limitations for SCANSAR," by Richard K. T. Fong, (April, 1976).

Appendix L, TM 295-9, "Focussed Synthetic Aperture Technique Using FFT," by Rod Erickson, (July, 1976, revised edition); 1st printing by Richard K. T. Fong (April, 1976).

Appendix M, TM 295-10, "Use of a Multi-Look Unfocussed SAR Processor on Spacecraft," by Richard K. T. Fong and Rodney L. Erickson, (June, 1976, revised edition); 1st printing by Fong, (April, 1976).

Appendix N, TM 291-8, "Development of Single-Sideband SAR Radar Technique," by Richard K. T. Fong, (May, 1976).

Appendix O, TM 291-1, "State of the Art Radar System Parameters," by Rod Erickson, (August, 1975).

Appendix P, TM 291-3, "State of the Art Integrated-Circuit Hardware for Synthetic Aperture Radar Processing," by Rod Erickson, (June, 1976, revised edition); 1st printing November, 1975.

Appendix Q, TM 291-7, "Evaluation of the Fresnel Zone-Plate Processor For Applications in Spaceborne Synthetic Aperture Radar," by Rod Erickson, (June, 1976).

Appendix R, TM 295-12, "Hardware and Power Requirements of a SCANSAR Correlation Processor," by Rod Erickson, (July, 1976).

LIST OF FIGURES

			Page
Figure	2.1	Angular Response of Scattering Coefficient. (a), (c), and (d) from Batlivala and Ulaby (1976) - 5 Fields with Different Roughness. (b) from Batlivala and Ulaby (1975) - 3 Fields with Different Roughness.	I-46
	2.2	Spectral Response of the Scattering Coefficient for Smooth, Medium Rough, and Rough Fields for High Level of Moisture Content as (a) 0° (Nadir), (b) 10° and (c) 20° Angle of Incidence. (From Batlivala and Ulaby, 1975).	I-48
	2.3	Variation of Scattering Coefficient (at an Angle of Incidence of 10° and HH Polarization) Due to (a) Soil Moisture and (b) Surface Roughness Plotted as a Function of Frequency. (From Batlivala and Ulaby).	I-49
	2.4	Scattering Coefficient as a Function of Surface Roughness at an Angle of Incidence of 10° for Four Moisture Conditions at (a) 2.75 GHz, (b) 3.25 GHz, (c) 4.75 GHz, and (d) 7.25 GHz. (From Batlivala and Ulaby, 1975).	I-50
	2.5	Scattering Coefficient as a Function of Surface Roughness at an Angle of Incidence of 20° for Four Moisture Conditions at (a) 2.75 GHz, (b) 4.75 GHz, and (c) 7.25 GHz. (From Batlivala and Ulaby, 1975).	I-51
	2.6	Optimum (a) Correlation Coefficient, (b) Sensitivity, and (c) Frequency Plotted as a Function of Angle of Incidence for the Medium Rough and Rough Surface Profiles Combined. (From Batlivala and Ulaby, 1975).	I-52
	2.7	Optimum (a) Correlation Coefficient, (b) Sensitivity, and (c) Frequency, Plotted as a Function of Angle of Incidence for All Five Surface Roughnesses Combined. (From Batlivala and Ulaby).	I-54
	2.8	Correlation Coefficient Plotted as a Function of Angle of Incidence for (a) - (c), L-Band (1.1 GHz) and C-Band (4.25 GHz) for HH, HV, and VV Polarizations and (d) for X-Band (7.25 GHz0. (From Batlivala and Ulaby).	I-55
	2.9	(a) Angular Sensitivity, (b) Moisture Sensitivity, and (c) Absolute Error in Moisture Evaluation Plotted as a Function of Angle of Incidence for L-Band	

LIST OF FIGURES (CONT.)

Figure			Page
		(1.1 GHz) and C-Band (4.25 GHz); and (i) a Medium Rough Field, Soil Moisture = 0.4 g/cm, (ii) a Medium Rough Field, Soil Moisture = 0.05 g/cm^3, and (iii) a Smooth Field, Soil Moisture - 0.4 g/cm^3. (From Batlivala and Ulaby).	I-56
	2.10	Angular Response of $\sigma°$ of Short Grass and Short Grass with a 12 cm Wet Snow Cover. (From Stiles, Ulaby, Hanson, and Dellwig, 1976).	I-60
	2.11	Angular Response of $\sigma°$ of Short Grass with 15 cm Dry Powder Snow Cover. (From Stiles, Ulaby, Hanson, and Dellwig, 1976).	I-61
	2.12	Angular Response of $\sigma°$ of Short Grass with 0.5 cm Ice Over 6.5 cm Snow Cover. (From Stiles, Ulaby, Hanson, and Dellwig, 1976).	I-62
	2.13	Correlation Coefficient and Sensitivity for Radar Backscatter from Wet Snow. (From Stiles, Ulaby, Hanson, and Dellwig, 1976).	I-64
	2.14	Diurnal Changes in Snow Scatter at Sierra Snow Laboratory, March 7, 8, and 9, 1976 -- General Trends (Data from Linlor and Clapp, 1976).	I-65
	4.1		II-2
	4.2		II-3
	4.3		II-3
	4.4	Earth Illumination From A Satellite.	II-4
	4.5		II-7
	4.6	Plot of Look Angle vs. Swath for Different Beamwidths.	II-8
	4.7	Planar array antenna aperture.	II-11
	4.8	Off-Nadir angle antenna beams.	II-11
	4.9	Possible calibration system.	II-14
	4.10	Pictorial concept of a scanning SAR.	II-16

LIST OF FIGURES (CONT.)

			Page
Figure	5.1	SAR Processing Flow.	II-22
	5.2	Range Resolution Dependence on Compressed Pulse-width and Look Angle.	II-24
	5.3	Two Methods Used For Producing Multi-Looks.	II-27
	5.4		II-34
	5.5	CCD-SAW Processor Concept.	II-37
	5.6	CCD-SAW Processor.	II-39
	5.7	Charge-Coupled Device Synthetic-Aperture Processor.	II-41
	6.1	Pictorial concept of a scanning SAR.	II-49
	6.2	SAR geometry.	II-51
	6.3	Satellite isodops (top view).	II-54
	6.4	Image cell isodops.	II-54
	6.5	Pixel size	II-60
	6.6a & 6.6b	The SGL volume.	II-60
	6.7	A chirp generator and decoder using SAW dispersive delay lines.	II-70
	6.8	A pulse $N\tau$ seconds long expressed in a binary phase code.	II-71
	6.9	A phase-coded receiver.	II-71
	6.10	Comb filter passbands showing carrier and its side-bands (zero phase shift).	II-75
	6.11	Comb filter passbands phase-shifted to account for Doppler shifting.	II-75
	6.12	A comb filter delay line.	II-75
	6.13	RF to IF frequency translation showing RF bandwidth.	II-83
	6.14	RF bandwidth of 5 MHz filter channel carrier showing Doppler spread.	II-83

LIST OF FIGURES (CONT.)

			Page
Figure	6.15	Representation of comb filter coverage of Doppler spread.	II-83
	6.16	Basic processor.	II-84
	6.17a	Mixer input.	II-84
	6.17b	Mixer output.	II-84
	6.18	SLO.	II-86
	6.19	SLO using balanced modulators.	II-88
	6.20	Reference chirp generator.	II-89
	6.21	A comb-filter channel.	II-91
	6.22	Parallel channel SAM banks.	II-92
	6.23	All-pass phase shift network.	II-95
	6.24	Gain stabilization circuit.	II-97
	6.25	Detector-low pass filter circuit.	II-99
	6.26	Buffer output system.	II-99
	6.27	An alternative filter channel arrangement.	II-101
	6.28	Motion compensation circuit using balanced modulations.	II-104

RADAR SYSTEMS FOR THE WATER RESOURCES MISSION

FINAL REPORT

by

R. K. Moore
J. P. Claassen
R. L. Erickson
R. K. T. Fong
B. C. Hanson
M. J. Komen
S. B. McMillan
S. K. Parashar

1. INTRODUCTION

This is the final report of a study at The University of Kansas for Goddard Space Flight Center under Contract No. NAS 5-22384. The study took approximately one year. Major elements included determination of the state of the art for radar measurement of

Soil moisture
Snow
Standing and flowing water
Lake and river ice,

determination of required spacecraft radar parameters, study of synthetic-aperture radar systems to meet these parametric requirements, and study of techniques for on-board processing of the radar data.

Significant new concepts developed include the following:

Scanning synthetic-aperture radar (SCANSAR) to achieve wide-swath coverage;
Single-sideband radar;
Comb-filter range-sequential, range-offset SAR processing.

The state-of-the-art in radar measurement of water resources parameters is outlined in the Program Summary and the remainder of the report; our knowledge is good about measurement of soil moisture and standing water, fair about measurement of lake ice, and meager about measurement of snow, river ice, and flowing water. The feasibility for immediate development of a

spacecraft water-resources SAR has been established. Numerous candidates for the on-board processor have been examined; while most are feasible, the optimum choice awaits more study.

This work was carried on in parallel with a study of radar systems for polar missions, particularly for measurement of sea ice. Details of the state of the measurement art for these purposes are contained in a parallel report under that contract (NAS 5-22325). Most of the work on radar systems and processing is common to the two projects. The report is organized in such a way that many common elements are contained in common volumes whereas the elements unique to each study are in separate volumes.

The program summary that follows is succinct and presented in bullet-chart form. The main report is more extended, but in many places represents a brief summary of material contained in the appendices. These appendices have all been issued as separate technical reports and memoranda throughout the course of the work, so the project monitors could become aware of developments as soon as they were complete, rather than waiting for the final report.

1.1 Program Summary

1.1.1 STATE OF THE ART - RADAR MONITORING OF SOIL MOISTURE

- Radar responds well to moisture in top few cm of bare soil - well established, but more research needed to pin down details

- Angles of incidence for soil moisture measurement are near vertical - 7° to 22° seems the most useful range - 7° to 15° would be better

- Optimum frequency for soil moisture measurement - 4 -5 GHz - Lower frequencies too sensitive to ground roughness and mean slope; higher frequencies too sensitive to vegetation

- Optimum frequency for measuring soil moisture under crops also 4-5 GHz

- Polarization immaterial in moisture measurement

- Sensitivity to soil moisture less when crops present. Monitoring vegetation independently would allow calibration (best frequency > 13GHz)

- Little information on monitoring moisture under natural vegetation. Grassland should be like crops, but trees may be different

- Resolution requirements for this application are unknown

1.1.2 STATE OF THE ART - RADAR MONITORING OF SNOW

- Radar signal responds to variations in snow properties, expecially moisture
- Data so few that no consistent pattern has been established
- At 35 GHz high-mountain permanent snow scatters nearly isotropically
- In 1-8GHz region wet snow behaves much more like a quasi-specular surface
- Higher frequencies in 1-8 GHz seem superior to lower frequencies because smaller effects from underlying surface
- Radar return from wet Kansas snow correlates inversely with total water content (at angles > 20°)
- Angles of incidence for observing wet Kansas snow should exceed 30°
- Diurnal melting effects on radar snow return are massive

1.1.3 STATE OF THE ART - RADAR MONITORING OF STANDING/FLOWING WATER

- Observation of land-water boundaries is probably the oldest, best established, use of imaging radar

- Boundaries between most land and vegetation-free water are clearly distinguishable on most radars

- Higher frequencies are superior to lower ones for distinguishing land-water boundaries

- Angle of incidence should be as high as possible when trees are absent on banks

- Horizontal or cross-polarized systems are better than vertical polarized systems

- Distinguishing boundaries in marsh lands is more difficult

- Cross polarization may help distinguish marshy boundaries

- Tree-bounded water bodies should be observed at relatively steep incidence angles (10° - 30°) and at lower frequencies

- Little is known of resolution required for monitoring water bodies - research is needed

- Little is known of optimum parameters for distinguishing water surfaces from mud flats - research is needed

- Little is known about monitoring flow patterns with radar, but sketchy observation and physical theory are promising - research is needed

1.1.4 STATE OF THE ART - RADAR MONITORING OF LAKE/RIVER ICE

- Radar ice monitoring on the Great Lakes has been successfully demonstrated in a quasi-operational mode

- No scientific data exist on correlation of returns from different kinds of lake ice with frequency or angle of incidence and little is known about polarization effects - research is needed to optimize systems

- Meager evidence suggests X-band superior to L-band for lake ice monitoring, but both are better than either alone

- Resolution requirements for lake ice monitoring are unknown (existing system 75m x 50 to 600m) - research is needed

- Meager evidence suggests that in Alaska boundaries between areas frozen to bottom and ice on water distinguishable - research is needed

- No information is available on radar return from river ice ice - research is needed

1.1.5 MISSION REQUIREMENTS

Application	Frequency of Coverage	Angle of Incidence	Maximum Possible Swath (435 km orbit)	Polarization	Frequency
Soil moisture	2-10 days	7°-22°	122 km	Immaterial	4-5 GHz
Snow/Freeze-Thaw	Monthly-winter; 6 days-critical periods	TBD	TBD	TBD	TBD
Standing/Flowing Water (open) (forested bank)	Floods on demand; Lake area-21 days Rain pools-6 days Rivers unknown	>30° 10°-30°	Restricted by radar	HH, cross HH, cross	High better Low better
Lake/River Ice:					
Great Lakes	1-2 days	TBD (> 45° used to date)	Restricted by radar	TBD	TBD (High better)
Small Lakes	14 days				
Rivers	TBD				

Note: Where TBD (to be determined) is shown, insufficient information available to specify requirements.

1.1.6 SAR SYSTEM STUDIES

- Technology exists for developing SARs to meet all known water resources mission requirements with on-board processing except single-spacecraft 1-3 day repetition

- Required swath for frequent repetition exceeds that possible with standard SAR techniques

- Wider swath can be achieved with several techniques

- Scanning SAR (SCANSAR) appears most feasible swath-widening technique for modest-resolution small-spacecraft missions

- Techniques exist for pointing SAR on demand, but they increase complexity

- Space-qualified transmitter tubes are scarce, but techniques for building them are known.

1.1.6.1 SWATH - WIDENING TECHNIQUES

- Scanning SAR uses less power than other methods at sacrifice in resolution

- Swath may be doubled without scanning by alternating phase on successive pairs of pulses, but more power required and clutter noise increased

- Swath may be widened by transmitting on different, nearby, frequencies. In effect, each frequency requires a separate radar, but a common antenna may be used

- Outer subswaths require narrower vertical beams to overcome ambiguity, so antennas should be constructed to permit different beam widths

- Multiple separate antennas may also be used to overcome ambiguity problems.

1.1.6.2 VARYING POINTING ANGLE

- Mechanical or electronic scan may be used

- For rare events like flood monitoring, changing spacecraft attitude may be better

- Large enough vertical aperture required to overcome ambiguity at largest expected incidence angle. Only part would be used for normal applications

- PRF and processing must be programmable if pointing angle to be varied

1.1.6.3 CALIBRATION OF SAR

- Only a few attempts have been made to calibrate SAR in the past, but these were reported successful

- Absolute calibration is difficult because antenna absolute gain measurements are difficult, particularly if antenna must be erected in space

- Quantity to be determined is ratio of receiver output voltage (or power) to transmitter power

- One method is to monitor transmitter peak or average power and receiver-processor transfer function separately. In this case a test signal is periodically generated and sent through receiver

- Better method is to make receiver-test signal proportional to transmitter power

- Best approach seems to be slaving amplitude of noise source to transmitter power level and transmitting the noise through receiver

- Another method slaves a test signal chirped like signal from a point target to the transmitter power

- In all practical systems transmitter power should be measured as close to antenna as possible and test signal injected as close to antenna as possible.

1.1.6.4 THE SCANSAR CONCEPT

- SCANSAR (Scanning Synthetic Aperture Radar) seems best approach for wide-swath modest-resolution system

- SCANSAR uses step-scanned beam with each position having swath width limited by ambiguity, but combination not so limited

- SCANSAR involves compromise between swath width and resolution

- With SCANSAR,antenna length need not be long as in wide single-swath system. Area of antenna is fixed, but length/height ratio may be adjusted

- Usual compromise between azimuth resolution and number of independent samples averaged exists, but number of samples averaged is reduced by number of beam positions used

- Same processor can be used for each beam position, so total processor size small compared with achieving same coverage with single beam

- SCANSAR best understood by an example

SCANSAR EXAMPLE

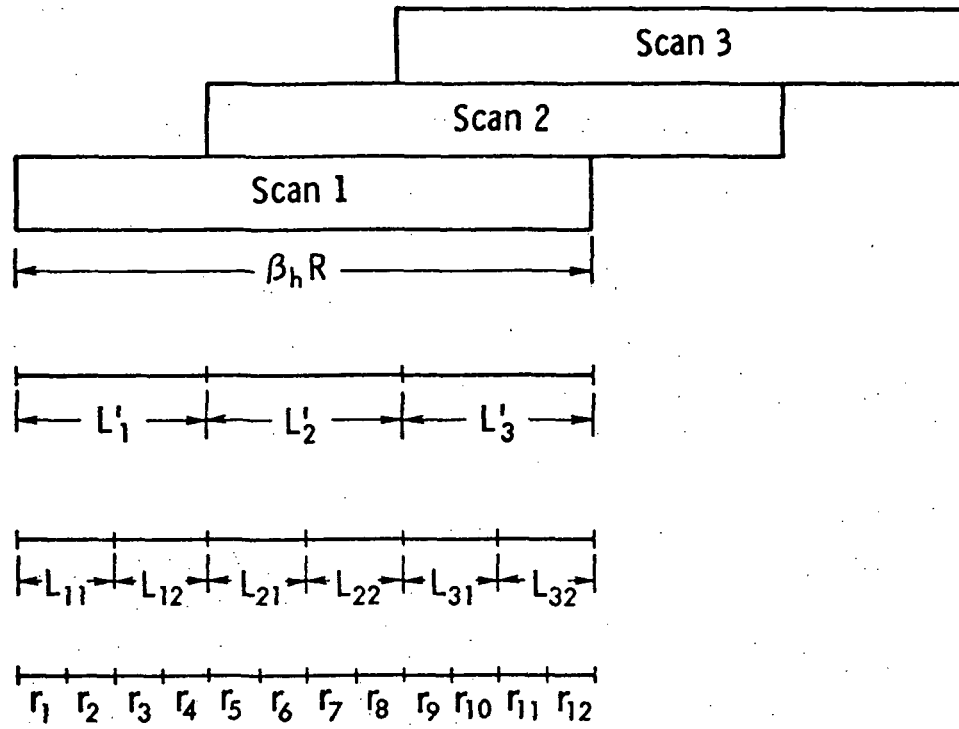

- 3 beam positions
- 2 looks per beam position
- Azimuth resolution improvement over real aperture: 12
- Total distance available for building a synthetic aperture: $\beta_h R$
- Total distance available for building synthetic aperture for 1 scan position: L'
- Distance used for one synthetic aperture (1 look): L
- Azimuth resolution: r
- During each distance L processing necessary for all 12 r's within beam at that time
- End effects neglected here
- Since only 1/6 of potential aperture used for each look, potential resolution without scanning would be $r/6$; i.e., 72 cells could be imaged. Real aperture in this case is $r/3$

RECOMMENDED SCANSAR SYSTEM FOR WATER RESOURCES MISSION

• Frequency:	4.75 GHz
• Coverage (angle from nadir):	7°-22°, 22°-37°
• Azimuth Resolution:	50 to 53 m (inner swath) 50 to 57 m (outer swath)
• Range Resolution	150 to 62 m (inner swath) 50 to 33 m (outer swath)
• Spacecraft Altitude:	435 km
• Antenna Size:	3m long by 1.07 m high
• Independent Looks:	6 (inner swath) 3 (outer swath)
• Beam Positions:	5 (inner swath) 10 (outer swath)
• Swath Width:	122 km (inner);124 km (inner, spherical earth) 150 km (outer);157 km (outer, spherical earth)
• Transmitter Peak Power:	142 watts
• Transmitter Av. Power:	15 watts
• Pulse Compression:	100:1
• Bus Bar Power:	197 watts
• Telemetry Rate:	3.85 Mb/s

All calculations based on plane-earth geometry. Minor modifications for spherical-earth geometry do not affect conclusions.

1.1.6.5 SAR SYSTEM COMPONENTS

- Both array and reflector antennas have been flown in space for many years. The technology is well advanced

- Electronically scanned antennas have been flown in space

- Mechanisms for successfully erecting large antennas in space have flown successfully

- Traveling-wave tubes (TWTs) with peak power in the 2 kW range have flown in space in the 13-14 GHz range. Scaling to lower frequencies should be easy

- Average powers as high as 100 watts have been reported for communication satellite applications

- Solid-state amplifiers are available with adequate power at L-band and probably at S-band. The state of this art is advancing rapidly upward in both power and frequency

- Non-cryogenic parametric amplifiers have been reported with noise figures from 0.36 dB at L-band to 1.23 dB at 20 GHz

- Noise figures for TDAs are in the 4.5-6.5 dB range between 1 and 20 GHz

- Noise figures are rapidly improving for both bipolar and FET transistor preamplifiers. 3.5-5 dB can be achieved with FETs in the 6-18 GHz range

- Below 6 GHz bipolar transistor amplifiers have good noise figures. A 1.7 dB figure has been quoted at L-band

- Mixer-amplifier (IF) front ends can now be obtained in the 4-8 dB noise figure range

1.1.7 SAR PROCESSING STUDIES

- Processing studies have concentrated on systems to work aboard the spacecraft

- Range compression is desirable and probably required in view of the transmitter state of the art

- Single-sideband transmission and processing appear to offer power savings of a factor of 2 in the transmitter and possibly in the processor. This new technique for radar needs further research before it can be applied to ambiguity-limited SAR

- Multiple-look processing permits use of much poorer azimuth resolution than possible with single-look processing. A theoretical basis has been established for evaluating the multi-look-resolution tradeoff

- Processor complexity for each look decreases inversely as the <u>square</u> of the azimuth resolution, so the maximum resolution feasible should be used

- Effective resolution for interpretability is determined by the <u>area</u> of the pixel, so trades may be made between range and azimuth resolution. Improving either resolution costs power, so no general statement can be made as to the best compromise between range and azimuth resolution

- Multi-look unfocussed processing is much simpler than focussed processing, and resolutions attainable at lower spacecraft altitudes may permit its use

SAR PROCESSING STUDIES (CONTINUED)

- Most previous designs for synthetic-aperture electronic processors operate on range-gated video, one range and azimuth element at a time

- Much effort here has been devoted to range-sequential rather than range-gated processors, since this method offers potential hardware and power savings (not necessarily realized in our early designs)

- Analog storage elements (CCD and serial analog memory -- SAM) appear to offer many advantages over digital techniques for some types of processor

- Use of SAM devices in comb filters (range-sequential processing) has been investigated in detail for the proposed SCANSAR

- Range-gated processors investigated include the following:

  + Multi-look unfocussed processor
  + Correlation processor (1975 review of spacecraft radar processor proposed at Kansas by Gerchberg in 1970 doctoral dissertation)
  + Focussed processor using FFT
  + Electronic-Fresnel-Zone Plate processor proposed at Kansas in 1965
  + CCD-SAW (surface acoustic wave) processor proposed at Royal Radar Establishment in 1975

- Range-sequential processors investigated include the following:

  + Comb-filter unfocussed processor using SAM devices
  + Comb-filter semifocussed processor using SAM devices and tunable filters
  + Comb-fitler semifocussed processor using SAM devices

SAR PROCESSING STUDIES (CONTINUED)

and fixed filters (recommended for SCANSAR)

+ Texas Instruments - JPL CCD synthetic-aperture processor

1.1.7.1 MULTI-LOOK UNFOCUSSED SYNTHETIC APERTURE

- Example shows 3 elements for a 3-look processor
- Resolution length = aperture length $L = \sqrt{\frac{\lambda R}{2}}$

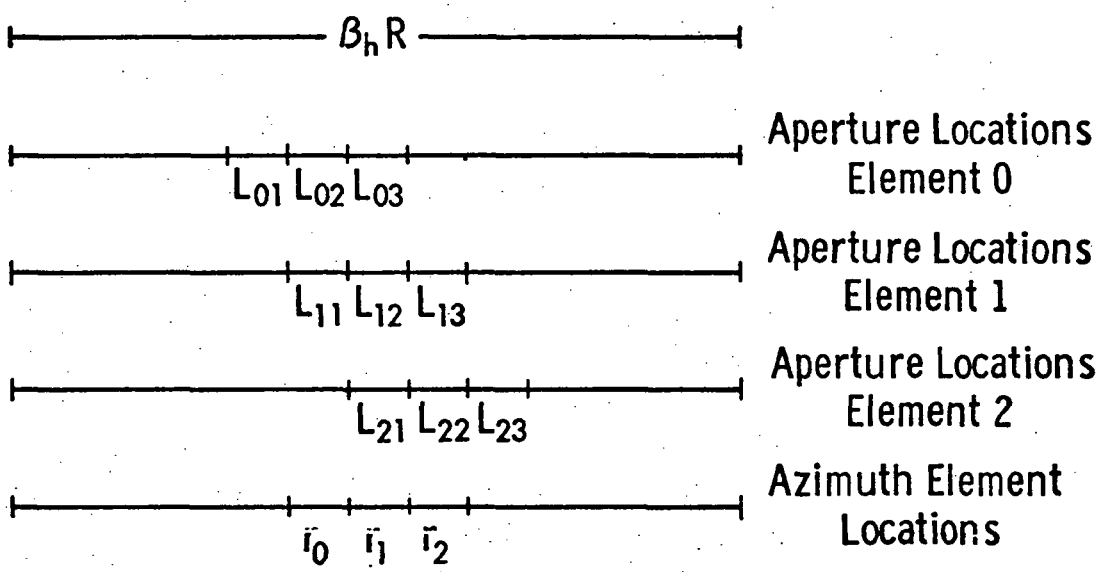

- Only a small part of potential aperture ($\beta_h R$) is used for each look
- In this example each aperture is 1/9 potential aperture; therefore 9 looks would be possible instead of the three shown
- Normal sideviewed elements are r_o for L_{02}, r_1 for L_{12}, r_2 for L_{22}
- If only a single look for each element, a single simple processor is required; in this case 3 such processors are required
- Either range-gated or range-sequential (comb-filter processors may be used.

MULTI-LOOK UNFOCUSSED SYNTHETIC APERTURE (CONTINUED)

Basic Single-look Range Gated Processor

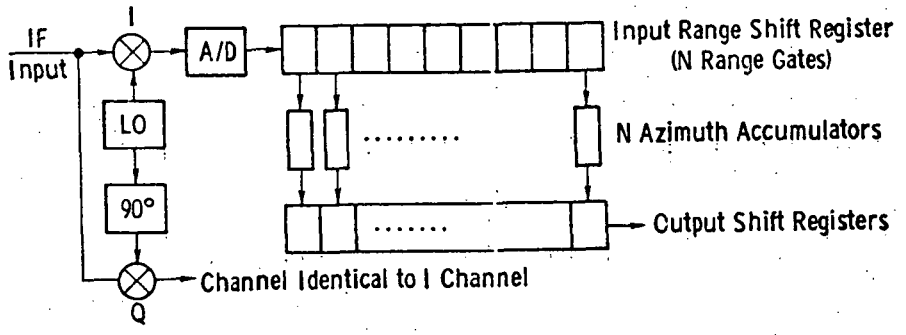

Input range shift register filled with each pulse and then transferred to azimuth accumulators. Output shift registers filled each aperture.

Basic Single-look Range Sequential Processor

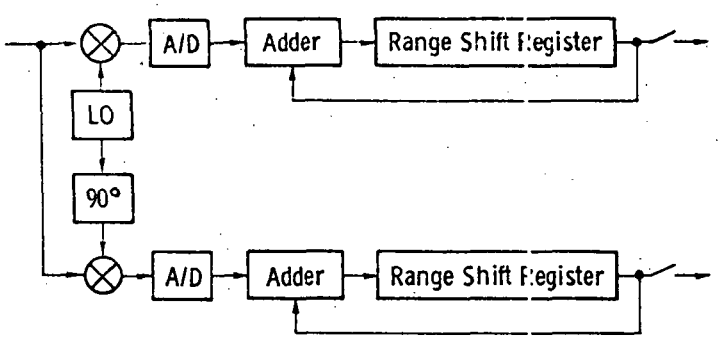

Contents of range shift register is shifted out and recirculated after adding to each incoming pulse; at end of an aperture the register contents are shifted out and the feedback loop is inhibited.

This processor could also be implemented without the A/D converters using SAM or CCD shift registers.

- Processor I and Q outputs are combined appropriately by taking square root of the sum of their squares

EXAMPLE:

SCANSAR

Spacecraft altitude:	435 km
Frequency:	4.75 GHz
Swath:	122 near swath 152 far swath

MULTI-LOOK UNFOCUSSED SYNTHETIC APERTURE (CONTINUED)

Cross-track resolution:	150 m near swath 50 m far swath
Range of Nadir Angles	7° - 22°, 22° - 37°
Power Consumption:	64 Watts (both sides)
Along-track resolution:	117 m (7°) to 131 m (37°)

1.1.7.2 CORRELATION PROCESSOR

- One way to view synthetic-aperture processing is correlation with a replica of the return signal from a point target, including especially the phase (and therefore frequency) variation

- The correlation processor is a range-gated processor

- The figure illustrates the operations for an input in the form of a range-gated bipolar video signal

- Separate channels identical to the one shown in the figure must be provided for each range element and for each azimuth element being processed at a single instant (see diagram for SCAN-SAR example; there 12 cells are processed simultaneously and the processor may be reused for each look and beam position, so the number of processors is 12 x (number of range elements))

EXAMPLE (SCANSAR)

Spacecraft Altitude:	435 km
Ground Velocity:	7.2 km/s
Carrier Wavelength:	6.3 cm
Real Aperture Length:	3 m
Range of Nadir Angles:	7° - 22° (near swath) 22° - 37° (far swath)
Swath Width:	122.3 km (near swath) 152 km (far swath)
Number of Looks Averaged:	6 (near swath) 3 (far swath)
Number of Scan Cells:	5 (near swath) 10 (far swath)

Range Resolution:	150-63 m (near swath) 50 m (far swath)
Azimuth Resolution:	39.5 - 49 m
Power Consumption (both sides):	170 watts

EXAMPLE (Updated Gerchberg processor)

Satellite altitude:	900 km		
Frequency:	10 GHz		
Antenna length:	8 m		
Sqaure pixel size: (slant range res. = azimuth res.)	20 m	50 m	100 m
Number of subapertures: (independent samples)	5	12.5	25
Swath width (2 sides):	400 km		
Power required:	650 W	104 W	26 W

This example assumes the processor designed by Gerchberg (1970) with 1975 components. The power consumptions shown may vary from real requirements however they illustrate the relation of power consumption to resolution.

Algorithm Employed With Quadrature Detection *

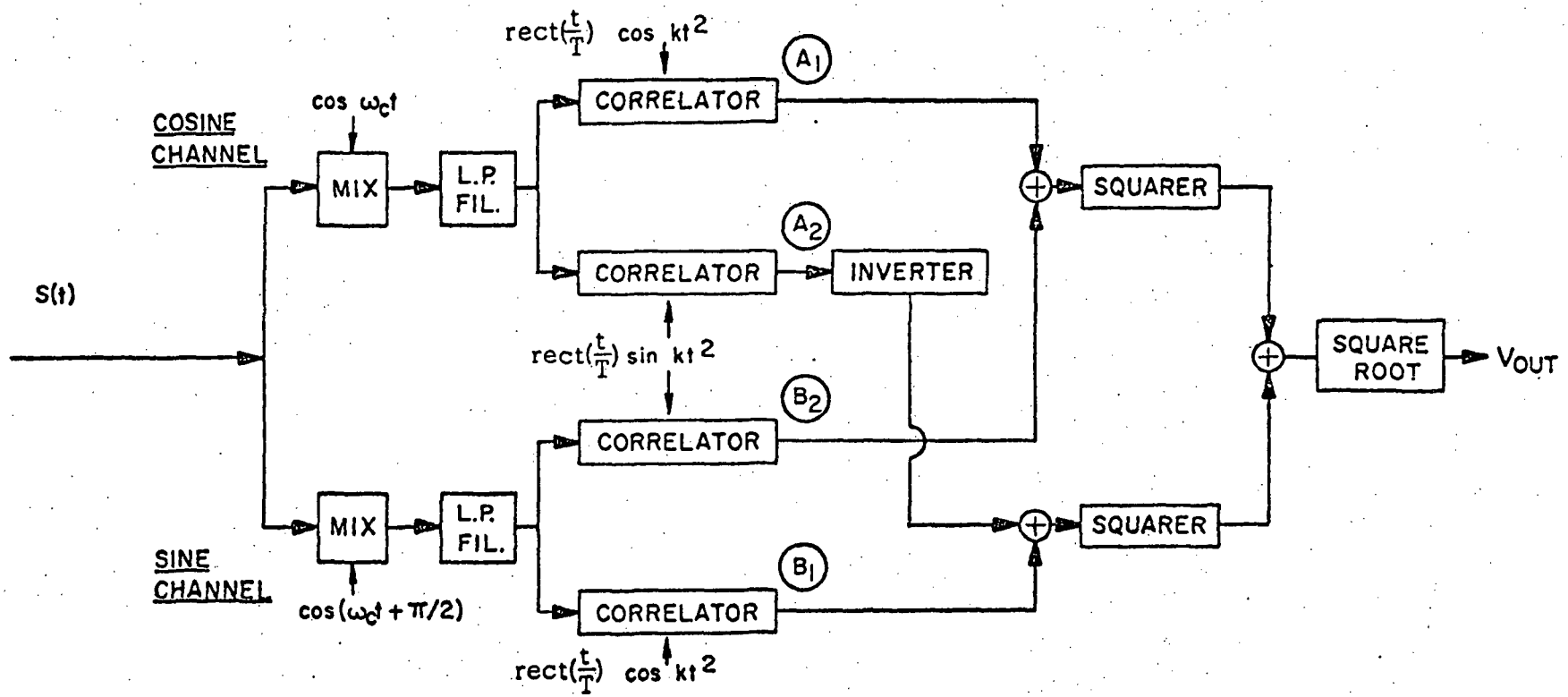

* Gerchberg processor.

1.1.7.3 FOCUSSED PROCESSOR USING FFT FILTERING

- This is a range-gated processor

- Methods for implementing the FFT are discussed in TM 295-9 (Appendix L)

- This type of processor has been constructed for various military aircraft radars

- A major part of this processor (and the other range-gated processors) is the "corner-turning memory" -- principle illustrated below:

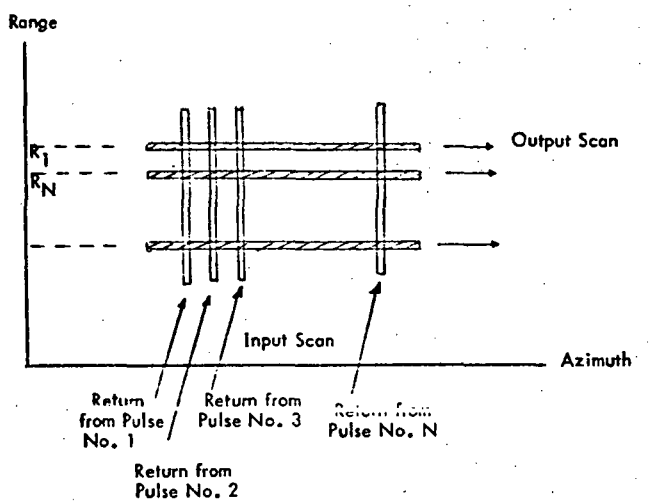

- Since the corner-turning memory must contain all azimuth and range elements (samples) required to produce a synthetic aperture for each range, it can be very large; its size is inversely proportional to the <u>cube</u> of resolution for square pixels, so the advantage in processing for modest resolution is very great.

- Basic elements of the system are shown below:

FOCUSSED PROCESSOR USING FFT FILTERING (CONTINUED)

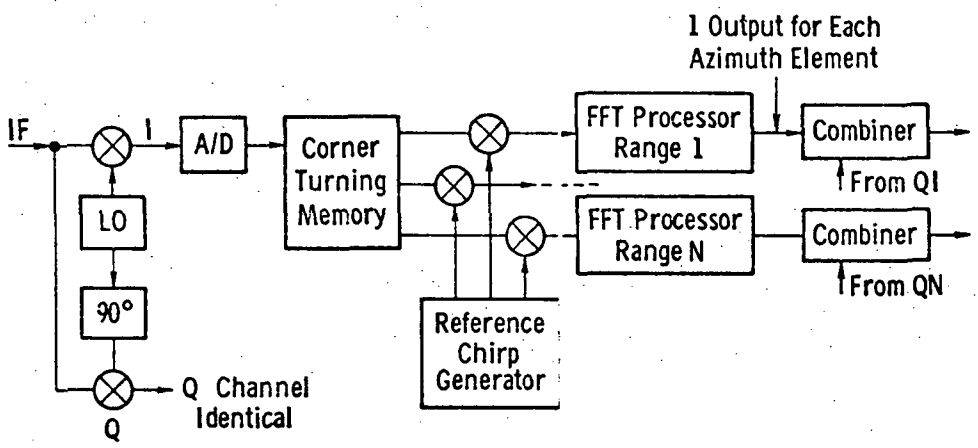

- Numerous other implementations are possible but all contain same elements; for example, I and Q outputs can be combined as complex numbers in the corner-turning memory and multiplied by complex numbers from the reference chirp generator

- Reference chirps for different ranges are different unless depth of focus is very large

EXAMPLE:

Spacecraft altitude:	435 km
Frequency:	4.75 GHz
Antenna length:	3 meters
Swath width:	122 km, 152 km (using SCANSAR technique)
Range of nadir angle:	7°-22°, 22°-37° (both sides)
Range resolution:	150 m (ground) at 7°, 50 m from 22°-37°
Number of beam positions:	5 (7°-22°), 10 (22°-37°)
Number of subapertures (independent looks):	6, 3
Power required:	90 Watts

1.1.7.4 ELECTRONIC FRESNEL-ZONE PLATE PROCESSOR

- A Fresnel-zone plate in optics has dark bands (zero transmission) in regions of a plane that would contribute to destructive interference. Illumination with a collimated beam results in focussing at a point.

- A synthetic-aperture analog of the Fresnel-zone plate was first proposed in 1965 by Moore and Buchanan at Kansas; this system has been examined in considerable detail here

- The Fresnel-zone-plate processor inverts rather than eliminates out-of-phase wave components, so they add in phase

- Implementation of the electronic Fresnel-zone-plate processor is similar to implementation of an unfocussed processor, except for a programmed premultiplication by ± 1 and the need for more processors because the synthetic aperture is longer. This simplicity of implementation was the reason for studying this approach

- Straightforward implementation of the EFZP processor results in large sidelobes for modest-resolution, short synthetic-aperture systems, but the sidelobes are more reasonable for longer apertures

- Weighting the signals from the outer edges of the aperture improves sidelobes if the weights are stronger than at the center (opposite to normal antennas)

- Because of the high sidelobes in the modest-resolution systems needed for the water resources mission, the EFZP processor in the forms studied does not seem meritorious

- Additional research should be conducted to test some other approaches to sidelobe reduction for this system

Example of Electronic Fresnel-Zone-Plate Processor (SCANSAR)

Spacecraft Altitude:	435 km
Carrier Wavelength:	6.3 cm
Real Aperture Length:	3 m
Ground Velocity:	7.2 km/s
PRF:	7.2 KHz
Range of Nadir Angle:	7° - 22°, 22° - 37°
Swath Width:	122.3, 152.0
Number of Looks	4.2
Range Resolution:	150-63 m, 50 m
Azimuth Resolution	37.4 - 39.9 m, 39.9 - 46.3 m
Number of Scan Cells	5, 10
Fresnel Zones Processed	4
Power Consumption (both sides):	~ 131 Watts

1.1.7.5 CCD-SAW PROCESSOR PROPOSED AT RRE

- A processor for range-Doppler radar has been proposed and preliminary tests made at Royal Radar Establishment in England: this processor appears a likely candidate for SAR

- The CCD-SAW processor has been examined but not studied in detail, since we became aware of it too late for extensive study

- The processor seems to offer advantages both in simplicity and in low power consumption

- Corner turning is accomplished in a CCD analog device with many memory elements on one chip (1000 on the test version)

- Matched filtering to separate azimuth elements is accomplished in a surface acoustic wave chirp line (dispersive delay filter)

- Basic structure of the processor is illustrated below: (zero-offset version)

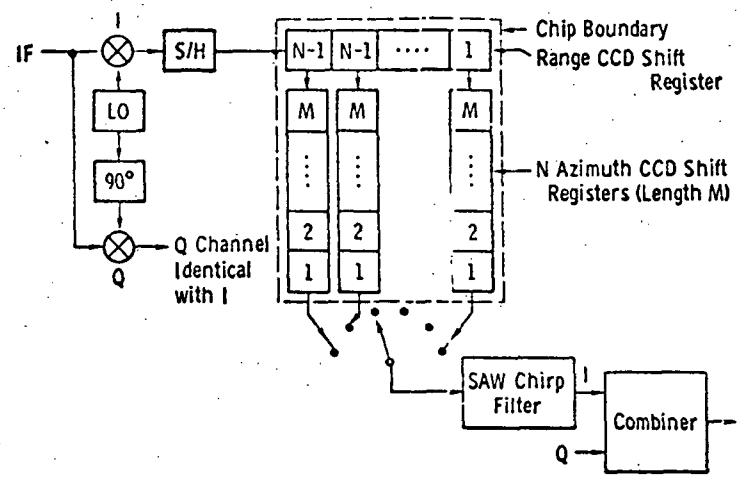

- Range shift register fills with signals from one pulse, after which these are transferred in parallel to azimuth shift registers

- Azimuth shift registers fill slowly, but are emptied quickly so a SAW frequency-sensitive delay element can "dechirp" them at same rates as when it is used for range dechirping

- Range-offset processor would not require I and Q channels but would require higher sampling rate and more range-shift-register positions.

1.1.7.6 RANGE-SEQUENTIAL SEMIFOCUSSED COMB-FILTER PROCESSOR

- A range-sequential comb-filter processor offers significant advantages because no corner-turning memory is needed
- In the comb-filter processor azimuth filtering is accomplished on each line of the spectrum of the received pulse train simultaneously in one device
- The principle of the comb filter is illustrated in the accompanying figure
- The basic form of the comb filter is shown in Figure 3. A pulse is read into a delay element such that the delayed pulse arrives at the input summing point in phase with the incoming signal; thus signals at the right frequencies add in phase after many cycles and signals at other frequencies drift in and out of phase
- The resultant filter response is shown in Figure 1 for zero phase shift ϕ. If K is constant with loop gain unity, each "tooth" of the "comb" has a sinx/x response. Tooth spacing is the PRF and tooth width is inversely proportional to the number of pulses recirculated
- The passband characteristic shown in Figure 1 is identical with that for the unfocussed processor (range sequential version) shown earlier. That is, the range-sequential unfocussed processor is in fact a comb-filter processor
- To accomplish focussed processing efficiently, Doppler shifted filter bands are required, as shown in Figure 2. The Doppler offset for the filter is set by the value of ϕ, which must be the same for all the spectral components
- Delay lines are temperature sensitive, so the best way to implement the delay for the comb filter is with shift registers (analog or digital). In the detailed SCANSAR design, SAM analog shift registers are used

RANGE-SEQUENTIAL SEMIFOCUSSED COMB-FILTER PROCESSOR (CONTINUED)

- A comb-filter processor could also be built using SPS (serial-parallel-serial) CCD shift registers and gamma correctors as described later for the Texas Instruments - JPL processor. The number of SPS elements required would be much less for the comb-filter processor
- The problem of implementing the frequency-independent phase shift has been solved, but in a rather complex way. Research is needed to establish a simpler way to accomplish this phase shift
- The SCANSAR-proposed processor uses range offset (the signal is processed about a carrier frequency somewhat more than half the IF bandwidth). It does not require I and Q channels
- The basic SCANSAR processor is diagrammed below:

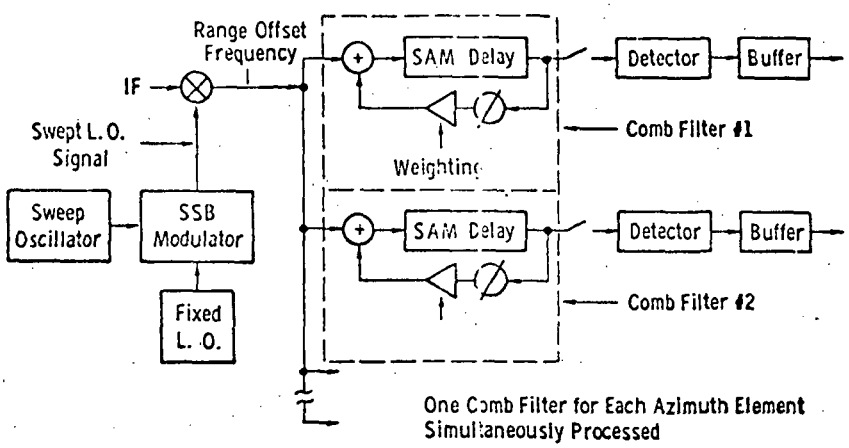

- The scanned (swept) local oscillator removes the azimuth chirp from the incoming signals
- SAM devices contain their own sample-and-hold circuits. These are clocked at about twice the IF bandwidth
- Buffers also use SAM devices

RANGE-SEQUENTIAL SEMIFOCUSSED COMB-FILTER PROCESSOR (CONTINUED)

EXAMPLE (SCANSAR)

Spacecraft Altitude:	435 km
Frequency:	4.75 GHz
Incidence Angle Ranges:	6.7° - 22.4° 22.1° - 37.0°
Swath Widths:	129 km 157 km
Processor Power (both sides):	184 W
Range Resolution:	150 m @ 7° to 49 m @ 22°
Azimuth Resolution:	50 m @ 7° to 53.5 m @ 22°
Number of Looks:	6
Equivalent 1-Look Pixel:	150 x 6.9 m to 49 x 7.4 m

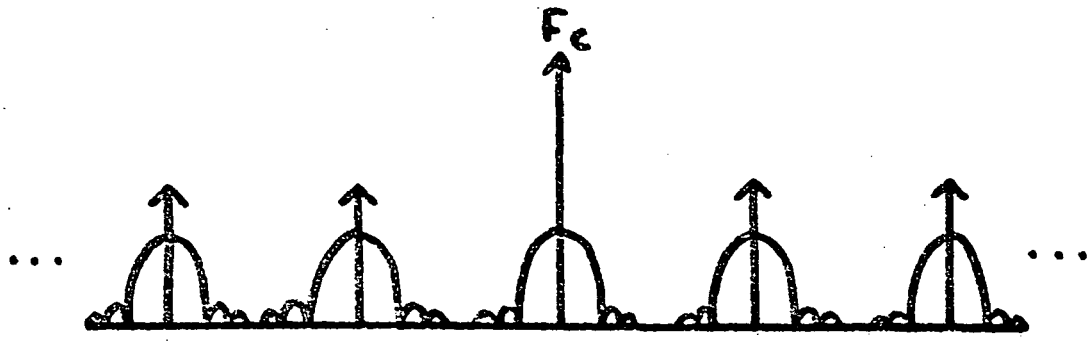

Figure 1. Comb filter passbands showing carrier and its side-bands (zero phase shift).

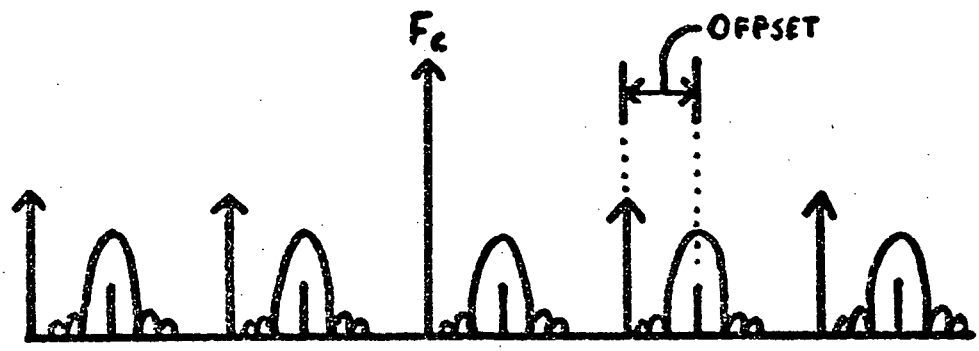

Figure 2. Comb filter passbands phase-shifted to account for Doppler shifting.

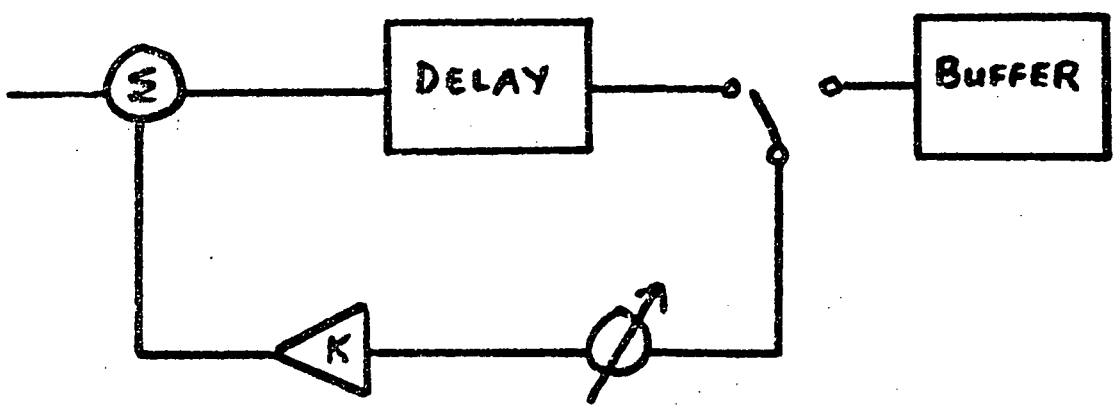

Figure 3. A comb filter delay line.

1.1.7.7 CCD RANGE-SEQUENTIAL SYNTHETIC APERTURE PROCESSOR (TI/JPL)

- This processor was developed in preliminary conceptual form under AAFE and JPL programs

- Operation of the processor is more like a synthetic antenna array, rather than a Doppler beam sharpener or matched filter, than other focussed processors

- Power consumption for the prototype system was estimated as only 7 watts for a 10 km swath with 25 meter resolution

- Low power consumption was achieved by use of large-scale integrated analog circuits designed for low power consumption; presumably several of the other implementations studied could reduce power consumption signficantly by use of special LSI chips

- Major problem with CCD devices is the amount of charge left behind during the charge transfer process. This processor solves this problem 2 ways: use of SPS (serial-parallel-serial) CCD registers and use of a "gamma-correction" circuit to compensate after passage through each CCE register

- Details of this processor became available to us too late for extensive study

- Operation of the processor is presented below in simplified form:

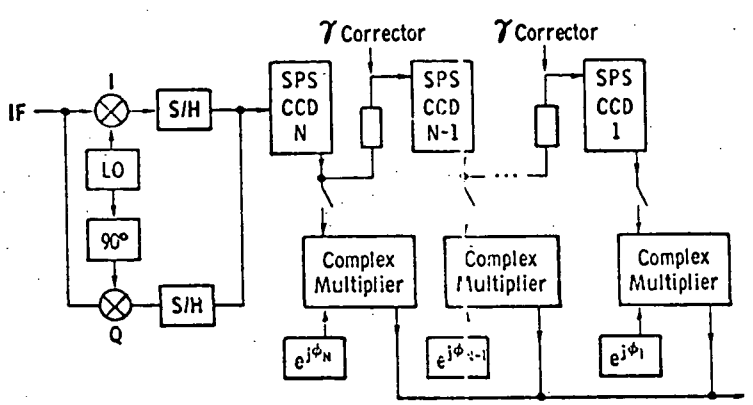

CCD RANGE-SEQUENTIAL SYNTHETIC APERTURE PROCESSOR (TI/JPL) (CONTINUED)

- Implementation shown for aperture N pulses long
- Each SPS CCE register contains samples for one entire range line; I and Q samples are alternated in the register
- After N pulses have been received and stored, outputs for each range line transfer in parallel through the complex multipliers that correct the phase for the position in the aperture and the outputs added in parallel
- Outputs are read out one range element at a time, so that each output sequence is a synthetically processed range line
- In most applications the processor must be replicated for multiple looks
- Use of SPS CCD elements with gamma correction might permit improvements in some of the other processors discussed here, but this has not yet been studied
- Use of interleaved I and Q samples with complex multiplications might permit improvements in some of the other processors discussed here, especially the comb-filter processors, but this has not been studied

1.2 BASIC CONCLUSIONS AND RECOMMENDATIONS

1.2.1 Conclusions

- 1) The state-of-the art of knowledge of radar backscatter from soil moisture, standing water, and lake ice is adequate to permit immediate development of spacecarft radars for monitoring these quantities.
- 2) The state-of-the-art for synthetic-aperture radar and its components will permit immediate development of radars for small spacecraft for the water resources missions.
- 3) The best frequency for monitoring soil moisture is in the 4 - 5 GHz range.
- 4) The best angles of incidence for monitoring soil moisture are 7° to 15° with angles to 22° acceptable.
- 5) The best frequencies for other applications are unknown, but indications are that they will not be lower than 4 GHz.
- 6) The best angles of incidence for other applications are unknown, but they are certain to exceed 22°.
- 7) The resolution required for the different elements of the water resources mission is unknown.
- 8) The resolution chosen for a mission should be as poor as possible because system complexity increases rapidly with improving resolution.
- 9) The SCANSAR approach is viable as a way to achieve the coverage required for those elements of the water resources mission for which the resolution compromises inherent in SCANSAR can be tolerated.
- 10) The best approach for on-board processing is still an open question requiring further study, but several approaches are known to be workable.

1.2.2 Recommendations

- 1) The time has come to proceed with development of spacecraft SAR for the water resources mission.
- 2) Since the SCANSAR concept seems to offer the best hope for achieving the required coverage, its development should be vigorously pursued.
- 3) Much research is still needed on interaction between radar signals and terrain features relevant to the water resources mission:

  a) The required resolution for the different elements of the mission should be established as soon as possible.

  b) A definitive statement of the true requirements for intervals between repeated coverage needs to be established as soon as possible.

  c) Research into the radar return from snow should be pursued vigorously and at once, particularly using ground-based spectrometers that can, in combination with careful surface measurements, establish optimum frequencies, incidence angles, and polarizations.

  d) Research into radar measurement of soil moisture should be continued, with particular emphasis on non-agricultural soils and the effects of natural vegetation including both rangeland and forests.

  e) Research into radar return from Great Lakes ice should be vigorously pursued with surface-based spectrometers and careful surface measurements establish optimum frequencies, incidence angles, and polarizations and to improve the ability to correlate radar returns with ice types.

  f) Research into radar returns from shallow lakes should be pursued using both ground-based and aircraft systems to establish whether it is indeed possible to tell the regions frozen to the bottom from those where water lies unfrozen beneath the ice.

  g) Research into radar returns from river ice should be conducted using airborne imaging radars, especially during the spring ice-jam season.

h) Research into ability to distinguish flood boundaries under different relevant conditions should be conducted with airborne radars. For mud flats where flood waters have recently receded, ground-based spectrometer measurements are also in order.

i) Research into distinguishing boundaries in marshland should be conducted both with the spectrometer and airborne radar having cross-polarized capability.

j) Research into distinguishing boundaries of water under trees should be conducted with airborne systems at both high (X-band) and low(L-band) frequencies.

k) Research into distinguishing river flow patterns should be conducted with fine-resolution imaging radars having their gain optimized for the water instead of the surrounding land.

- 4) Research and development are needed on SAR systems for the spacecraft water resources mission, although existing technology is adequate for initial flights:

a) Further research should be conducted on swath-widening techniques. In particular, emphasis should be placed on evaluating in detail the effects of scanning and pointing on the radar system parameters, the potential of multiple-frequency systems for different parts of the swath, and the potential of multiple simultaneous beams to cover different parts of the swath with one frequency.

b) Antenna optimization studies should be conducted for multibeam and scanning systems. Relative merits of reflectors with multiple feeds and multiple-beam arrays (scanned or switched) should be evaluated.

c) Erection techniques for the different kinds of antennas should be evaluated and compared.

d) Experiments should be conducted to evaluate the merits of different schemes for calibration of synthetic-aperture radars.

e) The SCANSAR should continue to be evaluated and a complete

preliminary design made. Critical areas should be evaluated experimentally.

f) Traveling-wave tube development should be undertaken to make available a family of space-qualified tubes at frequencies and power levels appropriate to the water resources mission.

g) Analytical and experimental development should proceed on various forms of "distributed radar" (separate transmitting and/or receiving elements for different parts of the antenna), as this approach both provides redundancy and the possibility for earlier use of solid-state transmitter amplifiers.

h) Details of the motion compensation problem should be analyzed for specific candidate spacecraft, including both the requirements of the radar and the availability of adequate compensation signals from the spacecraft orientation and other systems. If inadequate compensation signals are available, study of means for obtaining them either from the spacecraft or internally to the radar should proceed.

- 5) Research and development are needed on SAR processing systems for use on-board the water-resources-mission spacecraft:

  a) The comparative studies undertaken here should be continued and expanded. Particular attention should be given to determining power requirements for the different systems under identical mission conditions.

  b) Potential application of single-sideband methods to SAR should be studied in more detail analytically, and experiments should be conducted in the laboratory to verify performance estimates.

  c) The use of binary phase codes for large time-bandwidth-product radar pulse compression should be studied in detail, since this approach is more natural than chirp frequency modulation for some of the processing elements.

d) Application of the CCD shift registers, particularly those using the SPS technique and gamma correction, should be studied for all types of processor considered here, since they seem to offer advantages in power consumption.

e) Methods for implementing the comb-filter processor should be studied in the laboratory, and new techniques for accomplishing the all-pass phase shift required should be sought.

f) A more detailed study of the multi-look unfocussed processor should be conducted, and laboratory models constructed and tested.

g) The correlation processor should be re-examined for possible design improvements. The impact of using CCD devices in this processor, particularly for the corner-turning memory should be investigated.

h) The CCD-SAW processor of RRE should be studied in detail and adapted for SAR use on spacecraft. Laboratory tests are in order soon.

i) The FFT processor should be re-examined, particularly with regard to use of CCDs for the corner-turning memory, and possibly for full analog implementation.

j) The TI-JPL CCD range-sequential processor development should be continued, and emphasis should be placed on systems suitable for the water resources mission.

SECTION 2. RADAR CAPABILITIES

2.1 SUMMARY OF THE STATE OF THE ART

The use of radar in hydrologic measurements is in its infancy, although considerable research has been done on measurement of soil moisture and numerous measurements of standing but not flowing water have occurred in connection with other applications of radar. The measurement of lake ice has been demonstrated in a successful verification test by NASA Lewis Research Center, but little is known about radar measurement of snow.

Measurements with ground-based radar systems over a frequency range from 1.1 to 7.25 GHz have shown that radar's capability for determining soil moisture is confined to angles of incidence near vertical and is best in the frequency range between 4 and 5 GHz. Observations of soil moisture variation have been seen on radar imagery at frequencies as high as 35 GHz and as low as 1.2 GHz. Airborne measurements in the 4 to 5 GHz range have not yet been reported but the ground-based measurements were made under carefully controlled conditions and airborne measurements should yield similar results. The correlation between soil moisture and radar return is high as far as 7.25 GHz but the effect of vegetation is greater there than in the 4 to 5 GHz region.

Radar measurements of snow are essentially non-existent. The few indications that have been found in qualitative observations are that snow is best measured at relatively high frequencies and that, for some conditions at least, the returns are governed by the total soil moisture for relatively shallow snow depth. Because the radar measurement of snow is determined by the dielectric constant of the snow and the latter is strongly influenced by the amount of liquid water present in the snow, the problem of snow measurement may be difficult unless the environmental conditions are well known. This kind of experiment involving varying the environmental conditions should be undertaken as soon as possible.

The land-water boundary has been observed on radar images from the time they were first produced. In fact, land-water boundaries were exten-

sively used during World War II for navigation and bombing using PPI type imaging radars. Boundaries of water bodies have always been observed on side-looking radar images. They normally stand out clearly because of the large difference in the radar return between land (high) and water (low). However, the situation in marshes and wetland, where vegetation return is mixed with the return from the water, is more complex and is discussed in more detail later.

Radar measurements of rivers have not actually been made but numerous indications have been observed on side-looking radar images that not only can the river banks be distinguished, but if the gain settings are proper, full patterns can also be ascertained as they affect the surface of the water.

To our knowledge no measurements of river ice have been undertaken, but the ice in the Great Lakes and the ice in small lakes along the north coast of Alaska have been observed in some detail. The verification test conducted by NASA Lewis Research Center over the Great Lakes has demonstrated that useful maps of lake ice can be produced on a timely basis and are of significant value for navigation through the Great Lakes during the winter. Interesting inferences have been drawn about the ability to determine the amount of freezing that has taken place in the shallow lakes along the north slope of Alaska.

Watershed run-off calculations depend upon empirical "curve numbers". A preliminary attempt has been made by Blanchard at Texas A. and M. to use radar to establish these factors. The initial results are promising but the work is as yet incomplete and no further details will be reported here.

2.2 RADAR MEASUREMENT OF SOIL MOISTURE

Radar offers the potential for making timely measurements of soil moisture because the frequencies that are sensitive to the soil moisture are quite insensitive to clouds and even falling rain. The moisture content of the soil may only be monitored within the top few centimeters with radar, however, because the signals attenuate quickly as they enter the soil, particularly when it is wet.

Three radar system parameters: polarization, frequency, and incidence angle, affect the scattering of electromagnetic waves from a target. The primary factors relating to the surface itself are the complex dielectric constant (including both the dielectric and conduction effects) and surface roughness. Radar backscatter depends on both surface and sub-surface geometry. The energy incident upon the terrain surface is reflected or scattered depending upon the smoothness and homogeneity of the surface. For a perfectly smooth surface, the signal reflects at the reflection angle equal to the angle of incidence but away from the source. Perfectly smooth surfaces almost never occur in nature and, consequently, a diffuse scattering phenomenon usually occurs. This diffuse scattering is the cause of the signal returned to the radar at any angle of incidence other than perpendicular to the surface. With a relatively smooth surface, most of the energy goes in the direction of the specular reflection or near that direction, whereas with a very rough surface, the energy scatters more uniformly in all directions. Roughness to the radar depends upon the geometric scale measured in wavelengths rather than in some absolute unit. A smooth surface for which little backscatter occurs and specular reflection predominates has an RMS surface height fluctuation less than about an eighth of a wavelength. When the RMS height fluctuation exceeds about a wavelength the surface scatters nearly uniformly. Since the signal penetrates somewhat into the ground, inhomogeneities beneath the surface may act as volume scatterers whether they are pebbles, voids, or simply small regions where the compaction of the soil is different from that in the surrounding area. Thus, even a very smooth surface may give backscatter because of underlying inhomogeneities.

The other principal factor governing reradiation is the complex dielectric constant. Lundien (1966, 1971) examined in the laboratory the effect of soil moisture on radar return while MacDonald and Waite (1971), using an available 35 GHz radar, showed that differences in soil moisture content could be determined qualitatively at angles of incidence near the vertical, even in a forested terrain during the winter when the leaves were not on the trees. The most extensive series of measurements of radar backscatter from the earth has been conducted at The University

of Kansas starting in August of 1972. Measurements are reported here in detail.

Before considering the measurements themselves, the reader must consider the depth of penetration of the radar into the soil. The depth of penetration is usually described in terms of the "skin depth". This is the distance in which a normally incident wave will be reduced to an amplitude e^{-1} of its value just beneath the surface. The power is thus reduced to e^{-2} by the time it reaches a distance of 1 skin depth and a signal backscattered from this depth would be reduced by e^{-4}. Consequently, one cannot expect that a significant fraction of the return will come from within even one skin depth; rather most of the return from signals that penetrate the surface comes from a point closer to the surface than a skin depth. In the range of 4 to 7 GHz the skin depth observed for soil moisture profiles actually measured in the field was found to vary from around six centimeters for a very low moisture content of about five percent by weight (averaged over the top five centimeters of soil) to values of one cm or less for wet soils having a moisture content of the order of 30 percent. In general, observations over the range of radar frequencies from a little above 1 to about 8 GHz indicate that the moisture in the top 1 to 3 cm of the soil is the most significant in determining the radar return at practical angles of incidence. Thus, the radar can only determine the very-near-surface moisture content.

Since moisture content is required for many applications at greater depths, some other means must be found to extrapolate from the surface values to values at greater depth. If the soil type and the precipitation history of the region are known, this extrapolation can indeed be carried forth using known models. It may be possible to determine the precipitation history from repeated radar measurements, although calibrations using rain gauges at critical points would be helpful for this purpose.

The observations made at The University of Kansas using the ground-based system all depend upon a microwave active spectrometer which was initially operated over the range from 4 - 8 GHz and has since been extended to the range 1 - 8 GHz. The most extensive series of measurements were performed in the summer of 1974 at College Station, Texas over

the 2 - 8 GHz range and in the summer of 1975 at Lawrence, Kansas over the 1 - 8 GHz range. In both cases the measurements were made over bare fields whose surfaces had been prepared to represent different degrees of roughness; one field in the College Station experiment was, in fact, rolled smooth. The other fields at College Station and all five fields at Lawrence were prepared with different roughness by standard agricultural practices, using plows, discs, etc.

The spectrometer is a system whose antennas are elevated to a height of 22 meters. A frequency modulated signal is transmitted from one antenna and received at an adjacent antenna. The width of the modulation band is set at several hundred MHz to permit averaging of independent returns from different parts of the range cell set by the antenna beam. Near vertical only one independent sample is observed for each measurement, but at angles well away from the vertical large numbers of samples can be added independently using this technique. The experimental plan calls for considering the number of independent samples obtained from a single position and moving the location on the ground illuminated by the beam to numerous independent spots at the steeper angles so that enough samples may be averaged to reduce the variance caused by multi-path fading.

The 1974 experiments were reported by Batlivala and Ulaby (1975) and the 1975 experiments were reported by Batlivala and Ulaby (1976). Angular variation of the return at 4 frequencies is shown in Figure 2.1 for the different fields analyzed in the two cases. The figure also illustrates the parameters of the fields (roughness and moisture content). All of the fields in the figure are quite wet and the large variation due to difference in roughness is clearly evident, with the greatest variation occuring at 1.1 GHz and a still quite significant variation appearing at 2.75 GHz. The minimum variation for all frequencies occurs somewhere in the neighborhood of 10 degrees with the minimum extending further out in angle for 7.25 GHz than for the lower frequencies. Nevertheless, it can be seen that the variation with roughness is relatively small at 4.25 GHz over a range from about 7° to 15° or 20°. The sensitivity and the absolute level of the return vary more significantly over this angular range than does the spread between returns for different amounts of roughness.

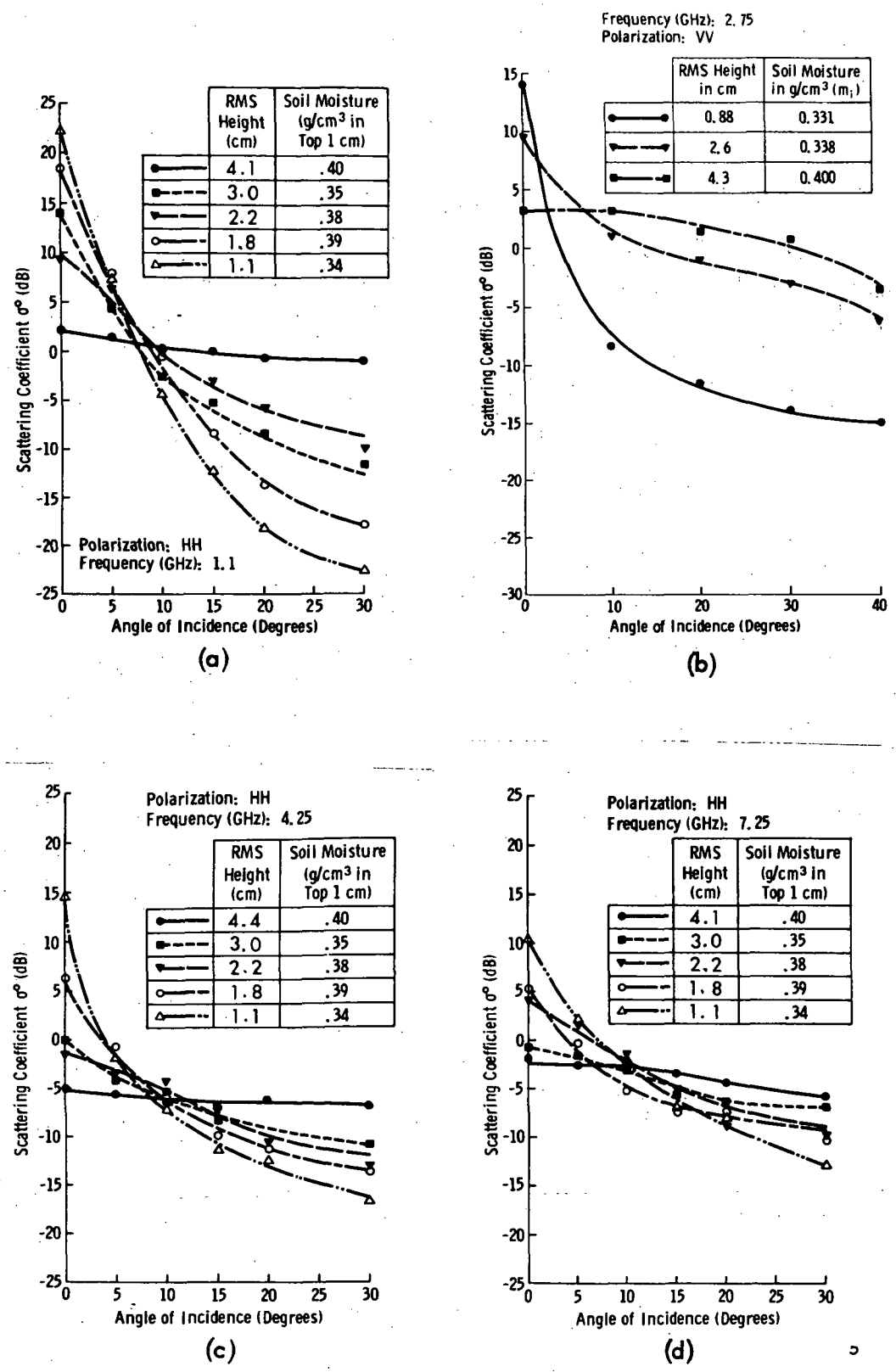

Figure 2.1. Angular Response of Scattering Coefficient. (a), (c), and (d) from Batlivala and Ulaby (1976) - 5 Fields with Different Roughness. (b) from Batlivala and Ulaby (1975) - 3 Fields with Different Roughness.

In Figure 2.2, the variation in response over the range of frequencies is indicated for the fields of different roughness at three angles of incidence: 0°, 10°, and 20°. The significant message presented by this figure is that the frequency range from a little abouve 4 to about 6 GHz indicates the least sensitivity to roughness at 10° and, if one excludes the very smooth field, this condition also prevails for 20°. If the very smooth field is included, one must go up to almost 7 GHz before the effect of roughness is small, but at this frequency vegetation is a significant factor. This frequency dependence is presented in a different way in Figure 2.3 where the total variation between very dry and very wet conditions is shown for the smoothest and the roughest field for the Lawrence experiment. The effect of roughness is clearly shown to be the least somewhere in the neighborhood of 4 GHz. This result indicates that neither a lower nor a higher frequency is as desirable as a frequency in this middle C-band region if the effect of roughness is not to be confused with the effect of soil moisture.

Another way to see this is illustrated in Figure 2.4 where the variation in scattering coefficient with roughness is shown for four different moisture contents at four frequencies and 10 degree incidence angle. Here the variation with roughness is shown to be least at the 4.75 GHz frequency. At 20°, the variation with roughness is least at 7.25 GHz although the sensitivity to moisture is also less there as shown in Figure 2.5.

One of the most important characteristics of the relation between soil moisture and scattering coefficient is the correlation between the measurements of the two quantities. Figure 2.6 shows the results of the 1974 test excluding the effect of the very smooth (unnaturally so) surface along with the optimum sensitivity and optimum frequency. This figure must be read with full understanding; that is, for each angle of incidence the correlation function corresponds with the optimum frequency and sensitivity shown for that angle. Since measurements in 1974 were taken only at 10° intervals the points at 5° and 15° were obtained by interpolation. For this case, the optimum correlation was high at about 10° and the optimum frequency corresponding with it was 3 GHz. When the smoother profiles are included, however, the optimum frequency at 10° is higher as shown in

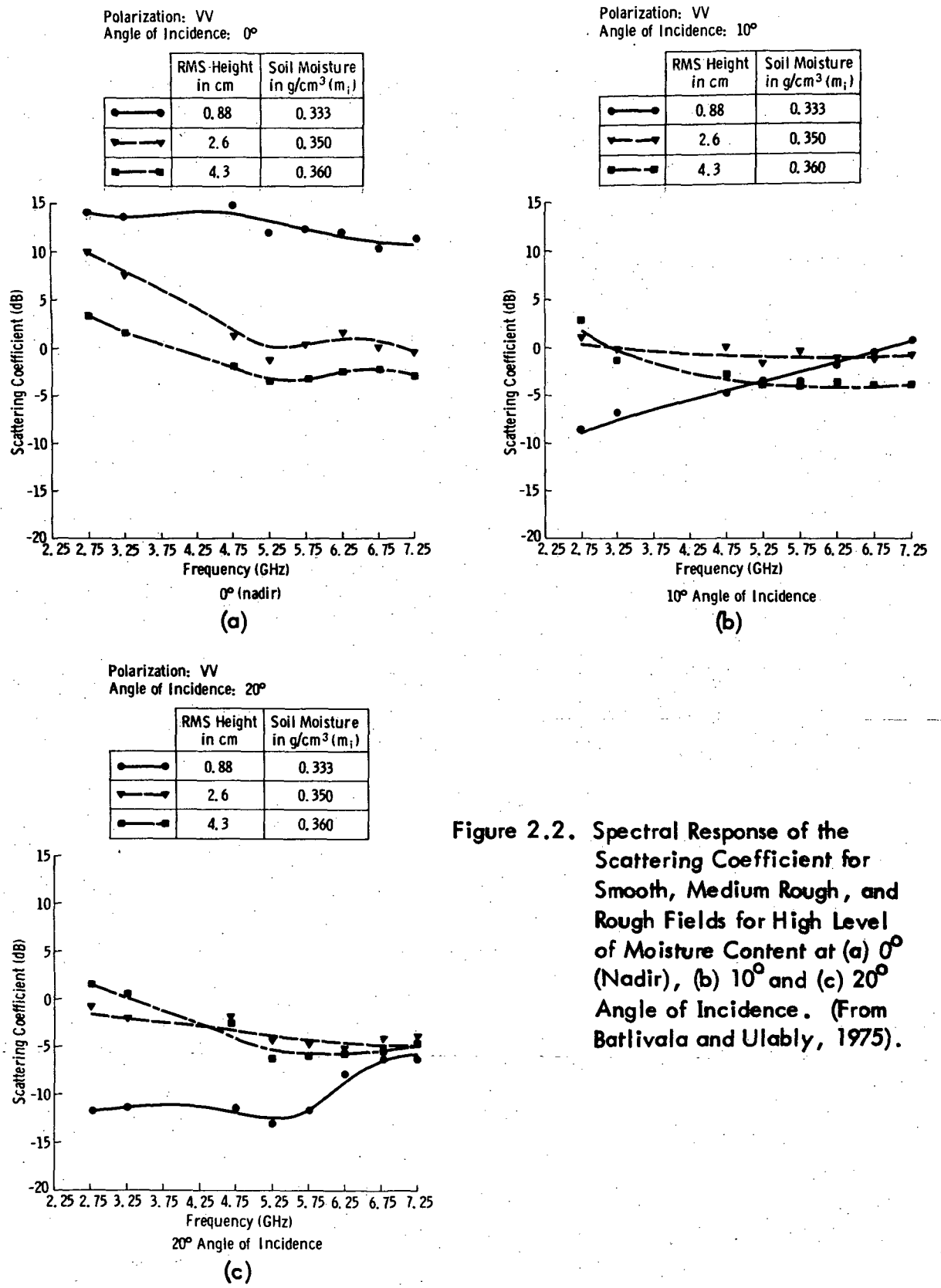

Figure 2.2. Spectral Response of the Scattering Coefficient for Smooth, Medium Rough, and Rough Fields for High Level of Moisture Content at (a) 0° (Nadir), (b) 10° and (c) 20° Angle of Incidence. (From Batlivala and Ulably, 1975).

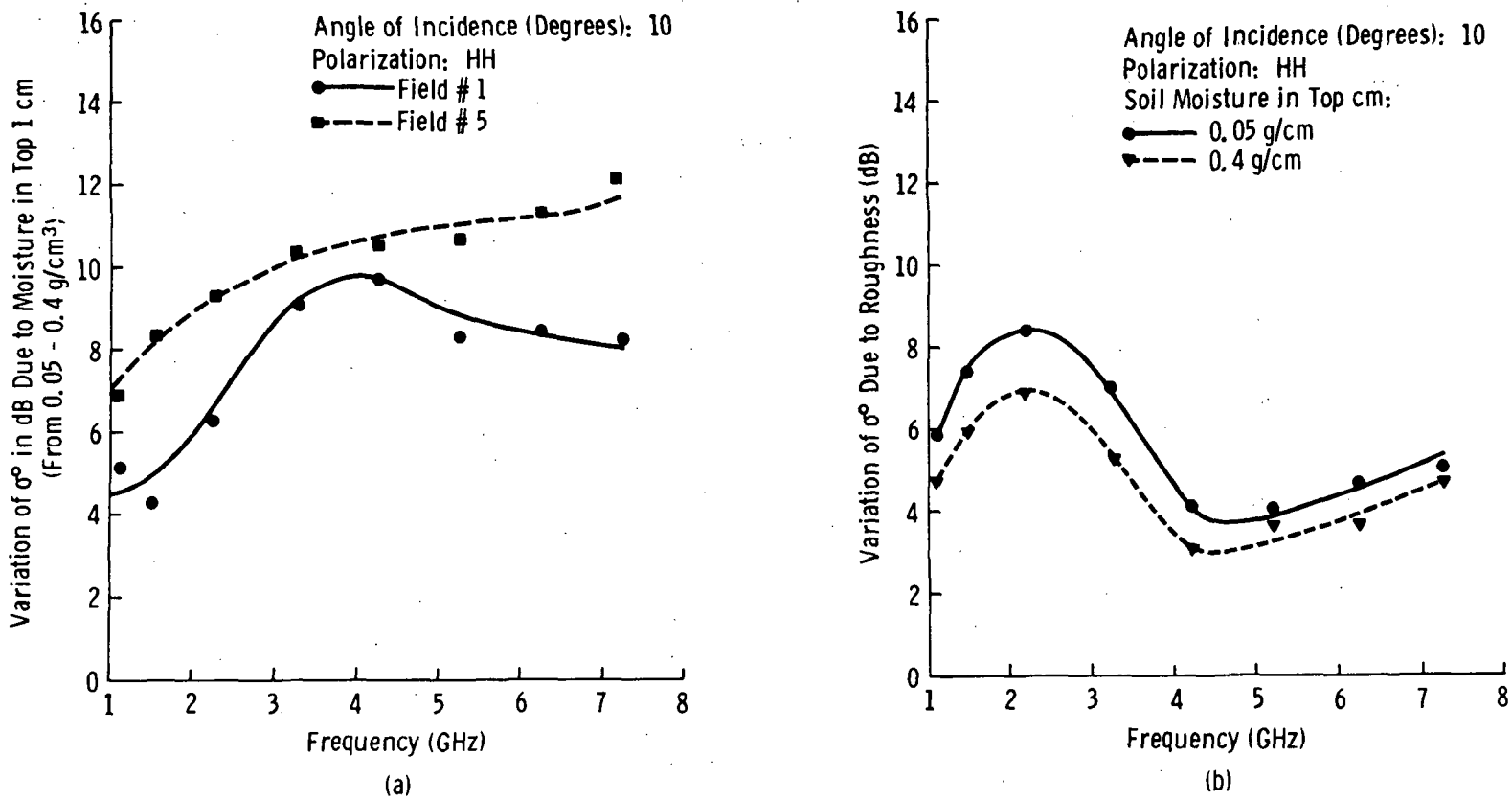

Figure 2.3. Variation of Scattering Coefficient (at an Angle of Incidence of 10° and HH Polarization) Due to (a) Soil Moisture and (b) Surface Roughness Plotted as a Function of Frequency. (From Batlivala and Ulaby).

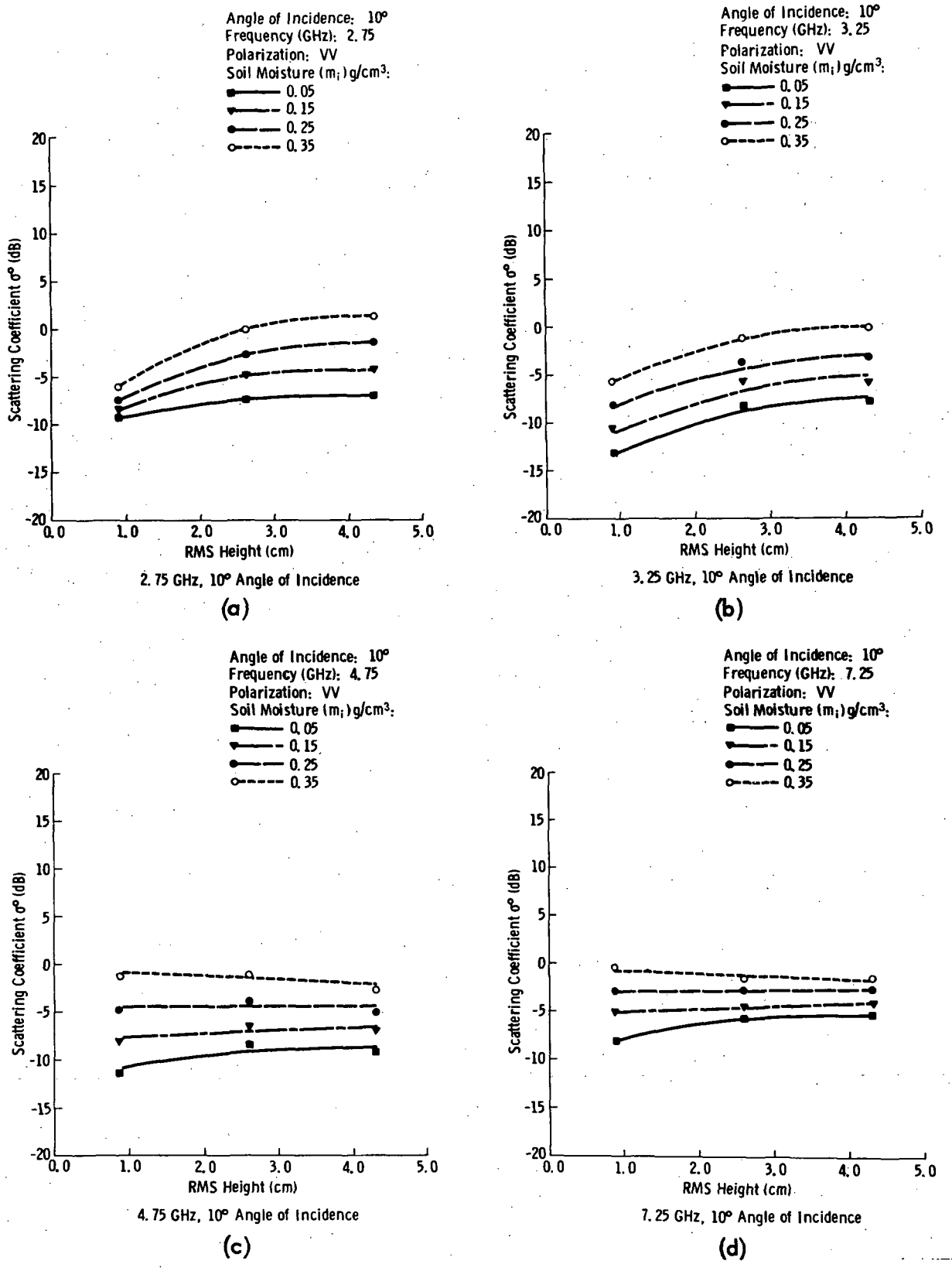

Figure 2.4. Scattering Coefficient as a Function of Surface Roughness at an Angle of Incidence of 10° for Four Moisture Conditions at (a) 2.75 GHz, (b) 3.25 GHz, (c) 4.75 GHz, and (d) 7.25 GHz. (From Batlivala and Ulaby, 1975).

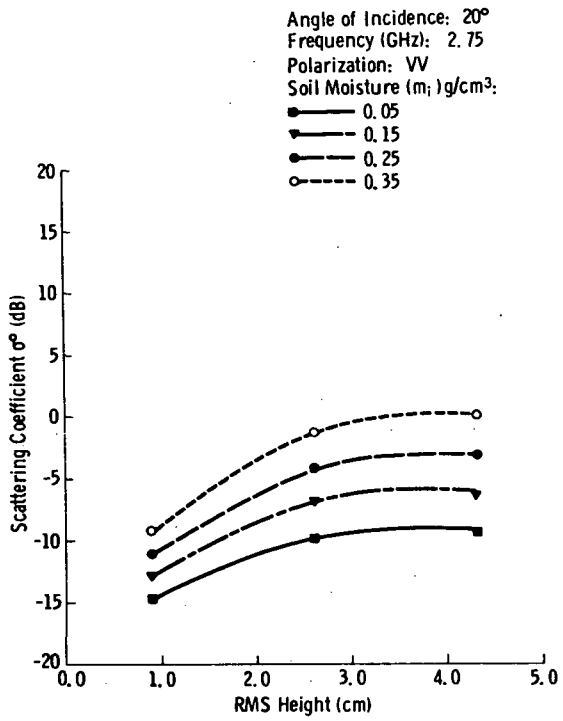

2.75 GHz, 20° Angle of Incidence

(a)

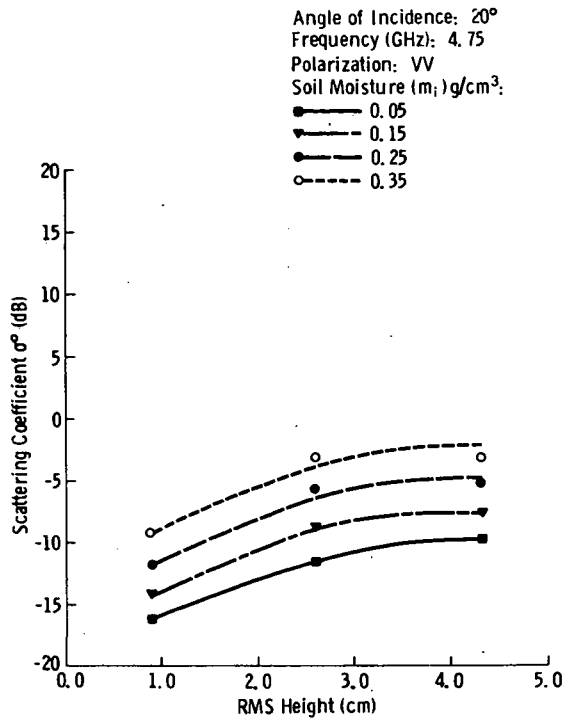

4.75 GHz, 20° Angle of Incidence

(b)

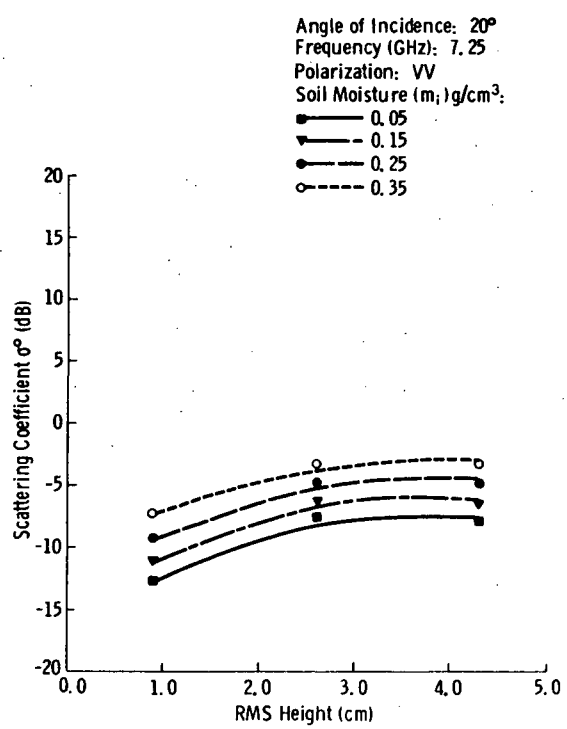

7.25 GHz, 20° Angle of Incidence

(c)

Figure 2.5. Scattering Coefficient as a Function of Surface Roughness at an Angle of Incidence of 20° for Four Moisture Conditions at (a) 2.75 GHz, (b) 4.75 GHz, and (c) 7.25 GHz. (From Batlivala and Ulaby, 1975).

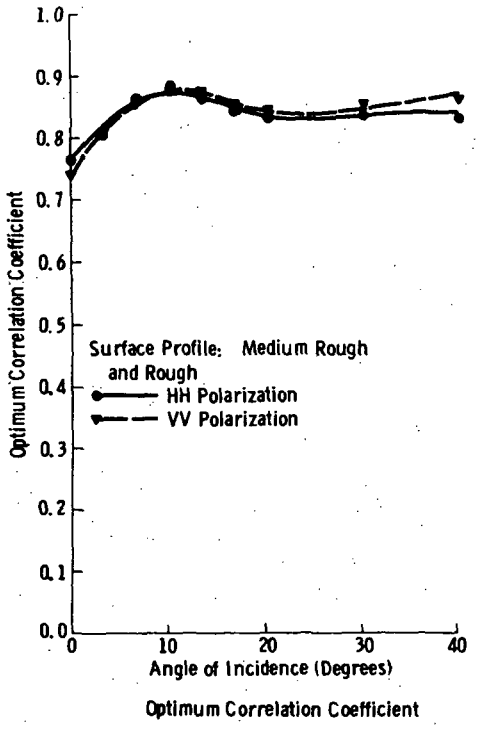

(a)

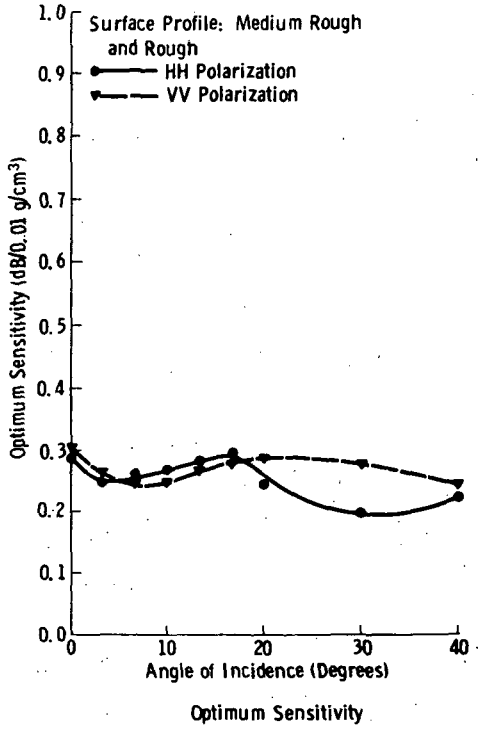

(b)

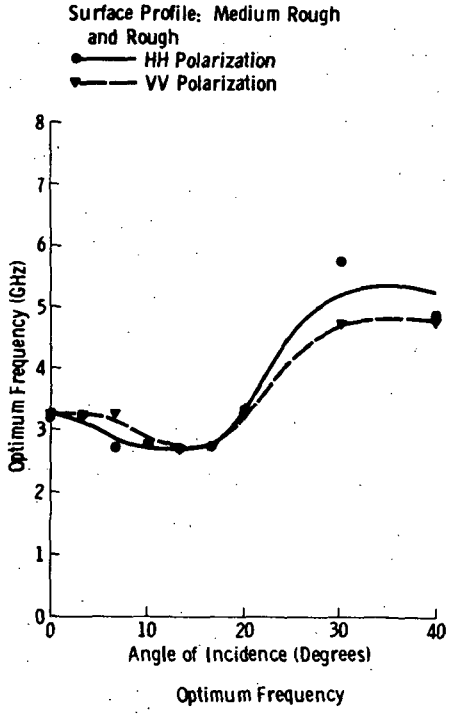

(c)

Figure 2.6. Optimum (a) Correlation Coefficient, (b) Sensitivity, and (c) Frequency Plotted as a Function of Angle of Incidence for the Medium Rough and Rough Surface Profiles Combined. (From Batlivala and Ulaby, 1975).

Figure 2.7 from the 1975 study. Where all five fields were included, the optimum frequency at 10° has increased to 4 GHz. Even at nadir, it is found to be as high as 3.2 GHz. The correlation coefficients corresponding to the optimum frequency are highest at 10° also but remain relatively high out to about 20°, where the optimum frequency has increased to 7 GHz. Sensitivity decreases with increasing incidence angle, but a high sensitivity at nadir is not of much use if it is so affected by roughness that the correlation is decreased. The difference in the correlation coefficient between L-band (1.1 GHz) and C-band (4.25 GHz is illustrated from the 1975 measurements in Figure 2.8. Although the correlation coefficient for all polarizations is reasonably high at all the angles indicated except nadir for 4.25 GHz, the correlation is only high at 10° for L-band. Figure 2.8d illustrates the comparable correlation coefficient for X-band (7.25 GHz), where the angular effect is less severe but the effect of vegetation would be greater.

Figure 2.9 from the more recent study defines the effect of angular sensitivity (the rapid change in scattering coefficient with angle of incidence, particularly at L-band) and moisture sensitivity on error. The error that one would make determining moisture by misinterpreting the return from a given sloping field as coming from a horizontal field is shown in Figure 2.9c for the two frequencies 1.1 GHz and 4.25 GHz for 10°. Although the sensitivity for one field is about the same at 10° for the two frequencies, it is different for the other field shown as an example. In both cases, the variation of scattering coefficient with angle is much greater at L-band than at C-band, with the result that a small error in the knowledge of the local slope gives a much larger error in effective soil moisture evaluation for L-band than it does for C-band. This is particularly large for field no. 5 when it was very wet. This happends because field no. 5 is smooth so the L-band scattering coefficient varies most rapidly with angle of incidence as was shown in Figure 2.1.

The effect of vegetation has been studied in connection with these measurements by Ulaby (1975). In this study,
the correlation coefficient between scattering coefficient and soil

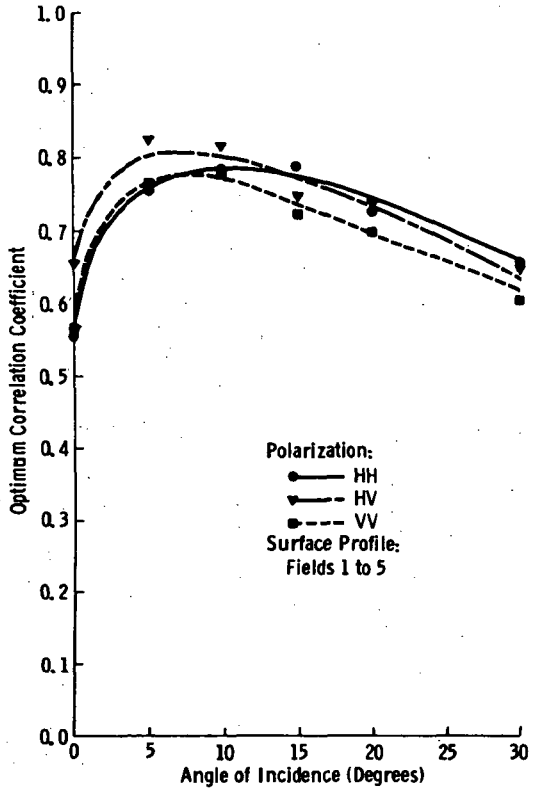

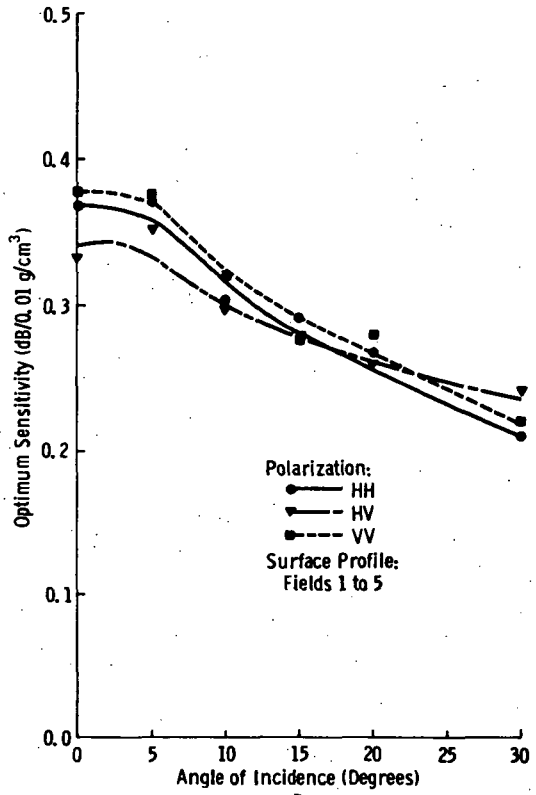

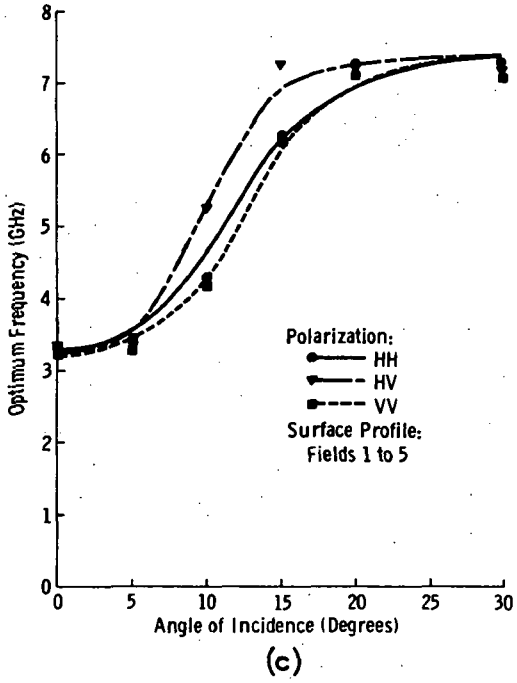

Figure 2.7. Optimum (a) Correlation Coefficient, (b) Sensitivity, and (c) Frequency, Plotted as a Function of Angle of Incidence for All Five Surface Roughnesses Combined. (From Batlivala and Ulaby).

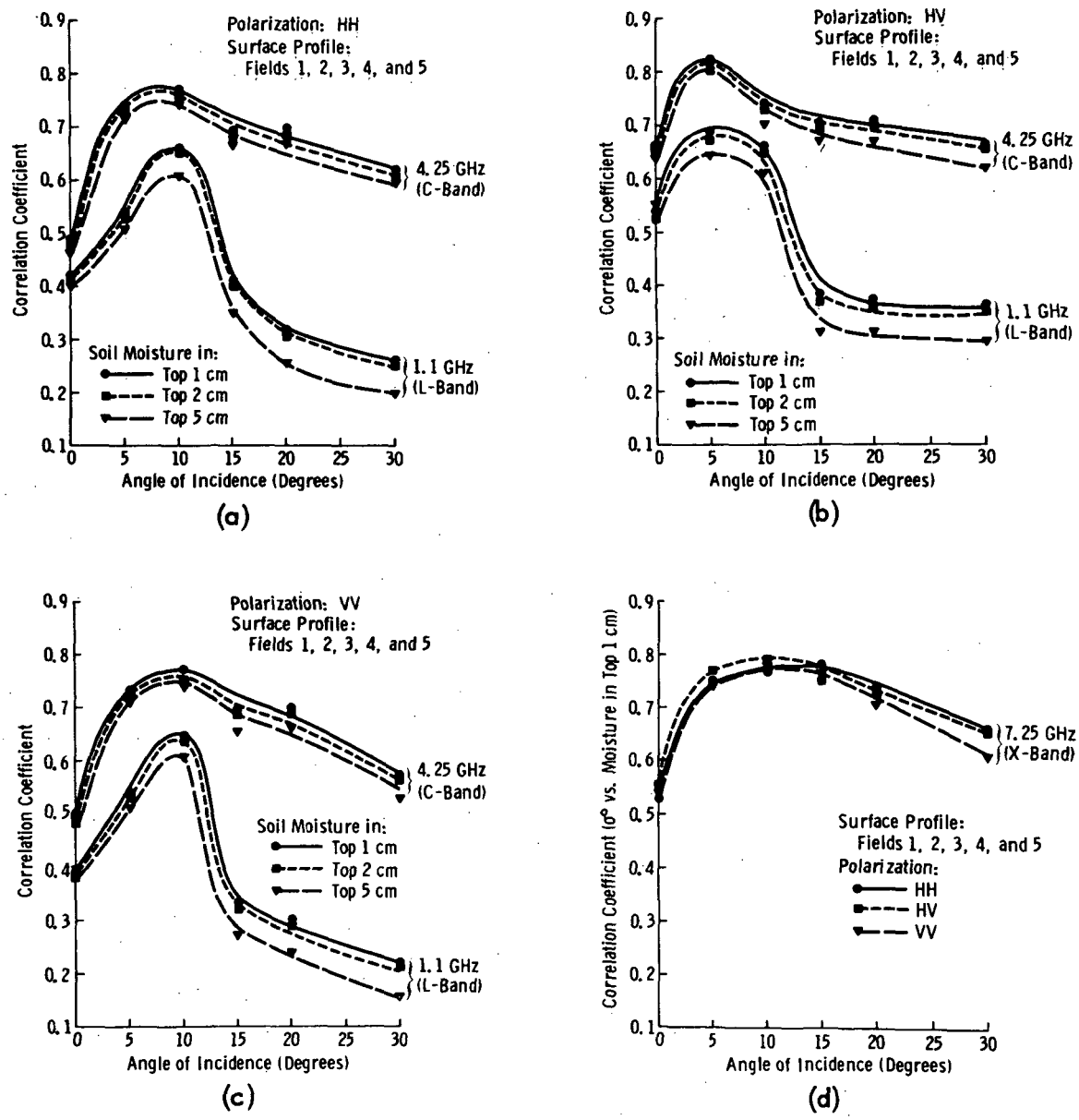

Figure 2.8. Correlation Coefficient Plotted as a Function of Angle of Incidence for (a) - (c), L-Band (1.1 GHz) and C-Band (4.25 GHz) for HH, HV, and VV Polarizations and (d) for X-Band (7.25 GHz). (From Batlivala and Ulaby).

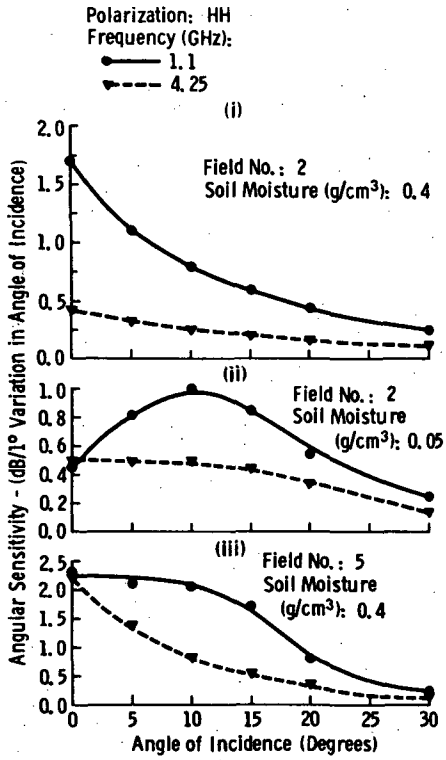

(a)

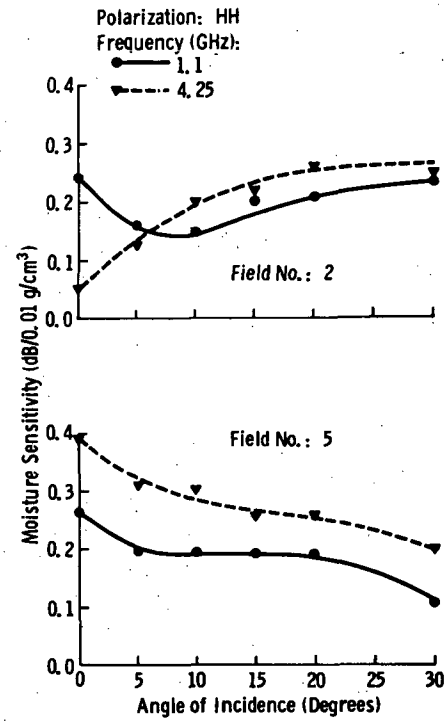

(b)

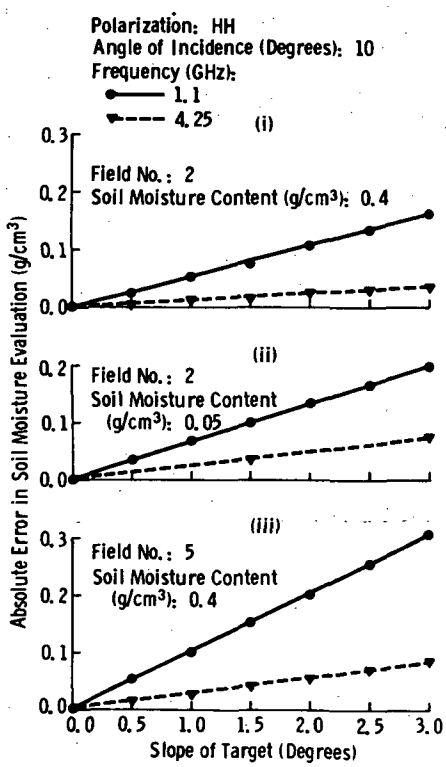

(c)

Figure 2.9. (a) Angular Sensitivity, (b) Moisture Sensitivity, and (c) Absolute Error in Moisture Evaluation Plotted as a Function of Angle of Incidence for L-Band (1.1 GHz) and C-Band (4.25 GHz); and (i) a Medium Rough Field, Soil Moisture = 0.4 g/cm , (ii) a Medium Rough Field, Soil Moisture = 0.05 g/cm³, and (iii) a Smooth Field, Soil Moisture = 0.4 g/cm³. (From Batlivala and Ulaby).

moisture content also turns out to be greatest at 10° incidence angle and 4.7 GHz even though the presence of the vegetation does reduce the sensitivity of scattering coefficient to soil moisture. The effect of this decrease in sensitivity caused by the vegetation must be accounted for by some knowledge of the vegetation itself. Measurements of vegetative cover may be made effectively at higher frequencies and higher incidence angles where the effect of moisture is less important, or in some cases negligible. A method must be devised, if this technique is to be used for soil moisture determination, to combine radar images or other information on the vegetation with the measurements at frequencies and angles that are optimum for soil moisture determination, so that an appropriate sensitivity may, in fact, be used. Another alternative way to accomplish this purpose is to calibrate the soil moisture measurement by point measurements within the image at selected sites where both the vegetative cover and soil moisture have been measured.

In conclusion, the results of the ground-based measurements indicate that the optimum parameters for soil moisture determination lie somewhere in the following regions:

frequency	4 - 5 GHz
angle of incidence	7° - 15°
polarization	immaterial

Although L-band has been prominently mentioned as a good range for soil moisture determination, the results of these studies clearly show that this is not the case. At L-band the combination of greater sensitivity to roughness and more rapid variation with incidence angle makes the soil moisture measurement much less reliable. Furthermore, other measurements made during the 1974 tests at College Station, Texas showed that at S-band frequencies the diurnal variation of return from the vegetation was as much as 10 dB. One would expect it to remain high at L-band. No diurnal variation was found at 7.25 GHz and in the optimum frequency range around 5 GHz, the diurnal variation was small enough so that correction for it would be relatively easy.

Further details of this study are contained in Appendix A, a reprint of Remote Sensing Laboratory Technical Memorandum 295-6, "Radar and Radio-

meter Measurement of Soil Moisture - State of the Art".

2.3 RADAR MEASUREMENT OF SNOW

The potential for measuring significant parameters of snow (depth, moisture content, liquid water content, etc.) with radar seems good on the basis of the physics, but little is know experimentally about which of these parameters may, indeed, be best represented by the radar signal. Since present methods for snow measurement involve isolated point observations by snow observers who reach the observing points by skis or tracked vehicles, or else involve telemetry from equally isolated instruments throughout the snow pack, a remote sensing method for determining the relevant parameters of snow would be extremely valuable. The value depends upon the fact that major parts of the run-off used for irrigation and hydro-electric power, and causing floods, originate in the snow packs, particularly in the mountains.

Measurements with satellite instruments have been conducted in the past in the visible and infrared region. The Landsat images have resolutions that are reasonably satisfactory but can only tell those parts of the ground that are white and can give no information about the depth or water content of the snow. The infrared instruments give a little more of such information, but the satellite infrared instruments used to date have such poor resolution that they are not valuable in the mountains where spatial variability of the snow pack is great.

Although various observations have been made of radar return from snow in the past, no consistent program has yet been conducted to determine the overall effect. Cosgriff and others at Ohio State University (1960) observed some snow-covered surfaces and noted that the snow tended to obscure the return from the underlying terrain at X-band and K-band. There appears to be a linear relationship between water content and the scattering coefficient in their data, although they did not attempt to exploit it (Moore, 1972).

Waite and MacDonald (1970) observed high returns from mountain top snow in the summer using the 35 GHz Westinghouse AN/APQ-97 real-aperture

side-looking radar. The returns seemed to be relatively independent of angle of incidence, and they postulated that this meant a volume scatter phenomenon was taking place.

During the 1974 - 1975 winter, and again during the 1975 -1976 winter, measurements were made at The University of Kansas in the hope of determining more about the radar response of snow. These measurements used the microwave active spectrometer (1 - 8 GHz). Unfortunately, although the equipment became ready in the 1975 - 1976 winter at about the time snow can normally be expected in Kansas, no snow fell during the months after December so no observations were made that year. The observations made in 1975, however, have been analyzed and provide us with the first information on the effect of frequency and angle of incidence on snow return. Unfortunately, these measurements were all made with quite wet snow. The temperature of the surface of the snow was always in the vicinity of the melting point, although the air temperature during some of the measurements was as low as 15° F.

Some results from these measurements are shown in this report. Figure 2.10 illustrates a comparison between 10.8 cm of wet snow and the snow-free condition in the same location on a different day. The frequencies 1.2 GHz and 7.25 GHz are shown. Clearly, at all angles of incidence away from the vertical, there is a significant difference between the return from the snow and that from the snow-free ground at both frequencies. It is interesting to note that these signals were weaker for the snow cover than the snow-free ground, just the opposite of the observation from the 35 GHz imagery reported by Waite and MacDonald. Whether this is an effect of the snow conditions or of the frequency is unknown at the present time.

Figure 2.11 shows another example of snow-covered terrain, this time with 15 cm of wet snow, and with four different frequencies shown. At the lower frequencies, the snow appears to cause a greater leveling out of the return than at the higher frequencies. Nevertheless, the returns drop off very rapidly away from vertical even though they level out somewhat at larger angles. The returns are, at all frequencies, quite weak compared to returns from similar ground in the summer.

Figure 2.12 shows a similar set of observations when the snow was

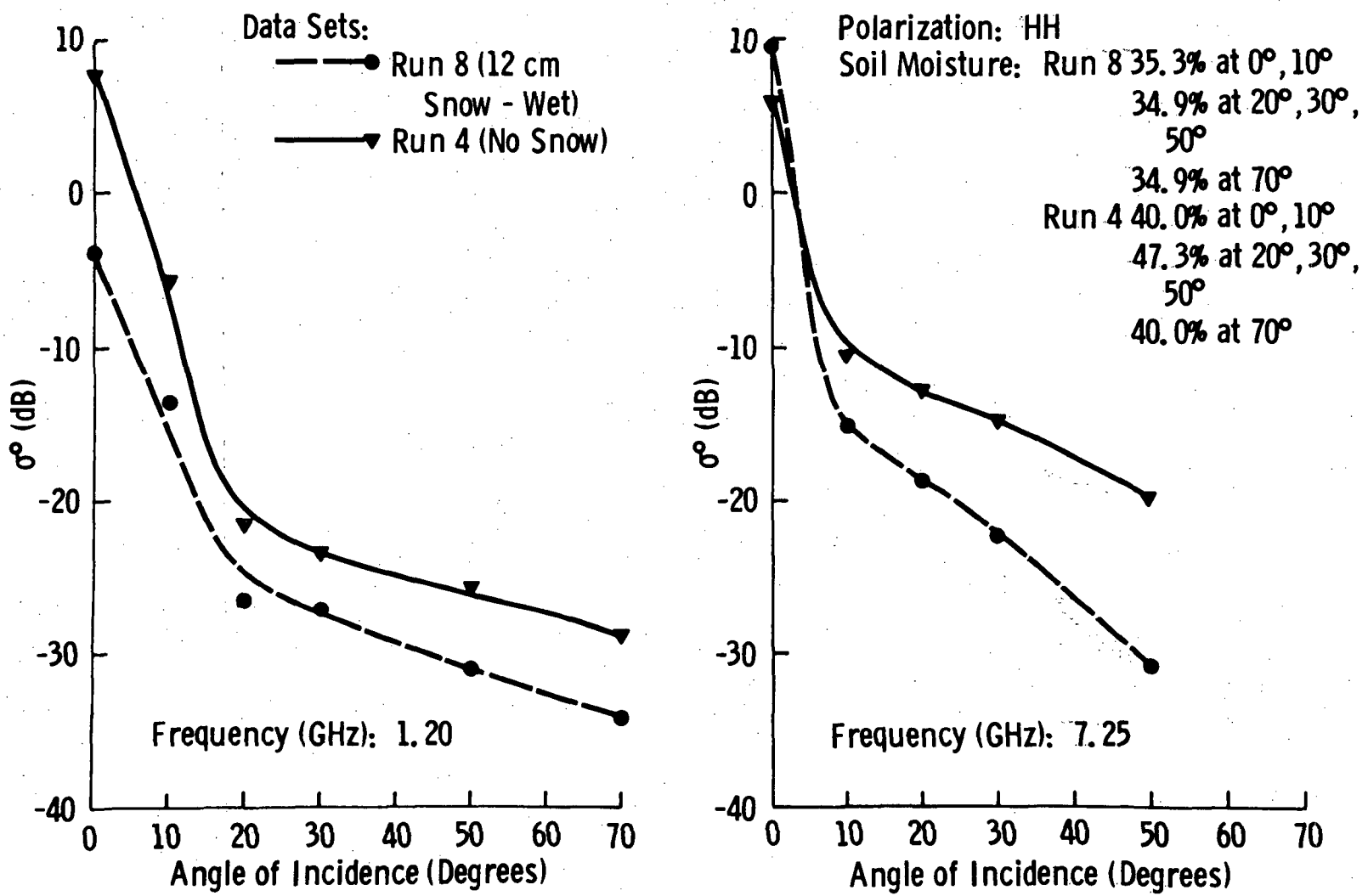

Figure 2.10. Angular Response of σ^{o} of Short Grass and Short Grass with a 12 cm Wet Snow Cover. (From Stiles, Ulaby, Hanson, and Dellwig, 1976).

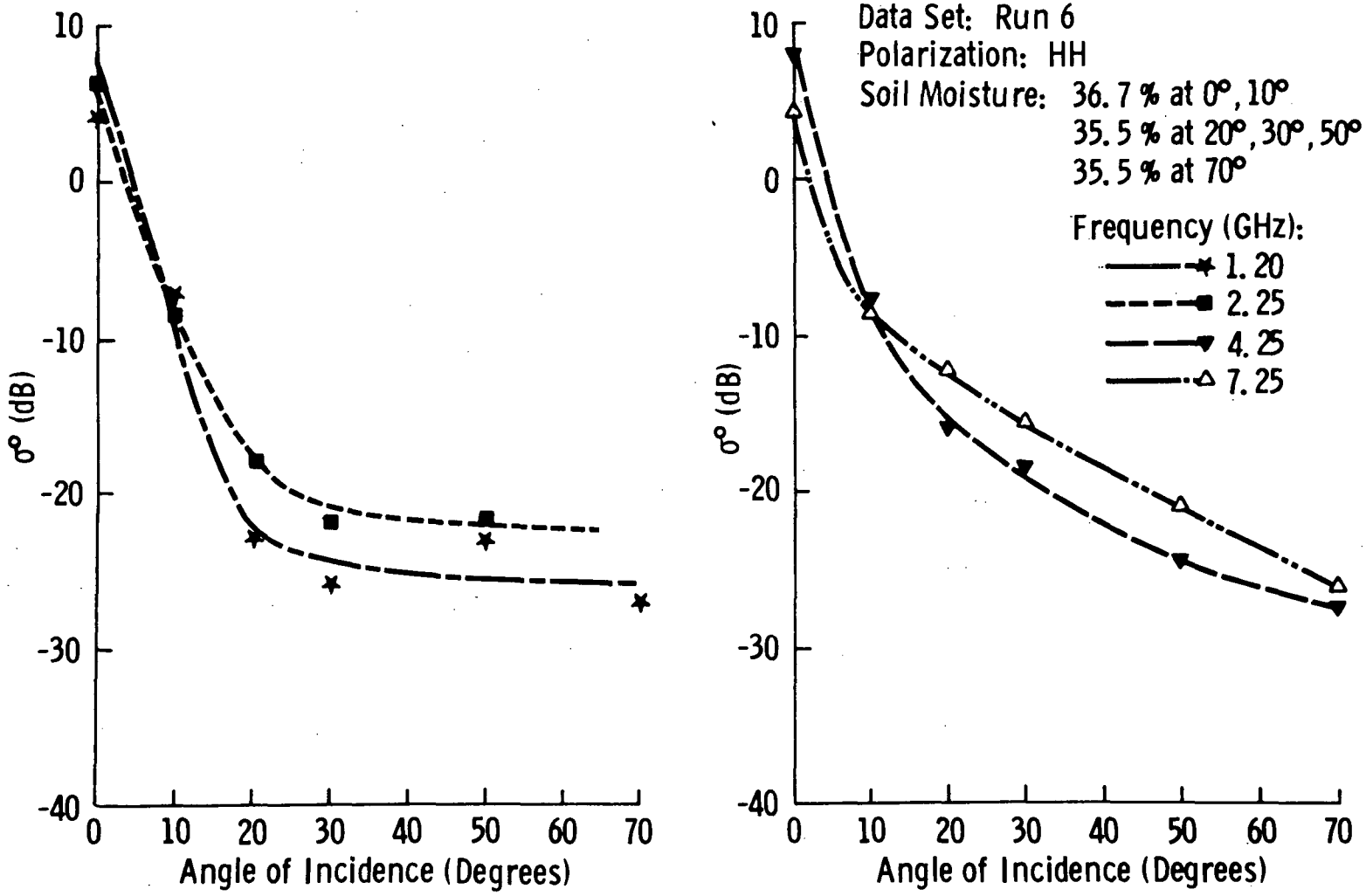

Figure 2.11. Angular Response of σ^{o} of Short Grass with 15 cm Dry Powder Snow Cover. (From Stiles, Ulaby, Hanson, and Dellwig, 1976).

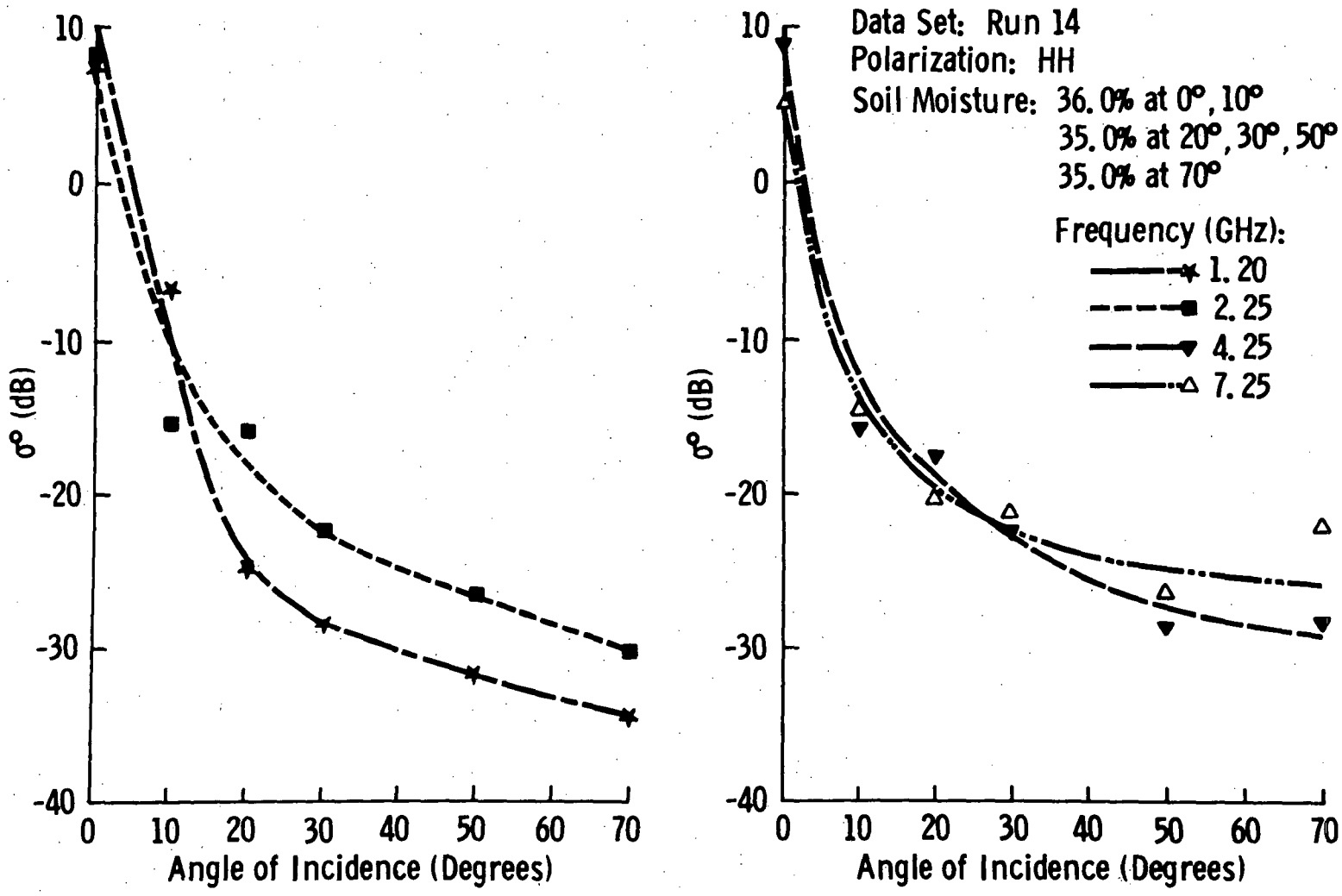

Figure 2.12. Angular Response of σ^{o} of Short Grass with 0.5 cm Ice Over 6.5 cm Snow Cover. (From Stiles, Ulaby, Hanson, and Dellwig, 1976).

not so deep but the cover included atop the snow 1 cm of ice, caused by a light freezing rain. The results are somewhat similar to those for the snow itself, but the lower frequency signals do not level out as much.

Attempts were made to correlate the observations with snow depth but the correlation was not very successful. The correlation did turn out to be quite good and the sensitivity of the measurement reasonably good at a higher frequency when the radar return was correlated with the total moisture content of the snow (in gm/cm^2 of surface area). The results are shown in Figure 2.13 for three frequencies. The correlation coefficient is shown at the top, and at the bottom the sensitivity in dB per tenth gm/cm^2. The correlation coefficients for both 2.25 and 6.25 GHz appear to be quite good at angles of incidence beyond about 30° with negative values of 0.8 or larger. The negative correlation between radar response and snow moisture content was unexpected since we had postulated that the volume scattering phenomenon observed by Waite and MacDonald would be present here also; if this had been the case, the correlation would have been positive instead of negative. As before, there seems to be little to indicate whether this negative correlation at the lower frequencies and the positive correlation inferred by Waite and MacDonale at 35 GHz is due to the vast difference in the monitoring of old snow on mountain tops and relatively fresh, wet snow in Kansas or to the factor of 10 in frequency. The implication is that different frequencies may give quite different responses but if the difference is due to the type of snow, the problem will be more complicated.

Another set of measurements was made during the spring of 1976 by Linlor of NASA Ames Research Center and Clapp at The University of California (Linlor, 1976; private communication). Figure 2.14 illustrates an interesting trend observed by Linlor and Clapp. As they monitored at fixed angle, polarization, and frequency throughout the day, the return was relatively strong at 39° incidence angle in the early morning hours but showed a very steep drop of more than 10 dB between 10:45 AM and noon. The return remained low throughout the afternoon but began to recover toward its higher value at about 4:00 PM and was quite high again at 5:00 PM. Presumably, this effect has to do with a melting of

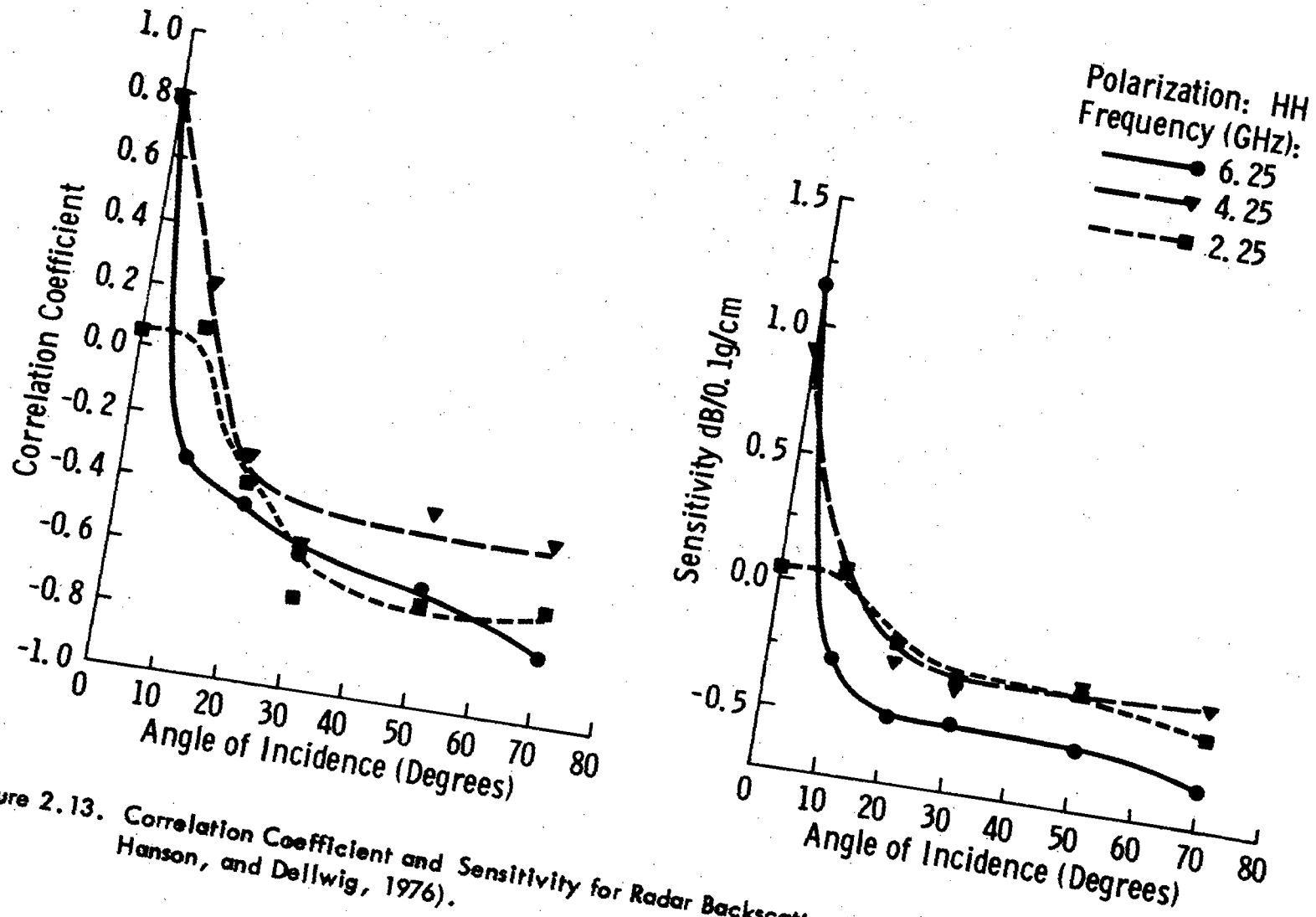

Figure 2.13. Correlation Coefficient and Sensitivity for Radar Backscatter from Wet Snow. (From Stiles, Ulaby, Hanson, and Dellwig, 1976).

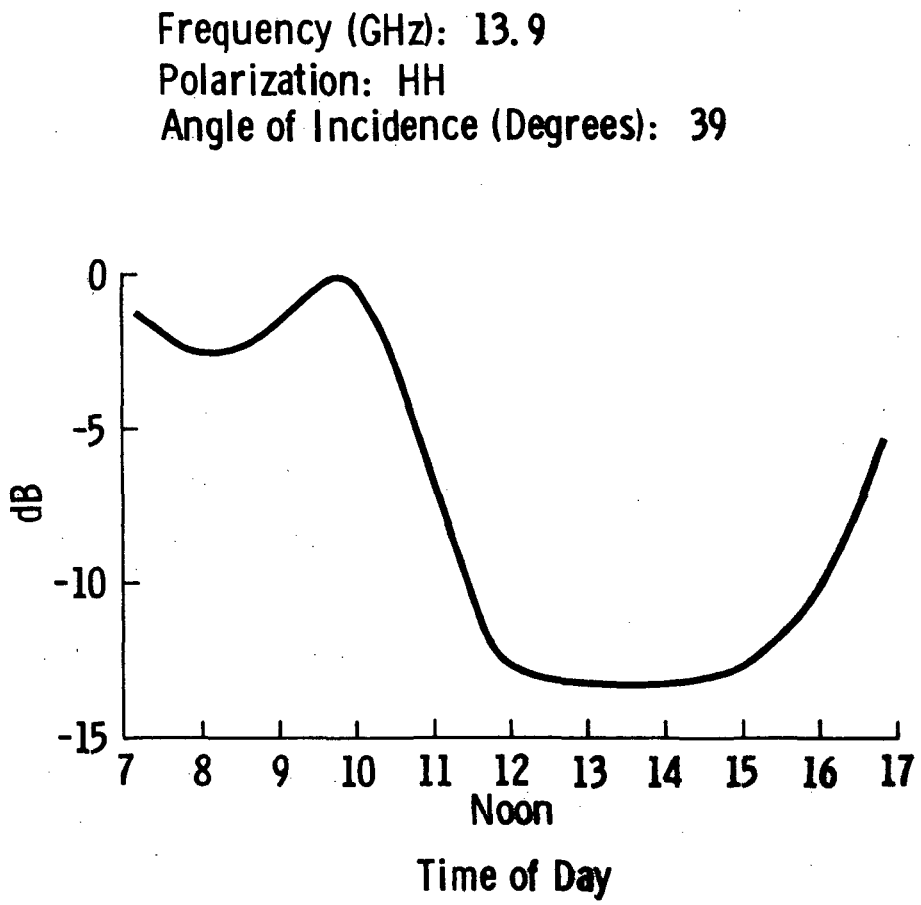

Figure 2.14. Diurnal Changes in Snow Scatter at Sierra Snow Laboratory, March 7, 8, and 9, 1976 -- General Trends (Data from Linlor and Clapp, 1976).

the surface layer. We do not have the information on the snow moisture content, although it was measured. However, one can postulate that the surface melting caused the upper layer to become more like a specular reflector in which case the signal would primarily reradiate in the forward direction with little backscatter. Presumably, during the colder times of the day the upper layer was frozen and the signal penetrated far enough so that volume scatter was responsible for the strong return. At this stage, however, such an interpretation must be considered pure conjecture. The most significant consequence of this observation is that it points to the dangers of assuming that snow measurements can be made at any time of day or night without making adequate corrections for the effect of surface melting.

A snow experiment was scheduled for the 13.9 GHz scatterometer on Skylab. Regrettably, only two passes across snow covered terrain were useable and these were at angles with 15° of vertical. The results seem to indicate a positive correlation between the scattering coefficient and the snow moisture content. However, with only two passes across separate large areas of the country one cannot be sure whether the apparent correlation is real or whether it may, indeed, be associated with some ground factor other than the snow cover.

The general conclusion that one reaches from observation of the few measurements of snow backscatter is that there is, indeed, significant variability in the backscatter from snow and that, under the particular conditions of the experiments, this backscatter appears to correlate with moisture content of the snow. The experiments are so fragmentary and under such different conditions that one cannot be sure what the actual trend is, but they do offer hope for the future. The Linlor and Clapp experiment, however, also points out some of the apparent difficulties associated with measurement at times of day when the snow may be melting. Perhaps a satellite mission for snow-cover monitoring should always fly at night; that is, one should always use the night time pass covering a particular area and not the day time pass. However, the differences between night and day may also turn out to be valuable.

The most significant consequence of these observations is the need for more research on radar return from snow. An extensive program should

be undertaken covering a wide range of frequencies in a location where the snow remains on the ground for long periods. Observations should be made with different polarizations and angles of incidence and throughout the day and night as well as throughout the season. Particularly important will be observations on the sunny and shady slopes, for both the morphology of the snow and the radar return itself are affected by the melting on the sunny slopes. A possibility exists that the response on the sunny slopes will turn out to be quite different from that on the shady slopes and that the two will have to be segregated in any analysis of spacecraft data. This can only be conjectured at the present time, however, since definitive data are lacking on such matters.

2.4 RADAR MEASUREMENT OF STANDING/FLOWING WATER

Measurements of standing water are of importance in several different applications; perhaps the most obvious is monitoring of floods. Monitoring the excess water standing on poorly drained areas can give an indication both of the amount of drainage and of the amount of rainfall within the period preceding the measurement. Surveys of the total area of surface water over wide regions are of both scieitnfic and practical use since the amount of water subject to evaporation affects the climate, the amount of water impounded in flood control structures too small to be listed in the usual surveys of such structures is important in forecasting floods, and water storage in such small impoundments is important in many phases of water resources management. Furthermore, the monitoring of marshland and coastal wetlands is of importance both in terms of the environmental results of changes in their water content and in terms of management of the water resources and coastal areas.

Radar offers a particularly useful tool for monitoring surface water because a radar image can be obtained at any time of day or night regardless of the presence of clouds or daylight and these water features change often enough so that one cannot afford to wait for a clear day to perform inventories. Of course, this is particularly important for flood monitoring and observing the effects of recent rainfall.

Observations of land-water boundaries were used as far back as World War II for navigating aircraft to potential bomb targets and, in fact, for aligning the bomb sites for night time operations. Also during World War II, the use of land-water boundary discrimination was widely applied to navigation of ships, and today most ships of any size and even most major river vessels carry radars for just this purpose.

Radar has been suggested as a useful tool for the detection and mapping of inland water bodies as far back as 1967 (McCoy, 1967) due to the characteristic appearance of the water bodies on side-looking radar imagery. Roswell (1969) concluded that lakes larger than 8 acres in area could be detected in well-drained lowland areas on 35 GHz AN/APQ-97 imagery and obtained similar but varying results with different radar systems. Simpson (1969) also obtained similar results using the AN/APQ-97 for an area in New England.

X-band radar has been used for flood monitoring and damage assessment on a very limited basis. Rydstrom (1970) presented several techniques for identifying flooded areas. He noted the strong contrast in returns between flooded and non-flooded fields and that breaks in levees were identifiable due to a disruption in the high return generated from the levee. Dams and associated spillways displayed high returns during normal pool but during times of high water, when the spillway was active, no return was observed from the spillway structure itself.

The high contrast between land and water exists because water is a smooth surface compared to the land. Consequently, at angles of incidence away from nadir the water surface returns very little energy compared with that returned from almost any land surface. Radar return from water depends upon the roughness, just as it does for the land, but water surfaces are usually smoother at the wavelength scales involved than land surfaces. The primary mechanism for off-nadir microwave return from water is scatter from wave structures whose wavelengths are a resonant distance apart. That is, contributions from successive waves with these lengths add up, in phase, at the radar when a difference in distance from the radar to the first wave and the radar to the second wave is one or more integer multiples of the wavelength. At radar frequencies in excess of about

3 GHz the waves of this size are strongly wind dependent and, in fact, the wind dependence has been used to establish a method for ocean surface anemometry (Young and Moore, 1976). At angles of incidence of 30° or more, the radar return from the wind driven water surface is small compared with that from almost any land surface unless the winds reach gale force. Consequently, the boundary between water and land is nearly always clearly shown on the radar image. Examples of this are shown in the illustrations of Appendix C. Note for instance, Figure 6 of that Appendix where four different areas are shown. In every case, the land-water boundary is quite clear for the major lakes, the Gulf of Mexico, and the minor lakes. However, note that in the very near range, where the angle of incidence is steep, the radar return from the water is sufficiently high that it might be confused with radar return from land so that a radar for measuring surface water could look out well beyond 20° from nadir, exactly the opposite angle of incidence range from that most suitable for soil moisture determination.

In situations where a mud flat exists, the un-inundated land area may be quite smooth, and the distinction between land and water may not be clear. This situation has not been studied in detail, but mud flats off the coast of Panama were observed to show up reasonably well in distinction to returns from the ocean when observed with the 35 GHz AN/APQ-97 real-aperture side-looking radar (Hanson and Dellwig, 1973). This is a subject, however, where additional research is needed. Probably the best type of research that could be conducted here would be with the ground-based system operating under controlled conditions.

Most of the observations have been made at frequencies of 9 GHz or higher so that the question of an optimum frequency for detecting open water and distinguishing it from land has not really been solved. It appears that any of the high microwave frequencies used in these studies should be adequate for detecting and mapping free-standing water (lake, reservoir, pond, etc.) and for detecting and mapping rivers, at least within the system's resolution capability. Decreasing the frequency usually causes surfaces to appear smoother and thereby decreases the amount of energy backscattered by the target. This is true both for the water and the land, but the relative degree to which this decrease

effects the contrast has not yet been fully determined. Unfortunately, comparative imagery at the lower frequencies has not been obtained by any significant degree.

One study was undertaken to determine the feasibility of utilizing multiplex synthetic-aperture X- and L-band radar over varying terrains including those containing standing water (Drake et al., 1974). Their analysis indicated that X-band imagery permits identification of small non-linear and narrow linear open water features. L-band imagery exhibited a more subdued response to these features which often rendered the identification impossible. Analysis of shorelines indicated that radar at X-band and shorter wavelengths was superior to L-band imagery in every respect. Shoreline delineation is ambiguous when the peripheral vegetation is low and of even height when imaged on the L-band system, but shorelines are easily located on X-band imagery. Pads of water lilies are faintly indicated on both X-and L-band imagery as well as hyacinth and, to some degree, reeds. Differentiation is only possible by utilizing both like- and cross-polarization.

The boundary between swamp or marsh and open water presents a different problem. Roswell (1969) observed that the boundary is often diffuse. He noted that the gradation of gray tones between open water, water and vegetation mixed, and non-water surfaces creates difficulties in establishing definite boundaries. Diffuse boundaries are not always the case as seen in Figure 8 of Appendix C. An area exhibiting high return (Figure 8a, X) peripheral to the river is thought to be non-wooded but vegetated marshland with interspersed sand deposits. The area of slightly lower return (Figure 8a, Y) is considered to be a non-wooded marsh which may or may not be submerged, but certainly posseses a high soil moisture content. One further area (Figure 8a, Z) also falls in the marsh category but exhibits a more subdued radar return than the two previously described categories. The measurements were all made at angles of incidence well away from the vertical and the effect of incidence angle is not known.

Observations by Drake et al. (1974) indicate that strong returns from marsh areas on X-band imagery are often reflections from the top of the vegetation. At L-band frequencies, penetration apparently occurs; marsh

reeds up to five feet above the surface of the water are penetrated resulting in specular reflection. One further observation was noted: marsh areas were often confused with certain types of range land and agricultural land on both L-band and X-band imagery but especially the latter. It must be noted, however, that the observations by Drake were performed on test sites located in Brevard County, Florida; vegetation differs dramatically with respect to its physical size, shape and other characteristics depending upon region. Hence, vegetation characteristics for a marshland in Florida will not be the same as that characteristic of marshes in other parts of the country.

Like- and cross-polarized 35 GHz returns observed in the Texas coast land indicated that the combination of the two could be used to distinguish between vegetated surfaces in standing water and vegetation-free surfaces. The cross-polarized return was weak for both surfaces but the like-polarized return was quite strong where vegetation was present.

Angle of incidence can be a significant factor in the discrimination of land-water boundaries for small rivers and other areas where dense vegetation occurs up to the water's edge. At low grazing angles (well away from nadir) the higher frequencies will be attenuated by the vegetation with the result that the vegetation shadow obscures part of the boundary. In the case of jungle rivers, which may not be wide compared to the height of the trees alongside, this could be a severe problem. Of course, the penetration is greater at lower frequencies but even there the problem still exists if the vegetation is dense enough. By using an angle of incidence relatively close to nadir, the amount of shadowing by the vegetation is reduced. The return from the water is stronger near nadir, calm water such as would be found in a well-protected river with high vegetation on the boundary should be clearly distinguishable from the vegetation itself. Thus, the choice of the angle of incidence, as well as (perhaps) the frequency, for mapping of standing and flowing water depends upon the environment where the water is likely to be found. In jungle or near-jungle areas, one would expect to use a low frequency and a steep angle. In the plains, this would not be necessary, and in fact, might be a cause for trouble because the ever-present flat land winds could cause the radar return near nadir from the water to be high

enough to obscure the boundary. Hence, in the plains one should probably use a higher frequency and an angle at least 30° away from nadir.

Most of the observations reported in the past have dealt with standing water. Rivers have been observed, but no specific attempt has been made to distinguish the boundaries of the rivers or the features within them. apids have been observed to give stronger returns in some cases, as would be expected because of the rougher water. Flow patterns should be observable because of differences in the water surface roughness associated with underlying features on the river bed. Such features have, indeed, been observed even in the ocean by De Loor (1970, private communication) where a dune structure on the bottom of the North Sea was observed to create differences in the radar return from the surface in an area where the sea was relatively shallow. To our knowledge, no attempt has been made to utilize this in studying rivers.

One problem in the study of rivers in the past has been that they always appear black on the image. This occurs because the gain settings used in the radars are normally optimized for the stronger returns from the land so that anything as weak as the return from water appears black. If one were to deliberately set out to measure the patterns in rivers, he would have to set the gain for the radar much higher, so that on most systems the land targets would tend to saturate. With systems recording the original data for subsequent processing, this merely means a separate set of processing for the rivers. With systems making only a photographic record, however, the choice must be made before the mission as to whether the gain is to be set suitably to determine the properties of the river and allow the land to saturate or whether it is to be set to determine the properties of the land and allow the river to appear all black.

In conclusion, although the use of radar for delineating standing and flowing water has received little explicit attention in the past, it has in fact been widely used and the technique is well known. Where the water is uncluttered by vegetation, the distinctions are exceedingly clear as long as the angles of incidence are far enough away from nadir. In marshy areas where vegetation exists in the water, more research is needed to determine whether the boundaries can be clearly distinguished with the aid of any particular frequency and with the aid of both like- and cross-

polarization. In areas where over-hanging vegetation exists the use of a low frequency and a small angle of incidence is called for. Detecting flow patterns in rivers appears possible but experiments must be conducted since most radars have in the past produced images in which the gain was set so that all water appeared black.

The question of the required resolution for determining the amount of water in small impoundments has not been resolved. An experiment to study this should be conducted in the near future and can be accomplished quite readily using available imagery, or relatively easy-to-collect special imagery for which the surface truth information would be superior to that for existing imagery.

2.5 RADAR MEASUREMENT OF LAKE AND RIVER ICE

The present interest in use of radar systems to monitor lake ice primarily developed because of the need to extend the Great Lakes shipping season into the winter months. Extension of the season depends largely on improvements in the ability to gather information regarding the extent and thickness of the ice. Quick, accurate, and comprehensive information about the position, extent, and relative thickness of ice cover can be made available to shippers on a timely basis for optimizing navigation routes and the deployment of ice breakers only if repeated, often daily, reconnaissance is made of the ice cover. In view of the weather and the short daylight during the winter in the latitudes of the Great Lakes, the surveillance seems possible only by means of radar systems.

Most previous study of radar return from ice has dealt with that in the Arctic Ocean and adjacent areas. We have considerable evidence that the radar return from the Arctic Sea ice is proportional to the thickness of the ice (Parashar, 1974). Even in the Arctic, most of the measurements of sea ice have involved flying imaging radars over the ice without calibration and human interpretation of the resulting images. This method has been used in the Soviet Union in an operational (or quasi-operational) monitoring system along the north shore of Siberia, but

little direct information has been obtained on the quantitative relations between scattering coefficient and sea ice in the Soviet Union.

The physical properties (mechanical, electrical, and chemical) of the sea ice are much different from those of lake ice. Even less is known about the radar return from lake ice than that from sea ice. Yet, the only operational use of radar for ice measurement in this country has been that conducted in recent years on the Great Lakes by NASA Lewis Research Center (Vickers, Heighway, Gedney, 1973).

During February and March, 1971, the United States Coast Guard acquired some side-looking radar imagery of the Mackinac-Sault Ste. Marie region of the Great Lakes using a 16.5 GHz modified AN/DPD-2 system. In addition to SLAR imagery, vertical aerial photographs were also obtained of certain areas so that radar imagery could be correlated with them. It was shown then by Photographic Interpretation Incorporation in a report prepared for the U.S. Coast Guard (U.S. Coast Guard, 1972) that the radar imagery is, indeed, valuable for interpretation of lake ice features. Several lake ice types were detected, delineated, and described through a detailed, systematic study of the images even though there was a lack of information at that time concerning the nature of the radar response from various basic categories of lake ice. At this frequency no apparent detrimental masking effect was found by snow cover on top of the ice. No snow features identifiable as such were detected. The same data were examined by Raytheon Company (U.S. Coast Guard, 1972) and identification of the various ice types was accomplished. In certain instances new ice types were identified with the aide of complementary photography. Slush, frazil, and grease ice sometimes were not differentiated on the lake ice imagery but these are all very thin and would not significantly affect navigation. Young ice could not be separated into the dark gray and gray-white types observed on the photographs so these had to be considered as one unit. Winter ice considered to be of "medium" thickness was interpreted with relative ease. However, qualitative thickness determination could not be achieved with the SLAR to any degree of confidence. Sometimes clues relative to the ice thickness were provided by the crack system. Angular cracks implied thinner ice but this technique was not reliable.

A series of X-band (AN/APS-94C) images were obtained by the NASA Lewis Research Center in the winter of 1972 - 1973 (Jirberg, et al., 1973). Correlation of the radar response with the ice conditions was established through simultaneous ground truth observations and use of ERTS-1 photography. It was possible to identify ice types such as brash, pancake and related forms because of their bright return. It was believed that these types gave the brightest return primarily because of the large vertical cross section presented by their edges. Surface roughness of ice was considered to play a dominant role in the radar return, particularly with the poor resolution of the AN/APS-94C. Only in the case of fast ice were there any indications of volume scattering. It was often impossible to discriminate unfractured ice from open water because the smooth, clear ice lacks sufficient defects to backscatter enough signal for detection. Since these returns were all obtained at angles very near grazing, the conclusions drawn should not be interpreted as being representative of all possible angles of incidence. Conceivably, the interpretation would be better if the angles of incidence were steeper, but no evidence exists to prove or disprove this conjecture.

The initial NASA Lewis Research Center experiments were continued in succeeding winters and expanded to include a data link from aircraft to satellite to a central ground station. The images were rapidly interpreted and copies of both the map interpretation and the images themselves were transmitted by facsimile radio to the captains of ships operating on the lakes. Observers from the experiment team were aboard the ships and cooperated with the captains to help them learn to interpret this type of presentation of ice conditions. It is believed that this project contributed to the unusual circumstance in the 1974 - 1975 winter that shipping was maintained throughout the entire winter season over major parts of the lakes.

During the 1973 - 1974 winter, measurements were made with the two frequency (X-band and L-band) synthetic aperture radar of the Environmental Research Institute of Michigan (Bryan and Larson, 1975). Two sites near the entrance to the Great Lakes were studied: White Fish Bay on Lake Superior and the Straits of Mackinac between Lakes Michigan and

Huron. Both HH (horizontal transmit - horizontal receive) and HV (horizontal transmit - vertical receive) images were produced in each band. These systems have resolutions an order of magnitude better in range and two orders of magnitude better in azimuth than the APS-94C used in the NASA Lewis experiments.

Smooth black ice with imbedded brash ice gave weak returns and rough brash ice gave strong HH returns at both frequencies. In one relatively smooth area , moderate return occurred only on the L-band images. One area of poorly developed ice foot showed only on X-band. In most cases, pressure ridges showed up on all images but one could only be detected on the cross-polarized X-band image. Interpretation suggested that much of the scatter was from the lower surface of the ice, particularly at L-band.

No measurements of river ice have been reported. Presumably, a radar with adequate resolution could distinguish many features of river ice and would clearly show up the ice jams developing during the spring. However, this must only remain a conjecture until experiments are conducted.

Characteristics of ice in small impoundments and natural lakes are also of interest to hydrologists. Almost nothing has been done along this line, although a few observations were made with AN/APS-94C images along the north coast of Alaska by Campbell, et al., (1975). Distinctions were possible between the radar returns from lakes frozen to the bottom and lakes with underlying water. Quite likely this happened because in the very cold Arctic environment the signal penetrated the ice to a much greater extent than would likely in regions where more moisture would be present in the ice because of higher temperature and because of spray coming up onto the ice either from open areas or from leads. In some cases an apparent boundary in the ice was observed which was attributed to the edge of the region of freezing to the bottom and therefore, this boundary should be an indication of the area containing an underlying, unfrozen water region. Such measurements would be of great interest to fish biologists in small lakes in other parts of the country as well as Alaska. This calls for more research, since the observations

reported were essentially of a "chance" nature.

In conclusion, we note that even with a very-poor-resolution radar, the AN/APS-94C, operating at the one frequency of 9 GHz and at angles of incidence very near grazing, a significant improvement has been made in the ability to maintain shipping during the winter on the Great Lakes. Almost no effort has gone into determining optimum frequencies; the only experiment being reported by the Environmental Research Institute of Michigan using a two frequency, X-band and L-band system. To our knowledge, no effort at all has gone into determining the proper angle of incidence for measurement of lake ice. No systematic effort has been undertaken to determine either the proper frequency or the proper resolution. Establishment of an optimum lake-ice monitoring system definitely calls for the use of a microwave spectrometer located on the ice or on an ice breaker so that questions of appropriate angle of incidence, frequency, and polarization can be resolved. Furthermore, some fine-resolution imagery such as that by ERIM should be successively degraded to poor resolutions so that the needed resolution for different parts of the ice mission can be established. The NASA Lewis demonstration is a fine example of a system that even without optimization has permitted radar to show high value in environmental monitoring. The success of the relatively poor system should encourage adequate experimentation so that a more nearly optimum system can be specified for future application both on aircraft and spacecraft.

SECTION 3. MISSION REQUIREMENTS

A brief study has been conducted of mission requirements. This study is based partly upon the results of our study of the capabilities of radar and partly upon a simplified orbital situation. A detailed study of orbits is beyond the scope of this report.

3.1 ANGLE OF INCIDENCE REQUIREMENTS

Studies of radar backscatter clearly show that specific ranges of the angle of incidence are required for specific measuremene missions and that these angles are different for different parameters in water resources determination. In some cases, the required angles of incidence have been established; in others, the research is not far enough along so that we can know what they are. Table 3.1-1 illustrates these requirements as known at present.

TABLE 3.1-1. ANGLE OF INCIDENCE REQUIREMENTS FOR WATER RESOURCES RADAR MISSIONS.

Soil moisture	7° - 22°
Snow/Freeze-Thaw	TBD (To be determined)
Standing/Flowing Water	
(open areas)	>30°
(forested areas)	10° - 30°
Lake and River Ice	TBD (> 45° used to date)

As indicated in Section 2.2, the angular range for soil moisture measurement is critical. Even a range as great as 7° to 22° goes somewhat beyond the desirable angles, but measurements out to somewhere between 20° and 25° appear feasible both in bare and vegetated terrains. Inside 7° even if a measurement were feasible from a radar backscatter point of view, it would be exceedingly hard to make because of the problem in securing adequate range resolution at such steep angles of incidence.

The situation on measuring hydrologic parameters important in snow and in measuring the location of the freeze/thaw line is not clear. Hence, this must be determined by future research. Preliminary indications at 35 GHz indicate that scatter at that frequency is more or less independent of angle. However, the preliminary measurements at lower frequencies tend to indicate the opposite; namely, that scatter is quite angle-dependent. The snow conditions in the two cases were different and the explanation of the difference is unknown. The freeze/thaw line should be detectable at any angle of incidence but the actual best angle is unknown.

For standing and flowing water in open areas, a relatively large angle of incidence is appropriate to enhance the contrast between the smooth water and the rougher land. In particular, the larger angle is appropriate in areas where wind is likely to cause a roughening of the water surface and enhance the return, particularly near the vertical. In forested areas, the situation is different in two ways: the vegetation scatter and attenuation must be overcome by pointing at angles of incidence near vertical and the likelihood that the water surface will be severely roughened by wind is lessened.

The matter of appropriate angle of incidence for lake and river ice has never been addressed in an experiment. The imaging radar used to date have all operated at relatively large angles of incidence; in fact, for most of the measurements made in the Great Lakes experiment by NASA Lewis Research Center the angles of incidence exceed 70°. Thus, we know that measurements can be made successfully at these angles but have no idea as to whether these are the optimum angles.

In the systems presented in other parts of the report, a scanning arrangement is set up to cover two ranges of angle, one from 7° to 22° designed specifically for soil moisture measurements and another from 22° to 37° designed to utilize the same antenna configuration as for the soil moisture but to make measurements for other parameters where the steep angle is not so desirable. In the inner part of that range, the soil moisture effect is still rather strong and the measurements of other quantities where bare soil can be seen through the vegetation may be partly confused by variations in soil moisture. Presumably, this

may be a reasonable range for snow measurements and although less than optimum for water and open areas, should be adequate for that purpose as well as for water and forested areas. Experience with measurements over sea ice indicates that the 22° to 37° range would be adequate for that class of ice and there is no particular reason to assume that it would not be adequate for lake and river ice. However, no measurements in this range of angles have, in fact, been made over lake or river ice. Thus, the angular range is selected primarily from equipment considerations with the hope that it will be adequate for the ice and snow measurements rather than from any evidence.

3.2 COVERAGE REQUIREMENTS AND CONSIDERATIONS

The frequency of repetitive coverage has been addressed but only in a somewhat cursory way. A complete study of the necessity for repetitive coverage would have been very expensive involving checking with numerous users. This has been accomplished other places and is not repeated here. The problem of obtaining adequate coverage with sensors in the visible range is realted both to the swath width for the image and to the illumination and cloud cover. In the radar case, the swath width is the determining factor since clouds and night time do not interfere with the radar coverage. However, in some situations, the difference between day and night conditions even for radar can be significant because of the effect of the sun both on vegetation and on melting of the surface of snow and ice, and this factor must be taken into account if night time coverage as well as day time coverage is to be used.

In some of the situations in which a radar is used for hydrologic purposes, the frequency of repetition is not as important as the ability to obtain timely coverage at a particular area when some significant hydrologic phenomenon is occuring. For instance, flood monitoring should occur within a day or two of the time the flooding begins. The soil moisture monitoring associated with the measurement of rainfall must occur before so much evaporation has taken place that the upper layer of the soil has dried out. Snow measurements must be made at critical

times associated with melting and the freeze/thaw line should be monitored both in the fall where the time of freezing is critical with regard to moisture stored in the soil and in the spring at times when melting is beginning to occur so that the ability of the melt water to permeate into the soil rather than run off as flood water should be ascertained.

These estimates of the required coverage periods are shown in Table 3.2-1.

TABLE 3.2-1. ESTIMATED REPETITION INTERVALS FOR HYDROLOGIC PARAMETER MEASUREMENT

Soil moisture	2 to 10 days
Snow	Monthly in winter, six days at critical melt period
Freeze/thaw line	14 days in winter; 3-7 days at critical periods in fall and spring
Floods	On demand within two days
Lake areas	21 days
Post-Rainfall Standing Water	6 days or on demand
Rivers	Unknown
Great Lakes Ice	1-2 days
Small lake ice	14 days
River ice	3-6 days spring; 14 days winter

Achieving some of the rapid repetition rates will be difficult with radar because of swath width limitations, although it is easier than it would be if it were not possible to operate both day and night. Furthermore, the situation may be improved by use of radars looking out to both sides of the spacecraft. This problem has not been addressed in detail because the gap in coverage near nadir results in a complicated problem in the inter-relations between the orbital parameters and the coverage when two separate swaths with a gap between must be considered. Nevertheless, this arrangement does permit a significant improvement in coverage for some areas in spite of the gaps.

The problem of pointing the radar on demand for such applications as flood monitoring has been addressed elsewhere in the report. The pointing may be achieved by mechanical rotation of an antenna, by electrically scanning the antenna, or by rotation of the spacecraft. Any time this kind of activity takes place it must be carefully coordinated with the pulse repetition rate and processor parameters of the radar.

The radar is inherently limited by ambiguity between range and azimuth measurements. In this report, a scanning synthetic aperture has been proposed as a means to partially overcome this problem. The scanning radar seems capable of accomplishing the mission for soil moisture measurement although some difficulty might exist for measurements requiring finer resolutions. In a preliminary examination of the problem, swath widths required for different repetition intervals were calculated on the assumption of a "perfect" polar orbit with no overlap. It is presented here to give an indication of the best possible situation with a simple orbit. For coverage of a particular latitude, the situation might be improved by an orbit with maximum excursion to about that latitude, so that the radar flies along an east-west path for a significant part of the orbit.

In Table 3.2-2 the required swath widths are shown for different repetition intervals for two heights, 435 km and 1000 km, for the spacecraft (for the simplified polar orbits). Swath widths required for single pass are listed as "day time only" although they could also be applied to night time only. The swaths listed as "day and night" are on the simplified assumption that the day passes and the night passes would be side-by-side. In fact, it is not likely that such an orbit could be achieved but at least this gives an idea of the limit for the required swaths to achieve this kind of coverage with a polar orbit. Since the ambiguity limitations on a spacecraft radar with an antenna of reasonable length (say, less than 10 meters) force a single beam position to have a swath of under 100 km in most cases, frequency repetitions require that multiple beams to one side or to both sides of the spacecraft be used, and that both the day and night passes be used. Although the swaths required are greater for the 1000 km height than for the 435 km height, it is

TABLE 3.2-2. SWATH WIDTHS REQUIRED FOR REPEAT COVERAGE-PERFECT POLAR ORBIT - SIMPLIFIED CALCULATIONS

Repetition Interval (days)	Swath for Daytime Only Equator (km)	Swath for Daytime Only 45° Latitude (km)	Swath for Day and Night Equator (km)	Swath for Day and Night 45° Latitude (km)
435 KM HEIGHT				
2	1295	916	698	458
4	647	457	324	229
6	432	305	216	153
10	259	183	130	92
15	173	122	87	61
20	130	92	65	46
1000 KM HEIGHT				
2	1504	1063	752	532
4	752	532	378	266
6	501	354	251	177
10	301	213	151	107
15	201	142	101	71
20	150	106	75	53

possible to achieve these swaths within a limited range of angles more readily at the higher altitudes.

One of the major difficulties in achieving the required swath widths for repeated coverage is the restricted range of angles appropriate for soil moisture imaging, as illustrated in Table 3.2-3 where the table shows two different conditions for 15° ranges. The sample designs presented later in this report actually refer to 15° ranges of pointing angle but 15° ranges of incidence angle are also shown. The pointing angles and incidence angles are nearly the same for the inner ranges but for a scan to 37° there is a significant difference.

If we consider only part B of Table 3.2-3 we observe that the 2 day repeat cycle required for some of the soil moisture applications simply cannot be met, even at 100 km, within the desirable range of angles. Of course, this repeat cycle might be met just barely with a spacecraft at a height of 1000 km by coverage out both sides of the spacecraft, although some gaps would definitely remain because of the nature of real orbits.

The 6-day interval required for some other applications appears feasible to meet if we use the spacecraft on both the ascending and descending parts of the orbit, although some question may remain because of difficulties in overcoming the problem of overlapping and gaps, and certainly there would be some gaps at the equator. Thus, for some of the soil moisture applications, it appears that two spacecraft are required if the short-interval coverage is needed. On the other hand, for other applications demanding pointing at a particular time, such as flooding, a spacecraft at 600 km altitude probably could achieve the desired timing, since it would be close enough to point within some appropriate range of angles within about a two-day interval. Pointing well beyond 37°, however, would call for significant modifications in the design of the system, and probably a larger antenna would have to be included if this mission were to be accomplished.

Adequate monitoring of lake ice would be impossible for the single satellite unless the system were designed for an exceedingly wide swath. Whether a scanning synthetic aperture could be designed to cover a wide-

TABLE 3.2-3. SWATH WIDTHS POSSIBLE FOR ONE-SIDE COVERAGE

(a) 15° Ranges of Incidence Angle

	7° - 22°		22° - 37°	
Height (km)	Swath* (km)	Days for Polar Orbit at 45° Latitude (day & night passes)	Swath† (km)	Days for Polar Orbit at 45° Latitude (day & night passes)
300	84.4	15	98	13
435	122	7.5	138	6.6
600	169	5.6	184	5.2
1000	281	3.8	282	3.8

* Calculated with Plane Earth Approximation

† Calculated Using Spherical Earth - 40,000 km Circumference

(b) 15° Ranges of Pointing Angle

300	84.9	15	107	11.9
435	123	7.4	158	5.8
600	170.7	5.5	221	4.3
1000	286	3.7	383	2.8

enough swath has not been ascertained. Certainly, the trade-offs involved, resolution and number of independent looks, would have to be examined very closely. Since the azimuth resolution for the AN/APS-94C used in the aircraft lake-ice coverage is quite poor at the outer ranges (more than 600 meters), these trade-offs might indeed be feasible but would have to be the subject of a separate study.

The designs presented here as examples all deal with the 435 km height. Some of the swath widths mentioned are slightly larger than those for the 7° to 22° case at 435 km shown in Table 3.2-3. This is because the actual range of angles of incidence in these examples is somewhat larger than 15° with the center of the beam being pointed at 7° and 22° at the extremes of the scan.

3.3 POLARIZATION REQUIREMENTS

Polarization requirements for the various parts of the hydrologic mission are in general not known. In the case of soil moisture, however, the angles of incidence at which the measurement must be made are so close to vertical that the two like polarizations are essentially the same, so they should make no difference. Indications from Ulaby's measurements referred to in Section 2.2 are that cross-polarization provides no advantage for the soil moisture measurements. However, cross polarization may be useful in helping to distinguish soil moisture effects from vegetation effects because of differences in certain vegetation responses between like and cross polarization.

For the snow and freeze/thaw line determination the proper polarization to use awaits further experimentation. Insufficient data are available at present to indicate whether there is an advantage to either of the like-polarized choices or to the use of cross-polarization with or without the like polarizations.

In the case of standing and flowing water, horizontal polarization is indicated because the radar return from water is lower at the polarization than it is for vertical polarization, whereas in most cases, the radar return from the land is of comparable magnitude for the two polarizations.

Cross polarization has been shown helpful in distinguishing vegetation growing out of the water and consequently should be included in a mission involving wet lands and marsh lands.

The proper polarization to use for lake and river ice has not been determined experimentally. In the case of sea ice, recent scatterometer observations by the Canada Centre for Remote Sensing (de Villiers, 1976; private communication) have supported previous observations of a preliminary nature by Parashar that indicate cross polarization may be more useful than either of the like polarizations, since an ambiguity that occurs with like polarization does not occur on the cross polarized image. Since this has not been tested over the lake ice and since the physical phenomena in scattering from sea ice appear to be different from those for scattering from lake ice, the question remains completely open for the fresh water ice.

These comments are summarized in Table 3.3-1.

TABLE 3.3-1. REQUIRED POLARIZATIONS

Soil moisture	No difference
Snow/Freeze-Thaw	TBD
Standing/Flowing Water	HH, Cross
Lake and River Ice	TBD

3.4 RESOLUTION REQUIREMENTS

No quantitative evaluations have been made of the resolution required for any aspect of the water resources mission, as indicated in Table 3.4-1.

TABLE 3.4-1. REQUIRED RESOLUTIONS

Soil moisture	TBD
Snow/Freeze-Thaw	TBD
Standing/Flowing Water	TBD
Lake and River Ice	TBD

A methodology for ascertaining the required resolution has recently developed (Moore, 1976). The only possible application of that study to water resources is an indication that a resolution of the order of 14 meters for a single-look coherent radar with a square picture element is appropriate for land/water boundaries. The land/water boundaries in the particular targets studied, however, were primarily coast lines and, consequently, they may or may not be relevant for small lakes and rivers.

Statements have been made that a very coarse resolution may be appropriate for soil moisture determination. Certainly, some indication of this comes from the passive microwave measurements on Skylab where the 100 km resolution of the S-194 L-band radiometer was apparently enough to distinguish major soil moisture conditions. On the other hand, the still coarse but finer resolution of the S-193 system, both passive and active (10 - 20 km), was not as successful in establishing a correlation between soil moisture and the microwave signals. Whether this had to do with problems in surface truth with the higher frequency or with something about the general nature of the distribution of soil moisture could not be determined because of the difficulty because no finer resolution was available, but some evidence exists that the problem may have had to do with the frequency. An average over an area like that observed by the S-193 radiometer was tried with the S-193 radiometer and scatterometer and the correlation found with the finer resolution was not improved by the averaging.

The methodology for resolution determination depends upon obtaining fine resolution, real-aperture or synthetic-aperture, images of typical areas with radar having parameters comparable with those likely to be used in the hydrology mission. The images are successively degraded electronically or optically to coarser and coarser resolution. The degraded images and the originals are presented to interpreters who are required to give a merit, or interpretability, rating to each image in terms of the various parameters sought from the image. The interpretability ratings can be plotted as a function of resolution and it has been determined for square picture elements having equal numbers of independent samples averaged that the interpretability decreases exponentially with the area of the

picture elements. Thus, a critical point, such as that where the interpretability decreases to 1/e of its initial value, can be determined for each type of factor to be observed.

In cases where radar imagery is not available with suitable parameters, a first cut at determining the proper resolution could be obtained by using photographs with fine resolution and degrading them as with the radar images. For those items that the interpreter should be able to identify on a photograph , the same kind of relation between interpretability and resolution should prevail; consequently, an indication can be obtained of the resolution that would be required for a radar. The study demonstrated the equivalence between resolutions for different numbers of independent samples, including the essentially infinite number that applies to the photograph. Thus, the critical resolution determined from analysis of photographs could be scaled, depending upon the number of independent samples averaged by the radar, to determine a comparable critical resolution for the radar itself. Since resolution is such an important parameter in the design of any radar system (and, indeed, any spacecraft sensor) the importance of such a study should not be underestimated. We believe that this study should be conducted as soon as possible.

VOLUME I REFERENCES

Batlivala, P. P. and F. T. Ulaby, "Effects of Roughness on the Radar Response to Soil Moisture of Bare Ground," RSL Technical Report 264-5, Remote Sensing Laboratory, University of Kansas Center for Research, Inc., September, 1975.

Batlivala, P. P. and F. T. Ulaby, "On the Feasibility of Monitoring Soil Moisture Using Active Microwave Remote Sensing," RSL Technical Report 264-8, Remote Sensing Laboratory, University of Kansas Center for Research, Inc., August, 1976.

Blanchard, B. J., 1976; private communication.

Bryan, M. L. and R. W. Larson, "The Study of Fresh-Water Lake Ice Using Multiplexed Imaging Radar," Journal of Glaciology, Vol. 14, No. 72, 1975.

Campbell, W. J., W. F. Weeks, R. O. Samseier and P. Gloersen, "Geophysical Studies of Floating Ice by Remote Sensing," Journal of Glaciology, Vol. 15, No. 73, 1975, pp. 305-328.

Cosgriff, R. L., W. H. Peake and R. C. Taylor, "Terrain Scattering Properties for Sensor System Design (Terrain Handbook II)," Ohio State University Experiment Station, 1960.

Drake, B., M. L. Bryan, C. L. Liskow, R. A. Shuchman, R. W. Larson, and R. A. Rendleman, "The Application of Airborne Imaging Radars (L- and X-band) to Earth Resources Problems," Radar and Optics Division, ERIM, Ann Arbor, Mich., Tech. Rpt. under Contract NAS 10-8333, 83 p., 1974.

Hanson, Bradford C. and Louis F. Dellwig, "Radar Signal Return from Near-Short Surface and Shallow Subsurface Features, Darien Province, Panama," Part II, Proceedings of the American Society of Photogrammetry Fall Convention, Walt Disney World, Lake Buena Vista, Florida, October, 1973, pp. 1017-1031.

Jirberg, R. J., R. J. Schertler, R. T. Gedney, and H. Mark, "Application of Chloride Ice at UHF and Microwave Frequencies," Journal of Geophysical Research, Vol. 76, No. 20, pp. 4922-4931, July, 1971.

Linlor, 1976; private communication.

de Loor, 1970; private communication.

Lundien, J. R., "Terrain Analysis by Electromagnetic Means, Report 2, Radar Responses to Laboratory Prepared Soil Samples," U.S. Army Engineer Waterways Experiment Station, Technical Report 3-693, Vicksburg, Mississippi, 1966.

Lundien, J. R., "Terrain Analysis by Electromagnetic Means," Technical Report 3-693, Report 5, U.S. Army Engineer Waterways Experiment Station, Vicksburg, Mississippi, 1971.

MacDonald, H. C. and W. P. Waite, "Soil Moisture Detection With Imaging Radars," Water Resources Research, Vol. 7, No. 1, 1971.

McCoy, R. M., "An Evaluation of Radar Imagery as a Tool for Drainage Basin Analysis," CRES Technical Report 61-31, University of Kansas Center for Research, Inc., Lawrence, Kansas, p. 1-192, 1967.

Moore, R. K., "Use of Microwaves for Snow, Freeze-Thaw and Soil Moisture Determination - A Needed Research Program," RSL Technical Memorandum 100-1, Remote Sensing Laboratory, University of Kansas Center for Research, Inc., Lawrence, Kansas, February, 1972.

Moore, R. K., "SLAR Image Interpretability -- Tradeoffs Between Picture Element Dimensions and Non-Coherent Averaging," RSL Technical Report 287-2, Remote Sensing Laboratory, University of Kansas Center for Research, Inc., Lawrence, Kansas, January, 1976.

Parashar, Surendra K., "Investigation of Radar Discrimination of Sea Ice," (Ph.D. Thesis), RSL Technical Report 185-13, Remote Sensing Laboratory, University of Kansas Center for Research, Inc., Lawrence, Kansas, 383 p., 1974.

Roswell, C., "Detectability of Water Bodies by Side-Looking Radar," RSL Technical Report 177-16, Remote Sensing Laboratory, University of Kansas Center for Research, Inc., Lawrence, Kansas, 46 p., 1969.

Rydstrom, H. O., "Flood Warning and Assessment Assisted by High Resolution Radar," GIB-9200, Goodyear Aerospace Corp., Litchfield Park, AR., 3 p., 1970.

Simpson, R. B., "Geographic Evaluation of Radar Imagery of New England," Project in Remote Sensing, Dartmouth College, Hanover, New Hampshire, 1969.

Stiles, W. H., F. T. Ulaby, B. C. Hanson, L. F. Dellwig, "Snow Backscatter in the 1-8 GHz Region," RSL Technical Report 177-61, Remote Sensing Laboratory, University of Kansas Center for Research, Inc., Lawrence, Kansas, June, 1976.

Ulaby, F. T., "Radar Response to Vegetation," IEEE Transactions on Antennas and Propagation, Vol. AP-23, January, 1975.

United States Coast Guard, "Interpretation of Winter Ice Conditions from SLAR Imagery," Report No. DOT-CG-14486-A, Department of Transportation, Office of Research and Development, Washington, DC 20591, February, 1972.

United States Coast Guard, "Analysis of SLAR Imagery of Arctic and Lake Ice," Report No. DOT-CG-14486-A, Department of Transportation, Office of Research and Development, Washington, DC 20591, February, 1972.

Vickers, R. S., J. Heighway, and R. Gedney, "Airborne Profiling of Ice Thickness Using a Short Pulse Radar," NASA TM X-71481, proposed presentation at Advanced Concepts and Techniques in the Study of Snow and Ice Resources, Monterey, CA, December 2-6, 1973, 5 pp. with figures.

de Villiers, 1974; private communication.

Waite, W. P. and H. C. MacDonald, "Snowfield Mapping with K-Band Radar," Remote Sensing of Environment, Vol. 1, pp. 143-150, 1970.

Young, J. D. and R. K. Moore, "Active Microwave Measurement From Space of Sea-Surface Winds," Submitted for review to IEEE Transactions on Antennas and Propagation, April, 1976.

CRINC

CRINC LABORATORIES

Chemical Engineering Low Temperature Laboratory

Remote Sensing Laboratory

Flight Research Laboratory

Chemical Engineering Heat Transfer Laboratory

Nuclear Engineering Laboratory

Environmental Health Engineering Laboratory

Information Processing Laboratory

Water Resources Institute

Technical Transfer Laboratory

Air Pollution Laboratory

Satellite Applications Laboratory