General Disclaimer

One or more of the Following Statements may affect this Document

- This document has been reproduced from the best copy furnished by the organizational source. It is being released in the interest of making available as much information as possible.

- This document may contain data, which exceeds the sheet parameters. It was furnished in this condition by the organizational source and is the best copy available.

- This document may contain tone-on-tone or color graphs, charts and/or pictures, which have been reproduced in black and white.

- This document is paginated as submitted by the original source.

- Portions of this document are not fully legible due to the historical nature of some of the material. However, it is the best reproduction available from the original submission.

Produced by the NASA Center for Aerospace Information (CASI)

FEASIBILITY OF PRODUCING CLOSED-CELL METAL FOAMS IN A ZERO-GRAVITY ENVIRONMENT FROM SPUTTER-DEPOSITED INERT GAS-BEARING METALS AND ALLOYS. (74-10)

POST-FLIGHT TECHNICAL REPORT, SPAR FLIGHT #2
AND FINAL REPORT

BATTELLE-NORTHWEST LABORATORIES
MATERIALS DEPARTMENT
MATERIALS AND PROCESS ENGINEERING SECTION
RICHLAND, WA 99352

by

JW Patten and EN Greenwell

December 20, 1976

(NASA-CR-150178) FEASIBILITY OF PRODUCING CLOSED-CELL METAL FOAMS IN A ZERO-GRAVITY ENVIRONMENT FROM SPUTTER DEPOSITED INERT GAS-BEARING METALS AND ALLOYS. POST-FLIGHT TECHNICAL (Battelle Pacific Northwest Labs.) G3/12

N77-17116
HC A05
MF A01
Unclas
13845

NASA Contract NAS8-31384
Prepared for George C. Marshall Space Flight Center
Marshall Space Flight Center, Alabama 35872

FEB 1977
RECEIVED
NASA STI FACILITY
INPUT BRANCH

ABSTRACT

This report describes technical results obtained on the second SPAR flight from Experiment 24-10, "Feasibility of Producing Closed-Cell Metal Foams in a Zero-Gravity Environment from Sputter-Deposited Inert Gas-Bearing Metals and Alloys." These results are considered along with results of related experiments obtained on the first SPAR flight[1] and conclusions are presented.

TABLE OF CONTENTS

	Page
SUMMARY	1
INTRODUCTION	
Foam-Formation Concept	3
Battelle-Northwest Experiments to Produce Metals Foams in Space	4
OBJECTIVE	6
Phase I - Feasibility	7
Phase II - Experimental Scale-Up	7
Phase III - Fabrication of Prototypic Configurations for a Specific Application	8
APPROACH	
Phase I - Feasibility	8
Phase II and Phase III - Experimental Scale-Up and Fabrication of Prototypic Configurations for a Specific Application	10
REQUIREMENTS	11
EXPECTED RESULTS	11
MATERIALS AND PROCEDURES	
Constraints on Experiment Design	12
Furnace Design	12
Furnace Control Electronics - SPAR Flight #2	
Requirements	13
Circuit Description	13
Sample Preparation by Sputter Deposition	14
Ground-Based Testing prior to SPAR Flight #1	15
SPAR Flight #1	21
Ground-Based Testing prior to SPAR Flight #2	28

TABLE OF CONTENTS -- continued

Page

ANALYSIS OF RESULTS AND DISCUSSION - SPAR I

Ground-Based Tests 30

SPAR Flight #1 31

ANALYSIS OF RESULTS AND DISCUSSION - SPAR II

Ground-Based Tests 33

SPAR Flight #2 34

REFERENCES 55

APPENDIX I - Furnace Control Electronics SPAR Flight #2

APPENDIX II - Test Specifications and Requirements for SPAR Payload II, Experiment 74-10

APPENDIX III - TCU Refurbishing Procedure

SUMMARY

This report describes technical results obtained on the second SPAR flight from Experiment 24-10, "Feasibility of Producing Closed-Cell Metal Foams in a Zero-Gravity Environment from Sputter-Deposited Inert Gas-Bearing Metals and Alloys." These results are considered along with results of related experiments obtained on the first SPAR flight[1] and conclusions are presented. The experiments from both SPAR flights represent a one-year feasibility study. They were critical experiments since development and operation of a new furnace design with an associated fully automatic electronic control package was required in addition to demonstration of the metal foam formation concept.

The process of metal foam formation from sputtered deposits was demonstrated in both one-gravity and zero-gravity environments. Very uniform cell-size foams were produced in one-gravity in one series of experiments, possibly because a very thick oxide scale was allowed to form, thus providing uniform constraints to the samples. Bubble coarsening was observed in these samples with increasing time above the melting point. In other one-gravity experiments and in all zero-gravity experiments, the oxide scales fractured during expansion of the foam, providing nonuniform sample constraint. In the thickest samples foamed in zero-gravity, much more bubble coarsening and a larger void volume fraction were observed with increasing time above the melting point. However, the effects of the oxide scale were still quite pronounced and kinetic information on foam formation behavior

was not obtained. It is also felt that much more difference would be noted between ground-based and zero-g foam behavior without mechanical restriction from oxide scale. Mechanical constriction should be examined independently by providing a closed container for the foaming material, however, as there may be an effect on bubble coalescence. In addition note that sample section should remain large or be increased relative to expected bubble size in order to minimize the effects of sample surfaces on bubble movement in the molten sample.

It is felt that the zero-gravity environment will be essential to prevent density driven bubble segregation and retain pre-formed shapes in anything but the simplest geometries and smallest sizes of useful engineering materials, particularly since large cross-sections will require slower heating and cooling. The current experiments were restricted to Al because of furnace temperature limitations and the desire to examine a commercially important material. However, since future experiments should be conducted with a metal which does not form a strong and adherent oxide, maximum furnace temperature should be extended to at least 1080°C to allow experimentation with copper.

INTRODUCTION

Foam-Formation Concept

Experiments to examine the possibility of manufacturing controlled density metals (metal foams) in space were first initiated by General Dynamics/Convair.[2] Manufacture of these foams was regarded as desirable because of their unique characteristics such as high stiffness-to-density ratio, high damping capability, high impact resistance, and low thermal conductivity. In addition it should be pointed out that such foams, unlike similar ceramic materials, are expected to be electrically conducting and to lend themselves to fabrication by conventional metal forming, welding, brazing, etc., techniques.

Potential applications for these metal foams include:

- Hydride formers such as the Fe-Ti system for hydrogen storage cells.
- Fusion reactor fuel cells.
- Fissile fuel element material.
- Structural materials with requirements for one or more of the following properties:
  1. High structural modulus.
  2. Low density.
  3. High resistance to environmental effects.
  4. Conductivity.
  5. Easy fabrication.
  6. High damping coefficients.
- Deep sea components, armor.
- Tip seals for gas turbine blade protection.

Closed-cell foams would be particularly attractive in many of these applications due to isolation of each cell from its neighbors and the environment. If similar foam structures could be fabricated from nonmetallic crystalline materials and glasses, then they should find application in areas requiring low density, very low conductivty, good corrosion resistance and resistance to other environmental effects, retention of properties to high temperature, and very good thermal shock resistance.

The methods first proposed for producing these foams, however, are complicated, require equipment that has not been fully developed, and are restrictive as to the gas-metal combinations that may be examined.

Battelle-Northwest Experiments to Produce Metal Foams in Space

An alternative method with none of these shortcomings was applied by Battelle-Northwest to produce metal foam materials on flights conducted by this Space Processing Rocket Experiment Project in a Phase I feasibility investigation.

Briefly, the technique consists of high-rate sputter depositing, in a 1-g environment, the pure metal or alloy to be foamed under such conditions that a controlled quantity of the inert sputtering gas is trapped uniformly throughout the deposit. Next this metallic deposit is melted in a zero-g environment, allowing the inert gas atoms to coalesce, produce bubbles, and expand to provide a closed cell foam structure. On cooling, the foam solidifies and the atmosphere within each bubble is high-purity, low-pressure inert gas, effectively a high quality vacuum.

Experiments preliminary to the first proposal were conducted in a 1-g environment. We were able to reproducibly achieve trapped inert gas contents of 0 to 2200 ppm during sputter deposition. When samples of these materials were very rapidly heated by discharge of a capacitor bank and immediately cooled, a metal foam was obtained. However, this technique of rapidly heating and cooling is only applicable to thin specimens, primarily due to rf skin effects. Slower heating necessitates longer times at temperature above the melting point. Here the inertia of the molten metal is overcome, relative density differences causes separation of molten metal and gas, bubbles coalesce, and a general effect similar in outward appearance to boiling is observed. When this occurs, a uniform metal foam does not result.

It was expected that similar experiments in a zero-g environment would produce quite different results. Specifically, it was expected that there would no longer be a density difference driving force to induce separation of the gas bubbles from the metal matrix. Relative surface energies, the ideal gas laws, and viscosity of the molten metal would be expected to govern behavior. It should therefore be possible to control bubble size, bubble frequency, bubble wall thickness, and the resulting foam density over a wide range by varying trapped gas content, melt temperatures and time at temperature.

The fundamental distinctions between the Battelle series of experiments and the experiments previously conducted

arise from the method of incorporating the gas in the metal. Gas trapping during sputter deposition is a well documented phenomenon, although trapping mechanisms are poorly understood.[3-8] This gas trapping allows a very wide range of metals and alloys to be considered, permits a great simplification of in-flight experimental apparatus (only radiant heating, quenching, and temperature sensing equipment are required) and makes use of an extensive sputtering technology that is already well established.

OBJECTIVE

The long-range objective of the program initiated by this Phase I Feasibility study is to produce metal foam materials from sputtered metal deposits. It is anticipated that these foams will be produced with a wide range of pre-selected and reproducible densities and uniform, isolated, evacuated cells. It is further anticipated that the foams will be produced from a wide range of metallic materials and in complex shapes usable in engineering applications.

The work required to achieve this long-range objective was divided into the three phases listed below. As originally proposed, Phase I was to be completed in the first two years. However, Phase I was rescheduled to be completed in the first year in order to aid NASA/MSFC in attaining their flight scheduling objectives. The results of the Phase I experiments will be used to direct the experiments in Phases II and III.

Phase I - Feasibility

A. Produce inert gas-bearing metal sputtered deposits and melt small samples of these deposits in a zero-g environment to produce a foam. Evaluate the effects of gas concentration, melt temperature, and time at melt temperature on foam structure and foaming kinetics. Correlate results with data from similar experiments conducted in a 1-g environment. Formulate a model describing the effects of gravitational fields on the behavior of gases in molten metals. Measure basic physical and mechanical properties of foam samples to predict suitability for engineering applications.

B. Produce hollow right-circular cylinders of inert gas-bearing metal by sputter deposition and melt samples of these deposits in a zero-g environment to produce foamed shapes. Evaluate the feasibility of accurately predicting the shape and dimensions of complex parts formed in this manner.

Phase II - Experimental Scale-Up

A. Investigate zero-g production of more massive foam products from large sections of thick sputtered deposits.

B. Investigate additional metal (or alloy) inert-gas systems.

C. Investigate reproducible production of more complex shapes, including complex curvatures.

D. Investigate forming, cutting, welding, and brazing of metal foams.

Phase III - Fabrication of Prototypic Configurations for a Specific Application

APPROACH

Phase I - Feasibility

The experimental approach to this phase, the subject of this report, may be outlined as follows:

- Make sputtered deposits containing inert gas.
- Obtain facility for melting in space (and on ground).
- Test deposited materials and melting facility.
- Conduct space experiment.
- Evaluate the results.

Details of this approach were separated by SPAR Flight as follows:

A. The first experiments (sputtering) in Phase I were to be conducted in a 1-g environment with the objective of identifying a suitable pure metal and gas combination for further examination. Suitable sputtered deposits from this pure metal and gas system (Al and Ar) were then to be produced for the first series of tests conducted in space. Six of the 1 cm x 0.10 cm x 0.05 cm samples were to be mounted in a quartz fixture with spot-welded thermocouple leads. This fixture was to be mounted

in a TCU (Temperature Control Unit) furnace, as provided by NASA/MSFC and modified by BNW, and flown in Flight #1. In flight, the samples were to be radiantly heated to a temperature above their melting point, held at this temperature for a time less than 2 minutes and water quenched. Time and temperature were to be recorded for each sample. The metal foam samples were to be recovered for metallographic examination and measurements of density, cell size and distribution, cell wall thickness, electrical and thermal conductivity, compressive strength, and other properties. It was anticipated that only one metal-gas combination would be used for this first phase. Three gas concentrations were to be investigated. Since duplicate samples were to be exposed to each test condition, a total of 6 samples would be foamed in the zero-g environment and examined for each furnace run.

B. The second series of tests (Flight #2) to be conducted in space was to use two TCU furnaces similar to the one used in Flight #1. These furnaces were to contain both flat specimens (as in Flight #1) and specimens sectioned from sputter-deposited hollow cylinders. Foam density was to be varied by the amount of gas trapped during sputter deposition and the length of time above

the sample melting point. The two furnaces in this flight were to provide different times above the melting point to supplement data obtained in Flight #1. Evaluation was to be similar to that conducted on samples from the first flight. The three different times above the melting point were to allow an approximate Arrhenius determination of activation energies involved in the foaming process and, perhaps, speculation on the mechanism(s) involved. In addition, changes in sample dimensions and shape were to be recorded. Concurrent experiments on similar samples were to be conducted in a 1-g environment and results were to be compared with results of the zero-g experiments. A model describing the behavior of these metal foams during formation was to be formulated. The Phase I experiments were to be considered successful if uniform closed-cell metal foams with predictable densities were produced.

Phase II and Phase III - Experimental Scale-Up and Fabrication of Prototypic Configurations for a Specific Application

If the results of Phase I were sufficiently encouraging, specific Phase II and Phase III experiments were to be designed to achieve the results outlined in the OBJECTIVE section above. Since the size and capabilities of the rockets available in 2 to 3 years are in question at this time, it was not possible to specify the extent of the

experiments. It was hoped, however, that they would be considerably more ambitious in sample size and complexity that the Phase I experiments.

REQUIREMENTS

Four requirements to be satisfied for experimental success in any phase were identified as follows:

1. Samples must contain appropriate amount of inert gas.
2. Furnace and controls must function properly, i.e. heat and cool at the right time and provide accurate time-temperature data.
3. Metals must foam.
4. Foams must be recovered and identified for examination.

EXPECTED RESULTS

It was expected that a new class of engineering materials would be produced by these investigations. These materials were expected to be pure metal or alloy closed-cell foams with uniform cell size and wall thickness, and evacuated cell or cells. Good control of foam density and cell size was expected. In addition, it was expected to be possible to accurately foam-produce complex engineering shapes to final dimensions. These foams were expected to be useful in a wide range of structural applications. Additional applications such as hydrogen storage batteries and reactor fuels are also possible.

MATERIALS AND PROCEDURES

Constraints on Experiment Design

Time constraints imposed by the NASA/MSFC request to fly on SPAR Flight #1 and the availability of the Temperature Control Unit (TCU) equipment flown on previous space flights dictated that the initial metal foam experiment be based on the TCU design. This design had several drawbacks, however. It was not equipped to process more than one sample capsule, to measure sample temperature directly or to heat samples above approximately 300°C. It was determined that all of these limitations could be overcome by using only the TCU outer container and water quench apparatus and redesigning all heating elements, heat shields, sample capsules, sample geometry, temperature measurement provisions, and furnace controls. Preliminary calculations indicated that design would be much simplified if the maximum sample temperature sought was less than 1000°C.

Furnace Design

As mentioned earlier, the TCU furnaces available were modified for this project. The modifications resulted from several iterations of building and testing, and included provisions to rapidly heat six individually thermocoupled samples to near 1000°C and cool them with a water quench. The resulting design proved to be very reliable. An assembly and testing procedure was developed and was included in the previous Technical Report.[1] Photographs taken at various stages during assembly are also included in this Technical Report.

Details of the design modifications are included in Battelle Drawings R-2160, Sheet 1, Rev. 2 and Sheet 2, Rev. 0, along with a description and drawings of the Furnace Control Electronics for SPAR Flight #1, reference the previous Technical Report.

Furnace Control Electronics - SPAR Flight #2

Requirements

The control requirements for SPAR Flight #2 were:

1. Turn on furnace heating elements in both TCUs 75 seconds after launch (about 25-amp load each).
2. Maintain temperature (for 1 minute above 700°C in one furnace and for 2 minutes above 700°C in the other furnace).
3. Turn off power to heating elements.
4. Open water quench solenoid valves at the same time as heating element power is shut off.
5. Provide appropriately conditioned signals to the rocket telemetry system from the sample thermocouples, temperature reference, and input power voltage.
6. Physically, the control unit had to mount in a small space beside the TCU and withstand the 25-g vibration testing.

Circuit Description

The sample and furnace temperatures are monitored by chromel-alumel thermocouples. Seven amplifiers change these millivolt signals to the 0 to 5-volt signals required by the rocket telemetry system. A

compensated thermocouple amplifier is used to measure the cold-junction temperature and provides compensation to the other amplifier. A regulated 25-volt supply power all the amplifiers.

An EXAR 2240 M IC timer provides the delay between launch and applying power to the furnace element. A "G" switch activated by the launch acceleration triggers the timer, which closes the N219 furnace power relay 75 seconds later. A single thermocouple in the furnace center monitors the overall furnace temperature. An LM311 voltage comparator detects the moment this signal is equal to a pre-set voltage equivalent to 700°C and cycles the power relay to maintain this temperature. The quench solenoid is activated by another 2240 M timer releasing the water into the sample chamber and simultaneously the furnace power relay is turned off, preventing any further heating.

A regulated 5-volt output power the timer and provides reference bias to the amplifer and comparator.

Design and construction details are included in Battelle Drawings R-2198, Sheet 1, Rev. 1 and R-2173, Sheet 2, Rev. 0. Reproductions of these two drawings are included in Appendix I.

Sample Preparation by Sputter Deposition

The pure metal-inert gas system chosen for initial experimentation was Al-Ar. This choice was based on the melting point of Al (660°C, well below the 1000°C

equipment maximum temperature), the ready availability of pure Al target material, previously published data on Ar trapping in Al during sputtering,[3,6] and the commerical importance of Al.

Four sputter-deposition experiments (NASA #s 1-4) were conducted with each experiment producing a 12.7 cm (5 in) diameter disc of sputtered Al.

A fifth sputter deposition experiment produced a hollow cylindrical deposit of sputtered Al 1.9 cm (0.75 in) in diameter, and 0.1 - 0.2 cm (0.040 to 0.080 in) thick, and 13 cm (5 in) long.

The nominal chemical composition of all deposits is indicated in Table I. Sputter-deposition parameters, deposit thickness, and Ar content are indicated in Table II.

The sputtering apparatus and sputtering procedures have been described previously[1] and no changes other than use of a Cu tube substrate rotated over the Al target were incorporated in the most recent work.

Ground-Based Testing prior to SPAR Flight #1

Ground based testing at Battelle-Northwest (BNW) included sufficient furnace and electronics testing to assure satisfactory operation through at least five repeated heating cycles. The water quench was not operated, however, as MSFC personnel intended to replace the solenoid activating the water quench in our TCU because of a mechanical problem encountered in a

TABLE I. Nominal Deposit Composition

Element	Concentration (wt%)
Cr	0.01 to 0.1
Cu	0.01 to 0.1
Fe	0.1
Mg	0.001 to 0.01
Mn	0.001 to 0.01
Ni	0.01 to 0.1
Si	0.01 to 0.1
Ti	0.01 to 0.1
V	0.01 to 0.1
Ca	< 0.001

Not Detected

B, Cd, Co, Pb, Mo, Sn, W, Zr, Nb, Ta and Zn

*Chemical composition of the deposits was determined by standard analytical techniques and by x-ray fluorescence.

TABLE II. Sputter Deposition Parameters and Results

Experiment Number	Target Potential (volts)	Target Current (amps)	Substrate Bias (volts)	Substrate Current (amps)	Argon Pressure ($\times 10^{-3}$ torr)	Substrate Temperature (^{o}C)	Deposit Thickness (mm)	Argon Content* (ppm)
NASA #1	2000	1.5	Floating	0	6.2	21	0.2	30
NASA #2	2000	1.75	-100	1.9	6.2	21	0.9	231
NASA #3	2000	1.75	- 60	1.75	6.2	21	0.6	23
NASA #4	2000	1.75	-150	1.75	6.2	21	0.6	272
NASA #5	2000	1.75	-100	1.3	5.0	~ 21	1-2	24

*Argon content was measured by vacuum fusion techniques with gas composition measured with a quadropole mass spectrometer.

similar solenoid at MSFC. In addition, sputtered aluminum samples from the same material to be flown in the zero-g experiments were heated above their melting point in the preliminary laboratory furnace models and in the flight furnace assembly. These samples were air cooled. Metallographic examination indicated that the samples did foam and thus gave a preliminary indication that both the furnace design and the materials concepts were sound.

Modification of the TCU was completed, the associated control electronics were completed, dummy samples appropriate for the NASA testing plan were installed in the TCU, and the TCU with electronics was shipped via courier to NASA/MSFC on August 14, 1975 with delivery on August 15.

The following drawings were also completed and delivered to NASA/MSFC at this time:

Drawing Title	BNW Drawing Number
TCU Furnace Modification	R-2160 (2 sheets)
Specimen Metallic Foam Experiment	R-2170
Rocket Furnace Electronics	R-2173 (sheet 1 of 2)
Rocket Furnace Electronics Details	R-2173 (sheet 2 of 2)
Block Diagram Furnace Electronics	R-2183

In addition, the assembly procedure used to install samples in the TCU and prepare the TCU for testing was recorded and several photographs were taken during the assembly process. These drawings and the assembly procedure were included in the earlier Technical Report.[1]

The TCU was further modified at NASA (after delivery from BNW) in areas relating to gas purge fittings, water input lines, and provision for pressure equilization between the water reservoir and the furnace chamber. No drawings or written description of these modifications were prepared by NASA/MSFC.

The TCU and associated electronics withstood MSFC vibration testing the first time they were tested in September 1975. One crack was observed in the quartz heater support, but this crack was not expected to effect the experiment in any way. Several assembly screws used in the heat shield assembly worked loose, none of which would effect the experiment. However, the assembly procedure was modified and now includes RTV coating of the screws to prevent loosening during future tests and experiments. Some failures in sample thermocouple solder joints (cold junction) were also encountered and procedures were modified to provide better joint reliability.

The MSFC-provided water quench solenoid valve leaked during vibration testing. MSFC indicated that they would change valves to prevent future problems in this area.

MSFC personnel indicated that ground-based tests would be conducted on or about October 10, and that presence of the Principal Investigator or his representative would be required for installation of test samples and for furnace refurbishment.

The TCU was partially disassembled at MSFC in early October 1975 and the water quench solenoid valve was replaced.

After reassembly, a short was noted in the control thermocouple, so the TCU was immediately shipped back to Battelle. The control thermocouple was replaced with a design that was expected to be more resistant to damage. All solder joints to thermocouples were examined and some were resoldered. The TCU was shipped back to MSFC the same day it had been received.

MSFC tested the TCU through its complete temperature cycle more than one time, and after one of these cycles noted that the heating element was shorted to the TCU outer wall. The TCU was shipped back to BNW, where it was refurbished including installation of all new thermocouples, quartz sample tubes, quartz heater support, a heating element wound in such a way as to avoid the shorting problem, and new dummy test samples. The TCU was then shipped to MSFC where it again underwent testing through the complete temperature cycle, with no difficulties being encountered.

On Monday, October 20, 1975, MSFC telephoned and requested the presence of the PI and Eric Greenwell at MSFC on Wednesday, October 22, for ground-based tests. On October 22 the TCU was completely refurbished as above but including new radiation shielding and ground-based test samples. Testing difficulties associated with NASA control functions and with other experiments produced delays in the test schedule such that the first ground-based test (GB 1) was conducted on October 28. A second set of ground-based test samples was then installed in the furnace and a second ground-based test (GB 2) was

conducted. On October 30 the refurbished TCU, complete with a new set of dummy samples, was made available to MSFC for installation in the science payload and shipment to Goddard.

The ground-based tests described above provided 12 specimens for evaluation and use as a basis of comparison for the zero-gravity processed specimens. Four samples were much larger than originally planned in this group (four times as wide), see Table III. External appearances seemed to indicate that foaming had occurred, and the effects of gravity were clearly evident in sample "sagging" or flowing, see Table IV. These samples were all evaluated metallographically. In addition, a computer program designed to analyze metallography of indicated reactor fuel cell materials was modified to suit the foam material and used to provide statistical analysis of the microstructure.

The ground-based testing was conducted without any difficulties related to the TCU or its associated electronics. Experiment performance was satisfactory as was the collection of in-test time and temperature data.

However, time-temperature detailed data on these tests were not received until June 28, 1976, so that analysis of the ground-based test results could not be completed until long after SPAR Flight #1 was flown and, in fact, more than one month after SPAR Flight #2 was flown.

SPAR Flight #1

On December 2 the flight samples and flight furnace components were delivered to White Sands Missile Range, New

ORIGINAL PAGE IS
OF POOR QUALITY

TABLE III. Quantative Observations on Foam Specimens Associated with SPAR Flight #1

Processing	Specimen Number	Mean Cell Size (μ)	Median Cell Size (μ) Volume	Cell Count/cm^3	Cell Volume Fraction (%)	Cell Specific Surface Area (cm^2/cm^3)	Content (ppm)	Width* (mm)	Thickness* (mm)	Melting Point (sec)	Cooling Rate through Melting Point (°C/sec)
Space	1-D-1	2.66	5.00×10^{1}	2.87×10^{8}	1.15	1.07×10^{2}	30	1.1	0.2	31.0	1310
	1-D-2	5.05	3.99×10^{1}	1.32×10^{8}	3.34	1.87×10^{2}					
	1-D-3	6.39	6.27×10^{1}	7.10×10^{7}	3.26	1.57×10^{2}					
Space	1-J-1	4.09	9.10	2.91×10^{8}	1.69	2.33×10^{2}	30	4.2	0.2	25.0	220
	1-J-2	4.90	2.84×10^{1}	1.35×10^{8}	3.80	1.97×10^{2}					
	1-J-3	4.49	2.53×10^{1}	2.02×10^{8}	4.00	2.54×10^{2}					
Space	2-C-1	7.61	4.46×10^{1}	1.61×10^{7}	2.10	7.34×10^{1}	231	1.2	0.9	31.0	170
	2-C-2	5.45		4.31×10^{7}	12.79	1.18×10^{2}					
	2-C-3	5.71	3.18×10^{1}	5.10×10^{7}	2.80	1.34×10^{2}					
Space	3-C-1	4.51	2.02×10^{1}	6.86×10^{7}	1.52	9.59×10^{1}	23	1.2	0.6	29.0	1370
	3-C-2	7.42		1.59×10^{7}	32.82	1.24×10^{2}					
	3-C-3	3.97	8.81×10^{1}	4.20×10^{7}	3.76	9.07×10^{1}					
Space	4-C-1	3.97	8.15	5.91×10^{7}	0.25	3.98×10^{1}	272	1.2	0.6	22.0	1310
	4-C-2	1.01×10^{1}	4.46×10^{1}	2.22×10^{7}	6.13	1.81×10^{2}					
	4-C-3	5.83	3.99×10^{1}	3.68×10^{7}	4.17	1.35×10^{2}					
Space	4-J-2	5.21	4.46×10^{1}	3.07×10^{7}	2.35	8.55×10^{1}	272	4.1	0.5	26.0	1250
	4-J-3	4.29	4.46×10^{1}	5.33×10^{7}	4.52	1.33×10^{2}					
GB 1	1-A-1	4.04	4.65	2.65×10^{8}	0.60	1.48×10^{2}	30	1.1	0.2	42	
	1-A-2	3.56	3.70	2.24×10^{8}	0.60	1.90×10^{2}					
	1-A-3	2.91	2.95	3.75×10^{8}	0.28	1.05×10^{2}					
GB 1	1-G-1	4.45	9.10	2.07×10^{8}	1.29	1.81×10^{2}	30	4.2	0.2	21	
	1-G-2	4.25	1.02×10^{1}	2.19×10^{8}	1.33	1.75×10^{2}					
	1-G-3	4.05	8.15	1.57×10^{8}	0.66	1.09×10^{2}					
GB 1	2-A-1	3.58	5.20	1.48×10^{8}	0.31	7.23×10^{1}	231	1.1	0.9	14	
	2-A-2	4.41	1.29×10^{1}	6.30×10^{7}	0.60	6.24×10^{1}					
	2-A-3	4.70	8.15	8.80×10^{7}	0.51	8.01×10^{1}					

*All specimens were 1-cm long.

ORIGINAL PAGE IS
OF POOR QUALITY

TABLE III -- continued

Processing	Specimen Number	Mean Cell Size (μ)	Median Cell Size (μ) Volume	Cell Count/cm^3	Cell Volume Fraction (%)	Cell Specific Surface Area (cm^2/cm^3)	Content (ppm)	Width* (mm)	Thickness* (mm)	Melting Point (sec)	Cooling Rate through Melting Point (^{0}C/sec)
GB 1	3-A-1	5.65	2.53×10^{1}	8.92×10^{7}	3.62	1.93×10^{2}	23	1.1	0.6	8	
	3-A-2	5.80	3.18×10^{1}	9.90×10^{7}	4.42	2.15×10^{2}					
	3-A-3	3.77	1.15×10^{1}	7.00×10^{7}	0.32	4.37×10^{1}					
GB 1	4-A-1	3.88	3.56×10^{1}	6.77×10^{8}	6.77	5.03×10^{2}	272	1.1	0.6	24	
	4-A-2	4.30	7.87×10^{1}	5.20×10^{8}	16.37	5.89×10^{2}					
	4-A-3	2.95	3.70	1.16×10^{8}	0.11	3.51×10^{1}					
GB 1	4-G-1	5.82	2.02×10^{1}	2.12×10^{8}	5.18	3.83×10^{2}	272	4.0	0.6	21	
	4-G-2	5.68	9.10	2.29×10^{8}	2.11	2.96×10^{2}					
	4-G-3	6.41	1.44×10^{1}	2.54×10^{8}	4.51	4.23×10^{2}					
GB 2	1-B-1	4.44	7.30	2.55×10^{8}	1.15	1.99×10^{2}	30	1.1	0.2		
	1-B-2	3.19	4.15	2.30×10^{8}	0.32	8.45×10^{1}					
	1-B-3	3.67	4.65	2.27×10^{8}	0.44	1.11×10^{2}					
GB 2	1-H-1	3.52	4.65	1.40×10^{8}	0.24	6.28×10^{1}	30	4.2	0.2		
	1-H-2	3.46	4.65	2.17×10^{8}	0.41	9.58×10^{1}					
	1-H-3	5.34	1.02×10^{1}	1.36×10^{8}	1.38	1.73×10^{2}					
GB 2	2-B-1	5.38	7.87×10^{1}	2.25×10^{8}	17.28	4.50×10^{2}	231	1.1	0.9		
	2-B-2	4.46	6.27×10^{1}	5.75×10^{8}	8.93	5.53×10^{2}					
	2-B-3	3.98	2.02×10^{1}	1.05×10^{9}	6.67	7.29×10^{2}					
GB 2	3-B-1	5.48	9.10	4.11×10^{8}	3.54	4.95×10^{2}	23	1.2	0.6		
	3-B-2	5.15	7.30	3.61×10^{8}	2.26	3.68×10^{2}					
	3-B-3	4.24	5.20	2.51×10^{8}	0.66	1.56×10^{2}					
GB 2	4-B-1	3.67	5.80	1.58×10^{8}	0.37	7.96×10^{1}	272	1.1	0.6		
	4-B-2	4.46	9.10	1.31×10^{8}	0.74	1.08×10^{2}					
	4-B-3	4.14	1.02×10^{1}	1.13×10^{8}	0.65	8.41×10^{1}					
GB 2	4-H-1	5.08	1.29×10^{1}	2.66×10^{8}	2.81	3.12×10^{2}	272	4.0	0.6		
	4-H-2	5.03	3.18×10^{1}	1.85×10^{8}	4.84	2.84×10^{2}					
	4-H-3	4.87	3.99×10^{1}	1.69×10^{8}	4.88	2.49×10^{2}					

*All specimens were 1-cm long.

TABLE IV. Qualitative Observations on Foam Specimens
Space Processed Specimens

Specimen No.	Cell Volume	Deformation	TC Contact Maintained?
1-D	Sampling apparently very good except for 2 large coalescence areas.	Very little sample deformation observed.	No
1-J	Sampling did not count area with highest density of large cells (rt of 1-J-2) or large tear or coalescence areas (resulting from deformation?)	Sample elongation and resulting tearing, possibly due to mechanical recovery in the supporting TC wires.	Yes
2-C	Sampling did not count area with highest density of large cells (left of 2-C-2) or large coalescence areas. Overall sample cell volume fraction probably 20-25%.	Very little deformation. Sample bending possibly occurred during quench as sample was detached from support and TC wires.	No
3-C	Sampling did not count areas of highest cell density. Areas with about 5 times more porosity were present. Only 1 large coalescence area was present and it was counted.	Very little sample deformation evident.	Yes
4-C	All typical areas sampled well. Sample very uniform with no large coalescence areas.	Very little sample deformation evident.	No
4-J	Sampling fairly good but did not count large coalescence areas. Overall sample cell volume fraction probably 15-20%.	Sample elongation and thickening to one end, probably due to quench.	No

TABLE IV. Qualitative Observations on Foam Specimens
GB 1 Specimens -- continued

Specimen No.	Cell Volume	Deformation	TC Contact Maintained?
1-A	Sampling apparently very good.	Extensive elongation apparent.	Yes
1-G	Sampling very good. No large coalescence areas were present.	Very extensive sample elongation, appearance of "running" or fluid flow.	No
2-A	Sampling good but one very large coalescence area (cell) formed as did several smaller ones. These were not counted. Overall sample cell volume fraction was probably 20-25%.	Very little plastic flow was evident but a very extensive oxide or corrosion product film was observed on the sample. This film probably limited fluid flow.	Yes
3-A	Sampling was good but did not count the many large coalescence areas. Sample cell volume fraction was probably 15-20%.	Very little sample elongation was observed.	Yes
4-A	Sampling was good but the sample had only melted on one end.	Sample flow was extensive on the end that melted. Breakup (mechanical) of the heavy corrosion product film was evident.	Yes
4-G	Sampling was very good with no large coalescence areas observed.	Flow was very extensive with nearly all of the sample material accumulating at the bottom support wire.	Yes

TABLE IV. Qualitative Observations on Foam Specimens
GB 2 Specimens -- continued

Specimen No.	Cell Volume	Deformation	TC Contact Maintained?
1-B	Sampling good but did not count large coalescence areas. Overall sample cell volume fraction probably 20-25%.	Extensive elongation apparent.	Yes
1-H	Sampling very good but one very large coalescence area (cell) formed so that overall sample cell volume was probably 60-70%.	Extensive fluid flow bordering on droplet formation.	No
2-B	Sampling was very good. No large coalescence areas were observed.	Very little plastic flow was evident, again probably a result of the very heavy corrosion product film.	Yes
3-B	Sampling was very good. No large coalescence areas were observed.	Sample bent and sagged severely.	Yes
4-B	Sampling was good except that a large coalescence area (cell) was not counted. This cell was 20-25% of the sample volume.	The center of the sample formed a droplet and fell off the support wires. The large cell was formed in this piece.	No
4-H	Sampling was very good with only one large coalescence area forming (not counted).	Flow was similar to that observed in 4-G. However, the sample separated in the middle (tearing) during the quench.	Yes

Mexico. Due to delays in the White Sands testing schedule, the TCU was made available for refurbishment on December 5. At this time the furnace was refurbished and the flight samples were installed.

The flight experiment was flown on December 11. The TCU and electronic packages were shipped by MSFC personnel and arrived at BNW on December 16. The TCU was immediately disassembled and examined. The water quench had operated, heating element operation seemed to have been normal, all samples remained in their quartz capsules and appeared to have melted and foamed, and the thermocouples appeared to have remained intact throughout the experiment. It was tentatively concluded that the experiment was a success, provided that suitable time-temperature data had been transmitted to the ground facility and recorded.

The flight samples were analyzed in the same manner as the ground-based tested samples and preliminary results were presented during a review meeting at MSFC on January 5 and 6. Statistical and metallographic data were left with project personnel at MSFC to aid in demonstration of the success of the SPAR I experiment and to indicate feasibility of metal foam production.

An informal Post-Flight Preliminary Report in the form of a letter to Roger Chassay was written on January 21, 1976. This report briefly documented the results presented at the January 5-6 MSFC meeting, and was reproduced in the previous report.

Note that although the raw thermocouple voltage data from SPAR Flight #1 were available to examine at the January 5-6 MSFC meeting, detailed time-temperature and time-voltage data were not available for examination until February 20, 1976, seven days before the scheduled Comprehensive Review Meeting at MSFC on March 5, 1976 and more than two months after the flight. Furthermore, this data revealed that drift had occurred in the thermocouple amplifiers before the flight so that a new zero-point had to be determined for each thermocouple system and all data received from MSFC had to be adjusted to compensate for these values. Corrections to the time-temperature data from the flight were completed on March 8, permitting final analysis of flight data to begin.

Ground-Based Testing prior to SPAR Flight #2

Modification of the second TCU furnace was completed in January 1976. During February 1976, modifications to both TCUs were completed, construction of control electronics was completed, and all components were trial assembled (including components for the flight experiments on SPAR 2) and satisfactory functioning was verified. Both TCUs were assembled with dummy samples, packaged, and shipped along with their control electronics to MSFC for systems tests.

Also during February, a set of Test Specifications and Requirements for SPAR Payload II, Experiment 74-10, was prepared and sent to B.T. Ondrak and R. Ruff, MSFC. These specifications and the attendant cover letter are included in Appendix II.

A procedure for refurbishing the TCUs was prepared and sent to Rudy Ruff, MSFC, who provided support at MSFC by following all equipment tests and repairing/refurbishing as required. This procedure is included in Appendix III.

NASA functional testing and verification of TCU-electronics system operation was completed at MSFC with the following problems being encountered:

1) Low readings from the thermocouple amplifier outputs resulting from too low impedence of NASA chart recorder.
2) Power relay cycling after the quench resulting from NASA substituting a solenoid with too high resistance.
3) Power relay cycling immediately after application of power resulting from NASA g-switch not being connected.
4) Observed time-at-temperature too long on 74-10/3 resulting from Battelle changing time-at-temperature setting and not informing NASA.

The TCU electronics control packages were then returned to BNW by NASA/MSFC. The soak temperature set-points were adjusted in both units and triggering of the water quench solenoid was set. All thermocouple amplifiers were calibrated.

Ground-based testing preliminary to SPAR II was completed at NASA/MSFC with Rudy Ruff accomplishing all associated TCU refurbishment, specimen installation, etc. No specimens or time-temperature results were immediately sent to BNW,

however, so that adequate information concerning equipment performance was acquired prior to SPAR Flight #2 but no information as to material (experiment sample) behavior was available.

SPAR Flight #2

On May 11 - May 12 the PI and Rudy Ruff (MSFC) refurbished both TCUs at White Sands Missile Range, New Mexico. Also at this time flight components and experiment samples were installed in the TCUs and resistance tests were conducted to assure correct experiment assembly.

On May 18 Rudy Ruff delivered the two TCUs (after SPAR Flight #2) and related ground-based test specimens to the PI at Richland, Washington.

On May 19, the PI removed the flight samples and heater components from the two TCUs, returned the TCUs and electronic control packages to Rudy Ruff for transport to MSFC, and initiated evaluation of the SPAR Flight #2 specimens.

ANALYSIS OF RESULTS AND DISCUSSION - SPAR I

Ground-Based Tests

Metallography from 12 ground-based tested samples was included in the Post-Flight Technical Report, SPAR Flight #1. Table III summarizes data recorded during analysis of these specimens, and Table IV contains qualitative observations on the foamed specimens.

Approximate times above the melting point for GB-1 samples were estimated from recording pen traces and thermal

arrests. Computer-processed data were not received from NASA/MSFC until June 28, 1976. However, this data did not differ significantly from the estimates and so is not included here.

No times above the melting point for GB-2 samples were included in Table IV because no data were recorded at NASA/MSFC for this test.

In general, results of GB-1 and GB-2 testing showed gross sample flow and separation from thermocouples during testing due to the effects of gravity. It was concluded from these tests that ground based testing prior to Spar Flight #2 would serve to verify satisfactory experiment operations from an equipment standpoint, but little insight into foam behavior could be expected. That is, it was concluded that all kinetic information would have to be provided by zero-gravity processed samples.

SPAR Flight #1

Metallography from the six SPAR Flight #1 samples was also included in the Post Flight Technical Report, SPAR Flight #1. Again, Table III summarizes sample sizes, processing methods, time above the melting point (if available), cooling rate through the melting point, trapped argon content, and cell size and distribution statistics.

Table IV contains qualitative observations on the foamed specimens.

Note that times at which melting occurred on heating for space processed samples were taken as the beginning of

thermal arrests observed in the time-termperature data. Each of these thermal arrests occurred within a few degrees of the published 660°C melting point of aluminum. Times at which solidification occurred were taken as the times when the samples cooled through 660°C. Cooling rates here were very rapid so very little time error was involved with this measurement. Cooling rates from each sample (temperature was measured each 0.1 sec) are listed in Table III. Accuracy in the estimated times above the melting point (Table III) for space-processed samples was judged to be ± 1 sec. Heating rate was approximately 10°C/sec.

It was concluded that gas content variations up to 250 ppm were not as strongly influential on foaming behavior as expected. This may have been clouded by the difficulty in counting large pores in the quantitative analysis, by the very strong (positive) influence on cell volume fraction of a few large cells, and by the weak (negative) influence on pore specific surface area of a few large cells. It was further concluded that these effects could be more effectively treated in samples of much greater sample thickness so that thicker samples were scheduled for experiments on SPAR Flight #2.

Trends were observed toward fewer cells/unit volume, less scatter in the number of cells/unit volume, and a larger median cell size in space processed samples than in ground based samples. No trends were observed in mean cell size or scatter in mean cell size. More speculation concerning

these data, however, was deferred pending availability of reliable time-temperature data for the bround based tested samples.

As mentioned above, the accurate time-temperature data for GB-1 samples did not, however, significantly alter estimates of the time-temperature data and therefore did not provide additional information on foam behavior. It was also concluded that formation of a corrosion product scale (in spite of a flushed nitrogen atmosphere) on the samples and the resulting nonuniform constraints on sample movement during foam development, combined with the small sample thickness (on the order of bubble dimensions) presented the most significant obstacles to analysis of results. Largely because of these effects, each sample was used completely for metallographic examinations and no mechanical testing was conducted. However, it was felt that the above information, particularly that included in Table III, provided very good characterization of SPAR Flight #1 samples for comparison with SPAR Flight #2 samples (processed for two longer times above the melting point) to obtain kinetic data. Further, it was felt that larger samples on SPAR Flight #2 would reduce the effects of surface area, oxide scale, and dominance by a few large cells.

ANALYSIS OF RESULTS AND DISCUSSION - SPAR II

Ground-Based Tests

Representative metallography from Experiments 74-10/2 and 74-10/3 is included in Figures 1 and 2. All specimens in these ground-based tests experienced much more surface

oxidation than did the specimens tested prior to SPAR I so that there was much less metal flow in the samples while they were molten. The restraining forces may also have been the cause of the complete absence of large bubbles. The resulting microstructures typically showed very uniform distribution of small bubbles. The specimens in Experiment 74-10/2 were above the melting point for ~ 85 sec and the specimens in Experiment 74-10/3 were above the melting point for ~ 160 sec, as in the actual flight experiments (Table V). The effect of the increased time above the melting point is clearly evident in the bubble distribution in Figures 1 and 2 with longer time producing larger and fewer bubbles. Further investigation might, in fact, demonstrate that foam formation with uniform mechanical constraint (to prevent large void formation) and a zero-gravity environment (to prevent "boiling", or a density driven bubble segregation, in large sections) is the most effective way to fabricate metallic foam shapes. Because of this strong (and poorly understood) restraint of the oxide scale, however, no detailed analysis of the foam structure was attempted.

SPAR FLIGHT #2

Results for the two experiments conducted on SPAR Flight #2 are included in Table V. Note that specimens in Experiment 74-10/2 were molten (above 660°C) for approximately 85 sec., and specimens in Experiment 74-10/3 were molten for approximately 160 sec.

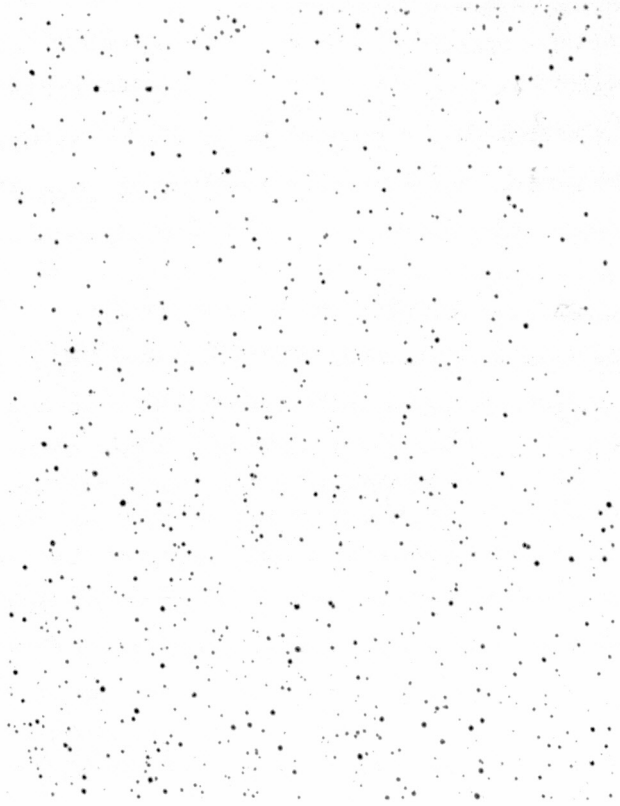

Deposit NASA #2

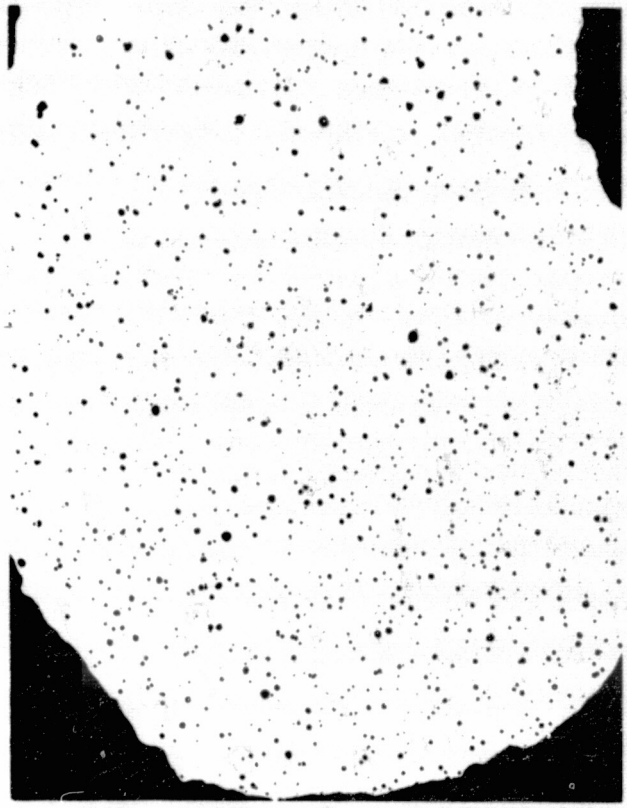

Deposit NASA #4

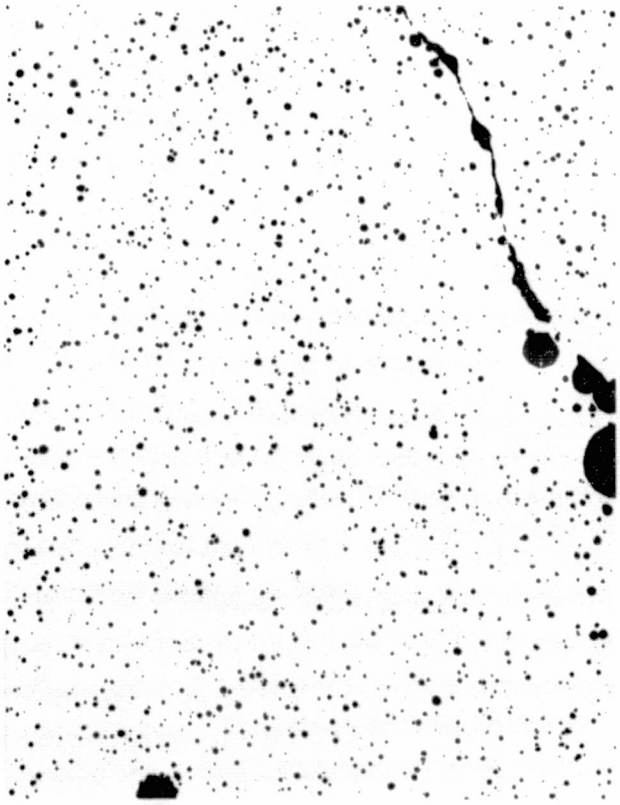

Deposit NASA #5

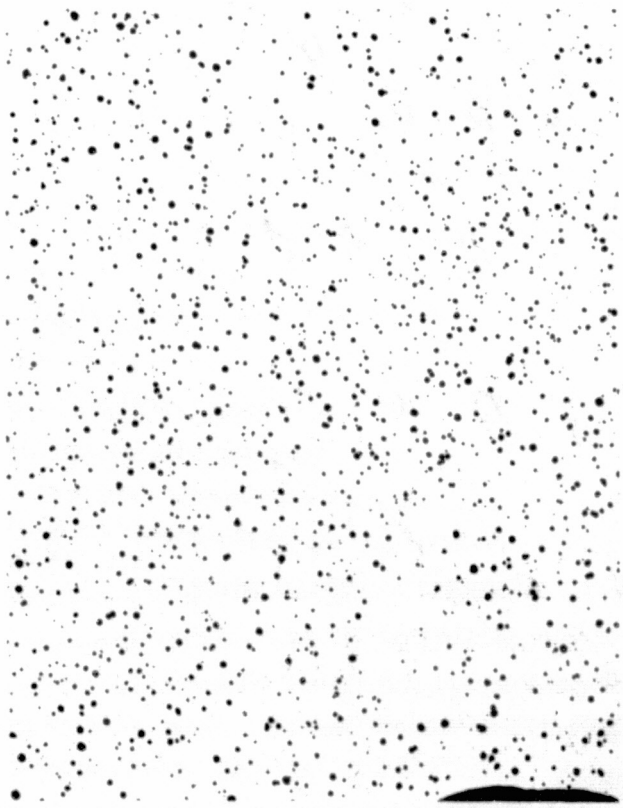

Deposit NASA #5

FIGURE 1. Specimens from Experiment 74-10/2. Samples of Deposit NASA #1 and Deposit NASA #3 were Fragmented too Badly to Examine. As-Polished, 50X

ORIGINAL PAGE IS
OF POOR QUALITY

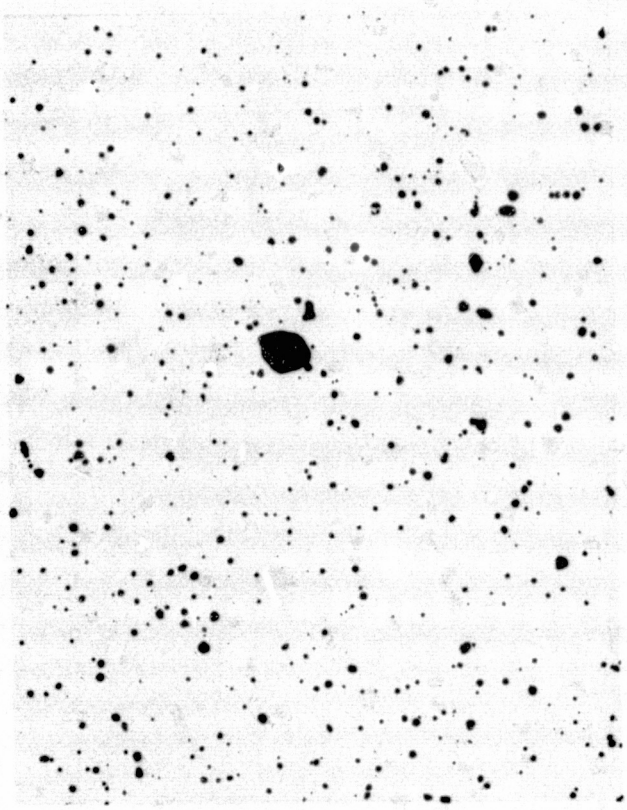

Deposit NASA #2

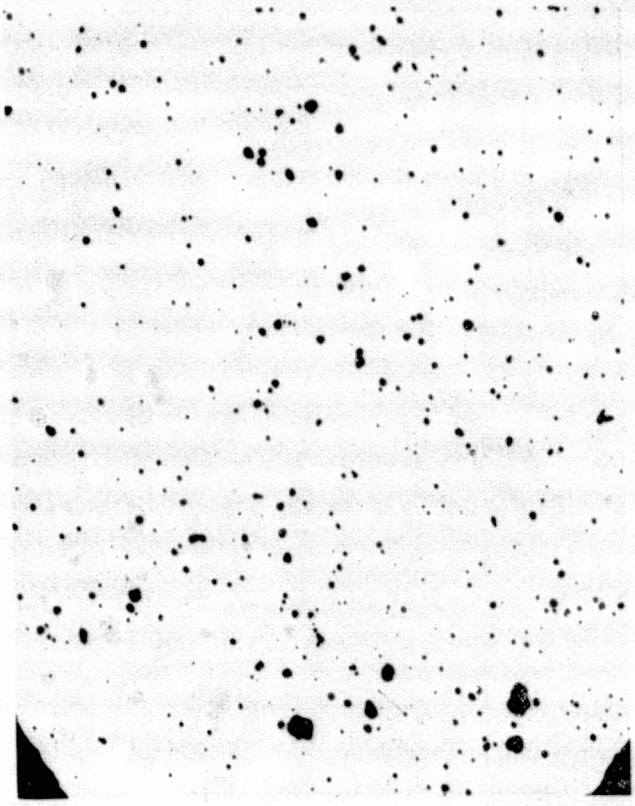

Deposit NASA #4

Deposit NASA #5

Deposit NASA #5

FIGURE 2. Specimens from Experiment 74-10/3. Samples of Deposit NASA #1 and Deposit NASA #3 were Fragmented too Badly to Examine. As-Polished, 50X

ORIGINAL PAGE IS
OF POOR QUALITY

ORIGINAL PAGE IS OF POOR QUALITY

TABLE V. Observations from SPAR Flight #2

Specimen No.	Comments	Time After Launch (sec to heat to 660°C↑)	Time After Launch (sec to cool) to 660°C↓)	Time Above 660°C Δt (sec)	Ar Content (ppm)
Experiment 74-10/2					
1(1-F)	No metallography, specimen detached from thermocouple and support wires and lost.	158.9	253.8	94.9	30
2(2-H)	Specimen fragmented, only a small part attached to the support wire was recovered.	174.4	254.1	79.7	231
3(3-H)	Specimen detached from thermocouple and support wires, two pieces recovered.	173.1	254.6	81.5	23
4(4-E)	No metallography, specimen detached from thermocouple and support wires and lost.	173.7	254.5	80.8	272
5(T-C)*	Specimen remained attached to thermocouple and support wires.	165.4	254.9	89.5	24
6(T-D)*	Specimen detached from thermocouple and support wires, flowed out through a water hole in one end plate while still molten.	172.3	254.4	82.1	24
7 (Furnace)		183.2	~257.5	74.3	
Experiment 74-10/3					
1(1-E)	Detached thermocouple wire, specimen remained in sample tube.	178.5	333.8	155.3	30
2(2-G)	Detached thermocouple wire, specimen remained in sample tube.	175.6	333.9	158.3	231
3(3-G)	Specimen remained attached to thermocouple and support wires.	175.9	333.7	157.8	23
4(4-D)	No metallography, specimen fragmented, two pieces were recovered.	167.5	333.9	166.4	272
5(T-A)*	Specimen remained attached to thermocouple and support wires.	156.3	334.1	177.8	24
6(T-B)*	Specimen remained attached to thermocouple and support wires.	No reading - large pulse @ 198 sec.			24
7 (Furnace)		191.3	~336.0	144.7	

*All "T" specimens were sectioned from Experiment NASA #5, see Table II.

No metallographic examinations were conducted on specimens 1-F, 4-E, and 4-D because sufficient specimen material was not recovered after the experiment. Metallography on the remaining nine specimens is included in Figures 3 through 7. Note that the curved "T" samples usually did not maintain their curved shape well (see Figure 6). This was attributed to the irregular mechanical restraint provided to the expanding foam by an adherent fracturing oxide film. Evidence of this may be observed in the low magnification macrographs included in the figures and in the irregular surfaces of the metallographic cross-section.

There is an extensive literature concerning the mechanisms and kinetics of inert gas bubble formation, movement, and growth in metals, particularly in the solid state near the melting point.[9-31] It was intended that this information be applied to the analysis of the Ar-Al foams. However, it is felt that the restraining effects of the oxide film would invalidate any conclusions of such an analysis.

If analysis of the ground-based tests results had been possible before SPAR II then the extent of this oxide layer effect would have been better understood and samples of sufficient thickness would have been used exclusively for the SPAR II experiments so that more useful data would have been accumulated and a better understanding of the effects of gas content and time above the melting point (2 times) would have been gained.

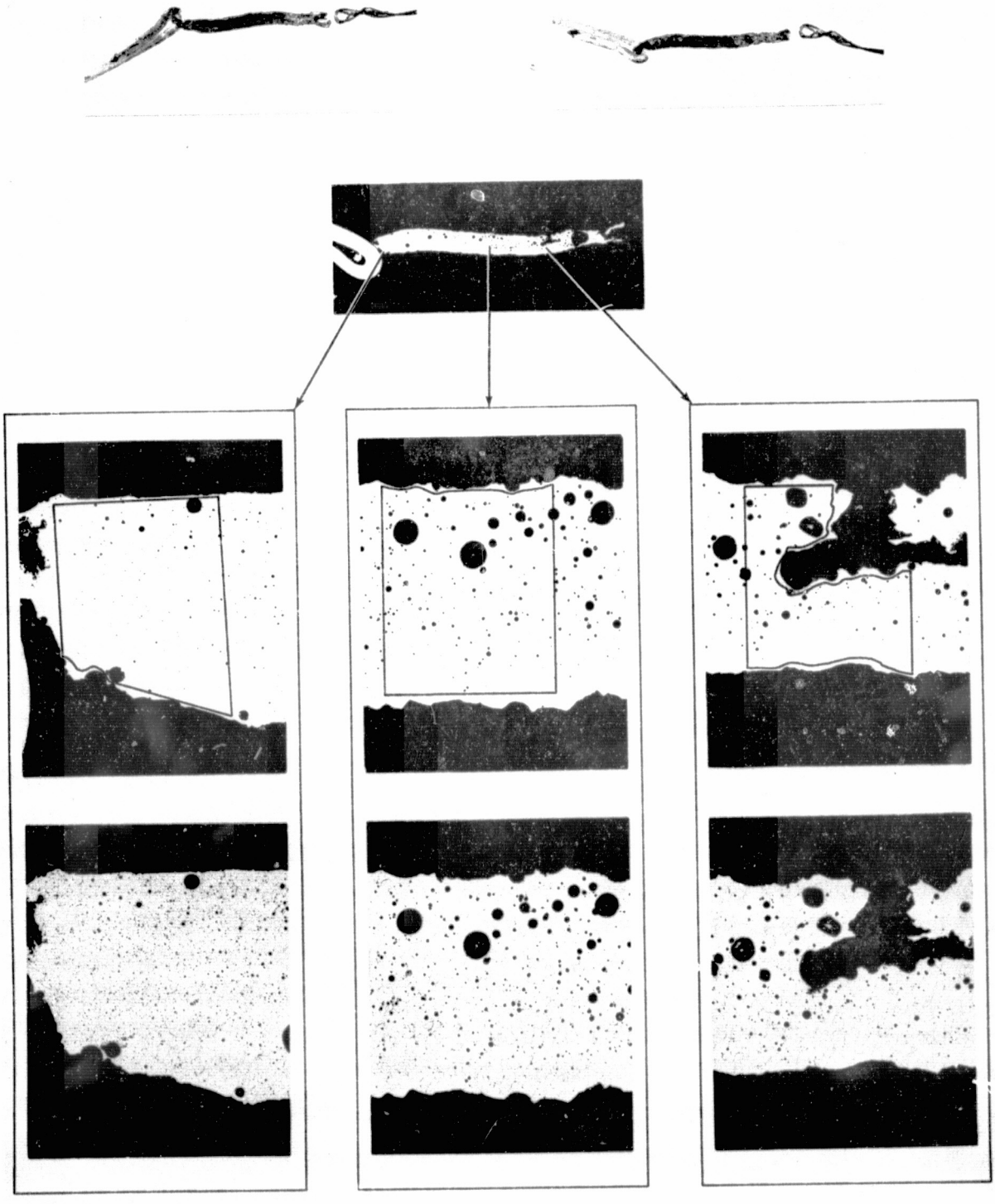

FIGURE 3a. Specimen 1-D, SPAR 1, ~ 30 sec above 660°C. The top two photos are 3X magnification and show two views of the specimen with support wires at the left and thermocouple wires at the right. The next lower photo is 5X magnification and shows a cross-section of the specimen. The bottom six photos are 50X magnification and show as-polished (top 3) and etched (bottom 3) microstructures.

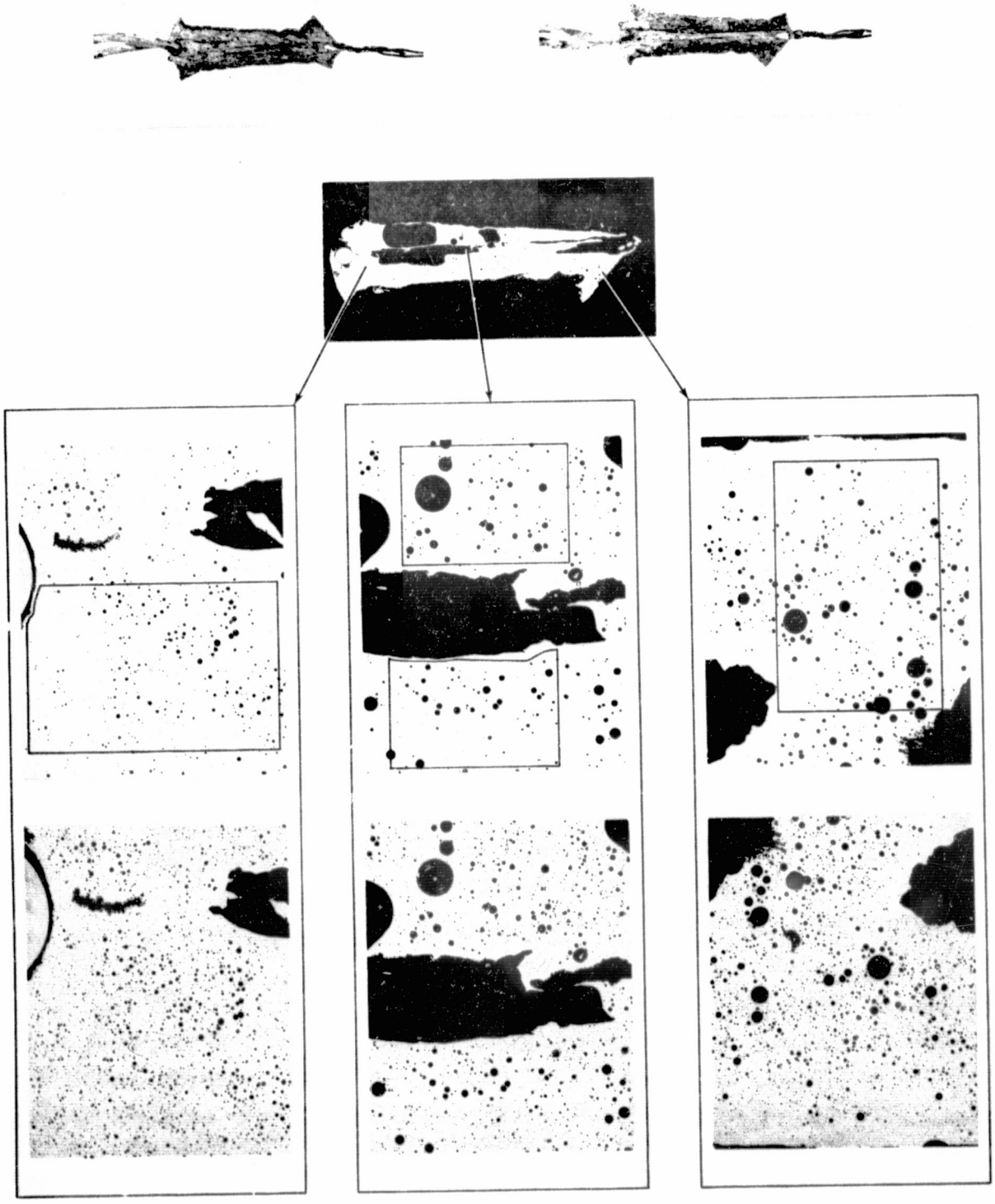

FIGURE 3b. Specimen 1-J, SPAR 1, ~ 30 sec above 660°C. The top two photos are 3X magnification and show two views of the specimen with support wires at the left and thermocouple wires at the right. The next lower photo is 5X magnification and shows a cross-section of the specimen. The bottom six photos are 50X magnification and show as-polished (top 3) and etched (bottom 3) microstructures.

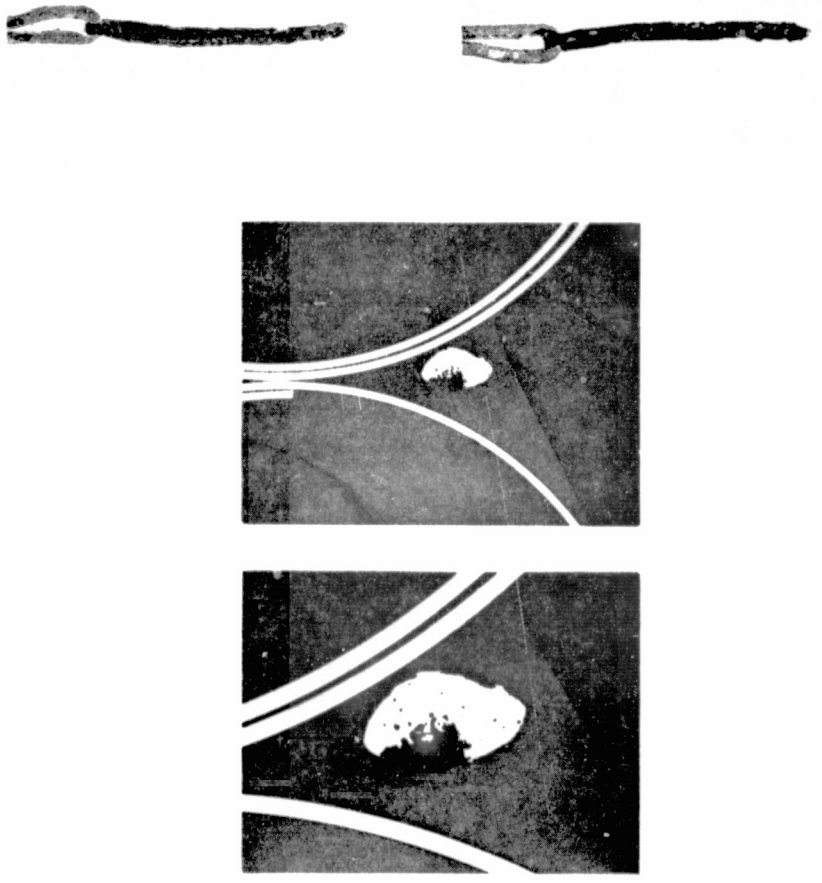

FIGURE 3c. Specimen 1-E, SPAR 2, 74-1/3, ~ 85 sec above 660°C. The top two photos are 3.5X magnification and show the specimen and its support wire (left). The center and bottom photos are 10X and 25X magnification (as-polished cross-section), respectively. The curved clips are used to hold specimens in place for metallographic mounting.

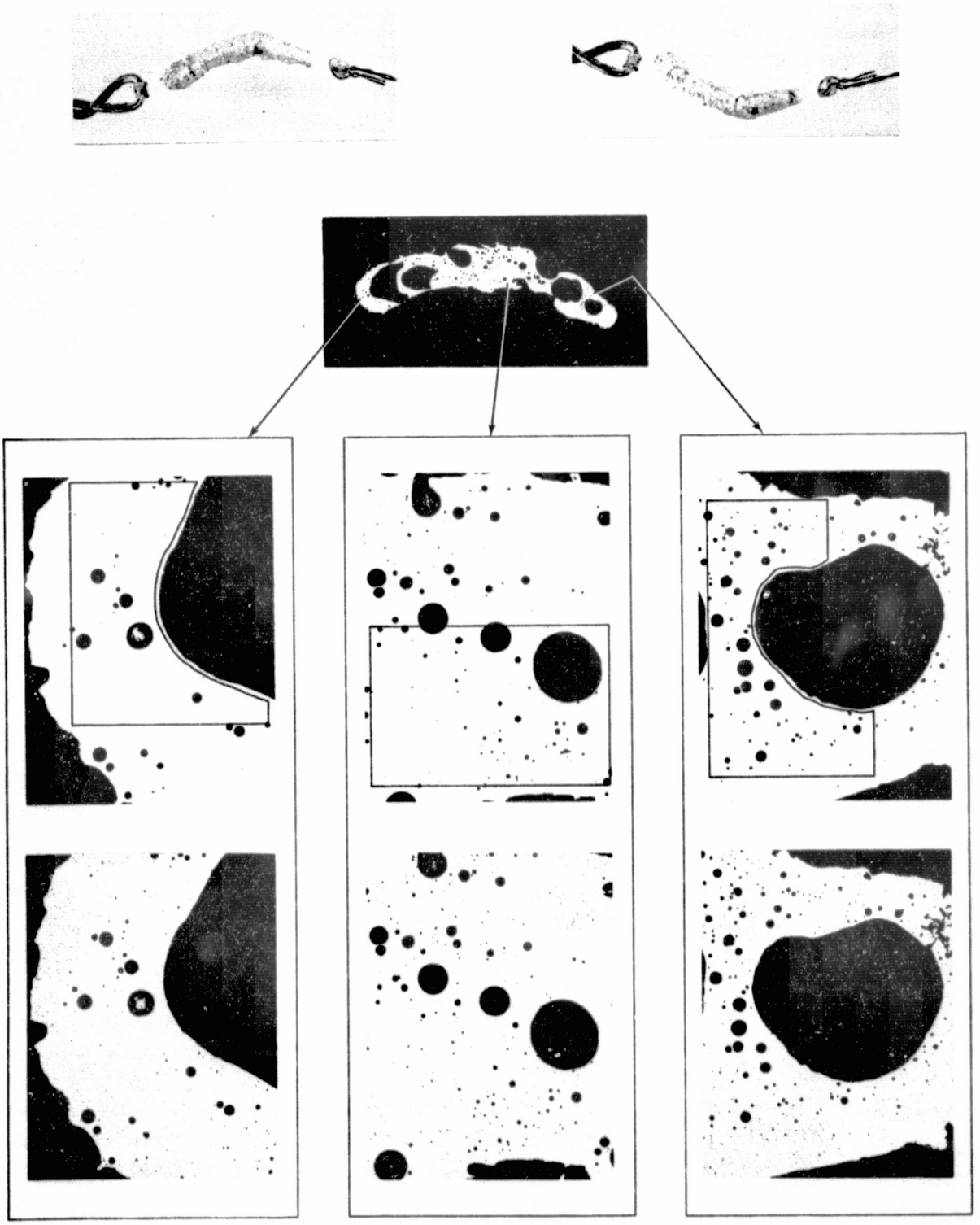

FIGURE 4a. Specimen 2-C, SPAR 1, ~ 30 sec above 660°C. The top two photos are 3X magnification and show two views of the specimen with support wires at the left and thermocouple wires at the right. The next lower photo is 5X magnification and shows a cross-section of the specimen. The bottom six photos are 50X magnification and show as-polished (top 3) and etched (bottom 3) microstructures.

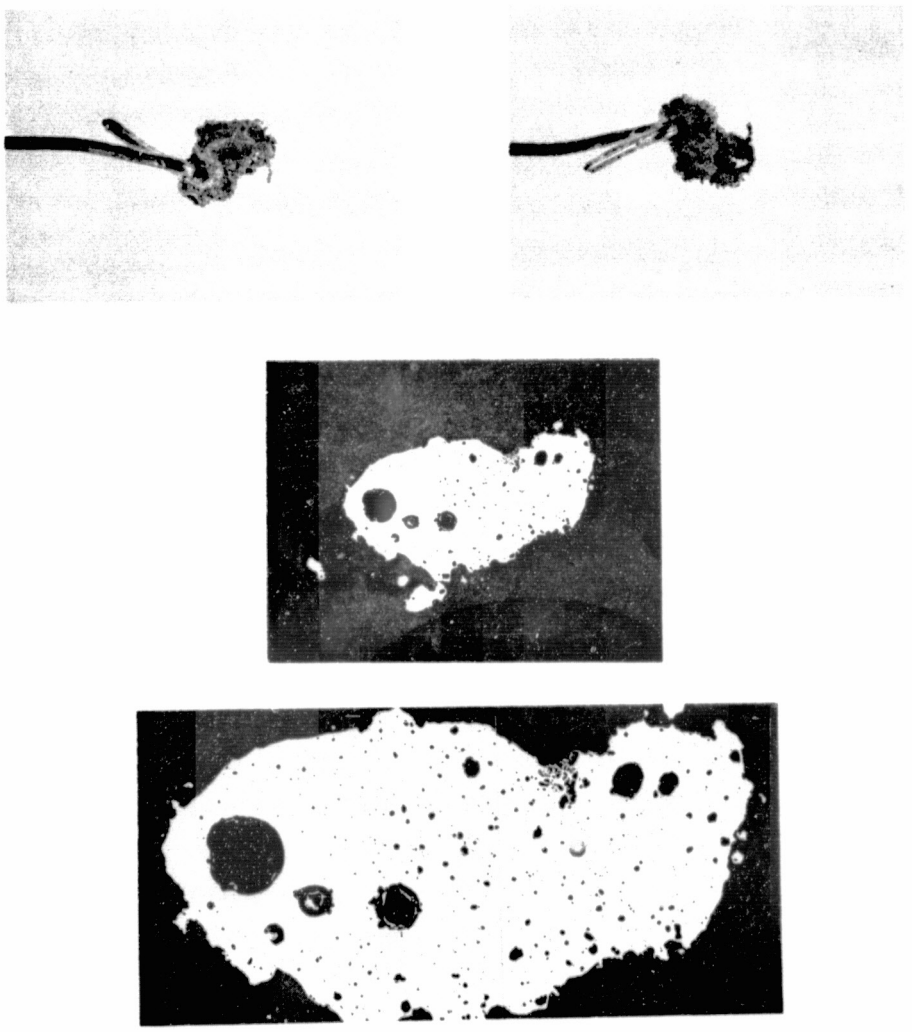

FIGURE 4b. Specimen 2-H, SPAR 2, 74-10/2, ~ 85 sec above 660°C. The top two photos are 3.5X magnification and show the specimen and its support wire (left). The center and bottom photos are 10X and 25X magnification (as-polished cross-section), respectively.

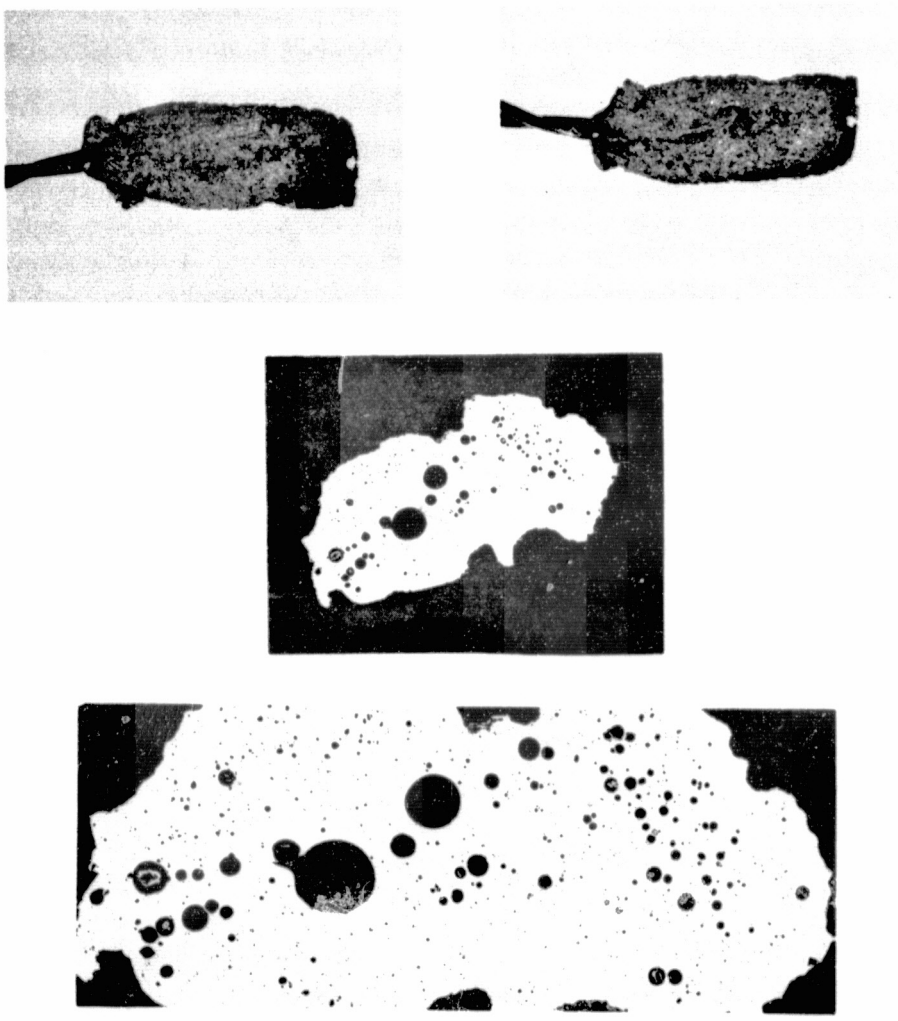

FIGURE 4c. Specimen 2-G, SPAR 2, 74-10/3, ~ 160 sec above 660°C. The top two photos are 3.5X magnification and show the specimen and its support wire (left). The center and bottom photos are 10X and 25X magnification (as-polished cross-section), respectively.

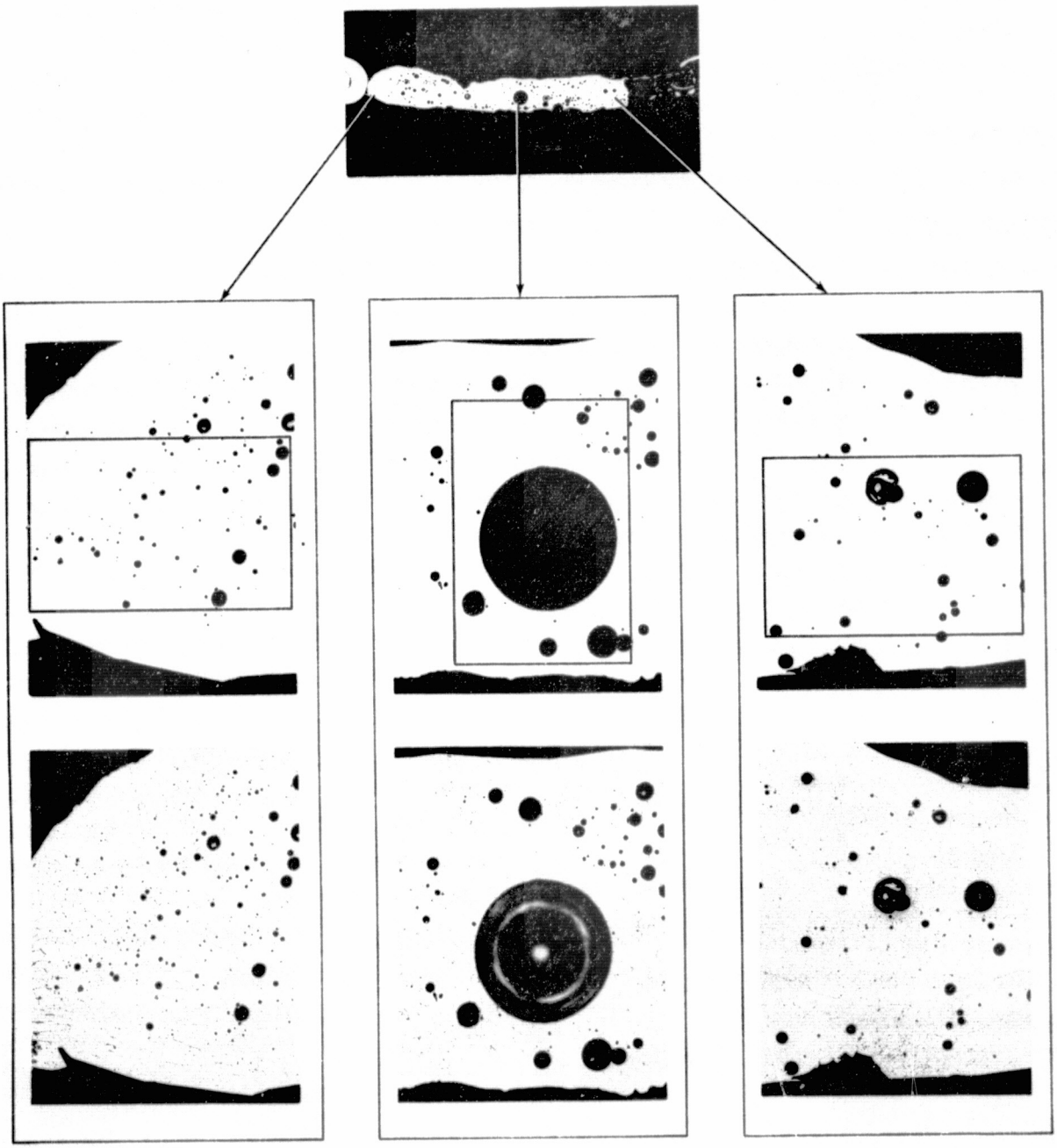

FIGURE 5a. Specimen 3-C, SPAR 1, ~ 30 sec above 660°C. The top two photos are 3X magnification and show two views of the specimen with support wires at the left and thermocouple wires at the right. The next lower photo is 5X magnification and shows a cross-section of the specimen. The bottom six photos are 50X magnification and show as-polished (top 3) and etched (bottom 3) microstructures.

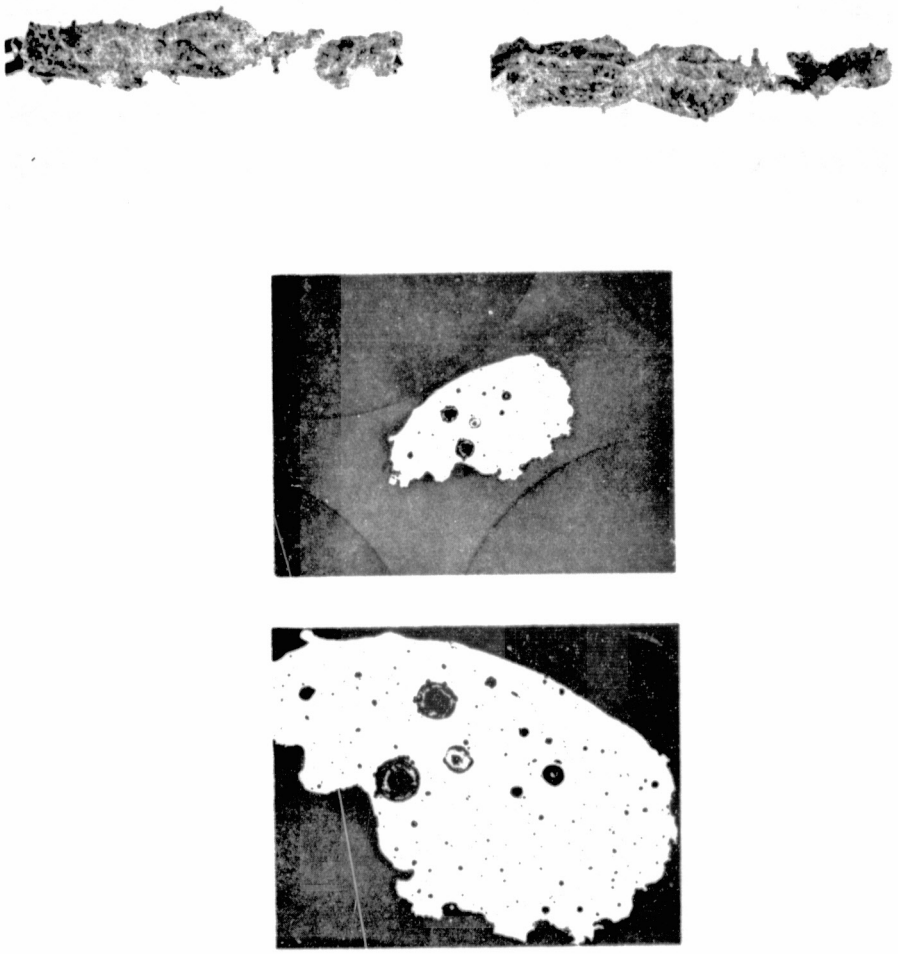

FIGURE 5b. Specimen 3-H, SPAR 2, 74-10/2, ~ 85 sec above 660°C. The top two photos are 3.5X magnification and show the specimen and its support wire (left). The center and bottom photos are 10X and 25X magnification (as-polished cross-section), respectively.

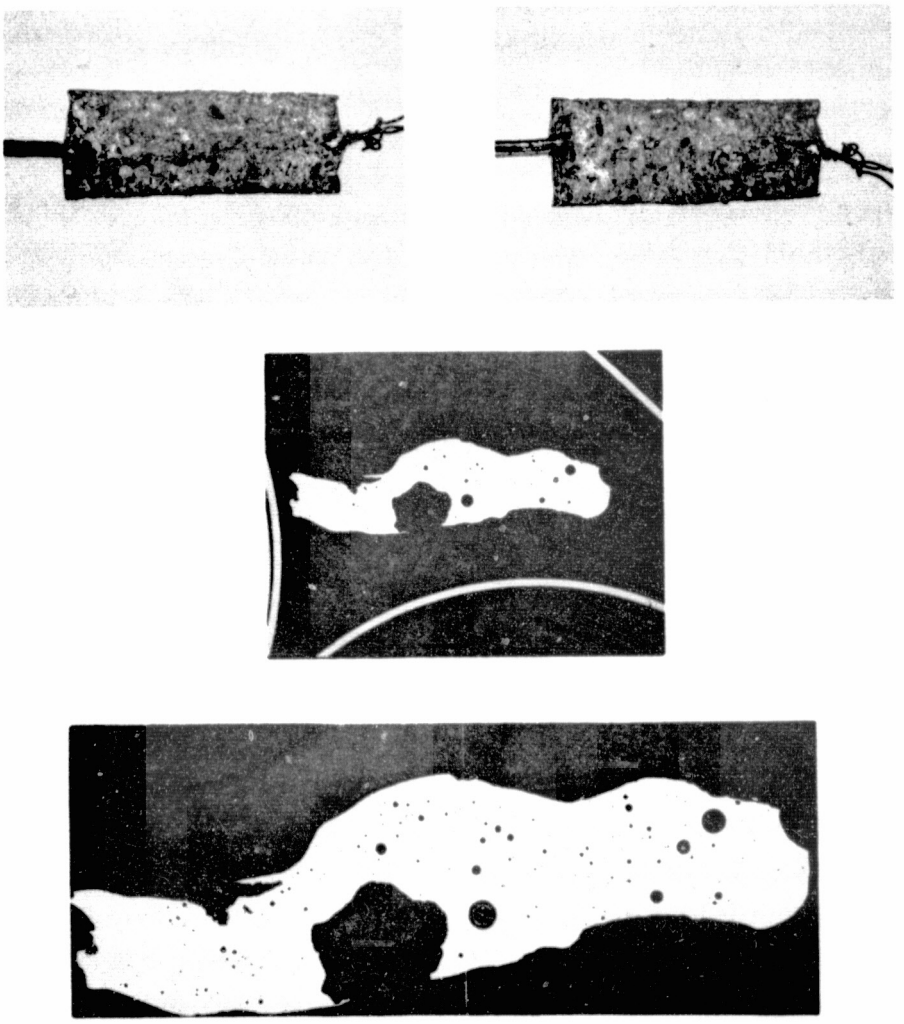

FIGURE 5c. Specimen 3-G, SPAR 2, 74-10/3, ~ 160 sec above 660°C. The top two photos are 3.5X magnification and show the specimen, its support wire (left), and the thermocouple (right). The center and bottom photos are 10X and 25X magnification (as-polished cross-section), respectively. The curved clips are used to hold specimens in place for metallographic mounting.

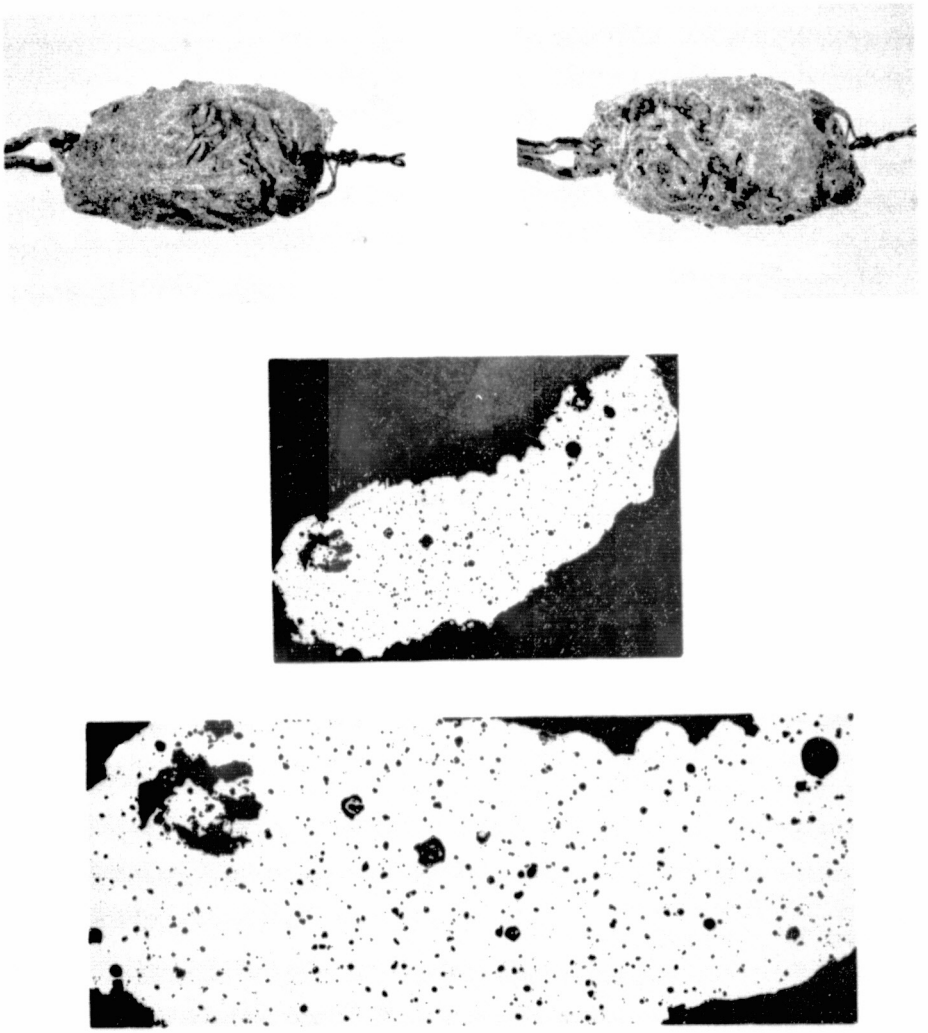

FIGURE 6a. Specimen T-C, SPAR 2, 74-10/2, ~ 85 sec above 660°C, Deposit NASA #5. The top four photos are 3.5X magnification and show the specimen, its support wire (left), and the thermocouple (right). The center and bottom photos are 10X and 25X magnification (as-polished cross-section), respectively.

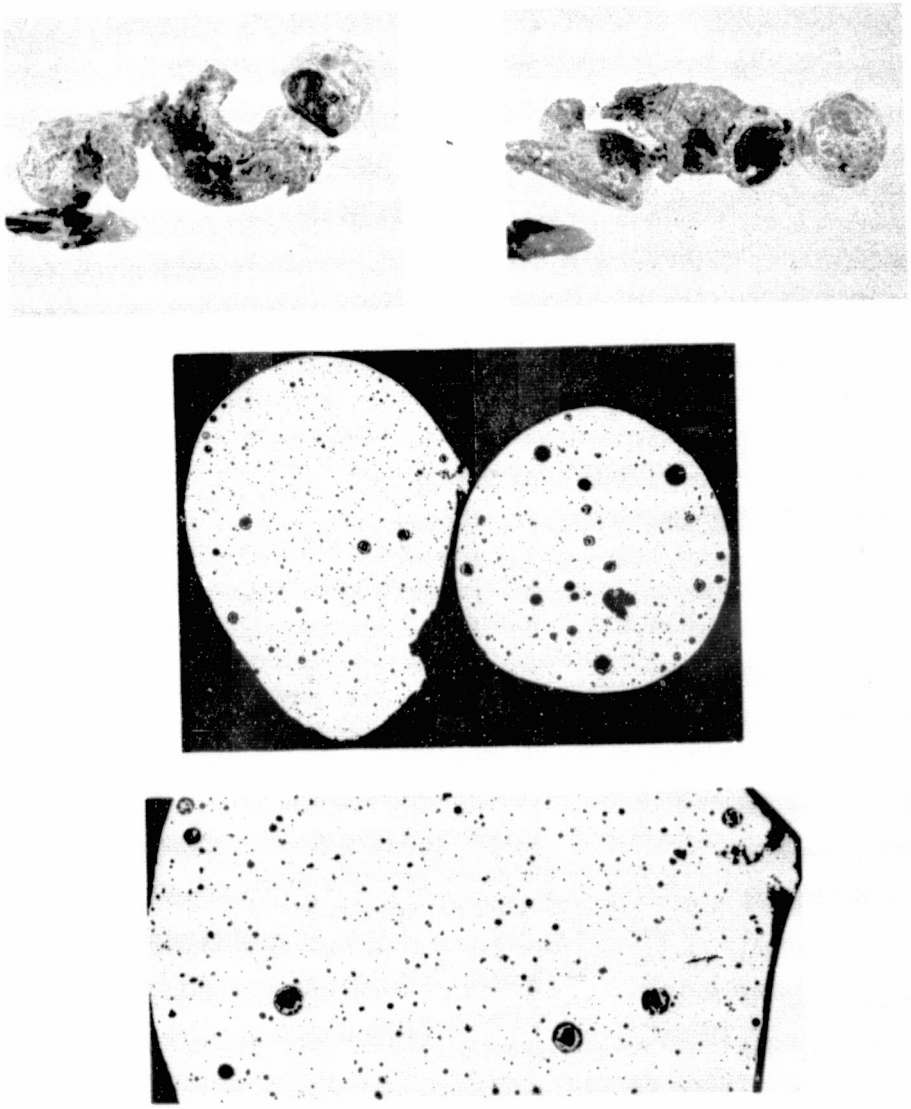

FIGURE 6b. Specimen T-D, SPAR 2, 74-10/2, ~ 85 sec above 660°C, Deposit NASA #5. The top four photos are 3.5X magnification and show the specimen, its support wire (left), and the thermocouple (right). The center and bottom photos are 10X and 25X magnification (as-polished cross-section), respectively.

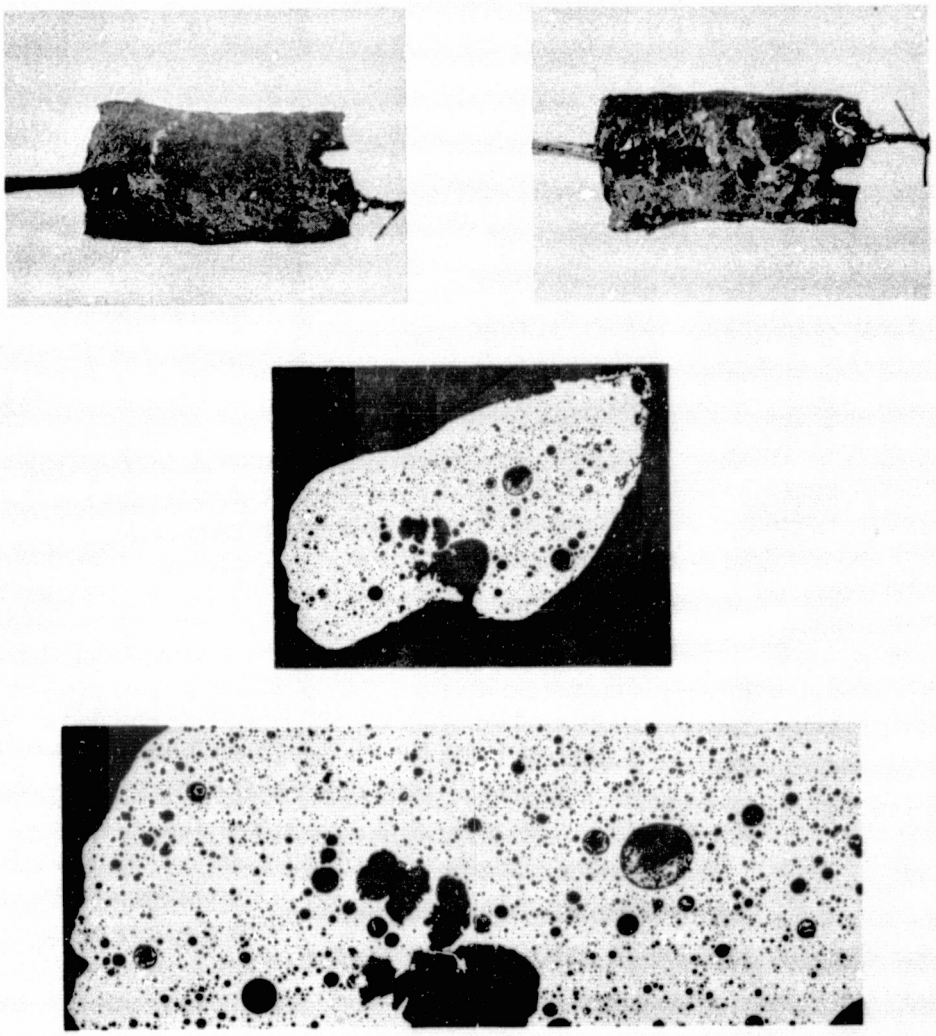

FIGURE 6c. Specimen T-A, SPAR 2, 74-10/3, ~ 160 sec above 660°C, Deposit NASA #5. The top two photos are 3.5X magnification and show the specimen, its support wire (left), and the thermocouple (right). The center and bottom photos are 10X and 25X magnification (as-polished cross-section), respectively.

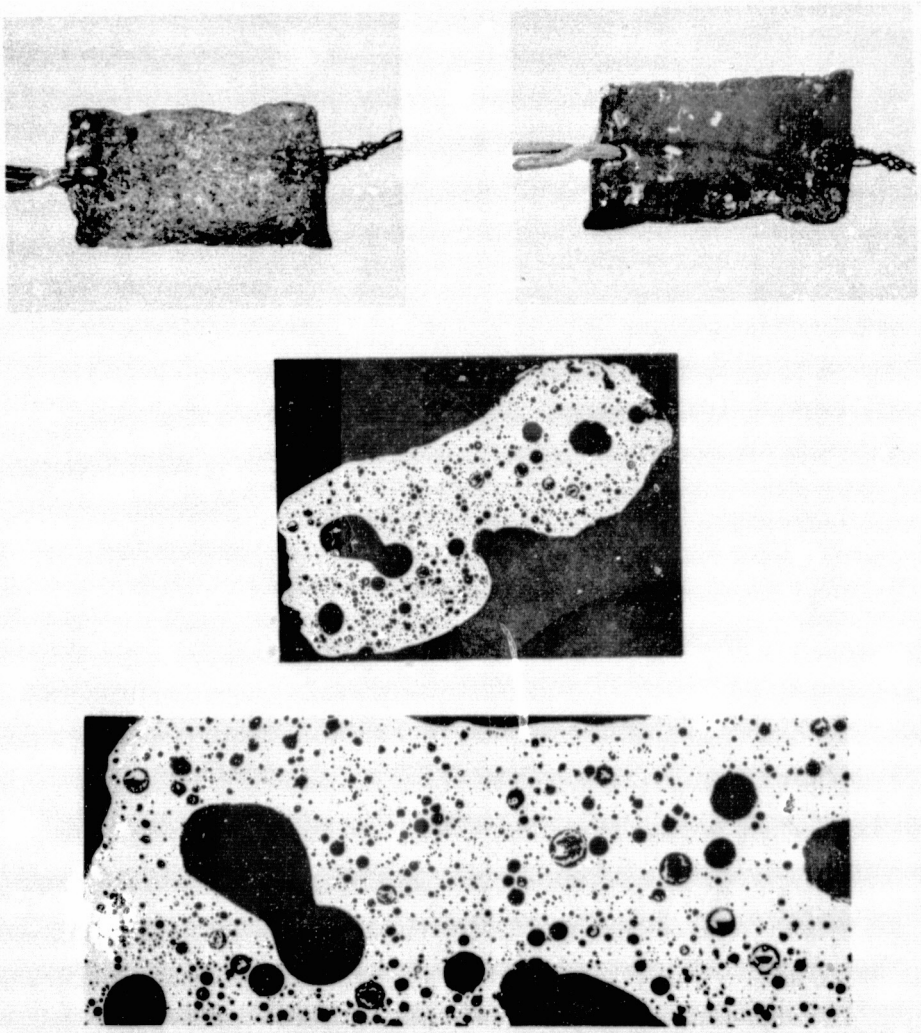

FIGURE 6d. Specimen T-B, SPAR 2, 74-10/3, ~ 160 sec above 660°C, Deposit NASA #5. The top two photos are 3.5X magnification and show the specimen, its support wire (left), and the thermocouple (right). The center and bottom photos are 10X and 25X magnification (as-polished cross-section), respectively.

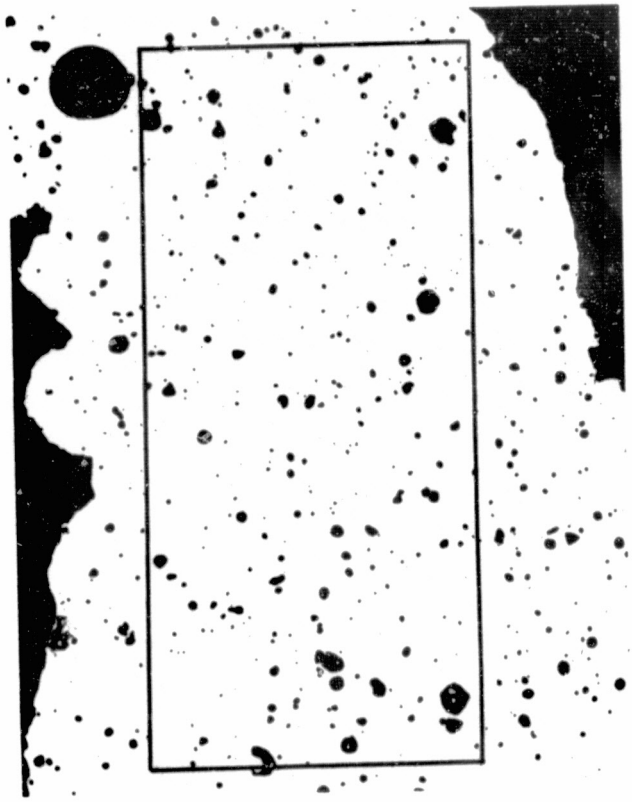

Specimen T-C = 4.4% Void

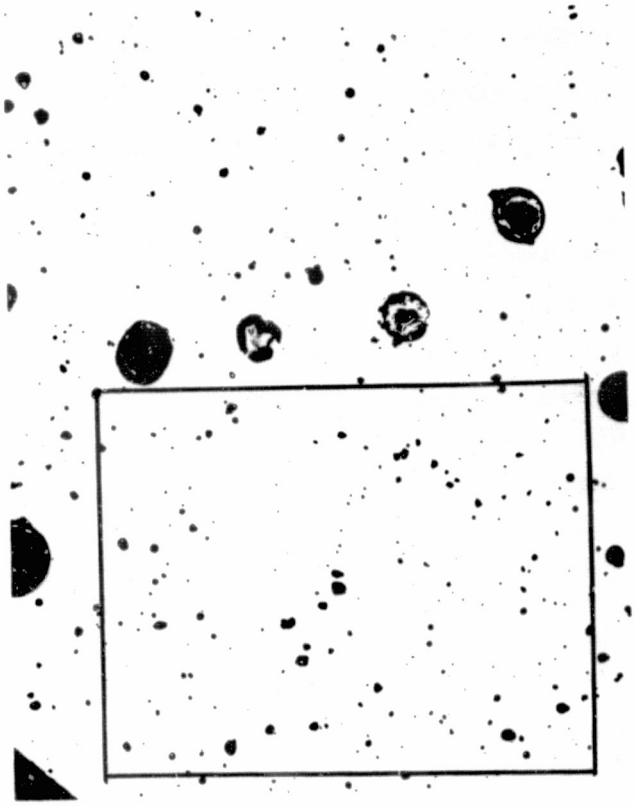

Specimen T-D = 4.1% Void

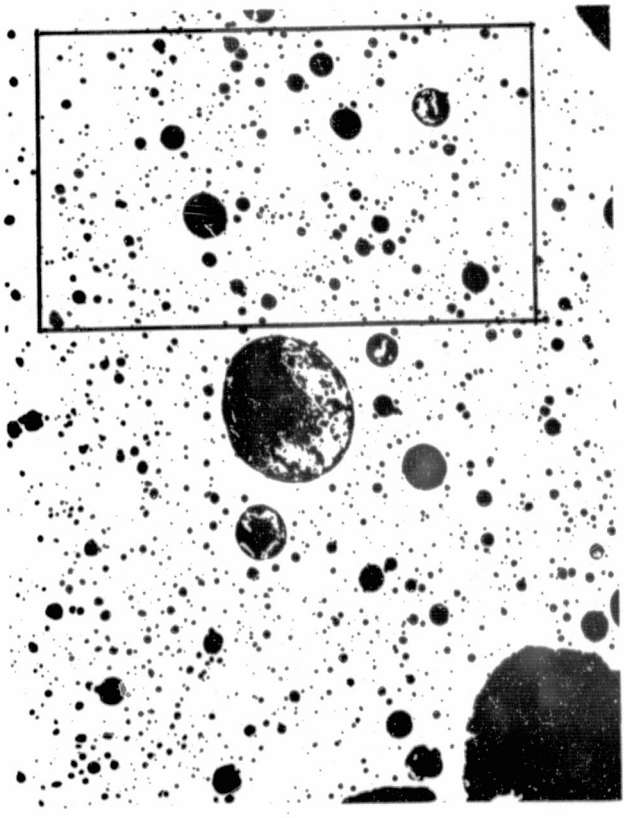

Specimen T-A = 15.5 Void

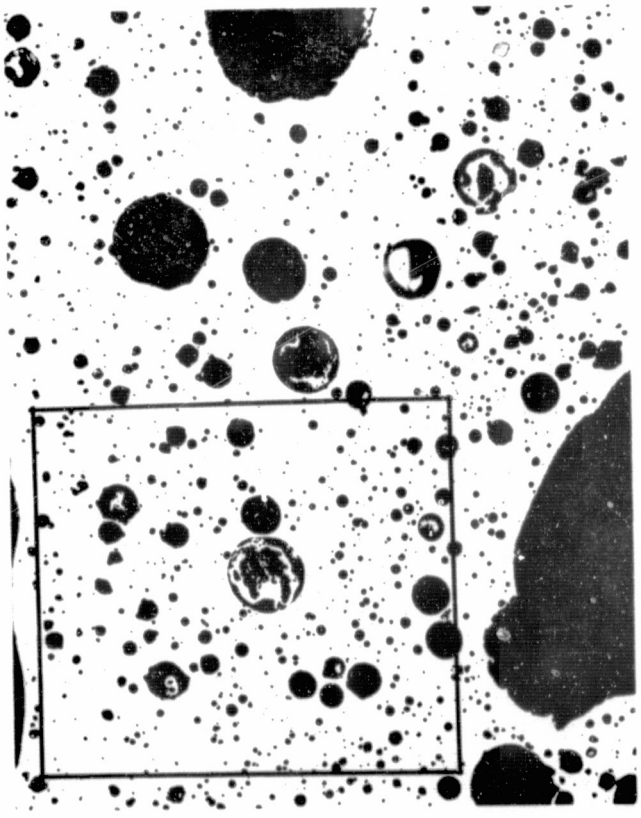

Specimen T-A = 9.8% Void

FIGURE 7. Void Volume Fractions were Measured in the Areas Enclosed with Black Lines. SPAR 2, 50X Magnification.

There was no large systematic difference in microstructure resulting from increased time at temperature for thin specimens. This may be seen by comparing specimens 1-D and 1-J (SPAR 1, ~ 30 sec above 660°C) with specimen 1-E (SPAR 2, 74-10/3, ~ 160 sec. above 660°C), see Figure 3, or specimen 2-C (SPAR 1, ~ 30 sec. above 660°C) with specimen 2-H (SPAR 2, 74-10/2, ~ 85 sec. above 660°C) and specimen 2-G (SPAR 2, 74-10/3, ~ 160 sec. above 660°C), see Figure 4, or Specimen 3-C (SPAR 1, ~ 30 sec. above 660°C) with specimen 3-H (SPAR 2, 74-10/2, ~ 85 sec. above 660°C) and specimen 3-G (SPAR 2, 74-10/3, ~ 160 sec. above 660°C), see Figure 5. However, when sample thickness was much greater bubble coarsening and large increases in void volume fraction were observed with increasing time at temperature. This may be seen by comparing samples T-C and T-D (SPAR 2, 74-10/2, ~ 85 sec. above 660°C) with samples T-A and T-B (SPAR 2, 74-10/3, ~ 160 sec. above 660°C), see Figure 6.

The void volume fraction in these samples, measured in the areas indicated in Figure 7, were T-C = 4.4%, T-D = 4.1%, T-B = 15.5%, T-A = 9.8%. Note that, in general, the largest voids were not counted (except that one was counted in T-B, probably resulting in the high measured void fraction). This is because sufficiently large sample areas were not available to include many of these large voids, and therefore their influence on measured void volume fraction could not be determined accurately. Not counting these voids resulted in falsely low measures of void volume fraction.

Because of the occurrence of the large voids and because of the results of analysis of SPAR I samples, then, it was concluded that statistical analysis of void size distribution, volume fraction, etc. would not be meaningful.

If the equilibrium volume occupied by trapped Ar is calculated for an external pressure of one atmosphere and then adjusted for the additional energy required to create bubble surface area, well over 1 cm^3 of bubble volume would be expected to be generated from 1 cm^3 of as-sputtered Al, i.e. over 50% void volume fraction would be expected. This was not observed, however, probably because of the effects of the adherent oxide layer. This oxide layer effect would be difficult to calculate because the energy required to expand the foam against the oxide restraint would be a function of layer thickness, oxide stoichiometry, degree of continuity (fracturing) of the layer, specimen surface area-to-volume ratio, etc.

The only one of these influences that was examined here was the effect of decreasing the sample surface area-to-volume ratio, which was accomplished by increasing sample thickness, see Tables II and V. In the "T" samples, which were approximately twice as thick as the other samples, effects of increasing time above the melting point were noted, as mentioned above.

REFERENCES

1. J.W. Patten & E.N. Greenwell, Feasibility of Producing Closed-Cell Metal Foams in a Zero-Gravity Environment from Sputter-Deposited Inert Gas-Bearing Metals and Alloys (74-10), Post-Flight Technical Report, SPAR Flight #1, Battelle-Northwest Laboratories, Richland, WA, April 8, 1976. Prepared on NASA Contract NAS8-31384.
2. General Dynamics/Convair, Preparation of Composite Materials in Space, Final Reports, NASA-Cr-124365, January 1973.
3. A.G. Blachman, J. Vac. Sci. Technol., 299, (1973).
4. A.G. Blachman, Met. Trans. 2, 699 (1971).
5. H. Winters & E. Kay, J. Appl. Phys. 38, 3928 (1967).
6. W.W.Y. Lee & Daniel Oblas, J. Appl. Phys. 46, 1728 (1975).
7. D.W. Oblas & H. Hoda, J. Appl. Phys. 39, 6106 (1968).
8. W.W.Y. Lee & D.W. Oblas, J. Vac. Sci. Technol., 4, 86 (1967).
9. F.M. D'Henrle, Met. Trans. 1, 725 (1970).
10. H. Shiraishi, et al, Nihon Kinzoku Jakkai-shi 39, 223 (1975).
11. F.A. Nichols, Acta Met. 20, 207 (1972).
12. R.S. Barnes, J. Nucl. Mat. 11, 135 (1964).
13. G.W. Greenwood, A.J.E. Foreman & D.E. Remmer, J. Nucl. Mat. 4, 305 (1959).
14. B.L. Eyre & R. Bullough, J. Nucl. Mat. 26, 249 (1968).
15. A.J. Markworth, J. Appl. Phys. 43, 2047, (1972).
16. A.J. Markworth & E.M. Broody, Metal Science J. 5, 55 (1971).
17. F.A. Nichols, J. Nucl. Mat. 39, 143 (1969).
18. R. Kelley, Phys. Status Solidi 21, 451 (1967).

19. M.V. Speight, Metal Science J. 2, 73 (1968).

20. A.J. Markworth, Metal Science J. 3, 39 (1969).

21. R.S. Nelson, D.J. Mozey & R.S. Barnes, Phil. Mag. 11, 91 (1965).

22. D.J. Mazey & R.S. Barnes, Mem. Sci. Rev. Met. 63, 7 (1966).

23. D.G. Martin, J. Nucl. Mat. 33, 23 (1969).

24. S.H. Leiden & F.A. Nichols, J. Nucl. Mat. 38, 309 (1961).

25. M.V. Speight & G.W. Greenwood, Phil. Mag. 9, 683 (1964).

26. M.E. Gulden, J. Nucl. Mat. 23, 30 (1967).

27. J.R. Wills & R. Bullough, J. Nucl. Mat, 32, 76 (1969).

28. A.B. Lidiard & R.S. Nelson, Phil. Mag. 17, 425 (1968).

29. M.V. Speight, J. Nucl. Mat. 12, 216 (1964).

30. E.E. Gruber, J. Appl. Phys. 28, 243, (1967).

31. G.W. Greenwood & M.V. Speight, J. Nucl. Mat. 10, 140 (1963).

APPENDIX I

Furnace Control Electronics

SPAR Flight #2

APPENDIX II

Test Specifications and Requirements for SPAR Payload II, Experiment 74-10

---------- AIR MAIL - SPECIAL DELIVERY ----------

cc:
EN Greenwell
JW Patten

Battelle
Pacific Northwest Laboratories
Battelle Boulevard
Richland, Washington 99352
Telephone (509) 942-2603
Telex 32-6345 FTS 444-2603

February 3, 1976

Benedict T. Ondrak
Experiment Integrator
EL55 (10-76)
NASA, George C. Marshall Space Flight Center
Marshall Space Flight Center, Alabama 35812

Dear Mr. Ondrak:

Enclosed please find two copies of suggested Test Specifications and Requirements for SPAR Payload II, Experiment 74-10. Note that this experiment will contain two Thermal Control Units, #1 and #2, each with independent electronics and timing requirements. Please see that Rudy Ruff receives one set of the enclosed documents. If either of you have any questions regarding the specifications, requirements and procedures, please telephone me or Eric Greenwell.

Very truly yours,

J.W. Patten
Mat'ls & Process Engr. Section
231-Z Bldg., 200-W Area

JWP:amd

Enclosures

2/3/70

Experiment 74-10/2
Specifications for All
Subsystem and Flight Sequence Tests

I. Apply simulated rocket battery voltage to J70. (8 pin connector to rocket).

II. Expected time sequence - after G-switch activates

A. 75 secs. heater comes on.

B. 175 to 195 secs. heater relay begins to cycle.

C. Quench at 60 seconds later for TCU #1,
120 " " " TCU #2.

III. Measurements - J71 (19-pin connector to rocket)

A. Pins A through G

1. 1.35 to 1.40 volts until 75 secs.

2. Increasing voltage during heater on.

3. Max voltage expected 5.0 volts.

4. Constant voltage after Pin G reaches set point 4.5 ± .05 volt for 60 seconds for TCU #1,
120 " " TCU #2.

5. Decreasing voltage after these periods.

B. Pin H - Reference junction temperature

1. Should register approximately 1.35 volts at all times with slight variations if room temperature is not 25°C.

C. Pin J - Heater voltage

1. Continuously registers input battery voltage at 11 to 1 reduction.

IV. Critical Measurement

A. Pin G

1. Must register 1.35 ± 0.05 volts until heater is turned on.

2. Voltage must increase after heater comes on-- if it does not change in 20 seconds, abort test.

Test Requirements and Specifications for Experiment 74-10/2

It is requested that the following tests and other operations be performed on the TCU and Experiment 74-10/2 in sequence.

1. Receive experiment package from the PI. Visually inspect and mount TCU and electronics on test plate to be provided by NASA.

2. Perform continuity and pin function checks per enclosed specifications. DO NOT OPERATE UNIT AT THIS TIME.

3. Perform functional tests. Service TCU with water and nitrogen prior to the test and apply power to the electronics package. Specifications for functional test are enclosed. Perform functional test of electronics package simulating flight timeline.

4. At this point, the Experiment Package will be turned over to the PI or representative for inspection.

5. Assuming the experiment package did not fail during the functional tests, the PI or representative will refurbish the unit and install a set of dummy samples.

6. The PI will perform the necessary acceptance tests and then return the experiment package to ET.

7. Perform a pre-integration test to include powered operation of the experiment but without water in the TCU. Purge the TCU with nitrogen gas before powered operation.

8. Install experiment in science payload.

9. Perform subsystem test without water. Nitrogen gas purge is required.

10. The PI or MSFC representative will install Ground Based Test (GBT) samples at MSFC.

11. Perform three flight sequence tests with all other experiments operating. New samples will be installed after each run by the PI or representative. Water and nitrogen gas purge are required for each run.

12. Upon completion of GBT's, PI or representative will install a set of dummy samples.

13. Install experiment package in science payload housing.

14. Purge the TCU with nitrogen gas. Do not service with water. Perform all systems tests.

15. Ship science payload (SPL) to GSFC.

16. Perform SPL AST at GSFC. Purge TCU with nitrogen gas. Do not service with water.

17. Mate SPL with RPL and perform integration tests. Purge TCU with nitrogen gas. Do not service with water.

18. Service TCU with water prior to environmental tests (spin balance and vibration).

19. Perform SPL/RPL vibration and spin balance tests. DO NOT OPERATE EXPERIMENT DURING THESE TESTS.

20. Remove water from TCU.

21. Perform continuity checks.

22. Perform integration tests. DO NOT OPERATE EXPERIMENT.

23. Ship SPL/RPL to WSMR.

24. Perform SPL Verification tests at WSMR, but do not operate this experiment. Perform continuity checks on this experiment.

25. Perform SPL/RPL integrated tests, but do not operate this experiment during these tests.

26. Perform flight sequence tests with rocket in horizontal position. This is a full sequence test of the experiment/TCU. Service TCU with water and purge with nitrogen gas prior to this test.

27. PI or representative installs flight samples.

28. Install experiment, purge with nitrogen gas, and service TCU with water ready for flight.

Experiment 74-10/2
Specifications for Functional Test

A. Set up TCU and provide:

1. Min. of 32 volts to connector J70

   Negative to pins A, C, E, G

   Positive to pins B, D, F, H

2. Input for G-switch to connector J71
   Single pole double throw switch-pins T, U, V with U common

3. Record Heater Voltage (approximately 0-40 volts) on connector J2

   Negative to pins A, C, E

   Positive to pins B, D, F

4. Record solenoid operation (approximately 0-40 volts) on connector J2

   Negative to pin H

   Postive to pin G

B. Simulate rocket launch

1. Provide 32 volts

2. Activate G-switch and start vibration simulataneously

3. Stop vibration after 70 seconds

4. Cut power to test after 360 seconds

C. Recorder analysis desired for correct operation

1. No heater voltage for X seconds (approximately 75--to be determined)

2. Absolutely no voltage on solenoid output until step 5

3. Heater voltage comes on at X seconds and remains constant with no interruptions until J71-G reaches 4.5 ± .05.

4. Heater voltage cycles on and off with J71-G staying constant for 60 seconds for TCU #1
   120 " " TCU #2

5. Heater shuts off, solenoid activates at end of each of these time periods, i.e. 60 seconds for TCU #1
   120 " " TCU #2

Experiment 74-10/2
Specifications for Continuity Checks
All Cables Disconnected

Resistance Checks (make with all cable disconnected)

TCU

8-pin connector

Pins A,C,E to each other	0 ohm
Pins B,D,F " " "	0 "
Pins H to G	30 ohms (solenoid)
Pins A,C,E to B,D,F	1.5 ohm (furnace element)

19-pin connector

A to B	18-20 ohms
C to D	" "
E to F	" "
G to H	" "
J to K	" "
L to M	" "
N to P	4-6 "
Any pair to another pair	Open

Any pin on either connector to TCU	Open

Electronics Box

19-pin connectors

J71 (to Rocket)

Pin A to P	20-25 kilo-ohms
Pin B to P	" "
Pin C to P	" "
Pin D to P	" "
Pin E to P	" "
Pin F to P	" "
Pin G to P	" "
Pin H to P	22 "
Pin J to P	1 "
T,U or V to P	> 30 K

J4 (to TCU)

Pins A,C,E,G,J,L,N are amplifier inputs.

Pins B,D,F,H,K,M,P to each other 0 ohm

Resistance between each other and other pins should be high (> 10 K)

J71-R to J4-R	0 ohm
J71-S to J4-S	0 "
J71-R to J3-S	Open

8-pin connectors

J70-A	to	J2-A	0 ohm
B	"	B	Open
C	"	C	0
D	"	D	Open
E	"	E	0
F	"	F	Open
G	"	G	Open
H	"	H	> 20 K

J1-B, D, and F to each other	0
J2-B, D, and F to each other	0

APPENDIX III

TCU Refurbishing Procedure

1. Assemble support wires and thermocouples to samples.
2. Adjust heating element leads and ceramic insulators to mate with terminal bolts (in part 11, R-216) such that the insulators (part 32, R-2160) prevent the heating elements (part 10, R-2160) from shorting to the heat shields (parts 7, 8 and 9, R-2160).

   Do Step 2 using the procedures in Steps 3 through 12, but without the samples.
3. Assemble sample support wires (assembly 1, R-2160, Sheet 1) to solenoid-end plate (part 2, R-2160).
4. Assemble water manifold (part 6, R-2160) and manifold plate (part 3, R-2160) to solenoid-end plate (part 2, R-2160).
5. Place water housing (part 19, R-2160) in a support with the solenoid up and with solenoid housing (part 15, R-2160) and heater housing (part 12, R-2160) assembled.
6. Place solenoid end plate (part 2, R-2160) with attached parts to solenoid housing (part 15, R-2160).
7. Place heat shields (parts 7, 8 and 9, R-2160) in grooves of solenoid-end plate (part 2, R-2160).
8. Install heater assembly (part 10, R-2160) in solenoid-end plate (part 2, R-2160) such that insulators fit in the slots in the three heat shields (parts 7, 8 and 9, R-2160).
9. Connect heating element leads to terminal block (part 11, R-2160) along with power leads such that power leads contact the micarta terminal block, the heating element leads cover the power leads, and washer covers each heating element lead between the lead and the head of the attaching bolt (part 45, R-2160).

10. Thread six quartz sample tubes (part 22, R-2160) over thermocouples, samples, and support wires, seating the ~~seat~~ quartz sample tubes in recesses in solenoid end plate (part 2, R-2160).

11. Insert seventh quartz tube in center recess of solenoid-end plate (part 2, R-2160) to house control thermocouple (part 51, R-2160).

12. Thread sample thermocouples through base plate (part 4, R-2160) and assemble base plate to heat shields (parts 7, 8 and 9, R-2160) such that quartz tubes (part 22, R-2160) and quartz heater support (part 10, R-2160) align with the recess in the base plate.

13. If all parts fit well through step 12 above, disassemble to step 7 and reassemble with RTV compound on all quartz-metal surfaces.

14. Hot-glue sample thermocouple leads to base plate (part 4, R-2160).

15. Insert control thermocouple (part 51, R-2160) through base plate (part 4, R-2160) and hot-glue lead to base plate.

16. Glue all seven thermocouple lead sets to base plate with RTV.

17. Mount base support plate (part 5, R-2160) to base plate (part 4, R-2160).

18. Solder thermocouple leads to thermocouple cables (chromel to chromel, alumel to alumel) in connector (part 35, R-2160) making sure gasket (part 20, R-2160) is assembled to connector before beginning.

19. Record correlation between sample numbers and thermocouple connections.

20. Verify thermocouple electrical continuity with ohmeter.

21 Assemble furnace base plate (part 14, R-2160) and O-ring (part 38, R-2160) to heater housing (part 12, R-2160) adding washer shims such that base support plate (part 5, R-2160) is held with moderate pressure.

ORIGINAL PAGE IS
OF POOR QUALITY

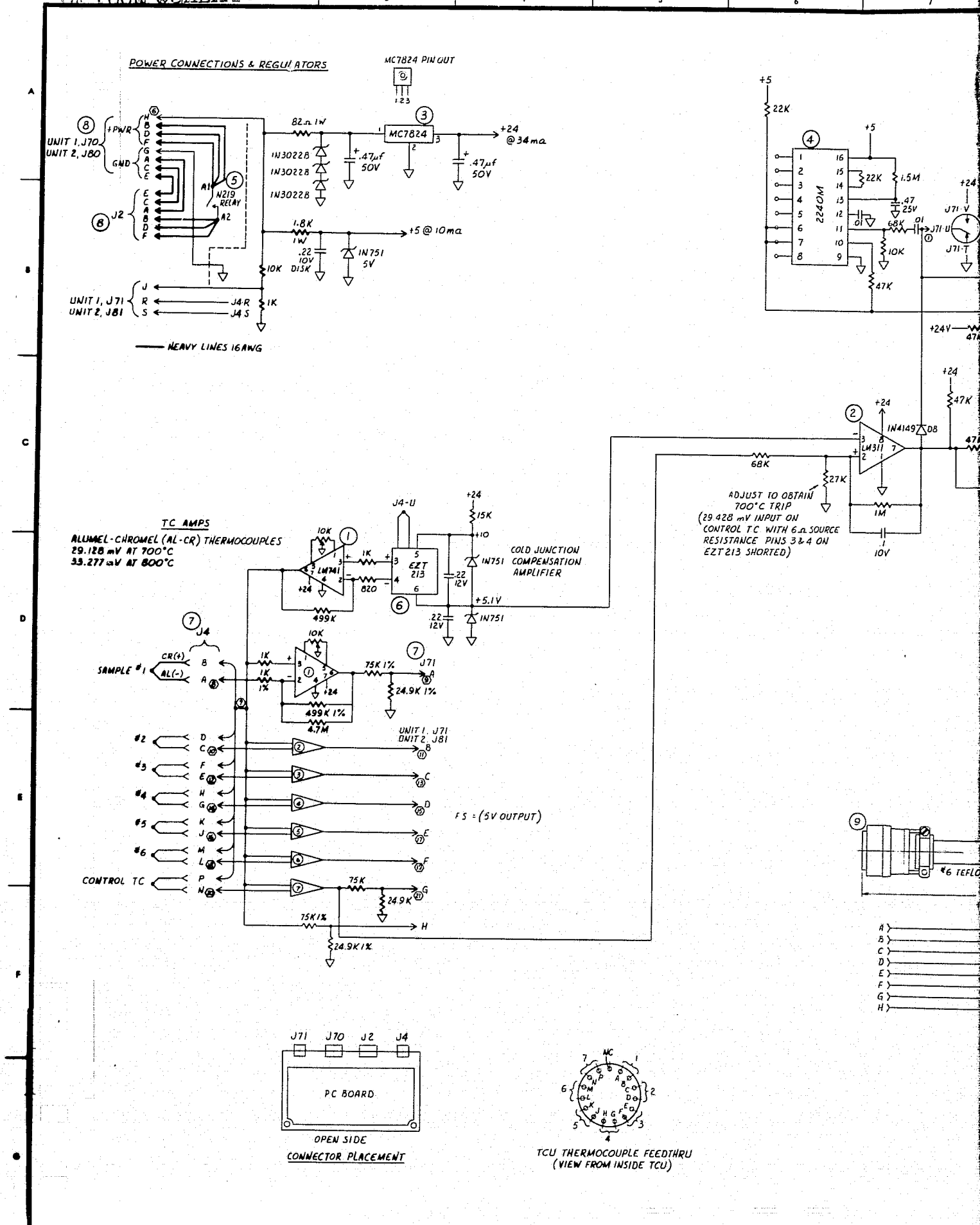

FOLDOUT FRAME 1

QTY	PN	
8	1	NATIONAL SEMI CONDUCTOR
1	2	↓
1	3	↓
2	4	EXAR INTEGRATED SYSTEMS
1	5	HARTMAN ELEC MFG
1	6	CONSOLIDATED OMIC DEVICES
2	7	BENDIX PT07SE-14-19P OR EQL
2	8	PT07SE-16-8P
2	9	PT06SE-16-8S (SR)

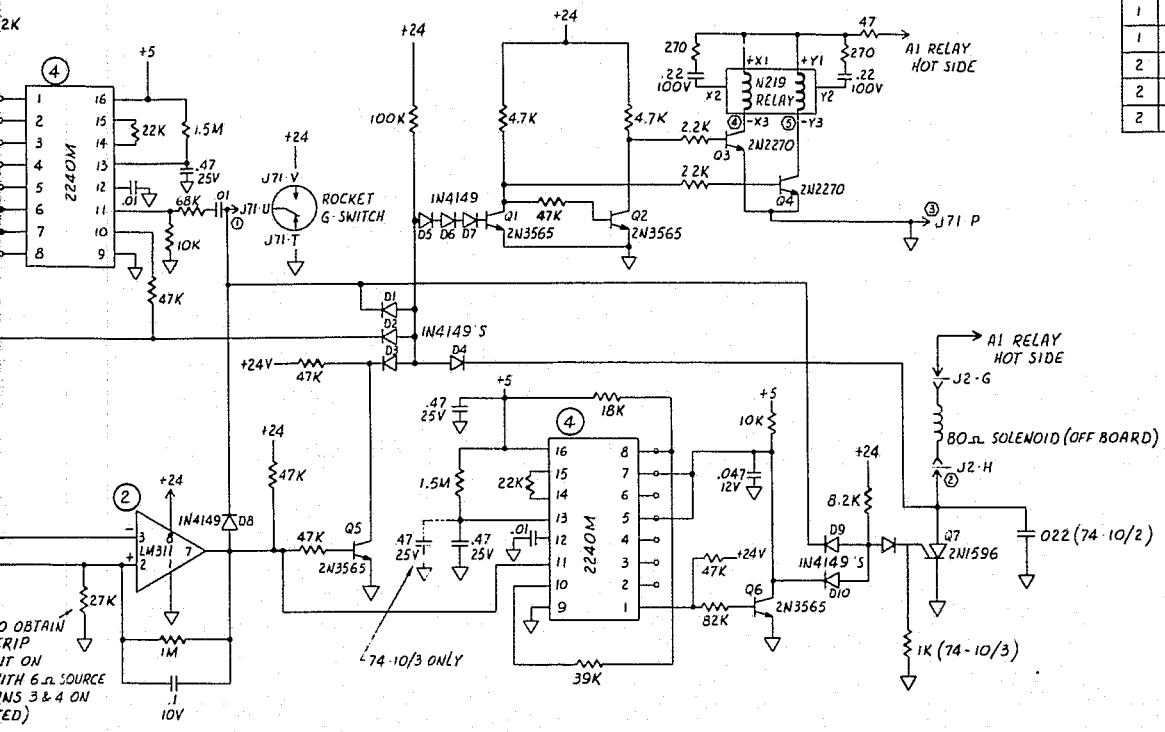

○ DENOTES P.C BOARD PAD NUMBERS

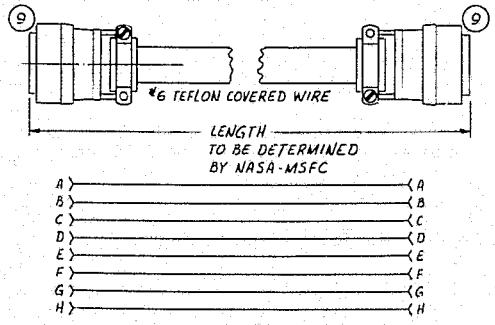

		GENERAL REVISION	1
DWG. NO.	REV NO.	DRAWING TITLE OR INDEX NO.	REFERENCE DRAWINGS
BY-DATE	FOR	REV BY DATE	DESCRIPTION
APPD			REVISIONS

APPD. FOR CONFORMANCE WITH DESIGN CRITERIA — DATE

BY E. Greenwell

FOR MD

APPD

APPD

DRWN E. GREENWELL

DFTG APPD

CHECKED

DRAWN King 19

SCALE

Battelle
Pacific Northwest Laboratories
Richland, Washington 99352

ROCKET ELECTRONICS
74-10/2

DWG. NO. R-2198 — SHEET NO. 1 — SHEETS 1 — REV 1

FOLDOUT FRAME 2

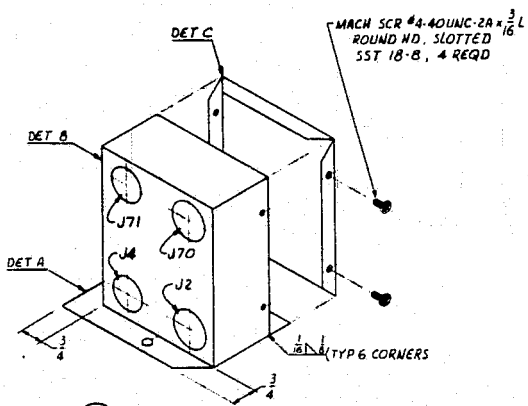

1 ELECTRONICS BOX

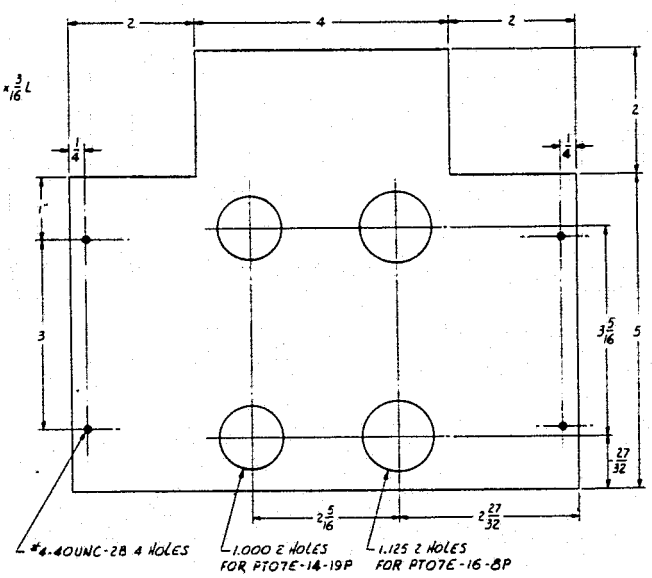

DET B
16 GA SST 304-L

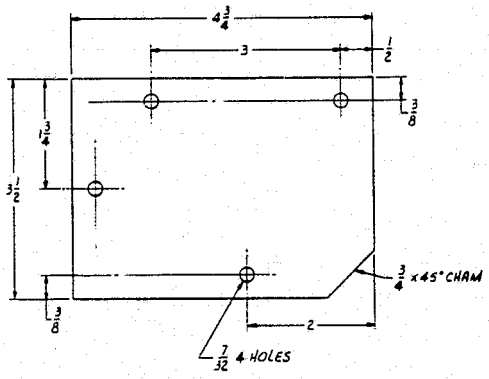

DET A
16 GA SST 304-L

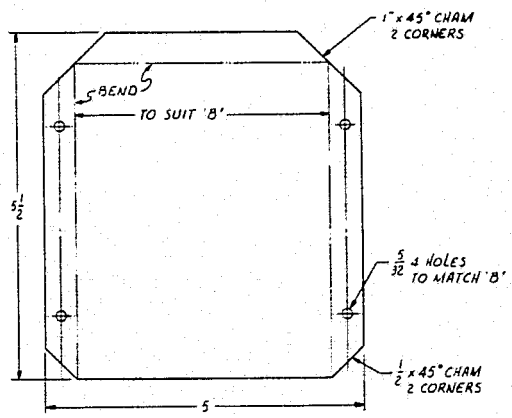

DET C
16 GA SST 304-L

ORIGINAL PAGE IS
OF POOR QUALITY