NASA CR-144842

(NASA-CR-144842) SHUTTLE WAVE EXPERIMENTS Final Report (Colorado Univ.) 54 p HC A04/MF A01 CSCL 20N
N77-17132
Unclas
G3/16 14993

# SHUTTLE WAVE EXPERIMENTS

W. Calvert
Electrical Engineering Department
University of Colorado
Boulder, Colorado 80309

October 1976
Final Report

MAR 1977
RECEIVED
NASA STI FACILITY
INPUT BRANCH

Prepared for
National Aeronautics & Space Administration
Goddard Space Flight Center
Greenbelt, Maryland 20771

# PREFACE

Wave experiments should be performed on Shuttle to verify dispersion relations, to study nonlinear and exotic phenomena, to support other plasma experiments, and to test engineering designs. New techniques are available based on coherent detection and bistatic geometry. New instrumentation will be required to provide modules for a variety of missions and to incorporate advanced signal processing and control techniques.

TABLE OF CONTENTS


| Section | Page |
|---|---|
| INTRODUCTION | 1 |
| OBJECTIVES | 6 |
| TECHNIQUES | 14 |
| INSTRUMENTATION | 23 |
| Z-O COUPLING EXPERIMENT | 41 |
| REFERENCES | 48 |

# INTRODUCTION

A variety of waves occur in space plasmas. They arise from the independent motions of ions and electrons, driven by the wave and constrained by an ambient magnetic field. The wave is thus affected by currents and charges which do not occur in a neutral medium. These extra degrees of freedom produce waves which are both complex and interesting [1].

Plasma waves are important because they carry energy and information. They can exchange energy with plasma particles or with other waves. They can be refraced, reflected, or scattered by inhomogenities. They are useful in studying natural plasmas where they are spontaneously emitted or where they are the basis for measurement techniques.

Waves play a role in most cosmic plasmas: in the Sun and stars, in terrestrial and planetary ionospheres, in interplanetary space, and elsewhere. If we are to understand these plasmas, we require a complete and detailed understanding of plasma wave phenomena.

Our understanding of plasma waves has developed from numerous laboratory and space experiments. Space Shuttle will provide a unique opportunity to continue this work.

In a sense, some space wave experiments were carried out with radio before spacecraft existed. Early radio research showed that the ionosphere could reflect shortwave signals. This stimulated valuable research on magnetoionic wave propagation and on the structure of the ionosphere [2,3]. The ubiquitous tool for the ionospheric studies was the ionosonde, a swept-frequency transmitter and receiver designed to record the echoes of RF pulses. It provided the data to calculate the density of electrons in the ionosphere, 100 to 300 kilometers directly overhead.

When satellites became available, ionosondes were put into orbit to measure the ionosphere from above. This effort

constituted the topside-sounder and ISIS programs [4]. Although the objective of these experiments was geophysical observations, they were also used for plasma wave studies.

The topside sounders revealed the expected pattern of O, X, and Z wave-mode echoes. The O and X echoes (for "ordinary" and "extraordinary") were the counterparts of those observed with ground-based ionosondes. The Z mode is an internal mode. That is, it is not usually accessable from outside a plasma. It was predicted by magnetoionic theory, but only rarely observed from the ground beforehand [2a].

On the other hand, a number of exciting new plasma wave phenomena were also revealed which had not been anticipated. The most prominent was plasma resonances: narrow-band echoes at certain characteristic frequencies, ultimately attributed to electroacoustic and Bernstein-mode waves [4e,5]. Nonlinear, delayed, and remote resonances were also observed. The resonances exhibited complex fringe patterns which are still not fully understood. The topside sounders also revealed other unexpected wave phenomena, including oblique Z-mode echoes, ion cyclotron modulation, proton spurs, cyclotron echoes, and noise emissions of natural origin.

During the same period, many other experiments to study the ionosphere and magnetosphere also revealed interesting plasma wave phenomena. Among these were whistler and radio astronomy receivers.

Whistler studies initially consisted of observing the VLF signals from lightning, propagated through the magnetosphere [6]. This line of research eventually yielded the discovery of the plasmapause and the detection of complex wave instabilities which occur far out in the magnetosphere [7].

Whistler observations were also adapted to satellites, and new plasma wave phenomena were revealed [4c]. Ion whistlers were discovered, caused by another unanticipated wave interaction. Natural emissions were found to occur at the lower hybrid resonance frequency.

It was already clear from ground-based radio astronomy that cosmic plasmas have a propensity for emitting radio noise. Solar radio bursts occur when material is expelled from the Sun. The planet Jupiter was found to emit intense radio bursts. Again, when satellites were used, new phenomena appeared. For example, it was found that the Earth, like Jupiter, was a frequent emitter of intense, non-thermal radio noise, but at frequencies too low to penetrate the ionosphere [8].

All these experiments clearly indicate how varied plasma wave phenomena are and how frequently they occur in space. The topside sounder, whistler, and radio astronomy satellites all revealed new wave effects which were not anticipated. It seems any kind of satellite sensitive to oscillating electrical signals would show us something new about plasma waves.

Unfortunately, few of the previous space experiments were designed to study wave phenomena, and none were optimum for that purpose. The topside sounders were designed to produce excellent ionograms, and they produced many. However, their lack of flexibility limited how far they could be used to pursue the very phenomena they had revealed. The whistler and radio astronomy experiments tended to be of limited capability or to lack worthwhile supporting plasma measurements.

The apparent contradiction that the previous experiments revealed so much about waves, but yet were inadequate, merely emphasizes how prominent wave phenomena are in space plasmas. The effects are so strong that an experiment need not be optimum to observe them. It also emphasizes that the experimenters were quite interested in waves and that they milked every possible aspect of their experiments for clues. This established an illusion that the experiments were better for waves studies than was actually the case.

As a result of experimental limitations, wave studies rarely proceeded beyond an exploratory stage. Most were limited to searching for signatures in the observations and developing plausible explanations. Few opportunities existed for

cross-checking or for the verification of theories. As much as the area was interesting and exciting, it lacked the depth and substance which science should have.

On Shuttle, the study of wave phenomena should be a primary goal rather than happening as a byproduct. It is our opportunity to perform specific wave experiments to resolve unanswered questions and to perform quantitative measurements.

The new experiments should concentrate on confirmation and verification, rather than on the search for new phenomena. However, the discovery of new phenomena should not be ruled out. We will be examining new aspects of the dispersion relations with different geometry and with more sophisticated instrumentation. It would be persumptuous to assume we already know the outcome, and hardly in keeping with our previous experience.

It would be equally presumptuous to claim that laboratory experiments would be sufficient. Only with great difficulty are we able to manufacture a laboratory plasma which is truly representative of the natural conditions in space. Even then, boundary effects and scaling uncertainties would leave a measure of doubt. In fact, benefit is more likely to flow the other direction, as was the case with space-oriented incoherent scatter when it became a laboratory diagnostic.

Compared to other candidate experiments for Shuttle, wave experiments offer an outstanding likelihood of success and benefit. We have experience and a firm theoretical foundation to build from. The technology exists to build exactly the instrumentation which is needed. Although varied and sometimes broad, the research questions are specific. Finally, the subject has wide application in measuring the ionosphere and other cosmic plasmas, and in understanding the wave phenomena which occur there.

The purpose of this report is to discuss Shuttle wave experiments and to recommend how they should be conducted. The remainder of it is devoted to the objectives, to the techniques

which may be used, and to the instrumentation which will be needed.

Among the recommendations, the following is the most important: We should get on with it. Over the years we have lost our momentum. A few more years and Shuttle will suddenly be available. Funding pressures notwithstanding, it is time to begin developing new instrumentation.

## OBJECTIVES

The basic objectives for Shuttle wave experiments should be twofold: to study waves in space plasmas and to apply wave phenomena for other benefits.

Five categories of wave experiments might be recognized: (1) Dispersion, (2) Nonlinearities, (3) Exotic phenomena, (4) Support, and (5) Engineering. The first three pertain to the physics of plasma waves and the last two, to applications. Worthwhile experiments could be performed in any or all of these categories. Geophysical observation has not been included as a category because it was the subject of most of the previous space experiments with waves.

Dispersion. The fundamental property of plasma waves is that they exhibit dispersion. That is, the wave phase velocity varies with frequency. This affects how a wave propagates and gives rise to a variety of dispersion phenomena, including oblique propagation, refraction, reflection, retardation, coupling, scattering, and ducting. There are a number of distinct wave modes in a plasma, each with its own dispersion properties.

The full spectrum of wave modes and dispersion phenomena occur in space plasmas. In previous experiments we have observed the O, X, and Z electromagnetic waves, whistler waves, electron and ion acoustic waves, ion-cyclotron waves, and Bernstein-mode waves. Other low-frequency modes, like Alfven and magneto-hydrodynamic waves, are known to occur but the direct observations of them are limited. The medium for all these wave modes is not only dispersive, but it is frequently also anisotropic and nonuniform.

Two kinds of dispersion studies should be considered: (1) verification of dispersion relations, and (2) investigation of specific dispersion phenomena.

Because of their fundamental importance, the dispersion of

plasma waves has received considerable theoretical attention [1]. Consequently, detailed dispersion relations exist for all of the wave modes we expect to encounter. Unfortunately, it has not received comparable experimental attention with space experiments. Few of the dispersion relations have been accurately verified, and none to the precision possible in space. Instead, it seems, we have accepted the theories without question.

Specific new experiments will be required for dispersion measurements. I shall cite an obvious example: The observed pattern of O, X, and Z echoes on topside ionograms is a compelling suggestion that megnetoionic dispersion theory is correct. It might be supposed that such observations could be used for quantitative verification. Unfortunately, the comparisons with ground-based sounding and incoherent scatter were inadequate. While the agreement was satisfactory to justify using topside sounders to measure electron density, persistent discrepancies were observed [4b]. It still remains uncertain whether the discrepancies were caused by nonuniformity of the ionosphere or by inaccuracies in the true-height analysis, or whether they could be indicating some defect in the dispersion theory.

Shuttle dispersion measurements should adopt a more straightforward approach. The phase delay should be measured for a well-defined propagation path. Since it amounts to measuring the phase velocity, this yields the dispersion relation directly, without the complications of requiring echoes or dealing with group velocity.

The emphasis should be on the less familiar wave modes. Unless I am quite mistaken, the electromagnetic modes will be quickly verified. But with all the other modes, each depending differently on the plasma parameters and on geometry, the complete study of dispersion will not be a trivial task.

Although the verification of dispersion relations may seem to be a pedestrian objective, it should not be dismissed

lightly. Time and again, progress is made from such undertakings. The measurements are unique and within our capabilities. They will show where the theories are correct and reveal their limitations. If new phenomena are lurking in the corners, they will provide the evidence. I have no doubt that, if dispersion measurements are carried out properly, they will be of value.

On the other hand, it is easier to appreciate why specific dispersion phenomena should be investigated. Here we are pursuing further a phenomena not fully understood or seeking to explain observations previously made.

The most attractive candidates for attention are the phenomena which involve energy conversion. It is important to understand how wave energy in one mode can be converted into a different mode. This may occur at a smooth transition where different dispersion curves are connected, as they are between the electron acoustic and Z modes near the upper hybrid resonance. It may occur abruptly, when waves are scattered by irregularities. It may also occur at certain coupling regions, where two dispersion curves are close enough to permit tunneling across a gap where propagation is prohibited. For instance, a coupling region exists between the Z and O modes that was the basis for explaining how Z-mode echoes are observed by a ground-based ionosonde.

For example, the observations of terrestrial kilometric radiation (TKR) and similar emissions by other planets are of current interest. Obviously energetic particles are exciting a wave instability, and a theoretical search is on to find the appropriate instability mechanism [9]. At the same time, we should study how the wave energy gets out of the plasma where it is generated and propagates to where it is observed. If the instability mechanism involves resonant interaction with slow waves, as appears likely, the energy will be deposited in the Z or whistler modes. Since these modes are internal, it remains to ask what conversion processes are required to get

the energy out.

Two conversions processes should be considered, and they could be studied with Shuttle wave experiments. The first is Z-O coupling. We should study how wide a window it is and measure how efficiently it can transmit energy. The second is scattering by irregularities, especially those near the plasmapause. Particular attention should be paid to polarization shifts between the plasma and cyclotron frequencies, when the latter is higher. We should also consider a combination of these two processes, and ask how the presence of irregularities affects Z-O coupling.

Nonlinearities. Most dispersion phenomena are linear. That is, nonlinear terms in the equations-of-motion are either absent or may be neglected. With this approximation, waves of different modes, at different frequencies, or in different directions propagate independently. Although the linear approximation is widely applicable in space, nonlinearities frequently appear. They cause attenuation, instability, and the interaction between different waves.

Nonlinearities make a complex subject even more complex. For instance, in wave-wave interactions, energy in one wave can be transmitted to other waves, in different modes, at different frequencies, and propagating in different directions [10].

Although of much interest, nonlinearities have hardly been studied with space experiments. In the topside sounder observations they produced spurious resonances at frequencies related to those of the principal resonances. Whistler and radio-astronomy observations have revealed a variety of natural instabilities, and a few cases where instabilities can be artifically stimulated. Except for these, and an offshoot experiment looking for waves excited by the Echo electron beams [11], we are lacking experiments which purposely excite nonlinear phenomena and study them carefully.

For active experiments, the two obvious excitation sources are waves and particle beams. With its large load capacity, Shuttle will provide the opportunity to launch high power waves or intense beams. However, this may not be a telling point. Such vigorous excitation was not required in previous experiments which showed evidence of nonlinearities. Instead, the new opportunity to study nonlinearities will really consist of better geometry and more sophisticated instrumentation.

Strong sources may be carried on Shuttle for other purposes, such as heating or otherwise modifying the ionosphere. If so, wave instruments to observe nonlinearities should accompany such activities. Furthermore, the sources should be modulated and synchronized with the wave instruments to facilitate interpretation.

Because of its large cross-section and its venting of gasses, the Shuttle-Orbiter will generate a substantial wake. This disturbed region should be examined for nonlinear generation of waves. Similarly, waves produced by large chemical releases should be sought.

Geometry will be a key aspect of nonlinear wave experiments. In passive experiments, such as observing natural instabilities, ray tracing back to the source would be helpful in interpreting the observations. Consequently, the measurement of polarization and direction of arrival, as well as of the ambient ionosphere, will be important. In active experiments, the orientation of the excitation beam or wave is important. It will determine what waves can be stimulated and the positions where interactions can occur. Consequently, bistatic experiments will be needed, in which the geometry is carefully controlled.

Since our experience is limited, many of the nonlinear studies will be exploratory. They will involve launching one or two waves to achieve specific propagation-vector and frequency combinations, and waves will be sought at still other frequencies.

Exotic Phenomena. A few exotic phenomena occur in space plasmas which stimulate our curiosity. It is difficult to identify their practical value. Perhaps the best justification for studying such phenomina is that they may overlie more practical or fundamental information, as yet unknown.

Among exotic plasma phenomena, the most striking are those which exhibit memory. Under certain circumstances, information impressed on a plasma can be stored for a period and later released. Two such memory phenomena have been observed: cyclotron echoes and long-delayed echoes.

The cyclotron echo occurs at the electron cyclotron frequency. It is stimulated by a pulse pair, followed later by a third pulse. The echo appears after the third with the spacing of the first two. It was observed first in the laboratory [12], and it appears to be adequately explained. Although with some difficulty, it has also been observed in space with topside sounders [4f].

On the other hand, long-delayed echoes (LDE) are still much of a mystery. They are echoes of radio transmissions delayed by up to 10 or 20 seconds, first observed by reliable early radio experimenters [13]. Unfortunately, modern experimenters have been hard pressed to duplicate the effect [14, 15], and it is not known why. Perhaps they have not found the right rare combination of conditions. Perhaps it may even be the proximity of other radio transmitters, which didn't exist earlier, that interfere or dump the memory too soon.

Shuttle could be used to pursue the LDE phenomenon in two ways. First, we could search for LDE by transmitting coded signals from the Orbiter and receiving with a free-flier following some distance behind. With Shuttle, we could try this in remote areas, like the southern Pacific or Indian Oceans. Second, we could attempt to confirm the theory proposing that natural electron beams are required [15], by using an artificial beam emitted from the Orbiter.

Other exotic phenomena might be pursued. For example, we might look for the pulse percursor, a speed-of-light forerunner

of a narrow pulse, which penetrates a dispersive medium before it achieves organized wave motion. Or else we might attempt to generate non-sinusoidal solitary waves, once we have determined that nonlinearities are sufficiently strong.

Support. If we are going to do any other plasma experiments at all, wave instruments should unquestionably be included to provide supporting measurements. They might act as a receiver to search for any waves generated, or as a sounder to measure the ambient plasma in which the experiment is being conducted.

The latter will probably be the most useful supporting role. We have a great deal of experience with sounders and with interpreting their ionograms [4a]. Sounders can accurately measure the local electron density and the profile of electron density out to a considerable distance. They can reveal irregularities and other details of ionospheric structure. If the primary experiment creates or destroys plasma, that too can be sensed with a sounder.

In order to be an acceptable supporting experiment, the wave instrument has to be unobtrusive and compatible. This should be kept in mind in designing new equipment.

It is not generally realized how unobtrusive wave instrumentation can be. It need not be as heavy, nor require as long antennas as the ISIS satellites. ISIS was designed for high-quality, long-range sounding. In a supporting experiment we can do with a lot less. Tens of pounds and tens of meters, not hundreds.

A sounder, of course, produces RF fields and potential escursions while it is operating [4d]. If these could interfere with other experiments, the obvious solution is to coordinate with them. Using a flexible sounder, it would be easy to time the transmissions to occur when the disturbance can be tolerated.

Engineering. As long as we operate in space plasmas, with Shuttle and its successors, the need will continue to arise for engineering experiments either to exploit or to overcome various plasma effects.

For instance, Shuttle wave experiments could make a contribution to the engineering of antennas. There have been few opportunities to test antennas in space plasmas. With its large volume and weight capabilities, Shuttle could easily carry a number of antennas for this purpose.

Most antenna engineering experiments will consist of measuring the radiation pattern and efficiency of different configurations. Particular attention should be paid to radiation in different wave modes, when more than one exist. New antennas should be designed which favor specific modes. For example, can we design an antenna to prevent the electrostatic modes from hogging most of the energy near a resonance? How would we design an antenna for Alfven waves?

We might also ask about the side effects of transmitting in a space plasma. What limits the power that can be used? When will ion bombardment cause damage, and how can it be avoided?

## TECHNIQUES

The purpose of discussing techniques is to indicate how wave experiments might be performed. It is also to emphasize that the techniques are varied and that they extend beyond those employed in previous experiments.

It is not intended that we choose between techniques. Instead, our instrumentation should be capable of any or all, as is appropriate. With the current state of electronic technology, this will not be difficult.

Shuttle wave experiments should include techniques not previously available. These will involve phase measurement (requiring coherent detection) and bistatic geometry (requiring two spacecraft).

Previous Experiments. Previous space experiments using waves concentrated on exploration and geophysical measurements. Consequently, they were not optimum for wave studies even though they yielded many worthwhile observations.

Just like ground-based ionosondes, the topside sounders measured group delay. They were active (used a tramsitter to stimulate the plasma) and monostatic (received echoes back at the point of transmission). The echo amplitude was recorded as a function of time after the transmission of short, narrowband pulses. The frequency was swept to measure the vertical profile of electron density in the ionosphere, or else held constant to measure spatial structure.

The radio astronomy satellites were passive receivers. They measured the amplitude of natural emissions as a function of frequency. Multiple antennas, antenna-pattern nulls, or occulation were used to sense polarization and direction of arrival, although with some difficulty [8, 16]. For wave studies, these experiments suffered from incomplete spectral coverage and the lack of reference plasma measurements.

Space whistler experiments were also passive receivers. The technique relied heavily on spectral analysis of the received

signal. Characteristic signatures, in frequency and time, were analyzed to study terrestrial and magnetospheric sources, as well as the propagation medium in between.

Measurable Quantities. Obviously, wave experiments involve receiving a wave signal. We are interested in the information which can be extracted from that signal.

The basic attributes of a received signal are its amplitude, frequency, and phase. In active experiments like sounding, where the stimulus occurs at a known time, we can measure the delay until a response is received. In passive experiments, we can observe the development of an event. If multiple or directional antennas are provided, we could also measure polarization and direction of arrival.

Few of the previous experiments took full advantage of the measurable quantitites at their disposal. They discarded or suppressed information which might have been of benefit. In new experiments we should avoid doing this unnecessarily.

In particular, most previous receivers used amplitude detection and discarded phase information. As a result, techniques requiring phase information could not be used. Furthermore, it hindered the observation of phenomena more narrow in frequency than the receiver bandwidth. Without phase information (or its equivalent), we cannot further process the signal for narrowband structure. This shortcoming should be avoided in future wave receivers by providing coherent detection.

Because of the need for multiple antennas, direction-of-arrival and polarization are difficult quantities to measure. A complete measurement would require electric and magnetic sensors for all three axes, a total of six antennas. It has been necessary to forego such sophisticated antenna systems, primarily because of limited payload capacity. In those situations where direction of arrival or polarization were important, it has been necessary to rely on indirect observations, such as spin modulation.

Passive Reception. The technique which at first seems

simplest is to mount a receiver on a spacecraft and listen to natural emissions. It is called passive because we use no device to excite the waves which are received.

One shortcoming of the technique for wave studies is that it relies on natural sources, and nature provides only certain kinds of sources. Since only certain waves and wave interactions are available to be studies, the outcome is bound to be limited.

Another serious shortcoming is the general lack of clues for interpreting the observations. It is difficult to develop a complete picture from just the characteristics of the signal received. In particular, we are usually unable to calculate the propagation path from the source to the receiver or even to deduce accurately where the source is located.

Consequently, passive reception requires the most sophisticated instrumentation we can provide. Supporting plasma measurements are needed to reveal the propagation medium. Full spectral coverage and continuous recording are needed to capture the complete signature of the events being studied. Sophisticated antennas are needed for observing polarization and direction of arrival. In other words, passive reception requires gathering every clue we can.

Unless our objective is the study of natural emissions, passive reception is an awkward technique for wave experiments. Simpler active techniques will reveal more about wave phenomena.

Active Experiments. Instead of using natural sources, active experiments stimulate the waves which are observed, using a transmitter or some other device which can disturb the plasma. They gain considerable advantage from having a known source, at a known location, which can be controlled.

A transmitter is attractive not only because it launches a known wave (or waves), but also because it can easily be modulated. This is the basis of sounders, where the modulation is short pulses. Received signals are sought which are synchronized with the transmitted pulses. We can thus concentrate

on those signals which are stimulated by our transmitter.

It is equally important with other excitation devices, such as electron or ion beams, to synchronize with the receiver. If possible, they should be modulated to produce clear-cut signatures in the received signals.

As in passive experiments, deducing the propagation path is still a key problem. It is usually possible and always easier with active experiments, using the known source location and timing echo delays by modulating. However, we have yet another option to help achieve a known propagation path. It is that we can separate the source and receiver and vary the geometry of the experiment. The terms "monostatic" and bistatic" (ignoring that "-static" is inappropriate) are used to express whether the source and receiver are co-located or not. Our other option in active experiments is bistatic geometry.

A pecularity of monostatic active experiments is that the medium must provide an echo mechanism in order for a phenomena to be observed. For example, in topside sounding the O, X, and Z modes undergo specular reflection by the ionosphere, but the whistler mode does not. Consequently, the whistler mode produces no echoes, and so it has scarcely been studied with sounders. Whistler waves have been observed only by using two sounders when they happened to pass near one another, thus providing a brief bistatic experiment.

In view of the limitations of monostatic sounding, and the substellite capabilities of Shuttle, an emphasis should be placed on bistatic measurements. Such wave experiments would be unique by having a long duration and by using the Orbiter's maneuvering capability to vary and control the geometry.

Three specific techniques for active experiments will be discussed: group delay, phase delay, and dispersive doppler.

Group Delay. Sounders depend primarily on the measurement of group delay. This is an integral quantity determined by the group velocity at each point along the propagation path:

$$\text{GROUP DELAY} = \int_{\text{path}} \frac{1}{\vec{u}} \cdot d\vec{s}$$

where $\vec{u} = d\omega/d\vec{k}$ is the group velocity.

True height analysis is the numerical procedure for inverting the group delay integral. With monostatic sounding and a horizontally statified ionosphere, it yields the electron density as a function of height. Such true height profiles were the primary objective of the topside-sounder experiments. They will remain valuable in Shuttle wave experiments as a supporting measurement, both for other plasma experiments and for the wave experiments, themselves.

The outstanding advantage of group delay measurements is that they are insensitive to most instrumental parameters. The transmitter and antenna are not critical as long as they launch a strong enough wave. Phase and frequency shifts can usually be ignored. Echo amplitudes need not be accurately measured. Neither transmitter nor receiver bandwidths are critical, as long as they adequately define the frequency. In fact, the only quantity requiring accuracy is the delay, and that is relatively easy to measure.

The group delay technique is also a powerful one for separating and identifying different phenomena. Different wave modes travel at different speeds. Waves from different positions tend to arrive at different times. Different phenomena exhibit different characteristic frequencies. The varied results from the topside sounder experiments, and the facility with which the experimenters could extract information from their ionograms, is clear proof of this power.

Consequently, group delay measurements should be an important part of Shuttle wave experiments. They should not be abandoned for other techniques, but combined with them. Some phase or doppler measurements can be conducted with pulses, for example.

Furthermore, variations of the group delay techniques are possible which have not been exploited. Bistatic group delay is only moderately more difficult to execute or interpret, but it will reveal more about waves. With modulated particle beams and measuring group delay, we would have a new, and very powerful, tool for studying wave-particle interactions.

Phase Delay. Our most direct technique for measuring the dispersion of waves is to measure wavelength. This is accomplished by transmitting over a known path and measuring the phase of the received signal.

The only trick to this technique is deducing the number of wavelengths in the path. The receiver phase, relative to that of the transmitter, indicates only by what fraction the path differs from an integral number of wavelengths. This is known as the phase ambiguity.

One way to resolve phase ambiguity is to know, either from theory or from other measurements, the approximate wavelength. The phase measurement then serves to improve the precision. Another way is to perform a sequence of phase measurements, gradually varying either the frequency or the path length. If the steps of the sequence are small enough, we can follow as individual wavelengths are added or deleted. We can thus measure the approximate wavelength and resolve the ambiguity. In some cases we might follow a particular wave mode to cutoff, where its wavelength becomes infinite.

The advantages of the phase delay technique are its high sensitivity and great precision. Where the signal is continuous, phase information is accumulated rapidly and it can be integrated to eliminate noise. In a typical experiment, we might use a ten-wavelength path and be able to measure phase to 3 degrees. The phase velocity accuracy would thus be 0.1 percent. Indeed, such measurements would be unique, and the ionosphere is one of the rare plasmas which is sufficiently uniform for such precision to be meaningful.

The principal disadvantage is that suitable propagation paths may be difficult to achieve, and each one is appropriate

only for a limited range of wavelengths. The path should be a few wavelengths for precision, but it cannot be too long to resolve the phase ambiguity. The practical range may be five to twenty-five wavelengths. For electromagnetic waves at 1 MHz, a path of 3 kilometers would be suitable. For electrostatic waves at the same frequency, a path of 30 to 100 meters would be needed.

Phase delay measurements will mostly be bistatic, although monostatic measurements are possible, using pulses. The latter may be useful in certain circumstances.

Dispersive Doppler. In a bistatic Shuttle experiment, both the orbiter and subsatellite will be moving rapidly through the ionosphere. The wave frequency in the medium is therefore doppler shifted, and it is different from that either transmitted or received. Furthermore, the doppler shift depends upon wave dispersion:

$$\Delta\omega = \vec{k} \cdot \vec{V} ,$$

where $\vec{k}$ is the propagation vector and $\vec{V}$ is the velocity. The dispersive-doppler technique uses this doppler shift to measure dispersion.

Since a doppler shift occurs for both transmission and reception, the total shift is

$$\Delta\omega = \vec{k}_T \cdot \vec{V}_T - \vec{k}_R \cdot \vec{V}_R ,$$

where the subscripts T and R designate the two ends of the path. Note that when the medium is uniform ($k_T = k_R$) and the spacecraft velocities are equal ($V_T = V_R$), the two doppler shifts cancel. Dispersive doppler requires either a nonuniform medium or different velocities.

Where the major effect arises from differential velocity, the shift is approximately

$$\Delta\omega = \vec{k} \cdot (\vec{V}_T - \vec{V}_R) = \vec{k} \cdot \Delta\vec{V}$$

In most practical cases, this shift will be small. For example,

at 1 MHz, a separation velocity of 10 m/sec yields a free-space shift of only 0.03 Hz. It appears the usefulness of this case will be limited to higher frequencies or to waves with a large refractive index (e.g. whistler or electrostatic modes).

Where the major effect is due to nonuniformity, the approximation becomes

$$\Delta\omega = (\vec{k}_T - \vec{k}_R) \cdot \vec{V} = \Delta\vec{k} \cdot \vec{V}$$

Because of the high common spacecraft velocity ($V \sim 8$ km/sec), larger shifts will be encountered. At 1 MHz, a unity change in refractive index yields a shift of 25 Hz. This shift would be easy to measure in a few seconds. Again, a larger refractive index could produce greater shifts, up to a few kilohertz for certain slow waves.

Snell's law, and the inner products of the doppler shift, produce the following interesting conclusion: The doppler shift vanishes for equal horizontal velocities and a horizontally stratified ionosphere. This conclusion is valid however the waves are refracted or reflected. However, it is invalid for waves which are scattered or ducted by ionospheric irregularities.

The dispersive-doppler technique will therefore be useful for studying irregularities or other anomalies in the ionosphere.It may even be possible to filter out the doppler-shifted component and eliminate spread F from topside ionograms.

The phase delay and dispersive-doppler techniques both require coherent detection. They also both require accurate knowledge of the subsatellite position when the configuration is bistatic.

Local Plasma Measurements. It should be recalled that wave phenomena can be used to provide reliable local plasma measurements. In situations where minimum support is required, wave instrumentation could thus be used to monitor the ambient plasma.

It has been demonstrated the active wave experiments are an ideal way to measure local plasma density, especially using

resonance relaxation or mutual impedance [17]. The advantage is that these methods are absolute and they are little affected by sheaths or other spacecraft purturbations. The antenna may be simple and smaller than one meter in size.

## INSTRUMENTATION

The instrumentation required for Shuttle wave experiments is basically simple, consisting of a receiver, transmitter, and antennas. However, new facilities will be needed which have not previously been available. Among these are flexible control, coherent detection, and signal processing.

Electronic technology has advanced considerably since the earlier experiments. Many of the limitations imposed by the technology then available are no longer necessary. In particular, electronic complexity is no longer the liability it once was. Complex circuits, especially digital circuits, are easier to achieve and more reliable than the simpler circuits they will replace. Thus we have the opportunity to develop unique new instrumentation for wave experiments.

New instrumentation is needed. Most of the previous equipment was designed for other purposes, and the observation of wave phenomena was considered incidental. Consequently, innovations which would benefit wave studies are still waiting to be implemented.

It is important that new instrumentation be designed for the widest possible range of application. Some equipment, returned by the Orbiter, could be used again on subsequent flights. It would be convenient and economical to reuse as much as possible without alteration. Furthermore, the same basic device is needed on subsatellites. It would be ideal if one common package could be developed which would serve all purposes. Except for certain components, like special antennas or high-power transmitter amplifiers, a substantial degree of commonality may be practical. At least, the basic facilities required in any wave experiment are similar enough to justify developing a common central module containing most of the complexity. Then, to meet specific requirements, subsidiary modules could be added on different missions.

Basic System. All wave experiments involve sensing a wave in the plasma, so they require an antenna and a receiver. The antenna intercepts the wave and produces an electronic signal which we can manipulate. The receiver amplifies this signal, filters it from unwanted signals, and generates the data which constitute our measurement. If the experiment is active, we also require a transmitter and a transmitting antenna. The function of the transmitter is to generate energy for stimulating the plasma; and its antenna, to launch that energy. Often the receiver and transmitter will share one antenna through a "TR" antenna switch. Finally, a device is needed for control: to set the transmitter and receiver frequencies, to tune them, to select operating parameters, and to sequence different functions.

Thus the basic components of wave instrumentation are (1) antennas, (2) receiver, (3) transmitter, and (4) control, as illustrated in figure 1.

For example, consider how these basic components are used in a sounder experiment. The transmitter is set to a specific frequency, connected to the antenna, and energized to transmit a pulse. Then the receiver is tuned to the same frequency and connected to the antenna. Its output is recorded for the appropriate period, long enough for the echo delays expected. Then a new frequency is selected and the cycle is repeated. The echo amplitudes at one frequency constitute a line of the ionogram, and when all frequencies have been covered, the entire ionogram has been obtained.

I shall now discuss a variety of details about wave instrumentation and how it should be implemented.

Frequency. The desired frequency range is dictated by the resonant frequencies of the plasma. In order to include the highest plasma frequencies (equatorial, daytime, sunspot-maximum ionosphere), the upper limit should be around 30 MHz. The lower limit is dictated by ion-cyclotron frequencies, and it is very much lower, reaching frequencies well below 1 kHz. At different

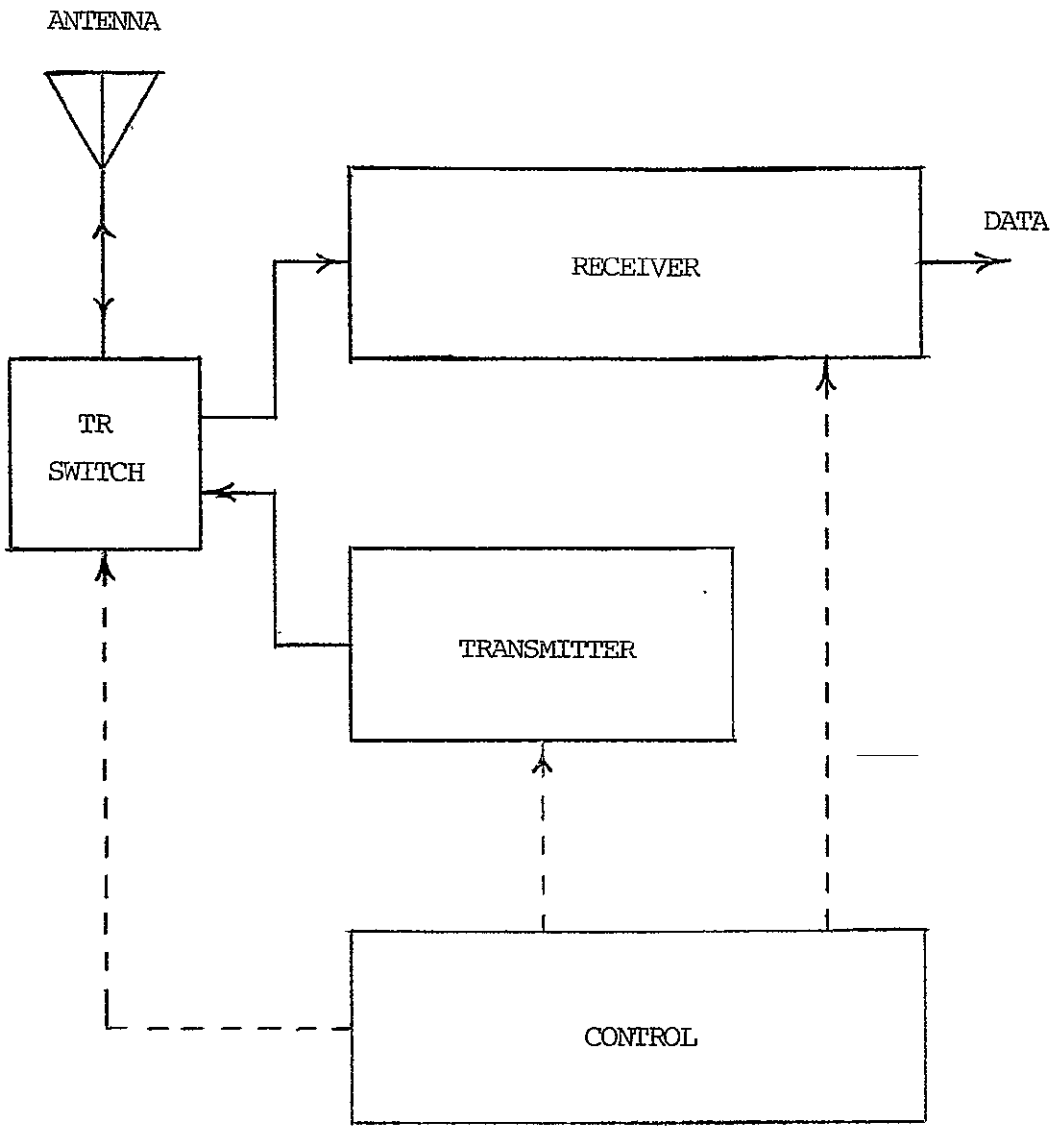


FIGURE 1. SIMPLIFIED BLOCK DIAGRAM

times and places in the ionosphere and magnetosphere, interesting phenomena can occur throughout this wide frequency range.

The spacing between adjacent frequencies should be fine enough for our coverage to be continuous. That is, the edges of adjacent channels should meet or overlap, using a bandwidth we can spectrum analyze. If we can sample at a 2 kHz rate, we need a 1 kHz bandwidth, and this implies that 1 kHz should be our minimum frequency step. With modern techniques, it is a simple matter to build a digitally-controlled frequency synthesizer with this capability.

A variety of receiver bandwidths will be needed for different situations. They will range from the 1 KHz for continuous frequency coverage to 50 kHz for sounding and observing rapid signal variations. When narrower bandwidths are required, they can be synthesized using digital techniques.

The previous swept-frequency and fixed-frequency modes of the topside sounders should be replaced by a capability for executing an arbitrary frequency program. In other words, the frequency program should be a feature of the control unit, rather than of the transmitter or receiver. In addition, the transmitter and receiver should be capable of operating at different arbitrary frequencies.

Most of the frequency range can be covered with conventional radio techniques, using a tuner and IF filters. Special "baseband" techniques will be required at the low end, below 10 kHz. For the receiver, this will involve an audio preamplifier and a capability for digital spectral analysis. For the transmitter, it will involve a power audio amplifier, and possibly a device for synthesizing waveforms.

Power. Transmitter power is an important parameter in active wave experiments, because the necessary amplifier may be costly and heavy. It is also a parameter which varies widely, depending on the specific wave experiment involved. I shall therefore estimate the power which is required in a few typical situations.

The greatest power is required for echo sounding in a noisy environment or over great distances. The radar equation for specular reflection, neglecting dispersion, is

$$P_r = P_t / 16\pi r^2 = E^2 / 377$$

where $P_r$ is the power density at the receiving antenna, $P_t$ is the power radiated, $r$ is the echo range, and E is the received field strength. In order to detect a 300 km echo, in the presence of 1000 microvolt/m interference, we thus require at least 12 kilowatts. A more modest requirement would be to detect a 30 microvolt/m echo from 1000 km, as on a quiet subsatellite sounder. This requires 120 watts. Short range sounding in a quiet environment, out to only 100 km, could be accomplished with only 1.2 watts.

The power required for bistatic measurements, directly between the two spacecraft, is one-quarter that for echoes. It is also less because the path will generally be shorter. Even in a noisy environment (1000 microvolt/m), only 3 watts is required to transmit to a subsatellite 10 km away.

The power require to stimulate resonances (e.g. for local plasma measurements) is also nominal. The topside rocket experiments indicated that 10 watts would be adequate, using an antenna only a few meters long.

The basic module for wave experiments should have sufficient power for a variety of missions, without an auxiliary power amplifier. It should have an excess for a good signal-to-noise ratio, but not an excess that would generally be wasteful. It appears that 100 watts (peak power) would be a suitable compromise. One or two auxiliary amplifier modules might be used, when needed, to boost this signal to the 1 kw and 10 kw levels.

For certain wave experiments, such as short-range work on nonlinearities, power needs to be reduced rather than increased. The transmitter will therefore require a programmable attenuator. It should be capable of limiting the power to well below

one milliwatt.

In some situations where additional sensitivity is required, but the power is not available, the receiver signal could be integrated. This would enhance the signal by the square root of the number of repetitions, but it prolongs the experiment. For example, 10 decibels could be gained by pulsing 100 times in a typical sounder experiment, but it would have to dwell one second on each frequency to achieve it.

Digital Control. The wave experiment, like many similar instruments, lends itself well to digital control and to the use of a digital computer as the controlling agent. This concept has been referred to as the "flexible sounder". Although flexibility will be important, there are other compelling reasons to adopt this approach.

Digital control is attractive because it provides noise immunity and reliability. A great variety of digital devices are available for us to take advantage of, such as memories and phase-locked loops. But, primarily, the digital approach offers useful design disciplines and an ability to handle complexity.

One design discipline is the separation of tasks. In digital control with a computer, the control electronics, the control sequence, and the device being controlled are delt with separately. Another discipline is the formalism of the interfaces between different parts of the system. Control codes are used at the electronic level and programs are used at the computer level. It is far easier to design with control codes and programs than with special gadgets for each control interaction we might require.

The control sequence thus becomes a computer program, and it can take advantage of the ability of a computer to handle complexity. The program can easily deal with exceptions and special cases. It can even include arithmetic calculations if the computer is fast enough.

In other words, simply from an engineering standpoint, the

digital approach is the wisest way to structure a control system.

The flexibility, that is, the ability to change control programs, is usually an over-rated advantage of computer control. However, our wave experiments are one case where it is likely to live up to expectations. In previous equipment, the rigid formats were a serious handicap. To study the topside "Q" resonances, we would like to transmit at $2f_H$ and receive on a different frequency. To study exotic memory phenomena, we would like to use coded pulse sequences, tailored to the situation. A special control program could be provided for each such special study, and it could be altered after we learn more about the phenomena. Also, where the same wave instrumentation is used on different Shuttle missions, a control program optimum for each one could be provided.

Finally, the control program could be designed to react to external signals. It may be necessary to inhibit or delay transmissions to avoid disturbing another experiment, or it may be advantageous to synchronize with an external device used to stimulate waves. Ultimately, there will be opportunities for closed-loop control, where the program reacts to the measured data. Provided the control computer has access, the experimental data could be sensed and thus used to influence subsequent operations. However, until we are sure about automatic sensing, a human will be needed in the control loop, either to modify programs between experiments or to interpret observations on board during an experiment.

The main question about computer control is whether the computer will be fast enough. It is answered by comparing the time between control events with the computer speed. The time scale for wave experiments is typically 100 microseconds (i.e. bandwidths 10 kHz, or less). A conservative, modern computer will have an execution cycle of 1 microsecond. Our speed ratio is thus 100:1. This means we could carry out ten simple calculations, or one complex one, between control events. It is a satisfactory ratio, but not excessive. As a rule, automation

requires $10^3$ or $10^4$ before it becomes easy. Therefore, our conclusion is that computer control is practical if care is exercised.

Three areas should be considered to facilitate computer control: mapping control codes, pulse generators, and multiply hardware.

Control code mapping involves generating one control code from another, using a memory, to avoid calculations. For instance, in the wave receiver, control codes will be required to tune the front-end amplifiers for different frequencies. The tuning and frequency codes will not be the same, but they will be related. If we map the tuning code onto the frequency code, as illustrated in figure 2, only one code will be required to select and tune a new receiver frequency. This, it might be recognized, is a digital solution to the tracking problem--the counterpart of odd-shaped capacitor plates.

Pulse generators, or similar timing devices, will be needed for certain time-critical control operations. A pulse generator in the transmitter would permit shorter wave pulses than would be practical using direct on-off control, and it would reduce the number of control actions required. A timing generator will be needed to control when the receiver data are digitized, to guarantee that the rate is regular and independent of the computer. Incidentally, the use of timers with computer interrupts may not be practical unless the computer is exceptional and has special facilities to eliminate interrupt-handling overhead.

It should be anticipated that some control operations will require evaluating functions. This usually involves a polynomial approximation, and that requires multiplication. The control computer will need a facility, hardware multiply or equivalent, to compute a product in a few microseconds.

Signal Processing. It is convenient to distinguish processing and analysis as follows: By signal processing, I mean manipulating the signal or data to change its form. By analysis,

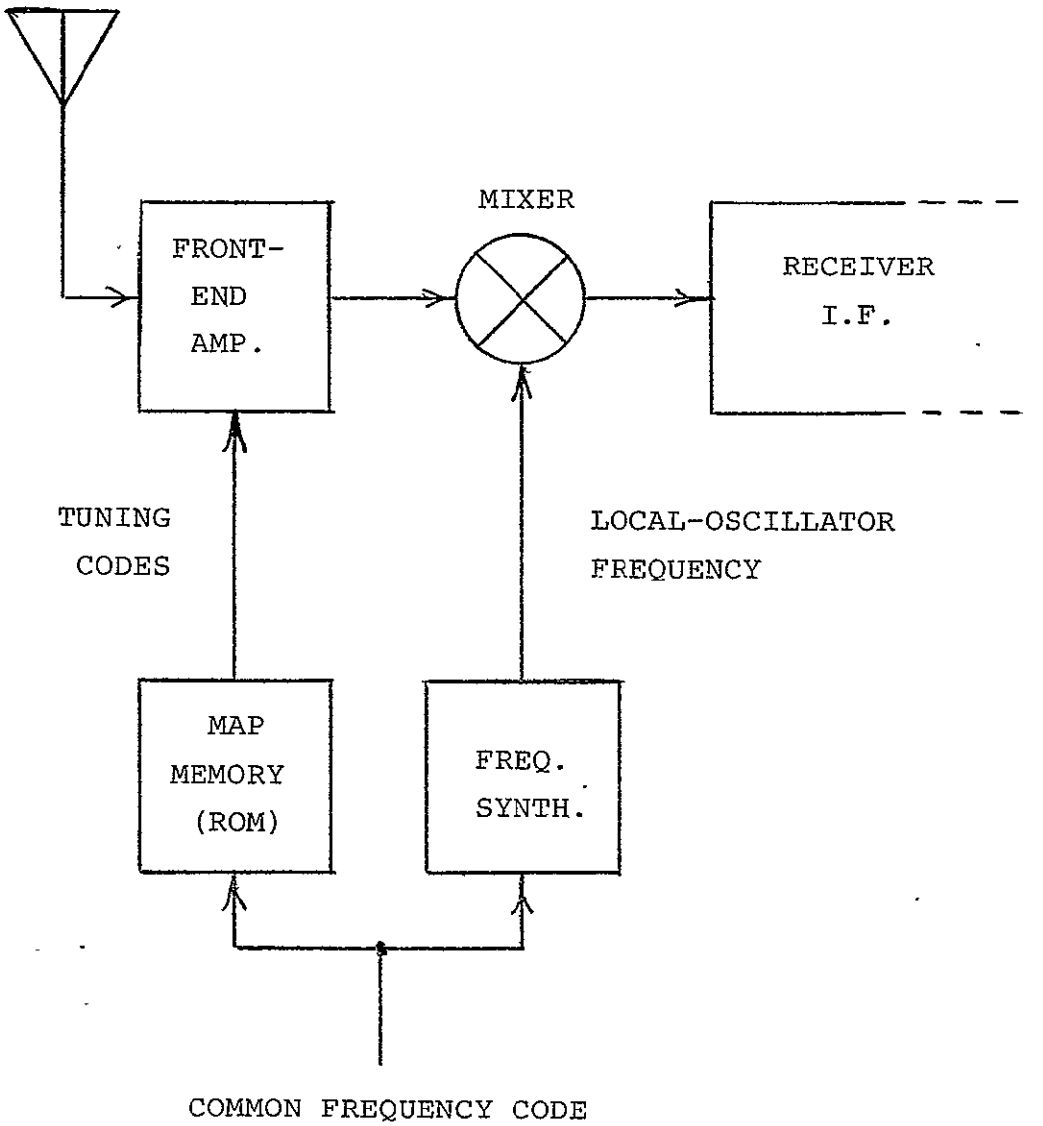


FIGURE 2. CONTROL CODE MAPPING OF RECEIVER TUNING

I mean the calculation of physical information from the data. Wave instrumentation will require suitable facilities to process its data, but it is expected that external facilities will exist for analysis. The two aspects of signal processing which deserve attention are coherent detection and digital processing.

Coherent detection is needed to capture phase information or to permit further digital processing of the signal. It should be included, along with amplitude detection like that used in the topside sounders. For coherent detection, the receiver signal is mixed with a reference signal to produce the signal which is digitized. Single-sideband reception is a familiar example of coherent detection. It amounts to translating the receiver bandpass to zero frequency, and it preserves all the original phase and amplitude information.

In a monostatic measurement, the reference signal will be derived from the frequency synthesizer used to control the receiver and transmitter. In bistatic measurements, it will be necessary to telemeter a reference signal between packages, as is illustrated in figure 3. Of course, the problem of telemetering a reference signal is equivalent to time synchronization. If a facility for synchronization between the Orbiter and a subsatellite is otherwise available, it could be used in lieu of a telemetered reference.

Once the coherent video signal is digitized, it is available for digital processing. Depending on the experiment, this may involve a digital filter to narrow the effective bandwidth, or a Fourier transform to calculate the entire spectrum within the bandwidth. It could also involve integration to enhance a certain signal above background noise.

Again a digital computer would be advantageous. A modest computer would be capable of digital filter or FFT algorithms for a video bandwidth of a few kHz, continuously. If the calculation delays can be tolerated, wider bandwidths could be processed. Many of the arguments for digital control apply equally well for digital signal processing. Instead of fixed

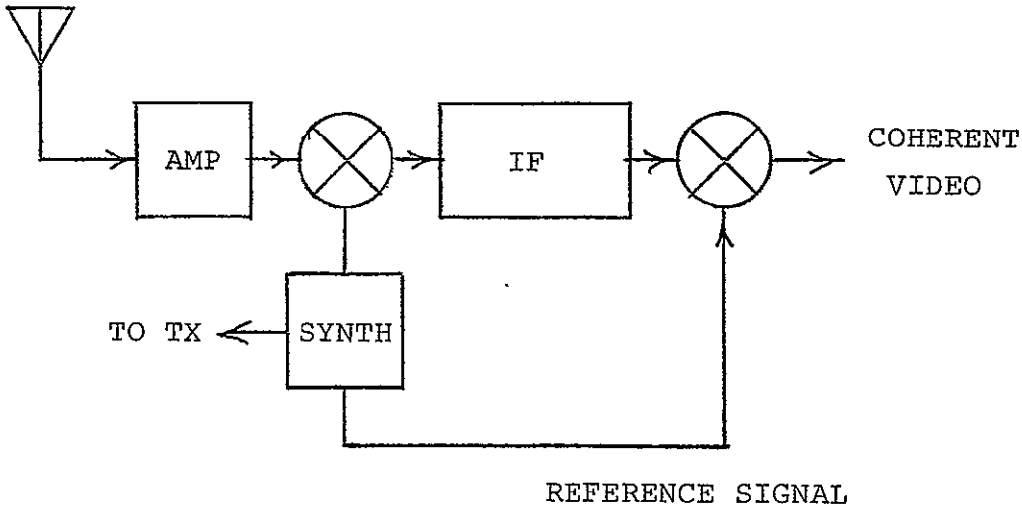


A. MONOSTATIC

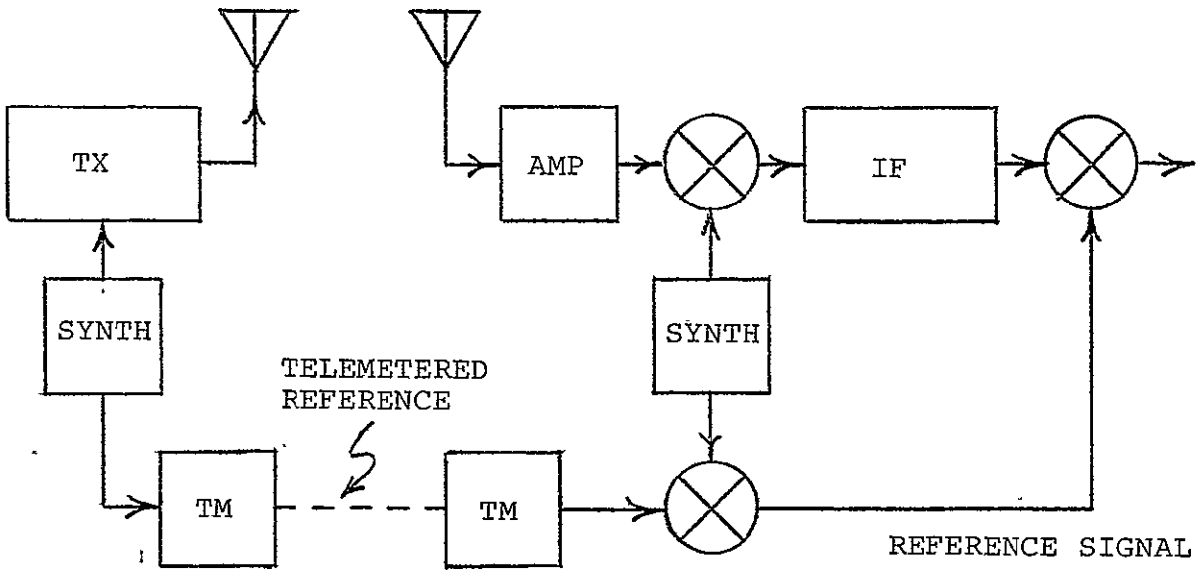


B. BISTATIC

FIGURE 3. REFERENCE SIGNALS FOR COHERENT DETECTION

electronic circuits to process the signals, we would have a processing program, comparable to the control program and providing comparable benefits. In particular, the use of a filter algorithm to narrow bandwidth eliminates the need for special narrow-bandwidth filters in the receiver.

There are thus two areas in the instrumentation which are best implemented with digital techniques: control and processing. They could involve two, separate, small computers. However, it is quite likely that both areas could be handled by the same one, since, in most wave experiments, the peak demands for control and for signal processing will not be concurrent.

Operating modes. Some experiments will be totally automatic. Beyond setting them up, real-time interaction may be either impractical or unnecessary. However, other experiments may require a great deal of real-time involvement.

The main task will be to inspect the data and recognize signatures. That is, to recognize in the data certain patterns and relationships which are difficult to express in an algorithm. For example, in studies of Z-O coupling we need to (1) isolate the frequency range where coupling could occur, (2) maneuver so the propagation path intercepts the coupling region, and (3) recognize whether ionospheric irregularities are present. All three require recognizing signatures on a swept-frequency ionogram.

Therefore, a frequent mode of operation in wave experiments will be to collect data for display and interpretation. It is assumed the Shuttle data system can be used for this purpose, and that it will include a suitable display facility. If so, it should be two-dimensional, with a resolution of at least 250 intensity-modulated points on each axis. An image consists of roughly $2 \times 10^5$ bits, and a new one requires some two seconds. The display load is thus $10^5$ bits per second.

The instrument will be called upon to operate in two modes: one for surveillance and another for the acquisition of data. At times, it must operate in both modes concurrently, channeling

surveillance data to the display and acquisition data to a recording device. It is all a matter of how the control and analysis programs are written.

Standard formats will be useful, particularly for the surveillance mode. In many instances, the wave experiment will operate as a surveillance sounder, and the formats will be the ionograms which proved to be so useful in topside sounding. Alternatively, it could operate as a VLF receiver and produce spectrograms. Programs for these, and a variety of other formats, will be needed for the wave experiment to perform well as a supporting tool, either for itself or for other experiments.

Analysis. The control and processing programs are distinct from the programs for analysis and interaction with the experiment. The former reside in small, dedicated computers located inside the wave instrumentation package. This is necessary because of their time-critical nature. It amounts to these programs being viewed as components, on a par with actual electronic components. On the other hand, our analysis programs are better off residing in the Shuttle computer. There they can take advantage of the facilities they require: computing power, data storage, operator consoles, telemetry, and so forth.

Two categories of analysis programs will be needed: service and scientific. The service programs deal with operations and provide access to facilities. The scientific programs deal with calculations based on physical models of the phenomena under study.

Our primary service functions are the acquisition and display of data. The receiver data, even after processing in the package, will still require formatting and labeling to put them in the proper form. A variety of display programs will be needed for different kinds of ionograms, spectrograms, or other 'grams yet to be devised.

Another important service function will be the communication of control and feedback messages to the wave package. These messages may originate in a master sequencing program, or in

various console devices: switches, knobs, keys, or display cursors. It is through this service function that we get the wave instrumentation to do what we have in mind. It is therefore the software which most dictates what a specific wave experiment consists of. It is also software which will vary substantially between different missions.

Finally, there are a number of routine service functions, such as the loading of programs and parameters or the handling of subsatellite telemetry. It is envisaged that our control and processing programs will be a mixture of firmware and software, but that the latter will be preferred whenever suitable program storage is available.

Among the scientific analysis functions are model calculations and calculations based on models which yield information about the experiment. The main purpose of onboard scientific calculations is for the human operator (or, perhaps, his software counterpart), to generate information for guiding or evaluating the future conduct of an experiment. Otherwise, our analyses would be more efficiently performed later, on the ground.

The models for scientific analysis might include dispersion theory, ray tracing, or true-height algorithms. Simpler ones might include frequency relationships for resonances and nonlinear phenomena, geometrical relationships for maneuvering, or scale-height determination from local plasma measurements.

Their use will be twofold: First, pertinent quantities could be calculated from scaled wave data, with, or without, inputs from other measurements. Second, model signatures could be calculated to guide interpretation or to be adjusted so that they match actual signatures. The latter is a powerful technique for quickly extracting information from the sort of data the wave experiments will develop.

The ultimate scientific function would be automatic pattern matching, wherein the computer would do its own interpretation and matching of signatures. Unfortunately, we are ill prepared

for this now. Beyond suggesting the possibility, our previous experiments haven't provided the experience that would be needed.

It must be emphasized that the software is part of the facility. This applies to all three of our software areas: control, processing, and analysis. In each, only a relatively small kernel program will be required for a specific wave experiment. The bulk of the software will be a reservoir of subroutines, each implementing a different function we may need. A substantial fraction of the instrumentation design effort will consist of filling the reservoir. We must not underestimate the magnitude of the task, nor the importance of doing it carefully.

Antenna. The most conspicuous aspect of wave experiments, and the most cumbersome, is their need for antennas. At the wavelengths involved, antennas must be large to be efficient. This is why radio experiments usually involve large antennas.

However, it should be clearly realized that antenna size is open to compromise. The need varies drastically with the nature of the experiment, and some very worthwhile wave experiments can be conducted with very modest antennas.

Large antennas are really essential only in experiments which depend upon high sensitivity at long wavelengths. They aren't essential in experiments where the signals are strong, such as in propagation to a nearby subsatellite or short-range sounding. Nor are they essential where additional transmitter power or integration can be used to compensate for an inefficient antenna. In some cases, like sounding in a noisy environment, antenna efficiency isn't a factor and larger antennas aren't even beneficial.

We should therefore be prepared to use a variety of different antennas, depending on the situation. This is particularly true on the Orbiter, where capabilities are vast but constraints are severe.

An obvious and desirable antenna for the Orbiter would be

a dipole extending laterally from both sides of the payload bay, near the front. It would be electrically and mechanically balanced. There will be some interaction with the wings, but otherwise it whould be well-behaved. With a suitable extension and retraction mechanism, experiments could be conducted with different lengths, and long lengths could be achieved.

An alternative monopole antenna is also attractive. It could extend upward and rely upon the large Orbiter body for its counterpose. The polarization and radiation pattern would be hard to control, but this should hamper few experiments. Its main advantage is that it requires only one extension mechanism, with half the weight and touble of two.

It might even be possible to use a manipulator arm or a boom as a monopole antenna, provided it could be insulated at wave frequencies. If so, the need to deploy disappears entirely.

With Spacelab installed, the front end of the payload bay, above the access tunnel, is nearly vacant. It has to remain so because of center-of-gravity constaints. This provides a unique opportunity for an unobtrusive antenna. A horizontal monopole or folded monopole could be installed in this vacant space, running fore-and-aft just below where the bay doors meet. A length of six meters is available, more than one meter away from obstructions. Of course it wouldn't be optimum, but it should be satisfactory for sounding at frequencies above 1 MHz, or for transmitting to a subsatellite at even lower frequencies. In spite of its limitations, this antenna would be so economical and unobtrusive that it should be given serious consideration.

Antennas on a boom or manipulator arm will have to be small and light, only a few meters in size. Otherwise the cost of sufficient strength to absorb maneuvering torques will be prohibitive. Such antennas might be carried aloft fully constructed to minimize the cost of deployment.

In certain experiments which must measure polarization and direction of arrival, we will require magnetic antennas and multiple antennas. Up to six could be used, consisting of an

electric and magnetic sensor for each axis. Such sophisticated experiments should probably be reserved for subsatellites, to avoid interaction with the Orbiter, or contamination by the noise it generates.

Configurations. A number of different configurations are possible for Shuttle wave experiments, depending on where we can mount antennas. The useful locations appear to be (1) in the payload bay, (2) extending from it, (3) on a boom, (4) on a manipulator arm, or (5) on a subsatellite. Antennas so located could be used alone for monostatic measurements, or in pairs for bistatic measurements.

The payload bay is best for heavy antennas or experiments requiring high power. However, it is worse from the standpoint of interference. Thus antennas in or at the payload bay should be used primarily for (1) the source in bistatic experiments and (2) support sounding, where power can be used to overcome interference.

Suitable experiments for a boom or arm would be local plasma measurements or others requiring only limited reception sensitivity. It will not be practical to carry large enough antennas, nor have a boom of really sufficient length, to permit high-sensitivity work. On the other hand, the antennas will be riding on a pointable platform, and so accurate polarization and direction-of-arrival measurements would be simple.

Bistatic experiments, from the payload bay to a boom, will also be awkward. The path is too short for most waves, except certain slow electrostatic and cyclotron modes. It will be difficult to eliminate interaction with the boom, since it will parallel the propagation path. Finally, the plasma will be perturbed by the Orbiter body and the boom, so it may be neither uniform nor representative of the ambient plasma.

A subsatellite is the ideal location for wave antennas. It would be free of Orbiter interference, and it could deploy the large antenna systems needed for high sensitivity.

The best configuration for new Shuttle wave experiments

is bistatic, using the Orbiter to transmit and a subsatellite to receive. The former could have a minimal antenna, but plenty of power, while the latter could have a good antenna for high sensitivity. It would provide a well-defined propagation path, variable and long enough to be useful. Both ends should be instrumented to transmit and receive, so they could be used independently for support measurements.

## Z-O COUPLING EXPERIMENT

The following wave experiment is included as a specific example. It was chosen because it is related to a topic of current interest, and because it takes advantage of the subsatellite and manned capabilities of Shuttle.

Abstract. Shuttle wave experiments should include measurements of Z-O coupling. In this phenomenon, wave energy can tunnel between the O-mode and the internal Z-mode where the two are adjacent. This coupling region could be an escape portal for terrestrial kilometric radiation (TKR), allowing the release of energy which began in Z-mode instabilities. The experiment would mock the flight of TKR energy by transmitting from the Orbiter in one mode and receiving at a subsatellite in the other mode.

Background. Among the distinct modes for electromagnetic waves in a magnetoplasma, the Z-mode deserves special interest. It is an internal mode, bounded by resonance and cutoff within the plasma. It is subject to strong wave-particle instabilities near its resonance, where the waves are slow enough to resonate with particle velocities.

If there were no escape mechanism for Z-mode waves, the instability energy would eventually be re-absorbed and remain inside the plasma. A non-thermal distribution of particles could then cause only a local, non-thermal enhancement of the Z-mode wave energy. It would not produce emissions observable from outside the plasma.

Z-O coupling provides an escape mechanism. Near the plasma frequency, the Z-mode and the O-mode have similar polarization and wavelength. If the plasma density gradient is sufficiently steep, the spatial distance between the two modes can be short enough for energy to tunnel, as an evanescent wave, across the gap where propagation is prohibited.

The Z-O coupling mechanism has been invoked to explain

certain high-latitude ionograms, observed from the ground. These observations are called "triple-splitting" because the O and X cusps normally associated with layer penetration are joined by a third, corresponding to Z-mode cutoff. The explanation requires enhancement of the coupling by collisional damping, and it also requires scattering by ionospheric irregularities to produce an appropriate echo geometry.

Since the topside sounders were imbedded in the plasma, they observe the Z-mode directly. It appears as continuous traces, between the Z-mode cutoff and the upper hybrid resonance. It is a straightforward echo, and coupling is not involved. In fact, the topside studies revealed no evidence of Z-O coupling, no triple-splitting like that observed from the ground. The difference could be the different echo geometry, the reduced gradients, or the lack of collisional damping.

In general, Z-O coupling is important because it could affect the flow of energy in space plasmas. In particular, it could be involved in the escape of TKR energy.

Objective. We should seek to understand Z-O coupling sufficiently well to know the part it plays, or does not play, in the TKR phenomenon.

The first step is to measure the effective aperature of the coupling window. Is it large enough to explain the strength of TRK signals? Simple theory is pessimistic. Except for a narrow pencil of rays along the magnetic field, Z-mode waves are reflected back into the resonance cone, where their energy is absorbed. Measurements will reveal whether nature is equally pessimistic. They will show if an overlooked propagation effect could focus more energy through the window, or if the coupling theory is in need of an optimistic revision.

Next, the influence of irregularities needs to be assessed. Irregularities of plasma density are known to occur in the region of TKR escape, on a scale of wavelengths and very strong. Do they enhance coupling, or somehow channel Z-waves through the coupling window? The question of Z-O coupling in an

irregular plasma is an open one: no suitable theory, no suggestive experiments. The Shuttle measurements of Z-O coupling should thus include cases when irregularities are present.

Configuration. The experiment requires two vehicles to achieve a propagation path which intercepts the coupling region. Presumably, these will be the Orbiter and a subsatellite.

A typical operating frequency would be 1MHz, with a wavelength of 300 meters in the coupling region. The path between the two vehicles should be substantially longer, around 10 km.

The subsatellite should be used for reception, because of its quieter environment. If the transmitter on the Orbiter is designed to launch 100 watts, the margin above free-space transmission (30 microvolt/meter at subsatellite) would be 60 decibels. This would be sufficient to detect very weak coupling. Alternatively, part of the margin might be sacrificed to permit modest antennas on either the Orbiter or the subsatellite.

Since signal strength will be measured, it will be necessary to calibrate the antenna sensitivities, and to know the orientation of both vehicles. Likewise, it will be necessary to know the relative subsatellite location.

The wave equipment on both vehicles should be capable of sounding independently, to provide observations of the ambient medium, and to detect the presence of irregularities.

The frequency range where coupling might occur extends from the Z-mode cutoff ($L = 0$) at the high-density vehicle to the upper hybrid frequency ($S = 0$) at the low-density vehicle. The exact frequency depends in detail on the path geometry, and on the inclination of the magnetic field. It would be difficult to accurately select this frequency, and it will vary during the measurement. Thus the instrument will have to sweep to make sure the effect is captured. Since time will be short, it would be advantageous to restrict the sweep range as much as possible, according to onboard scaling of the support ionograms.

The Orbiter transmissions to the subsatellite should be pulsed so the coupling signals can be distinguished by their group delay, either from other signals or from one another. (At least two separate coupling signals are expected.)

Propagation Path. Z-O coupling occurs where the wave frequency equals the local plasma frequency. Also, the propagation vector ($\vec{k}$), for the waves which participate, must be parallel to the ambient magnetic field ($\vec{B}$). These two conditions define the coupling region, and the propagation path has to be chosen so that both are satisfied.

The gradient of plasma density ($\nabla\vec{N}$) also enters. It determines the width of the coupling gap, and it controls the refraction of waves to and from the coupling region.

A resonant wave-particle instability would deposit energy in the Z-mode resonance cone, where the refractive index is large. The wave frequency would be somewhere between the local plasma frequency (or cyclotron frequency if that's greater) and the local upper-hybrid frequency. The Z-O coupling region for such waves lies further into the plasma, at a greater plasma density. Therefore, the waves have to propagate inward first, to reach a coupling region through which they can escape.

Propagation to the coupling region involves oblique propagation, where $\vec{B}$ and $\nabla\vec{N}$ are in different directions. The simpler case, where they are parallel, is not sufficient. A certain angle is required for waves in the resonance cone to reach the coupling region. Besides, alignment of $\vec{B}$ and $\nabla\vec{N}$ is unlikely to occur where TKR is generated, nor would it be easy to find a place in the ionosphere where they would be aligned for the experiment.

Figure 4 is a qualitative sketch of the ray paths for coupling. There are two paths by which waves in the resonance cone can reach a coupling region: (1) A path which is reflected near the Z reflection level and encounters the coupling region on its outward leg, and (2) a direct path, which only briefly penetrates the coupling level. Both of these paths,

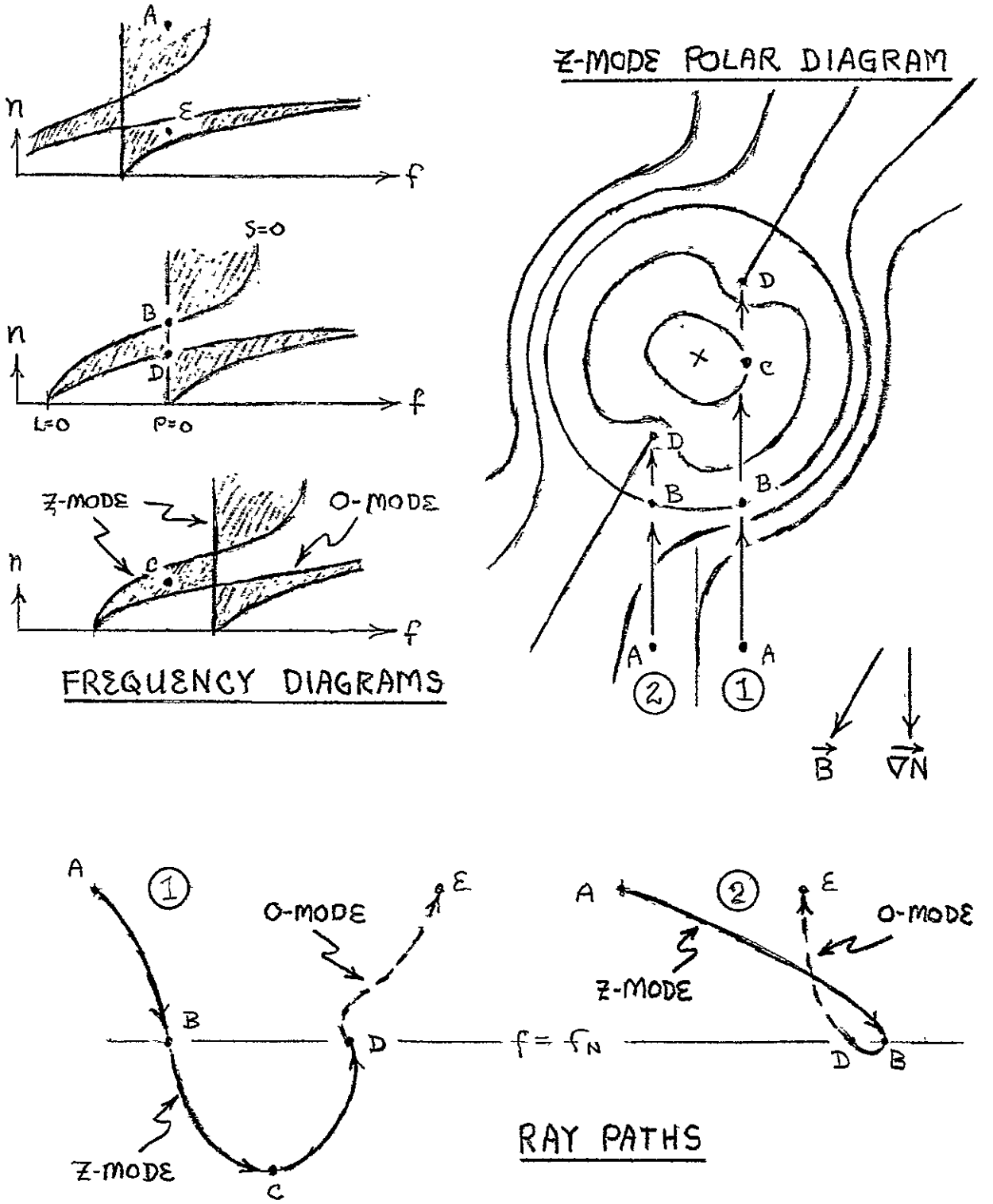


FIGURE 4. RAY PATHS FOR Z-O COUPLING

(Qualitative sketch, showing (1) reflected and (2) direct Z paths. Coupling occurs at point D).

of course, lie in the magnetic meridian. In Figure 4, the letters A through E designate waves at the same frequency but at different points along a coupling path. The frequency diagrams show how long-wavelength z-mode energy at A has to propogate inward to B and back out to D before coupling can occur.

The measurements of coupling should be carried out for both reflected and direct Z-mode waves. The simple concept of one vehicle on either side of the coupling region applies only to the former. For this special case, one vehicle would be between C and D and the other vehicle between D and E. It is unique because it permits operating at a frequency where only the coupled signal will occur, and interpretation will be easiest. For the direct waves, the loop, B to D, is small, and both behicles would have to be on the same side of the coupling region: outside, in the plasma of lower density.

In the horizontal ionosphere, a vertical separation is required to observe coupling for reflected waves. The inclination should be somewhat steeper than the magnetic field, at an angle which could be predicted by ray-tracing calculations. The same vehicle placement would also reveal direct coupling, at a higher frequency, but a more horizontal path would be better. In either case, both vehicles should lie in nearly the same magnetic meridian, and sweeps through the meridan should be executed to scan the lateral aperature of the coupling region.

Because of the need for a density gradient, coupling experiments should be carried out well above or below the F-layer peak. The steep gradients below the peak would be advantageous, but collisional damping may interfere. If possible, coupling measurements should be performed at both altitudes.

Operation. The most demanding operational requirement will be launching the subsatellite and maneuvering to establish an appropriate propagation path. Frequent maneuvering may be required to maintain the geometry on subsequent orbits, or to

alter the geometry for different cases.

Coupling measurements will be needed for both smooth and irregular ionospheres. The former can be found during daytime at the equator or at low mid-latitudes. Irregularities occur at night and at higher latitudes.

A payload specialist will be needed to interpret ionograms and establish the experimental parameters accordingly. Primarily, he will have to identify the signatures for the Z cutoff frequency and the upper hybrid frequency, to determine the frequency range which should be covered. He will need to identify certain kinds of ionospheric irregularities to decide when some phases of the experiment should be conducted. He may also be called upon to evaluate the coupling observations, to decide how the measurements should be continued.

Analysis. The object will be to compare the observations of coupled signal strengths with those predicted by theory. It will be necessary to produce parameters for the theory, and to eliminate certain factors like antenna orientation or refraction in the ionosphere.

The steps in the data analysis might be as follows:

1. Ambient medium:
   a. Scale ionograms.
   b. Determine magnetic field from magnetometer or model.
   c. True-height calculations.
   d. Calculate $\nabla\vec{N}$.
   e. Estimate strength and kind of irregularities.
2. Data Reduction:
   a. Calibrate antennas and determine orientation.
   b. Ray tracing for refractive correction.
   c. Calculate transmission efficiency from observed signals.
3. Comparison:
   a. Calculate transmission from model.
   b. Compare with observations.
   c. Draw conclusions about TKR and/or the theoretical model.

A theoretical effort should accompany the Shuttle measurements. It should seek to broaden coupling theory to include the oblique situation and the influence of irregularities. There should also be a ray-tracing study to predict propagation paths for Shuttle and to ascertain how the geometrical constraints of Z-O coupling would show up in the TKR observations.

## REFERENCES


1 T. H. Stix, The Theory of Plasma Waves, McGraw-Hill, 1962.
W. P. Allis, S. J. Buchsbaum, and A. Bers, Waves in Anisotropic Plasmas, The MIT Press, 1963.

2 J. A. Ratcliffe, The Magneto-Ionic Theory, Cambridge University Press, 1959.

2a ibid, p. 126.

3 K. G. Budden, Radio Waves in the Ionosphere, Cambridge University Press, 1961.
J. A. Ratcliffe, An Introduction to the Ionosphere and Magnetosphere, Cambridge University Press, 1972.

4 E. R. Schmerling and R. C. Langille (eds.), Special Issue on Topside Sounding and the Ionosphere, Proc. IEEE, 57(6), 1969.

4a E. L. Hagg, E. J. Hewens, and G. L. Nelms, ibid, p. 949.

4b J. E. Jackson, ibid, p. 976.

4c R. E. Barrington, ibid, p. 1036.

4d J. A. Findlay and L. H. Brace, ibid, p. 1054.

4e W. Calvert and J. R. McAfee, ibid, p. 1089.

4f D. B. Muldrew, ibid, p. 1097.

5 D. B. Muldrew, Electron Resonances Observed with Topside Sounders, Radio Sci., 7, 779-789, 1972.

6 R. A. Helliwell, Whistlers and Related Ionospheric Phenomena, Stanford University Press, 1965.

7 D. L. Carpenter, Whistler Evidence of a 'Knee' in the Magnetospheric Ionization Density Profile, J. Geophys. Res., 68, 1675-1682, 1963.
D. L. Carpenter and C. G. Park, On What Ionospheric Workers Should Know about the Plasmapause-Plasmasphere, Rev. Geophys. Space Phys., 11(1), 133-154, 1973.

8 D. A. Gurnett, The Earth as a Radio Source: The Nonthermal Continuum, J. Geophys. Res., 80(19), 2751-2764, 1975.

9 P. Palmadesso, T. P. Coffey, S. L. Ossakow, and K. Papadopolos, Generation of Terrestrial Kilometric Radiation by a Beam-Driven Electromagnetic Instability, J. Geophys. Res., 81(10), 1762-1770, 1976.

D. Jones, Source of Terrestrial Non-Thermal Radiation, Nature, 260(5553), 686-689, 1976.

R. F. Benson, Source Mechanism for Terrestrial Kilometric Radiation, Geophys. Res. Letters, 2(2), 52-55, 1975.

10 N. Brice, Wave-Wave Coupling in Multiple-Ion Plasmas, J. Geophys. Res., 79(16), 2519-2520, 1974.

11 D. G. Cartwright and P. J. Kellogg, Observations of Radiation from an Electron Beam Artificially Injected into the Ionosphere, J. Geophys. Res., 79(10), 1439-1457, 1974.

12 R. M. Hill and D. E. Kaplan, Cyclotron Resonance Echo, Phys. Rev. Letters, 14, 1062, 1965.

13 C. Stormer, Nature, 122, 681, 1928.

B. Van der Pol, Nature, 123, 878, 1929.

14 P. J. Duffett-Smith, An Automated Search for Radio Echoes of Long Delay at 7, 9, and 20 MHz, J. Atmos. Terr. Phys., 37(3), 455-460, 1975.

15 F. W. Crawford, D. M. Sears, and R. L. Bruce, J. Geophys. Res., 75, 7326, 1970.

16 M. L. Kaiser and J. K. Alexander, Source Location Measurements of Terrestrial Kilometric Radiation Obtained from Lunar Orbit, Geophys. Res. Letters, 3(1), 37-40, 1975.

17 W. Heikkila, N. Eaker, J. A. Fejer, K. R. Tipple, J. Hugill, D. E. Schneible, and W. Calvert, Comparison of Several Probe Techniques for Ionospheric Electron Concentration Measurements, J. Geophys. Res., 73, 3511-3535, 1968.