General Disclaimer

One or more of the Following Statements may affect this Document

- This document has been reproduced from the best copy furnished by the organizational source. It is being released in the interest of making available as much information as possible.

- This document may contain data, which exceeds the sheet parameters. It was furnished in this condition by the organizational source and is the best copy available.

- This document may contain tone-on-tone or color graphs, charts and/or pictures, which have been reproduced in black and white.

- This document is paginated as submitted by the original source.

- Portions of this document are not fully legible due to the historical nature of some of the material. However, it is the best reproduction available from the original submission.

Produced by the NASA Center for Aerospace Information (CASI)

NASA TM X-73589

MAR 1977
RECEIVED
NASA STI FACILITY
INPUT BRANCH

CATALYTIC COMBUSTION FOR THE AUTOMOTIVE GAS TURBINE ENGINE

(NASA-TM-X-73589) CATALYTIC COMBUSTION FOR THE AUTOMOTIVE GAS TURBINE ENGINE (NASA) 23 p HC A02/MF A01 CSCL 21A
N77-18443
Unclas
G3/37 17209

by David N. Anderson, Robert R. Tacina, and Thaddeus S. Mroz
National Aeronautics and Space Administration
Lewis Research Center
Cleveland, Ohio 44135

TECHNICAL PAPER to be presented at the
Fourth International Symposium on Automotive Propulsion Systems
sponsored by the NATO Committee on the Challenges of Modern Society
Washington, D. C., April 17-22, 1977

ABSTRACT

A study of fuel injectors to provide a premixed prevaporized fuel-air mixture and an evaluation of commercial catalysts were performed as part of a program leading to the demonstration of a low-emissions combustor for an automotive gas turbine engine. At an inlet temperature of 800 K, a pressure of 5×10^5 Pa and a velocity of 20 m/s a multiple-jet injector produced less than ±10 percent variation in Jet-A fuel-air ratio and 100 percent vaporization with less than 0.5 percent pressure dorp. Fifteen catalytic reactors were tested with propane fuel at an inlet temperature of 800 K, a pressure of 3×10^5 Pa and inlet velocities of 10 to 25 m/s. Seven of the reactors had less than 2 percent pressure drop while meeting emissions goals of 13.6 gCO/kg fuel and 1.64 gHC/kg fuel at the velocities and exit temperatures required for operation in an automotive gas turbine engine. NO_x emissions at all conditions were less than 0.5 ppm. All tests were performed with steady-state conditions.

E-9052

CATALYTIC COMBUSTION FOR THE AUTOMOTIVE GAS TURBINE ENGINE

by David N. Anderson, Robert R. Tacina, and Thaddeus S. Mroz

National Aeronautics and Space Administration
Lewis Research Center
Cleveland, Ohio 44135

E-9052

SUMMARY

A study of fuel-air premixing-prevaporizing systems and commercial catalysts was performed as part of a program leading to the demonstration of a low-emissions combustor for an automotive gas turbine engine. The goals included a fuel preparation system which would supply a fuel-air mixture which was uniform to within ±10 percent of the mean fuel-air ratio, with 90 percent fuel vaporization and with no autoignition. The catalytic reactor was required to produce emissions which were low enough to meet the most stringent proposed U.S. automotive standards. The overall pressure drop for both systems was to be less than 3 percent, with 1 percent allowed in the fuel-air preparation system and the remainder in the catalytic reactor.

The engine conditions included a combustor inlet temperature range of 970 K at full speed to 1210 K at idle, a combustor exit temperature of 1310 K at all speeds, and a pressure range of 1.5×10^5 Pa at idle to 4.5×10^5 Pa at full speed. The maximum available inlet temperature in the test rig was 800 K; however, it was possible to duplicate the other operating parameters.

For the fuel-air preparation studies, a pressure of 5×10^5 Pa was considered the most likely to cause autoignition. Four fuel injector configurations were tested at this pressure, at a temperature of 800 K, and a reference velocity of 20 m/s with Jet-A fuel. Jet-A is a typical gas turbine fuel. A multiple-jet injector produced the required fuel-air distribution and vaporization with only 0.5 percent pressure drop. No autoignition occurred in a 35-cm length at these conditions; however, at the higher inlet temperatures of the regenerative gas turbine engine, autoignition will probably be the most serious problem to be solved.

For the catalyst evaluation, a pressure of 3×10^5 Pa was chosen to represent the regenerative gas turbine engine pressure range, and propane fuel was used to avoid autoignition and vaporization problems. Fifteen catalytic reactors were tested at an inlet temperature of 800 K and with reference (inlet) velocities of 10 to 25 m/s. Seven reactors met the steady-stage emissions goals of 13.6 g CO/kg fuel and 1.64 g HC/kg fuel with less than 2 percent pressure drop at the velocities and exit temperatures required for engine operation. Inlet temperatures of 500 to 625 K were required before the catalysts were sufficiently active to

STAR category 45

combust the propane fuel.

INTRODUCTION

This paper describes studies which are intended to lead to the demonstration of a catalytic combustor for an automotive gas turbine engine.

The Lewis Research Center has established an ERDA-supported program with the goal of demonstrating an improved automotive gas turbine engine which operates with the combustor conditions shown in table 1 (ref. 1). With a turbine inlet temperature of 1310 K for all engine speeds, extensive use of ceramic components should not be required. The engine conditions of table 1 were defined by a computer analysis which predicted a combined EPA city-highway driving cycle fuel economy of 26.2 miles/gallon in a compact car (ref. 1). Also included in table 1 are reference velocities computed from the combustor inlet conditions for several combustor diameters. U. S. automotive emissions standards are defined for operation over a city driving cycle; for this cycle, the engine of reference 1 would have a fuel economy of about 22 miles/gallon. The most stringent standards proposed by the 1970 Clean-Air Act are 0.4 g NO_x/mile, 3.4 g CO/mile, and 0.41 g HC/mile. The Lewis program includes the evaluation of the catalytic combustor with the goal of achieving emissions which are half those of the most stringent proposed standards.

Catalytic combustion has the principal advantage over gas-phase combustion that lower combustion temperatures and, therefore, lower NO_x emissions are possible. The importance of combustion temperature to NO_x emissions is illustrated by figure 1 which is based on the prediction of a well-stirred reactor computer program (ref. 2). The assumptions made in preparing figure 1 included a vehicle fuel consumption of 0.0775 kg/km (about 22 miles/gallon fuel economy), a combustor operating with an inlet temperature of 970 K at a pressure of 5×10^5 Pa and no nitrogen bound to the fuel. Thermal NO_x emissions are shown as a function of the maximum combustion temperature achieved before dilution to an exit temperature of 1310 K. It is clearly advantageous to burn at the lowest possible temperature to limit NO_x emissions. The lowest temperature at which combustion can take place is determined by the lean flammability limit, which for hydrocarbon fuels occurs between flame temperatures of 1600 K (ref. 3) and 1800 K (ref. 4). Thus, for good stability, peak flame temperature should probably be maintained near 1900 K. Figure 1 shows that at this temperature, steady-state NO_x emissions should be only half the 0.4 g/mi proposed as a standard; lean premixed combustors have in fact been demonstrated with emissions low enough to meet this standard (ref. 5).

A way to react fuel and air at even lower flame temperatures is to use catalysis to augment the reactions. Catalytic combustion at reaction temperatures of 1300 to 1400 K has been shown to give good com-

bustion efficiency and produce thermal NO_x emissions which were several orders of magnitude below those of conventional combustors (refs. 6 to 9).

A schematic view of one possible catalytic combustor configuration is shown in figure 2. Fuel is injected upstream of the reactor to vaporize and mix with the inlet air. Autoignition must be avoided in this premixing section because the flame would tend to seat on the fuel injector and burn with locally high temperatures; high NO_x emissions and possible component damage could result.

The catalyst bed, or reactor, may consist of several sections, each made of a different kind of catalyst; it is desirable to use a catalyst which is active at low temperatures for the inlet while subsequent sections need to be selected for good oxidation efficiency. All sections must be durable at the reactor operating conditions. Downstream of the catalytic reactor a thermal reaction zone may be provided to permit catalytically-initiated reactions to continue. Such reactions have been shown to contribute as much as 20 percent of the total reactor temperature rise for some conditions (ref. 9). Finally, dilution of the reacted products to achieve the turbine inlet conditions may be necessary. Some method of starting the combustor will also be required, although none is shown in figure 2.

Successful fuel-air premixing systems have been demonstrated in earlier studies (ref. 10) and the potential of catalysis applied to low-emissions combustion has been shown (ref. 6 to 9 and 11). However, the development of the technology required to demonstrate a complete catalytic combustor has yet to be achieved, and an evaluation of both fuel-air preparation and catalyst performance in terms of particular engine requirements has not been made. The Lewis catalytic combustion program includes both fuel-air preparation studies and catalyst testing. The emissions goals are to be achieved while operating at the conditions shown in table 1 and with a combustor pressure loss of no more than 3 percent. Arbitrarily, a goal of 90 percent fuel vaporization and a fuel-air ratio uniform to within ±10 percent with no more than 1 percent pressure drop across the fuel preparation section was chosen.

Steady-state tests were performed in a 12-cm diameter combustion test rig at inlet temperatures of 450 to 800 K, pressures of 3 and 5×10^5 Pa, catalyst inlet velocities of 10, 15, 20, and 25 m/s and fuel-air ratios from 0.01 to 0.026. Jet-A, a typical gas-turbine fuel, was used in the fuel-air preparation studies, while vaporized propane fuel was used in the evaluation of catalysts to avoid the vaporization and autoignition problems associated with typical gas-turbine fuels.

FUEL PREPARATION STUDIES

Test Configuration

Fuel preparation systems were tested in the rig shown schematically in figure 3. The inlet airflow rate was measured with an ASME standard

square-edged orifice. The air was heated to temperatures as high as 900 K in a non-vititating preheater. The test section inlet duct was 10 cm in diameter with a 7.6 cm diameter insert to increase the velocity of the air. This section was followed by a straight-walled diffuser to increase the diameter to 12 cm. The Jet-A fuel flow was measured by two turbine flowmeters in series; the fuel was injected into the highest velocity region of the inlet duct (see fig. 3) to provide good atomization.

The fuel-air mixture was sampled 35.6 cm downstream of the fuel injector. Two probes were traversed along perpendicular diameters to obtain the spatial fuel distribution by iso-kinetic sampling at several positions. The sample from each probe was allowed to react in a catalyst bed maintained at 1030 K in an oven. The reaction products were then analyzed to determine the concentrations of CO, CO_2 and HC. These concentrations were used to compute the local fuel-air ratio at the sampling position. The degree of vaporization was also measured with these same probes using the spillover technique described in references 10 and 12.

Eighteen meters of electrically heated (410 to 450 K) 0.5 cm diameter stainless steel tubing connected the sampling probes with the exhaust gas analyzers. CO and CO_2 concentrations were measured with Beckman Model 315B nondispersive infared analyzers and unburned hydrocarbon concentration was measured with a Beckman Model 402 flame ionization detector. Water vapor was removed with a Hankinson Series E refrigeration-type dryer before the sample was analyzed for CO or CO_2, and corrections were made to obtain the actual, wet-basis, concentration. The concentrations of unburned hydrocarbons and CO were negligible.

The temperature and static pressure were measured upstream of the fuel injector and at the sampling station as shown in figure 3. A single Chromel-Alumel thermocouple was used in both locations.

Downstream of the sampling station, hydrogen was injected into the fuel-air stream to produce a flammable mixture. The mixture was burned to avoid discharging fuel into the atmosphere. A water quench cooled the exhaust before it discharged through a back-pressure valve.

Test Injectors

Four fuel injectors were evaluated: a multiple-jet injector, a splash-groove injector, a simplex pressure atomizer, and a Sonicore nozzle. The multiple-jet and splash-groove injectors are air-blast atomizers; that is, they rely on the relative momentum between fuel and air for atomization. The simplex pressure atomizer uses fuel pressure for atomization. The Sonicore nozzle is a commercially-available injector which depends on a high-velocity external air stream for atomization.

The multiple-jet cross-stream injector used 28 orifices of 0.37 mm diameter injecting into zones of approximately equal duct cross-sectional areas (see fig. 4(a)). The splash-groove injector (fig. 4(b)) was developed by Ingebo (ref. 13). Fuel is injected through 21 passages to impinge upon conical surfaces of the nozzle. Fine droplets are formed which are rapidly atomized by the air flow. The simplex nozzle was a Monarch 70-degree angle spray nozzle with a flow rating of 0.013 m^3/hour at 6.8×10^5 Pa differential pressure. The Sonicore nozzle (fig. 4(c)), Model 125MA, used an external air supply at 6.5×10^5 Pa pressure to provide a high-velocity airstream. The airstream impinges on the resonator cap, and fuel injected into the airstream forms a cone-shaped finely-atomized spray. The fuel-air ratio distribution provided by the splash-grove injector, the simplex nozzle, and the Sonicore nozzle were determined both with and without the concentric air swirler shown in figure 4(d). The 30-degree vane angle induced a swirl in the air flow to improve mixing between the fuel and the air.

Test Conditions

Tests were performed at inlet temperatures varying from 450 K to 800 K, a pressure of 5×10^5 Pa, fuel-air ratios of 0.01 and 0.025 and a reference velocity of 20 m/s. The reference velocity is computed from the inlet air temperature, pressure, and mass flow rate using the 12 cm diameter; thus, this velocity corresponds with that at the inlet to the catalytic reactor. The pressure and reference velocity are representative of those in table 7; however, the inlet temperature was not duplicated due to preheater limitations. The test pressure was chosen to be slightly higher than that in Table 7 in order to simulate the most severe condition for autoignition.

Results

The spatial fuel distribution, degree of vaporization and pressure drop were determined for each injector.

The fuel distribution along one diameter of the duct for the splash-groove injector is given in figure 5. The injector alone produced a very non-uniform profile; however, when the 30-degree-vane air swirler was mounted concentric with the injector, the fuel distribution became nearly uniform. Local values of the fuel-air ratio, calculated from the gas-analysis carbon balance, agreed within 10 percent of the average value determined from the metered fuel and air flows. Results obtained over the traverse perpendicular to that shown were essentially the same, and a nearly uniform profile was also obtained with the simplex and Sonicore nozzles when tested with the 30-degree-vane swirler. The multiple-jet injector gave a uniform profile without the necessity for air swirl. Tests conducted at inlet air temperatures of 500 and 600 K at both 0.01 and 0.025 fuel-air ratios suggested that these variables had no effect on the

uniformity of the mixture profile.

The effect of inlet air temperature on the degree of vaporization at the center of the duct is given in figure 6 for all four nozzles tested. None of the vaporization data were obtained with swirler-assisted nozzles. At any temperature, the best performance results were obtained with the multiple-jet and splash-grove injectors, although for the inlet temperatures of interest for this application, vaporization should approach 100 percent for all injector configurations.

The multiple-jet cross-stream injector, which used no air swirler, achieved the required fuel-air mixture uniformity and vaporization with only 0.5 percent pressure drop. The pressure loss for each of the other injectors was also about 0.5 percent when no air swirler was used, but was about 1 percent when the 30° air swirler was added.

CATALYST EVALUATION

Test Configuration

Catalysts were evaluated in the same 12 cm diameter combustion test facility used to test fuel-air preparation systems. Commercial grade propane fuel (91 percent pure by volume) was introduced as a vapor into the airstream through a single-orifice injector (ref. 9) 150 cm upstream of the test section. The resulting fuel-air ratio profile at the test section inlet was found to be uniform within ±10 percent of the mean.

Inlet and exit pressures were measured at wall static taps located 9 cm upstream and 12 cm downstream of the test section, respectively. For the test conditions of these experiments, total pressures are only about .2 percent higher than the static so no total pressure measurements were made. The pressure drops across the test section was measured with a differential pressure transducer between the inlet and exit static location.

A description of the catalyst evaluation test section is given in figure 7. The inlet temperature to the test section was taken as the average reading of the thermocouples in the 8- thermocouple array labelled number 1 in figure 7. Individual catalyst elements were located between pairs of the thermocouple arrays labelled 4-8 as shown in figure 7. The housing containing the catalyst elements was uncooled to limit heat loss; a downstream section containing a gas sampling probe and an additional 12-thermocouple array was water cooled, however.

The gas-sampling probe was also water cooled and had five 1.5 mm-diameter sampling orifices located in the center of equal cross-sectional areas as shown in figure 7. The use of small orifices along with copious

water cooling was found in previous testing to be necessary to insure that the CO concentration in the probe and sampling line is frozen at the sampling-station value.

In addition to the gas analysis instruments described in the Fuel-Air Preparation Section, these experiments also used a Thermo-Electron Model 10A Chemiluminescent analyzer to measure total NO_x emissions.

Test Catalysts

Twelve catalysts from four manufacturers were evaluated either singly or in combination to form a total of fifteen reactors. A description of the reactors is given in table 2 and specifications of the individual catalyst elements appear in table 3. Typical catalyst elements are pictured in figure 8. The two Johnson Matthey catalysts were 7.6 cm long and used a corrugated metal substrate wound into a cylinder as shown in figure 8; the remaining elements were all 2.5 cm long and had ceramic substrates. All catalysts were either platinum, palladium, or a mixture of the two.

Tests Performed

Two series of tests were made on the reactors: (1) a determination of the catalyst activation temperature (i. e., the inlet temperature at which the catalyst became sufficiently active to react most of the fuel), and (2) measurement of reactor emissions and pressure drop.

The catalyst activation temperature was found by increasing the inlet-air temperature in increments of 25 K, starting at 500 K, with a pressure of 2×10^5 Pa and a catalyst inlet velocity of 10 m/s. This pressure and velocity correspond approximately to those existing when the engine is being cranked during start-up. At each temperature, propane was introduced at an equivalence ratio of 0.3 while the reactor thermocouples were monitored. For inlet temperatures below the catalyst activation temperature, a small temperature rise across the bed (of as much as 15-20 K) was generally observed; however, when the inlet temperature was increased to the catalyst activation temperature, the bed and exit temperatures began to increase steadily for a period of about 2 or 3 minutes until a temperature rise of several hundred degrees across the bed was achieved.

To evaluate catalyst performance, exhaust emissions and pressure drop were measured with an inlet propane-air mixture temperature of 800 K, a pressure of 3×10^5 Pa and a range of inlet velocities of 10 to 25 m/s. It was not possible to simulate the combustor inlet temperature shown in table 1; however, the pressure and velocities are fairly representative of those at all engine speed settings.

Results

The catalyst activation temperatures are given in table 2. The G12P and G24D reactors were not available for this part of the testing. Testing was discontinued at 625 K with the OC16 and OCDS reactors when they produced only 15-20 K temperature rise. Activation tests performed on reactors which had only one kind of element showed that activation occurred at relatively low temperatures (500-550 K) with Pt catalysts (E11 and JM1 reactors) or when the catalyst was a mixture of equal amounts of Pt and Pd (G24 reactor). Higher temperatures were required for activation when the catalyst was either Pd (reactors E14, G17, and JM2) or a mixture with more Pd than Pt (reactors OC16 and OCDS). Reactors E1, E2, E3, E4 and G1 had low-activation temperature elements at the front of the reactor and high-activation-temperature elements following. Table 2 shows that these combinations had the low activation temperatures characteristic of their leading elements. Because propane was used for these tests, the activation temperatures which were determined may be higher than would result if Diesel, gasoline, or Jet-A had been used.

When the reactor performance and emissions were determined at 800 K inlet temperature, NO_x emissions were found to be less than 0.5 ppm for all test conditions. Actual values were difficult to measure accurately because the lowest range of the analyzer was 2.5 ppm full scale, while it was necessary to use a 100 ppm calibration gas. NO_x emissions should be well below levels required to meet the 0.4 g NO_x/mile standard, at least for propane fuel which has no fuel-bound nitrogen. Only the conditions for which the HC and CO emissions met the standards remained to be found.

Each reactor can be characterized by a minimum operating exit temperature. This temperature is the adiabatic reaction temperature (established by the fuel-air ratio and inlet temperature) at which the reactor must be operated to achieve the CO and HC emissions goals. Reaction temperatures higher than this minimum result in lower emissions of CO and HC. Although the automotive exhaust emissions standards are established for operation over a specific cycle which includes start-up and transient operation, conditions not duplicated in these tests, reference emission indexes can be computed from the standards to provide a guide in determining the minimum operating temperature. Assuming a vehicle fuel consumption of 0.0775 kg/km (about 22 miles/gallon fuel economy), 3.4 g CO/mile translates to 27.3 g CO/kg fuel and 0.41 g HC/mile becomes 3.29 g HC/kg fuel. The emissions goals for the program were half of these reference values, or 13.6 g CO/kg fuel and 1.64 g HC/kg fuel. A combustion efficiency of about 99.5 percent is required to achieve these goals.

Both pressure drop and minimum exit temperature are functions of the inlet velocity; therefore, the tradeoff between pressure drop and minimum exit temperature can be illustrated by plotting the re-

sults for each reactor as shown in figure 9. The pressure drop in figure 9 is that which was measured at a reaction temperature of 1400 K. The lines representing each inlet velocity were drawn arbitrarily through the results for the bulk of the best performing reactors tested. For inlet velocities of 10 and 15 m/s, the performance variation among all except the E11 and G24D reactors suggested only the effects of the tradeoff between pressure drops and minimum operating temperature. At higher velocities greater differences appeared. At 25 m/s the minimum exit temperature for reactors E11, F4, G1, OC16 and OCDS was in excess of 1550 K and was not determined.

One of the functions of a plot like that of figure 9 is to help in determining if the reactor can be operated at conditions which are consistent with both the program goals and the engine requirements. For example, a combustor with no dilution air flow and a 16 cm diameter reactor has catalyst inlet velocities of 15-17 m/s (table 1). The reactor exit temperature is required to be 1310 K with no dilution flow. Figure 9 shows that none of the reactors tested have minimum exit temperatures as low as 1310 K at 15 m/s and with less than 2 percent pressure drop. However, if 25 percent of the combustion air is used to dilute the products from the reactor, the reactor exit temperature increases and the inlet velocity decreases to the values shown in table 4. From figure 9 it can be determined that seven of the reactors tested would meet the program goals for both pressure drop and emissions while operating at the reactor conditions of table 4.

The results for reactor E11 (which used a Pt catalyst) illustrates that a reactor which activates at a low temperature (table 2) will not necessarily have good performance at higher temperatures (see fig. 9). In contrast, reactor E14 (which used a Pd catalyst) required a relatively high temperature to become active but performed well at higher temperatures. The best attributes of both reactors were obtained when elements from each reactor were combined to form reactor E1.

DISCUSSION

This study has successfully demonstrated both fuel-air preparation systems and catalytic reactors capable of operating within the pressure drop and emissions restraints of an improved automotive gas turbine engine. However, the results obtained cannot be applied directly to engine operation because of a number of considerations.

The inlet temperature at which the tests were conducted was limited by preheat capabilities to 800 K while the engine combustor inlet temperature varies from 970 to 1210 K. This higher temperature can be expected to affect the performance of the combustor in at

least two ways. The first effect is the increased tendency for autoignition of the fuel upstream of the catalyst. Although the fuel-air ratios of interest are well below the lean flammability limit and thus should not be susceptible to autoignition, locally richer mixtures exist near the fuel injector before complete mixing has taken place. Thus, mixing will have to be achieved in less than the ignition delay time. The autoignition delay time decreases exponentially with increasing inlet temperature and linearly with pressure (ref. 14). For the combustor conditions of table 1, the maximum inlet temperature occurs at the minimum pressure; as a result, the predicted range of ignition delay times is only 10.8 ms at 100 percent speed to 12.2 ms at idle. To keep the residence time with a flammable mixture below these values at the velocities shown in table 4, it is necessary that the mixing distance be less than 13.8 cm.

The second effect of operating at higher inlet temperatures should be a reduction in the reactor pressure loss. The pressure drop through the reactor is primarily due to frictional losses which are proportional to the product of mass flowrate and average reactor velocity. As the inlet temperature increases, the mass flowrate decreases because the reactor temperature rise is less for the same exit temperature. This effect of inlet air temperature may be offset by the losses incurred by the mixing of dilution air with products downstream of the reactor, however.

None of the catalytic reactors used in this study were subjected to durability tests. Each reactor was tested for 2 to 3 hours, and only the G12P reactor showed loss of activity after that time. Final selection of catalysts will have to be made on the basis of both performance and durability, however.

An evaluation of catalyst durability involving catalytic combustion at 1500 K exit temperature for a period of 1000 hours has been performed by Engelhard Industries under contract to Lewis (ref. 15). Parametric tests were performed with propane fuel at the start of durability testing and with both propane and Diesel fuel at the completion of 1000 hours of operation. The tests showed that after a period of high-temperature operation combustion of Diesel fuel may remain very efficient at conditions for which propane combustion efficiency has decreased drastically. The combustor exit temperatures shown in table 1 are lower than those tested by Engelhard, so loss of activity may not be as severe as that suggested by the Engelhard results. Tests of selected catalysts at the required reactor conditions for the desired lifetime will be needed before final catalyst selection can be made.

The Engelhard results suggest that Diesel fuel may be easier to combust than propane fuel. An additional advantage of Diesel fuel over propane is that its catalyst activation temperature is lower (ref. 16). On the other hand, NO_x emissions with Diesel fuel

may be higher as a result of fuel-bound nitrogen (ref. 17). Clearly, catalyst evaluation will have to be performed with typical gas turbine fuels like Jet-A or Diesel.

No transient tests were made in these studies. The ability of catalytic reactors to respond to changes in inlet conditions will be crucial to the success of the concept. It is likely that catalytic substrate materials which have high thermal conductivities and low thermal capacities such as metal or silicone carbide will be required to insure both rapid warm-up and quick response. Tests will also have to be made to determine if engine transients will induce conditions favorable to autoignition in the fuel-air mixing section.

The emissions produced during start-up and transient operation may be considerably higher than those produced at the steady-state conditions described in this paper. Because the emissions standards are based on operation over a cycle involving both start-up and transient conditions, a full evaluation of catalytic combustor feasibility cannot be made until tests can be performed at these conditions.

The practical operation of a catalytic combustor in an engine will require a method of heating the catalyst to its activation temperature for cold-engine-start conditions. Possible approaches include the use of a preburner or upstream torch with a spark igniter, an electrical heater to raise the catalyst substrate temperature directly, a downstream burner with a spark igniter, and possibly even the use of hydrogen fuel for starting. Whatever system is chosen would operate only until the combustor inlet temperature reached the catalyst activation temperature.

While this study has shown that catalytic combustion may be feasible for steady-state operation, final evaluation of the concept will depend on engine demonstration. For a full engine demonstration to take place considerably more technology development will be required, and engine demonstration with start-up and transient operation may well reveal additional problem areas requiring attention.

REFERENCES

1. Klann, J. L., and Tew, R. C., Jr., "Analysis of Regenerated Single-Shaft Ceramic Gas Turbine Engines and Resulting Fuel Economy in a Compact Car," proposed NASA Technical Memorandum.

2. Boccio, J. L., Weilerstein, G., and Edelman, R. B., "A Mathematical Model for Jet Engine Combustor Pollutant Emissions," GASL-TR-781, General Applied Science Labs., Inc., Westbury, NY, March 1973 (also NASA CR-121208).

3. Wade, W. A.; et al., "Low Emissions Combustion for the Regenerative Gas Turbine. Part I - Theoretical and Design Considerations," ASME Paper 73-GT-11 Apr. 1973.

4. Anderson, D. N., "Effect of Hydrogen Injection on Stability and Emissions of an Experimental Premixed Prevaporized Propane Burner," NASA TM X-3301, Oct. 1975.

5. Azelborn, N. A.; et al., "Low Emissions Combustion for the Regenerative Gas Turbine. Part II - Experimental Techniques, Results and Assessment," ASME Paper 73-GT-12, Apr. 1973.

6. Blazowski, W. S., and Bresowar, G. E., "Preliminary Study of the Catalytic Combustion Concept as Applied to Aircraft Gas Turbines," AFAPL-TR-74-32, Feb. 1974.

7. DeCorso, S. M., et al., "Catalysts for Gas Turbine Combustors-Experimental Test Results," ASME Paper 76-GT-4, Mar. 1976.

8. Wampler, F. B., Clark, D. W., and Gaines, F.A., "Catalytic Combustion of C_3H_8 on PT-Coated Monolith," Paper 74-36, Western States Section of the Combustion Institute, 1974.

9. Anderson, D. N., "Preliminary Results form Screening Tests of Commercial Catalysis with Potential Use in Gas Turbine Combustors. Part II - Combustion Test Rig Evaluation," NASA TM X-73412, May 1976.

10. Tacina, R., "Experimental Evaluation of Two Premixing-Prevaporizing Fuel Injection Concepts for a Gas Turbine Catalytic Combustor," NASA TM X-73422, May 1976.

11. Siminski, V. J., "Development of a Catalytic Combustor for Aircraft Gas Turbine Engines," AFAPL-TR-76-80, 1976.

12. Foster, H. H., and Ingebo, R. D., "Evaporation of JP-5 Fuel Sprays in Air Streams," NACA RME55K02, Feb. 1956.

13. Ingebo, R. D., and Norgren, C. T., "Combustor Exhaust Emissions with Air-Atomizing Splash-Groove Fuel Injectors Burning Jet-A and Diesel Number 2 Fuels," NASA TM X-3255, July 1975.

14. Marek, C. J., "Preliminary Studies of Autoignition and Flashback in a Lean, Premixed Flame Tube Using Jet-A Fuel," proposed NASA Technical Memorandum.

15. Heck, R. M., "Final Report Part I. Durability Testing at 1 atm of Advanced Catalysts and Catalyst Supports for Automotive Gas Turbine Engine Combustors " NASA CR-135132, 1977.

16. Carrubba, R. V., et al., "Catalytically-Supported Thermal Combustion for Emission Control," paper Presented at the Electric Power Research Institute NO_x Control Technology Seminar, San Francisco, Calif., Feb. 6, 1976.

17. Pfefferle, W. C., et al., "Catathermal Combustion: A New Process for Low-Emissions Fuel Conversion," ASME Paper 75-WA/Fu-1, Nov. - Dec. 1975.

TABLE 1. - AUTOMOTIVE REGENERATIVE GAS TURBINE ENGINE:

HYPOTHETICAL COMBUSTOR INLET CONDITIONS FOR AN IMPROVED ENGINE (Ref. 1)

Speed, % of full	Airflow, kg/s	Fuel flow, 10^{-3} kg/s	Pressure, 10^{5} Pa	Combustor inlet temperature, K	Combustor exit temperature, K	Reference velocity (m/s) for possible combustor diameter		
						14 cm	16 cm	18 cm
50 (idle)	0.127	0.455	1.43	1210	1310	19.8	15.1	12.0
60	.204	1.135	1.91	1140	1310	22.4	17.2	13.6
70	.254	1.705	2.28	1100	1310	22.6	17.3	13.6
80	.336	2.77	2.92	1045	1310	22.1	16.9	13.4
90	.409	3.84	3.56	1005	1310	21.2	16.3	12.8
100	.517	5.41	4.50	970	1310	20.5	15.7	12.4

Table 2. - CATALYTIC REACTOR DESCRIPTION

Note: The JMPt and JMPd elements are 7.6 cm long. All other elements are 2.5 cm long. A complete description of each element is given in Table 3.

Reactor designation	Catalyst elements				Catalyst activation temperature, K
	1	2	3	4	
E11	E1128	E1128	E1128	E1128	500
E14	E1412	E1412	E1412	E1412	580
E1	E1128	E1412	E1412	E1412	540
E2	E1128	←	JMPd	→	530
E3	E1128	G512:3.2	G524:290	G524:290	530
E4	E1128	OC3.6:N	OC1.8:1.6	OC1.8:1.6	550
G12P	G512:P	G512:P	G512:P	G512:P	NA
G17	G517:290	G517:290	G517:290	G517:290	600
G24	G524:290	G524:290	G524:290	G524:290	530
G24D	G524D:200	G524D:200	G524D:200	G524D:200	NA
G1	G512:3.2	G524:200	G524:200	------	540
JM1	------	←	JMPt	→	525
JM2	------	←	JMPd	→	620
OC16	OC1.8:1.6	OC1.8:1.6	OC1.8:1.6	OC1.8:1.6	>625
OCDS	OC3.6:S	OC3.6:S	OC3.6:S	OC3.6:S	>625

N.A.: Not available for these tests.

ORIGINAL PAGE IS
OF POOR QUALITY

TABLE 3. - DESCRIPTION OF CATALYST ELEMENTS

All elements are 12 cm diameter

Element designation	Catalyst manufacturer	Manufacturers designation	Catalyst	Catalyst loading, kg/m^3	Substrate manufacturer	Substrate composition	Cell density, cells, cm^2	Cell shape	Element length, cm
E1128	Engelhard	EVD 1128	Pt	*	Corning	Cordierite	35	Sine Wave	2.5
E1412	Engelhard	EVD 1412	Pd	*	Corning	Cordierite	35	Sine Wave	2.5
G512:3.2	W. R. Grace	Davex 512A	Pt/Pd:1/1	2.0	General Refactories	Mullite	10	Circular	2.5
G512:P	W. R. Grace	Davex 512A	Pt/Pd:1/1	5.3	Pure Carbon	Silicon Carbide	30	Sine Wave	2.5
G517:290	W. R. Grace	Davex 517	Pd	2.5	W. R. Grace	Cordierite	45	Square	2.5
G524:200	W. R. Grace	Davex 524A	Pt/Pd:1/1	3.5	W. R. Grace	Cordierite	31	Rectangular	2.5
G524:290	W. R. Grace	Davex 524A	Pt/Pd:1/1	3.5	W. R. Grace	Cordierite	45	Square	2.5
G524D:200	W. R. Grace	Davex 524A	Pt/Pd:1/1	6.5	W. R. Grace	Cordierite	31	Rectangular	2.5
JMPt	Johnson Matthey	-------	Pt	5.3	Johnson Matthey	Metal	62	Sine Wave	7.6
JMPd	Johnson Matthey	-------	Pd	5.3	Johnson Matthey	Metal	62	Sine Wave	7.6
OC1.8:1.6	Oxy-Catalyst	-------	Pt/Pd:1/2	1.8	General Refactories	Mullite	34	Circular	2.5
OC3.6:S	Oxy-Catalyst	-------	Pt/Pd:1/2	3.6	Norton	Silicon Carbine	11	Circular	2.5

*Proprietary

TABLE 4. - CATALYTIC REACTOR INLET CONDITIONS FOR IMPROVED ENGINE

DOWNSTREAM DILUTION, 25% OF TOTAL COMBUSTOR AIRFLOW
REACTOR DIAMETER, 16 cm
COMBUSTOR EXIT TEMPERATURE, 1310 K

Speed % full	Total air flow, kg/s	Total fuel flow, 10^{-3} kg/s	Reactor air flow, kg/s	Reactor f/a	Reactor inlet temperature, K	Reactor exit temperature, K	Pressure, 10^5 Pa	Reactor inlet velocity, m/s
50 (idle)	0.127	0.455	0.0952	0.00478	1210	1350	1.43	11.4
60	.204	1.135	.153	.00742	1140	1375	1.91	12.9
70	.254	1.705	.190	.00895	1100	1385	2.28	12.9
80	.336	2.77	.252	.0110	1045	1400	2.92	12.7
90	.409	3.84	.307	.0125	1005	1405	3.56	12.2
100	.517	5.41	.388	.0140	970	1425	4.50	11.8

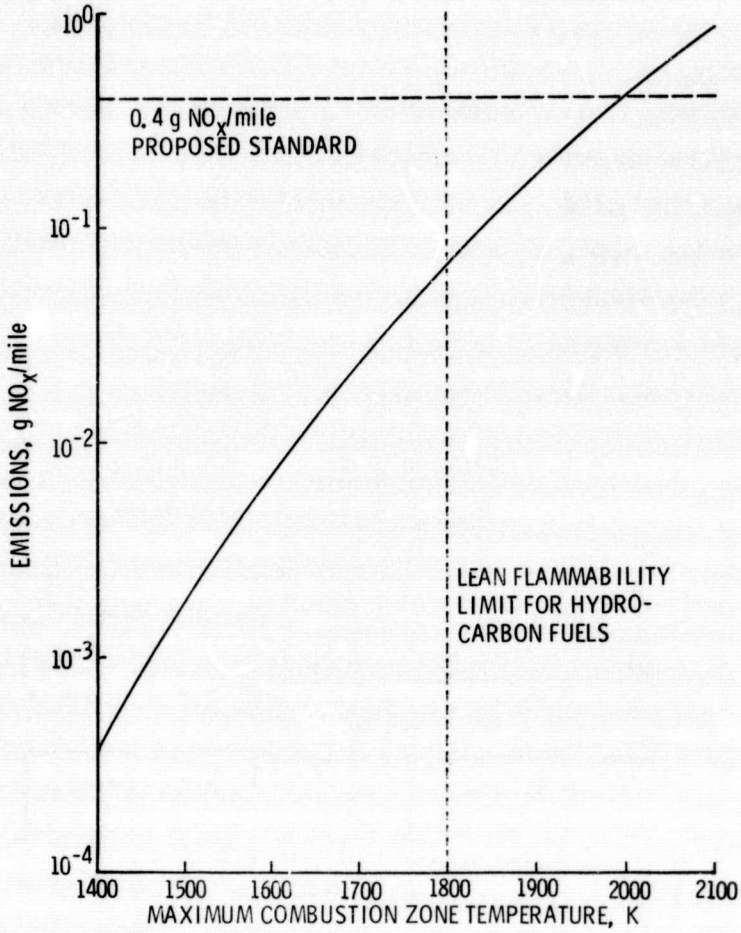

Figure 1. - Predicted thermal NO_x emissions from a well-stirred reactor (ref. 2). Combustor inlet temperature, 970 K; combustor exit temperature, 1310 K; combustor pressure, 5×10^5 Pa; vehicle fuel consumption, 0.0775 kg/km.

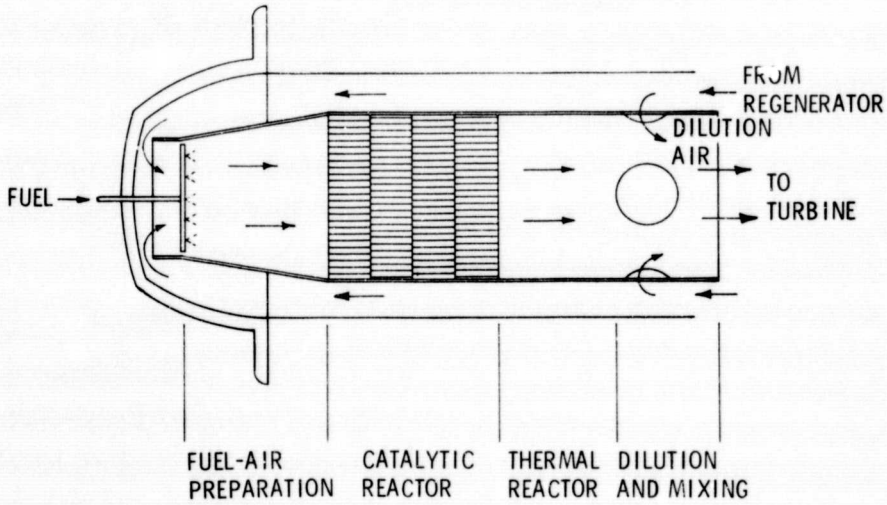

Figure 2. - Schematic representation of a catalytic reactor.

E-9052

PRECEDING PAGE BLANK NOT FILMED

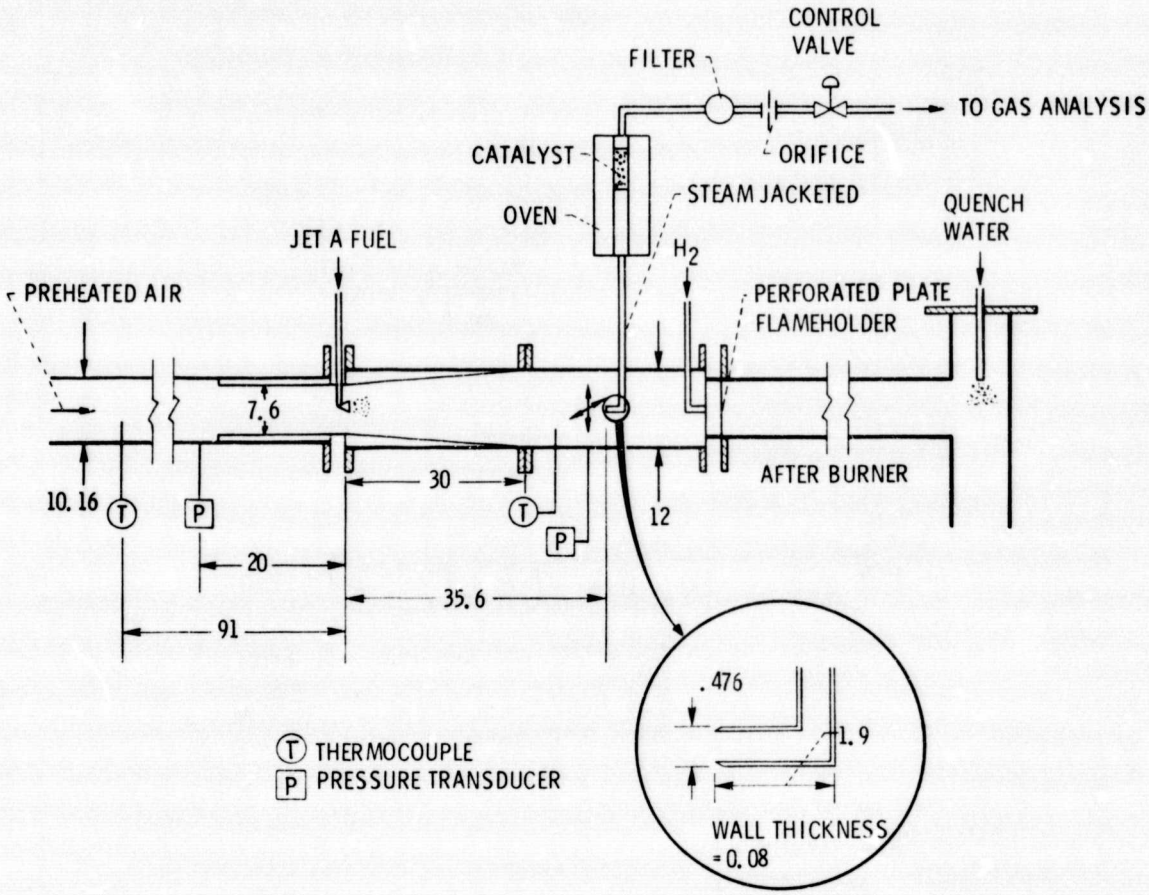

Figure 3. - Rig schematic. (Dimensions in cm.)

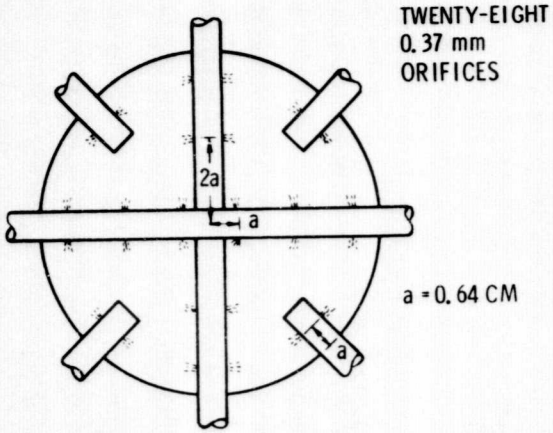

(a) Multiple-jet cross-stream injector.

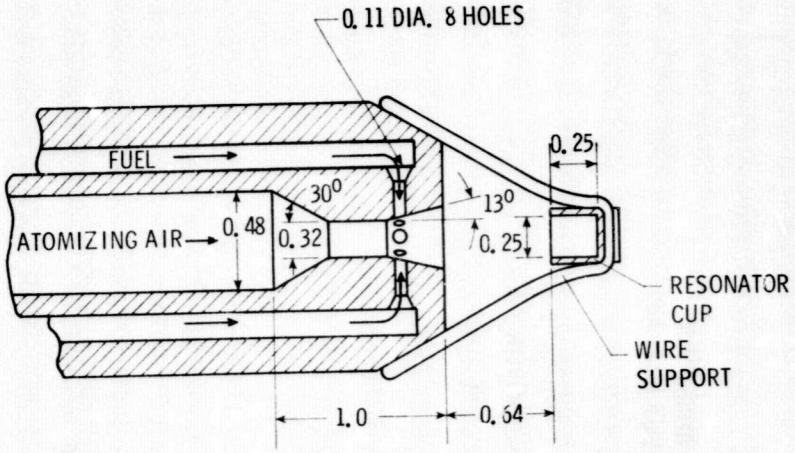

(c) Sonicore injector.

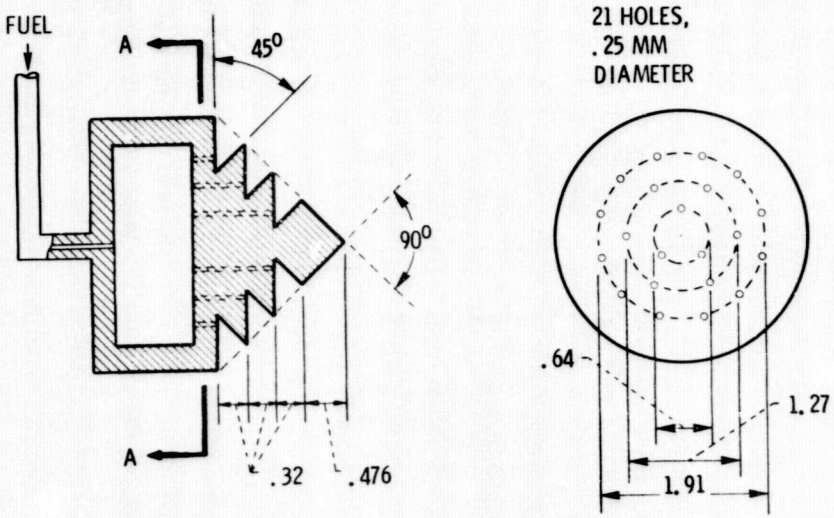

(b) Splash-groove injector.

Figure 4. - Test injectors. (Dimensions in cm.)

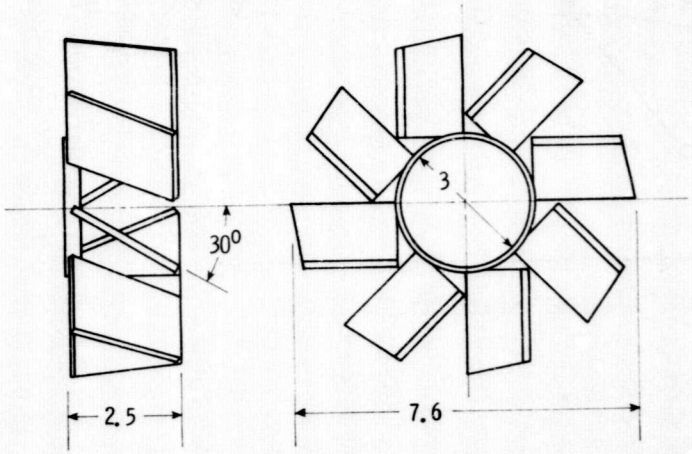

(d) Swirler used optionally with splash-groove injector, sonicore injector, and simplex pressure-atomizing nozzle.

Figure 4. - Concluded.

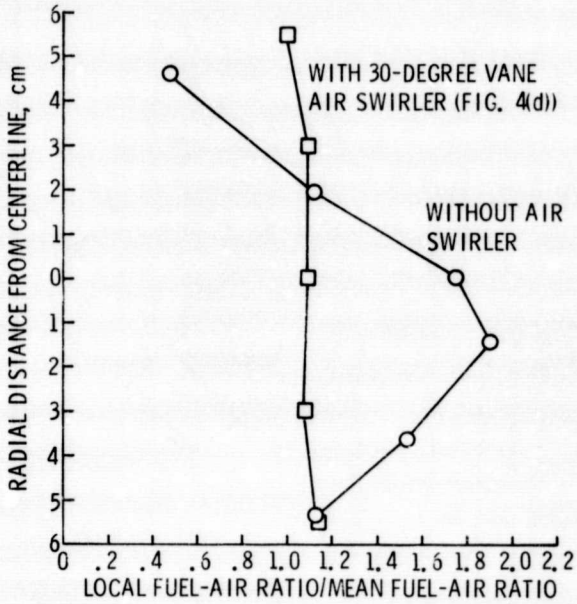

Figure 5. - Spatial fuel distribution. Inlet temperature, 800 K; pressure, 5×10^5 Pa; reference velocity, 20 m/s; mean (metered) fuel-air ratio, 0.01; splash-groove fuel injector.

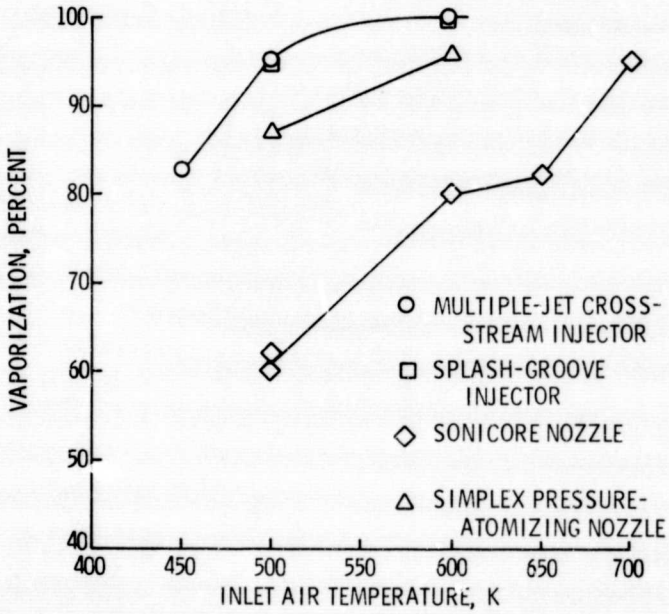

Figure 6. - Effect of inlet air temperature on degree of vaporization. Pressure, 5×10^5 Pa; reference velocity, 20 m/s; fuel-air ratio, 0.010.

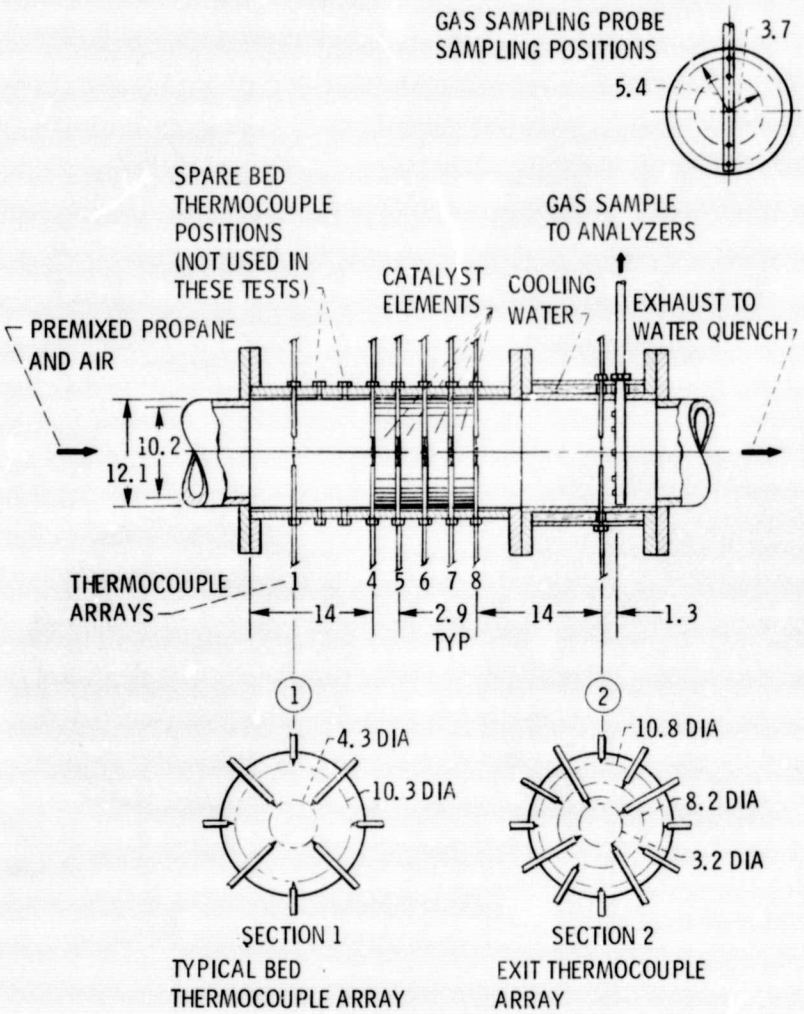

Figure 7. - Catalyst evaluation test section. (Dimensions in cm.)

E-9052

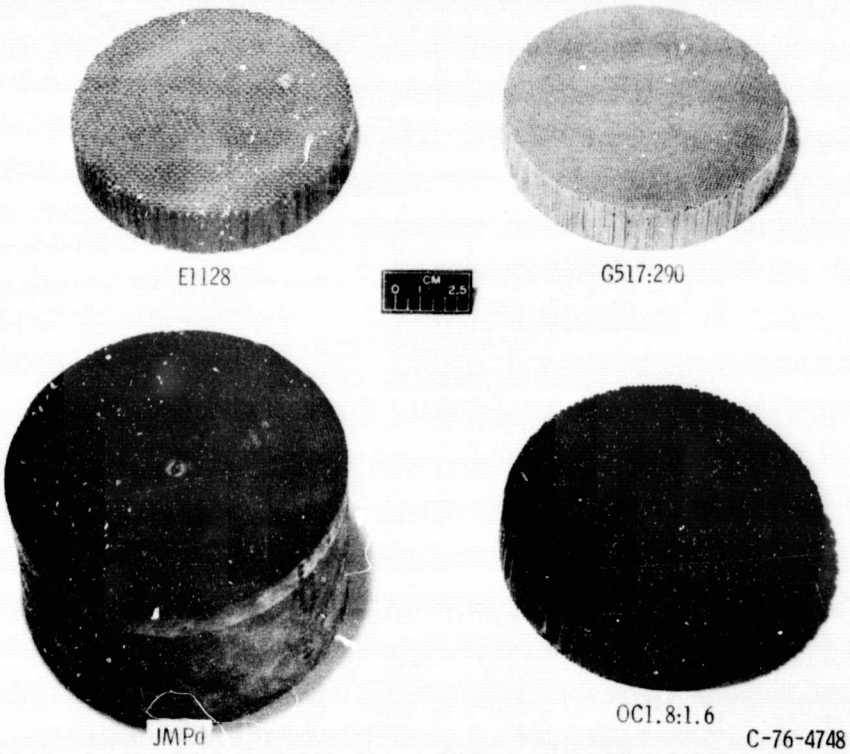

Figure 8. - Typical catalyst elements.

ORIGINAL PAGE IS
OF POOR QUALITY

E-9052

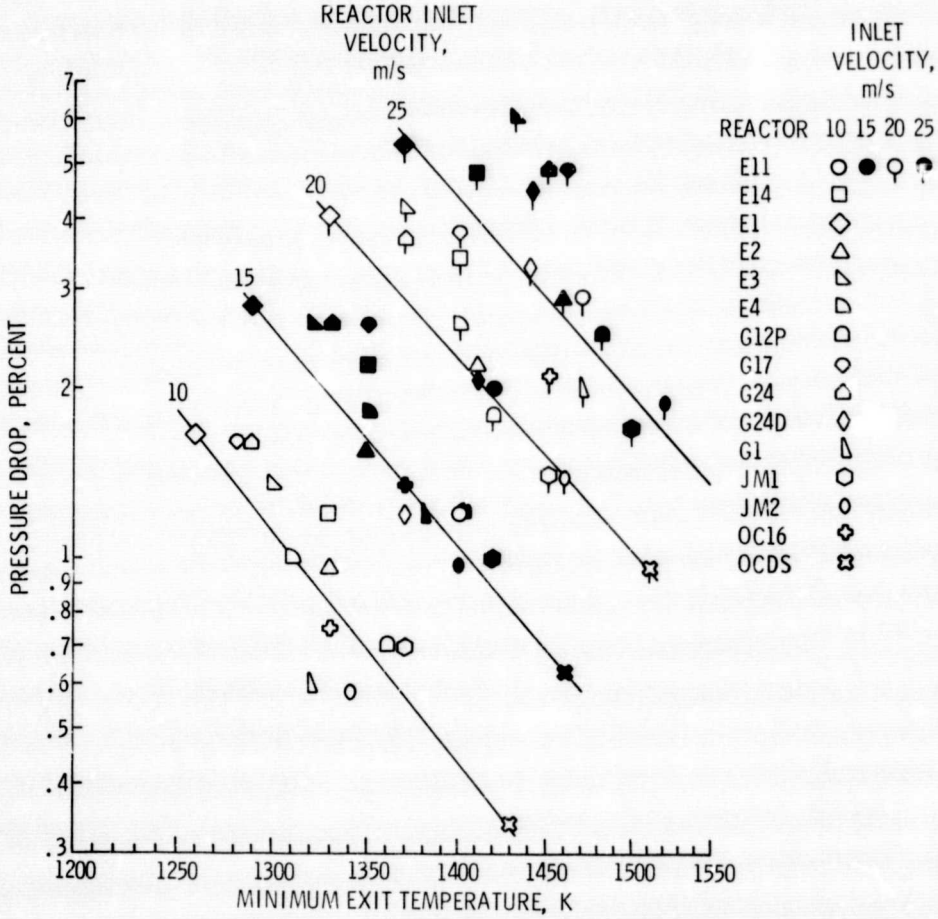

Figure 9. - Tradeoff between pressure drop at 1400 K and minimum required exit temperature. Inlet mixture temperature, 800 K; pressure, 3×10^5 Pa; propane fuel.