General Disclaimer

One or more of the Following Statements may affect this Document

- This document has been reproduced from the best copy furnished by the organizational source. It is being released in the interest of making available as much information as possible.

- This document may contain data, which exceeds the sheet parameters. It was furnished in this condition by the organizational source and is the best copy available.

- This document may contain tone-on-tone or color graphs, charts and/or pictures, which have been reproduced in black and white.

- This document is paginated as submitted by the original source.

- Portions of this document are not fully legible due to the historical nature of some of the material. However, it is the best reproduction available from the original submission.

Produced by the NASA Center for Aerospace Information (CASI)

NASA TECHNICAL MEMORANDUM

NASA TM X-73366

(NASA-TM-X-73366) TECHNICAL ASSESSMENT OF HIGH ENERGY ASTRONOMY OBSERVATORY-B (HEAO-B) ATTITUDE CONTROL AND AND DETERMINATION SUBSYSTEM (ACDS) (NASA) 301 p HC A14/MF A01 CSCL 22B G3/15 N77-19141 Unclas 21603

TECHNICAL ASSESSMENT OF HIGH ENERGY ASTRONOMY OBSERVATORY-B (HEAO-B) ATTITUDE CONTROL AND DETERMINATION SUBSYSTEM (ACDS)

By S&E HEAO-B ACDS Review Team
S. M. Seltzer, Chairman

December 1976

MAR 1977
RECEIVED
NASA STI FACILITY
INPUT BRANCH

NASA

George C. Marshall Space Flight Center
Marshall Space Flight Center, Alabama

TECHNICAL REPORT STANDARD TITLE PAGE

1. REPORT NO. NASA TM X-73366	2. GOVERNMENT ACCESSION NO.	3. RECIPIENT'S CATALOG NO.
4. TITLE AND SUBTITLE Technical Assessment of High Energy Astronomy Observatory-B (HEAO-B) Attitude Control and Determination Subsystem (ACDS)		5. REPORT DATE December 1976
		6. PERFORMING ORGANIZATION CODE
7. AUTHOR(S) S& E HEAO-B ACDS Review Team		8. PERFORMING ORGANIZATION REPORT #
9. PERFORMING ORGANIZATION NAME AND ADDRESS George C. Marshall Space Flight Center Marshall Space Flight Center, Alabama 35812		10. WORK UNIT NO.
		11. CONTRACT OR GRANT NO.
12. SPONSORING AGENCY NAME AND ADDRESS National Aeronautics and Space Administration Washington, D.C. 20546		13. TYPE OF REPORT & PERIOD COVERED Technical Memorandum
		14. SPONSORING AGENCY CODE

15. SUPPLEMENTARY NOTES

Prepared by S& E HEAO-B ACDS Review Team

16. ABSTRACT

In July 1976, a Team of MSFC Science and Engineering personnel was formed to assess the technical adequacy of the High Energy Astronomy Observatory-B (HEAO-B) Attitude Control and Determination Subsystem (ACDS). As a result of their analysis of the ACDS, the Team found no reason why the ACDS will not perform its specified activities adequately. The Team's activities culminated in their participation in the HEAO-B Critical Design Review.

17. KEY WORDS		18. DISTRIBUTION STATEMENT	
19. SECURITY CLASSIF. (of this report) Unclassified	20. SECURITY CLASSIF. (of this page) Unclassified	21. NO. OF PAGES 301	22. PRICE NTIS

MSFC - Form 3292 (Rev December 1972)

For sale by National Technical Information Service, Springfield, Virginia 22151

TABLE OF CONTENTS

		Page
SUMMARY		1
I.	INTRODUCTION	4
II.	DEFINITION OF ACDS	5
III.	TEAM APPROACH	7
IV.	TEAM ACCOMPLISHMENTS	8
V.	TEAM FINDINGS	9
VI.	ASSESSMENT OF ACDS AND ALLIED SUBSYSTEMS	14
	A. Hardware Assessment	14
	B. Structural Dynamics Assessment	21
	C. Pointing, Maneuvering, and Momentum Management Assessment	22
	D. Assessment of Control Laws and Stability	25
	E. Flight Software Assessment	27
	F. Assessment of Allied Subsystems Affecting ACDS	32
VII.	CONCLUSIONS	44
REFERENCES		45
APPENDIX A —	RID's SUBMITTED BY HEAO-B ACDS REVIEW TEAM	47
APPENDIX B —	MEMO ED12-76-58, SELTZER TO WOJTALIK, DATED JULY 26, 1976, SUBJECT: "FORMATION OF HEAO-B ACDS REVIEW TEAM"	97

TABLE OF CONTENTS (Continued)

		Page
APPENDIX C —	MEMO EE71-390-76, WOJTALIK TO DR. LOVINGOOD, DATED AUGUST 3, 1976, SUBJECT: "HEAO-B ACDS AD HOC REVIEW TEAM"	111
APPENDIX D —	MEMO ED12-76-62, SELTZER TO WOJTALIK, DATED AUGUST 12, 1976, SUBJECT: "HEAO-B ACDS REVIEW TEAM CHARTER"	115
APPENDIX E —	LISTING OF AVAILABLE HEAO-B DOCUMENTATION	121
APPENDIX F —	MEMO ED12-76-88, SELTZER TO WOJTALIK, DATED OCTOBER 13, 1976, SUBJECT: "HEAO-B ACDS PRE-CDR"	141
APPENDIX G —	HOFFMAN, D. P., "HEAO ATTITUDE CONTROL SUBSYSTEM —A MULTIMODE/MULTIMISSION DESIGN," AIAA PAPER 76-1925, AIAA 1976 GUIDANCE AND CONTROL CONFERENCE, SAN DIEGO, CALIFORNIA, AUGUST 1976	159
APPENDIX H —	HEAO-B ACDS REVIEW TEAM CALENDAR	171
APPENDIX I —	HEAO-B ACDS REVIEW TEAM ACTION ITEM LOG	175
APPENDIX J —	HEAO-B ACDS REVIEW TEAM MINUTES	183
APPENDIX K —	MEMO ED12-76-66, SELTZER TO WOJTALIK, DATED AUGUST 27, 1976, SUBJECT: "INTERIM REPORT OF HEAO-B ACDS REVIEW TEAM"	245
APPENDIX L —	MEMO ED12-76-87, SELTZER TO WOJTALIK, DATED OCTOBER 13, 1976, SUBJECT: "REVIEW OF HEAO-B CEI AND ACDS SPECIFICATIONS"	261

TABLE OF CONTENTS (Concluded)

		Page
APPENDIX M	MEMO ED12-76-83, SELTZER TO WOJTALIK, DATED OCTOBER 5, 1976, SUBJECT: "REVIEW OF HEAO-B ACDS CDR DOCUMENTATION"	271
APPENDIX N	REVIEW TEAM (MILNER) QUESTIONS CONCERNING RID NO. 5	281
APPENDIX O	NOTE TO SELTZER FROM HIGHT, DATED AUGUST 20, 1976, SUBJECT: "ACTION ITEM NO. 14 RESPONSE"	283
APPENDIX P	NOTE TO SELTZER FROM KENNEL, DATED 3 SEPTEMBER 1976, SUBJECT: "RESPONSE TO ACTION ITEM NO. 17"	289
APPENDIX Q	ECR BY SHELTON, DATED SEPTEMBER 30, 1976, SUBJECT: "JITTER DEFINITION"	293
APPENDIX R	MEMO TO SELTZER FROM CARLILE, DATED SEPTEMBER 28, 1976, SUBJECT: "ACTION ITEM: DEFINE WHAT IS MEANT BY PROBABILITY IN SECTION 3.1.1.2.5 ACDS OF 72M10067"	295

LIST OF ACRONYMS

ACDS	Attitude Control and Determination Subsystem
A/D	Analog to Digital
AGSS	Attitude Ground Support System
AS&E	American Science and Engineering (Company)
ATS	Advanced Technology Satellite
BOL	Beginning of Life
CDA	Critical Design Audit
CDHS	Command and Data Handling Subsystem
CDR	Critical Design Review
CEI	Contract End Item
CIA	Control Integration Assembly
COQ	Certificate of Qualification
CP	Celestial Point (Mode)
DHA	Data Handling Assembly
DPA	Digital Processor Assembly
DTM	Dual Thruster Module
EAA	Experiment Accommodation Assembly
E&C	Electronics and Control (Laboratory)
ECI	Earth Centered Inertial (Coordinate System)
ECU	Electronics Control Unit

LIST OF ACRONYMS (Continued)

EOL	End of Life
FME	Failure Mode Electronics
FPH-B	Flight Software — HEAO-B
FPTA	Focal Plane Transport Assembly (also "Lazy Susan")
FSA	First Sun Acquisition (Mode)
GSFC	Goddard Space Flight Center
HEAO-B	High Energy Astronomy Observatory-B
HRT	High Resolution Telescope
I/O	Input/Output
LPL	Long Pulse Logic
LOS	Line of Sight
MOP/DOP	Master Observing Program/Detailed Observing Program
MSFC	George C. Marshall Space Flight Center
NSA	Normal Sun Acquisition (Mode)
OCC	Operations Control Center
OSO	Orbiting Solar Observatory
OST	Observatory System Test
PCD	Primary Command Decoder
PCU	Power Control Unit

LIST OF ACRONYMS (Continued)

PDR	Preliminary Design Review
PE	Propulsion Enable
PROGRAM 8623	A classified satellite program (TRW designator)
PWM	Pulse Width Modulator
Q_{Ei}	Control Error Quaternion ($i = 1, 2, 3$)
Q_i	Vehicle Control Quaternion
RCS	Reaction Control Subsystem
RGA	Reference Gyroscope Assembly
RID	Review Item Discrepancy
rpm	Revolutions per Minute
RSU	Rate Sensor Unit
RW	Reaction Wheel
RWA	Reaction Wheel Assembly
RWEA	Reaction Wheel Electronics Assembly
SAO	Smithsonian Astrophysical Observatory
S&E	Science and Engineering, MSFC
SCP	Stored Command Programmer
SIA	Spacecraft Integration Assembly
SSA	Sun Sensor Assembly

LIST OF ACRONYMS (Concluded)

ST	Star Tracker
TA	Transfer Assembly
TRW	TRW Systems Group
UV	Undervoltage
VDE	Valve Driving Electronics
YSSA	Y Sun Sensor Assembly
ZSSA	Z Sun Sensor Assembly

TECHNICAL MEMORANDUM X-73366

TECHNICAL ASSESSMENT OF HIGH ENERGY ASTRONOMY OBSERVATORY-B (HEAO-B) ATTITUDE CONTROL AND DETERMINATION SUBSYSTEM (ACDS)

SUMMARY

On July 23, 1976, a Team of Marshall Space Flight Center (MSFC) Science and Engineering (S& E) personnel under the leadership of Dr. S. M. Seltzer was formed to assess the technical adequacy of the High Energy Astronomy Observatory-B (HEAO-B) Attitude Control and Determination Subsystem (ACDS). The Team's activities culminated in their participation in the HEAO-B ACDS Critical Design Review (CDR) on October 19-20, 1976. As a result of their in-depth analysis of the ACDS, the Team has found no reason why the ACDS will not perform its specified functions adequately. However, 23 concerns pointing to potential difficulties were found and delineated; 18 of these were issued as Review Item Discrepancies (RID's) and are presented in Appendix A. In every case one or more possible solutions are proposed. TRW's responses to these RID's are still under preparation. It is assumed that the RID response will be received and handled by the S& E Laboratory responsible for each particular item (the initiator of each RID is identified thereon). The concerns and corresponding RID Nos. are as follows:

Concern No. 1 (RID's Nos. 1 and 1A) — There is no plan to correct and update HEAO-B ACDS CDR documentation.

Concern No. 2 (RID No. 2) — An MSFC-directed change to the HEAO-B Contract End Item (CEI) Specification [1] has not been implemented by TRW; i.e., The prime mode for initiating normal Sun acquisition (NSA) over Ascension Island is automatic (computer initiated) with manual backup (ground command).

Concern No. 3 (RID No. 3) — There is a need to update the ACDS Sub-System Specification [2] because ACDS performance will be assessed against this document.

Concern No. 4 (RID No. 4) — Methods for eliminating the effects of relatively short-term voltage drops due to high current demands [reaction wheel (RW) desaturation, etc.] should be investigated.

Concern No. 5 (RID No. 5) — If the long pulse logic (LPL) circuit "triggers," the spacecraft power bus is off-loaded immediately, placing the observatory in a drift mode. The drift mode is then terminated by either ground command or an undervoltage (UV) sensor signal. The UV sensor signal is not a reliable means to trigger first Sun acquisition (FSA) mode because of the uncertainty of the remaining battery life.

Concern No. 6 (RID No. 6) — The present (TRW) plan for LPL operations may use excessive Reaction Control Subsystem (RCS) propellant.

Concern No. 7 (RID No. 7) — The present (TRW) total system momentum test level is too low to permit momentum management by judicious target sequence selection.

Concern No. 8 (RID No. 8) — The TRW isolator model needs to be verified or changed because indications are that the isolator possesses nonlinear characteristics. If true, the dynamic response (performance) will be affected — perhaps adversely.

Concern No. 9 (RID No. 10) — The ACDS CDR documentation should be corrected to reflect the command pulse width that was used in the RCS qualification tests.

Concern No. 10 (RID No. 11) — TRW has not shown that the algorithm that was developed for a more general ground initial acquisition program will work satisfactorily for HEAO-B with its reduced star tracker field of view, scan rate, and worse-than-expected gyro drift rate.

Concern No. 11 (RID No. 12) — TRW and MSFC do not agree on the state of battery discharge at UV trigger point. An agreement must be reached and ACDS CDR documentation corrected accordingly.

Concern No. 12 (RID No. 13) — The value of allowed magnetic moment used in the CEI Specification is incorrect. The correct value must be determined by TRW and the CEI Specification amended accordingly.

Concern No. 13 (RID No. 14) — There is an incompatibility between the HEAO-B ACDS CDR Data Package and the HEAO-A Mission Control Procedures (HEAO-B procedures do not now exist) in the area of specific commands for launch configuration and for the procedure for transfer to NSA.

Concern No. 14 (RID No. 15) — Details concerning the subsystem tests, including criteria for assessing test results, do not exist and must be developed. Otherwise, the major portion of the Review Team assessment is invalid.

Concern No. 15 (no RID) — There is no plan for a formal review of the ACDS test results; therefore, MSFC has no basis for assuring that the items tested will meet their specifications.

Concern No. 16 (RID No. 16) — At the time the RID was written, there was a discrepancy in the numerical value of the focal plane transport assembly (FPTA or "lazy susan") maximum angular momentum. During the CDR, this concern was eliminated after the Review Team read a letter by American Science and Engineering (AS&E) to TRW agreeing with the maximum angular momentum value of approximately 1 ft-lb-sec stored in the FPTA. However, this momentum level will trigger RCS firings with the existing dead bands.

Concern No. 17 (RID No. 17) — In view of the higher-than-expected HEAO-B magnetic moments, the adequacy of the tilted dipole Earth magnetic field model must be assessed. If it is inadequate, a higher fidelity model must be used.

Concern No. 18 (RID No. 19) — TRW should correct the numerous discrepancies that exist in the documents pertaining to flight program requirements and design, and to the Transfer Assembly (TA) Specification.

Concern No. 19 (RID No. 20) — There is no assurance that TRW will provide, in a timely manner, the MSFC design laboratories with the hardware component data packages that go with the certificate of qualification (COQ).

NOTE: RID's Nos. 9 and 18 have been omitted intentionally.

Concern No. 20 (no RID) — TRW has not completed the response to an old action item on HEAO-A which is applicable directly to HEAO-B, namely, how to support ACDS anomaly resolutions and flight software changes after November 15, 1976.

Concern No. 21 (no RID) — In some cases, errors in HEAO-B Preliminary Design Review (PDR) documentation were pointed out. These errors were not corrected in the HEAO-B CDR documentation. For example, on p. 2-3, Fig. 2-2 of the PDR documentation and on p. 2-3, Fig. 2-2 of the CDR documentation the same error still exists; i.e., the "HEAO-A/C RGA" should be be "HEAO-B RGA." Also, on p. 2-15, Fig. 2-4 of the PDR documentation and on p. 2-15, Fig. 2-4 of the CDR documentation the same error still exists; i.e., the RGA assembly arrangement is shown incorrectly.

Concern No. 22 (no RID) — The HEAO-B ACDS Review Team did not follow in detail the disposition of the concerns raised by the HEAO-A ACDS Review Team. However, it appears that the latter are not being pursued actively. Hence, the Review Team is concerned that the HEAO-B ACDS concerns will not receive appropriate attention.

Concern No. 23 (no RID) — TRW raised a concern over the fidelity of the slosh and RW models that they have been using (Appendix E of Reference 3, Memo HEAO-76-460-178, 9 August 1976, p. 31). TRW recommends additional analysis and testing to verify these two models. The Review Team shares TRW's concern.

I. INTRODUCTION

On July 23, 1976, a Team was formed to review the HEAO-B ACDS (Appendix B). This was confirmed in a memorandum dated August 3, 1976 from Mr. Wojtalik to Dr. Lovingood (Appendix C). The Team was chaired by Dr. S. M. Seltzer and consisted of members of the Data Systems Laboratory (Bob Rowe and Charles Collins), the Electronics and Control Laboratory (Dr. George Doane, Robert Milner, and C. R. Sims), the Systems Analysis and Integration Laboratory (Paul Craighead, Hermon Hight, and Dr. Maurice Singley), the Systems Dyanmics Laboratory (Claude Green, Hans Kennel, Dr. S. M. Seltzer, and Harvey Shelton), and the Structures and Propulsion Laboratory (Lee Jones); it was entitled the "HEAO-B ACDS Review Team." The Team was augmented by Mr. Bob Wolf's (EE71) and Mr. C. D. Carlile's (HA23) participation.

The mission of the Team was to discharge S&E's ACDS CDR responsibility by assessing the ACDS's technical adequacy and identifying any potential or existing inadequacies. It was planned to accomplish this mission in time for the Team to participate actively in the HEAO-B ACDS CDR. This mission was implemented by performing a review of the ACDS design. This consisted of assessing the ACDS performance predicted by TRW; determining if that performance meets the TRW-developed ACDS Subsystem Specification (and if not, delineating where it fails to do so); determining if the ACDS specification meets the MSFC-developed CEI specification (pointing out any discrepancies); and attempting to understand experiment requirements that led to the establishment of ACDS requirements within the CEI specification. The team mission and allied definitions (including a specific assumption by the Team of the definition of the ACDS) are included in the Team-generated HEAO-B ACDS Review Team Charter (Appendix D). Mr. Hoffman (TRW) provided a comprehensive list of available HEAO-B ACDS documentation (Appendix E).

It was the Team's intention to participate fully in the CDR. This was accomplished by reviewing the HEAO-B ACDS CDR documentation [3] and preparing RID's on all discrepancies and concerns uncovered (Appendix A). Then a pre-CDR was held on October 6-7 between representatives of TRW (Dale Hoffman, Dr. Dick Rose, and Dr. Ernie Todosiev); the Review Team; Dr. Steve Murray [Smithsonian Astrophysical Observatory (SAO)]; and Fred Wojtalik, Bob Wolf, C. D. Carlile, and interested members of S&E to help TRW prepare for the pre-CDR; a list of the Team's questions was forwarded to them (Appendix F). During the course of the pre-CDR, TRW personnel answered most of the questions. An unofficial list of their answers (also in Appendix F) was prepared the night of October 6 and presented to the Team. Finally, the CDR took place on October 19-20 at TRW. The planned full Review Team participation did not take place.

II. DEFINITION OF ACDS

To accomplish their mission, it was necessary for the Review Team to assume a definition of the HEAO-B ACDS. After hearing Dale Hoffman's presentation describing the ACDS (Appendix G), the Team chose to define the ACDS to be the spacecraft-borne system that includes:

a. The hardware components, i.e., the star trackers (ST's), reference gyroscope assemblies (RGA's), reaction wheel assemblies (RWA's) and electronic assemblies (RWEA's), Sun sensor assemblies (SSA's), TA and digital processor assembly (DPA).

b. Stabilization and control laws and the software and hardware required to implement them.

c. On-board implementation of pointing, maneuvering, and momentum unloading schemes and required associated software and hardware.

d. Flight software was investigated to the flowchart level only. The adequacy of TRW's detailed implementation (i.e., program coding) is assumed to be established through the formal flight software qualification tests, the informal ACDS tests, and the formal observatory system test (OST). Neither the Review Team nor anyone else at MSFC reviewed the detailed coding.

The following assumptions were made:

a. The ACDS does not include ground software. However, the Review Team did investigate those aspects of the ground software that might affect, or otherwise influence, the ACDS design and performance.

b. Ground-generated information (such as two sets of quaternions, the RG τ-matrix, the RW matrix, and target and maneuver information) used by the ACDS is correctly determined and communicated to the ACDS.

c. All telemetry associated with the ACDS is not included and is assumed to meet the requirements set forth by those needing ACDS data.

d. Flight software was to be investigated only to the flowchart level. In actuality flight software was investigated for technical adequacy as per the flowcharts in D01137 [4] and D01138 [5].

e. Flight hardware was to be investigated to at least the block diagram level. Because block diagrams can be to varying degrees of detail, the concerned Team member was to determine the level of detail on a case-by-case basis.

III. TEAM APPROACH

The Team accomplished their mission by executing the following sequence of events:

a. Formation of Team and development of mission/charter

b. TRW presentation of HEAO-B ACDS technical description

c. Identification of pertinent up-to-date documentation

d. Investigation of HEAO-B ACDS requirements

e. Evaluation and presentation (to Team) of each technical portion of ACDS by appropriate technical specialists:

1. Pointing, maneuvering, and momentum management and associated software

2. Control laws, stability, flight modes, and associated software

3. Hardware

4. RCS

5. Electrical subsystem

6. Flight software

7. Ground generated information used by the ACDS.

f. Presentation on HEAO-B experiment requirements by J. Power (HA24)

g. Report on criticisms leveled against HEAO-B ACDS from targeting viewpoint by T. Recio (EE71) and F. Kurtz (EL11)

h. Report on critical single point failure that potentially could affect ACDS by N. Milly (EL54)

i. Detailed review and formal comments on:

1. CDT specifications

2. ACDS subsystem specifications

3. Hardware specifications

4. Software specifications

j. Status on HEAO-A ACDS team report by F. Wojtalik (EE71)

k. Detailed review and formal comments on ACDS CDR documentation

l. Pre-CDR at MSFC by TRW

m. Preparation of RID's

n. Participation in CDR at TRW

o. Preparation of final report

p. Disbanding of Review Team.

Three means were used to record the foregoing events:

a. A calendar of events (Appendix H)

b. An action item log (Appendix I)

c. Written minutes of each Review Team meeting (Appendix J) and an interim report (Appendix K).

IV. TEAM ACCOMPLISHMENTS

The Review Team has accomplished its assigned mission. This includes the following achievements:

a. A complete technical review of the HEAO-B ACDS as defined by the Review Team.

b. A detailed review of the HEAO-B CEI specification [1] and the ACDS subsystem specification [2] culminating in two lists of comments and recommended corrections (Appendix L). A major portion of this effort was expended in making the two specifications mutually compatible. In their ensuing work and associated documentation, the Review Team has assumed that their recommendations will be implemented. If the recommendations are not implemented, some or all of the Review Team's conclusions will be invalidated.

c. A detailed review of the ACDS hardware and software specifications. This resulted in the opinion that the hardware and software, as presently known, will meet their respective specifications.

d. A detailed review of the ACDS CDR documentation. This review resulted in a number of concerns, most of which have resulted in the submission of formal RID's (Appendix A).

e. The identification of pertinent current HEAO-B ACDS technical documentation (Appendix E).

In addition to the foregoing, a number of action items were generated internally, and responses obtained by the Review Team (Appendix I).

V. TEAM FINDINGS

The major finding is that the Review Team's investigation revealed no reason why the ACDS will not meet its specified performance. This is based on the satisfactory elimination of the 23 concerns expressed in the Summary. All other technical questions and concerns that arose were answered satisfactorily and are outlined in the Action Item Log (Appendix I).

Assumptions made by the Review Team are as follows for convenience:

a. The ACDS studied by the team is that defined in the section entitled "Definition of ACDS" and in the charter (Appendix D).

b. It is assumed that the alterations to the CEI specification and the ACDS subsystem specification recommended (Appendix L) by the Team will be implemented. It would be incorrect to assess the ACDS with respect to the present partially-invalid specifications.

c. It was assumed that the hardware and software acceptance tests will confirm that the hardware and software meet, or are better than, the individual hardware and software specifications. If this proves to be untrue, the effect must be assessed on a case-by-case basis.

d. It is assumed that the hardware qualification tests will confirm that the components can survive the environmental requirements of HEAO and that appropriate COQ packages, together with approved documentation (waivers, deviations, etc.), will be generated and a COQ statement signed by TRW. It further is assumed that these packages will be transmitted in a timely fashion to the Reliability and Quality Assurance Office of MSFC for coordination with the appropriate design laboratories for certification that TRW has completed necessary action to comply with MSFC HEAO qualification verification requirements. The adequacy will be judged by the data presented because there has been little or no witnessing of component tests by S&E personnel.

e. It is assumed that the 23 concerns listed in the Summary will be eliminated satisfactorily.

The RID's, summarized in the Summary section, are described in more detail in this section. The actual RID's are found in Appendix A. Unless noted to the contrary, each RID was accepted at the CDR.

The RID's are described as follows:

RID No. 1: Updated HEAO-B ACDS CDR Documentation (Seltzer) — This RID requires that the CDR documentation be maintained as a correct, up-to-date cohesive document until the HEAO-B actually is launched.

RID No. 1A: Clarifying Notes After Memo Titles in Documentation Lists (Kennel) — This RID is to be grouped together with RID No. 1. It is to provide a means whereby portions of memoranda included in the HEAO-B CDR appendices that become outdated will be identified.

RID No. 2: Automatic Initiation of Normal Sun Acquisition (Hight) — In the discussion of this item at the CDR, TRW's answer was not satisfactory. The flight software may still require a change if the Stored Command Programmer (SCP) is used under baseline conditions instead of as directed by MOD 121 [6] or if not used at all. A decision to alter the flight program must await an SCP decision.

RID No. 3: Update ACDS Subsystem Spec (Seltzer) — The need for updating the specification against which the ACDS performance is measured is obvious.

RID No. 4: Elimination of Effect of Temporary Voltage Drop on Under Voltage Trigger (Kennel) — The UV trigger level presently has to be set low enough to avoid false triggering on voltage drops due to high electric current demands. This RID is related to RID No. 5. Methods for eliminating false triggering due to these short-term voltage drops should be investigated.

RID No. 5: Under Voltage Sensor Setting and Long Pulse Logic (Milner) — The concern is that if the LPL circuit triggers, then the spacecraft power bus is off-loaded immediately and the observatory is placed in a drift mode. This drift mode would be terminated by either ground correction or the UV sensor energizing the RCS thrusters and subsequent reacquisition of the Sun. TRW's response to the RID (in writing) was given on the same day. The response was brief and did not indicate actions (if any) that TRW would initiate in response to the problems stated. A list of six additional questions concerning this same RID was prepared and submitted to TRW on October 20, 1976 (Appendix N). A splinter meeting was held with the TRW design personnel on the same day. Five of the six questions were answered in the meeting. It was requested that TRW follow up with written response to all of the questions.

TRW is opposed to switching immediately to the FSA mode in case of an LPL failure because they claim the FSA mode results in a waste of RCS propellant. Even if the UV sensor is set to trigger at 26.5 V, the battery capacity is marginal. TRW estimated that approximately 21 amp-hr capacity remain in the batteries at this level. This would give approximately 6 hr of remaining life in the batteries.

The Review Team concludes that the UV sensor is a poor indicator to rely upon for survival of the spacecraft. Use of the UV sensor aboard the spacecraft tends to give a false sense of security for protection of the spacecraft.

The Review Team further concludes that the burden of spacecraft survival now must be placed entirely upon the Mission Operations Control Center (OCC) personnel. Around-the-clock vigilance will be required to detect and to correct immediately all anomalies that could eventually result in loss of the spacecraft.

RID No. 6: Propellant Savings Resulting from Planned LPL Operation (Green) — This RID states that TRW should provide data to show results of an analytical comparison of RCS propellant consumption for the planned LPL operations versus immediately switching to the FSA mode.

RID No. 7: Reassessment of Total System Momentum Test Level (Kennel) — An investigation should be made to determine if any deleterious effects result from raising the total system momentum test level. Without this raise, momentum management by judicious target sequence selection is impaired greatly.

RID No. 8: Telescope to Spacecraft Isolator Nonlinearity Effect on ACDS (Shelton) — The TRW isolator model should be either validated or changed. If the latter is chosen, a nonlinear analysis should be conducted with the new model.

RID No. 9: Omitted (redesignated RID No. 1A).

RID No. 10: RCS Command Pulse Width (Jones) — The ACDS CDR documentation should be changed to reflect the command pulse width used in the RCS qualification tests. At the CDR it was concluded that the 40 msec command pulse width is equivalent to a 32.6 msec square wave pulse (30 msec was used in the simulations). The ACDS documentation should still be changed to reflect this. The 20 msec reference is p. 6-20, Table 6-4 (pitch roll thrusters) of Reference 3; this value is given as the requirement for those thrusters.

RID No. 11: HEAO-B Ground Initial Acquisition Program (TRW Complying with Paragraph 3.2.1.2.5.8.3 of HEAO-B CEI) (Singley) — TRW must develop and provide supporting evidence that the TRW algorithm developed by Dr. Farrenkoff will work for HEAO-B with its reduced ST field of view, scan rate, and worse-than-expected gyro drift rate.

RID No. 12: Battery Depth of Discharge Versus Under Voltage Trigger (Hight) — TRW and MSFC need to reach an agreement on state-of-battery discharge at UV trigger point. ACDS CDR documentation subsequently will need to be updated as required.

RID No. 13: Change of Magnetic Moment Specification (Kennel) — The correct value of the allowed magnetic moment must be determined and placed in the CEI specification. Mr. Wojtalik withdrew this RID and took an HEAO action item to ensure that MSFC determines a corrected value for the allowed magnetic moment.

RID No. 14: Incompatibility Between ACDS CDR Data Package and TRW Document MP-04S (Mission Control Procedures) (Rowe) — Incompatibility exists for specific commands for launch configuration and for the procedure for transfer to NSA. TRW responds that MP-04S is an HEAO-A document. TRW should explain this discrepancy.

RID No. 15: HEAO-B ACDS Subsystem Test Plan (Shelton) — The details of the subsystem tests must be provided in sufficient detail to show input data and test conditions. Criteria for assessing results must be developed and provided with a schedule for accomplishment.

RID No. 16: Determine FPTA Maximum Angular Momentum (Kennel) — This RID was prepared because of the Review Team's and the TRW HEAO ACDS engineers' ignorance of a communication from AS&E to TRW stating that AS&E agrees with MSFC and TRW on the value for FPTA maximum angular momentum (Approximately 1 ft-lb-sec). The RID was withdrawn by the Review Team.

RID No. 17: Magnetic Field Modeling (Kennel) — It must be shown that the tilted dipole Earth magnetic field model is still adequate in light of higher-than-expected HEAO-B magnetic moments. If it is inadequate, a higher fidelity model must be used. This RID was withdrawn with RID No. 13 by Mr. Wojtalik, and he will cover both RID items in the same action.

RID No. 18: Flight Software Discrepancies (Kennel) — This RID was withdrawn by the Review Team because the substance of this RID is covered in RID No. 19.

RID No. 19: Flight Software Discrepancies (Hight/Rowe/Kennel) — A number of discrepancies exist in documents D01137, D01138, and EQ4-1100A [7] pertaining to flight program requirements and design and the TA specification. TRW should correct these discrepancies.

RID No. 20: Ensuring that Components meet the Specifications (Seltzer) — The MSFC design laboratories must receive the hardware component data packages that go with the COQ's in sufficient time that MSFC can review them prior to the dates the COQ's must be signed.

VI. ASSESSMENT OF ACDS AND ALLIED SUBSYSTEMS

The Review Team assessed each portion of the ACDS and those allied subsystems that affect it. The assessment is divided into the following areas: hardware; structural dynamics; pointing, maneuvering, and momentum management; control laws and stability; flight software; and allied subsystems. In general, the description of each begins with a description of the purpose and operation of that particular item or assembly. This is followed by a description of its similarities and differences with similar HEAO-A items. The actual assessment is then presented in a statement of the ability of the item to perform properly and a description of pertinent concerns. In several cases it was appropriate to deviate from this outline structure.

A. Hardware Assessment

1. Digital Processor Assembly (DPA).

a. Purpose and Operation. The functions of the DPA are the same as those of the flight program which gets executed in the DPA (see section on Flight Software, Para. E, p.27).

The DPA is a stored program general purpose computer (CDC 469 R^2 computer with 8192 16-bit words of plated wire memory) capable of being controlled and reloaded in flight. It is a 16-bit parallel processor performing fixed point, fractional, and two's complement arithmetic. It has a repertoire of 42 instructions, including some double precision [8] instructions.

Two identical DPA's are used per spacecraft. One is in a powered-on operating mode and the other DPA is in a powered-off standby mode.

The DPA interfaces only with the TA. Power application to and removal from the DPA is controlled by command processing logic within the TA.

Data inputs to the DPA are 16 bit parallel data inputs under DPA program control. The DPA selects the input by use of the four channel select bits.

Three external interrupts, in addition to the direct execute interrupt, are available at the DPA input/output (I/O). One interrupt is used to start the DPA computational cycle in synchronism with the start of the telemetry minor frame (every 320 msec).

Data outputs from the DPA are 16 bit parallel data outputs issued under DPA program control. The DPA has a 16 bit output register which presents data to the output buffering electronics in the TA.

TA-DPA controls allow a partial or complete load of the DPA memory by use of either the "direct execute" or "stop direct execute" control signals. There is, in effect, a direct memory access capability. Protected areas of memory may be loaded by ground command via an override signal.

The DPA and its stored program are not required during the FSA mode.

b. Similarities and Differences with HEAO-A. The HEAO-B DPA is the same as the HEAO-A DPA.

c. Ability to Perform Properly. There is no reason to believe the DPA will not perform its functions properly.

d. Concerns. There are no concerns.

2. Reference Gyro Assembly (RGA).

a. Purpose and Operation. Each RGA consists of a rate sensor unit (RSU) containing two single-degree-of-freedom gas bearing gyros with loop electronics and an electronic control unit (ECU) containing support electronics. The input axes of the two gyros within each RGA are rotated 58 degrees, 17 arc min so that when arranged in the orthogonal configuration of HEAO-B, the axes of the three RGA's form a dodecahedron. Only three gyros are operated at any time with the remaining units powered-off and providing standby redundancy via ground command.

The basic rate gyro instrument is the Bendix 64 PM floated gyro with magnetic suspension; gyros of the same generic series have flown on inertial platforms for many years. There have been changes since the original design; however, nearly identical units were used in Advanced Technology Satellite (ATS) and Orbiting Solar Observatory (OSO) space applications in similar flight configurations. The major change in the complete HEAO assembly from previous design is the electronics configuration which Bendix changed from a separate box, discrete component version to a gyro-mounted hybrid version. The key features of the unit, very low drift rate characteristics and low noise, allow use of the RGA outputs to propagate an accurate estimate of the attitude reference on-board the observatory.

The functions implemented within each of the gyro channels are as follows: each gyro channel (subassembly) processes the power through a dedicated supply which distributes conditioned secondary power to the other elements of the subassembly. Pulse width modulated binary capture loops are used to maintain the gyro pickoffs at null. The output of this pulse torque loop is a quantized series of binary pulses. In this design each pulse represents an angular increment of 0.1 arc sec. These pulses are accumulated to provide integrated incremental attitude changes over a readout period.

The power moding and data readout control functions are provided by signals generated external to the RGA.

b. Similarities and Differences with HEAO-A. The RGA's are identical for all HEAO missions. The HEAO-A/C design baseline requires two RGA's. This arrangement provides one level of redundancy within the gyro sensing function. The HEAO-B design adds a third RGA to provide two additional levels of redundancy compatible with the increased mission life requirement.

c. Ability to Perform Properly. Qualification and acceptance testing of the RGA's have indicated they will perform their proper function.

d. Concerns. Many of the concerns expressed in the HEAO-A ACDS report have been resolved by Bendix. These include successful completion of the hybrid electronics fabrication, resolution of all qualifications and acceptance test problems including the pyrotechnic shock requirement, and on-time delivery of the HEAO-A flight units.

Problems in meeting certain specifications, notably the voltage sensitivity drift specification, have been solved by special testing and certain relaxations of the specifications. Several minor problems have occurred during HEAO-A spacecraft testing, and these have to be resolved.

The one concern that still remains is the successful completion of a gyro performance vacuum test. Decisions on where and when to test have been delayed; planning is now proceeding to conduct the test in the Electronics and Control (E&C) Laboratory in December 1976 and January 1977.

3. Reaction Wheel Assembly (RWA).

a. Purpose and Operation. The RWA provides a source of bidirectional angular momentum and torque for the HEAO spacecraft. The angular momentum is achieved by rotating an inertia wheel which is suspended on ball bearings. The inertia wheel rotation and RWA torque are generated by exciting a two-phase, six-pole, ac induction motor. The motor excitation voltage, which is provided from the spacecraft, is a two-phase square wave occurring at a nominal fundamental frequency of 125 Hz. The rotor assembly and motor are enclosed in an evacuated and hermetically sealed housing which locates the angular momentum vector orthogonal to the spacecraft interface plane. The motor torque is delivered into this interface plane. The rotational speed and direction information is provided to the spacecraft by a self-excited electromagnetic transducer in conjunction with a shaped notch in the rotor rim.

b. Similarities and Differences with HEAO-A. The HEAO-A does not have a RWA.

c. Ability to Perform Properly. The ability of the RW's to perform properly has been demonstrated by successful completion of the following tests:

1. Engineering model tests

2. Qualification model tests

3. Certain life testing simulating starts, stops, and reversals

4. Final acceptance tests of the first flight unit.

d. Concerns. The life test was not conducted in a vacuum chamber and therefore, the true evaporation rate of the mineral base bearing lubricant was not determined. There is no concern for the 1 year mission as planned but, should it be extended appreciably (2 years), the lubricant may become marginal.

There is a minor concern that the flight unit RW's built by Sperry are not being operated with the flight unit RWEA's built by TRW until they are installed on the spacecraft. In answering this concern, TRW states that the qualification and engineering units will be operated together and feels that not operating the flight units together is a minimal risk.

4. Reaction Wheel Electronics Assembly (RWEA).

a. Purpose and Operation. The primary purpose of the RWEA is to provide the required power amplification to drive the RWA motor in response to commands issued by the TA. The command input is received as a 10 bit plus sign, serial, digital word, and the RWEA motor drive outputs are 2 phase, 125 Hz square waves derived from the unregulated power bus. To protect the RWEA and RWA against damage, a current limiter is provided to prevent the equivalent motor current from exceeding 10 amps peak. A thermal shut-off of the power amplifiers is implemented, in the event of exceeding specified RWEA and RWA temperature limits. In addition, processed telemetry outputs of wheel voltage, current, temperature, and period are provided together with RWEA converter output voltage and temperature.

b. Similarities and Differences with HEAO-A. The HEAO-A does not have an RWEA.

c. Ability to Perform Properly. The RWEA's ability to perform properly has been demonstrated only on a breadboard model. This was accomplished with dummy loads and with the engineering model RW. The design has been reviewed in depth and appears sound. The electronics are conventional and should present no problems in packaging and fabrication. The final proof of its ability to perform will be demonstrated by engineering model testing in early 1977.

d. Concerns. There is no design or breadboard operational concern with the RWEA. It would seem that the fabrication of the unit, being as late as it is, could produce an impact on spacecraft checkout if any significant problems

in packaging, fabrication, or unit checkout should occur. It also should be mentioned that this is the only item to our knowledge that has no equipment specification released to date. A draft copy was submitted at the Delta Critical Design Audit (CDA), signed only by the design engineer.

5. Sun Sensor Assemblies (SSA's).

a. Purpose and Operation. The HEAO Sun sensor complement consists of two identical units which are referred to as the Y Sun sensor assemblies (YSSA), and a third unit that is referred to as the Z Sun sensor assembly (ZSSA). One YSSA is mounted with its boresight parallel to the spacecraft +y axis, and the other YSSA is mounted so that its boresight is parallel to the -y axis. The ZSSA is mounted with its optical axis parallel to the spacecraft +z axis.

Each YSSA consists of two redundant solar detectors which are oriented approximately ±45 degrees with respect to the y axis in the xy plane. Additionally, each detector is canted 20 degrees toward the -z axis to provide a nonzero output for the Sun oriented along (or near) the -z axis. The output signals from these four detectors are combined in the TA failure mode electronics (FME) to provide pitch and roll steering signals and a Sun presence signal. The two YSSA's provide coverage of the -z hemisphere and that portion of the +z hemisphere that is not suitably within the field of the ZSSA.

The ZSSA contains two distinct types of detectors (a redundant wide angle detector and two narrow angle detectors):

1. The wide angle detector consists of two pairs of redundant solar detectors identical to YSSA. One pair is oriented with respect to the spacecraft yz plane in such a way as to provide a pitch error signal over most of the +z hemisphere. The other pair is oriented with respect to the xz plane to provide a corresponding roll error signal.

2. The narrow angle detector consists of a system of apertures ahead of four solar cells oriented in a quadrant array so as to define the field. The four independent quadrant output signals are conditioned in the TA and digitized by the analog to digital (A/D) converter for routing to the DPA.

The individual quadrant outputs are combined to derive pitch and roll Sun attitude.

Properly calibrated, these error signals are very accurate within approximately ±1 degree of null and are moderately accurate and monotonic over the remainder of the field.

b. Similarities and Differences with HEAO-A. The SSA's on HEAO-A, -B, and -C are identical and are mounted on the spacecraft in the same way.

c. Ability to Perform Properly. No major problems have been reported in qualification, acceptance, or HEAO-A spacecraft testing of the SSA. A problem, reported as minor by TRW and of which we have only limited information, exists concerning the separation of the electrical connection tabs where they attach to the silicon cell. The problem was reported orally as solved.

d. Concerns. Documentation on the tab separation problem has been requested. There are no other concerns on the SSA's.

6. Transfer Assembly (TA).

a. Purpose and Operation. The TA is an electronic unit which performs interface and support functions for the other ACDS components. It accepts commands from the command data handling subsystem (CDHS) and decodes and distributes them as necessary within the ACDS. The TA routes subsystem measurements and processed data to telemetry, conditions sensor signals, distributes clock pulses to the DPA, implements the failure mode control electronics, provides RW actuation commands, and provides thruster actuation signals to the RCS.

The TA provides signal buffering for the RGA's, SSA's, RWA's, high resolution telescope (HRT) star trackers, and incoming commands and communicates with the DPA and its software program. It also communicates outward to telemetry and provides power level drive signals to actuate the RW's, RCS thruster valves, propellant isolation valves, and thruster heaters. Search continue commands are issued to the HRT star trackers. The TA also implements the hardwired control laws of the FSA mode, which may be activated automatically by on-board logic upon separation from the launch vehicle or upon detection of a catastrophic failure [7].

b. Similarities and Differences with HEAO-A. The HEAO-B TA is the same as the HEAO-A TA.

c. Ability to Perform Properly. There is no reason to believe the TA will not perform properly.

d. Concerns. There are no concerns.

B. Structural Dynamics Assessment

The HEAO-B spacecraft is configured with elastomeric vibration isolators between the experiment-mounted ST's and the reference gyro units. The ST's are rigidly mounted on the optical bench of the experiment. The experiment is mounted in the spacecraft structure on vibration isolators. Their purpose is to prevent thermal deformation of the structure in orbit from deforming and degrading the experiment.

The ACDS concern caused by the isolators is that the dynamic characteristics of the actual isolator hardware being procured are different from those used in all analyses. The isolator used in the models had a single value of stiffness at all dynamic conditions and frequencies. The isolator actually being designed for HEAO-B will contain an elastomer whose stiffness varies with frequency and strain rate. Above 5 Hz, dynamic stiffness variation with frequency probably will not be significant. Between 0.1 and 5 Hz, stiffness will vary with frequency nonlinearly. The isolator stiffness also will vary with strain rate in a predictable but nonlinear way. One percent damping was assumed in the models; the new isolator may have 12 percent damping. In addition, the elastomer in the isolator, when load is removed, will not return immediately to its original shape (i.e., it will exhibit creep). None of these characteristics is predictable completely and can only be determined from vibration or impedance tests of the actual hardware. However, it is certain that the characteristics of the actual isolator will not match the characteristics used in the analytical models.

The effects of the new isolator characteristics on the overall ACDS performance should be assessed (RID No. 8, Appendix A). The probability of a significant effect on control stability is small but should be evaluated. The on-orbit response of the spacecraft to RW unbalance may be affected. The effects of low frequency nonlinearly of the isolator should be assessed against the variable speed of the RW's. Pointing and star acquisition analyses should be reevaluated using the proper stiffness and creep characteristics.

C. Pointing, Maneuvering, and Momentum Management Assessment

1. Attitude References. There are two attitude references: the desired attitude reference and the actual attitude reference. Both references are expressed with respect to the Earth-centered inertial (ECI) coordinate system, and they are in the form of two sets of four quaternions each which reside in the DPA as software. The x-axis of the desired attitude reference is aligned with the current target direction, and the reference is rotated about the x-axis so that the Sun line is in the x-z plane. The desired attitude reference is represented by the target quaternion set Q_{Ti}. The quaternion sets for 14 different targets can be stored in the DPA as part of the target words. The actual vehicle attitude is represented in the DPA by the four quaternions, Q_i, which are propagated with attitude angle increments derived from the strapdown rate gyros. This propagation is in closed form and is exact as long as the angular rate of the vehicle does not change. When the rate is not constant, the propagation process is equal to averaging the rate over the propagation interval of 0.32 sec. Rate gyro errors (misalignment, scale factor errors, drift, noise) cause the Q_i to deviate from their proper value, necessitating an update at regular intervals (see Attitude Reference Update in Para. C.6).

2. Attitude Error Generation. The vehicle attitude control quaternions Q_i and the current target quaternions Q_{Ti} are used to generate a set of four control error quaternions Q_{Ei} by quaternion multiplication. The x-, y-, z-attitude errors are then defined as the negative of twice the quaternions Q_{E1}, Q_{E2}, Q_{E3}.

3. RW Momentum Management. As a baseline, three of the four RW's are used to provide the control system with torquing capability and, in the process, the RW's store the accumulated angular momentum. The momentum storage capability is limited (30 ft-lb-sec per wheel at 2000 rpm) and unloading is initiated whenever one wheel reaches 2000 rpm (MODE=5). All active wheels are decelerated with full reverse current (9.2 amp per wheel) until, individually, the speed drops below 100 rpm. When all active wheels are below 100 rpm, attitude control reverts to the RW's. While the RW's decelerate during unloading, a reaction torque on the vehicle develops, and the RCS counteracts this torque whenever the RCS deadband is exceeded (0.2 degree in x and y and 0.1 degree in z).

4. RW Momentum Envelope. Each RW momentum vector (along the wheel spin axis) has an angle of 70 degrees with respect to the vehicle x-axis and is equidistant to the other two vehicle axes, one momentum vector for each of the y-z quadrants. The total momentum envelope for four RW's allows the inscription of a cone-capped cylinder with a diameter of 3.76 H (H = 30 ft-lb-sec) and a height of 0.80 H; the cones add 0.97 H each for an overall height of 2.74 H. This cone-capped cylinder describes the usable volume for four RW's. When only three RW's are used (this is the baseline), the usable volume is reduced by a factor of 8 (half linear dimension) because the total momentum envelope for three RW's is very unsymmetrical (a lot less symmetrical than that for four RW's). While the three-RW momentum envelope satisfies the design requirements, a lot of capability is wasted by restricting the software not to use four-RW operation. While some momentum management by judicious target sequence selection can be done for three-RW operation, it would be much more efficient for four RW operation.

5. Maneuvers. Maneuvering (MODE=6) is initiated by the change to a new target with its associated set of target quaternions. A large attitude error appears, and the control system then nulls these errors. Ideally the vehicle would rotate about the initial eigenaxis, but other factors (e.g., disturbance torques, inertia crosscoupling, RW torque nonlinearities, etc.) allow the eigenaxis to change direction. No attempt is made to regain the original direction. Simulation (by TRW) showed that, despite the eigenaxis change, the vehicle x-axis does not get too close (less than 30 degrees) to the Sun line if the RW's are unloaded before the maneuver. (The effect of not unloading prior to a maneuver with respect to eigenaxis direction change is being evaluated.) By command, the maneuvers can be made either with the RW's only or with RCS only. The maneuver time is not controlled, and the maneuver is terminated (MODE=4 from MODE=6) when the end-of-maneuver tests are met; these consist of a check of the remaining eigenaxis angle and rate components. The test values for RW maneuvers are different from those for RCS maneuvers. For a RW maneuver the RCS is disabled (also no RW momentum unloading). If the maneuver is large enough, one or more of the RW's will saturate (2000 rpm). As soon as one of the RW's saturates, its current command is zeroed. When all the active RW's have saturated, the vehicle will drift until the speed of one of the RW's falls below 2000 rpm due to friction or the control command calls for deceleration. During the RW maneuver the rate gain is changed which in effect creates a parabolic switching line (in the rate versus position phase plane). This parabolic switching line ensures a deadbeat response of the vehicle. (No variable rate gain is employed when the maneuver is made on RCS only.) Since the RCS is disabled during an RW maneuver, unduly high

disturbance torques (such as an RCS leak) could preclude ever meeting the end-of-maneuver tests. Therefore a check is made on the total system momentum (vehicle + RW's) to determine whether all the momentum can be stored in the RW's. If this is the case, the end-of-maneuver tests can be met, at which time the RCS is reenabled. If the total system momentum test is failed, the plus/minus y-axis RCS thrusters are fired alternately every computation cycle to trip the LPL and declare a failure.

6. Attitude Reference Update. There are three different methods implemented to correct the on-board quaternions for residual gyro drift, scale factor, and other errors. One method uses ST data; another uses SSA data; and the third uses telemetered ground data. Sun sensor updates take precedence over ground updates which takes precedence over ST updates.

a. Quaternion Update with ST Data. This update is done automatically every 64 sec provided that each of the two active ST's tracks a predetermined guide star. The updating is done about all three vehicle axes by adding the linearized quaternion difference to the on-board control quaternions Q_i. Since the difference normally is small, linearization is adequate. Mismatch between star information (four pieces of information are given, but only three degrees of freedom are available) is resolved by least square method (pseudoinverse).

b. Quaternion Update with SSA Data. This update is done on command only. It uses information from the narrow angle Sun sensor (no update is performed if the Sun is not seen by the narrow angle Sun sensor). The Sun sensor update also utilizes a linearized quaternion difference to align the actual Sun line-of-sight (LOS) with the desired Sun LOS (Sun LOS is in the vehicle x-z plane, but is allowed to be up to 15 degrees away from the z-axis).

c. Quaternion Update with Ground Data. The update by ground data is done via quaternion multiplication and is, therefore, exact for any size update (not restricted to a small attitude change as ST and SSA updates are).

7. Assessment and Concerns. Simulation performed by TRW and spot checks made by the Pointing Control Systems Branch of the Systems Dynamics Laboratory have shown that the ACDS can meet the pointing, maneuvering, and momentum management requirements imposed by the ACDS subsystem specifications. However several concerns were identified (they resulted in RID's Nos. 4, 7, 13, 16, and 17 and contributed to the generation of TRW Action Items Nos. 1, 7, 12, and 14):

a. The induced magnetic moments have to be reassessed to insure that they do not result in a shortening of the mission life due to increased RCS fuel consumption.

b. The RCS fuel consumption due to the exceeding of the 0.2 degree deadband of the RCS during FPTA reorientations has to be assessed versus the effect of an increased deadband on the RW desaturation efficiency.

The following concerns stem from the fact that the ACDS baseline operation stipulates RW desaturation prior to every maneuver, whereas this is not desired by MSFC to implement RCS fuel conservation by a judicious target sequence selection program.

c. The torque produced by the RW's deviates considerably in magnitude and direction from the command because of the highly nonlinear characteristics of the RW ac motors. This situation is aggravated further by limiting the RW current commands independently of each other (rather than proportionally) and by zeroing them independently upon RW saturation (rather than simultaneously upon saturation of any wheel). While the crosscoupling introduced by these conditions is not objectionable for the pointing operation (especially with an integrator in the loop), it becomes very detrimental for a large maneuver with an initial momentum stored in the RW's because this causes a large deviation of the eigenaxis from its original orientation (and no attempt is made to regain this original orientation). A study is in progress to assess how much initial momentum can be tolerated without violating the x-axis Sun constraint (the x-axis is not allowed to get closer than 30 degrees toward the sunline).

d. Another concern is the low total system momentum test level of 10 ft-lb-sec, at which the LPL is tripped during an RW maneuver. This level is consistent only with RW desaturation prior to every maneuver. It has to be raised to accommodate momentum management by judicious target sequence selection (a level of 25 ft-lb-sec was suggested to TRW in RID No. 7).

D. Assessment of Control Laws and Stability

The HEAO-B ACDS operation is made up of three control modes: NSA, celestial point (CP), and FSA. There are various submodes, states, and conditions of these control modes which have been reviewed but will not be

discussed here because the control algorithm changes only between the three identified modes. The performance requirements are defined in the HEAO-B ACDS Subsystem Specification [2].

The FSA is a hardwired (within the TA) analog system which operates on SSA inputs only. This mode and its implementation is identical to the FSA for HEAO-A. No further discussion on FSA will be made here.

The NSA and CP modes are DPA-controlled and require a nominal hardware complement. The control laws for both modes are basically rate plus position laws. The rate is derived from body-mounted gyros and the position from the on-board (quaternion) attitude reference. The on-board quaternion calculations are resident in the DPA. The NSA mode uses the hydrazine thrusters of the RCS as actuators. The pulse width modulator (PWM) output is the interface to the thruster system. The output from the PWM can vary from a thruster commanded ON time of 40 to 318 msec.

The CP mode can operate with either the RCS thrusters and/or the RW's as the control actuators. During normal operation of CP, the RCS has a deadband of 0.2 degree in x and y and 0.1 degree in z. The RW's are active simultaneously and normally keep the error from exceeding the deadbands. The RCS fires only when the capabilities of the RW have been exceeded. In the CP/RW mode, an integral term is added to the control law to aid in the reduction of attitude errors due to low frequency disturbances such as gravity gradient torques.

Based on the TRW analyses and simulations to date, and assuming their models were correct, there is no reason why the HEAO-B ACDS will not satisfy the requirements imposed upon it.

The only control and stability concerns at this time are:

1. The lack of analysis of the nonlinear isolator between the telescope and the spacecraft (RID No. 8, Appendix A).

2. The lack of a detailed definition of the HEAO-B ACDS subsystem test plans (RID No. 15, Appendix A).

3. The lack of a requirement for a formal review of the ACDS subsystem test results.

Concerns have been written as RID's and submitted at the HEAO-B ACDS CDR. Concern 3 prompted a memo from Mr. Wojtalik (EE71) to Mr. Meyer (HA23) requesting a formal review of the ACDS subsystem test results for HEAO-A and HEAO-B. The time and date of these reviews are pending.

E. Flight Software Assessment

1. Purpose and Operation. The flight software, designated FPH-B by TRW, is the on-board digital computer program for the HEAO-B ACDS. The flight software resides in each of two separate on-board digital computers, called the DPA (described in paragraph VI.A.1). The flight software provides the software functions and operations associated with the observatory attitude control and attitude reference as well as the support of command and telemetry processing. The detailed requirements are defined in D01137 [4] and the detailed design in D01138 [5]. The major functions which are to be performed by the software are summarized as follows:

a. Synchronization —The computation cycle of the program is synchronized to the spacecraft CDHS minor frame and major frame clocks to facilitate command and telemetry processing operations. The minor frame clock acts as an interrupt to the program and causes the computation cycle to be reinitiated each 0.320 sec. The major frame discrete is provided by the TA hardware every 128 minor frames (40.96 sec).

b. Command Processing — Overall configuration and moding control of the program on-orbit are effected by ground commands. Command inputs are processed by the program. Execution of the commands causes the flight program to be configured logically to the state specified by the commands.

c. Sensor Readout and Processing — Inertial measurements are provided by the RGA, SSA's, and the HRT star tracker. Attitude control is based upon SSA measurements during the NSA mode and upon the integrated output of the gyros during all other modes. The HRT star tracker provides celestial measurements for use in reference updating.

d. Attitude Reference — Algorithms associated with propagating and updating an estimate of observatory inertial attitude are contained in the program. The attitude reference is used by the control laws for position

information. The reference is propagated by algorithms which utilize only RGA data. The reference may be corrected by means of the HRT star tracker measurements, SSA measurements, or ground supplied data.

e. Attitude Control — Control law computations and logic are contained within the program to generate actuation commands to the RWA. The program generated commands are output to the TA which provides the conditioned electrical signals to the RWA electronics. During RWA unloading or upon ground command, the program also provides commands for the RCS for jet actuation.

f. Telemetry Processing — Collecting and establishing formats of quantities contained within the program as a result of the various readout and processing functions are done by the flight program as an allocated function in support of telemetry. Formats are specified on the basis of telemetry mode.

g. Memory Load Processing — On-orbit modification of the program data base or the program itself is accomplished via the memory load software function acting in conjunction with the input interface circuit signals. Memory load inputs are received from the ground via the command data link.

h. Self-Tests and Error Checking — Self-testing of the flight computer hardware elements and operations as well as detection of certain apparent logical errors will form the basis for software status data to be developed by the program for telemetry to the ground. These data are to serve as alerts to the ground controllers and as aids in redundancy management and fault detection.

2. Differences with HEAO-A. The HEAO-B Flight Program is based upon the HEAO-A Flight Program, with the following exceptions:

a. Enlargement of the RGA geometry matrix to accommodate six gyro channels arranged in a dodecahedron configuration.

b. Addition of logic calculations to read and command ST's. (Calibration of ST data is a ground function.)

c. Addition of logic calculations to read, process, and command RW's using drive current reference and modulated outputs to prevent tripping the undervoltage alarm.

d. Addition of logic and calculations to update the on-board attitude, either by ground command or autonomously, using ST data

e. Expansion of attitude target data for each target to add ST information

f. Change in I/O processing to include two more gyros, three ST's, and four RW's

g. Deletion of celestial scan mode

h. Changed number of selectable targets from 6 to 14

i. Modified command and telemetry interfaces and order of execution

j. Changed Sun sensor input module to preclude output of the event trigger if the flight program ever should be initialized in orbit with the Sun present.

k. Added calculation of system momentum in the RCS computation to protect the system against an open thruster during a RW maneuver. The RCS will be fired to trip the LPL if a preset value of momentum is exceeded (See RID No. 7).

l. Event trigger No. 3 is issued upon receipt by the DPA of the Gyro Reference Reset input

m. Other minor differences

n. Program size:

— HEAO-B: 7134 words out of 8192 (12.9 percent spare)

— HEAO-A: 4346 words out of 8192 (46.9 percent spare)

o. Timing Margin (worst case):

— HEAO-B: 269.8 msec out of 320 msec (15.7 percent margin)

— HEAO-A: 164.3 msec out of 320 msec (48.7 percent margin).

3. Ability to Perform Properly. The flight program is considered satisfactory based upon the HEAO-B ACDS Review Team results and the DPA Software Critical Design Audit and is expected to perform properly contingent upon the following conditions:

a. Successful completion and MSFC acceptance of the Flight Program Qualification Testing and Test Results

b. Successful completion and MSFC acceptance of the ACDS (subsystem) Testing and Test Results in Summary (see Concern No. 15 in Summary).

c. Successful closeout and MSFC acceptance of the flight software-related action items from the HEAO-B ACDS CDR and the concerns listed in the following paragraph.

4. Concerns. No "show stoppers" have been revealed in the flight software. However, five MSFC concerns involving the HEAO-B flight software are as follows:

a. Description — RID No. 19, Subject: Flight Software Discrepancies (Appendix A) specifies anomalies and/or concerns with the flight program requirements (D01137) [4], the flight program design (D01138) [5], and the flight program interface with the TA (EQ4-1100A) [7].

Action: The RID submitted at the HEAO-B ACDS CDR required TRW documentation correction and a TRW written response to be satisfactorily closed.

b. Description — The major concern remains from the HEAO-A Observatory CDR (Action Item No. 1) which also affects HEAO-B flight software. TRW still must resolve the issue of support to make software changes and resolve ACDS anomalies after November 15, 1976. Though HEAO-B ACDS and flight software development has now slipped to a February 15, 1977 completion date, manpower already is being cut. The issue of this support is still open.

Action: S&E is awaiting TRW and HEAO Project Office to complete the action.

c. Description — ACDS (subsystem) test adequacy, especially the adequacy of the simulated hardware models compared to the "real" environment, is an open issue. The performance of the flight software as a key part of the ACDS is validated in the subsystem tests. Therefore, these tests are of key importance in the software development process; the test adequacy must be assured by MSFC.

Action: An agreement was made at the HEAO-B ACDS CDR for TRW to address this concern (Agreement No. 10, RID No. 15).

d. Description — Three RID's (Appendix A) addressed ACDS issues which may require flight software constants changes. These are as follows:

1. RID 2 — Automatic initiation of NSA

2. RID 7 — Reassessment of total system momentum test level

3. RID 10 — RCS command pulse width.

Action: RID's must be answered and flight software changed if necessary.

e. Description — Three significant potential flight software changes were discussed at the ACDS CDR. No RID's were submitted because the changes represent new requirements. MSFC is processing one change now; SAO or Goddard Space Flight Center (GSFC) may submit the other two changes to the HEAO Project Office in the near future. The changes are:

1. Add guide star location data to the DPA telemetry for GSFC data reduction and correlation convenience.

2. Perform on-board angular separation check on guide stars prior to attitude update by the DPA (SAO, MSFC/Mission Operations, and GSFC desire [9]).

3. Add new option to disable or enable RW desaturation before each maneuver, without affecting automatic desaturation upon reaching normal saturation threshold. (SAO desires to maneuver to targets without automatic unloading prior to the maneuver.) These changes may cause significant

software impact because the spare memory (1000 words) in the DPA is not contiguous but is scattered throughout the memory in the several software modules.

Action:

1. Item 1 requires GSFC to request a change through the HEAO Project Office. No other action is anticipated until such an official request is submitted by GSFC.

2. Item 2 has been directed by HEAO Project Office who approved Reference 9, submitted by the Operations Development Division of the Systems Analysis and Integration Laboratory. Item 2 also is addressed in TRW Action Item No. 8.

3. Item 3 is being addressed by HEAO-B ACDS CDR TRW Action Item No. 7.

F. Assessment of Allied Subsystems Affecting ACDS

1. Reaction Control Subsystem (RCS).

a. Purpose and Operation. The RCS is a monopropellant hydrazine propulsion system which supplies impulse for maintenance of the observatory attitude and RW angular momentum unloading. The RCS consists of two propellant/pressurant tanks, two redundant groups of six 1.0 lbf thrusters and the associated latching isolation valves, fill/drain valves, filters, pressure and temperature instrumentation, and thermal management hardware.

Propellant is fed to the thrusters from the propellant tank assemblies which operate in a blowdown mode; i.e., tank pressure decays as propellant is displaced from the tank by the fixed quantity of gaseous nitrogen (GN_2) pressurant. With the mission hydrazine propellant load of 268 lb, the operating pressure range of the tankage is 350 to 140 psia.

The RCS will be capable of providing a total linear impulse of at least 19 000 lb-sec, where all impulse is obtained using firing command pulses of no less than 0.040 sec duration. Thrust differential between any two thrusters which provide torque about the x and z spacecraft axes is $\lesssim 5$ percent at beginning of life (BOL).

The RCS schematic is shown in Figure 1. The RCS receives all thruster firing commands from the ACDS's valve driving electronics (VDE) located in the TA. These VDE receive their driver commands (1) automatically from the ACDS DPA, or (2) by real-time ground command to the ACDS. The ground issued manual firing commands (40 msec minimum duration) can be used "in addition to" or "in lieu of" the "on-board" automatically generated ACDS firing commands.

The observatory is launched with all crossover valves closed (open in flight) and all VDE's disabled. At separation from the Centaur, a Propulsion Enable (PE) signal is generated automatically which enables the requisite VDE's.

All 12 thrusters (i.e., six in bank 1 and six in bank 2) are designed with normally closed dual coil-dual seat solenoid valves for ON/OFF control of propellant flow. The "A"-Coils on all 12 valves are hardwired to TA-A while the "B"-Coils are hardwired to TA-B.

Two ACDS signals can reconfigure automatically the isolation valves:

- LPL — LPL detects anomalous condition and (1) closes both thruster bank isolation valves, (2) disables catalyst bed heaters, (3) disconnects both 28 Vdc supplies to thruster valves, and (4) signals the spacecraft integration assembly (SIA) which removes all nonessential loads from the bus.

- UV — UV signal (1) opens primary bank isolation valve, (2) connects 28 Vdc supply to primary thruster valves, (3) closes redundant bank isolation valve, (4) disconnects 28 Vdc supply to secondary thruster valves, and (5) disables all catalyst bed heaters.

The third valve — same design as the "ISO" valves — is used as a "crossover" between bank A and bank B and can only be controlled by ground command (i.e., no automatic reconfiguration).

The RCS/ACDS schematic which illustrates the command interface between the two subsystems for failure mode operation is shown in Figure 2.

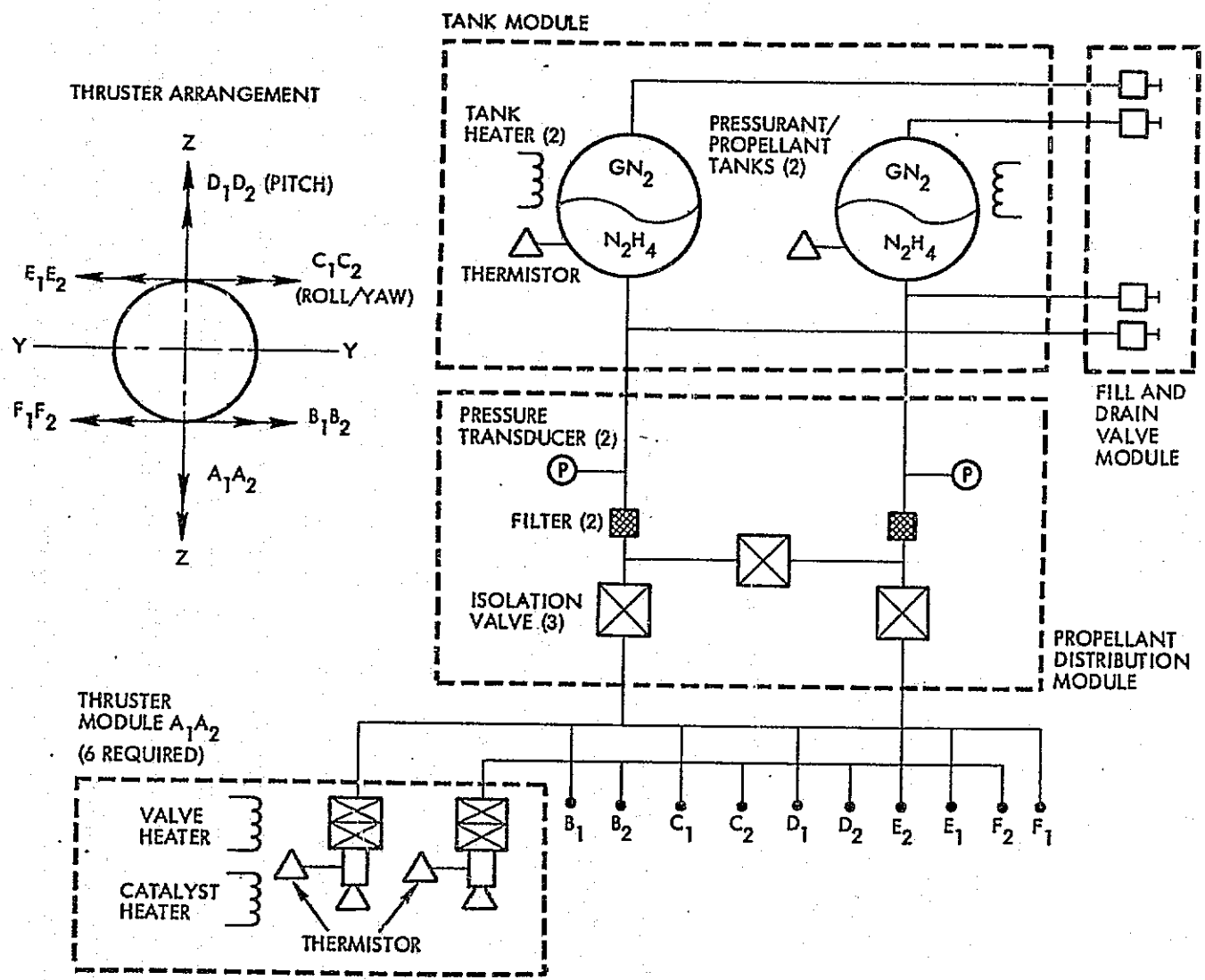

Figure 1. RCS schematic.

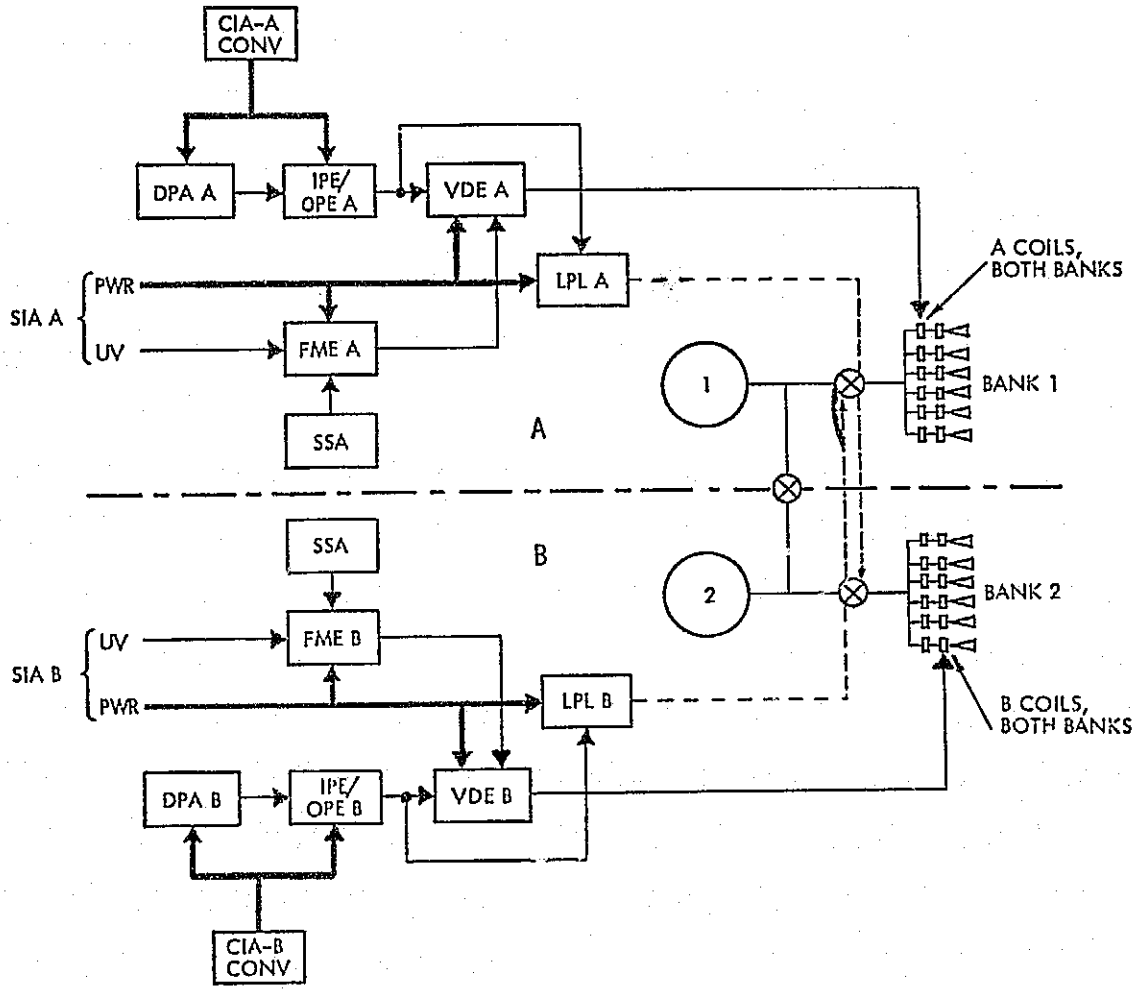

Figure 2. Command interface between RCS and ACDS.

b. Mathematical Modeling. The RCS as such is not modeled mathematically. The ACDS design verification model uses the following to represent the RCS thrusters:

- Thrust — Regarded as a linear function of tank pressure, with these end points:

0.93 lbf (BOL)

0.30 lbf (EOL)

where EOL is end-of-life value.

- Pulse Width — The simulation assumes a square wave thrust pulse of 0.030 sec, which is compatible with the impulse delivered in an actual thruster firing of approximately 0.040 sec. It is expected that the actual numbers from the RCS qualification test will be incorporated into the ACDS simulation at a later date.

- Valve Delay Time — Not used in the design verification model — may have been used in the stability analysis model.

c. Similarities and Differences with HEAO-A. The RCS hardware for HEAO-B is identical to that for HEAO-A. The differences are in the duty cycles. HEAO-A and HEAO-C use RCS control only, while HEAO-B employs RW control with momentum unloading provided by the RCS.

d. Ability to Perform Properly. The RCS is expected to perform properly on the HEAO-B mission, based upon successful flights of the dual thruster module (DTM) on Pioneer 10 and 11, and successful qualification for FLTSATCOM, HEAO-A, and Program 8623 (a classified program). All the other RCS hardware similarly has flown on previous missions.

The hot-fire qualification test program has been completed successfully, and the DTM demonstrated 11 640 lb-sec impulse, 1200 sec of steady-state operation, 108 062 bed ambient starts, 203 721 total starts, and 80 lbm of N_2H_4 total throughput during a combined HEAO-A and HEAO-B mission duty cycle. Thrust degradation at the end of qualification testing was less than 10 percent on thruster Q001, and less than 16 percent on thruster Q002 (steady-state).

All the other hardware, such as tanks, latching valves, pressure transducers, etc., have demonstrated capabilities on other programs which are in excess of those required by HEAO-B. They have been qualified by similarity.

e. Concerns. Concerns are as follows:

1. All TRW documentation should reflect a command pulse width of 40 msec minimum. A RID was written to implement this change.

2. The spacecraft should be launched with the crossover valve closed. It will be opened for normal flight operations to permit simultaneous usage of propellant from both tanks. TRW has agreed orally to this.

3. Several catalyst bed heaters failed during component qualification for FLTSATCOM. TRW checked 100 percent of the HEAO heaters and rejected all of those which showed a tendency toward the same failure mode. Furthermore, failure of a single heater on a given thruster will not prevent the successful operation of that thruster because there are three per thruster.

4. If the operational mode of the HEAO-B spacecraft as defined by TRW is correct, a sufficient number of "cold starts" (catalyst bed temperature approximately 70°F) have been demonstrated. If, however, more than approximately 75 such starts are anticipated, a concern exists because cold starts decrease overall thruster lifetime.

2. Electrical Subsystem.

a. Capabilities. The design of the electrical power and signal distribution between the electrical components of the ACDS was reviewed in detail and appears satisfactory. Review of the design of the control integration assemblies (CIA's) revealed that they are similar to that of other distribution boxes used on the HEAO-B spacecraft, e.g., the power control unit (PCU), spacecraft integration assemblies (SIA's), and experiment accommodation assemblies (EAA's). All of these distribution assemblies are made up of a number of "slices" or modular packaged electrical components. Spacecraft distribution boxes performing similar functions are built from slices of the same design. Review of the ACDS electrical cable harness design and circuit protection methods revealed them to be similar to that used on other subsystems of the HEAO-B spacecraft. Redundancy of wiring in the power distribution circuits of many circuits of the ACDS is the same as was done for other HEAO-B spacecraft subsystems.

The basic difference between HEAO-A and HEAO-B is that the HEAO-B ACDS is larger by the addition of four RWEA's, four RWA's, one gyro electronics assembly, and one RGA (one RSU and one ECU).

The ACDS is supplied electrical power (28 ± 5 Vdc) from the spacecraft power bus located in the PCU. This power bus is a single bus and is a potential "single failure point" for the HEAO-B spacecraft. The TRW design group has taken precautions to protect the power bus from failure inside the PCU. All external electrical load circuits fed from the power bus to the spacecraft components are fused to protect the electrical cable harness and power bus.

Electrical power is supplied to the bus from three batteries and an array of solar cells. Loss or failure of a single battery or a portion of the solar array results in a degraded power output, but not loss of the total mission. The bus voltage is prevented from exceeding 33 Vdc by use of a shunt regulator system that primarily operates in conjunction with the solar array which supplies power to the bus during the sunlight portion of the orbit. If the spacecraft electrical loads on the power bus are "small" and the solar array output is "high," the shunt regulator system is required to "load" the power bus and thus maintain the bus voltage at 32.7 V maximum. During orbital operations, battery power is always available to the power bus. An on-board detector called the UV sensor can initiate corrective action to switch off all nonessential loads from the power bus if the bus voltage drops to a preset level (23.5, 24.5, 25.5, or 26.5 V). Operational "undervoltage" can result from many causes, including abnormal power usage by the experiments or spacecraft subsystems, abnormal solar array orientation due to anomalous attitude control performance, or a failure in the power subsystem. Whenever a preset bus voltage is reached, the following automatic operations occur in the HEAO-B spacecraft:

1. Experiment nonessential power is switched "OFF."

2. Experiment standby heaters are switched "OFF."

3. Nonessential ACDS equipment is switched "OFF." (DPA, RGA, including heaters, CIA converter, RWEA's and RWA's).

4. RCS catalyst bed heaters are turned "OFF." All other RCS heaters remain "ON."

5. RCS thruster commands are switched to redundant thruster bank.

6. Data handling (i.e., TLM) is switched into "engineering" format.

7. ACDS is switched into FSA mode. Transferral of the ACDS into this mode results in automatic reacquisition of the Sun. The spacecraft continues to operate in this manner until the OCC identifies and corrects the anomaly which produced the bus UV.

b. Concerns. There is concern over the fact that if the LPL circuit triggers during orbital operations, the observatory is placed in a drift (no control) mode awaiting correction of the anomaly from the ground or if it cannot be corrected in a timely manner, the UV sensor is depended upon to energize the RCS thrusters and reacquire the Sun in the z axis. It is strongly felt that use of the UV sensor is not a reliable means to trigger the FSA mode after an LPL failure. To insure observatory survival, it is recommended that the LPL circuit also immediately trigger the FSA mode rather than await the UV signal.

RID No. 5 on this concern was submitted to TRW at the HEAO-B ACDS CDR on October 19, 1976.

c. Summary of Findings. Findings were as follows:

1. The remaining capacity in the new HEAO batteries is marginal even at the high setting (26.5 V) of the UV sensor. It is estimated that 21 amp-hr capacity remains in the batteries at this bus voltage level. This would give approximately 6 hr of battery life with only survival electrical loads energized.

2. TRW is opposed to switching immediately to the FSA mode in case of a LPL failure because they claim the FSA mode results in a waste of RCS propellant. (TRW has not shown the propellant tradeoff.)

3. Chance of a LPL failure during the mission is high (0.750).

d. Conclusions. Conclusions are as follows:

1. The UV sensor is a poor indicator to rely upon for survival of the spacecraft. The UV sensor will be required to be "disabled" and "enabled" many times during the HEAO-B mission when momentum management of the RW's causes the bus voltage to drop. This large number of cycles of disabling and reenabling of the UV sensor raises the question of whether the UV sensor would be enabled when it might be needed. Use of the UV sensor tends to give a false sense of security for protection of the spacecraft.

2. If the ACDS is unchanged, the burden of spacecraft survival must now be entirely placed upon the Mission OCC personnel. Around-the-clock vigilance will be required to detect immediately and correct all anomalies that could eventually result in loss of the spacecraft.

3. In comparing the choice of conserving RCS propellant and relying upon the mission operations personnel to detect quickly and correct the anomaly before the batteries are "dead" or immediately switching to the FSA mode in case of a LPL failure, the latter is recommended.

3. Ground Software.

a. Purpose and Operation. The ground support software for HEAO-B is being designed, implemented, and verified by GSFC. Support software is broken into two categories: OCC and post facto Attitude Ground Support System (AGSS). The OCC software consists of preliminary processing, display, and human decision based on spacecraft telemetry as well as routing of spacecraft attitude sensor information to the AGSS. The AGSS has five optional functions which it can perform: initial reference determination, calibration, Master Observing Program/Detailed Observing Program (MOP/DOP), reference reacquisition from a lost condition, and generation of uplink commands.

(1) Initial Reference Determination — Purpose of initial reference determination is to determine the attitude in ECI coordinates of the spacecraft subsequent to ACDS and ST turn-on. Due to physical limitations of the ST, high voltage of this instrument may not be turned on for 48 hr after launch.

(2) Calibration — Software for calibration of the attitude sensors is an option of the AGSS. Basically this option provides solutions to partial derivatives of the state quaternion with respect to the biases and misalignments. It is expected that this option will be performed only once after critical sensor turn-on and when a different attitude sensor is turned on.

(3) MOP/DOP — This software yields an optimum observing plan at least 1 week in advance of target viewing while keeping within guidelines set by the experimenter and/or mission operations.

(4) Reference Reacquisition from a Lost Condition — This software has not been defined completely yet, but will include all or most of initial reference determination (1) together with a plan for recovering from being lost "in the small."

(5) Generation of Uplink Commands — This option codes the resulting information from Paragraphs (1), (2), (3), and (4) into a format that the on-board system understands. Mission operations people uplink this information and/or commands to the spacecraft by computers in the OCC. This option is not defined outside of that part used by HEAO-A.

b. Simularities and Differences with HEAO-A. Paragraphs (3) and (4) of this section did not exist in HEAO-A. Paragraph (1), Initial Reference Determination, uses the same method as HEAO-A except the spacecraft scan rate is reduced from 0.18 to 0.1 degrees/sec and the field-of-view of the of the ST from 8 × 8 to 2 × 2 degrees. Paragraph (5), Generation of Uplink Commands, is the same as HEAO-A except some commands are not used for HEAO-A.

c. Ability to Perform Properly. There is no reason to believe any of the software in this section will not work properly. The supporting analyses and a ground software acceptance test plan will be presented to MSFC by GSFC during January 1977.

d. Concerns. Initial reference determination has not been shown to work with HEAO-B limitations of reduced scan rate and tracker field-of-view. This concern is expressed in a RID to HEAO-B ACDS CDR data package. The RID was accepted, and supporting evidence was documented in mid-November 1976. Until this evidence is analyzed, the concern remains.

4. Star Tracker (ST) Assembly.

a. Purpose and Operation. The ST, which is built by the Honeywell Radiation Corporation of Lexington, Massachusetts, provides celestial pointing capability for the HEAO-B Experiment and the observatory with up to 1.0 arc sec accuracy.

A reflective lens optics system and an image dissector photomultiplier tube, using magnetic deflection and focusing, form the heart of the system. This combination generates a search pattern over a 2 × 2 arc degree field-of-view by deflecting an instantaneous image of 2 × 2 arc min to scan in a digital raster of 64 × 64 with 4096 discrete positions. When a star of proper magnitude is detected (determined by the photoelectron count per sample and being greater than a preset number), the tracker switches to the "track" mode.

The track mode forces the image to scan in a square pattern of four separate positions. With an error signal derived from the summation of the four image positions, a closed servoloop allows the tracker to follow the radiometric center of the star.

The mean deflection error current required to keep the image patterns around the center of the star represents the analog position of the star image in the tracker field-of-view. This signal is averaged 32 times and supplied as a position output every 320 msec. The output is via a 40 bit word with 15 bits (weighing 0.225 arc sec/bit) for the x axis position and 15 bits for the y axis. The remaining bits are for system status and star magnitude.

The tracker has a shutter which is closed by a bright object detector when the telescope is too close to a bright source. A light shade on the tracker allows it to operate as close as 11 degrees to the Earth limb of a sunlit Earth.

b. Similarities and Differences with HEAO-A. The ST on HEAO-B is an entirely different tracker from the one used on HEAO-A. The one similarity is the image dissector tube used in each tracker, type F4012 manufactured by ITT. The procurement specifications are somewhat higher for the HEAO-B tracker.

c. Ability to Perform Properly. Honeywell Radiation Corporation has completed testing of the engineering model, and they are now completing testing on the qualification model. There are no indications at this time that the tracker will not perform to specifications in orbit. Obtaining 1 arc sec accuracy with a tracker in space is approaching the state-of-the-art, but test results have indicated that this can be obtained.

d. Concerns. Historically there have been concerns with flight ST about the protective shutter operation because it is usually the only electromechanical part in the ST system. It is subject to mechanical binding or improper operation due to thermal and vibrational stresses. The shutter in the HEAO-B tracker is extremely simple and should be very reliable. The only problem experienced with this shutter was due to an improper magnetic shield design which impeded the magnetic operation of the shutter motor. The problem was corrected by increasing the spacing between the shield and the motor housing. The Guidance, Control, and Instrumentation Division of the Electronics and Control Laboratory has reviewed the design change and concurs in it.

5. Command and Data Handling Subsystem (CDHS).

a. Purpose and Operation. The "command" and "data handling" functions are grouped into a common subsystem and produced as a common assembly (DHA). The CDHS performs three basic functions:

1. Command Processing — The subsystem demodulates, authenticates and distributes ground commands, and processes on-board stored commands to control spacecraft operations.

2. Telemetry — The subsystem samples, conditions, and formats science and spacecraft data for real-time telemetry transmission. The subsystem also provides precision timing pulses to experiments and spacecraft users.

3. Data Storage — The subsystem controls the two on-board tape recorders for storage of formatted data during periods when the spacecraft is out of sight of a ground station and transmits stored data when ground station communications are reestablished.

In addition to performing the task of demodulating, decoding, and distributing real-time commands to the spacecraft and experiment users, the command function also loads data into the DPA memory and the SCP memory. This is accomplished by means of a direct interface between the primary command decoder (PCD) and the TA, and the PCD and the SCP.

The data handling portion of the CDHS encompasses the telemetry and data storage functions. It operates in a real-time mode, telemetering data at a fixed 6.4 kbps rate to the baseband assembly and transmitting the data to the two tape recorders.

b. Similarities and Differences with HEAO-A. HEAO-B CDHS is essentially the same as HEAO-A.

c. Ability to Perform Properly. There is no reason to believe that it will not perform properly.

d. Concerns. The only known concern relates to the reliability of the SCP. MSFC has directed TRW to implement a change in which the SCP would be used as the prime means of initiating NSA after ascension. TRW

has not accepted this change (the change is implemented in the DPA software, however) because of their concern for the reliability of the SCP. MSFC submitted a RID at the ACDS CDR concerning this matter (RID No. 2).

VII. CONCLUSIONS

The HEAO-B ACDS Review Team has completed its four month assessment of the technical adequacy of the HEAO-B ACDS. As a result of its detailed analysis of the ACDS, the Team has found no reason why the ACDS will not perform its specified functions adequately. However, 23 concerns that point to potential difficulties were found and delineated; 18 of these are in the form of RID's (Appendix A). The concerns are summarized in the Summary of this report.

REFERENCES

1. HEAO-B CEI Specification. HEAO Repository Document HZ T-72 M 10067, Rev. No. A, November 15, 1974.

2. HEAO-B ACDS Subsystem Specification. TRW No. SS7-29A, January 6, 1976 (Configuration and Data Management Data, May 22, 1976).

3. HEAO-B Attitude and Control Determination Subsystem Critical Design Review. TRW 2600-460-042, October 19, 1976 (2 Volumes).

4. Flight Program Requirements Document for HEAO-B ACDS. D01137A, October 20, 1976.

5. Flight Program Design Document for HEAO-B ACDS. D01138 (Draft), September 22, 1976.

6. Modification #121, Contract NAS8-28300, January 22, 1976.

7. Equipment Specification, Transfer Assembly, HEAO. EQ4-1100A, July 18, 1975.

8. Equipment Specification, Digital Processor Assembly, HEAO. EQ4-1089F, December 10, 1975.

9. Inclusion of Guide Star Verification Test in HEAO-B DPA Flight Software Program. ECR EL11-0002.

APPENDIX A

RID's SUBMITTED BY HEAO-B ACDS REVIEW TEAM

PRECEDING PAGE BLANK NOT FILMED

REVIEW ITEM DISCREPANCY (RID)

ID:	DATE: October 13, 1976	PAGE OF
ORIGINATOR: S. M. Seltzer	SCHEDULED COMPL:	RID NO. 1
ASSIGNED TO:	NASA CHAIRMAN:	END ITEM NO.
ASSIGNED BY:		REVIEW:

SUBJECT: Updated HEAO-B ACDS CDR Documentation

DESCRIPTION: The HEAO-B ACDS CDR documentation is the latest description of the ACDS. It probably is the only ACDS documentation that will exist until the Flight Readiness Review. Hence, it is imperative that it be maintained as a correct, up-to-date cohesive document until the HEAO-B actually is launched. This updating should take place in the form of errata sheets or page change sheets (i.e., updated pages). TRW memos are not acceptable. The end result will be a single cohesive set of ACDS documentation that engineers can refer to with assurance that they are not looking at obsolete or incorrect information. To date, the following corrections are to be incorporated into the CDR documentation. They are identified by Item Numbers referring to Enclosure 1 (the MSFC HEAO-B ACDS Review Team's comments) and Enclosure 2 (TRW's informal response and comments to Enclosure 1).
The following items should be corrected: Items 1-5, 7, 11-13, 16, 17, 19-22, 23 [designate the two referenced weights as "actual" (29.5 lb) and "spec" (30.5 lb)], 24 [designate the two motor torques as "spec" (17.0 in-oz) and "capability" (23-50 in-oz)], 25-28, 30 (allied to Item 28), 32, 33, 35 (need to alter grammer to make the meaning clear), 36-38, 39 (same comment as Item 27), 41 (see TRW's comment: either summarize Action Items, Arguments, Alerts, and Responses as an appendix to the CDR documentation or append the referenced PDR closeout document), 42 (define dashed lines), 46, 48, 50 (write up TRW's response to MSFC's question), 51 (want a summary located in one place in the CDR documentation), 52-54, 55 (want a summary located in one place in the CDR documentation, 59.

RECOMMENDATION:

CLOSEOUT

ACTION TAKEN:

ACTIONEE (ACTIONEE):	APPROVAL (SUPERVISOR):	ORGINATOR:	NASA PROJECT CLOSURE:
DATE:	DATE:	DATE:	DATE:

ORIGINAL PAGE IS OF POOR QUALITY

RECORD OF COMMENTS ON PUBLICATIONS

DATE October 4, 1976

SUBJECT HEAO-B ACDS CDR (26000-460-042, 19 October 1976)

REVIEWER NOTES FROM: S. M. Seltzer, HEAO-B ACDS Review Team, MSFC

ITEM NO.	PAGE	PARAGRAPH	LINE *	COMMENT (Exact wording of recommended change must be given)
1	1-3	--	--	Glossary is incomplete (e.g., DHA, PSU, TRIU, NVE, etc).
2	2-1	2.1	14	Add: "...on-board logic upon either separation from..."
3	2-1	2.1	15	Do you want to use the word "INSIPIENT" (as shown) or the word INCIPIENT (different spelling, different meaning)? Is its use as an adverb modifying "catastrophic" the use you really intend?
4	2-2	--	--	Figure 2-1 does not indicate inputs to RGA 5 and 6 from non-essential bus power and switching commands. No inputs to RGAs from Transfer Assembly are indicated. What is the significance of dashed and solid arrows from Transfer Assemblies for Star Tracker control?
5	2-3	--	--	Figure 2-2 is not labeled properly for RGA orientations. Also, it does not show the angle between RW's and major axes of spacecraft.
6	2-5	1	last	Question. Are narrow angle ZSSA sun aspect signals used actively in the on-board control, or only to augment ground attitude determination?
7	2-5	2	6	Replace "sun point failure mode" with "first sun acquisition mode." This should be done throughout the documentation.
8	2-5	2	8	Question. What actions have been taken to assure correct telemetry signals, i.e., no inversions as received on ground?
9	2-7	2.2	last sent.	Add: The present planned operation is to enter NSA via command from the SCP before loss of tracking at Ascension.
10	2-7	--	--	CEI and ACDS subsystem specification nomenclature mode should be made compatible.
11	2-7	2.2	11	Comment: FSA is also initiated by LV separation signal.
12	2-8	2.	4	During pointing, the x-z plane is constrained to ± 1° of the sun line. This should be stated.
13	2-8	3	5	Star tracker data correction is done on the ground.
14	2-8	--	--	When is the last possible date for defining operating characteristics and calibration data for the ST without impacting either the flight ACDS or the ground software?

* Reference to line number within the paragraph or subparagraph.

MSFC - Form 1988 (August 1968)

Encl 1

ORIGINAL PAGE IS
OF POOR QUALITY

RECORD OF COMMENTS ON PUBLICATIONS

DATE October 4, 1976

HEAO B ACDS CDR (26000-460-042, 19 October 1976)

S. M. Seltzer, HEAO-B ACDS Review Team, MSFC

ITEM NO.	PAGE	PARAGRAPH	LINE *	COMMENT (Exact wording of recommended change must be given)
15	2-9	1	2	Question. What is the TRW rationale for not switching immediately to FSA instead of waiting for under voltage?
16	2-9	2.2	add	Describe LPL and when enabled so it all can be found at one location in documents.
17	2-10	--	--	On this and all other such blank pages, the comment "INTENTIONALLY LEFT BLANK" should be placed. Otherwise the recipient might suspect a printing error.
18	2-11	2.3		When do we find out if the component specs are met? In several places TRW suggests need for more tests, (Example: App. E, memo HEAO-76-460-178, page 31).
19	2-12			To what do the four asterisks refer?
20	2-12			RW weight is 30.5 pounds instead of 29.5.
21	2-15	5.3.4.2	7	RGA assembly arrangement picture is incorrect. This item was wrong in the PDR; we recommended at that time that it be corrected; this has not been accomplished and is still incorrect!
22	2-15			Spec is stated incorrectly.
22a				Drift Characteristics: g-insensitive value should be 5.0°/HR instead of 3.0°/HR.
22b				Voltage Sensitivity: g-insensitive value should be 0.01°/HR/VOLT.
22c				Magnetic Field Sensitivity: g-insensitive value should be 0.2°/HR MAX.
23	2-21	--	--	RW weight is 30.5 pounds instead of 29.5.
24	2-21			o Motor Torque: 17.0 in-oz. This is the number we have recommended be standardized in the CEI and ACDS specs. However, it is not the value used in a number of recent TRW memos.
25	2-21			o Tachmeter Output: This value is misleading and might lead the reader to assume a D.C. value, rather than pulses, as the output.
26	2-22	--	--	Direction of arrow between Switching Regulator and Pulse Width Modulator should be reversed.

* Reference to line number within the paragraph or subparagraph.

MSFC - Form 1888 (August 1968)

[illegible] OF COMMENTS ON [illegible] | October 4, 1976

[illegible] (2000-460 [illegible], 19 October 1976)

[illegible], HEAO B ACDS Review Team, MSFC

	[illegible]	PARAGRAPH	LINE	COMMENT (Be [illegible] wording of recommended change must be given)
	3-1	3	3	Should include all current SCN's (SCN 15?) instead of stopping at SCN 7.
[illegible]	3-2.3			Define probability as it applies in each requirement. Make it a useful quantity. Insert an example.
29	3-3			Define jitter per [illegible] submitted by the Pointing Control Systems Branch (ED12), MSFC.
30	3-3	3.1.1.2.5	2.4	What is significance of two probability values and how is each verified?
31	3-3			Add a subparagraph 3.1.1.1.2 - Performance Point Mode: Sun line within 15° of S/C z-axis. The zx plane shall be within ± 1° of the sun line.
32	3-4	...3.2.2		Update Venting per SCN 9, the experiment venting gases total angular momentum < 500 ft-lb-sec, instead of TBD.
33	3-4	...3.2.3		Update per SCN 14, separation rates, x- 1.1°/sec, axes perpendicular to x- 1.5°/sec.
34	3-4	...3.2.4		Change the value 150,000 gauss cm^3 to correct one (see recommended spec changes from Review Team).
35	3-4	...3.2.6		Does "Provided;" refer to "no single point failures?"
[illegible]	3-5	...5.8.2		Flight Program: Insert comma: "...mode control, not used..."
37	3-5	...5.8.2		Flight Program: Define "emergency" mode as FSA mode.
38	3-5	--	--	Power: Put a numerical value in rather than "TBD."
39	3-6	--	--	SCN summary should include at least SCNs 1-15 or later as appropriate.
40	4-1	4.2	last	Question: Was ACDS changed to incorporate automatic initiation of NSA at separation?
41	4-2,-3			Where omitted (such as in Action Items 6 and 7), summarize the responses to each Action Item.
42	5-3	Fig. 5-1	--	How does one get from Mode F-1 to Mode 0 (off)? Which modes are impossible to get to from which other modes? Identify what dashed lines signify.

[illegible] to line number within the paragraph or subparagraph.

[illegible] 1968 (August 1968)

ORIGINAL PAGE IS
OF POOR QUALITY

1	[illegible] OF COMMENTS ON PUBLICATIONS			October 4, 1976
2	[illegible] CDR ([illegible], 19 October 1976)			
3	[illegible], HEAO [illegible] ACDS Review Team, [illegible]			
		PARAGRAPH	LINE *	COMMENT (Exact wording of recommended change must be given)
	[illegible]	Mode 0	2	Question: What telemetry is received in Mode 0? Is [illegible] on or off in Mode 0 (off)? Are there substates of Mode 0?
[illegible]	5-5	Mode 4	6	Question: What determines the 64 second implementation? Will this update have to be more often if rate gyros drift more than allowed by spec?
[illegible]	5-9	5.3.1.1		Some items are not compatible with similar items in the Mission Control Procedures (correct title?) [illegible]-04S.
46	5-8	Table 5-2		In the last para. of p. 5-7, three commands are identified as critical. They should be so identified on Table 5-2.
47	5-10	5.3.2		Same comment as Item 45 above (Example: "TA-A First Mode Leave "in this document is identified as "TA-3..." in MP-04S; the latter probably is correct).
48	5-13			The sentence "The wheels are then run to 2000 RPM and the maneuver begins" should read "The wheels are accelerated and the maneuver begins."
49	5-24	--	--	Figure 5-9 should indicate interface between CPE and RGA's.
50	6-4	6.2.1		Recommend change in procedure to allow for RG calibration before beginning the scan for ground attitude determination and setting the NSA scan rate as high as possible (in real time).
51	6-8		Add	Discussion on NSA capability vs requirements. Include both rate and attitude initial conditions.
52	6-20	Table 6-4		Reconcile gains in table 6-4 with those in App. E, memo HEAO-76-460-175, p.2. Reconcile difference of maximum rate gain (15) of same memo and Flight Program Requirements Document D01137 (500).
53	6-21	6.3.2.1		Discuss resolution of problem of not meeting "Absolute pointing accuracy" when guide stars are separated by less than 1.8 degrees.

* Reference to line number within the paragraph or subparagraph.

Form 1908 (August 1968)

RECORD OF COMMENTS ON PUBLICATIONS

DATE: October 4, 1976

HEAO-B ACDS CDR (26000-460-042, 19 October 1976)

RECOMMENDED FROM: S. M. Seltzer, HEAO-B ACDS Review Team, MSFC

ITEM NO.	PAGE	PARAGRAPH	LINE *	COMMENT (Exact wording of recommended change must be given)
54	6-28	6.3.2.1		Describe the sloshing and structural interaction simulations that have not been released. (See App. E, memo -178, p. 31, which says additional modelling of slosh is recommended. Memo also shows marginal stability for variations considered and says additional testing of RWEA is required, p.20).
55	6-42	6.4.2.1		Summarize numerically the requirements for separation rates and attitude initial conditions along with the capabilities.
56	13-7			Provide detailed HEAO-B ACDS subsystem test plans (describe all test cases planned).
57	14-1	14.2	10-16	There is no problem with the system momentum test no matter what initial momentum the maneuver was started from.
58	14.2	14.4		Since the momentum at maximum FPTA speed is only slightly more than 1 ft-lb-sec there is no problem.
59	App. B	Software Documentation		D-1137 of 21 June 1976 should be referenced, rather than 12 January 1976.
60				General Comments 1. The earth magnetic field is modeled as a tilted dipole (HEAO-74-460-084) with the justification that magnetic torques are small with respect to the gravity gradient torques. Since the recognition of a 4π error in the magnetic torque model this assessment may not be true any more and a more accurate model of the earth magnetic field may be necessary.
61				2. Describe planned activity and schedule for resolving effect on ACDS of telescope to spacecraft isolators.
62				3. In the Appendices: Portions of the TRW memos are obsolete and hence incorrect. These obsolete passages should be identified.
63				4. The first time the period for one revolution of the RW is mentioned, the magnitude should be described as well as the fact that the direction of revolution is identified.

* Reference to line number within the paragraph or subparagraph.

MSFC - Form 1988 (August 1968)

ORIGINAL PAGE IS OF POOR QUALITY

RECORD OF COMMENTS ON PUBLICATIONS

DATE: October 4, 1976

HEAO B ACDS CDR (26000-460-042, 19 October 1976)

S. M. Seltzer, HEAO-B ACDS Review Team, MSFC

ITEM NO.	PAGE	PARAGRAPH	LINE *	COMMENT (Exact wording of recommended change must be given)
64	--	--	--	RCS command pulse width should be 0.040 sec, not 0.030 sec.
65	6-46	6.5	--	What is the projected life time for HEAO-B with 268 pounds of propellant, based upon RCS Qualification Test Data and latest ACDS simulations?
66	--	--	--	Initial acquisition requirement has not been complied with as stated under capability column. The documented supporting analysis has not been shown applicable.

* Reference to line number within the paragraph or subparagraph.

MSFC-Form 1988 (August 1968)

TRW COMMENTS 6,7 Oct 76

1. Agree that the glossary is incomplete. Intent was not to provide a complete listing but rather provide only top level terms.

2. Agree with wording as stated.

3. Intended spelling was "incipient".

4. Inputs to RGA's 5 & 6 should be same as others. Block diagram was intended as a top level representation of general signal flow, and not show details of wiring. Dotted lines should have been solid.

5. Proper RGA orientations are given in HEAO-76-460-213. Gyros 1 & 2 are correct as shown. The remaining axes are as follows: gyro 3 should be minus 4, gyro 4 should be minus 3, gyro 5 should be minus 6, and gyro 6 should be minus 5.

   The angle between the spacecraft y and z axes to the projection of a wheel in the y-z plane is typically 45°. Angle from +x axis to any wheel rotation axis is typically 70°.

6. The narrow angle ZSSA sun aspect signals are additionally used for the "fine point" capability in Normal Sun Acquisition mode to reduce errors caused by earth albedo and null-offset. The narrow angle data is also used for sun sensor attitude reference updates.

7. A sincere effort was made to make this correction throughout the document. The oversight should be corrected as stated.

Enc 2

ORIGINAL PAGE IS
OF POOR QUALITY

8. Corrections were made in DPA software to correct dimensions resulting from the yellow book error. Code data has been checked in OCC requirements and verified on the HEAO-A spacecraft.

9. An SCN against HEAO-A is outstanding which includes this capability. A similar SCN should be filed for HEAO-B. The reason for the outstanding status of the SCN is reliability of the SCP use since such use may be a single point failure if inadvertently started early in the launch sequence.

10. The use of the word "point" in all three modes is confusing. We agree with the recommendation of the MSFC HEAO-B ACDS Review Team to change the wording of the CEI.

11. True.

12. The ± 1° constraint is an operational constraint only to limit the required scope of thermal analyses. This constraint is not a requirement on ACDS and has no impact on the ACDS design.

13. True. The third bullet on page 2-8 should read as follows: "Automatic updating of the attitude reference using on-board star tracker data in pre-distorted coordinates".

14. Changes in star tracker operating characteristics must be assessed on an item by item basis to determine impact (if any) on flight software. Calibration corrections are now done on the ground and therefore do not impact flight software. Impact on ground software cannot be assessed by ACDS since this is a GSFC responsibility.

[illegible] is not [illegible] to [illegible] [illegible] many factors including the following:

- FSA is considered a last resort that is used only for survival of the spacecraft. The most important measure of survival is the availability of power to maintain communication with the observatory.

- A completely redundant control system exists that permits normal control to be used to correct for the first failure. This system is very efficient in fuel utilization thereby maximizes the scientific life of the observatory

- The duration of life in the tumbling condition is about 5 hours with no sunlight on the solar array and in the essential power only state. However, it is likely that in tumbling sunlight will periodically impinge on the array and extend this time perhaps indefinitely. Experience with other spacecraft has shown this extension to be real.

- Power availability even without periodic sunlight on the array is adequate for the ground to detect the tumbling condition and reconfigure to normal control.

- ACDS redundancy switchover is performed by ground command after ground evaluation in accordance with CEI. Automatic reacquisition of the sun is performed only to ensure survival.

ORIGINAL PAGE IS
OF POOR QUALITY

The hardware implementation is described in the Transfer Assembly spec (EQ4-110D) and has been provided in previous data package as it is common to all HEAO's. Some additional descriptive data is also presented on pg 5-37 and following. The current recommendations for LPL disabling based upon ACDS analyses are:

1) during a sun acquisition in NSA until sun point is achieved.
2) during eclipse exit in NSA
3) during RCS maneuvers in Celestial Point

17. agree

18. Certificates of Qualification packages will exist for all components. MSFC to provide the schedule for these based upon current plans.

19. Should have been deleted.

20. Actual weight of RW has been 29.5 measured. Could use ~~xxxx~~ deleted in #19 to indicate which weights in table are measured.

21. We'll get it right yet!

22. Spec values in table have not tracked revisions and some changes are still in process.

23. 29.5 lbs. is actual measured weight – 30.5 is spec value

24. 17 in-oz is not stated in CEI spec. This is an EQ spec value which was intended to establish a lower limit on the minimum torque at full command. The current RW design exceeds this requirement and the true data have been used in the design analyses.

25. Should be described as a pulse accumulation as it is not an analog signal

26. That is correct – arrow should be reversed.

27. Content of all SCN's has been considered in ACDS design when applicable. SCN summary will be updated for the CDR.

28. In general, the stated probability definition as used by ACDS is based on time. For example to not exceed 7.0 degrees pointing error with probability .997 implies that the error will exceed 7° no more than 0.3 % of the time while this requirement governs. However, in specific instances the worst case error has been used (without time averaging) in error analyses where it is conservative to do so. An example of the treatment of such an error is earth albedo.

29. Had not seen stated ECR until today's meeting, 4 October 1976. ACDS has received a copy of the ECR but cannot respond until the ECR is approved.

30. The two probability values given are consistent with an assumption of a Rayleigh Distribution. TRW will supply references.

31. Explanation of the operational constraint as given in item 12 should answer this question. However the 15° constraint of the spacecraft z axis to the sun line and the ± 1° constraint of the zx plane are not requirements on ACDS and should not be included in the ACDS requirements vs capabilities.

32. Venting impact has been considered. All applicable SCN's will be included in data presented at the CDR.

ORIGINAL PAGE IS
OF POOR QUALITY

33. [illegible] values have been used in the design analyses. The correction to include this SCN will be made at the CDR

34. MSFC is to specify the experiment allocation requirements and submit to TRW who will then prepare the appropriate SCN

35. Yes - provided refers to both items, the last phrase indicates an additional on-board function which is also implemented

36. This change is OK

37. These words are from the CEI spec and "emergency" should be defined therein if used. Considered an MSFC action to resolve

38. The allocation is equal to the capability for all subsystems since contingency is maintained at the spacecraft level. The correct number for power requirement is 201 watts, mean over worst orbit for the 2 maneuver per orbit case.

39. All applicable SCN's will be included at CDR.

40. The capability to start the SCP with an event trigger has been included in the design. The event trigger will occur on the "array safe" command which occurs some seconds before separation. Entry to NSI is timed by the SCP to occur minutes after separation, not at separation as stated.

41. Action item responses are included in PDR closeout document which is available from Bob Wolf (MSFC).

42. Mode 0 entry is shown at top of page "from all states & conditions". Impossible paths are as shown by their specific omission. Dashed lines imply that both modes can occur simultaneously.

43. Telemetry in off mode is shown on page 8-21 from each DHA. FSA is powered at all times and is entered independently of off mode. Mode 0 (off) has no substate.

44. 64 sec interval was based upon analysis done early to establish sizing requirements for software. Current estimates of pointing stability show considerable margin with current gyro performance so would not expect a change to be required unless a individual change to gyro performance is identified.

45. All procedures which are A & B common should be the same. This should be reflected in latest issue of MP-045. The latest issue is very recent and may not be in MSFC hands yet.

46. These commands are identified in the OCC procedures but should probably also be identified in Table 5-2. Will work this out at CDR presentation.

47. As in #45 appears that latest issue of MP-045 should be consulted as it reflects this correction.

48. Comment as amended is a better phrasing of condition.

49. Figure was not intended to be a comprehensive signal diagram but only to show cross-strapping topology.

ORIGINAL PAGE IS
OF POOR QUALITY

50. Current estimate of gyro drift uncertainty initially on-orbit is 0.6 deg/hr (3σ). Star mtr command is ground modifiable and therefore can be increased in real time if necessary. These characteristics allow star identification as in HEAO-A and should not necessitate a change to the ground operations.

51. Requirements document is referenced as HERO-75-460-217 in descriptions but is not in data package as it was included in a previous one. Might be beneficial to replicate summary figure. No constraint exists on attitude initial conditions of sun acquisition.

52. Data reflect evolution of design. Both sets have been superseded by material delivered as data addendum. Maximum rate gain during maneuvers is ≈500 - not 15.

53. The two 60 arcsec uncertainty values for star tracker to reference cube alignment have been reduced to a total of 10 arcsec (3σ) by pending agreement with MSFC. This reduction allows compliance with requirements under all quiet star separations. It is anticipated that the updated data on pointing will be presented at the CDR. The 60 arcsec data was that provided at the time of data package preparation and only recently modified.

54. Several memos on subject delivered at meeting including:
1) one on results of slosh and bending interaction on pointing performance
2) one on updated celestial point linear stability analysis
3) Test results and model documents on RWCA & RWA which show additional testing
4) celestial point linear stability and performance updates

additional work in progress on assessing slosh parameters (damping and frequency) by TRW Dynamics. These results will be made available to MSFC.

55. Comments similar to those for question 51 apply but this is applicable to the FSA mode requirements.

56. Selection of detailed test cases for subsystem test has been planned to occur after the CDR. Data will be provided.

57. Current momentum threshold is 10 ft-lb-sec. Comment was that this is below the wheel momentum envelope and thus could be increased to allow maneuver from nonzero wheel initial state. Considerations of FSA recovery also enter into establishing this value. The rationale for the current value will be reviewed by TRW and the findings will be coordinated with MSFC.

58. At date package publication the ASEC provided value was very large and has been only recently reduced to the level indicated. This lower value should be OK. Concern still exists for the effects of the starting & stopping torque pulses on transient response from the wheel control loops. Since this is about the X axis no severe constraint on pointing exists.

59. Should have used later date.

60. MSFC is to work allocation of magnetic moment to experiments and supply to TRW. It is anticipated that these will be such that the current 150K gauss-cu³ requirement can be relaxed to 20-50K. This would again make the magnetic disturbances of second order. No plans for a magnetic model reassessment exist currently.

61. TRW has done no work on the nonlinear effects of the isolator stiffness and no plans are know to pursue this. Effects of thermal deformation and creep due to isolators have been assessed and are being included in the ACDS maneuver accuracy analyses.

62. Recognize the concern but neither TRW nor MSFC have a practical way to resolve this at this time.

63. Withdrawn by Kennel

64. TRW (Todosiew) to resolve 30 vs 40 msec minimum pulse-width for RCS as it appears as a discrepancy between the RCS and ACDS interfaces.

ORIGINAL PAGE IS
OF POOR QUALITY

REVIEW ITEM DISCREPANCY (RID)

NO	DATE: October 12, 1976	PAGE OF
ORIGINATOR H. F. Kennel	SCHEDULED COMPL:	RID NO. 1A
ASSIGNED TO:	NASA CHAIRMAN:	END ITEM NO.
SUBMITTED BY:		REVIEW:

SUBJECT:

Clarifying notes after memo titles in documentation lists.

DESCRIPTION: Some memos included in the HEAO-B CDR appendices contain outdated or multi-choice information (i.e., HEAO-76-460-178 of App. E). A note should be attached in the documentation list after the memo titles, indicating what information is obsolete (for the example: NOTE. A linear stability analysis with the new current drive RWEA is forthcoming). Another example; App. C after HEAO-76-460-043 add: NOTE. Algorithm II is implemented.

REFERENCE: HEAO-B ACDS CDR documentation appendices

CLOSEOUT

ACTION TAKEN:

ACTION BY (ACTIONEE):	APPROVAL (SUPERVISOR):	ORGINATOR:	NASA PROJECT CLOSURE:
DATE:	DATE:	DATE:	DATE:

REVIEW ITEM DISCREPANCY (RID)

TRACKING NO.	DATE: 10-13-76	PAGE 1 OF 2
ORGINATOR: H. Hight #2	SCHEDULED COMPL:	RID NO. 2
ASSIGNED TO:	NASA CHAIRMAN:	END ITEM NO.
ACCEPTED BY:		REVIEW:

SUBJECT:

Automatic Initiation of Normal Sun Acquisition

DESCRIPTION:

A change was directed by MSFC (MOD 121, CCBD AC2-01-0528) for TRW to implement the following in the HEAO-A CEI Spec: "The prime mode for initiating normal sun acquisition over ascension is automatic (computer initiated) with manual backup (ground command)." The implementation involves an "array safe" command signal to the DPA which in turn issues an event trigger to the SCP. The SCP times the entry into the NSA minutes after separation.

Problems: (a) This change has not been implemented in the CEI Spec for HEAO-B but is implemented in the flight software. The flight software design and requirements and the CEI Spec. should be compatible. An SCN should be issued by TRW on the HEAO-B CEI Spec.

(b) This change has not been implemented on HEAO-A or -B due to SCP reliability concerns. The SCP, according to TRW, "may be a single point failure if inadvertently started early in the launch sequence." Since the SCP was already to be used as backup to ground commands before this change was directed, then the SCP may be a single point failure source already. TRW should investigate this potential problem.

REFERENCE:

HEAO-B ACDS CDR (26000-460-042, dated 10-9-76, page 2-7, para. 2.2).

CLOSEOUT

ACTION TAKEN:

ACTION BY (ACTIONEE):	APPROVAL (SUPERVISOR):	ORGINATOR:	NASA PROJECT CLOSURE:
TE:	DATE:	DATE:	DATE:

Form 187 (January 1976)

ORIGINAL PAGE IS OF POOR QUALITY

Description (Continued):

Criteria for Closeout

a. Action by TRW to provide SCR for change flight program.

b. Action by TRW to resolve single point failure concern of SCN in either present or proposed change to initiation of NSA.

c. Update ACDS CDR documentation as appropriate.

RECORD OF COMMENTS ON PUBLICATIONS

DATE: 10-13-76

SUBJECT: D01137 - Flight Program Requirements Document - HEAO-B

REVISION NOTES FROM:

ITEM NO.	PAGE	PARAGRAPH	LINE *	COMMENT (Exact wording of recommended change must be given)
1	2-1	2.1	6	72M10067 is not latest issue, which is Revision A, dated 11-15-74, plus SCN's 1A and 2 thru 15.
2	2-1	2.2	6	Reference 1, ACDS (Subsystem) Specification, is not latest issue which is Revision A, dated January 6, 1976.
3	2-1	2.2	8	Reference 2 should be EQ-1089E, dated 9-12-75 to be latest issue.
4	2-1	2.2	10	Reference 3 should be EQ-1100A dated 7-18-75.
5	2-1 thru 2-2	2.1-2.2		All other referenced documents should be checked for latest issue data and incorporation of latest requirements into D01137. (Concern: In Items 1 thru 5 above, have the latest requirements been incorporated into the D01137 requirements document? Why were the outdated issues referenced?)
6	3-16	3.1.2.2.7		Bit 13 of the Input Discrete Format is defined as "SPARE." This disagrees with EQ4-1100A, page 7, Table I-1, which defines this bit as "Propulsion Enable" in column #110X (Input 13). One of the definitions needs to be corrected.
7	3-25	Table 3.1-1		Specifically define each bit of subcom words 21 thru 25.
8	3-26	3.1.2.2.13		Three bits are decoded to determine the control mode, according to this paragraph. This disagrees with EQ4-1100A, page 24, 6th column of Table O-1, which shows bit 0 = Mode 0, bit 1 = Mode 1, and bit 2 = Mode 2. One document should be corrected.
9	3-82	3.2.22.2		What calculations are done in double precision in the DPA? Where defined or listed?

* Reference to line number within the paragraph or subparagraph.

MSFC - Form 1808 (August 1963)

RECORD OF COMMENTS ON PUBLICATIONS

DATE: 10-13-76

SUBJECT: EQ4-1100A, Equipment Spec, Transfer Assembly

REVISION NOTES FROM:

ITEM NO.	PAGE	PARAGRAPH	LINE *	COMMENT (Exact wording of recommended change must be given)
1	7	Table J-1		Column #110X, Input 13 needs to be defined as "SPARE" to agree with D01137, page 3-16, bit format definition. (See D01137, comment 6.)
2	24	Table O-1		"Discrete Outputs" column in Table O-1 defines four bits of interest. The remaining bits are "don't care" bits. However, Table O-3 shows a five bit code required for the various discrete outputs. Table O-1 should be corrected to show five bits.
3	24	Table O-1		"Mode Bilevel Buffer" column in Table O-1 uses bits 0, 1, and 2 defined as Mode 0, 1, and 2, respectively. They should each be defined only as "Mode Bit" since the three bits are decoded to determine the mode, as shown in D01137, page 3-26, para. 3.1.2.2.13 (see D01137, comment 8).
4	23	3.2.1.2.6	3	Bilevel data bits are not defined in Tables O-2 or O-3. Table O-2 defines Output Address Bits and Table O-3 defines Discrete Output Data Bits. The Mode Bilevel Data Bits are not defined in EQ4-1100A as stated in this paragraph. Add a new table.
5	10	Table I-3		Ground Reference (Channel 15) is not described. What is function of this command?

* Reference to line number within the paragraph or subparagraph.

MSFC - Form 1906 (August 1963)

REVIEW ITEM DISCREPANCY (RID)

NO	DATE: October 13, 1976	PAGE OF
ORIGINATOR: S. M. Seltzer	SCHEDULED COMPL:	RID NO. 3
[illegible]:	NASA CHAIRMAN:	END ITEM NO.
[illegible]:		REVIEW:

SUBJECT: Update ACDS Subsystem Spec

DESCRIPTION:

Update the ACDS Subsystem Spec in accordance with the enclosed comments.

[illegible]:

CLOSEOUT

ACTION TAKEN:

[illegible] (ACTIONEE):	APPROVAL (SUPERVISOR):	ORIGINATOR:	NASA PROJECT CLOSURE:
	DATE:	DATE:	DATE:

ORIGINAL PAGE IS OF POOR QUALITY

RECORD OF COMMENTS ON PUBLICATIONS

DATE: September 15, 1976

SUBJECT: Subsystem Specification - ACDS HEAO-B (SS7-29A)

REVISION NOTES FROM: S. M. Seltzer, HEAO-B ACDS Review Team

ITEM NO.	PAGE	PARAGRAPH	LINE *	COMMENT (Exact wording of recommended change must be given)
1				Need to add a preface (in some form). In it there is a need to clearly define the probabilities used in the spec, including over what time duration the probabilities stated are applicable. These definitions must be used uniformly throughout the specifications. The manner in which TRW will verify these probabilities must be defined. These probability definitions must be used uniformly throughout the other applicable HEAO specs.
2	3	2		Change last item from TBS to D01137.
3	3	2		Add new item: D01138 - ACDS HEAO-B Preflight Interface Program Requirements Document. Also add documents referenced in Item 22 (below).
4	4	3.1		Change quantities of DPA's from one to two.
5	4	3.1		Change last item from TBS to D01137.
6	4	3.1		Add new item: same as Item 3 above.
7	5	Fig. 3.1		Add (2) under block title: Transfer Assembly.
8	5	Fig. 3.1		Add (2) under block title: Digital Processor Assembly.
9	7	3.1.9	2	Change to "....data processing, mode control, ..."
10	8	3.1.10	1-2	Change "refer to" to "referred to as"
11	10	3.2.2	4	Change sentence to read "condition by ground command either from the OCC in real time or from the SCP."
12	10	3.2.2	4	Follow above sentence (Item 11) with "The term ground command implies either immediate response or command that was stored and used later.
13	11	3.2.2.1	1	Change first sentence to read: "....enter the Normal Sun Acquisition mode only upon command, with initial entry based upon launch vehicle separation."
14	11	3.2.2.1	5	Change "sun point mode" to "Normal Sun Acquisition mode."
15	11	3.2.2.1	7	Add: "When sunlight is not present, the ACDS shall cause the spacecraft to hold the attitude existing upon entry into the eclipse condition."
16	12	3.3.1.1	4	Check correctness of "probability .99"; shouldn't it read "probability .997"?

* Reference to line number within the paragraph or subparagraph.

MSFC - Form 1968 (August 1968)

Encl 2

RECORD OF COMMENTS ON PUBLICATIONS

DATE: September 15, 1976

SUBJECT: Subsystem Specification - ACDS HEAO-B (SS7-29A)

REVISION NOTES FROM: S. M. Seltzer, HEAO-B ACDS Review Team

ITEM NO.	PAGE	PARAGRAPH	LINE *	COMMENT (Exact wording of recommended change must be given)
17	12	3.3.1.1	7	"(3σ)" is incompatible with stated probabilities.
18	12	3.3.2.1	4	TBD needs to be defined for the minimum time in minutes that sunlight must be present for observatory to sun point successfully in Normal Sun Acquisition Mode.
19	12	3.3.2.1	7	Change last line to read: "be maintained compatible with the star tracker spec."
20	13	3.3.2.2	22	Insert sentence before last sentence. The attitude about the x-axis shall be maintained within 1° (0.68 probability).
21	13	3.3.2.2	2	Add: "...from any initial attitude and body rate compatible with those specified in the CEI spec so long as..."
22	13	3.3.2.2	3	Add to end of para: "This time accounts for worst case body rates as set forth in TRW Memoranda HEAO-75-460-217 and HEAO-75-460-531."
23	13	3.3.2.2	6	Add to end of para: "When sunlight is not present, attitude control is inactive in the First Sun Acquisition Mode."
24	15	3.5.1.2	4-6	Delete last sentence of para.
25	15	3.5.1.2	8	Change verbage to read: "...consist of an adequate number of modes..."
26	15a	Table 3.1		Where is referenced Fig. 1-3? If it exists, where then are Fig. 1-1 and 1-2?
27	15a	Table 3.1		What is the usefulness of last three columns (apparently concerned with complimentary strips).
28	17	3.5.1.6.5	4	Change "thrust vector" to "spin axis."
29	17	3.5.2.2		Three TBD's need to be defined for number of telemetry words: analog, discrete bilevel, and digital.
30	18	3.5.3.1	3	Change to: "...pulse commands of no less than 0.040 second...."
31	18	3.5.4.1		If no experiments contain fluid, delete section 3.5.4.1; if any experiment contains fluid, change "None" to "No significant dynamic effect."
32	18	3.5.4.2		Change title to "Disturbance Torques"

* Reference to line number within the paragraph or subparagraph.

MSFC - Form 1998 (August 1968)

ORIGINAL PAGE IS
OF POOR QUALITY

RECORD OF COMMENTS ON PUBLICATIONS

DATE: September 15, 1976

SUBJECT: Subsystem Specification - ACDS HEAO-B (SS7-29A)

RECOMMENDED FROM: S. M. Seltzer, HEAO-B ACDS Review Team

ITEM NO.	PAGE	PARAGRAPH	LINE *	COMMENT (Exact wording of recommended change must be given)
33	18	3.5.4.2.1		Add section 3.5.4.2.1 entitled "Venting Disturbance Torques." Use verbage of former 3.5.4.2.
34	18	3.5.4.2.2		Add section 3.5.4.2.2 entitled "Experiment-Induced Disturbance Torques" and add verbage to cover disturbance torques due to FPTA and other experiment equipment motions during orbital operations.
35		3.5.4.4	1	Change "store" to "stored."
36		3.5.4.4	2-3	Change to "...capability to store and maneuver to 14 pre-selected targets."
37		3.5.4.4	4	Change to "...orbit, with storage of at least 7 orbits in advance..."
38	22	Table 4.1	22-27	Put table number on each page of the table.
39	24	Table 4.1: 3.3.2.2	6	Change "jitter 1 $\widehat{sec}$ in 1 sec" to: "Jitter about y, z-axis: 1 $\widehat{sec}$ in 1 sec about x-axis: 20 $\widehat{sec}$ in 1 sec
40	28	6.1.1	4	Change "Coarse sun sensing" to "± y-sun sensor assembly."
41	28	6.1.1.1	1	Change "fine sensing portion" to "narrow angle portion."
42	28	6.1.1.1	3	Change ± 3° to ± 30°.
43	28	6.1.1.1	4	Change "Coarse sensing portion" to "± y-sun sensor assembly."
44	28	6.1.1.2	1	Change entire line to read: "The output of the narrow angle sensing elements and the wide angle sensing elements,..."
45	28	6.1.1.3	1-2	Same as Item 41.
46	28	6.1.1.3	3	Same as Item 43.
47	28	6.1.1.3	5	Change Coarse sensing function" to "± y-sun sensor assembly function."
48	28	6.1.1.3	7	Change "ten degrees" to "3.2°."
49	29	6.1.1.4		6.1.1.4 Paragraph does not state which sensor, wide angle or narrow is being addressed. Values do not agree with equipment spec, suggest rewrite as follows: *

* Reference to line number within the paragraph or subparagraph.

MSFC - Form 1863 (August 1968)

RECORD OF COMMENTS ON PUBLICATIONS

DATE: September 15, 1976

SUBJECT: Subsystem Specification - ACDS HEAO-B (SS7-29A)

REVIEWER NOTES FROM: S. M. Seltzer, HEAO-B ACDS Review Team

ITEM NO.	PAGE	PARAGRAPH	LINE *	COMMENT (Exact wording of recommended change must be given)
				*6.1.1.4 Accuracy The detector functions shall exhibit the accuracies specified over the fields of view specified. *6.1.1.4.1 Wide Angle Detector The null accuracy of the wide angle pitch detector and wide angle roll detector shall be within ± 3.2° with respect to the subassembly optical axis. *6.1.1.4.2 Narrow Angle Detector Given the cross angle β (or α), the angle α (or β) shall be determinable from the calibrated output characteristic within the following accuracy: the 3σ error in the indicated output shall be ± 0.6° ± 10% of the true input angle within ± 20° of null and shall be less than ± 13% of the true input angle over the remaining field of ± 30° each axis. The true input angle is defined with respect to the subassembly axes in the ZSSA equipment specification.
50	33	6.1.6	5	Make 20 in-oz of this spec and 17 in-oz of the hardware spec consistent.
51	34-40	6.2		Boil this entire academically fascinating tutorial treatment down to just the requirements.
52	41-47	6.3		Same as Item 51 above.
53	49	6.4.1		Why separate columns for x, y and z? They appear identical (except for one omission).
54	49	6.4.1		Take another look at the entire table. Fill in the blanks or tell why they are left blank. Update it.
48-50		6.4		Prepare a similar error budget for each of the modes as defined in para. 3.3 (as modified by this document), not just the attitude determination mode. The error budget should be separated into two classes: (1) subsystem performance specs, and (2) equipment ("block box") equipment specs. This section should constitute a summary that consists of a single place to look for any error source within the ACDS.

* Reference to line number within the paragraph or subparagraph.

MSFC - Form 1888 (August 1969)

ORIGINAL PAGE IS
OF POOR QUALITY

REVIEW ITEM DISCREPANCY (RID)

NO	DATE: October 12, 1976	PAGE OF
ORIGINATOR: H. F. Kennel #4	SCHEDULED COMPL:	RID NO. 4
[illegible]:	NASA CHAIRMAN:	END ITEM NO.
[illegible]:		REVIEW:

SUBJECT:

Elimination of effect of temporary voltage drop on under voltage trigger

DESCRIPTION: The under voltage trigger level presently has to be set low enough to avoid false triggering on voltage drops due to high current demands (RW desaturation, etc.). This causes concern about the remaining battery life.* Methods for elimination of the effects of these relatively short-term voltage drops should be investigated. Possible solutions include: (a) Heavy filtering of battery voltage upstream of UV detector; (b) disabling of UV detection during known high current periods; (c) allowing use of UV signal only if under voltage is still detected several minutes (about 6 minutes) after the first under voltage detection.

* SEE RID #3 BY MINNER.

REFERENCE:

HEAO-B ACDS CDR documentation

CLOSEOUT

ACTION TAKEN:

[illegible] (ACTIONEE):	APPROVAL (SUPERVISOR):	ORIGINATOR:	NASA PROJECT CLOSURE:
	DATE:	DATE:	DATE:

DESIGN REVIEW ACTION ITEM

R10 5

TRACKING NO.	DATE: 10/13/76	PAGE 1 OF 1
ORIGINATOR: R. W. MILNER	SCHEDULED COMPL:	ACTION ITEM NO.
ASSIGNED TO:	NASA CHAIRMAN:	END ITEM NO.
ACCEPTED BY:		REVIEW TYPE:

SUBJECT: UNDER VOLTAGE SENSOR SETTING AND LONG PULSE LOGIC

DESCRIPTION: There is concern over the fact that if the LPL (Long Pulse Logic) circuit "triggers"; the spacecraft power bus is immediately offloaded (all non-essential electrical loads turned "off") and the observatory is placed in a drift mode awaiting correction of the anomaly from the ground or if it does not occur in a timely manner, the UV (Undervoltage Sensor) is depended upon to energize the RCS thrusters and re-acquire the sun in the "Z" axis. It is strongly felt that use of the UV sensor is not a reliable means to depend upon to "trigger" the First Sun Acquisition Mode. It is recommended that the LPL circuit also immediately trigger the First Sun Acquisition Mode rather than await the UV signal.

Assume a LPL circuit "trigger" on the first day of launch using the existing spacecraft systems. The UV sensor is to be set at the 24.5 volt level at "liftoff."

- o How much capacity (worst case) remains in the batteries when the bus voltage drops to 24.5 volts?
- o Does sufficient power remain in the batteries to re-acquire the sun from a worse case condition?
- o Are precautions being taken to preclude inadvertent "trips" of the UV sensor when the Reaction Wheels are managing momentum? (SEE R10 #4 BY KENNEL)
- o Are Mission Control Procedures similar to those for HEAO-A being prepared?
- o What spacecraft loads presently remain "on" after an LPL "Trigger"?

REFERENCE: HEAO-B ACDS CDR (26000-460-042, 19 OCT. 1976) Page 2-9, Para. 1

CLOSEOUT

ACTION TAKEN:

ACTION BY (ACTIONEE):	APPROVAL (SUPERVISOR):	ORIGINATOR:	NASA PROJECT CLOSURE:
DATE:	DATE:	DATE:	DATE:

REVIEW ITEM DISCREPANCY (RID)

NO	DATE: October 15, 1976	PAGE 1 OF 1
ORIGINATOR C. Green	SCHEDULED COMPL:	RID NO. 6
ASSIGNED TO:	NASA CHAIRMAN:	END ITEM NO.
ACCEPTED BY:		REVIEW: ACDS CDR

SUBJECT:

Propellant savings resulting from planned LPL operation

DESCRIPTION: The CDR package did not present an analysis of RCS propellant consumption for the planned LPL operation as opposed to immediately switching to the First Sun Acquisition mode. TRW should provide quantitative data comparing propellant consumption of the planned operation to immediately switching to First Sun Acquisition mode. Also show that under controlled tumbling saves propellant.

REFERENCE:

HEAO-B ACDS CDR (26000-460-042, 19 October 1976)

CLOSEOUT

ACTION TAKEN:

ACTION BY (ACTIONEE):	APPROVAL (SUPERVISOR):	ORIGINATOR:	NASA PROJECT CLOSURE:
DATE:	DATE:	DATE:	DATE:

REVIEW ITEM DISCREPANCY (RID)

NO	DATE: October 12, 1976	PAGE OF
ORIGINATOR: H. F. Kennel	SCHEDULED COMPL:	RID NO. 7
[illegible]:	NASA CHAIRMAN:	END ITEM NO. 1
[illegible] BY:		REVIEW:

SUBJECT:

Reassessment of total system momentum test level

DESCRIPTION: The referenced memo recommends a total system momentum test level of 10 ft-lb-sec. This low level would make any momentum management by judicious target sequence selection impossible. Comparing FSA momentum capability with momentum addition from RCS on a component basis (data from the referenced memo) shows a design margin of at least eight. For momentum management a test level of 25 ft-lb-sec (for 3-RW operation) and 50 ft-lb-sec (for 4-RW operation) would be adequate in conjunction with a scaleup of the total x-momentum component before the square root operation (p. 7 of ref. memo) by a ratio of Sin 30°/Sin 20°* (this scaling results in a check on a momentum disk, rather than a sphere; the disk is a much better fitting envelope). In the light of the large design margin it should be investigated whether there are any objections to the desired total system momentum test level being raised to the value adequate from the momentum management standpoint.

* Alternatively the first row of the TBW and the inertia matrices can be scaled up (if they are not used also someplace else).

REFERENCE: HEAO-B ACDS CDR documentation (p. 14-1).
Memo "Recovery from large disturbances during RW maneuvers," HEAO-76-460-092.

CLOSEOUT

ACTION TAKEN:

[illegible] (ACTIONEE):	APPROVAL (SUPERVISOR):	ORIGINATOR:	NASA PROJECT CLOSURE:
[illegible]:	DATE:	DATE:	DATE:

ORIGINAL PAGE IS OF POOR QUALITY

REVIEW ITEM DISCREPANCY (RID)

RID	DATE: October 12, 1976	PAGE 1 OF 1
PROJECTOR H. Shelton	SCHEDULED COMPL: ASAP	RID NO. 8
ASSIGNED TO:	NASA CHAIRMAN:	END ITEM NO.
ASSIGNED BY:		REVIEW:

SUBJECT: Telescope to Spacecraft Isolator Nonlinearity Effect on ACDS

DESCRIPTION: Some knowledge of the nonlinear properties of the telescope to spacecraft isolator leads to the question: Were the isolators modelled properly in the flexible body analysis used in the ACDS design and verification?
This RID requests that TRW validate the isolator model and spring rate used in the ACDS design analysis. If the model and data cannot be validated at the CDR, prepare a plan and schedule for evaluating the new isolator data.

REFERENCE: HEAO-B ACDS CDR Data Package.

CLOSEOUT

ACTION TAKEN:

ASSIGNEE (ACTIONEE):	APPROVAL (SUPERVISOR):	ORIGINATOR:	NASA PROJECT CLOSURE:
	DATE:	DATE:	DATE:

REVIEW ITEM DISCREPANCY (RID)

[illegible]:	DATE: October 14, 1976	PAGE OF
[illegible]: L. W. Jones	SCHEDULED COMPL:	RID NO. 10
[illegible]:	NASA CHAIRMAN:	END ITEM NO.
[illegible]:		REVIEW:

[illegible]: RCS Command Pulse Width

[illegible]: RCS qualification testing was conducted at 0.040 sec; not 0.030 sec. ACDS conducted simulations using 0.030 sec square wave pulses (minimum impulse bit). The 0.020 sec given is marginal: The valve will not always respond to that command pulse width. Change ACDS documentation to reflect the qual command pulse with width: 0.040 sec.

[illegible]:

[illegible] CLOSEOUT

[illegible]TION TAKEN:

[illegible] (ACTIONEE):	APPROVAL (SUPERVISOR):	ORIGINATOR:	NASA PROJECT CLOSURE:
	DATE:	DATE:	DATE:

ORIGINAL PAGE IS OF POOR QUALITY

REVIEW ITEM DISCREPANCY (RID)

TRACKING NO.	DATE: 14 October 1976	PAGE OF
ORIGINATOR: Singley	SCHEDULED COMPL:	RID NO. 11
ASSIGNED TO:	NASA CHAIRMAN:	END ITEM NO.
ACCEPTED BY:		REVIEW:

SUBJECT:
HEAO-B Ground Initial Acquisition Program. TRW Complying with Paragraph 3.2.1.2.5.8.3 of HEAO-B CEI

DESCRIPTION:
Requirement has not been shown to be complied with in this data package. The TRW algorithm developed by Dr. Farrenkopf was developed in general and in theory it will perform the desired function. However; there is no supporting evidence contained in the CDR data package that will give the project any confidence the scheme will work for HEAO-B with a reduced star tracker FOV, scan rate, and worse than expected gyro drift rate.

REFERENCE:
CDR data package Vol I, Page 3-5 Vol II Appendix G

CLOSEOUT

ACTION TAKEN:

ACTION BY (ACTIONEE):	APPROVAL (SUPERVISOR):	ORGINATOR:	NASA PROJECT CLOSURE:
DATE:	DATE:	DATE:	DATE:

[illegible] Form 4[illegible] (January 1975)

REVIEW ITEM DISCREPANCY (RID)

TRACKING NO.	DATE: 10-13-76	PAGE 1 OF 1
ORGINATOR: H. Hight	SCHEDULED COMPL:	RID NO. 12
ASSIGNED TO:	NASA CHAIRMAN:	RID ITEM NO.
ACCEPTED BY:		REVIEW:

SUBJECT:

Battery Depth of Discharge Versus Under Voltage Trigger

DESCRIPTION:

Problem: MSFC and TRW apparently do not agree upon the state of discharge of the battery when the UV (under-voltage) signal is generated to switch off non-essential power and cause the S/C to be uncontrolled. MSFC used 90 percent discharge and TRW 10 percent discharge in recent discussions. This factor is critical in determining adequacy of the ACDS design and operations concepts especially use of FSA mode.

TRW and MSFC need to reach an agreement on state of battery discharge at UV trigger point. ACDS CDR documentation needs to be updated as required.

REFERENCE:

CLOSEOUT

ACTION TAKEN:

ACTION BY (ACTIONEE):	APPROVAL (SUPERVISOR):	ORGINATOR:	NASA PROJECT CLOSURE:
TE:	DATE:	DATE:	DATE:

34

82

REVIEW ITEM DISCREPANCY (RID)

NO	DATE: October 15, 1976	PAGE OF
ORGINATOR H. F. Kennel	SCHEDULED COMPL:	RID NO. 13
ASSIGNED TO:	NASA CHAIRMAN:	END ITEM NO.
ACCEPTED BY:		REVIEW:

SUBJECT:
Change of magnetic moment specification

DESCRIPTION: The value of the allowed magnetic moment was incorrect. Provide the correct values and include in the CEI specs.

REFERENCE:
HEAO CEI Specifications 72M10067

CLOSEOUT

ACTION TAKEN:

ACTION BY (ACTIONEE):	APPROVAL (SUPERVISOR):	ORGINATOR:	NASA PROJECT CLOSURE:
DATE	DATE:	DATE:	DATE:

REVIEW ITEM DISCREPANCY (RID)

NO.	DATE: October 14, 1976	PAGE 1 OF 1
ORIGINATOR R. Rowe	SCHEDULED COMPL:	RID NO. 14
ASSIGNED TO:	NASA CHAIRMAN:	END ITEM NO.
SUBMITTED BY:		REVIEW:

SUBJECT: Incompatibility Between ACDS CDR Data Package and TRW Document MP-04S (Mission Control Procedures)

DESCRIPTION: The procedures in the ACDS CDR Data Package should be compatible with the procedures specified in TRW Document MP-04S, Mission Control Procedures. The specific items are as follows: (1) Specific commands for launch configuration, and (2) the procedure for transfer to NSA.

REFERENCE: Items #45 and 47

CLOSEOUT

ACTION TAKEN:

ACTION BY (ACTIONEE):	APPROVAL (SUPERVISOR):	ORGINATOR:	NASA PROJECT CLOSURE:
DATE	DATE:	DATE:	DATE:

ORIGINAL PAGE IS OF POOR QUALITY

REVIEW ITEM DISCREPANCY (RID)

NO.	DATE: October 15, 1976	PAGE OF
ORIGINATOR H. L. Shelton	SCHEDULED COMPL:	RID NO. 15
ASSIGNED TO:	NASA CHAIRMAN:	END ITEM NO.
ACCEPTED BY:		REVIEW:

SUBJECT: HEAO-B ACDS Subsystem Test Plan

DESCRIPTION: The ACDS Subsystem Test details as provided in the CDR data package pertains only to HEAO-A.

This RID requests the HEAO-B ACDS Subsystem Test details be provided in sufficient detail to show input data, initial conditions, orbital conditions, and etc. The individual tests and criteria for assessing results must be provided along with the schedule for accomplishment.

REFERENCE: HEAO-B ACDS CDR Data Package (Main Vol., Page 13-7) (Item 56)

CLOSEOUT

ACTION TAKEN:

ACTION BY (ACTIONEE):	APPROVAL (SUPERVISOR):	ORGINATOR:	NASA PROJECT CLOSURE:
DATE	DATE:	DATE:	DATE:

REVIEW ITEM DISCREPANCY (RID)

NO	DATE: October 15, 1976	PAGE 1 OF 1
ORIGINATOR H. F. Kennel	SCHEDULED COMPL:	RID NO. 16
ASSIGNED TO:	NASA CHAIRMAN:	END ITEM NO.
ACCEPTED BY:		REVIEW:

SUBJECT:
Determine FPTA max. angular momentum

DESCRIPTION: Need agreement between AS&E and MSFC/TRW on the maximum angular momentum that is generated during the operation of the FPTA.

REFERENCE:
Item No. 58

CLOSEOUT

ACTION TAKEN:

ACTION BY (ACTIONEE):	APPROVAL (SUPERVISOR):	ORGINATOR:	NASA PROJECT CLOSURE:
DATE	DATE:	DATE:	DATE:

ORIGINAL PAGE IS OF POOR QUALITY

REVIEW ITEM DISCREPANCY (RID)

NO	DATE: October 15, 1976	PAGE OF
ORIGINATOR H. F. Kennel	SCHEDULED COMPL:	RID NO. 17
ASSIGNED TO:	NASA CHAIRMAN:	END ITEM NO.
ADDRESSED BY:		REVIEW:

SUBJECT:
Magnetic Field Modeling

DESCRIPTION: Show that the tilted dipole magnetic field model is still adequate (in the light of the higher than expected HEAO-B magnetic moments) and higher order field models are not necessary.

REFERENCE: Memo HEAO-74-460-084

CLOSEOUT

ACTION TAKEN:

ACTION BY (ACTIONEE):	APPROVAL (SUPERVISOR):	ORGINATOR:	NASA PROJECT CLOSURE:
DATE	DATE:	DATE:	DATE:

REVIEW ITEM DISCREPANCY (RID)

NO	DATE: October 15, 1976	PAGE OF
ORIGINATOR H. F. Kennel	SCHEDULED COMPL:	RID NO. 18
ASSIGNED TO:	NASA CHAIRMAN:	END ITEM NO.
ACCEPTED BY:		REVIEW:

SUBJECT:
Flight Software Discrepancies

DESCRIPTION: Documentation discrepancies are as follows:

1. Page 10-25, paragraph 1, line 3: Add following sentence after end of paragraph: Note that the first column of the body to wheel transforms are scaled by the x to y, z position gain ratio of 270/1700 (Kg in Figure 10.4-2, p. 10-14).

2. Page 10-26, last line, There is a minus sign missing in the wheel to body transform, last line, last entry (TWB12) should be -.664463.

REFERENCE:
D01137

CLOSEOUT

ACTION TAKEN:

ACTION BY (ACTIONEE):	APPROVAL (SUPERVISOR):	ORGINATOR:	NASA PROJECT CLOSURE:
DATE	DATE:	DATE:	DATE:

ORIGINAL PAGE IS OF POOR QUALITY

REVIEW ITEM DISCREPANCY (RID)

NO.	DATE: October 15, 1976	PAGE 1 OF
ORIGINATOR Hight/Rowe/Kennel	SCHEDULED COMPL:	RID NO. 19
ASSIGNED TO:	NASA CHAIRMAN:	END ITEM NO.
ACCEPTED BY:		REVIEW:

SUBJECT:
Flight Software Discrepancies

DESCRIPTION: Several comments are attached and require resolution. The comments pertain to D01137, D01138, and EQ4-1100A, on flight program requirements and design and the TA specification.

REFERENCE:

CLOSEOUT

ACTION TAKEN:

ACTION BY (ACTIONEE):	APPROVAL (SUPERVISOR):	ORIGINATOR:	NASA PROJECT CLOSURE:
DATE:	DATE:	DATE:	DATE:

R.J. ROWE
EF15

RECORD OF COMMENTS ON PUBLICATIONS	DATE: Oct. 14, 1976

TITLE: FLIGHT PROGRAM DESIGN DOCUMENT FOR HEAO-B (D01138)

REVISION NOTES FROM:

ITEM NO.	PAGE	PARAGRAPH	LINE *	COMMENT (Exact wording of recommended change must be given)
1	3-42	3.2.6.2		Change CDPYMT description to "pointer to CDDYMT" add "CDDYMT - star tracker measurement data table."
2	3-60	3.2.12.12	6	Sentence "at AEE230 .... is incomprehensible.
3	3-83	3.2.18.12	10	Should read "If CDFTEF=1, then TF1 ....
			11	Should read "If CDFTEF=0, then TF2,.....

* Reference to line number within the paragraph or subparagraph.

MSFC - Form 1908 (August 1968)

R. Rowe
EF15
10-14-76

DPA SOFTWARE CRITICAL DESIGN AUDIT

COMMENTS ON APPENDIX OF FPDD (D01138)

1. 10.1.3 Initialization

FPH-A had a block to "output reset GRR CH. 13." Why is this block not present in FPH-B?

2. 10.1.4 Program Control-Initialization

In FPH-A the following flags were initialized to 0: CDFACL, PCFMFC, CDFNDRO, PCFET3I. Why were these not initialized in FPH-B?

3. 10.1.4 Program Control - Execution (PG. 1)

FPH-A detailed flow says "SET CDF MSE in CDVSSW while FPH-B detailed flow says "SET CDFMSE in (CDDFLAG). Which is correct?

4. 10.1.4 Program Control - Execution (PG. 2)

Decision block on CDFUPR not present. Why?

5. 10.1.4 Program Control - Execution Segment Dispatcher

Logic at PCED10 is changed from A. Why?

6. 10.1.7 Sun Sensor Input

SII - Initialization

- o Does "R3 ← (SIP) = INDEX" need to be here since it is done in the 3rd block of the main routine?
- o Why is CDFSPC not initialized to 0? (as it was for FPH-A)

7. 10.1.10 RWA Input

At WIE010, where reading RWA data, as flowed, won't CSSINP be called 5 times versus 4 times?

8. 10.1.12 Attitude Error Determination (sheet 3 of 4)

Decision for $|WX| \geq WXM$, etc. does not agree with flow in FPRD. (Shouldn't it read R10, R11 < R12, R13?)

9. 10.1.12 Attidue Error Determination (Sheet 2 of 4)

The routine jumps to AEE140 after executing AE1 at AEE120. This jump does not agree with flow (3-51) in FPRD.

10. 10.1.13 RWA Rate Gain Comp (Sheet 2 of 3)

ECR 488 says $E5 < 0$ (pg 3-54, FPRD) while detailed flows say $E5 \leq 0$.

C 2

11. 10.1.14 RWA Command Computation (Sheet 4 of 6)

Between WCE190 - WCE200, the decision for /ERW(N)/> IIMX does not agree with FPRD.

12. 10.1.14 RWA Command Computation (Sheet 4 of 6)

At WCE280, detailed flow does not agree with FPRD. FPRD has ERW(N)=ERMX* SGN(ERW(N)). Detailed flow has ERW(N)=ERMX

13. 10.1.18 Telemetry Formatting

TEE - the commend on the first decision block (CDFTEF=0) should read "Engineering Mode requested?"

TFE - 2nd decision block variable should be CDFTEF vs. CPFTEF

14. 10.1.21 Command Processing - Initialization

Shouldn't the flag CPFED be initialized to 1?

15. 10.1.16 RCS Command Computation (Sheet 1 of 5)

At CCEB050, PWF=-PWF (FPRD) is not shown.

RECORD OF COMMENTS ON PUBLICATIONS

DATE: 10-13-76

SUBJECT: D01137 - Flight Program Requirements Document - HEAO-B

REVISION NOTES FROM: Flight

ITEM NO.	PAGE	PARAGRAPH	LINE *	COMMENT (Exact wording of recommended change must be given)
1	2-1	2.1	6	72M10067 is not latest issue, which is Revision A, dated 11-15-74, plus SCN's 1A and 2 thru 15.
2	2-1	2.2	6	Reference 1, ACDS (Subsystem) Specification, is not latest issue which is Revision A, dated January 6, 1976.
3	2-1	2.2	8	Reference 2 should be EQ-1089E, dated 9-12-75 to be latest issue.
4	2-1	2.2	10	Reference 3 should be EQ-1100A dated 7-18-75.
5	2-1 thru 2-2	2.1-2.2		All other referenced documents should be checked for latest issue data and incorporation of latest requirements into D01137. (Concern: In items 1 thru 5 above, have the latest requirements been incorporated into the D01137 requirements document? Why were the outdated issues referenced?)
6	3-16	3.1.2.2.7		Bit 13 of the Input Discrete Format is defined as "SPARE." This disagrees with EQ4-1100A, page 7, Table I-1, which defines this bit as "Propulsion Enable" in column #110X (Input 13). One of the definitions needs to be corrected.
7	3-25	Table 3.1-1		Specifically define each bit of subcom words 21 thru 25.
8	3-26	3.1.2.2.13		Three bits are decoded to determine the control mode, according to this paragraph. This disagrees with EQ4-1100A, page 24, 6th column of Table 0-1, which shows bit 0 = Mode 0, bit 1 = Mode 1, and bit 2 = Mode 2. One document should be corrected.
9	3-82	3.2.22.2		What calculations are done in double precision in the DPA? Where defined or listed?

* Reference to line number within the paragraph or subparagraph.

MSFC - Form 1906 (August 1963)

ORIGINAL PAGE IS OF POOR QUALITY

RECORD OF COMMENTS ON PUBLICATIONS	DATE: 10-13-76

SUBJECT: EQ4-1100A, Equipment Spec, Transfer Assembly

REVISION NOTES FROM: Flight

ITEM NO.	PAGE	PARAGRAPH	LINE *	COMMENT (Exact wording of recommended change must be given)
1	7	Table J-1		Column #110X, Input 13 needs to be defined as "SPARE" to agree with D01137, page 3-16, bit format definition. (See D01137, comment 6.)
2	24	Table O-1		"Discrete Outputs" column in Table O-1 defines four bits of interest. The remaining bits are "don't care" bits. However, Table O-3 shows a five bit code required for the various discrete outputs. Table O-1 should be corrected to show five bits.
3	24	Table O-1		"Mode Bilevel Buffer" column in Table O-1 uses bits 0, 1, and 2 defined as Mode 0, 1, and 2, respectively. They should each be defined only as "Mode Bit" since the three bits are decoded to determine the mode, as shown in D01137, page 3-26, para. 3.1.2.2.13 (see D01137, comment 8).
4	23	3.2.1.2.6	3	Bilevel data bits are not defined in Tables O-2 or O-3. Table O-2 defines Output Address Bits and Table O-3 defines Discrete Output Data Bits. The Mode Bilevel Data Bits are not defined in EQ4-1100A as stated in this paragraph. Add a new table.
5	10	Table I-3		Ground Reference (Channel 15) is not described. What is function of this command?

* Reference to line number within the paragraph or subparagraph.

MSFC - Form 1904 (August 1968)

ORIGINAL PAGE IS OF POOR QUALITY

RECORD OF COMMENTS ON PUBLICATIONS	DATE: October 4, 1976

SUBJECT: HEAO-B Flight Program Requirements Document, D01137, 21 June 1976.

REVISION NOTES FROM: S. M. Seltzer, HEAO-B ACDS Review Team, MSFC

ITEM NO.	PAGE	PARAGRAPH	LINE *	COMMENT (Exact wording of recommended change must be given)
1	10-25	1	3	Add following sentence after end of paragraph: "Note that the first column of the body to wheel transforms are scaled by the x to y, z position gain ratio of 270/1700 (Kg in Figure 10.4-2, p. 10-14)."
2	10-26		last	There is a minus sign missing in the wheel to body transform, last line, last entry (TWB12) should be -.664463.

* Reference to line number within the paragraph or subparagraph.

MSFC - Form 1888 (August 1968)

Encl 2

REVIEW ITEM DISCREPANCY (RID)

TRACKING NO.	DATE: 19 October 1976	PAGE 1 OF 1
ORGINATOR: SELTZER	SCHEDULED COMPL:	RID NO. 20
ASSIGNED TO:	NASA CHAIRMAN:	END ITEM NO.
ACCEPTED BY:		REVIEW:

SUBJECT:

Ensuring that components meet the specifications

DESCRIPTION:

The MSFC design laboratories must receive the hardware component data packages that go with the COQ's in sufficient time (three weeks ahead of the COQ "need dates") so that MSFC can review them prior to the date the COQ's must be signed.

REFERENCE:

CLOSEOUT

ACTION TAKEN:

ACTION BY (ACTIONEE):	APPROVAL (SUPERVISOR):	ORGINATOR:	NASA PROJECT CLOSURE:
DATE:	DATE:	DATE:	DATE:

MSFC - Form 483 (January 1975)

ORIGINAL PAGE IS OF POOR QUALITY

APPENDIX B

MEMO ED12-76-58, SELTZER TO WOJTALIK, DATED JULY 26, 1976, SUBJECT: "FORMATION OF HEAO-B ACDS REVIEW TEAM"

PRECEDING PAGE BLANK NOT FILMED

National Aeronautics and
Space Administration

George C. Marshall Space Flight Center
Marshall Space Flight Center, Alabama
35812

NASA

Reply to Attn of: ED12-76-58

July 26, 1976

TO: EE71/F. S. Wojtalik

FROM: ED12/S. M. Seltzer, Systems Dynamics Laboratory

SUBJECT: Formation of HEAO-B ACDS Review Team

Because time before the HEAO-B ACDS CDR is short, I have taken the liberty of convening the first meeting of the HEAO-B ACDS Review Team. I have acted on oral direction which I assume will be augmented by written direction.

At the first meeting (July 23, 1976) I presented the material I have enclosed hereto. I need to verify with you my assumed team mission et al. There were a few changes in the composition of the review team. I assume you will ask the Laboratory Directors to name the team members they desire.

I have asked Dale Hoffman to make a presentation to the review team on Tuesday, July 27. He plans to give us a technical description of the HEAO-B ACDS, define the pertinent available documentation, and tell us that pertinent documentation that is forthcoming (and when).

Sherman M. Seltzer
Chairman, HEAO ACDS Review Team

Enclosure
As Stated

Enc 2

ORIGINAL PAGE IS
OF POOR QUALITY

cc:
EC01/Mr. Moore
ED01/Dr. Lovingood
ED01/Dr. Worley
EL01/Dr. Thomason
EP01/Mr. McCool
ACDS Team Members
EC21/Dr. Doane
ED22/Mr. Green
EL04/Mr. Hight
EF15/Mr. Rowe
EF15/Mr. Collins
EP24/Mr. Lee Jones
ED12/Mr. Kennel
EC13/Mr. Milner
ED12/Mr. Shelton
EC22/Mr. Sims
EL54/Mr. Singley
/Mr. Robert Cox

ORIGINAL PAGE IS
OF POOR QUALITY

ORGANIZATION	MARSHALL SPACE FLIGHT CENTER	NAME:
SYSTEMS DYNAMICS LABORATORY POINTING CONTROL SYSTEMS BRANCH	HEAO-B ACDS REVIEW TEAM	S. M. SELTZER DATE: JULY 23, 1976

MISSION

1. TO DISCHARGE S&E's ACDS CDR RESPONSIBILITY AS A TEAM (RATHER THAN AS INDIVIDUALS).

2. TO ASSESS TECHNICAL ADEQUACY OF ACDS AND DEFINE ANY POTENTIAL OR EXISTING INADEQUACIES.

IMPLEMENTATION

PERFORM AN IN-DEPTH REVIEW OF HEAO-B ACDS DESIGN AND ASSOCIATED SUBSYSTEMS (SUCH AS ELECTRICAL POWER, RCS, DATA MANAGEMENT) THAT IMPINGE UPON ACDS.

REVIEW TEAM'S NEEDS TO PERFORM MISSION

1. DEFINITION OF S&E's ACDS CDR RESPONSIBILITY.

2. REQUIREMENTS (SPEC's) LEVELED UPON ACDS.

   a. CEI OBSERVATORY SPEC BY MSFC.

   b. ACDS SUBSYSTEM SPEC BY TRW.

QUESTION: WHO IS RESPONSIBLE TO ENSURE b. MEETS a. WITHOUT "OVERKILL?"

ORGANIZATION:	MARSHALL SPACE FLIGHT CENTER	NAME:
SYSTEMS DYNAMICS LABORATORY POINTING CONTROL SYSTEMS BRANCH	HEAO-B ACDS REVIEW TEAM COMPOSITION	S. M. SELTZER DATE: JULY 23, 1976

SHERMAN M. SELTZER	CHAIRMAN	SD LAB
GEORGE B. DOANE, III	ACDS HARDWARE	E&C LAB
CLAUDE E. GREEN	STRUCTURAL DYNAMICS	SD LAB
HERMON HIGHT	SOFTWARE (GENERAL)	SA&I LAB
ARCHIE JACKSON	FLIGHT SOFTWARE	DATA SYS. LAB
LEE JONES	RCS	STRUC & PROP LAB
HANS KENNEL	POINTING, MANEUVERING, & MOMENTUM MANAGEMENT	SD LAB
ROBERT MILNER	ELECTRICAL SYS.	E&C LAB
HARVEY SHELTON	STAB. & CONTROL	SD LAB
C. R. SIMS	ACDS HARDWARE	E&C LAB
MAURICE SINGLEY	SYSTEMS/GROUND SOFTWARE	SA&I LAB

ORIGINAL PAGE IS OF POOR QUALITY

ORGANIZATION:	MARSHALL SPACE FLIGHT CENTER	NAME:
SYSTEMS DYNAMICS LABORATORY POINTING CONTROL SYSTEMS BRANCH	HEAO-B ACDS REVIEW TEAM IMPLEMENTATION PLANS	S. M. SELTZER DATE: JULY 23, 1976

1. MEET TUESDAY AND THURSDAY at 9:00 a.m. IN EXECUTIVE CONFERENCE ROOM/ BLDG. 4487 UNTIL ACDS CDR (21-22 SEP).

2. MINUTES OF MEETINGS

   a. DRAFT PREPARED BY CLAUDE GREEN.

   b. DISSEMINATED TO ALL TEAM MEMBERS AT NEXT SUBSEQUENT MEETING FOR CORRECTIONS.

   c. SUBMITTED TO CLAUDE GREEN (AND DISCUSSED IF NECESSARY) AT NEXT SUBSEQUENT MEETING.

   d. CORRECTED DRAFT TYPED AND DISSEMINATED.

ORGANIZATION:	MARSHALL SPACE FLIGHT CENTER	NAME:
SYSTEMS DYNAMICS LABORATORY	HEAO-B ACDS REVIEW TEAM	S. M. SELTZER
POINTING CONTROL SYSTEMS BRANCH	SCHEDULE	DATE: JULY 23, 1976

LOCATION: EXECUTIVE CONFERENCE ROOM, BLDG. 4487

DAY	DATE	TIME	SUBJECT
FRI	23 JUL 76	1:30 p.m.	ORGANIZATION MEETING.
TUE	27 JUL 76	8:30 a.m.	1. REVIEW OF HEAO-B ACDS BY DALE HOFFMAN, TRW. o TECHNICAL DESCRIPTION. o SIMILARITIES AND DIFFERENCES BETWEEN HEAO-A AND -B. o DOCUMENTATION NOW AVAILABLE. o DOCUMENTATION FORTHCOMING AND WHEN. 2. COMMENTS ON ORGANIZATIONAL MATERIAL FROM 23 JULY MEETING. 3. STRAW MAN SCHEDULE.
THUR	29 JUL 76	9:00 a.m.	DISCUSS STRAW MAN SCHEDULE AND PREPARE TARGET SCHEDULE.
TUE	3 AUG 76	9:00 a.m.	PRESENTATION OF ACDS REQUIREMENTS AND SPECS BY BOB WOLF (?), HEAO PROJECT OFFICE.
THUR	5 AUG 76	9:00 a.m.	PRESENTATION OF EXPERIMENT REQUIREMENTS UPON ACDS BY
TUE	10 AUG 76	9:00 a.m.	PRESENTATIONS BY TEAM MEMBERS ON THEIR SUBSYSTEMS.
THUR	12 AUG 76	9:00 a.m.	PRESENTATIONS BY TEAM MEMBERS ON THEIR SUBSYSTEMS.
TUE	17 AUG 76	9:00 a.m.	PRESENTATIONS BY TEAM MEMBERS ON THEIR SUBSYSTEMS.
THUR	19 AUG 76	9:00 a.m.	PRESENTATIONS BY TEAM MEMBERS ON THEIR SUBSYSTEMS.
TUE	24 AUG 76	9:00 a.m.	PRESENTATIONS BY TEAM MEMBERS ON THEIR SUBSYSTEMS.
THUR	26 AUG 76	9:00 a.m.	PRESENTATIONS BY TEAM MEMBERS ON THEIR SUBSYSTEMS.
TUE	31 AUG 76	9:00 a.m.	1. PREPARE REVIEW TEAM REPORT; 2. CONTINGENCY TIME.
THUR	2 SEP 76	9:00 a.m.	1. PREPARE REVIEW TEAM REPORT; 2. CONTINGENCY TIME.
TUE	6 SEP 76	9:00 a.m.	1. PREPARE REVIEW TEAM REPORT; 2. CONTINGENCY TIME.
THUR	9 SEP 76	9:00 a.m.	1. PREPARE REVIEW TEAM REPORT; 2. CONTINGENCY TIME.

ORIGINAL PAGE IS OF POOR QUALITY

ORGANIZATION:	MARSHALL SPACE FLIGHT CENTER	NAME:
SYSTEMS DYNAMICS LABORATORY POINTING CONTROL SYSTEMS BRANCH	HEAO-B ACDS REVIEW TEAM SCHEDULE	S. M. SELTZER DATE: JULY 23, 1976

(CONTINUED)

DAY	DATE	TIME	SUBJECT
TUE	14 SEP 76	9:00 a.m.	FINAL PREPARATIONS FOR CDR.
THUR	16 SEP 76	9:00 a.m.	FINAL PREPARATIONS FOR CDR.
TUE/WED	22-22 SEP 76	ALL DAY	HEAO-B CDR AT TRW

ORGANIZATION:	MARSHALL SPACE FLIGHT CENTER	NAME:
SYSTEMS DYNAMICS LABORATORY POINTING CONTROL SYSTEMS BRANCH	HEAO-3 ACDS REVIEW TEAM ACTION ITEMS	S. M. SELTZER DATE: JULY 23, 1976

ITEM	ACTION	DUE DATE
1. PREPARE STRAW MAN SCHEDULE.	CLAUDE GREEN	27 JUL 76
2. COMMENTS ON ORGANIZATIONAL MATERIAL FROM JULY 23.	ALL	27 JUL 76
3. CONTACT HEAO PROJECT OFFICE FOR PROPOSED 3 AUG PRESENTATION ON ACDS REQUIREMENTS AND SPECS (BOB WOLF, ?).	CLAUDE GREEN	27 JUL 76
4. SET UP PROPOSED 5 AUG PRESENTATION OF EXPERIMENT REQUIREMENTS UPON ACDS.	CLAUDE GREEN	27 JUL 76

National Aeronautics and
Space Administration

George C. Marshall Space Flight Center
Marshall Space Flight Center, Alabama
35812

Notes - please make 15 cc for Review Team

NASA

Reply to Attn of: EE71- 393-76

August 5, 1976

TO: Distribution

FROM: EE71/B. Thomas Recio

SUBJECT: Minutes of July 28, 1976, Meeting on HEAO-B Targeting

The subject meeting was held at MSFC with attendance as listed in Enclosure 1. R. Farrenkopf of TRW presented the results of TRW analyses concerning the HEAO-B targeting process, guide star selection and availability, and the probability of successful operation. Copies of the presentation material were distributed; additional copies may be obtained from M. Naumcheff, EL12, 453-4735. Definitive data is still lacking on observatory pointing error characteristics due to the delay of several TRW studies. The delay was caused by project funding constraints. However, the meeting successfully broadened the understanding of the targeting problems, provided parametric data needed for further analyses, and focused the remaining analyses required. The next series of study actions is identified in Enclosure 2. A meeting to review the results of these actions is planned for early September, prior to the HEAO-B ACDS CDR.

B. Thomas Recio

B. Thomas Recio
HEAO Engineering Office

2 Enclosures

Distribution:
Attendees

cc:
DD01/R. Smith
HA01/F. Speer
HA23/C. Meyers
EE71/F. Wojtalik
EL01/H. Thomason
EL03/L. Stone
ED12/S. Seltzer

ORIGINAL PAGE IS OF POOR QUALITY

HEAO-B TARGETING MEETING
July 28, 1976

Attendance List

Name	Org.	Phone
M. Naumcheff	MSFC/EL12	453-4735
M. Harrington	MSFC/EL14	453-5496
Volis L. Buckelew	MSFC/EL23	453-1089
Vic Brenes	TRW	(213)536-2293
R. E. Rose	TRW	(213)535-3085
F. Kurtz	MSFC/EL11	453-5200
B. Thomas Recio	MSFC/EE71	453-4331
J. B. Alario	TRW	(213)535-2641
W. Causey	MSFC/EL23	453-0447
R. Stone	MSFC/EL23	453-0442
D. Greenwell	MSFC/EL22	453-2519
J. Novotnak	MSFC/EL12	453-4735
John Bailey	MSFC/EF23	453-5170
Paul J. Zalubas	CSC/GSFC	(301)589-1595
M. E. Singley	MSFC/EL54	453-2713
B. D. Dolerhie	MSFC/EL12	453-4735
P. Davenport	GSFC/514	982-2588
S. Murray	SAO	(617)495-7205
E. J. Schreier	SAO	(617)495-7205
R. Farrenkopf	TRW Systems	(213)536-3590
P. Craighead	MSFC/EL54	453-2713
D. P. Hoffman	TRW/ACDS	(213)535-3085
E. A. Berkery	TRW/ACDS/OCC	(301)982-2772
H. Hight	MSFC/EL04	453-5222
R. Wolf	MSFC/EE71	453-4217
T. Little	MSFC/EF25	453-0996
C. D. Carlile	MSFC/HA23	453-1830

Enclosure 1

ORIGINAL PAGE IS
OF POOR QUALITY

ORIGINAL PAGE IS
OF POOR QUALITY

HEAO-B TARGETING MEETING
JULY 28, 1976
ACTION ITEMS

ACTION ITEM NO.	ACTION	ACTIONEE	DUE DATE
1.	Evaluate the confidence in a Guide Star separation angle scheme for verifying pointing	TRW (V. Brenes)	CDR Data Package
2.	Provide updated data on Star Tracker (STA) characteristics based on flight article data a. Sensitivity b. "Drop Track" response c. Color sensitivity	SAO (S. Murray)	August 16, 1976 (1st Flight Article) October 1976 (All Flight Articles)
3.	Provide current data on RGA characteristics, including thermal distortion effects a. Alignment/Scale Factor b. Drift Rate	TRW (V. Brenes)	August 16, 1976
4.	Refine the parametric data on Probabilities of Unambiguous Guide Stars, Ambiguous Guide Stars, and Guide Stars a. Effect of updated STA model b. "Fringe" Effect	TRW (V. Brenes)	CDR Data Package
5.	Update and complete the parametric data on probabilities of getting lost a. Complete star catalog b. Incomplete catalog	TRW (V. Brenes)	CDR Data Package

Enclosure 2

HEAO-B Targeting Meeting, July 28, 1976, Action Items

ACTION ITEMS	ACTION	ACTIONEE	DUE DATE
6.	Evaluate the probability of getting lost against the mission DOP characteristics a. Slew angle distribution b. Requirements on DOP to minimize "getting lost"	MSFC (F. Kurtz)	By CDR
7.	Evaluate the propagation of "Lost in the Small" through successive slews for each of the conditions of (a) No Guide Star acquisition and (b) False Guide Star acquisition, and for each of Case A: 4 cycles between two targets, 30 min dwell per target, Slew angle = 110 deg Case B: 4 successive different targets, 30 min dwell per target, Slew angles = 30 deg, 90 deg, 180 deg	TRW (V. Brenes)	Post CDR
8.	Identify and evaluate operational techniques for recovery from lost conditions a. Lost in Small b. Lost in Large	MSFC (F. Kurtz)	CDR Data Pack
9.	Evaluate the cost and other impacts of star catalog augmentation through ninth magnitude a. Complete sky b. Target mini-catalogs (IUE system)	GSFC (P. Davenport)	Sept. 7, 1976

ORIGINAL PAGE IS OF POOR QUALITY

REVIEW ITEM DISCREPANCY (RID)

[illegible]	DATE 19 Oct 1976	PAGE 1 OF 1
ORIGINATOR: SELTZER	SCHEDULED COMPLETION:	RID NO: [illegible]
ASSIGNED TO:	NASA CHAIRMAN:	END ITEM NO
ACCEPTED BY:		REVIEW:

SUBJECT:

Ensuring that components meet the specifications

DESCRIPTION:

The MSFC design laboratories must receive the hardware component data packages that go with the COQ's in sufficient time (three weeks ahead of the COQ "need dates") so that MSFC can review them prior to the date the COQ's must be signed.

REFERENCE:

CLOSEOUT

ACTION TAKEN:

ACTION BY (ACTIONEE):	APPROVAL (SUPERVISOR):	ORGINATOR:	NASA PROJECT CLOSURE:
DATE:	DATE:	DATE:	DATE:

[illegible] (January 1976)

ORIGINAL PAGE IS OF POOR QUALITY

APPENDIX C

MEMO EE71-390-76, WOJTALIK TO DR. LOVINGOOD, DATED AUGUST 3, 1976, SUBJECT: "HEAO-B ACDS AD HOC REVIEW TEAM"

National Aeronautics and
Space Administration

George C. Marshall Space Flight Center
Marshall Space Flight Center, Alabama
35812

NASA

Reply to Attn of: EE71-390-76

August 3, 1976

TO: ED01/Dr. Lovingood

FROM: EE71/Mr. Wojtalik

SUBJECT: HEAO-B ACDS Ad Hoc Review Team

REF: (1) Memo EE71-85-76, ACDS Ad Hoc Review Team, dated February 10, 1976
(2) Memo ED12-76-58, Formation of HEAO-B ACDS Review Team, dated July 26, 1976

This letter is confirmation of our request for continuance of the ACDS Review Team that was established in response to reference (1). Extension of the team activities is required for an indepth evaluation of the proposed HEAO-B ACDS.

We understand that Dr. S. Seltzer/ED12 is now the chairman of the Review Team and we appreciate the immediate action he has taken in organizing and initiating near-term activities. The material (ref 2) that was presented at the first meeting of the Review Team where Dr. Seltzer served as chairman describes the mission and expected composition of the membership. Any changes to the membership list should be resolved between Dr. Seltzer and the laboratory recommending the change.

Providing support to the HEAO-B ACDS CDR and follow-up actions resulting from the CDR are the immediate goals for the Team. The CDR is now scheduled for the week of September 20, 1976.

Please contact Mr. R. Wolf/EE71 if we can be of any assistance in performing the Team's mission.

Fred S. Wojtalik
HEAO Chief Engineer

cc: see page 2

cc:
HA01/F. Speer
EE01/W. Marshall
EL01/H. Thomason
EC01/F. Moore
EF01/J. T. Powell
EP01/A. McCool
ES01/C. Lundquist
EL03/L. Stone
ED01/H. Worley
ED22/C. Green
EC21/J. Mack
EC13/E. Baggs
EF22/E. Maynard
ED12/S. Seltzer
EE71/R. Wolf

APPENDIX D

MEMO ED12-76-62, SELTZER TO WOJTALIK, DATED AUGUST 12, 1976, SUBJECT: "HEAO-B ACDS REVIEW TEAM CHARTER"

PRECEDING PAGE BLANK NOT FILMED

National Aeronautics and
Space Administration

George C. Marshall Space Flight Center
Marshall Space Flight Center, Alabama
35812

Reply to Attn of: ED12-76-62

AUG 12 1976

TO: EE71/Fred Wojtalik

FROM: ED12/S. M. Seltzer, Chairman, HEAO-B ACDS Review Team

SUBJECT: HEAO-B ACDS Review Team Charter

Enclosed is the charter for the HEAO-B ACDS Review Team. It has been prepared by the team in an attempt to carefully delineate our responsibilities. Expediency has been included in order to meet the imminent CDR schedule. For instance, we are not looking at the ground attitude determination system. We assume the information generated on the ground is correct (see paragraph 3f of the charter). We assume you probably will want to assemble a team to review that particularly thorny problem separately. We also assume that time exists to cope with that problem after the HEAO-B CDR.

I know you want to perpetuate a review team after the CDR. We recommend that you determine what items or subsystems you wish reviewed (such as ground attitude determination) and that task agreements be developed for the S&E laboratories to support such efforts.

Sherman M. Seltzer
Chairman, HEAO-B ACDS
Review Team

Enclosure
Charter

ORIGINAL PAGE IS
OF POOR QUALITY

cc:
EC01/Mr. Moore
ED01/Dr. Lovingood
ED01/Dr. Worley
EL01/Dr. Thomason
EP01/Mr. McCool
ACDS Team Members
EC21/Dr. Doane
ED22/Mr. Green
EL04/Mr. Hight/Mr. Cox
EF15/Mr. Rowe/Mr. Collins
EP24/Mr. Lee Jones
ED12/Mr. Kennel
EC13/Mr. Milner
ED12/Mr. Shelton
EC22/Mr. Sims
EL54/Mr. Singley/Mr. Craighead

ORIGINAL PAGE IS
OF POOR QUALITY

August 12, 1976

HEAO-B ACDS REVIEW TEAM CHARTER

A team composed of members of the Data Systems Laboratory, the Electronics and Control Laboratory, the Systems Analysis and Integration Laboratory, the Systems Dynamics Laboratory, and the Structures and Propulsion Laboratory has been convened to review the HEAO-B Attitude Control and Determination System (ACDS). The team is entitled the "HEAO-B ACDS Review Team."

The mission of the team is to discharge GSFC's ACDS Critical Design Review (CDR) responsibility to assess as a team the HEAO-B ACDS technical adequacy and identify any potential or existing inadequacies. This will be implemented by performing an in-depth review of the HEAO-B ACDS design. This mission may be defined as consisting of three steps:

1. Determine the ACDS performance.

2. Determine if that performance meets the ACDS subsystem specification (assumed to be a specification developed by TRW to meet the MSFC-developed CEI specification), and if not where it fails. It also is assumed that the ACDS subsystem specification is SS7-29, Rev. A, dated January 6, 1976; release dated March 17, 1976; configuration and data management dated March 22, 1976.

3. Determine if the TRW-developed ACDS subsystem specification meets the CEI specification (MSFC-72 M 10007, Rev. A, including Change 13 dated April 22, 1976). Where discrepancies exist, they will be listed and defined in the Review Team's Final Report.

The team will perform this mission in time to participate in the HEAO-B ACDS CDR (presently scheduled for September 21-22, 1976 at TRW). Appropriate "RID's" will be prepared before the CDR takes place. Immediately thereafter the team will prepare a report describing its findings, including a description of the team's interaction in the CDR; submit the report to Mr. Fred Wojtalik; and disband.

The flight software (i.e., the software included in the on-board computer) will be investigated only to the flow chart level. The flight hardware will be investigated at least to the block diagram level. Because block

ORIGINAL PAGE IS
OF POOR QUALITY

diagrams can be to varying degrees of detail, the concerned team member will determine the level of detail on a case-by-case basis.

Definitions

1. Technical adequacy. The ACDS will meet the ACDS subsystem specifications during HEAO-B activation and during all operational modes defined in the CEI specification.

2. Technical inadequacy. Any ACDS item--software, hardware, or analytical--that causes the ACDS not to meet the ACDS subsystem specifications during activation or during any of the operational modes defined in the CEI specifications.

3. ACDS. For the review team's purposes, the ACDS shall be assumed to be only the spacecraft-borne system that includes the following:

a. The guidance and control laws and the software and hardware required to implement them.

b. The on-board implementation of the pointing, maneuvering, and momentum unloading schemes and the required associated on-board software and hardware.

c. The Star Trackers (ST), Reference Gyroscope Assemblies (RGA), Reaction Wheel Assemblies (RWA), Reaction Wheel Electronics Assemblies (RWEA), Sun Sensor Assemblies (SSA), the Transfer Assembly (TA), and the Digital Processor Assemblies (DPA).

d. Those portions of the Reaction Control System (RCS) and the Electrical System that interact with or otherwise affect the ACDS.

e. The ACDS shall not include the ground software.

f. The ground-generated information (e.g., two sets of quaternions, the RG τ-matrix, RW matrix, target and maneuver information) used by the ACDS is assumed to be properly and correctly determined and communicated to the ACDS.

ORIGINAL PAGE IS
OF POOR QUALITY

g. That [illegible] excluded from this review. It is assumed to meet the requirements set forth by those who need ACDS data.

Sherman M. Seltzer
Chairman, HEAO-B ACDS
Review Team

ORIGINAL PAGE IS
OF POOR QUALITY

APPENDIX E

LISTING OF AVAILABLE HEAO-B DOCUMENTATION

LISTING OF AVAILABLE DOCUMENTATION FROM DALE HUFFMAN, TRW.

APPENDIX A

HEAO-B ACDS Design Data Base

The design analysis and simulation of the HEAO-B ACDS has been based upon data developed from observatory level and subsystem interface requirements allocations. These basic data are summarized in the following table for reference. The documentation availability is also noted in the table. Only that not previously included in data packages is included in this data package.

ORIGINAL PAGE IS
OF POOR QUALITY

Design Data Base Documentation

DOCUMENT	HEAO-A ACDS CDR	HEAO-B ACDS PDR	ENCLOSED
Mechanical Design			
HEAO-75-460-477, "Revisions to HEAO-B Data Base," D. P. Hoffman, 4 November 1975		App. B.1	
HEAO-75-310-217, "Mass Properties of HEAO-B for Analysis," R. E. Frazier, 7 October 1975		App. B.1	
HEAO-75-460-391, "HEAO-B Design Verification Data Base," D. P. Hoffman, 4 September 1975		App. B.1	
HEAO-75-420-086A, "Revised HEAO-B Mass Properties Uncertainties for ACDS Design," L. Korba, 19 August 1975		App. B.1	
HEAO-76-420-057, "HEAO-B Sun Sensor Field-of-View (FOV) Potential Blockage," A. H. Carlin, 28 July 1976			X
HEAO-75-420-096, "Sun Sensor Field-of-View (FOV) Potential Blockage," R. W. Steel, 15 August 1975	App. B.1		
Structures and Dynamics			
HEAO-75-440-165, "Natural Modes and Frequencies for the On-Orbit HEAO-B Observatory," K. E. Barry, 28 October 1975		App. B.1	
HEAO-76-440-049, "HEAO-B Final Separation Analysis and S-Band Antenna Dynamic Clearance," K. E. Barry, 10 June 1976			X
HEAO-75-440-144, "HEAO-B Separation Analysis," C. M. Hwang, 24 September 1975		App. B.2	
HEAO-75-440-117, "HEAO-B Experiment On-Orbit Response to Reaction Wheel Unbalances," R. A. Browne, 17 July 1975		App. B.3	
HEAO-75-440-174, "HEAO-B Reaction Wheel Assembly Fundamental Mounting Resonance," K. E. Barry, 26 November 1975		App. B.3	

Design Data Base Documentation (Continued)

DOCUMENT	HEAO-A ACDS CDR	HEAO-B ACDS PDR	ENCLOSED
Flight Mechanics			
HEAO-76-320-003, "HEAO-B Orbit Decay and Ballistic Coefficient Update," R. R. Williams, 23 February 1976			X
HEAO-76-460-005, "HEAO-B Orbital Decay Time History Design Base," D. P. Hoffman, 8 January 1976		App. C	
Electrical			
HEAO-76-310-099, "Design Limits on Reaction Wheel Input Current," E. P. Todosiev, 27 May 1976			X
HEAO-76-310-079, "Wheel Over-Current Effect On Other Spacecraft Functions," R. E. Frazier, 19 April 1976			X
HEAO-75-400-020, "ACDS Design Requirements for HEAO-B Peak Loads Problems," D. C. Kirby/R. E. Frazier, 6 June 1975		App. B.2	
Experiments			
HEAO-76-310-110, "Pointing Restriction of the HEAO-B Observatory," E. P. Todosiev, 22 June 1976			X
HEAO-75-310-161, "Attitude Maneuver Constraint on HEAO-B," E. P. Todosiev, 24 July 1975		App. B.2	
HEAO-B-76-KL-426, "Update of Action Item 12BM10," T. E. Kirchner, 13 August 1976			X
HEAO-B-76-KL-413, "Response to Action Item #12BM10," T. E. Kirchner, 27 July 1976			X
HEAO-MC-76-132C, "Contract NAS8-28300, Modification No. 144," R. W. Mick, 26 May 1976			X
HEAO-76-460-109, "HEAO-B Star Tracker Data Base," D. P. Hoffman, 7 April 1976			X

Design Data Base Documentation (Continued)

DOCUMENT	HEAO-A ACDS CDR	HEAO-B ACDS PDR	ENCLOSED
RCS			
HEAO-74-490-15, "MRE-1 Thruster Specific Impulse for Various Firing Modes," R. L. Sackheim/R. A. Carlson, 2 October 1974	App. B.6		
HEAO-74-490-20, "FLTSATCOM 1.0 lbf Thruster Steady State Thrust Level Characteristics," D. E. Fritz, 4 November 1974	App. B.6		
HEAO-75-490-054, "Impulse Bits, MRE-1 Thrusters," R. A. Carlson, 5 June 1975	App. B.6		
Systems Engineering			
HEAO-75-310-160, "Effect of Gas Leakage in the Array Release System on HEAO-B Attitude Control," E. P. Todosiev, 23 July 1975		App. B.3	
HEAO-75-310-231, "Residual Momentum During HEAO-B Sun Acquisitions," R. E. Frazier, 24 October 1975		App. B.2	
HEAO-75-460-437, "Residual Momentum During HEAO-B Sun Acquisitions," D. P. Hoffman, 13 October 1975		App. B.2	
HEAO-75-310-209, "Initial Conditions for HEAO-B Entry into Failure Mode Control," R. E. Frazier, 24 September 1975		App. B.2	
HEAO-76-310-123, "HEAO-B Structural Deformations for ACDS Analysis," E. P. Todosiev, 10 August 1976			X
ACDS Internal			
HEAO-76-460-160, "Replacement of HEAO-B RWA Voltage Commands by Current Commands," R. E. Rose, 13 May 1976			X
HEAO-76-460-033, "Consistency of Motor Performance - HEAO RWA," J. C. Randall, 13 February 1976			X

ORIGINAL PAGE IS OF POOR QUALITY

APPENDIX B

Mathematical Models

Models representing environmental effects, hardware characteristics, dynamics and kinematics, and software operations have been developed in support of the ACDS analysis and simulation tasks. The table which follows indicates the documentation which relates to these models. Since much of these data have been provided previously and is somewhat voluminous in some cases, only that not already submitted in design review packages is actually included in this appendix. The tabular entries show the specific location of the previously supplied data.

Mathematical Model Descriptions

DOCUMENT	HEAO-A ACDS CDR	HEAO-B ACDS PDR	ENCLOSED
Disturbance Torques			
HEAO-74-460-069, "Disturbance Model for Gravity Gradient Torques," V. R. Fish, 20 September 1974	App. C.3		
HEAO-75-460-212, "Altitude - Air Density Mode for HEAO ACDS Simulation," V. R. Fish, 29 April 1975	App. C.3		
HEAO-74-460-084, "Magnetic Disturbance Torque Model for HEAO," V. R. Fish, 30 September 1974	App. C.3		
HEAO-75-460-530, "HEAO-B Aerodynamic Disturbance Torque Model," H. Nakano, 19 December 1975		App. C	
HEAO-76-320-003, "HEAO-B Orbit Decay and Ballistic Coefficient Update," R. R. Williams, 23 February 1976			See App. A
Hardware			
Gyros			
HEAO-74-460-085, "Reference Gyro Assembly Model," T. T. McElroy, 1 October 1974	App. C.1		
HEAO-74-460-138, "Gyro Noise Considerations," T. T. McElroy, 5 November 1974	App. C.1		
HEAO-75-460-055, "Gyro Noise Model - Parameter Considerations," T. T. McElroy, 8 January 1975	App. C.1		
HEAO-75-460-227, "Gyro Model - Power Spectral Density Characteristics," T. T. McElroy, 5 May 1975	App. C.1		
HEAO-76-460-097, "Bendix Gyro Data," T. T. McElroy, 26 March 1976			X

ORIGINAL PAGE IS OF POOR QUALITY

Mathematical Model Descriptions (Continued)

DOCUMENT	HEAO-A ACDS CDR	HEAO-B ACDS PDR	ENCLOSED
Hardware (Continued)			
Star Tracker			
HEAO-76-460-109, "HEAO-B Star Tracker Data Base," D. P. Hoffman, 7 April 1976			See App. A
HEAO-75-460-479, "HEAO-B Star Tracker Model," T. T. McElroy 29 October 1975		App. C	
Reaction Wheels			
HEAO-76-460-237, "Test of Sperry Reaction Wheel Motor with HEAO-B Current Drive RWEA, H. Nakano, 13 August 1976			X
HEAO-76-460-236, "Mathematical Models of HEAO-B Reaction Wheel Motor with Current Drive RWEA," H. Nakano, 13 August 1976			X
HEAO-76-460-172, "Sperry RW Motor Test Results," H. Nakano, 21 May 1976			X
HEAO-74-460-209, "Mathematical Model of HEAO-B Reaction Wheel Motor," H. Nakano, 11 December 1974		App. C	
Sun Sensors			
HEAO-75-460-367, "Sun Sensor Models and Test Data Comparisons," D. P. Hoffman, 28 August 1975	App. C.2		
TRW IOC 7347.4-131, "Angular Error Due to Earth Albedo--HEAO Narrow Angle Sun Detector," S. A. Uchizono, 12 June 1975			X
HEAO-75-460-270, "Estimation of Noise for HEAO Sun Sensor Assemblies," R. E. Edwards, 11 June 1975	App. C.2		

Mathematical Model Descriptions (Continued)

DOCUMENT	HEAO-A ACDS CDR	HEAO-B ACDS PDR	ENCLOSED
Hardware (Continued)			
Sun Sensors			
HEAO-75-460-238, "Earthshine Calculations for the HEAO ZSSA Wide Angle Detectors," R. E. Edwards, 20 May 1975	App. C.2		
HEAO-75-460-088, "Coarse Sun Sensor and Output Processing Models," D. P. Hoffman, 21 February 1975	App. C.2		
HEAO-74-460-204, "Coarse Detector Output," D. R. Spetter, 9 December 1974	App. C.2		
HEAO-74-460-153, "ZSSA Narrow Angle Sensor Functional Description and Nominal Performance Characteristics," R. E. Edwards, 18 November 1974	App. C.2		
Software			
D01137, "Flight Program Requirements Document for HEAO ACDS (FPH-B)," 12 January 1976			DPA Software Data Package

APPENDIX C

Attitude Reference Analyses

The description and performance analyses results of the on-board attitude reference implemented in the DPA software are contained in the documents of this appendix. The basic form of the reference is identical to that of HEAO-A with the addition of an autonomous star tracker update algorithm. The gyro processing, attitude propagation, ground update, and sun sensor update algorithms are unchanged from HEAO-A. The star tracker processing and star tracker update algorithm are unique to the HEAO-B design. The following table identifies the applicable documentation and where it can be found in terms of data packages. Only that material not previously provided in other data packages is contained herein.

Attitude Reference Design

DOCUMENT	HEAO-A ACDS CDR	HEAO-B ACDS PDR	ENCLOSED
HEAO-76-460-100, "Maneuver Attitude Reference Performance HEAO-B," T. T. McElroy, 25 March 1976			X
HEAO-76-460-062, "Action Item Response - Star Update Algorithm (HEAO-B)," T. T. McElroy, 9 March 1976			X
HEAO-76-460-043, "HEAO-B Attitude Update Considerations," T. T. McElroy, 16 February 1976			X
HEAO-MC-76-132C, "Contract NAS8-28300, Modification No. 144," R. W. Mick, 26 May 1976			See App. A
HEAO-76-460-079, "HEAO-B Attitude Reference System Description," T. T. McElroy, 16 March 1976			X
HEAO-76-460-037, "HEAO-B On-Board Attitude Reference Performance - Momentum Dump, Maneuvers and Celestial Point Modes," T. T. McElroy, 8 February 1976			X
HEAO-75-460-538, "HEAO-B On-Board Attitude Reference Performance - Celestial Point," T. T. McElroy, 30 December 1975		App. F	
HEAO-75-460-517, "HEAO-B Attitude Reference Performance Run Schedule - Point Mode," T. T. McElroy, 26 November 1975		App. F	

APPENDIX D

Normal Sun Acquisition Analyses

The design implementation of the HEAO-B Normal Sun Acquisition (NSA) attitude controllers is identical to that for HEAO-A. Differences do exist in the specific numerical values associated with the control constants used in the software flight program however. Performance verification in terms of sun acquisition, sun point, and linear stability has been demonstrated for the applicable HEAO-B mass properties and orbital characteristics. The documentation of the results of these analyses are listed in the following table. These form the bases for the summary data of Section 6 of the main volume.

Normal Sun Acquisition Design

DOCUMENT	HEAO-A ACDS CDR	HEAO-B ACDS PDR	ENCLOSED
HEAO-75-460-252, "Normal Sun Acquisition Sun Point Accuracy," D. P. Hoffman, 30 May 1975	App. E.3	App. I	
HEAO-76-460-117, "NSA Pointing Accuracy Using Narrow Angle Sun Sensor," D. P. Hoffman, 12 April 1976			X
HEAO-76-460-211, "HEAO-B Normal Sun Acquisition with Low Scan Rate," M. L. Ownby, 27 August 1976			X
HEAO-75-460-505, "Sun Point Performance Verification Study of the HEAO-B Normal Sun Acquisition Mode Controller," E. R. Edge, 24 November 1975		App. I	
HEAO-75-460-503, "HEAO-B Normal Sun Acquisition Mode Linear Analysis with Flexible Body Dynamics and Propellant Slosh Effects," E. R. Edge, 17 November 1975		App. I	
HEAO-75-460-454, "Acquisition Performance of the HEAO-B Normal Sun Acquisition Controller," E. R. Edge, 23 October 1975		App. I	
HEAO-75-460-428, "Initial Simulation Run Schedule - Normal Sun Acquisition Mode - HEAO-B," E. R. Edge, 6 October 1975		App. I	

APPENDIX E

Celestial Point Analyses

The HEAO-B requirement for accurate celestial target pointing and stability is provided by the reaction wheel controller which allows stabilized target pointing, wheel unloading via the RCS, and target-to-target maneuvering. Documentation of the analyses and simulation results applicable to this attitude control operating mode is summarized in the following table. The data package in which the documents appear is also indicated for cross reference and to avoid the necessitate here for duplication of previously supplied material.

Celestial Point Design

DOCUMENT	HEAO-A ACDS CDR	HEAO-B ACDS PDR	ENCLOSED
HEAO-76-460-160, "Replacement of HEAO-B RWA Voltage Commands by Current Commands," R. E. Rose, 13 May 1976			See App. A
HEAO-76-460-175, "Rescaling of Reaction Wheel Control Parameters," H. Nakano, 21 May 1976			X
HEAO-76-460-220, "Celestial Point Error Analyses for HEAO-B," T. T. McElroy, 15 July 1976			X
HEAO-76-460-233, "Gyro Drift Uncertainty Estimate (HEAO-B)," D. P. Hoffman, 11 August 1976			X
HEAO-76-460-146, "HEAO-B Celestial Point Error Analysis," D. P. Hoffman, 7 May 1976			X
HEAO-76-460-078, "Effects of Parameter Variations on HEAO-B Maneuver, Point, and Unloading Performance," H. Nakano, 30 July 1976			X
HEAO-76-460-049, "HEAO-B Design Verification - Nominal Maneuver Performance, H. Nakano, 1 March 1976			X
HEAO-76-460-036, "HEAO-B Design Verification--Nominal Point and RW Momentum Unloading," H. Nakano, 16 February 1976			X
HEAO-76-460-178, "HEAO-B Linear Stability Analysis--Maneuver, Point, and Unloading," H. Nakano, 9 August 1976			X
HEAO-76-460-184, "RWEA Bandwidth Requirement," H. Nakano, 28 May 1976			X
HEAO-75-460-537, "HEAO-B Design Verification Cases for Celestial Point and RW Momentum Unloading," H. Nakano, 29 December 1975		App. 6	

Celestial Point Design (Continued)

DOCUMENT	HEAO-A ACDS CDR	HEAO-B ACDS PDR	ENCLOSED
HEAO-75-460-472, "Maneuver Cases for HEAO-B Design Verification Studies," H. Nakano, 31 October 1975		App. 6	
HEAO-75-460-215, "Modifications of HEAO-B Reaction Wheel Control System," H. Nakano, 2 May 1975		App. 6	
HEAO-S-74-406, "HEAO-B Maneuvers," H. Nakano, 1 May 1974		App. 6	
HEAO-76-460-226, "RCS Requirements for HEAO-B," V. R. Fish, 27 July 1976			X
HEAO-75-460-536, "HEAO-B Impulse and Torque Survey Using Computer Program HITSB," H. Nakano, 23 December 1975		App. D	
HEAO-76-460-092, "Recovery from Large Disturbances During RWA Maneuvers," V. R. Fish, 22 March 1976			X

APPENDIX F

First Sun Acquisition Analyses

The First Sun Acquisition (FSA) attitude control mode is implemented in dedicated hardwired electronics in the transfer assembly. The design including the actual control gains, time constants, and logic are identical in the FSA mode for HEAO-A and -B. The documentation applicable to the analyses and simulation results for this operating mode are listed in the following table. Since all of these have been provided in the HEAO-B ACDS PDR data package as noted, they are not included herein other than by reference.

ORIGINAL PAGE IS
OF POOR QUALITY

First Sun Acquisition Design

DOCUMENT	HEAO-A ACDS CDR	HEAO-B ACDS PDR	ENCLOSED
HEAO-75-460-535, "HEAO-B First Sun Acquisition Following Separation," V. R. Fish, 19 December 1975		App. H	
HEAO-75-460-533, "Linear Stability Analysis of the Failure Sun Acquisition Controllers - HEAO-B," H. Kaichi, 19 December 1975		App. H	
HEAO-75-460-532, "Performance of the FSA Mode Controller in Long Term Sun Point Operation - HEAO-B," H. Kaichi, 19 December 1975		App. H	
HEAO-75-460-531, "Recovery Sun Acquisition Performance in the Failure Sun Acquisition Mode - HEAO-B," H. Kaichi, 19 December 1975		App. H	
HEAO-75-460-421, "Preliminary Simulation Run Schedule for HEAO-B FSA Mode Verification," H. Kaichi, 30 September 1975		App. H	
HEAO-76-310-109, "Action Item No. 9 HEAO-B Observatory System PDR," E. P. Todosiev, 21 June 1976			X

APPENDIX G

Ground Software Requirements and Performance

The ACDS is allocated the function of specifying the requirements for the ground software associated with star identification, attitude determination, and parameter estimation. These requirements are to be implemented by NASA/GSFC. Performance analyses associated with these functional requirements is also an ACDS responsibility. These analyses have utilized the tools and techniques which have been developed by TRW and thus do not actually replicate the GSFC implementations. The data contained in the documentation listed in the following table reflects the results of these studies. In parallel with the ACDS tasks, there are also a set of studies which are ACDS related but which are being conducted as part of the Mission Operations activities. These results are interrelated so closely with the ACDS design that they are also referenced in the table.

Ground Software Design

DOCUMENT	HEAO-A ACDS CDR	HEAO-B ACDS PDR	ENCLOSED
HEAO-76-460-112, "HEAO-B Attitude Estimation," R. L. Farrenkopf, 26 March 1976			X
AIAA Paper No. 74-903, "Generalized Results for Precision Attitude Reference Systems Using Gyros," R. L. Farrenkopf, August, 1974			X
Attitude Estimation Results, R. L. Farrenkopf, 28 June 1974			X
HEAO-76-460-186, "The HEAO-B Slew Maneuver: Expected Attitude Errors and Rate Gyro Assembly Calibration," R. L. Farrenkopf, 22 June 1976			X
HEAO-75-460-515, "HEAO-A Attitude Estimator Initial Star Identification," R. L. Farrenkopf, 10 December 1975			X
HEAO-75-460-272, "The Likelihood of Correct Normal Mode Star Identification in Attitude Estimation Applications with Consideration to HEAO," R. L. Farrenkopf, 10 June 1975	App. F		
HEAO-75-460-177, "Attitude Determination Software for HEAO," R. L. Farrenkopf, 10 April 1975	App. F		
HEAO-76-460-156, "HEAO-B Guide Star Availability as Influenced by Target Window Area and Minimum Acceptable Separation," R. L. Farrenkopf, 4 May 1976			X

APPENDIX F

MEMO ED12-76-88, SELTZER TO WOJTALIK, DATED OCTOBER 13, 1976, SUBJECT: "HEAO-B ACDS PRE-CDR"

National Aeronautics and
Space Administration

George C. Marshall Space Flight Center
Marshall Space Flight Center, Alabama
35812

NASA

Reply to Attn of: ED12-76-88

October 13, 1976

TO: EE71/F. Wojtalik

FROM: ED12/S. M. Seltzer, Chairman, HEAO-B ACDS Review Team

SUBJECT: HEAO-B ACDS Pre-CDR

On October 6-7, the HEAO-B ACDS Review Team met with Messrs. Dale Hoffman, Dick Rose, and Ernie Todosiev of TRW and Dr. Steve Murray of the Smithsonian Astrophysical Observatory for a pre-CDR. As you know (Re: My memo ED12-76-83 to you, subject: Review of HEAO-B ACDS CDR Documentation, dated October 5, 1976), we reviewed the CDR documentation in detail. Our comments (corrected from those you received as Enclosure 1 of the referenced memo) are included herein as Enclosure 1. The TRW personnel prepared an informal set of comments (Enclosure 2) after our pre-CDR meeting. The item numbers of the two enclosures correspond to each other.

As a result of our pre-CDR and subsequent Review Team study and discussions, we have categorized our 66 comments and questions into the following three groups.

1. No further action required. Items 6, 8, 14, 40, 42 (except for comments on "dashed lines"--see paragraph 2, Item 42, below), 43, 44, 49, and 63.

2. RIDs to be prepared. RID #1 (Seltzer). The following items will be included in a RID describing the need for updating the HEAO-B ACDS CDR documentation. Either an addendum and or a set of change sheets for existing pages must be prepared and maintained as current, for this will be the only HEAO-B ACDS descriptive documentation most MSFC engineers will possess. The RID will state that the following items should be included in this updated documentation: Items 1-5, 7, 11-13, 16, 17, 19-28, 30, 32, 33, 35-39, 41, 42 (identify dashed lines), 46, 48, 50-55, and 59.

RID #2 (Hight). Item 9.

RID #3 (Seltzer). Item 10.

RID #4 (Kennel). That portion of Item 15 referring to lifetime.

RID #5 (Milner). That portion of Item 15 referring to depth of discharge.

ORIGINAL PAGE IS
OF POOR QUALITY

RID #6 (Green). That portion of Item 15 referring to uncontrolled tumbling.

RID #7 (Kennel). Item 57.

RID #8 (Shelton). Item 61.

RID #9 (Kennel). Item 62.

RID #10 (Jones). Item 64.

RID #11 (Singley). Item 66.

3. Items that either need further effort or are cause for concern. Items 18, 29, 31, 34, 45, 47, 50, 56, 58, 60, and 62; all items listed on the sheet (MSFC Form 1908) summarizing comments on HEAO-B Flight Program Requirements Document, D01137, January 21, 1976. The latter will be provided at a later date.

Sherman M. Seltzer
Chairman, HEAO-B ACDS
Review Team

2 Enclosures
1. Review Team Comments
2. TRW Comments

cc:
EC01/Mr. Moore
ED01/Dr. Lovingood
ED01/Mr. Sisson
ED01/Dr. Worley
ED11/Dr. Blair
EL01/Dr. Thomason
EP01/Mr. McCool
ACDS Team Members
EC21/Dr. Doane
ED22/Mr. Green
EL04/Messrs. Hight/Cox
EF15/Messrs. Rowe/Collins
EP24/Mr. Lee Jones
ED12/Mr. Kennel
EC13/Mr. Milner
ED12/Mr. Shelton
EL54/Messrs. Singley/Craighead
EC22/Mr. Sims

RECORD OF COMMENTS ON PUBLICATIONS

DATE: October 4, 1976

SUBJECT: HEAO-B ACDS CDR (26000-460-042, 19 October 1976)

REVISION NOTES FROM: S. M. Seltzer, HEAO-B ACDS Review Team, MSFC

ITEM NO.	PAGE	PARAGRAPH	LINE*	COMMENT (Exact wording of recommended change must be given)
1	1-3	--	--	Glossary is incomplete (e.g., DHA, PSU, TRIU, NVE, etc).
2	2-1	2.1	14	Add: "...on-board logic upon <u>either</u> separation from..."
3	2-1	2.1	15	Do you want to use the word "INSIPIENT" (as shown) or the word INCIPIENT (different spelling, different meaning)? Is its use as an adverb modifying "catastrophic" the use you really intend?
4	2-2	--	--	Figure 2-1 does not indicate inputs to RGA 5 and 6 from non-essential bus power and switching commands. No inputs to RGAs from Transfer Assembly are indicated. What is the significance of dashed and solid arrows from Transfer Assemblies for Star Tracker control?
5	2-3	--	--	Figure 2-2 is not labeled properly for RGA orientations. Also, it does not show the angle between RW's and major axes of spacecraft.
6	2-5	1	last	Question. Are narrow angle ZSSA sun aspect signals used actively in the on-board control, or only to augment ground attitude determination?
7	2-5	2	6	Replace "<u>sun point failure mode</u>" with "first sun acquisition mode." This should be done throughout the documentation.
8	2-5	2	8	Question. What actions have been taken to assure correct telemetry signals, i.e., no inversions as received on ground?
9	2-7	2.2	last sent.	Add: The present planned operation is to enter NSA via command from the SCP before loss of tracking at Ascension.
10	2-7	--	--	CEI and ACDS subsystem specification nomenclature mode should be made compatible.
11	2-7	2.2	11	Comment: FSA is also initiated by LV separation signal.
12	2-8	2	4	During pointing, the x-z plane is constrained to $\pm$ 1° of the sun line. This should be stated.
13	2-8	3	5	Star tracker data correction is done on the ground.
14	2-8	--	--	When is the last possible date for defining operating characteristics and calibration data for the ST without impacting either the flight ACDS or the ground software?

* Reference to line number within the paragraph or subparagraph.

MSFC - Form 1806 (August 1968)

Enl 1

RECORD OF COMMENTS ON PUBLICATIONS

DATE: October 4, 1976

SUBJECT: HEAO-B ACDS CDR (26000-460-042, 19 October 1976)

REVISION NOTES FROM: S. M. Seltzer, HEAO-B ACDS Review Team, MSFC

ITEM NO.	PAGE	PARAGRAPH	LINE *	COMMENT (Exact wording of recommended change must be given)
15	2-9	1	2	Question. What is the TRW rationale for not switching immediately to FSA instead of waiting for under voltage?
16	2-9	2.2	add	Describe LPL and when enabled so it all can be found at one location in documents.
17	2-10	--	--	On this and all other such blank pages, the comment "INTENTIONALLY LEFT BLANK" should be placed. Otherwise the recipient might suspect a printing error.
18	2-11	2.3		When do we find out if the component specs are met? In several places TRW suggests need for more tests, (Example: App. E, memo HEAO-76-460-178, page 31).
19	2-12			To what do the four asterisks refer?
20	2-12			RW weight is 30.5 pounds instead of 29.5.
21	2-15	5.3.4.2	7	RGA assembly arrangement picture is incorrect. This item was wrong in the PDR; we recommended at that time that it be corrected; this has not been accomplished and is still incorrect!
22	2-15			Spec is stated incorrectly.
22a				Drift Characteristics: g-insensitive value should be 5.0°/HR instead of 3.0°/HR.
22b				Voltage Sensitivity: g-insensitive value should be 0.01°/HR/VOLT.
22c				Magnetic Field Sensitivity: g-insensitive value should be 0.2°/HR MAX.
23	2-21	--	--	RW weight is 30.5 pounds instead of 29.5.
24	2-21			o Motor Torque: 17.0 in-oz. This is the number we have recommended be standardized in the CEI and ACDS specs. However, it is not the value used in a number of recent TRW memos.
25	2-21			o Tachmeter Output: This value is misleading and might lead the reader to assume a D.C. value, rather than pulses, as the output.
26	2-22	--	--	Direction of arrow between Switching Regulator and Pulse Width Modulator should be reversed.

* Reference to line number within the paragraph or subparagraph.

MSFC-Form 1908 (August 1968)

RECORD OF COMMENTS ON PUBLICATIONS

DATE: October 4, 1976

SUBJECT: HEAO-B ACDS CDR (26000-460-042, 19 October 1976)

REVISION NOTES FROM: S. M. Seltzer, HEAO-B ACDS Review Team, MSFC

ITEM NO.	PAGE	PARAGRAPH	LINE *	COMMENT (Exact wording of recommended change must be given)
27	3-1	3	3	Should include all current SCN's (SCN 15?) instead of stopping at SCN 7.
28	3-2.3			Define probability as it applies in each requirement. Make it a useful quantity. Insert an example.
29	3-3			Define jitter per ECR submitted by the Pointing Control Systems Branch (ED12), MSFC.
30	3-3	3.1.1.2.5	2.4	What is significance of two probability values and how is each verified?
31	3-3			Add a subparagraph 3.1.1.1.2 - Performance Point Mode: Sun line within 15° of S/C z-axis. The zx plane shall be within ± 1° of the sun line.
32	3-4	...3.2.2		Update Venting per SCN 9, the experiment venting gases total angular momentum < 500 ft-lb-sec, instead of TBD.
33	3-4	...3.2.3		Update per SCN 14, separation rates, x- 1.1°/sec,axes perpendicular to x- 1.5°/sec.
34	3-4	...3.2.4		Change the value 150,000 gauss cm^3 to correct one (see recommended spec changes from Review Team).
35	3-4	...3.2.6		Does "Provided;" refer to "no single point failures?"
36.	3-5	...5.8.2		Flight Program: Insert comma: "...mode control, not used..."
37	3-5	...5.8.2		Flight Program: Define "emergency" mode as FSA mode.
38	3-5	--	--	Power: Put a numerical value in rather than "TBD."
39	3-6	--	--	SCN summary should include at least SCNs 1-15 or later as appropriate.
40	4-1	4.2	last	Question: Was ACDS changed to incorporate automatic initiation of NSA at separation?
41	4-2,-3			Where omitted (such as in Action Items 6 and 7), summarize the responses to each Action Item.
42	5-3	Fig. 5-1	--	How does one get from Mode F-1 to Mode 0 (off)? Which modes are impossible to get to from which other modes? Identify what dashed lines signify.

* Reference to line number within the paragraph or subparagraph.

MSFC - Form 1905 (August 1968)

RECORD OF COMMENTS ON PUBLICATIONS

DATE: October 4, 1976

SUBJECT: HEAO-B ACDS CDR (26000-460-042, 19 October 1976)

REVISION NOTES FROM: S. M. Seltzer, HEAO-B ACDS Review Team, MSFC

ITEM NO.	PAGE	PARAGRAPH	LINE *	COMMENT (Exact wording of recommended change must be given)
43	5-4	Mode 0	2	Question: What telemetry is received in Mode 0? Is FSA on or off in Mode 0 (off)? Are there substates of Mode 0?
44	5-5	Mode 4	6	Question: What determines the 64 second implementation? Will this update have to be more often if rate gyros drift more than allowed by spec?
45	5-9	5.3.1.1		Some items are not compatible with similar items in the Mission Control Procedures (correct title?) TRW MP-04S.
46	5-8	Table 5-2		In the last para. of p. 5-7, three commands are identified as critical. They should be so identified on Table 5-2.
47	5-10	5.3.2		Same comment as Item 45 above (Example: "TA-A First Mode Leave "in this document is identified as "TA-B..." in MP-04S; the latter probably is correct).
48	5-13			The sentence "The wheels are then run to 2000 RPM and the maneuver begins" should read "The wheels are accelerated and the maneuver begins."
49	5-24	--	--	Figure 5-9 should indicate interface between OPE and RGA's.
50	6-4	6.2.1		Recommend change in procedure to allow for RG calibration before beginning the scan for ground attitude determination and setting the NSA scan rate as high as possible (in real time).
51	6-8		Add	Discussion on NSA capability vs requirements. Include both rate and attitude initial conditions.
52	6-20	Table 6-4		Reconcile gains in table 6-4 with those in App. E, memo HEAO-76-460-175, p.2. Reconcile difference of maximum rate gain (15) of same memo and Flight Program Requirements Document D01137 (500).
53	6-21	6.3.2.1		Discuss resolution of problem of not meeting "Absolute pointing accuracy" when guide stars are separated by less than 1.8 degrees.

* Reference to line number within the paragraph or subparagraph.

MSFC - Form 1968 (August 1968)

RECORD OF COMMENTS ON PUBLICATIONS

DATE: October 4, 1976

SUBJECT: HEAO-B ACDS CDR (26000-460-042, 19 October 1976)

REVISION NOTES FROM: S. M. Seltzer, HEAO-B ACDS Review Team, MSFC

ITEM NO.	PAGE	PARAGRAPH	LINE*	COMMENT (Exact wording of recommended change must be given)
54	6-28	6.3.2.1		Describe the sloshing and structural interaction simulations that have not been released. (See App. E, memo -178, p. 31, which says additional modelling of slosh is recommended. Memo also shows marginal stability for variations considered and says additional testing of RWEA is required, p.20).
55	6-42	6.4.2.1		Summarize numerically the requirements for separation rates and attitude initial conditions along with the capabilities.
56	13-7			Provide detailed HEAO-B ACDS subsystem test plans (describe all test cases planned).
57	14-1	14.2	10-16	There is no problem with the system momentum test no matter what initial momentum the maneuver was started from.
58	14.2	14.4		Since the momentum at maximum FPTA speed is only slightly more than 1 ft-lb-sec there is no problem.
59	App. B	Software Documentation		D-1137 of 21 June 1976 should be referenced, rather than 12 January 1976.
60				General Comments 1. The earth magnetic field is modeled as a tilted dipole (HEAO-74-460-084) with the justification that magnetic torques are small with respect to the gravity gradient torques. Since the recognition of a 4π error in the magnetic torque model this assessment may not be true any more and a more accurate model of the earth magnetic field may be necessary.
61				2. Describe planned activity and schedule for resolving effect on ACDS of telescope to spacecraft isolators.
62				3. In the Appendices: Portions of the TRW memos are obsolete and hence incorrect. These obsolete passages should be identified.
63				4. The first time the period for one revolution of the RW is mentioned, the magnitude should be described as well as the fact that the direction of revolution is identified.

* Reference to line number within the paragraph or subparagraph.

MSFC - Form 1968 (August 1968)

RECORD OF COMMENTS ON PUBLICATIONS

DATE: October 4, 1976

SUBJECT: HEAO-B ACDS CDR (26000-460-042, 19 October 1976)

REVISION NOTES FROM: S. M. Seltzer, HEAO-B ACDS Review Team, MSFC

ITEM NO.	PAGE	PARAGRAPH	LINE *	COMMENT (Exact wording of recommended change must be given)
64	--	--	--	RCS command pulse width should be 0.040 sec, not 0.030 sec.
65	6-46	6.5	--	What is the projected life time for HEAO-B with 268 pounds of propellant, based upon RCS Qualification Test Data and latest ACDS simulations?
66	--	--	--	Initial acquisition requirement has not been complied with as stated under capability column. The documented supporting analysis has not been shown applicable.

* Reference to line number within the paragraph or subparagraph.

MSFC - Form 1888 (August 1968)

TRW COMMENTS 6,7 Oct 76

1. Agree that the glossary is incomplete. Intent was not to provide a complete listing but rather provide only top level terms.

2. Agree with wording as stated.

3. Intended spelling was "incipient".

4. Inputs to RGA's 5 & 6 should be same as others. Block diagram was intended as a top level representation of general signal flow, and not show details of wiring. Dashed lines should have been solid.

5. Proper RGA orientations are given in HEAO-76-460-213. Gyros 1 & 2 are correct as shown. The remaining axes are as follows: gyro 3 should be minus 4, gyro 4 should be minus 3, gyro 5 should be minus 6, and gyro 6 should be minus 5.

   The angle between the spacecraft y and z axes to the projection of a wheel in the y-z plane is typically 45°. Angle from +x axis to any wheel rotation axis is typically 70°.

6. The narrow angle ESSA sun aspect signals are additionally used for the "fine point" capability in Normal Sun Acquisition mode to reduce errors caused by earth albedo and null-offset. The narrow angle data is also used for sun sensor attitude reference updates.

7. A sincere effort was made to make this correction throughout the document. The oversight should be corrected as stated.

Encl 2

ORIGINAL PAGE IS OF POOR QUALITY

8. Corrections were made in DPA software to correct inversions resulting from the yellow book error. Other data has been checked in OCC requirements and verified on the HEAO-A spacecraft.

9. An SCN against HEAO-A is outstanding which includes this capability. A similar SCN should be filed for HEAO-B. The reason for the outstanding status of the SCN is reliability of the SCP use since such use may be a single point failure if inadvertently started early in the launch sequence.

10. The use of the word "point" in all three modes is confusing. We agree with the recommendation of the MSFC HEAO-B ACDS Review Team to change the wording of the CEI.

11. True.

12. The ± 1° constraint is an operational constraint only to limit the required scope of thermal analyses. This constraint is not a requirement on ACDS and has no impact on the ACDS design.

13. True. The third bullet on page 2-8 should read as follows: "Automatic updating of the attitude reference using on-board star tracker data in pre-distorted coordinates".

14. Changes in star tracker operating characteristics must be assessed on an item by item basis to determine impact (if any) on flight software. Calibration corrections are now done on the ground and therefore do not impact flight software. Impact on ground software cannot be assessed by ACDS since this is a GSFC responsibility.

ORIGINAL PAGE IS
OF POOR QUALITY

15. The TRW rationale for not switching to the FSA is based on many factors including the following:

- FSA is considered a last resort that is used only for survival of the spacecraft. The most important measure of survival is the availability of power to maintain communication with the observatory.

- A completely redundant control system exists that permits normal control to be used to correct for the first failure. This system is very efficient in fuel utilization thereby maximizes the scientific life of the observatory.

- The duration of life in the tumbling condition is about 5 hours with no sunlight on the solar array and in the essential power only state. However, it is likely that in tumbling sunlight will periodically impinge on the array and extend this time perhaps indefinitely. Experience with other spacecraft has shown this extension to be real.

- Power availability even without periodic sunlight on the array is adequate for the ground to detect the tumbling condition and reconfigure to normal control.

- ACDS redundancy switchover is performed by ground command after ground evaluation in accordance with CEI. Automatic reacquisition of the sun is performed only to ensure survival.

16. LPL hardware implementation is described in the Transfer Assembly spec (CEQ4-1100) and has been provided in previous data package as it is common to all HEAO's. Some additional descriptive data is also presented on pg 5-37 and following. The current recommendations for LPL disabling based upon ACDS analyses are:

1) during a sun acquisition in NSA until sun point is achieved.
2) during eclipse exit in NSA
3) during RCS maneuvers in Celestial Point

17. agree

18. Certificates of Qualification packages will exist for all components. MSFC to provide the schedule for these based upon current plans.

19. Should have been deleted.

20. Actual weight of RW has been 29.5 measured. Could use ~~xxxx~~ deleted in #19 to indicate which weights in tables are measured.

21. We'll get it right yet!

22. Spec values in tables have not tracked revisions and some changes are still in process.

23. 29.5 lbs is actual measured weight – 30.5 is spec value

24. 17 in-oz is not stated in CEI spec. This is an EQ spec value which was intended to establish a lower limit on the minimum torque at full command. The current RW design exceeds this requirement and the true data have been used in the design analyses.

25. Should be described as a pulse accumulation as it is not an analog signal

26. That is correct – arrows should be reversed.

ORIGINAL PAGE IS
OF POOR QUALITY

27. Content of all SCN's has been considered in ACDS design when applicable. SCN summary will be updated for the CDR.

28. In general, the stated probability definition as used by ACDS is based on time. For example to not exceed 7.0 degrees pointing error with probability .997 implies that the error will exceed 7° no more than 0.3 % of the time while this requirement governs. However, in specific instances the worst case error has been used (without time averaging) in error analyses where it is conservative to do so. An example of the treatment of such an error is earth albedo.

29. Had not seen stated ECR until today's meeting, 4 October 1976. ACDS has received a copy of the ECR but cannot respond until the ECR is approved.

30. The two probability values given are consistant with an assumption of a Rayleigh Distribution. TRW will supply references.

31. Explanation of the operational contraint as given in item 12 should answer this question. However the 15° constraint of the spacecraft Z axis to the sunline and the ± 1° constraint of the ZX plane are not requirements on ACDS and should not be included in the ACDS requirements vs capabilities.

32. Venting impact has been considered. All applicable SCN's will be included in data presented at the CDR.

33. These values have been used in the design analyses. The correction to include this SCN will be made at the CDR

34. MSFC is to specify the experiment allocation requirements and submit to TRW who will then prepare the appropriate SCN

35. Yes - provided refers to both items, the last phrase indicates an additional on-board function which is also implemented

36. This change is OK

37. These words are from the CEI spec and "emergency" should be defined therein if used. Considered an MSFC action to resolve

38. The allocation is equal to the capability for all subsystems since contingency is maintained at the spacecraft level. The correct number for power requirement is 201 watts, mean over worst orbit for the 2 maneuver per orbit case.

39. All applicable SCN's will be included at CDR.

40. The capability to start the SCP with an event trigger has been incorporated in the design. The event trigger will occur on the "array safe" command which occurs some seconds before separation. Entry to N.S.1 is timed in the SCP to occur minutes after separation, not at separation as stated.

41. Action item responses are included in PDR closeout document which is available from Bob Wolf (MSFC).

42. Mode 0 entry is shown at top of page "from all states & conditions". Impossible paths are as shown by their specific omission. Dashed lines imply that both modes can occur simultaneously.

43. Telemetry in off mode is shown on page 8-21 from each DHA. FSA is powered at all times and is entered independently of off mode. Mode 0 (off) has no substates.

ORIGINAL PAGE IS
OF POOR QUALITY

44. 64 sec interval was based upon analysis done early to establish scaling requirements for software. Current estimates of pointing stability show considerable margin with current gyro performance so would not expect a change to be required unless a radical change to gyro performance is identified.

45. All procedures which are A & B common should be the same. This should be reflected in latest issue of MP-045. The latest issue is very recent and may not be in MSFC hands yet.

46. These commands are identified in the OCC procedures but should probably also be identified in Table 5-2. Will work this out at CDR presentation.

47. As in #45 appears that latest issue of MP-045 should be consulted as it reflects this correction.

48. Comment as amended is a better phrasing of condition.

49. Figure was not intended to be a comprehensive signal diagram but only to show cross-strapping topology

50. Current estimate of gyro drift uncertainty initially on-orbit is 0.6 deg/hr (3σ). Scan rate command is ground modifiable and therefore can be increased in real time if necessary. These characteristics allow star identification as in HEAO-A and should not necessitate a change to the ground operations.

51. Requirements document is referenced as HEAO-75-460-217 in descriptions but is not in data package as it was included in a previous one. Might be beneficial to replicate summary figures. No constraint exists on attitude initial conditions of sun acquisition

52. Data reflect evolution of design. Both sets have been superseded by material delivered as data addendum. Minimum rate gain during maneuvers is ≈500 - not 15.

53. The two 60 arcsec uncertainty values for star tracker to reference cube alignment have been reduced to a total of 10 arcsec (3σ) by pending agreement with MSFC. This reduction allows compliance with requirements under all guide star separations. It is anticipated that the updated data on pointing will be presented at the CDR. The 60 arcsec data was that provided at the time of data package preparation and only recently modified.

54. Several memos on subject delivered at meeting including:
1) one on results of slosh and bending interaction on pointing performance
2) one on updated celestial point linear stability analysis
3) test results and model documents on RWCA & RWA which show additional testing
4) celestial point linear stability and performance updates

additional work in progress on assessing slosh parameters (damping and frequency) by TRW Dynamics. These results will be made available to MSFC.

55. Comments similar to those for question 51 apply but this is applicable to the FSA mode requirements.

56. Selection of detailed test cases for subsystem test has been planned to occur after the CDR. Data will be provided.

ORIGINAL PAGE IS
OF POOR QUALITY

57. Current momentum threshold is 10 ft-lb-sec. Comment was that this is below the wheel momentum envelope and thus could be increased to allow maneuver from nonzero wheel initial state. Considerations of FSA recovery also enter into establishing this value. The rationale for the current value will be reviewed by TRW and the findings will be coordinated with MSFC.

58. At date package publication the ASTC provided value was very large and has been only recently reduced to the level indicated. This lower value should be OK. Concern still exists for the effects of the starting & stopping torque pulses on transient response from the wheel control loops. Since this is about the X axis no severe constraint on pointing exists.

59. Should have used later date.

60. MSFC is to work allocation of magnetic moment to supplier and supply to TRW. It is anticipated that these will be such that the current 150K gauss-cu³ requirement can be relaxed to 20-50K. This would again make the magnetic disturbances of second order. No plans for a magnetic model reassessment exist currently.

61. TRW has done no work on the nonlinear effects of the isolator stiffness and no plans are know to pursue this. Effects of thermal deformation and creep due to isolators have been assessed and are being included in the ACDS maneuver accuracy analyses.

62. Recognize the concern but neither TRW nor MSFC have a practical way to resolve this at this time.

63. Withdrawn by Kennel

64. TRW (Todosiew) to resolve 30 vs 40 msec minimum pulse-width for RCS as it appears as a descrepancy between the RCS and ACDS interfaces.

APPENDIX G

HOFFMAN, D. P., "HEAO ATTITUDE CONTROL SUBSYSTEM – A MULTIMODE/MULTIMISSION DESIGN," AIAA PAPER 76-1925, AIAA 1976 GUIDANCE AND CONTROL CONFERENCE, SAN DIEGO, CALIFORNIA, AUGUST 1976

This technical paper has been printed with permission of the AIAA.

76-1925

HEAO ATTITUDE CONTROL SUBSYSTEM--A MULTIMODE/MULTIMISSION DESIGN**

D. P. Hoffman*
TRW Defense and Space Systems Group
Redondo Beach, California

Abstract

The initial three satellites in the High Energy Astronomy Observatory (HEAO) series are in the final development stages with the first launch to be in April 1977. The overall program design concept stressed cost reduction through use of hardware standardization for the three configurations and missions. The Attitude Control and Determination Subsystem (ACDS) developed for HEAO was able to achieve significant design commonality in both hardware and software in an implementation which satisfied the performance requirements of the different missions. The ACDS thus provides an example of a multimode/multimission design which should soon be operational.

I. Introduction

The preliminary design studies of the High Energy Astronomy Observatory (HEAO) family of satellites were performed in 1969-71. TRW was awarded the hardware development and integration contract for two observatories in 1972. The payload for each of the two consisted of groups of 7-8 scientific experiments capable of detecting, locating, and characterizing high energy x-ray, γ-ray, and cosmic ray celestial sources. The HEAO development effort was redirected to a preliminary design phase in 1973 with a goal of reducing total program costs. Three smaller observatory designs with fewer (3-5) experiments in each payload and a set of reconfigured spacecraft subsystems resulted from the redefinition activities. In July 1974 a hardware go-ahead was again authorized for the three redefined satellites. The launch date for the first observatory in the restructured program (HEAO-A) is April 1977. The succeeding two observatories (HEAO-B and C) are to be launched in 1978 and 79. This paper describes the Attitude Control and Determination Subsystem (ACDS) which evolved from the redesign studies and which is now in the final stages of development.

The ACDS design concept considered: mission/experiment imposed requirements, component commonality among the three observatory configurations, development costs, and accommodation of follow-on payloads and missions. To indicate how these aspects influenced the implementation, the experiment payloads and their associated mission performance requirements are described. These are followed by summaries of the characteristics of the three observatory configurations. Within this systems-level background, the descriptions of the ACDS are then developed starting with an overview of the subsystem design rationale indicating how the above considerations were treated. The attitude control mode structure is described and related to the mission requirements. The use of modularization in the flight software and the resultant benefits realized in the ACDS are noted. The final subsections provide additional detail on the attitude reference and attitude control modes in the form of block diagrams and performance summaries.

A final section is included in the descriptions to indicate the types of follow-on studies currently in progress. These include assessments of the applicability of the HEAO concept to advanced payloads and operational requirements reflecting the transition to the Space Shuttle era.

II. General Characteristics

The science payloads of each of the three initial HEAO missions are summarized in Tables 1 through 3. The A and B payloads contain x-ray

Table 1. HEAO-A Experiments

NUMBER AND TITLE	PRINCIPAL INVESTIGATOR SCIENTIST AND INSTITUTION	SCIENTIFIC OBJECTIVES
A-1 LARGE AREA X-RAY SURVEY EXPERIMENT	[illegible]	[illegible]
A-2 COSMIC X-RAY EXPERIMENT	[illegible]	[illegible]
A-3 STANDING MODULATION FOR EMISSION EXPERIMENT	[illegible]	[illegible]
A-4 HARD X-RAY AND HIGH ENERGY GAMMA RAY INSTRUMENT	[illegible]	[illegible]

experiments while the HEAO-C payload consists of γ-ray experiments. The characteristics of each mission are shown in Table 4. All of the three mission orbits have low altitudes and relatively low inclinations due to the desire of the experimenters to minimize the duration of instrument exposure to the South Atlantic Anomaly (SAA) trapped radiation region. The orbits were selected to be compatible with the use of the Atlas-Centaur as the launch vehicle and to have orbital decay characteristics which would provide satisfactory mission lifetimes. The experiments of the A and C payloads require a scanning mode of operation to achieve the science objective of a full sky survey. A complete celestial map is obtained by providing

Table 2. HEAO-B Experiments

NUMBER AND TITLE	PRINCIPAL INVESTIGATOR SCIENTIST AND INSTITUTION	SCIENTIFIC OBJECTIVES
B-1 MONITOR PROPORTIONAL COUNTER (MPC)	DR. R. GIACCONI SMITHSONIAN ASTROPHYSICAL OBSERVATORY	[illegible]
B-2 HIGH RESOLUTION IMAGER (HRI)	DR. R. GIACCONI SMITHSONIAN ASTROPHYSICAL OBSERVATORY	[illegible]
B-3 FOCAL PLANE CRYSTAL SPECTROMETER (FPCS)	DR. G. W. CLARK MASSACHUSETTS INSTITUTE OF TECHNOLOGY	[illegible]
B-4 IMAGING PROPORTIONAL COUNTER (IPC)	DR. H. GURSKY SMITHSONIAN ASTROPHYSICAL OBSERVATORY	[illegible]
B-5 SOLID STATE SPECTROMETER (SSS)	DR. F. BOLDT GODDARD SPACE FLIGHT CENTER	NONDISPERSIVE X-RAY SPECTRA FROM 0.5 TO 4 KEV WITH VERY HIGH RESOLUTION TO MEASURE BROADENED LINES AND CONTINUA

NOTE: TOTAL WAVELENGTH RANGE COVERED IS 1 TO 62 Å FOR B-2 THROUGH B-5 AND 1.24 TO 62 Å FOR B-1

* Section Head, Control and Sensor Systems Laboratory, Associate Fellow AIAA

** Work sponsored by NASA/MSFC under contract NAS8-28300

ORIGINAL PAGE IS
OF POOR QUALITY

Table 3. HEAO-C Experiments

[illegible] AND TITLE	PRINCIPAL INVESTIGATOR/ SCIENTIFIC AND INSTITUTION	SCIENTIFIC OBJECTIVES
C-1 [illegible] SPECTRAL [illegible] GAMMA RAY SPECTROMETER	DR. A.S. JACOBSON JET PROPULSION LABORATORY	EXPLORE FOR DIFFUSE AND DISCRETE SOURCES AND X-RAY LINE EMISSIONS FROM 0.1 TO 10 MeV
C-2 ISOTOPIC COMPOSITION OF PRIMARY COSMIC RAYS EXPERIMENT	DR. B. PETERS DANISH SPACE RESEARCH INSTITUTE, COPENHAGEN DR. L. KOCH CENTER FOR NUCLEAR STUDIES SACLAY, FRANCE	MEASURE ISOTOPIC COMPOSITION OF PRIMARY COSMIC RAYS WITH ATOMIC NUMBER Z IN RANGE OF [illegible] TO 26 [illegible] AND IN MOMENTUM RANGE FROM 2.25 GeV/c/NUCLEON
C-3 HEAVY NUCLEI EXPERIMENT	PROF. M. ISRAEL WASHINGTON UNIVERSITY PROF. E. STONE CALIF INSTITUTE OF TECH PROF. C. J. WADDINGTON MINNESOTA UNIVERSITY	MEASURE ELEMENTAL COMPOSITION AND ENERGY SPECTRA OF HIGH ATOMIC NUMBER (Z > 30) NUCLEI WITH SUFFICIENT RESOLUTION TO DETERMINE ABUNDANCE OF INDIVIDUAL ELEMENTS FROM ARGON THROUGH URANIUM

a controlled scan of the observatory body about the sunline for a period of six months. The HEAO-A experiments are capable of obtaining science data when operating in a celestial pointing mode and, therefore, the capability for periodic operation in this mode is also noted. The HEAO-B experiments are all configured to operate in a celestial point mode. Celestial targets for pointing are selected based upon scientific interest. The attitude control performance requirements for the three missions are seen to be similar for A and C but significantly more stringent for B. The same is true for the post facto attitude determination requirements. These differences in performance will be shown to be effectively accommodated in the ACDS design by use of hardware and software modularization to enhance commonality and reduce costs.

Table 4. Mission Descriptions

	OBSERVATORY CONFIGURATION		
	HEAO-A	HEAO-B	HEAO-C
LAUNCH DATE/MISSION LITE	APR 2776 MONTHS	JUN 78/12 MONTHS	2976 MONTHS
MISSION CHARACTERISTICS	CELESTIAL SCANNING WITH PERIODIC CELESTIAL POINTING	CELESTIAL POINTING AND TARGET-TO-TARGET MANEUVERING	CELESTIAL SCANNING
ORBIT (INCL/ALT)	22.75°/200-220 NM	22.75°/235-200 NM	45°/220-200 NM
POINTING ACCURACY	1.0° HALF CONE (0.997 PROB)	60 SEC HALF CONE (0.67 PROB) 30 SEC STABILITY	1.0° HALF CONE (0.997 PROB)
LIMIT CYCLE RATE/JITTER	0.01 DEG/SEC	1.0 SEC IN 1 SEC (0.67 PROB)	0.01 DEG/SEC
ATTITUDE DETERMINATION	0.1° (3σ) EACH AXIS	60 SEC (1σ) EACH AXIS	0.1° (3σ) EACH AXIS

The sequence of events from launch to normal on-orbit operation is depicted in Figure 1. The sequence is nominally the same for all three missions although the normal operating mode for HEAO-A and C is celestial scanning while that of B is celestial pointing. The Centaur provides direct injection into the final orbit and three axis stabilized control of the observatory prior to separation. The requirement for roll orientation of the observatory during the final phases of ascent is dictated by the desire to minimize exposure of certain of the experiments to sunlight. Following separation, the observatory damps the separation transients and orients the solar arrays toward the sun. A controlled scan rate about the sunline is then initiated. The observatory equipment is checked out and experiments activated in the following several days. Completion of activation results in transfer of each observatory into the respective normal operational mode.

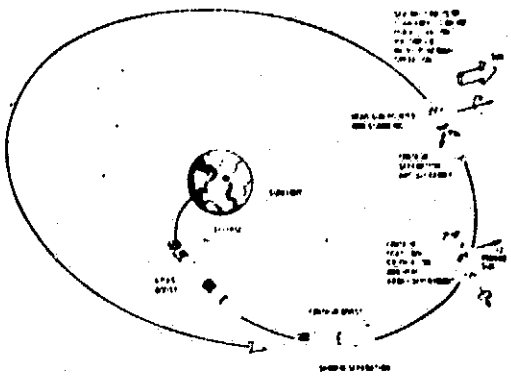

Figure 1. Mission Sequence

Configuration Descriptions

The program design concept for the HEAO configuration is shown pictorially in Figure 2. The observatory structural design is subdivided into two modules. The SEM (Spacecraft Equipment Module) is configured to be common to all three configurations. The EM (Experiment Module) is configured to be mission unique. This allows accommodation of the wide variations in the experiment physical characteristics while maintaining a degree of commonality in the spacecraft bus. This design concept was strongly influenced by cost considerations. It has been found to be very effective and is now being exploited in applications studies of follow-on payloads.

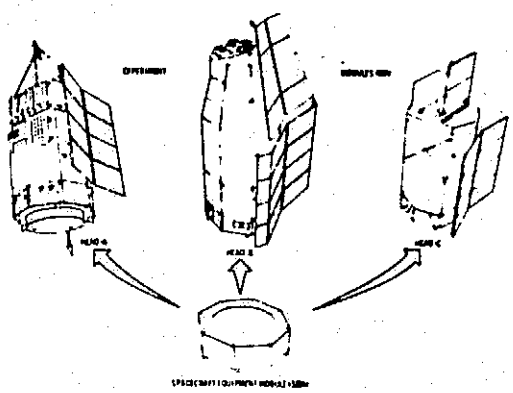

Figure 2. Configuration Tree

The more detailed characteristics of each of the three observatory configurations are shown in Figures 3 through 5. The four HEAO-A experiments are seen from Figure 3 to view along the +Y and -Y body axes. The experiment designations A-1 through A-4 are as defined in Table 1. The body axis which is maintained solar oriented is +Z. The body fixed solar array panels are approximately normal to the Z axis to maximize conversion efficiency. The cant of the main array panels is for thermal reasons but it also allows a limited degree of off-sun pointing without significant loss of power. The physical characteristics of the configuration and certain design features of the other subsystems are listed on the figure. Locations of the experiments within the EM are also shown.

ORIGINAL PAGE IS
OF POOR QUALITY

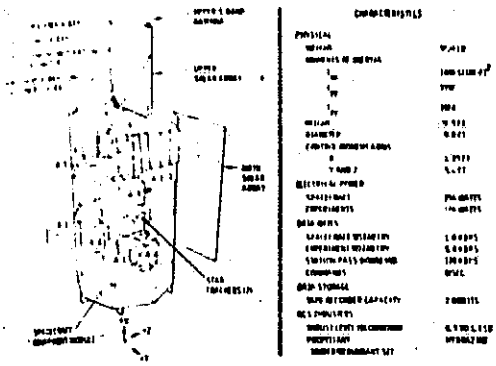

Figure 3. HEAO-A Configuration

The HEAO-B experiment configuration is shown in Figure 4. Experiments B-2 through B-5 (see Table 2) are mounted on a rotating platform. This platform has four indexed positions, each of which place one of the experiments at the focal point of the high resolution telescope (HRT). Thus, only one of these four experiments can gather data at any one time. The B-1 experiment does not rely upon the HRT and thus is nominally gathering data at all times. The optical axis of the HRT is along the +X body axis. The main solar array panels of the A configuration are augmented in B by additional array area added along the outer edges and canted back in a gull-wing fashion. The upper array of B also differs from the A and C configurations due to the conical shape of the upper portion of the EM on B. Summaries of the physical characteristics of the B configuration and other subsystems are also tabulated in Figure 4. The normal mode of operation for HEAO-B is to point the HRT toward a celestial target of interest and dwell on the target for an extended period. The target orientations are selected so that the solar arrays are maintained near the sunline as with HEAO-A.

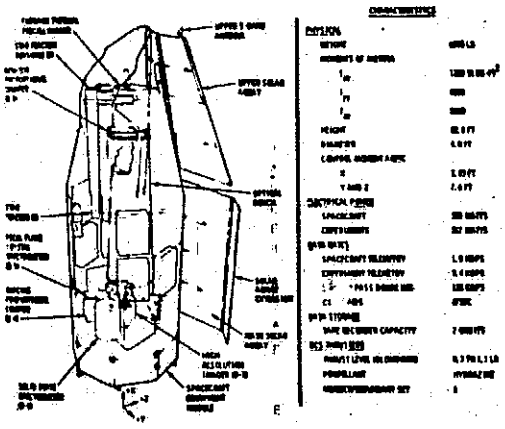

Figure 4. HEAO-B Configuration

The HEAO-C layout as depicted in Figure 5 has experiments viewing along the Y axis as did HEAO-A. The solar array configuration is also similar to A. Rotation about the Z axis while maintaining +Z solar oriented is also the normal mode of on-orbit operation for HEAO-C.

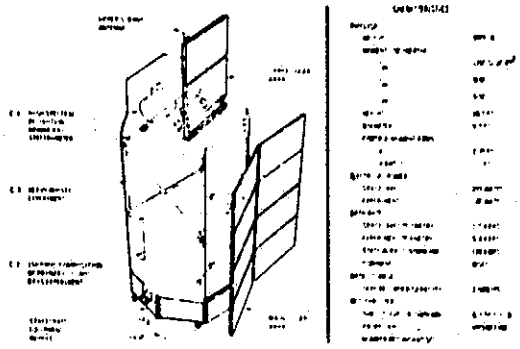

Figure 5. HEAO-C Configuration

III. ACDS Description

Design Rationale and Equipment Descriptions

The payload, mission, and configuration of each of the three observatories have been shown to exhibit similarities and distinct differences. The goal of the ACDS was to implement a design which would capitalize on the similarities and minimize the impact of the differences. The functions allocated to the ACDS in the observatory design were attitude control and post facto attitude determination. The latter was to be accomplished by ground processing of the data derived from onboard equipment. This aspect of the design will not be discussed in this paper although allusions will be made as to the functions performed. To enhance operational autonomy, all attitude control functions were to be implemented with onboard equipment. The spacecraft equipment was to be located in the SEM to the extent possible for compatibility with the common bus concept.

The attitude control requirements derived from the payload objectives emphasized a stellar-inertial frame as an attitude reference. This lead to the incorporation of an onboard inertial attitude reference in the ACDS design. A strapdown configuration of precision gyros was established as the primary sensors for the attitude reference. The solar arrays in all three configurations are body fixed requiring sun pointed attitude control. Sun sensors were included to provide solar referenced attitude sensing. The requirement for accurate three axis post facto attitude determination and precision on-orbit pointing of HEAO-B dictated that star trackers also be used as inertial attitude sensors. The payloads on HEAO-A (A-3 experiment) and HEAO-B included star trackers in their designs. To minimize program costs, it was decided early in the system design definitions to allocate the star tracker sensing function on the A and B configurations to the respective experiment units in lieu of replicating them in the ACDS. As none of the HEAO-C experiments contained star trackers, these sensors were incorporated as part of the ACDS equipment in that configuration.

The attitude control accuracy requirements and mission lifetimes for HEAO-A and C were compatible with use of reaction control thrusters for actuation. The pointing requirements for HEAO-B, however, coupled with the one year mission duration and operation in a low earth orbit disturbance environment, could not effectively be satisfied with

thruster actuation. Reaction wheels were selected for control torquing and momentum storage in the HEAO-B configuration. The Reaction Control Subsystem (RCS) of the A and C configurations was retained in B, however, to preserve commonality in the other ACDS operating modes and as a means for periodic unloading of the stored momentum in the reaction wheels.

Selection of the sensing and actuation hardware concepts for the three observatory configurations was relatively straightforward. Selection of the most effective means of implementing the computational, logic, command and telemetry interfacing, and sensor/actuation interfacing functions was not so clear cut. The multimission design requirement, ACDS mode structure, attitude reference functions, computational accuracy requirements, development costs, size, weight, and power considerations lead to the selection of a general purpose digital computer in lieu of special purpose dedicated electronics for this implementation. The computer was augmented with an interface assembly which performed signal conditioning, input, output, and miscellaneous peripheral functions.

The hardware block diagram of the ACDS is shown in Figure 6. The key features of each assembly are summarized in the respective blocks. The equipment lists by observatory configuration are shown in Table 5. The primary interfacing unit in the subsystem design can be seen from the block diagram to be the Transfer Assembly (TA). By defining the interface requirements for the equipment in all three of the observatory configurations at the onset of the ACDS development, a common TA design was synthesized. Configuration peculiar requirements were then accommodated in this concept by interconnect cabling and flight program software differences. This overall subsystem design definition resulted in each hardware assembly being of a single standard design with the observatory configuration dictating its presence or absence in the equipment complement. Electrical design, manufacturing, and qualification costs were thereby reduced.

Table 5. ACDS Equipment Lists

HARDWARE ASSEMBLY	QUANTITY PER OBSERVATORY		
	HEAO A	HEAO B	HEAO C
Y SUN SENSOR ASSEMBLY (YSSA)	2 (EACH INTERNALLY REDUNDANT)	2 (EACH INTERNALLY REDUNDANT)	2 (EACH INTERNALLY REDUNDANT)
Z SUN SENSOR ASSEMBLY (ZSSA)	1 (INTERNALLY REDUNDANT)	1 (INTERNALLY REDUNDANT)	1 (INTERNALLY REDUNDANT)
TRANSFER ASSEMBLY (TA)	2	2	2
DIGITAL PROCESSOR ASSEMBLY (DPA)	2	2	2
BIRRINGE GYRO ASSEMBLY (RGA)	2 (2 CHANNELS EACH)	3 (2 CHANNELS EACH)	2 (2 CHANNELS EACH)
REACTION WHEEL ELECTRONICS ASSEMBLY (RWEA)	-	4	-
REACTION WHEEL ASSEMBLY (RWA)		4	-
STAR TRACKER ASSEMBLY (STA)	2 (FROM A-3 EXPERIMENT UTILIZED)	3 (3 FROM EXPERIMENTS UTILIZED)	2

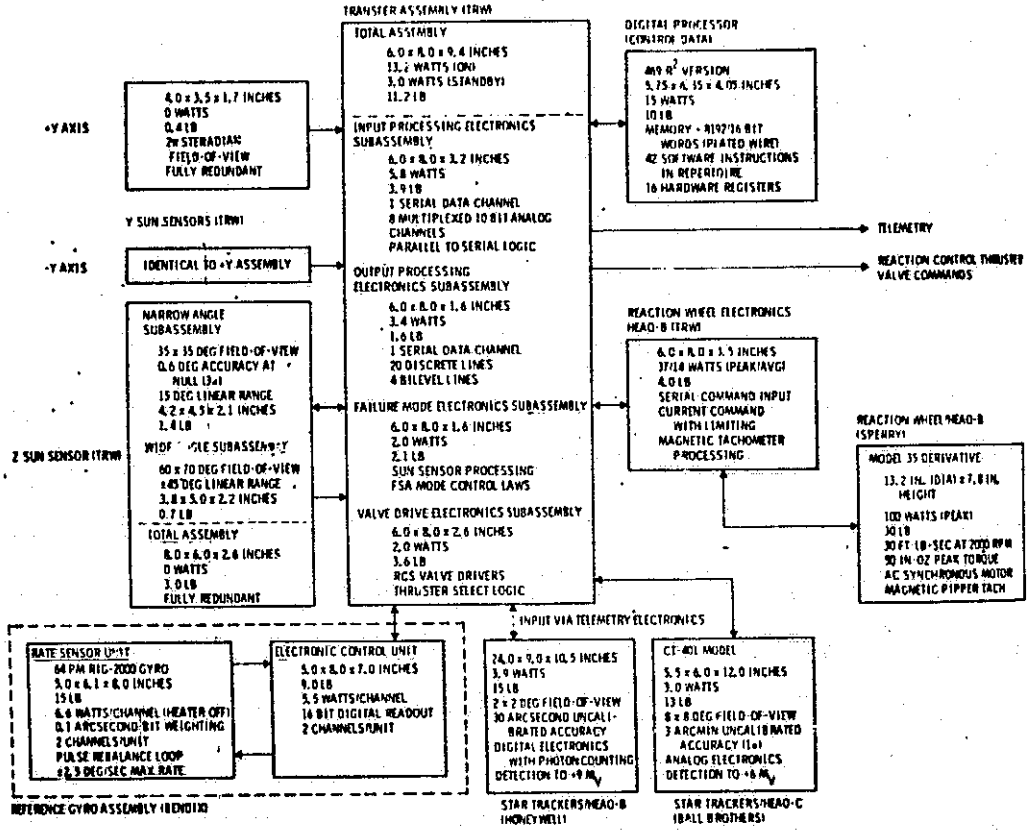

Figure 6. ACDS Equipment Summary and Block Diagram

The assembly redundancies shown in the equipment lists of Table 5 were dictated by the design requirement that no single point failure should result in a mission failure. In the case of HEAO-B, the redundancy of the Reference Gyro Assemblies (RGA) was increased for mission reliability reasons. A minimum of cross-strapping is present in the ACDS design--again resulting in implementation simplicity. In particular, no cross-strapping exists between the TA and Digital Processor Assemblies (DPA). Initial spacecraft level reliability tradeoffs showed that this cross-strapping could be deleted in favor of subsystem level cross-strapping with the data handling subsystem. This allowed the use of an existing DPA design which was then in the final phases of qualification. Use of this qualified design reduced development cost and risk. Redundancy management of the on-orbit equipment was defined early in the program to be a ground allocated function for all HEAO subsystems to minimize complexity.

The accommodation of the spacecraft equipment in the SEM is indicated in Figure 7. The sun sensor, TA, DPA, and two of the RGA locations are common in all three observatory configurations. The star trackers allocated to the A-3 experiment in HEAO-A have been previously shown in Figure 3. They are units similar to those used in the SAS-C program [1]. The third RGA, the RWEA, and the RWA units are located in vacant volumes existing in the SEM in the A configuration. These were provided by properly considering the equipment complements for all three configurations in the initial SEM layout and sizing. The experiment star trackers for HEAO-B have been shown in Figure 4 and are currently under development [2]. The HEAO-C layout is as in A with the addition of the two star trackers of the SAS-C design also. The trackers in this configuration use the volume provided by the deletion of the RWEA, RGA, and RWA units.

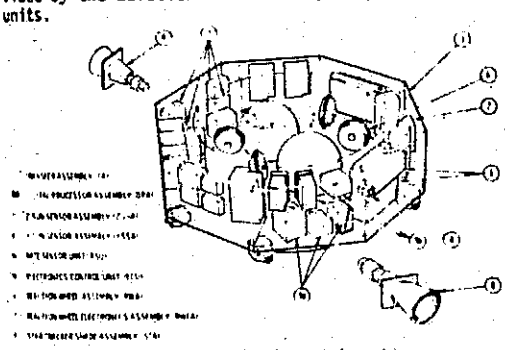

Figure 7. ACDS Equipment Locations

The geometrical arrangements of the gyros, reaction wheels, and reaction control thrusters are as follows:

gyros - Each Rate Sensor Unit (RSU) in a RGA contains two sensors whose input axes are coplaner but which are scissored plus and minus 58.28 degrees respectively from the normal to the mounting plane of the RSU. The RSU are mounted in orthogonal planes with respect to the body axes (see Figure 7) so that in the HEAO-B configuration of three RSU the six gyros form a dodecahedron. Any combination of three of the gyros will provide complete three axis sensing.

reaction wheels - The four reaction wheels are configured with their torque/momentum axes normal to the faces of a square base pyramid. The base of the pyramid is in the body YZ plane and the apex is toward +X. The base is skewed 45 degrees with respect to the body Y and Z axes. This orientation increases the momentum envelope along the Z axis which is the one about which most of the maneuvers are performed due to solar array pointing constraints. The tilt angle of the wheel axes out of the YZ plane is 20 degrees. Three axis control is available using any three of the four wheels.

reaction control thrusters - Six dual thruster modules located underneath the SEM as shown in Figure 7 provide torques about the three body axes. Six thrusters (one from each of the modules) are operated as a bank with the other six providing redundancy. Reconfiguration is by bank. Two of the six thrusters in a bank thrust along the ±Z axis and provide torque about the pitch (Y) axis. The remaining four thrust along the +Y axis and are used in combination to provide roll (X) and yaw (Z) torques. The RCS arrangement is common in all three observatory configurations.

Mode Structure

The definition of the normal operating mode structure of the ACDS evolved from the experiment requirements and mission event sequences. An additional mode of operation was dictated by a critical failure survivability requirement. The attitude control modes of the three HEAO configurations are shown in Table 6 correlated with equipment utilization. The Normal Sun Acquisition (NSA) mode provides a two-axis maneuver controller capable of orienting the observatory +Z axis toward the sun from any attitude. Control in the third axis (about Z) is a rate damping controller with a nonzero command bias. Once having acquired the sunline, the NSA mode maintains sun pointing even through eclipses. This mode is utilized for activation, initialization, and reinitialization phases to be discussed subsequently. The Celestial Scan (CS) and Celestial Point (CP) modes are the nominal long term operating modes for HEAO-A/C and HEAO-B, respectively. The CP mode has also been implemented in HEAO-A and C as an operational option.

Table 6. ACDS Operating Modes

CONTROL MODE	[illegible]	[illegible]	[illegible]
NORMAL SUN ACQUISITION (NSA)	[illegible]	[illegible]	[illegible]
CELESTIAL SCAN (CS)	[illegible]	[illegible]	[illegible]
CELESTIAL POINT (CP)	[illegible]	[illegible]	[illegible]
FIRST SUN ACQUISITION (FSA)	[illegible]	[illegible]	[illegible]

The above three modes are referred to as normal control modes as they have been configured to take maximum advantage of the available ACDS equipment. As noted previously, redundancy management and equipment reconfiguration are ground functions.

The low earth orbit of the HEAO missions and the ground station locations allocated to their operational support cause ground contact passes to be of duration 6-10 minutes and of frequency once per orbit or less. Thus, a major portion of the operating time is spent out of sight of the ground. This presents the possibility that power critical conditions could arise during these times as a result of equipment failures, and the ground would be unable to take timely action. To provide a survival capability in the event of reaching a power critical state, the First Sun Acquisition (FSA) mode has also been implemented in the ACDS. This mode provides a reduced capability for sun acquisition and sun point compared to that of the NSA mode but without use of the RGA or the DPA. The onboard hardware autonomously reconfigures itself to bypass the DPA and RGA units and switch to the redundant sun sensors and RCS thruster bank in the FSA mode. This equipment reconfiguration is initiated by an undervoltage signal from the Electrical Power Subsystem which is used to indicate an incipient power critical state. Reacquisition of the sun in the FSA mode follows the reconfiguration as a means of regaining electrical power. The FSA mode control laws and logic are implemented in dedicated electronics in the TA.

Substates of certain of the primary attitude control modes also exist in the ACDS design. These will be covered in the individual mode descriptions which follow. Before leaving the mode structure definitions, the nominal utilization sequence for normal operation is covered in Table 7. The mission phases described in the table can be correlated with the orbital events by reference to Figure 1. The FSA mode is used immediately following Centaur separation in lieu of the NSA mode. This allows the gyros to be OFF during ascent and separation while still providing positive attitude control following separation to minimize experiment sun exposure. The hand over from FSA to NSA modes is done prior to entry into the first orbital eclipse. The mode change allows gyro based attitude errors to be propagated through eclipse and thereby minimize sun exposure of the experiments at eclipse exit. NSA to CS or CP mode transition is made after initialization and checkout are complete. Normal operations are then initiated. Nominally the entire mission is conducted in the CP or CS modes. Interruption of the primary mission can result from operating equipment anomalies. In these events, sun reacquisitions can be performed via reversion to the NSA or FSA modes. Return to normal operation follows problem correction and reinitialization.

Table 7. Mode Sequence

MISSION PHASE	ACDS OPERATING MODE
BOOSTER ASCENT	GYROS OFF, REST OF EQUIPMENT POWERED BUT ACTUATION COMMANDS INHIBITED
CENTAUR/HEAO SEPARATION	FSA MODE ENTERED BASED UPON RECEIPT OF SEPARATION SIGNAL
PRIOR TO FIRST ORBITAL ECLIPSE	TRANSFER FROM FSA TO NSA BY GROUND OR STORED COMMAND
OBSERVATORY ACTIVATION AND CHECKOUT	NSA MODE WITH EARTH PROCESSING OF SENSOR DATA TO DEVELOP ATTITUDE REFERENCE INITIALIZATION DATA
SCIENTIFIC DATA TAKING	CS MODE WITH PERIODIC GROUND COMMANDED TARGET CHANGES TO TRACK SUNLINE CP MODE WITH TARGET CHANGES SCHEDULED BY GROUND TO PROVIDE VIEWING PROFILE
FAILURE RECOVERY	NSA OR FSA FOLLOWED BY NSA ENTRY TO EFFECT REINITIALIZATION AND RETURN TO DATA TAKING IN CS OR CP

ORIGINAL PAGE IS OF POOR QUALITY

Flight Program Design

A great deal of emphasis was placed on commonality in the hardware design. It was also employed in developing the design of the flight software. The software flight program resides in the DPA memory. The computational cycle for program execution is synchronized with the telemetry clock and has a frequency of once per 0.320 seconds. Sensors are read, computations performed, control commands output, and self tests executed each cycle with one exception to be noted. The functions allocated to the flight program are somewhat configuration dependent as indicated in the module listing of Table 8. The module titles describe the functions performed. Modularization of the flight program allowed a minimization of unique code as common modules could be developed once and then replicated as required in the three programs. This concept is indicated in the table. Although the total instructions required for the three programs is 12,540, only 6040 instructions were actually developed by virtue of the modularization employed. This has resulted in considerable cost and schedule payoff for the overall software development. It has also greatly facilitated software checkout and qualification.

Table 8. Software Modularization

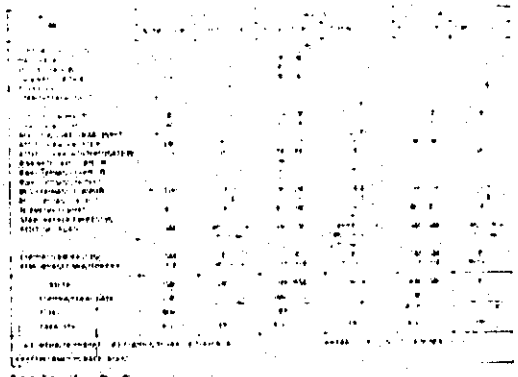

Attitude Reference

The onboard ACDS function has been divided into two parts, attitude reference and attitude control, in the subsequent descriptions. The two are interrelated but it is possible to indicate this interrelationship without undue confusion and the discussions can be developed somewhat easier by making the separation.

The attitude reference is depicted in block diagram form in Figure 8. The body-fixed integrating rate gyros provide continuous incremental attitude information which is sampled by the flight program each computational cycle. These outputs are converted to a gyro axis sensed rate, transformed into the body coordinate frame, and scale factor corrected to develop an estimate of sensed angular rate components in body axes. A correction is then made for the gyro drift rate. The gyro processing algorithms follow those developed in [1]. The rate estimates developed in the gyro processing module are used by the attitude controllers as the rate feedback and as the input to the strapdown equations for attitude propagation.

The attitude propagation algorithm also follows the development of [3] and assumes constant rates

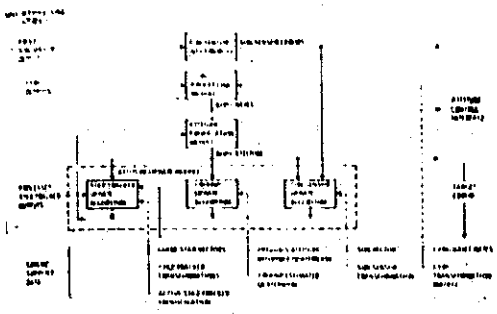

Figure 8. Attitude Reference Block Diagram

over the propagation interval to derive the transition matrix expression. The four parameter set of quaternions derived in the attitude propagation algorithm forms the onboard attitude reference estimate of the body-fixed coordinate frame with respect to an inertial coordinate frame. The inertial frame in all three HEAO configurations is the ECI (earth centered inertial) set. The body fixed set differs with configuration but in each case is defined to reflect an orthogonal set consistent with the pointing objectives of the experiments.

The gyro based portion of the attitude reference is augmented by three algorithms which allow update corrections to be made based upon independent celestial measurements. Updating based upon the post facto ground attitude determination solution is processed onboard by transitioning the ground estimate from the solution time to the current time. This is then used to replace the currently propagated quaternion. The algorithm uses the standard matrix operations for quaternion algebra. The ground update algorithm is common to all three flight programs.

The second attitude update algorithm which is also contained in all three software programs uses the measurements from the narrow angle detector of the Z sun sensor assembly (ZSSA). These pitch and roll sun sensor outputs provide celestial attitude information which is used to form a measurement residual based on the attitude reference estimate. This is multiplied by the pseudoinverse of the measurement matrix to compute an attitude correction which is then added to the current reference estimate to form the update.

The third attitude update algorithm utilizes star tracker measurements in real time and is unique to HEAO-B. On A and C the star tracker data are telemetered for ground processing. No processing of these data is done onboard. The precise pointing requirement of B dictated that autonomous updating using the star tracker data be implemented in the flight program. The algorithm development is an extension of that analyzed in [4] and, as in the sun sensor algorithm, the measurement residuals and the matrix pseudoinverse are used to compute the quaternion correction. In the case of the star tracker update, simultaneous measurements from two different stars are used to form the update. This allows a full three axis update to be performed each time the algorithm is executed.

The accuracy of the different attitude update algorithms is primarily dependent upon the sensor or ground supplied data. Onboard computational errors are maintained below 5-6 arcseconds in the ground and star tracker processing and below 0.1-0.2 degrees for the sun sensor processing. These accuracy requirement allocations limit the use of double precision to only those computations which must be rigidly constrained for performance reasons.

Typical performance of the attitude reference in Celestial Scan is shown in Figure 9. The figure shows the three attitude errors as a function of time. The time interval is three scan revolutions. These results are from simulations which incorporate sensing and computational error sources. The predominant error source is the gyro drift rate residual (the difference between the true value of drift and the ground derived estimate). This error gives rise to a coning motion of the scan axis pointing as analytically developed in [ ] and a divergent error about the scan axis. Figure 9 shows the roll and pitch (X and Y axes) errors to be cyclic indicating the coning while the yaw (Z axis) error diverges at approximately the rate of the uncompensated gyro drift. The coning motion of the scan axis forms an error source in the estimation of the +Z axis pointing accuracy. The error in the estimate of the attitude about the scan axis does not effect pointing accuracy in scan but is corrected periodically using the ground update algorithm. This allows the target orientation to be satisfactorily acquired should the CP control mode of HEAO-A or C be commanded by the ground.

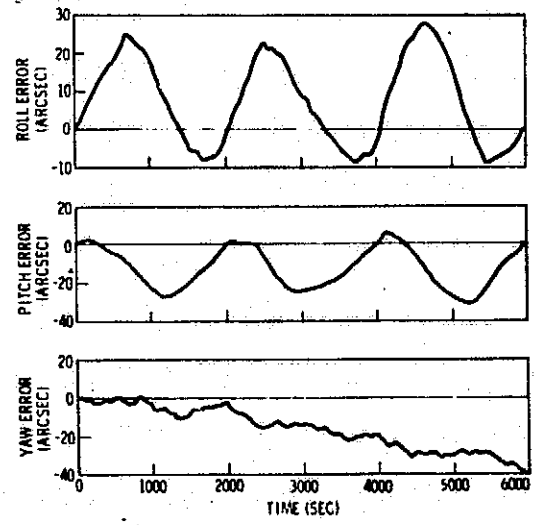

Figure 9. Attitude Reference Scan Mode Performance

Celestial Point performance of the attitude reference is depicted in Figure 10 under conditions of periodic autonomous star tracker updating. In the figure, the effects of the uncompensated gyro drift rate are again apparent as errors which cause the attitude reference errors to increase nearly linearly between updates. Every 64 seconds, a star tracker update is performed which has the effect of reducing the attitude reference errors to very small values again. This method of updating allows the HEAO-B pointing stability to be maintained within the 30 arcsecond requirement without ground intervention.

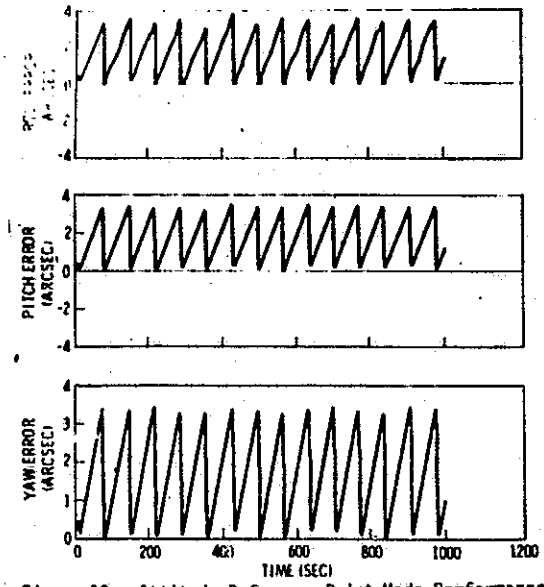

Figure 10. Attitude Reference Point Mode Performance

Overall attitude reference errors due to algorithm simplification (truncation and commutation) and computational roundoff have been shown by test to be less then 3-5 arcseconds over periods of several thousand seconds. The error propagation characteristics from these sources have been noted to be cyclic with time.

The initialization of the attitude reference following Centaur separation or failure recovery is done by using the ground update algorithm in conjunction with the post facto attitude estimates from the ground processing filter. This is typically done while the observatory is operating in the NSA mode and the star trackers are being scanned in a plane normal to the sunline. This initialization scheme is common to all three configurations even though the star tracker orientations differ.

Attitude Controllers

The attitude controller implementations associated with each operating mode are described in this section. The order selected for description follows that of the typical sequence of events noted in Table 7 beginning with the FSA mode which is entered following separation from the Centaur.

First Sun Acquisition (FSA) Mode. This mode provides active control about the roll (X) and pitch (Y) axes to orient the +Z axis of the observatory to the sun. The sun sensor signals are used for orientation control. Actuation is provided by the RCS thrusters as indicated in Table 6. No control about the Z axis is implemented in this mode. A block diagram of the control laws of this mode is shown in Figure 11. As has been indicated previously, the primary objective of this mode was simplicity of implementation to achieve a survival capability should critical conditions be experienced out of ground contact. The use of this mode immediately following Centaur separation resulted from the desire to avoid exposure of the gyros to the separation shock with their spin motors operating while also reducing experiment sun exposure.

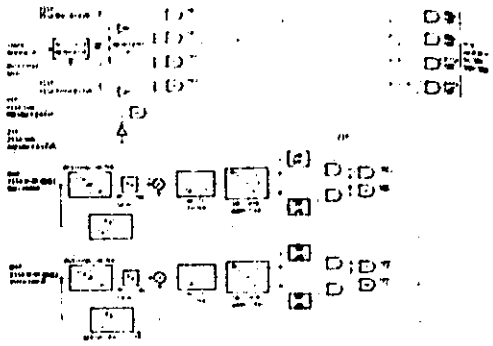

Figure 11. FSA Controller

The FSA Controller features two sets of identical parallel signal paths for pitch and roll. The selection of the controlling parallel signal path is done automatically based upon the state of the sun presence bilevel for the ZSSA. When the bilevel does not indicate sun presence, the duty cycle modulator logic is used for control of the thruster commands. The modulator gates a clock to the control logic which in turn operates to command the correct sign of control torque based upon the processed YSSA signals. The YSSA outputs are combined in the TA processing to produce pitch and roll bilevels. The pitch bilevel indicates that the sun is above or below the YZ plane of the body. The roll bilevel indicates that the sun is to the right or left of the XZ plane. Use of these bilevels for control in this manner results in maneuvering the +Z body axis toward the sun. As the +Z axis approaches the sun, the ZSSA sun presence bilevel changes state and control is transferred to the position plus derived rate signal paths. Position errors from the ZSSA provide proportional signals with a stable null along +Z. The derived rate signal is implemented with a lead network. Once sun acquisition has been accomplished, the deadzone of the switching amplifier produces a limit cycle mode of operation about the sun point orientation. Logic is incorporated in the control loop to inhibit all control commands in this mode upon entry into eclipse. Reacquisition is then accomplished at eclipse exit.

Pointing accuracy in this mode is within a 10 degree half cone angle of the sunline. This provides the necessary illumination of the solar arrays to keep the observatory alive electrically without unduly constraining the control electronics. Mode entry is by ground command or autonomously in the event of a power bus undervoltage indication. Equipment reconfiguration logic with respect to RCS, DPA, sun sensors, and RCS thruster bank select is done prior to mode entry as has been noted previously.

Normal Sun Acquisition. The NSA, CS, and CP control modes which utilize RCS thruster actuation are of a common generic design which is depicted in the block diagram of Figure 12. All of the computations and logic shown are performed by the flight program. Limited position and rate feedback loops are used in conjunction with a pulse-width modulator with deadzone in each control axis. One of the significant payoffs of this common control topology is that a single set of software instructions can be used in the flight program with multiple looping to effect three axis control.

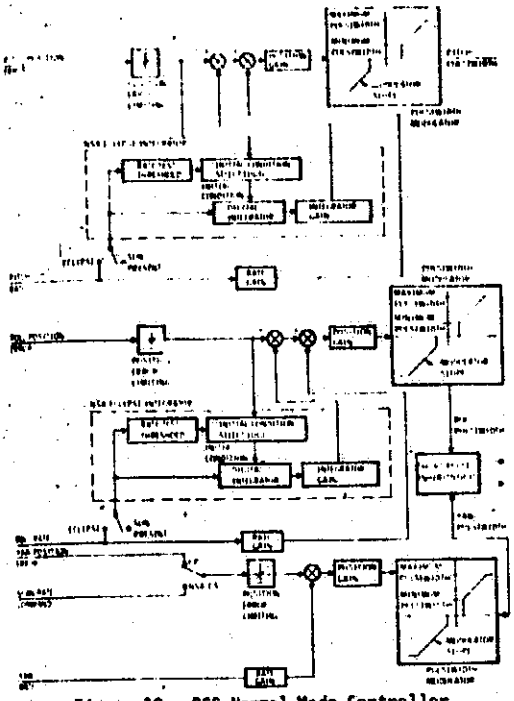

Figure 12. RCS Normal Mode Controller

This is done in the RCS Command Compute module of the flight program (see Table 8). The computation of the position error is control mode dependent and is done in the Attitude Error Determination module.

The NSA position error signals in pitch and roll are derived from the sun sensor outputs in non-eclipse. Yaw axis control is always rate only with a command bias. Large attitude errors as indicated by the lack of a ZSSA sun presence signal result in the YSSA bilevels being used to produce a saturated position error. The sense of the error is derived from the state of the respective pitch or roll bilevel. This produces rate-limited maneuvering toward the sun for large pointing errors. Proportional errors and a signal null are produced by the ZSSA as the +Z axis of the observatory approaches the sun. Attitude hold during eclipse is provided by integration of the body rates to produce an equivalent position error during this portion of the orbit.

Orientation of the +Z axis relative to the sunline is maintained to within a 6.4 degree half cone angle in this control mode. The rate command control loop about Z (yaw) with a command bias provides a scan of the body about the sunline. This scanning motion is used to develop star maps from the star tracker outputs over successive scan revolutions. These data, in conjunction with gyro data, ephemeris, and a star catalog, are used in a set of ground processing algorithms to define an estimate of the inertial orientation time history of the observatory-fixed axes. A specific time point is then selected from the time history and the onboard attitude reference initialized via the ground update algorithm. With the attitude reference initialized, the CS or CP modes which utilize these outputs for position control may be entered.

Celestial Scan. The CS attitude control mode, like the NSA mode, provides orientation of the +Z axis and a controlled rotation about the Z axis. However, in this mode, the +Z axis is pointed inertially in a direction specified by a target quaternion, QT, which defines a target coordinate frame with respect to the ECI frame. The Z axis of the target coordinate frame is the desired alignment of the +Z body axis. Control position errors for the roll (X) and pitch (Y) axes are formed from the direction cosine elements of the body to target transformation matrix which define the projection of the Z target axis on the Y and X body axes. The expressions for computation of these elements are shown on the right side of Figure 13. The vector-matrix multiplication on the left side of the figure is the quaternion equivalent of the coordinate transformation from inertial-to-body (O) to target-to-body (OE). The direction cosines have the proper characteristics of providing a value which is proportional to the +Z axis pointing error. These quantities are used directly in the common control laws of Figure 12 as the position error signals.

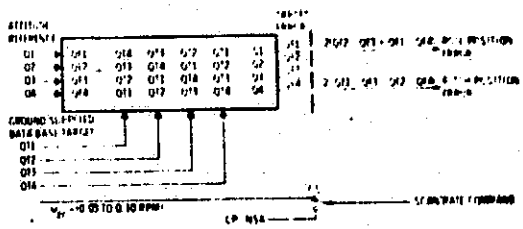

Figure 13. CS Mode Position Error

Changes in the orientation of the Z axis are accomplished by uplinking new target quaternions periodically. This is done once or twice a day to maintain sun pointing. This inertial precession policy results in a rotation of the scan axis through 180 degrees in six months, thereby allowing the experiments to obtain a survey of the entire inertial sphere.

The rate control of the yaw axis is achieved as in the NSA mode by specifying the "position" error to be the rate command and the rate gain to be unity. The position gain then becomes the rate error gain. The scan rate is nominal 0.18 deg/sec and is controlled by the deadzone to within ±0.018 deg/sec of the command value. Scan rate commands up to 0.6 deg/sec may be used under special conditions as dictated by the experiment planning.

The minimum pulsewidths and the deadzones in this mode are specified to achieve pointing of the Z axis to within one degree of the target direction and maintain limit cycle rates below 0.01 deg/sec. The required deadzones are 0.4 degrees and the pulsewidths are 30-100 msec in roll and 75-200 msec in pitch. The difference in pulsewidths reflect the differences in control acceleration and disturbance torque magnitudes in the two axes. The rate deadzone in yaw has been noted above. The minimum pulsewidth in this axis is also 30-100 msec.

Celestial Point. The CP mode exists in all three observatory configurations. This mode provides stabilized three axis control with respect to a specified inertial target. The target quaternion (QT) is transformed via the attitude reference as in the CS mode to derive a body to target error as shown in Figure 14. In the CP mode, however, the first three elements of the error quaternion are used directly as the position errors. The factor of two shown in the figure accounts for the half angle characteristic of the quaternion. These position errors are used as the inputs to the rate plus position control laws of the RCS controllers of Figure 12. The pointing performance of the A and C configurations is similar to that of the Z axis pointing in CS. The control deadzones are set at 0.4 degree in each axis and the minimum pulsewidths are individually specified to maintain limit cycle rates below 0.01 deg/sec in each axis. Propellant consumption tends to be increased during CP operation with respect to CS operation due to the presence of secular disturbance torques from gravity gradient interactions. Target to target maneuvering on RCS is accomplished in the CP mode by commanding a target change. The position error working through the control laws will cause an eigen axis maneuver to be executed between the two target orientations.

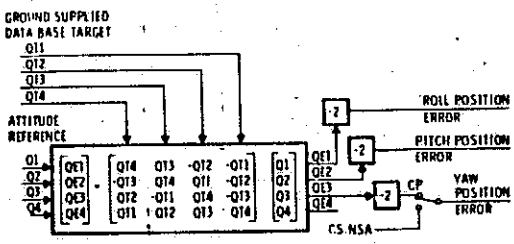

Figure 14. CP Mode Position Error

The CP mode implementation in HEAO-B also features a set of controllers which use reaction wheels (RW) for actuation. A block diagram of the RW control loops is shown in Figure 15. The same position error plus gained rate feedback topology is used in the RW control as was used in the RCS control laws. Key differences exist in the two controllers however. The rate gain in the RW controller is computed on the basis of an algorithm which provides deadbeat response at maneuver termination. The body to RW geometry is also used via the pseudoinverse distribution law to allocate error signals to the individual RW.

The wheel control paths each have a digital integrator to enhance pointing accuracy. The integrators have limited authority and are disengaged during maneuvers. The square root operation shown in the block diagram is included in the control law software to linearize the electrical command to torque output characteristics of the PWEA/RWA combination. Logic which is activated on the basis of wheel speeds as sensed by the tachometers is used to unload the wheels as they approach saturation. Unloading is accomplished in a continuous interval with the combined use of the RW and RCS thrusters to drive the wheel speeds to near zero. The unloading is a substate of the CP mode. Other than for use during unloading, the RCS is not normally used in the CP mode for HEAO-B.

The RW controller maintains the +X axis of the observatory (the experiment viewing axis) to within a few arcseconds of the targeted orientation in stabilized point. Errors in addition to the control error are present due to attitude reference drifts as shown previously. Overall, the RW controller is able to point the experiments to the desired 60 arcseconds accuracy and maintain the orientation stable to 30 arcseconds over intervals of one hour or more. The most severe transient due to control actions is experienced during the times when a wheel passes through zero speed. A simulation of this transient for HEAO-B is shown in Figure 16. At 6.5 minutes in this run, a single wheel passes through zero due to the cyclic nature of the disturbance torques. This results in a change in the friction torque of the wheel which in turn requires the integrator in the forward loop to change signs. Except for such times, the RW controller is able to achieve average pointing accuracies on the order of one arcsecond.

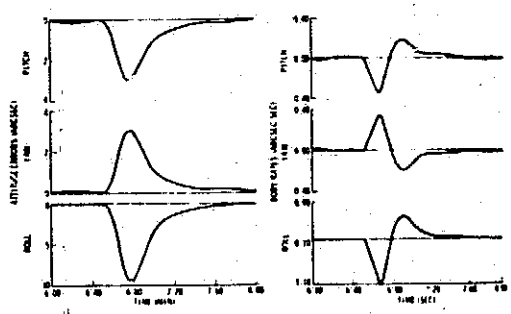

Figure 16. Wheel Speed Reversal Transient

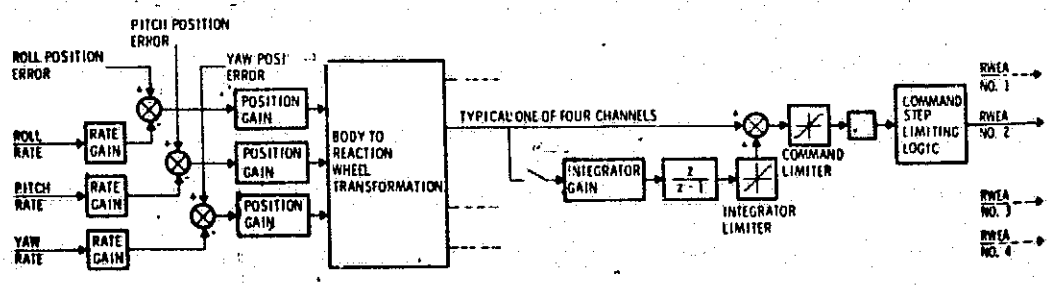

Figure 15. Reaction Wheel Controller

ORIGINAL PAGE IS
OF POOR QUALITY

Target-to-target maneuvering is done by a target change commanded by the ground. Upon receipt of this command, the wheels are unloaded. They are then torqued to reactively transfer momentum into the body to effect a maneuver rate. Maneuver is also a substate of the CP mode. The control logic in maneuvers allows the full momentum capability of the wheels to be used when the maneuver angle is sufficiently large. A typical 180 degree maneuver can be completed in less than 1000 seconds.

IV. HEAO Applications and Modifications

The ACDS design which has been developed for the three initial HEAO missions and payloads has been described. The stress in the development has been on commonality and modularity. The degree to which this goal has been achieved can be measured somewhat by follow-on studies which are now in progress. HEAO-C with its 1979 launch date is being considered for retrieval and reflight by the Space Shuttle Orbiter. In this same time frame the TDRSS (Tracking and Data Relay Satellite System) should be operational and HEAO-C is being looked at as a candidate for providing early verification of the TDRSS capability. The subdivision of the EM and SEM in HEAO-C makes the refurbishment and reflight with modified payloads an attractive low cost option for certain follow-on scanning payloads. The use of a body fixed high-gain antenna coupled with periodic operation of HEAO-C in the CP mode also provides a potential low cost/risk means for early TDRSS equipment testing on-orbit.

Finally, there have been identified a variety of astronomical experiments which possess the potential for furthering the knowledge of the cosmos. With the advent of the Shuttle, these payloads can be launched at much reduced costs. By adapting the HEAO SEM to provide the on-orbit support for these payloads, additional satellite cost savings can be realized. Such applications studies are currently underway. Preliminary results indicate that the HEAO design concept can be effectively used in this context. Resizing of reaction wheels and addition of magnetic torquing devices for unloading can be accommodated by the current design as can be the addition of a pointed articulated antenna for telemetry and command through TDRSS.

V. Conclusions

The conceptual design of the attitude control subsystem for the HEAO satellite series was based upon hardware standardization and software modularization. The implementation of this design is now in the latter stages of component qualification and spacecraft integration and test. Flight verification will be initiated following the first launch in April 1977. Experience gained from this development has indicated the following:

1) development cost reductions can be effected by early concentration on the definition of design requirements for all of the different missions

2) equipment commonality can be enhanced by proper allocation of functions in the preliminary design phases

3) mission and configuration differences still require specific attention as commonality cannot be effectively enforced in the implementations under all circumstances.

Some of the concepts employed on HEAO are also being considered for other programs currently under study. Therefore, the HEAO experiences should be examined critically as the final development and operational phases proceed so that they can be appropriately applied to these future activities.

VI. Acknowledgment

The HEAO ACDS summarized in this paper has involved the efforts of many dedicated people. Particular acknowledgment of individual contributions is given to the following people:

D. C. Kirby and M. S. Robinson (Subproject Mgrs.)

W. F. Shoop (Hardware Development Manager)

R. E. Rose and C. L. Smith (Subsystem Engineers)

E. R. Edge, V. R. Fish, H. Kaichi, T. T. McElroy, H. Nakano, M. L. Ownby, and E. P. Todosiev (Design Analysts)

References

1. R. L. Cleavinger, W. F. Mayer, "Attitude Determination Sensor for Explorer 53," AIAA 14th Aerospace Sciences Meeting, January 1976

2. H. H. Tsao, H. B. Wollman, "Photon Counting Techniques Applied to a Modular Star Tracker Design," AIAA 14th Aerospace Sciences Meeting, January 1976

3. R. P. Iwens, R. L. Farrenkopf, "Performance of a Precision Attitude Determination System (PADS)," AIAA Guidance, Control, and Flight Mechanics Conference, August 1971

4. T. T. McElroy, R. P. Iwens, "Precision Onboard Attitude Reference Using the Generalized Inverse," 12th Annual Allerton Conference on Circuit and System Theory, October 1974

5. R. P. Iwens, P. C. Wheeler, "A Simple Method for Precise Attitude Determination of a Spinning Spacecraft," Sixth Hawaii International Conference of System Sciences, January 1973

APPENDIX H

HEAO-B ACDS REVIEW TEAM CALENDAR

MONTH July - August 19 76 August 26, 6

SUNDA.	MONDAY	TUESDAY	WEDNESDAY	THURSDAY	FRIDAY	SATURDAY
25	26	27 8:30 a.m. Review of HEAO-B ACDS by Dale Hoffman of TRW. Exec. Conf. Room/4487	28	29 8:00 a.m. Team Review of Straw Man Schedule and prepare Target Schedule. MIC/4487	30	31
1	2	3 8:00 a.m. Presentation of -B ACDS Reqts. and Specs. by Bob Wolf of EE71 ECR/4487	4	5 8:00 a.m. HEAO-B Activation M. Singley MIC/4487	6	7
8	9	10 8:00 a.m. Review charter and specs. ECR/4487	11	12 8:00 a.m. Report on Pointing, Maneuvering, and Momentum Management H. Kennel MIC/4487	13	14
15	16	17 8:00 a.m. Report on HEAO-B ST, RGA, RWA, and RWEA Sims/Doane ECR/4487	18	19 8:00 a.m. Report on G&C Laws, Stability, Modes, & Assoc. Software Shelton/Rowe ECR/4487	20	21
22	23	24 8:00 a.m. Report on RCS & Electrical Systems Jones/Milner ECR/4487	25 8:00 a.m. Criticism of ACDS from targeting viewpoint. Tom Recio 9:00 a.m. Experiment Reqts. Jim Powers- ECR/4487	26 8:00 a.m. Critical Single Point Failures Affecting ACDS. N. Milly ECR/4487	27	28

PROGRAM PLANNER NO. 1 [illegible] WRITE DAYS OF MONTH IN THE SMALL QUARTER CIRCLES

ORIGINAL PAGE IS OF POOR QUALITY

MONTH August - September 19 76

September 28, 76

SUNDAY	MONDAY	TUESDAY	WEDNESDAY	THURSDAY	FRIDAY	SATURDAY
29	8:00 a.m. ACDS Flight Software - Hight 9:00 a.m. - Experiment Reqts - Power (HA) 10:00 a.m. - Ground-Generated Info Used by Flight Software - Singley 10:30 a.m. - Telecon on RW Model MIC/4487	31		2 8:15 a.m. Prepare Report Outline. Discuss Draft RIDs & Changes in Specs. ECR/4487	3	4
5	6	7	8	9 8:15 a.m. Review CEI and Hardware Specs. ECR/4487	10	11
12	13 8:15 a.m. Review CEI & ACDS Specs. 10:00 a.m.- Status of HEAO-A ACDS Report - Wojtalik Receive CDR Documentation(? ECR/4487	14	15	16 8:15 a.m. Review ACDS Specs Presentation on SCP - (Rowe) Prepare for CDR ECR/4487	17	18
19	20 8:15 a.m. Review ACDS Spec ECR/4487	21	22	23	24	25
26	27	28 8:15 a.m. CDR Documentation Review ECR/4487	29	30		

PROGRAM PLANNER NO. 1 HINDS PRESS, 6337 OAK PARK, BERWYN, ILL.

WRITE DAYS OF MONTH IN THE SMALL QUARTER CIR.

MONTH October 19 76 September 28, 1976

SUNDAY	MONDAY	TUESDAY	WEDNESDAY	THURSDAY	FRIDAY	SATURDAY
					1	2
3	4 8:15 a.m. CDR Documentation Review MIC/4487	5	6 8:15 a.m. Dale Hoffman and Dick Rose Pre-CDR Meeting MIC/4487	7 8:15 a.m. Hoffman/Rose Maneuvering and Targeting Presentation MIC/4487	8	9
10	11 H O L I D A Y COLUMBUS DAY	12 8:15 a.m. Prep. for CDR MIC/4487	13	14	15 1:00 p.m. Prep. for CDR ECR/4487	16
17	18	19 ← TRW: ACDS	20 CDR →	21	22	23
24	25 H O L I D A Y VETERANS DAY	26	27	28	29	30

PROGRAM PLANNER NO. 1 NINUS PRESS, 2927 OAK PARK, BERWYN, ILL.

WRITE DAYS OF MONTH IN THE SMALL QUARTER CIRCLES

APPENDIX I

HEAO-B ACDS REVIEW TEAM ACTION ITEM LOG

ORGANIZATION:	MARSHALL SPACE FLIGHT CENTER	NAME:
SYSTEMS DYNAMICS LABORATORY POINTING CONTROL SYSTEMS BRANCH	ACTION ITEM LOG	S. M. SELTZER DATE: September 28, 1976 (REVISED)

NO.	ITEM	ASSIGNED TO	DUE DATE	DISPOSITION
1.	PREPARE STRAW MAN SCHEDULE.	C. GREEN	27 JUL 76	DISTRIBUTE 27 JULY.
2.	COMMENTS ON ORGANIZATIONAL MATERIAL FROM JULY 23.	ALL MEMBERS	27 JUL 76	COMPLETED 27 JULY.
3.	CONTACT HEAO PROJECT OFFICE FOR PROPOSED 3 AUG PRESENTATION ON ACDS REQUIREMENTS AND SPECS.	C. GREEN	27 JUL 76	BOB WOLF PRESENTED ON 3 AUG 76.
4.	SET UP PROPOSED 10 AUG PRESENTATION OF EXPERIMENT REQUIREMENTS UPON ACDS (BY SAO?)	B. WOLF	27 JUL 76	BOB WOLF SETTING THIS UP.
5.	OBTAIN LATEST HEAO-B CEI SPEC.	C. GREEN	ASP	C. GREEN REQUESTED COPIES FOR TEAM.
6.	OBTAIN LATEST ACDS SUBSYSTEM SPEC.	B. WOLF	5 AUG 76	B. WOLF OBTAINED SPEC.
7.	CONTACT PROJECT OFFICE AND CHIEF ENGR's OFFICE FOR REPRESENTATIVE AT EACH MEETING.	C. GREEN	ASP	BOB WOLF, DOC CARLILE, INVITED.
8.	CONTACT WOJTALIK's OFFICE FOR APPOINTMENT TO DISCUSS MISSION, SCOPE OF TEAM ACTIVITIES.	C. GREEN	ASP	MEETING TOOK PLACE WEDNESDAY, JULY 28.
9.	LOCATE HEAO-B ACDS PERTINENT DOCUMENTATION, USING HOFFMAN's LIST.	C. GREEN	ASP	DOCUMENTATION LOCATED.
10.	SUGGEST THAT TOM GUFFIN PARTICIPATE IN REVIEW TEAM MEETINGS; DISCUSS W/LLOYD STONE.	M. SINGLEY	ASP	REP FROM CAUSEY's ORGANIZATION INVITED.

(ALL ACTION ITEMS COMPLETED ON THIS PAGE)

FILE NO. 1

MSFC - Form 3304 (Rev October 1972)

ORGANIZATION:	MARSHALL SPACE FLIGHT CENTER	NAME:
SYSTEMS DYNAMICS LABORATORY POINTING CONTROL SYSTEMS BRANCH	ACTION ITEM LOG (CONTINUED)	S. M. SELTZER DATE: SEPTEMBER 28, 1976 (REVISED)

NO.	ITEM	ASSIGNED TO	DUE DATE	DISPOSITION
11.	RECOMMEND HOW BEST TO INCORPORATE ON-BOARD UPDATE (AND INTERFACE) OF ACDS BY STAR TRACKER.	CRAIGHEAD/ KENNEL	ASP	INTERFACE DEFINED AGREED UPON BY CRIAGHEAD/KENNEL: GROUND SENDS UP (TO ACDS) 2 SETS OF QUATERNIONS.
12.	DETERMINE HOW BEST TO SCHEDULE HARDWARE (ST, RGA, RW's) REPORTS.	SIMS	ASP	PLAN TO REPORT ON ALL ACDS HARDWARE AT ONE TIME (19 AUG) UNLESS CLYDE JONES DEMURS.
13.	PREPARE PROPOSED TEAM CHARTER.	SELTZER	12 AUG 76	REVIEWED & DISTRIBUTED
14.	ATTEMPT TO OBTAIN CDA-RELATED CHANGES OF PRELIMINARY DESIGN AUDIT FOR DPA SOFTWARE AND ENSURE THAT TEAM HAS LATEST SOFTWARE REQUIREMENTS.	HIGHT	31 AUG 76	COMPLETED BY MEMO, HIGHT TO SELTZER, AUG 20, 1976 (APP. O)
15.	REVIEW CEI SPEC AND PREPARE LISTS OF REQUIRED CHANGES.	TEAM	16 SEP 76	COMPLETED 9 SEP 76.
16.	DETERMINE REASON FOR x-y PLANE CONSTRAINT OF $\pm 1°$ OF THE SUN LINE.	B. WOLF	ASP	CLOSED. REASON--TO OBVIATE NEED FOR A NEW THERMAL ANALYSIS.

(ALL ACTION ITEMS COMPLETED ON THIS PAGE)

MSFC - Form 3306 (Rev October 1972)

FILE NO. 2

ORGANIZATION: SYSTEMS DYNAMICS LABORATORY POINTING CONTROL SYSTEMS BRANCH	MARSHALL SPACE FLIGHT CENTER ACTION ITEM LOG (CONTINUED)	NAME: S. M. SELTZER DATE: SEPTEMBER 28, 1976(REVISED)

NO.	ITEM	ASSIGNED TO	DUE DATE	DISPOSITION
17.	DETERMINE MOMENTUM VS. TIME ANALYSIS/SIMULATION STATUS, PAYING PARTICULAR ATTENTION TO "LAZY SUSAN" AND ANY X-AXIS ATTITUDE POINTING REQUIREMENT.	H. KENNEL	9 SEP 76	KENNEL's NOTE TO SELTZER 3 SEP 76. OPERATION NOT OBJECTIONAL FROM ACDS VIEWPOINT (APP. P)
18.	SET UP BRIEFING (NANCY MILLY) ON FMEA AND SINGLE POINT FAILURES FOR 26 AUG.	M. SINGLEY	12 AUG 76	TOOK PLACE 26 AUG.
19.	CONTACT F. WOJTALIK: WHY DOES RECIO STATE ACDS PERFORMANCE UNACCEPTABLE? ESTABLISH BRIEFING FOR TEAM.	SELTZER	12 AUG 76	BRIEFING TOOK PLACE 13 SEP 76.
20.	OBTAIN MASS DISTRIBUTION/MOMENTS OF INERTIA FOR "LAZY SUSAN" FOR HANS KENNEL.	B. WOLF	ASP	CLOSED BY RESPONSE TO ITEM 17.
21.	OBTAIN MOMENTS OF INERTIA OF MOTOR/GEAR TRAIN FOR HANS KENNEL.	SIMS	ASP	I_{MOTOR}=5 gm cm^2 (NEGLIGIBLE) $I_{GEAR\ TRAIN}$ (NEGLIGIBLE)
22.	SET UP PRE-CDR BRIEFING FOR 6-7 OCT.	CARLILE	15 SEP 76	DICK ROSE & DALE HOFFMAN WILL BE HERE 6-7 OCT.
23.	TAKE STEPS TO ENSURE TIMELY RECEIPT OF CDR DOCUMENTATION, i.e., 13 SEP 76.	B. WOLF/CARLILE	ASP	RECEIVED 14 SEP 76.
24.	SET UP TELECON OR DISCUSSION TO VERIFY UNDERSTANDING OF TRW's RW MODEL (TRW MEMO HEAO 74-460-209).	SIMS	ASP	FOUR TRW MEMOS REVIEWED. TELECON UNCESSARY.

FILE NO. 3

MSFC - Form 3380 (Rev October 1972)

ORIGINAL PAGE IS OF POOR QUALITY

ORGANIZATION: SYSTEMS DYNAMICS LABORATORY POINTING CONTROL SYSTEMS BRANCH	MARSHALL SPACE FLIGHT CENTER ACTION ITEM LOG (CONTINUED)	NAME: S. M. SELTZER DATE: SEPTEMBER 28, 1976 (REVISED)

NO.	ITEM	ASSIGNED TO	DUE DATE	DISPOSITION
25.	DISCUSS JITTER DEFINITION AND REQUIREMENT WITH SAO AT MEETING TO BE SCHEDULED.	WOLF	ASP	CLOSED BY OPENING ITEM 39.
26.	DETERMINE NSA AND FSA DESIGN VERIFICATION RATE REQUIREMENTS.	SHELTON	31 AUG 76	CLOSED-FSA INITIAL CONDITION RATES CAML FROM A COMBINATION OF DUMPING 3 SATURATED RW's INTO VEHICLE AND THE FAILURE OF WORST CASE THRUSTER WITH LPL SET AT 1.25 sec.
27.	RESOLVE QUESTIONS CONCERNING ACCURACY AND RELIABILITY NUMBERS PRESENTED AT HEAO-B PDR FOR z-SUN SENSOR.	SIMS	9 SEP 76	ACCURACY OF 3.1° (3 σ) IS SATISFACTORY AND EXPLAINED BY SCALE FACTOR VARIATION AND COARSE SOLAR SIMULATION (USED FOR CALIBRATION).
28.	CHANGE TITLE OF 3d DAY OF CDR TO REFLECT IT IS SOFTWARE.	WOLF	AUG	CARLILE WILL ENSURE THIS.
29.	ENSURE TRW ALLOTS SUFFICIENT TIME TO COVER SOFTWARE IN DEPTH.	WOLF	AUG	ACDS WILL LAST 3 DAYS. 3rd DAY ENTIRELY FOR SOFTWARE.
30.	WHY MUST COMMENTS ON HEAO-A TEST RESULTS BE SUBMITTED BY 17 SEP? CHANGE DUE DATE TO AFTER HEAO-B CDR.	WOLF	AUG	DELETE -- HEAO-A.
31.	SUBMIT REPORT ON REVIEW OF HEAO-A TEST RESULTS DOCUMENTATION.	SHELTON/COX	30 SEP 76	DELETE -- HEAO-A.
32.	HOW MANY MANEUVERS PER TIME PERIOD IS POWER PROFILE BASED ON?	MILNER	31 AUG 76	POWER ESTIMATE BASED ON 2 MANEUVERS/ORBIT. THIS IS MORE THAN ADEQUATE.
33.	WAS HEAO-A REVIEW TEAM's RECOMMENDATION ON "UNDERVOLTAGE SWITCHOVER" CRITERION ACCEPTED?	WOLF		ADDRESSED BY HOFFMAN AT 6 OCT PRESENTATION.

FILE NO. 4

MSFC - Form 3304 (Rev October 1972)

ORGANIZATION:	MARSHALL SPACE FLIGHT CENTER	NAME:
SYSTEMS DYNAMICS LABORATORY POINTING CONTROL SYSTEMS BRANCH	ACTION ITEM LOG (CONTINUED)	S. M. SELTZER DATE: SEPTEMBER 28, 1976 (REVISED)

NO.	ITEM	ASSIGNED TO	DUE DATE	DISPOSITION
34.	SET UP PRESENTATION BY WOJTALIK ON DISPOSITION OF HEAO-A REPORT.	SELTZER		PRESENTATION SCHEDULED FOR 10:00 a.m. on 13 SEP 76.
35.	DETERMINE PREVIOUS ELECTRICAL CONNECTOR EXPERIENCE w.r.t. FAILURES.	WOLF		OPEN
36.	DETERMINE IF HEAO TRANSPORTED HORIZONTALLY TO CAPE AND DETRIMENTAL EFFECTS ON RCS.	JONES	31 AUG 76	"GAS IMPEDENCE FLOW RATE" PERFORMED AT CAPE BECAUSE HEAO IS TRANSPORTED HORIZONTALLY. THIS REPLACES THE USUAL HOT FIRE TEST BEFORE THE SHROUD IS PUT ON.
37.	DETERMINE HOW COMPUTER KNOWS WHICH TARGET TO POINT AT.	CARLILE	1 SEP 76	TARGETS INDEXED AND STORED IN STORED COMMAND PROGRAMMER (SCP).
38.	DETERMINE TESTED TRACK RATE OF STA.	SIMS	16 SEP 76	TALKED TO MINN.-HONEYWELL. THEY ARE TESTING TO 2 min/s (WHICH IS IN STA SPEC). (APP. Q)
39.	WRITE ECR TO DEFINE JITTER IN SPEC.	SHELTON		
40.	DISCUSS SCP AND HOW COMMANDS ARE UPDATED, EMPHASIZING ACDS INTERFACE.	ROWE	16 SEP 76	PRESENTATION TO TEAM BY BOB ROWE. (APP. R)
41.	DEFINE PROBABILITIES USED IN CEI SPEC.	CARLILE		
42.	DOES E&C LAB DETERMINE IF HARDWARE EQUIPMENT SPEC MEETS ACDS SUBSYSTEM SPEC?	DOANE	13 SEP 76	YES & SENSORS MEET SPEC; RWA & RWEA ARE STILL BEING CHECKED.

FILE NO. 5

MSFC - Form 3304 (Rev October 1972)

ORGANIZATION: SYSTEMS DYNAMICS LABORATORY POINTING CONTROL SYSTEMS BRANCH	MARSHALL SPACE FLIGHT CENTER ACTION ITEM LOG (CONTINUED)	NAME: S. M. SELTZER DATE: SEPTEMBER 28, 1976

NO.	ITEM	ASSIGNED TO	DUE DATE	DISPOSITION
43.	PRESENT TO TEAM: WHO HAS RESPONSIBILITY FOR ENSURING EITHER THAT HARDWARE EQUIPMENT MEETS ITS SPEC OR THAT A WAIVER IS APPROVED AND HOW THIS PROCESS TAKES PLACE.	DOANE	ASP	WHOEVER SIGNS THE COQ IS RESPONSIBLE. RE: MEMO FROM CLYDE BROWN.
44.	WRITE EXCEPTION TO PARA. 3.3.15 THAT IS REFERENCED IN PARA. 3.1.1.2.6.7 (p. 3-39) OF CEI SPEC.	JONES	16 SEP 76	COMPLETED 20 SEP 76.
45.	HOW ARE SUBSYSTEM (INCLUDING ACDS) POTENTIAL OPERATIONAL PROBLEMS DISCOVERED BY FLT OPNS ORGN? WHAT IS THEIR FEEDBACK TO RESPONSIBLE S&E ORGANIZATIONAL ELEMENTS? (EX. SCP & COINCIDENCE TIME COMMANDS).	WOLF		OPEN
46.	VERIFY THAT PULSE COMMAND WIDTH USED BY TRW IS 0.040 sec.	JONES		EXPLAINED AT CDR.
47.	REVIEW FLIGHT PROGRAM REQUIREMENTS DOCUMENT.	TEAM		COMPLETED.

FILE NO. 6

MSFC - Form 3304 (Rev October 1972)

APPENDIX J

HEAO-B ACDS REVIEW TEAM MINUTES

PRECEDING PAGE BLANK NOT FILMED

National Aeronautics and
Space Administration

George C. Marshall Space Flight Center
Marshall Space Flight Center, Alabama
35812

NASA

Reply to Attn of ED22

August 10, 1976

TO: Distribution

FROM: ED22/Mr. Green, Systems Dynamics Laboratory

SUBJECT: Minutes of HEAO-B ACDS Ad Hoc Review Team Meetings of July 23 and 27, 1976

An organizational meeting of the HEAO-B ACDS Review Team was held July 23, 1976. Dr. Sherman Seltzer announced his nomination as the new team chairman and presented a proposed review outline. Team members were asked to comment on the proposed outline at the July 27, 1976 scheduled meeting. The proposed outline was based on completing the review of the HEAO-B ACDS by the time of the Observatory ACDS Critical Design Review, scheduled for September 21, 1976. Bob Rowe of Data Systems Laboratory replaced Archie Jackson on the review team. Mr. Rowe will concentrate on the flight software.

The first regularly scheduled meeting was held July 27, 1976. Maurice Singley of Systems Analysis and Integration Laboratory proposed Paul Craighead of the same lab as his alternate. The team agreed to change the meeting time to 8 a.m. but retained the meeting days as Tuesday and Thursday. Whether selection of guide stars was a subject for team review was discussed but not resolved. Singley will discuss with his lab management the possibility of Tom Guffin (who is knowledgeable of judicious target selection routines) becoming part of the review team.

Dale Hoffman of TRW made a presentation on the HEAO-B ACDS at the first working meeting on July 27. He reviewed the HEAO-B configuration and named each of the instruments. He explained that the experiment was constrained from pointing within 30° half cone angle of the sun. The equipment constituting the ACDS subsystem was discussed and differences between the subsystem for HEAO-A and -B were pointed out. The operating modes of the ACDS were explained. They are: (1) celestial point, (2) normal sun acquisition, and (3) first sun acquisition. The maximum scan rate for HEAO-B is 2 arc min/sec because of limits imposed by the star tracker acquisition speed. Mr. Hoffman also discussed the HEAO-B activation time line and reviewed the documentation status.

A "straw man" HEAO-B review schedule and a review team membership list were presented and will be discussed in the July 29 meeting.

C. E. Green

APPROVAL:

Sherman M. Seltzer
Chairman, HEAO-B ACDS
Review Team

Enclosure

cc:
EE71/Mr. Wojtalik
EC01/Mr. Moore
ED01/Dr. Lovingood
ED01/Dr. Worley
EL01/Dr. Thomason
EP01/Mr. McCool
ACDS Team Members
EC21/Dr. Doane
ED22/Mr. Green
EL04/Mr. Hight/Mr. Cox
EF15/Mr. Rowe/Mr. Collins
EP24/Mr. Lee Jones
ED12/Mr. Kennel
EC13/Mr. Milner
ED12/Mr. Shelton
EC22/Mr. Sims
EL54/Mr. Singley/Mr. Craighead

ORGANIZATION:	MARSHALL SPACE FLIGHT CENTER	NAME:
SYSTEMS DYNAMICS LABORATORY POINTING CONTROL SYSTEMS BRANCH	HEAO-B ACDS REVIEW TEAM COMPOSITION	S. M. SELTZER DATE: JULY 30, 1976

SHERMAN M. SELTZER	CHAIRMAN	SD LAB
GEORGE B. DOANE, III	ACDS HARDWARE	E&C LAB
CLAUDE E. GREEN	STRUCTURAL DYNAMICS	SD LAB
HERMON HIGHT/ROBERT COX	FLIGHT SOFTWARE	SA&I LAB/M&S
BOB ROWE/CHARLES COLLINS	FLIGHT SOFTWARE	DATA SYS. LAB
LEE JONES	RCS	STRUC & PROP LAB
HANS KENNEL	POINTING, MANEUVERING, & MOMENTUM MANAGEMENT	SD LAB
ROBERT MILNER	ELECTRICAL SYS.	E&C LAB
HARVEY SHELTON	STAB. & CONTROL	SD LAB
C. R. SIMS	ACDS HARDWARE	E&C LAB
MAURICE SINGLEY/PAUL CRAIGHEAD	SYSTEMS/GROUND SOFTWARE	SA&I LAB

FILE NO. _____

MONTH JULY - AUGUST 1976

July 30, 1976

SUNDAY	MONDAY	TUESDAY	WEDNESDAY	THURSDAY	FRIDAY	SATURDAY
25	26	27 8:30 a.m. Review of HEAO-B ACDS by Dale Hoffman of TRW. Exec. Conf. Room/4487	28	29 8:00 a.m. Team Review of Straw Man Schedule and prepare Target Schedule. ECR/4487	30	31
1	2	3 8:00 a.m. Presentation of -B ACDS Reqts. and Specs. by Bob Wolf of EE71 ECR/4487	4	5 8:00 a.m. HEAO-B Activation M. Singley ECR/4487	6	7
8	9	10 8:00 a.m. Review of Experiment Requirements upon ACDS by SAO? ECR/4487	11	12 8:00 a.m. Report on Pointing, Maneuvering, and Momentum Management H. Kennel ECR/4487	13	14
15	16	17 8:00 a.m. Report on G&C Laws, Stability, Modes, & Assoc. Software Shelton/Rowe ECR/4487	18	19 8:00 a.m. Report on HEAO-B ST, RGA, RWA, and RWEA Sims/Doane ECR/4487	20	21
22	23	24 8:00 a.m. Report on RCS & Electrical Systems Jones/Milner	25	26 8:00 a.m. Report on Ground-generated info used by ACDS Flight Software Concerns Singley/Hight	27	28

ORIGINAL PAGE IS OF POOR QUALITY

TOGRAM PLANNER NO. 1 HINDS PRESS, 5357 OAK PARK, BERWYN, ILL.

WRITE DAYS OF MONTH IN THE SMALL QUARTER CIRCLES.

ORGANIZATION	MARSHALL SPACE FLIGHT CENTER	NAME:
SYSTEMS DYNAMICS LABORATORY POINTING CONTROL SYSTEMS BRANCH	COMPONENT DOCUMENTS	S. M. SELTZER DATE: JULY 30, 1976 (REVISED)

HARDWARE	AVAIL. DOCUMENTATION		COMPON. ENGR
TA	PDA/CDA DATA PKG;	EQ. SPEC	PANCIERA
OPA	PDA/CDA DATA PKG;	EQ. SPEC	PANCIERA
ZSSA	PDA/CDA DATA PKG;	EQ. SPEC	SIMS
YSSA	PDA/CDA DATA PKG;	EQ. SPEC	SIMS
RWEA	CDA/CDA + (TO BE SUPPLIED)	EQ. SPEC	SIMS
RWA	PDA/CDA	EQ. SPEC	SIMS
RGA	PDA/CDA	EQ. SPEC	SIMS
SOFTWARE			
FLT. PROG. HEAO-B FPH-B	FPRD, FPDD	--	HIGHT
PRE-FLT I/F PROG. PIP	REQ. DOC. (RD), DESCR. DOC. (DD)	--	HIGHT
RCS(DTM)	PDA/CDA DATA PKG	EQ 1-50	JONES

FILE NO.

MSFC - Form 3354 (Rev October 1970)

ORIGINAL PAGE IS
OF POOR QUALITY

ORGANIZATION:	MARSHALL SPACE FLIGHT CENTER	NAME:
SYSTEMS DYNAMICS LABORATORY POINTING CONTROL SYSTEMS BRANCH	ACTION ITEM LOG	S. M. SELTZER DATE: JULY 30, 1976 (REVISED)

NO.	ITEM	ASSIGNED TO	DUE DATE	DISPOSITION
1.	PREPARE STRAW MAN SCHEDULE.	C. GREEN	27 JUL 76	DISTRIBUTE 27 JULY.
2.	COMMENTS ON ORGANIZATIONAL MATERIAL FROM JULY 23.	ALL MEMBERS	27 JUL 76	COMPLETED 27 JULY.
3.	CONTACT HEAO PROJECT OFFICE FOR PROPOSED 3 AUG PRESENTATION ON ACDS REQUIREMENTS AND SPECS.	C. GREEN	27 JUL 76	BOB WOLF WILL PRESENT ON 3 AUG 76.
4.	SET UP PROPOSED 10 AUG PRESENTATION OF EXPERIMENT REQUIREMENTS UPON ACDS (BY SAO?)	B. WOLF	27 JUL 76	BOB WOLF SETTING THIS UP.
5.	OBTAIN LATEST HEAO-B CEI SPEC.	C. GREEN	ASP	C. GREEN REQUESTED COPIES FOR TEAM.
6.	CONTACT D. HOFFMAN FOR LATEST ACDS SUBSYSTEM SPEC.	C. GREEN	ASP	C. GREEN ATTEMPTING TO OBTAIN SPEC.
7.	CONTACT PROJECT OFFICE AND CHIEF ENGR's OFFICE FOR REPRESENTATIVE AT EACH MEETING.	C. GREEN	ASP	BOB WOLF, DOC CARLILE, INVITED.
8.	CONTACT WOJTALIK's OFFICE FOR APPOINTMENT TO DISCUSS MISSION, SCOPE OF TEAM ACTIVITIES.	C. GREEN	ASP	MEETING TOOK PLACE WEDNESDAY, JULY 28.
9.	LOCATE HEAO-B ACDS PERTINENT DOCUMENTATION, USING HOFFMAN's LIST.	C. GREEN	ASP	
10.	SUGGEST THAT TOM GUFFIN PARTICIPATE IN REVIEW TEAM MEETINGS; DISCUSS W/LLOYD STONE.	M. SINGLEY	ASP	REP FROM CAUSEY's ORGANIZATION INVITED.

FILE NO.

MSFC - Form 3304 (Rev October 1972)

ORGANIZATION:	MARSHALL SPACE FLIGHT CENTER	NAME:
SYSTEMS DYNAMICS LABORATORY	ACTION ITEM LOG	S. M. SELTZER
POINTING CONTROL SYSTEMS BRANCH	(CONTINUED)	DATE: JULY 30, 1976

NO.	ITEM	ASSIGNED TO	DUE DATE	DISPOSITION
11.	RECOMMEND HOW BEST TO INCORPORATE ON-BOARD UPDATE (AND INTERFACE) OF ACDS BY STAR TRACKER.	CRAIGHEAD/ KENNEL	ASP	INTERFACE DEFINED AGREED UPON BY CRAIGHEAD/KENNEL: GROUND SENDS UP (TO ACDS) 2 SETS OF QUATERNIONS.
12.	DETERMINE HOW BEST TO SCHEDULE HARDWARE (ST, RGA, RW's) REPORTS.	SIMS	ASP	PLAN TO REPORT ON ALL ACDS HARDWARE AT ONE TIME (19 AUG) UNLESS CLYDE JONES DEMURS.
13.	PREPARE PROPOSED TEAM CHARTER.	SELTZER	ASP	
14.	ATTEMPT TO OBTAIN CDS-RELATED CHANGES OF PRELIMINARY DESIGN AUDIT FOR DPA SOFTWARE AND ENSURE THAT TEAM HAS LATEST SOFTWARE REQUIREMENTS.	HIGHT	Mid-AUGUST	

FILE NO. _____

MSFC - Form 3306 (Rev October 1972)

National Aeronautics and
Space Administration

George C. Marshall Space Flight Center
Marshall Space Flight Center, Alabama
35812

NASA

Reply to Attn of: ED22

August 10, 1976

TO: Distribution

FROM: ED22/Mr. Green, Systems Dynamics Laboratory

SUBJECT: Minutes of the August 3, 1976, HEAO-B ACDS Ad Hoc Review Team Meeting

A scheduled meeting of the review team was held August 3, 1976. An attendees list is enclosed.

Bob Wolf of the HEAO Chief Engineer's Office presented a review of the ACDS portions of the HEAO-B Observatory System Specification (72M10067, Rev. A). Several discrepancies between the CEI and the Subsystem Specification were identified. Team members were asked to review the CEI specification and prepare lists of required changes by August 10, 1976. It was concluded that the team should prepare RIDs on the documentation as the review progresses. Mr. Wolf accepted an action to provide copies of the latest Subsystem Specification at the August 5, 1976 meeting.

The question was raised as to whether the review team charter covered verification. The consensus was that verification was an essential part of the review. It was noted that the term "probability" was used loosely in the documentation. A technical question concerning what would happen if the x-z plane constraint of $\pm 1°$ of the sun line were violated. Mr. Wolf took an action to answer this question.

Mr. Carlile of the Project Office requested that the team plan to have a thorough RID review early in September.

An attendee list for the August 3, 1976 review team meeting is enclosed.

C. E. Green

C. E. Green

APPROVAL:

Sherman M. Seltzer
Chairman, HEAO-B ACDS
Review Team

Enclosure

ORIGINAL PAGE IS
OF POOR QUALITY

cc:
EE71/Mr. Wojtalik
EC01/Mr. Moore
ED01/Dr. Lovingood
ED01/Dr. Worley
EL01/Dr. Thomason
EP01/Mr. McCool
ACDS Team Members
EC21/Dr. Doane
ED22/Mr. Green
EL04/Mr. Hight/Mr. Cox
EF15/Mr. Rowe/Mr. Collins
EP24/Mr. Lee Jones
ED12/Mr. Kennel
EC13/Mr. Milner
ED12/Mr. Shelton
EC22/Mr. Sims
EL54/Mr. Singley/Mr. Craighead

August 3, 1976

ATTENDEES

Name	Organization	Phone
C. Green	ED22	3-2525
G. B. Doane III	EC21	3-1418
H. F. Kennel	ED12	3-4718
C. R. Sims	EC22	3-0795
H. Hight	EL04	3-5222
R. Milner	EC13	3-4638
R. Cox	M&S/EL04	772-3411
M. E. Singley	EL54	3-2713
R. J. Rowe	EF15	3-3578
Bob Wolf	EE71	3-4217
Doc Carlile	HA23	3-1830

National Aeronautics and
Space Administration

George C. Marshall Space Flight Center
Marshall Space Flight Center, Alabama
35812

NASA

Reply to Attn of: ED22

August 11, 1976

TO: Distribution

FROM: ED22/Mr. Green, Systems Dynamics Laboratory

SUBJECT: Minutes of August 10, 1976, HEAO-B ACDS Ad Hoc Review Team Meeting

The scheduled review team meeting was held in the ECR at 8:00 a.m., chaired by Dr. Seltzer.

The chair distributed, discussed and presented the current schedule and action item charts. These charts will be updated for the next scheduled meeting. Mr. H. Kennel was assigned the action to look into the angular momentum introduced into the Observatory by the FPTA.

A lengthy discussion of the draft of the Team Charter was held. The chair took copious notes which will be incorporated in a new draft of the Charter. Much of the discussion had to do with scoping the team's sphere of activity and the team's interface with other functional areas, e.g., telemetry. The question of the team's interaction with the ground software (specifically the determination of the attitude quarternions) was a topic of lengthy discussion. The chair accepted an action to contact Mr. Wojtalik and explore this area.

The last action discussed and assigned to Mr. Singley was in the area of FMEAs. Mr. Singley will contact Ms. Nancy Milly about a presentation of the FMEA status as it applies to the HEAO-B ACDS.

During the course of the meeting it was decided that each future presenter will reference the application specifications as a part of his discussion. The team will disposition the specifications as appropriate.

for C. E. Green

APPROVAL:

Sherman M. Seltzer
Chairman, HEAO-B ACDS
Review Team

Enclosure
Attendance List

Distribution:
EE71/Mr. Wojtalik
EC01/Mr. Moore
ED01/Dr. Lovingood
ED01/Dr. Worley
EL01/Dr. Thomason
EP01/Mr. McCool
ACDS Team Members
EC21/Dr. Doane
ED22/Mr. Green
EL04/Mr. Hight/Mr. Cox
EF15/Mr. Rowe/Mr. Collins
EP24/Mr. Lee Jones
ED12/Mr. Kennel
EC13/Mr. Milner
ED12/Mr. Shelton
EC22/Mr. Sims
EL54/Mr. Singley/Mr. Craighead

ATTENDANCE LIST - HEAO-B ACDS Ad Hoc Review Team

August 10, 1976

Name	Organization	Phone
George B. Doane III	EC21	3-1418
Hans F. Kennel	ED12	3-4718
Bob Wolf	EE71	3-4217
Herman Hight	EL04	3-5222
Robert Cox	M&S/EL04	772-3411
R. Milner	EC13	3-4638
R. Sims	EC22	3-0795
M. E. Singley	EL54	3-2713
Robert J. Rowe	EF15	3-3578
Sherman M. Seltzer	ED12	3-4580
Doc Carlile	HA23	3-1830

Enclosure

National Aeronautics and
Space Administration

George C. Marshall Space Flight Center
Marshall Space Flight Center, Alabama
35812

NASA

Reply to Attn of: ED22

August 12, 1976

TO: Addressees

FROM: ED22/Mr. Green, Systems Dynamics Laboratory

SUBJECT: Minutes of August 12, 1976, HEAO-B ACDS Ad Hoc Review Team Meeting

The scheduled review team meeting was held at 8:00 a.m., in the MIC room, Bldg. 4487, and was chaired by Dr. Seltzer.

The chair presented, distributed and discussed as necessary the following six items.

1. Minutes of the Aug. 10, 1976, meeting.

2. Letter EE71-393-76 by R. Thomas Recio re HEAO-B Targeting.

3. Action Item Log.

4. Calendar of events.

5. Letter EE71-390-76 from Mr. Wojtalik to Dr. Lovingood re confirmation of request for Team's existence.

6. Second draft of the Team Charter.

The bulk of the time was taken up by a presentation of Mr. Hans Kennel. He presented a detailed explanation of the maneuvering schemes of the HEAO-B attitude control system. Emphasis was placed on the scheme for control and the software implementation thereof (generally at the detailed flow chart level). A number of discussions were engendered by this presentation. Among them were various relationships between the coordinate systems involved and the determination thereof.

Mr. Kennel has begun checking on the action items assigned him last time on the possible FPTA influence on the X-axis. He checked with TRW who is still checking (again) with AS&E. More data are needed to proceed. Various in-house contacts were generated for Mr. Kennel at the meeting. Further word on this issue will be forthcoming.

In Dr. Seltzer's absence, Dr. Doane will chair the meetings of the week of August 16 which will include an extraordinary meeting on the eighteenth to hear a presentation by SAO representatives. Team members who would like to bring others who would benefit from the presentation should do so.

C. E. Green

APPROVAL:

Sherman M. Seltzer
Chairman, HEAO-B ACDS
Review Team

Enclosure
Attendance List

Addressees:
EE71/Mr. Wojtalik
EC01/Mr. Moore
ED01/Dr. Lovingood
ED01/Dr. Worley
EL01/Dr. Thomason
EP01/Mr. McCool
ACDS Team Members
EC21/Dr. Doane
ED22/Mr. Green
EL04/Mr. Hight/Mr. Cox
EF15/Mr. Rowe/Mr. Collins
EP24/Mr. Lee Jones
ED12/Mr. Kennel
EC13/Mr. Milner
ED12/Mr. Shelton
EC22/Mr. Sims
EL54/Mr. Singley/Mr. Craighead

ATTENDANCE LIST - HEAB-B ACDS Ad Hoc Review Team

August 12, 1976

Name	Organization	Phone
Hans F. Kennel	ED12	453-4718
C. R. Sims	EC22	453-0795
R. Milner	EC13	453-4638
H. Shelton	ED12	453-4718
M. E. Singley	EL54	453-2713
R. L. Cox	M&S/EL04	772-3411
H. Hight	EL04	453-5222
George B. Donae III	EC21	453-1418
Robert J. Rowe	EF15	453-3578
Bob Wolf	EE71	453-4217
Sherman Seltzer	ED12	453-4580

Enclosure

National Aeronautics and
Space Administration

George C. Marshall Space Flight Center
Marshall Space Flight Center, Alabama
35812

NASA

Reply to Attn of ED22

August 19, 1976

TO: Addressees

FROM: ED22/Mr. Green, Systems Dynamics Laboratory

SUBJECT: Minutes of August 17, 1976, HEAO-B ACDS Ad Hoc Review Team Meeting

The August 17 Ad Hoc Review Team Meeting was held at 8 a.m. in the Executive Conference Room, Building 4487. Dr. George Doane was acting chairman.

The action item list was discussed. Action item 16 was closed by Bob Wolf's answer that the requirement for maintaining alignment to ±1° of the sun line prevented a need for further thermal analysis. Interim results for action item 17 were discussed. Mr. Kennel commented that the constraint of ±1° of the sun line can be maintained during rotation of the FPTA if the inertial estimate of 56 slug-ft^2 is not significantly exceeded. Action item 13 was considered closed since there were no required changes to the team charter.

Harvey Shelton's presentation on guidance and control laws was rescheduled to August 19. The hardware people, led by Bob Sims, filled the break with a status on ACDS ancillary equipment. Mr. Sims stated that the sun sensors are identical to those on HEAO-A, so they were not discussed. He reported that the rate gyro assembly is also identical to HEAO-A. The status of the gyro is that the qualification unit completed environmental test at Bendix. Bendix has measured the voltage sensitivity of the qual unit to be 0.005 degree/hour volt which is acceptable to the principal investigator.

Collier Rawls reported on the Honeywell star tracker and sun shade. The tracker spec calls for a sensitivity of an eighth magnitude star. The sun shade design is verified by analysis only because ground test facilities are expensive and difficult. The first flight star tracker is also used as the qualification unit.

John Burch discussed the Sperry reaction wheel assembly. Questions arose as whether minimum guaranteed torque is 17- or 20-inch ounces. Mr. Burch was asked to clear up the uncertainties on the speed vs torque curves. The first flight reaction wheel assembly again is the qualification unit.

Clyde Jones reviewed the reaction wheel assembly electronics. He was asked to get a good model of the transfer function (current vs. torque). Mr. Jones expressed a concern that the TRW RWA electronics designers were no longer working on HEAO.

The next review team meeting is scheduled for August 19.

C. E. Green

C. E. Green

APPROVAL:

Sherman M. Seltzer

Sherman M. Seltzer
Chairman, HEAO-B ACDS
Review Team

Addressees:
EE71/Mr. Wojtalik
EC01/Mr. Moore
ED01/Dr. Lovingood
ED01/Dr. Worley
EL01/Dr. Thomason
EP01/Mr. McCool
ACDS Team Members
- EC21/Dr. Doane
- ED22/Mr. Green
- EL04/Messrs. Hight/Cox
- EF15/Messrs. Rowe/Collins
- EP24/Mr. Lee Jones
- ED12/Mr. Kennel
- EC13/Mr. Milner
- ED12/Mr. Shelton
- EC22/Mr. Sims
- EL54/Messrs. Singley/Craighead

National Aeronautics and
Space Administration

George C. Marshall Space Flight Center
Marshall Space Flight Center, Alabama
35812

NASA

Reply to Attn of: ED22

August 23, 1976

TO: Addressees

FROM: ED22/Mr. Green, Systems Dynamics Laboratory

SUBJECT: Minutes of August 19, 1976, HEAO-B ACDS Ad Hoc Review Team Meeting

The August 19 review team meeting was held at 8 a.m. in the Executive Conference Room, Building 4487, chaired by Dr. Doane.

Minutes of the August 17 meeting were distributed and discussed. Bob Wolf announced that the Smithsonian Astrophysical Observatory (SAO) people expect to have a representative here Wednesday, August 25, to discuss the ACDS requirements with the review team. The SAO meeting is scheduled for 1 p.m. in the Executive Conference Room.

The remainder of the meeting was taken up with a presentation by Harvey Shelton. He discussed the guidance and control laws and the various ACDS operational modes. Mr. Shelton pointed out the ambiguity of the jitter requirement and probability terms as used in the observatory specification. He expects to submit a RID on this at the CDR. Mr. Shelton concluded by enumerating his HEAO-B pointing stability concerns. They are:

- Lack of analysis model verification
- Lack of nonlinear analysis
- Lack of flexible body analysis detail
- Lack of error budgets for celestial point
- Lack of contractural requirement to document software/hardware dynamic verification.

A list of the meeting attendees is enclosed.

C. E. Green

APPROVAL:

Sherman M. Seltzer
Chairman, HEAO-B ACDS
Review Team

Enclosure

Addressees:
EE71/Mr. Wojtalik
EC01/Mr. Moore
ED01/Dr. Lovingood
ED01/Dr. Worley
EL01/Dr. Thomason
EP01/Mr. McCool
ACDS Team Members
EC21/Dr. Doane
ED22/Mr. Green
EL04/Messrs. Hight/Cox
EF15/Messrs. Rowe/Collins
EP24/Mr. Lee Jones
ED12/Mr. Kennel
EC13/Mr. Milner
ED12/Mr. Shelton
EC22/Mr. Sims
EL54/Messrs. Singley/Craighead

Attendee List, HEAO-B ACDS Ad Hoc Review Team Meeting, Aug. 19, 1976

G. B. Doane, III
H. F. Kennel
R. K. Wolf
R. L. Cox
C. R. Sims
R. W. Milner
M. E. Singley
H. L. Shelton

National Aeronautics and
Space Administration

George C. Marshall Space Flight Center
Marshall Space Flight Center, Alabama
35812

NASA

Reply to Attn of ED22

August 24, 1976

TO: Addressees

FROM: ED22/Mr. Green, Systems Dynamics Laboratory

SUBJECT: Minutes of Aug. 24, 1976, HEAO-B ACDS Ad Hoc Review Team Meeting

The Aug. 24, 1976, Ad Hoc Review Team Meeting was held at 8:00 a.m. in the Executive Conference Room, Building 4487. Dr. Sherman Seltzer chaired the meeting.

The following documents were distributed.

Minutes of the Aug. 17 and 19 meetings

Updated schedule

Proposed topic list for upcoming TRW RWEA telecon

Preliminary Agenda for the HEAO-B ACDS CDR

Verification Plans for HEAO-A (including test results)

List of software documents from Mr. Hight

Mr. Lee Jones presented the RCS for HEAO-B pointing out its differences from HEAO-A.

Mr. Milner then gave a presentation on the electrical power system.

Considerable discussion encompassing all of the above documents and presentations resulted in the following new action items (old action items were discussed but none closed out).

Change title of third page of proposed ACDS CDR Agenda	Mr. Wolf
Verify adequacy of time on Agenda for software review	Mr. Wolf

See why Sept. 17 was set as a final date for the HEAO-A ACDS test results document review	Mr. Wolf
Review of ACDS test results document	Mr. Shelton/ Mr. Cox
Updated handout re the RCS presentation to be furnished	Mr. Jones
Upon how many maneuvers per time is the power profile based?	Mr. Milner
Was HEAO-A ACDS review team recommendation re LPL and undervoltage mode switching implemented?	Mr. Wolf

The next Review Team Meeting is scheduled for August 25, 1976.

for C. E. Green

APPROVAL:

Sherman M. Seltzer
Chairman, HEAO-B ACDS
Review Team

Addressees:
EE71/Mr. Wojtalik
EC01/Mr. Moore
ED01/Dr. Lovingood
ED01/Dr. Worley
EL01/Dr. Thomason
EP01/Mr. McCool
ACDS Team Members
EC21/Dr. Doane
ED22/Mr. Green
EL04/Messrs. Hight/Cox
EF15/Messrs. Rowe/Collins
EP24/Mr. Lee Jones
ED12/Mr. Kennel
EC13/Mr. Milner
ED12/Mr. Shelton
EL54/Messrs. Singley/Craighead
EC22/Mr. Sims

National Aeronautics and
Space Administration

George C. Marshall Space Flight Center
Marshall Space Flight Center, Alabama
35812

NASA

Reply to Attn of: ED22

August 26, 1976

TO: Addressees

FROM: ED22/Mr. Green, Systems Dynamics Laboratory

SUBJECT: Minutes of Aug. 25, 1976, HEAO-B ACDS Ad Hoc Review Team Meeting

The August 25 review team meeting was held at 8:00 a.m. in the Executive Conference Room, Building 4487, chaired by Dr. Seltzer.

A discussion of the schedule showed that Mr. Jim Powers was called out of town. His presentation will be rescheduled; possibly to Aug. 31 at 9:00 a.m. The telecon with TRW on the RW model question has been rescheduled for the 31st also (at 10:30 a.m. in the MIC, Building 4487).

The following handouts were distributed.

Minutes of the 8-19-76 meeting
New Action Item Log
New Schedule
Mr. Recio's Action Item Log

The action list was discussed with item 14 being closed out.

The main reason for this special meeting was to hear Mr. Recio and Mr. Kurtz express their questions and reservations concerning the amount of observing time that may be lost because of ambiguous guide star sightings. Ambiguous because the star catalog in use only catalogs about 250,000 stars and also because of unknown structural dynamics induced perturbations imparted to the star tracker - RGA coordinate system relationships e.g. "hotdogging." TRW has a number of action items they are working to help scope the problem.

The team could not identify immediately a group at MSFC studying the structural dynamics problem in depth. An effort may be made to do so.

for C. E. Green

APPROVAL:

Sherman M. Seltzer
Chairman, HEAO-B ACDS
Review Team

Enclosure
Attendance List

Addressees:
EE71/Mr. Wojtalik
EC01/Mr. Moore
ED01/Dr. Lovingood
ED01/Dr. Worley
EL01/Dr. Thomason
EP01/Mr. McCool
ACDS Team Members
EC21/Dr. Doane
ED22/Mr. Green
EL04/Mr. Hight/Mr. Cox
EF15/Mr. Rowe/Mr. Collins
EP24/Mr. Lee Jones
ED12/Mr. Kennel
EC13/Mr. Milner
ED12/Mr. Shelton
EC22/Mr. Sims
EL54/Mr. Singley/Mr. Craighead

ATTENDANCE LIST - HEAO-B ACDS Ad Hoc Review Team

August 25, 1976

Name	Organization
S. M. Seltzer	ED12
R. J. Rowe	EF15
M. E. Singley	EL54
H. L. Shelton	ED12
R. W. Milner	EC13
R. L. Cox	M&S/EL04
R. Wolf	EE71
T. Recio	EE71
F. Kurtz	EL11
C. R. Sims	EC22
H. F. Kennel	ED12
G. B. Doane III	EC21

Enclosure

National Aeronautics and
Space Administration

George C. Marshall Space Flight Center
Marshall Space Flight Center, Alabama
35812

NASA

Reply to Attn of ED22

August 26, 1976

TO: Addressees

FROM: ED22/Mr. Green, Systems Dynamics Laboratory

SUBJECT: Minutes of August 26, 1976, HEAO-B ACDS Ad Hoc Review Team Meeting

The August 26 review team meeting was held at 8:00 a.m. in the Executive Conference Room, Bldg. 4487, chaired by Dr. Seltzer.

This meeting was somewhat curtailed because Mr. Singely reported in sick: he was to be a major presenter. Thus a tentative rescheduling of his presentation to Aug. 31 at 10:00 a.m. was done.

Mr. Lee Jones closed out his action item to provide copies of his updated (to HEAO-B) viewgraphs. Mr. Jones received a new action item i.e., to verify the position in which the observatory is shipped; horizontal or vertical. This may influence catalytic particle migration into the capillary tube in the thermal standoff area of the RC engines.

Mr. Kennel reported that he is still working on the Lazy Susan moment of inertia value problems. An updated letter from AS&E still seems to contain questionable data and has introduced a new error of 10^8 compared to previous published data. Mr. Wolf is trying to find out who prepared the data.

Ms. Nancy Milly distributed a listing of the ACDS FMEA for HEAO-B. The list revolves around pin/connector failure

modes and propellant leakage failure modes. Mr. Wolf received an action item to check into the connector rationale followed on HEAO e.g. dual pin single connector vs dual connector useage.

C. E. Green

APPROVAL:

Sherman M. Seltzer
Chairman, HEAO-B ACDS
Review Team

Enclosure
Attendance List

Addressees:
EE71/Mr. Wojtalik
EC01/Mr. Moore
ED01/Dr. Lovingood
ED01/Dr. Worley
EL01/Dr. Thomason
EP01/Mr. McCool
ACDS Team Members
EC21/Dr. Doan
ED22/Mr. Green
EL04/Mr. Hight/Mr. Cox
EF15/Mr. Rowe/Mr. Collins
EP24/Mr. Lee Jones
ED12/Mr. Kennel
EC13/Mr. Milner
ED12/Mr. Shelton
EC22/Mr. Sims
E154/Mr. Singley/Mr. Craighead

ATTENDANCE LIST - HEAO-B ACDS Ad Hoc Review Team

August 26, 1976

Name	Organization
S. M. Seltzer	ED12
R. J. Rowe	EF15
H. L. Shelton	ED12
R. L. Cox	M&E/EL04
N. Milly	EL54
R. Wolf	EE71
C. R. Sims	EC22
C. L. Collins	EF15
L. W. Jones	EP24
H. F. Kennel	ED12
G. B. Doane III	EC21

Enclosure

National Aeronautics and
Space Administration

George C. Marshall Space Flight Center
Marshall Space Flight Center, Alabama
35812

NASA

Reply to Attn of: ED22

September 1, 1976

TO: Addressees

FROM: ED22/Mr. Green, Systems Dynamics Laboratory

SUBJECT: Minutes of August 31, 1976, HEAO-B ACDS Ad Hoc Review Team Meeting

The August 31, 1976, Ad Hoc Review Team Meeting was held at 8 a.m. in the MIC room, building 4487, chaired by Dr. Seltzer.

Mr. Bob Sims announced that the scheduled telecon on the reaction wheel models had been cancelled. He had just received several memos that appeared to clear up the questions on the models. Mr. Sims will report on his review of these memoranda as soon as possible.

The following documents were distributed:

Updated review team schedule
Revised action item log

The probability that the ACDS CDR would slip into October was discussed. Action items 26 and 36 were closed.

Mr. Hermon Hight made a presentation on the HEAO-b flight software. This subject is covered in TRW document #D01137, "Flight Program Requirements Document for HEAO-B ACDS," dated June 21, 1976, available in the repository.

Mr. Jim Power, HEAO Mission B Manager, gave a talk on the HEAO-B systems requirements. He defined the ACDS driving requirements as being able to point the experiment anywhere to within 1 arc minute with a stability of 30 arc seconds per hour and a change rate of 1 arc second in any one second.

Mr. Maurice Singley discussed the ground attitude determination system. He pointed out the problem of the drift rate of the gyros creates.

The review team elected to change the meeting time to 8:15 a.m. for future meetings. The next Review Team Meeting is scheduled for September 2, 1976.

C. E. Green

APPROVAL:

Sherman M. Seltzer
Chairman, HEAO-B ACDS
Review Team

Addressees:
EE71/Mr. Wojtalik
EC01/Mr. Moore
ED01/Dr. Lovingood
ED01/Dr. Worley
EL01/Dr. Thomason
EP01/Mr. McCool
ACDS Team Members
EC21/Dr. Doane
ED22/Mr. Green
EL04/Messrs. Hight/Cox
EF15/Messrs. Rowe/Collins
EP24/Mr. Lee Jones
ED12/Mr. Kennel
EC13/Mr. Milner
ED12/Mr. Shelton
EL54/Messrs. Singley/Craighead
EC22/Mr. Sims

National Aeronautics and
Space Administration

George C. Marshall Space Flight Center
Marshall Space Flight Center, Alabama
35812

NASA

Reply to Attn of: ED22

September 8, 1976

TO: Addressees

FROM: ED22/Mr. Green, Systems Dynamics Laboratory

SUBJECT: Minutes of September 2, 1976, HEAO-B ACDS AD Hoc Review Team Meeting

The September 2, 1976, Ad Hoc Review Team Meeting, chaired by Dr. Seltzer, was held at 8:15 a.m. in the Executive Conference Room, building 4487.

A revised action item list was distributed and discussed. Items 28 and 29 were closed. Mr. Shelton accepted an action to draft an engineering change notice on jitter definition to close item 25. Mr. Carlile explained that target selection is controlled by the Stored Command Programmer to close item 37.

An updated review team schedule was distributed. Rescheduling of the ACDS CDR until October 19 and 20 was discussed. Minutes of the August 31 meeting were distributed.

Preparation of RID's for the CDR was discussed. Mr. Kennel is preparing a RID on a procedure for updating the rate gyro. Mr. Milner discussed the still existing problem of the long pulse logic uncovered during the HEAO-A review. A concern was expressed that verification test data are not a contract item.

A proposed final HEAO-B Review Team report format was presented by Dr. Seltzer and discussed by the team.

The next Review Team Meeting is scheduled for September 9, 1976.

C. E. Green

APPROVAL:

Sherman M. Seltzer
Chairman, HEAO-B ACDS
Review Team

Addressees: see page 2

Addressees:
EE71/Mr. Wojtalik
EC01/Mr. Moore
ED01/Dr. Lovingood
ED01/Dr. Worley
EL01/Dr. Thomason
EP01/Mr. McCool
ACDS Team Members
    EC21/Dr. Doane
    ED22/Mr. Green
    EL04/Messrs. Hight/Cox
    EF15/Messrs. Rowe/Collins
    EP24/Mr. Lee Jones
    ED12/Mr. Kennel
    EC13/Mr. Milner
    ED12/Mr. Shelton
    EL54/Messrs. Singley/Craighead
    EC22/Mr. Sims

September 2, 1976

Attendee List:

C. Green/ED22
H. F. Kennel/ED12
R. L. Cox/M&S/EL04
C. R. Sims/EC22
R. W. Milner/EC13
H. L. Shelton/ED12
M. E. Singley/EL54
R. J. Rowe/EF15
S. M. Seltzer/ED12
D. Carlile/HA23
H. H. Hight/EL04

National Aeronautics and
Space Administration

George C. Marshall Space Flight Center
Marshall Space Flight Center, Alabama
35812

Reply to Attn of: ED22

September 13, 1976

TO: Addressees

FROM: ED22/Mr. Green, Systems Dynamics Laboratory

SUBJECT: Minutes of September 9, 1976, HEAO-B ACDS Ad Hoc Review Team Meeting

The September 9 Ad Hoc Review Team Meeting, chaired by Dr. Seltzer, was held at 8:15 a.m., Executive Conference Room, building 4487. A list of the attendees is enclosed.

The following documents were distributed:

- Note to Dr. Seltzer from Mr. Kennel closing action item 17
- Revised meeting schedule for September
- Updated action item list
- Minutes of the September 2 review team meeting
- Draft of the HEAO-B ACDS review team final report outline

Mr. Kennel's note on action item 17 concerning mementum versus time analysis/simulation status was discussed, and the action was closed. The note also closed item 20.

Mr. Sims reported on his findings concerning the accuracy and reliability numbers for the z-sun sensor. His report closed action item 27.

The final review team report outline was discussed. The concensus was that additional time was required for further study and comments before finalizing the outline.

Mr. Sims reviewed the component specifications for the RGA, SSA, RWA, RWEA and STA. He concluded that no RID's or comments were required on these components at this time.

The next meeting is scheduled for 8:15 a.m., September 13, 1976, in the Executive Conference Room, building 4487.

C. E. Green

APPROVAL:

Sherman M. Seltzer
Chairman, HEAO-B ACDS
Review Team

Addressees:
EE71/Mr. Wojtalik
EC01/Mr. Moore
ED01/Dr. Lovingood
ED01/Dr. Worley
EL01/Dr. Thomason
EP01/Mr. McCool
ACDS Team Members
- EC21/Dr. Doane
- ED22/Mr. Green
- EL04/Messrs. Hight/Cox
- EF15/Messrs. Rowe/Collins
- EP24/Mr. Lee Jones
- ED12/Mr. Kennel
- EC13/Mr. Milner
- ED12/Mr. Shelton
- EL54/Messrs. Singley/Craighead
- EC22/Mr. Sims

Attendee List - September 9, 1976

C. Green	ED22
S. Seltzer	ED12
R. Rowe	EF15
H. Hight	EL04
H. Shelton	ED12
R. Wolf	EE71
R. Sims	EC22
H. Kennel	ED12
I. Morgan	EC22
C. Carlile	HA23
L. Jones	EP24
G. Doane III	EC21

D R A F T

HEAO-B ACDS CDR REVIEW TEAM FINAL OUTLINE

1. Team mission (charter)
2. Team composition
3. Team approach to meet mission
   a. Accomplishments
   b. Action list
4. Team conclusions
   o Include test results
   a. Assume each item O.K.
   b. Recommend review process for test results
5. Decomposition of ACDS

		(Responsible Individual)
a.	Hardware	
	(1) RGA	(Sims)
	(2) RWA	(Sims)
	(3) RWEA	(Sims)
	(4) SSA	(Sims)
	(5) TA	(Rowe)
	(6) DPA	(Rowe)
b.	Structural dynamics	(Green)
c.	Pointing, maneuvering, & momentum management	(Kennel)
d.	G&C laws, stability, & operational modes	(Shelton)

e. Flight software (Hight, Rowe, Cox)

f. Allied subsystems affecting ACDS

(1) RCS (Jones)

(2) Electrical system (Milner)

(3) Ground software (Singley)

(4) STA (Sims)

(5) Command & data handling subsystem (Rowe will find out)

6. RGA (Sims)

a. Purpose and operation

b. Similarity and differences with HEAO-A

c. Ability to perform properly (base on HEAO-A if applicable)

d. "Show-stoppers"

(1) Describe

(2) Action or recommended action, such as RID, ECR

e. Concerns

(1) Describe

(2) Action--- same as d above

7. RWA (Sims)

⋮

8. RWEA (Sims)

⋮

9. SSA (Sims)

⋮

10. TA (Rowe)

⋮

11. DPA (Rowe)

⋮

12. Structural dynamics (Green)

⋮

13. Pointing, maneuvering, & momentum management (Kennel)

⋮

14. G&C laws, stability, and operational modes (Shelton)

⋮

15. Flight software (Hight, Rowe, Cox)

⋮

16. RCS (Jones)

⋮

17. Electrical system (Milner)

⋮

18. Ground software (Singley)

⋮

19. STA (Sims)

⋮

20. Command and data handling subsystem (Rowe will find out)

⋮

21. Conclusions

Appendices

1.

⋮

National Aeronautics and
Space Administration

George C. Marshall Space Flight Center
Marshall Space Flight Center, Alabama
35812

NASA

Reply to Attn of: ED22

September 16, 1976

TO: Addressees

FROM: ED22/Mr. Green, Systems Dynamics Laboratory

SUBJECT: Minutes of September 13, 1976, HEAO-B ACDS Ad Hoc Review Team Meeting

The September 13, 1976, Review Team Meeting was held at 8:15 a.m. in the Executive Conference Room, Building 4487. The meeting was chaired by Dr. Seltzer.

An updated review team schedule was distributed and discussed. Portions of the HEAO-B Observatory System Specification were discussed and the review of the ACDS Subsystem Specification, S57-29A, was begun.

Mr. Fred Wojtalik, HEAO Chief Engineer, presented a report on the completed and pending actions resulting from the HEAO-A ACDS review. A summary of the HEAO-A review team findings and the current disposition of each is enclosed. Mr. Wojtalik was made aware of the team's unsuccessful effort to obtain an experiment briefing by SAO. He offered to support a two-man trip by team members to SAO to obtain the desired information.

A list of the September 13 meeting attendees is enclosed.

The next scheduled meeting will be September 16, 1976, at 8:15 a.m.

C. E. Green

APPROVAL:

Sherman M. Seltzer
Chairman, HEAO-B ACDS
Review Team

Addressees: (see page 2)

Addressees:
EE71/Mr. Wojtalik
EC01/Mr. Moore
ED01/Dr. Lovingood
ED01/Dr. Worley
EL01/Dr. Thomason
EP01/Mr. McCool
ACDS Team Members
    EC21/Dr. Doane
    ED22/Mr. Green
    EL04/Messrs. Hight/Cox
    EF15/Messrs. Rowe/Collins
    EP24/Mr. Lee Jones
    ED12/Mr. Kennel
    EC13/Mr. Milner
    ED12/Mr. Shelton
    EL54/Messrs. Singley/Craighead
    EC22/Mr. Sims

Attendee List, September 13, 1976

S. Seltzer	ED12
C. Green	ED22
G. Doane III	EC21
C. Sims	EC22
H. Kennel	ED12
R. Milner	EC13
H. Shelton	EC12
H. Hight	EL04
R. Rowe	EF15
M. Singley	EL54
R. Cox	EL04
R. Wolf	EE71

SUMMARY OF ACDS REVIEW TEAM FINDINGS

(HEAO-A)

Recommendations/ Comments/Concerns	Remarks	Disposition
1. No governing CEI for pointing accuracy in FSA	CEI (3.1.1.2.5.2.3) specifies requirement (average bus power)	See RID IA from HEAO-B PDR
2. No governing CEI for pointing accuracy in NSA	CEI (3.1.1.2.5.2.1) specifies 7° half cone angle (Sunpoint is NSA)	Correct nomenclature is required (SCN is being worked)
3. Vehicle stability margins of safety have not been demonstrated by a simulation which contains a DPA with an actual flight program	TRW will provide data and discuss at MSFC week of September 30, 1976	
4. Hardware test data not available to validate simulated models	TRW will provide data and discuss at MSFC week of September 30, 1976	
5. Time response simulation data not provided for analysis	TRW will provide data and discuss at MSFC week of September 30, 1976	
6. Recommend crossover valve be closed during launch and open during normal spacecraft operations	TRW memo (HEAO-76-310-025) recommends to launch and operate on-orbit with valve closed.	Change on-orbit procedures
7. Identify difference in RCS consumption between LPL baseline and a proposed approach to switch to the secondary thrusters immediately upon receipt of LPL.	TRW will discuss at MSFC week of September 30, 1976	

Recommendations/ Comments/Concerns	Remarks	Disposition
8. Efforts unsuccessful for performance of RGA performance vacuum test	Test plan being formulated between Bendix, TRW & MSFC	Test will be performed at MSFC October 76-Jan. 77
9. RGA and STA hardware analysis results in lower than desirable confidence in these component	Project decision to use SAS-C trackers	RGA qual test results will be made available for evaluation
10. Lack of mission operation details for ACDS failure analysis and anomaly resolution		Mission operations procedures will be available Oct 76-Jan 77 for MSFC review
11. Recommend that as soon as an LPL signal is given the onboard logic switch off the primary thrusters and switch on secondary thrusters, plus the ACDS commanded to FSA	TRW will discuss at MSFC week of September 30, 1976	
12. Provide analysis to demonstrate validity of initial acquisition scheme. (including concern for initial star identification)	TRW will provide data and discuss at MSFC week of September 30, 1976	
13. Lack of detailed documentation of the downlink telemetry	Data should be available in data base	Contact A. Jackson/EF34
14. IP&CL does not explain physical meaning of engineering telemetry data for ACDS evaluation	IP&CL not intended to provide explanation	Mission Operations procedures will contain evaluation criteria for ACDS

Recommendations/ Comments/Concerns	Remarks	Disposition
15. Insufficient information available to evaluate the total ground data system integration effort		
16. No plans for contractor support of DPA software after November 1976	TRW PCP 021 has been disapproved and a new PCP will be provided by TRW	
17. Unavailability of detailed software change and problem report documentation		Data is being provided to H. Hight, EL04
18. Recommend that MSFC have non-voting member on TRW software control board		Desirable to have MSFC representation at selected meetings. TRW agreeable.

National Aeronautics and
Space Administration

George C. Marshall Space Flight Center
Marshall Space Flight Center, Alabama
35812

NASA

Reply to Attn of ED22

Sept. 17, 1976

TO: Addressees

FROM: ED22/Mr. Green, Systems Dynamics Laboratory

SUBJECT: Minutes of September 16, 1976, HEAO-B ACDS Ad Hoc Review Team Meeting

The September 16, 1976, Review Team Meeting was held at 8:15 am in the Executive Conference Room, Building 4487. The meeting was chaired by Dr. Seltzer.

The following listed handouts were distributed.

Record of Comments on Publications
New Action Item Log
Presentation Material on SCP (Re Action Item 40)
Meeting Minutes, HEAO-B Observatory System PDR

Action item 42 was discussed and closed out. A presentation on action item 40 was given by Mr. Rowe. This presentation generated additional questions from Mr. Wolf. Action item 38 was closed out by Mr. Sims reporting on the Honeywell reply (2 arcmin per time second). Mr. Shelton discussed the definition of jitter re action item number 39. The accepted HEAO-B definition of jitter has been established formally; rate does not enter the definition. Jitter limit is defined here as one arc sec motion in one time second.

Additional discussions on other action items occurred.

The Team spent the remainder of the morning continuing its review of the HEAO-B ACDS subsystem specification.

for C. E. Green

APPROVAL:

Sherman M. Seltzer
Chairman, HEAO-B ACDS
Review Team

Addressees:
EE71/Mr. Wojtalik
EC01/Mr. Moore
ED01/Dr. Lovingood
ED01/Dr. Worley
EL01/Dr. Thomason
EP01/Mr. McCool
ACDS Team Members
EC21/Dr. Doane
ED22/Mr. Green
EL04/Messrs. Hight/Cox
EF15/Messrs. Rowe/Collins
EP24/Mr. Lee Jones
ED12/Mr. Kennel
EC13/Mr. Milner
ED12/Mr. Shelton
EL54 Messrs. Singley/Craighead
EC22/Mr. Sims

9-16-76 HEAO-ACDS Mtg.

G. B. Doane, III	EC21	453-1418
M. F. Kennel	ED12	453-4718
R. L. Cox	M&S/EL04	772-3411
C. R. Sims	EC22	453-0795
R. W. Milner	EC13	453-4638
L. W. Jones	EP24	453-1242
H. L. Shelton	ED12	453-4718
R. J. Rowe	EF15	453-3578
S. Seltzer	ED12	
Maurice Singley		
H. H. Hight		
R. K. Wolf		
Claude Green		

National Aeronautics and
Space Administration

George C. Marshall Space Flight Center
Marshall Space Flight Center, Alabama
35812

NASA

Reply to Attn of: ED22-76

September 21, 1976

TO: Addressees

FROM: ED22/Mr. Green, Systems Dynamics Laboratory

SUBJECT: Minutes of September 20, 1976, HEAO-B ACDS Ad Hoc Review Team Meeting

The September 20, 1976, Review Team Meeting was held at 8:15 a.m. in the Executive Conference Room, Building 4487. Dr. Seltzer chaired the meeting.

The team agreed to limit the agenda for this meeting to a review of the ACDS specification. The team concluded that the ACDS specification should be changed to be consistent with the nomenclature used in the hardware specification. The error budget was discussed and found to be incomplete.

The list of September 20 attendees is enclosed. The next meeting is scheduled for September 28 at 8:15 a.m. in the Executive Conference Room.

C. E. Green

C. E. Green

APPROVAL:

Sherman M. Seltzer

Sherman M. Seltzer
Chairman, HEAO-B ACDS
Review Team

cc: (See page 2)

AddresseesL
EE71/Mr. Wojtalik
EC01/Mr. Moore
ED01/Dr. Lovingood
ED01/Dr. Worley
EL01/Dr. Thomason
EP01/Mr. McCool
ACDS Team Members
EC21/ Dr. Doane
ED22/Mr. Green
EL04/Messrs. Hight/Cox
EF15/Messrs. Rowe/Collins
EP24/Mr. Lee Jones
ED12/Mr. Kennel
EC13/Mr. Milner
ED12/Mr. Shelton
EL54/Messrs. Singley/Craighead
EC22/Mr. Sims

ACDS Team Meeting Attendees, September 20, 1976

S. Seltzer, ED12
G. Doane III, EC21
H. Kennel, ED12
C. Sims, EC22
R. Cox, M&S/EL04
L. Jones, EP24
R. Milner, EC13
H. Shelton, ED12
H. Hight, EL04
R. Rowe, EF15
C. Green, ED22

National Aeronautics and
Space Administration

George C. Marshall Space Flight Center
Marshall Space Flight Center, Alabama
35812

NASA

Reply to Attn of: ED22

October 5, 1976

TO: Addressees

FROM: ED22/Mr. Green, Systems Dynamics Laboratory

SUBJECT: Minutes of September 28, 1976, HEAO-B ACDS Ad Hoc Review Team Meeting

The September 28 Ad Hoc Review Team Meeting, chaired by Dr. Seltzer, was held at 8:15 a.m. in the Executive Conference Room, Building 4487. An attendee list is enclosed.

A revised meeting schedule was distributed and discussed. It was noted that Messrs. Hoffman and Rose of TRW would meet with the team for an ACDS pre-CDR on Wednesday, October 6. Both would also attend a maneuvering meeting on October 7.

The action item list was reviewed. Item 24, concerning the TRW reaction wheel model, was left open pending the current reviews and meetings. Item 35 was closed by verifying that all ACDS equipment connectors had been qualified by previous flight or would be qualified specifically for HEAO-B. Item 43, concerning hardware responsibilities, was closed by the decision to state the review assumptions in the final report.

The ACDS CDR package will be reviewed at the next review team meeting scheduled for 8:15 a.m., Monday, October 4, MIC Room, Building 4487.

C. E. Green

APPROVAL:

Sherman M. Seltzer
Chairman, HEAO-B ACDS
Review Team

Addressees: see page 2

Addressees:
EE71/Mr. Wojtalik
EC01/Mr. Moore
ED01/Dr. Lovingood
ED01/Dr. Worley
EL01/Dr. Thomason
EP01/Mr. McCool
ACDS Team Members
    EC21/Dr. Doane
    ED22/Mr. Green
    EL04/Messrs. Hight/Cox
    EF15/Messrs. Rowe/Collins
    EP24/Mr. Lee Jones
    ED12/Mr. Kennel
    EC13/Mr. Milner
    ED12/Mr. Shelton
    EL54/Messrs. Singley/Craighead
    EC22/Mr. Sims

Attendee List, September 28, 1976

C. Green/ED22
H. F. Kennel/ED12
C. R. Sims/EC22
R. K. Wolf/EE71
L. W. Jones/EP24
R. W. Milner/EC13
H. L. Shelton/ED12
Hermon Hight/EL04
Bob Rowe/EF15
George B. Doane/EC21

National Aeronautics and
Space Administration

George C. Marshall Space Flight Center
Marshall Space Flight Center, Alabama
35812

NASA

Reply to Attn of: ED12 October 26, 1976

TO: Addressees

FROM: ED12/Dr. Seltzer, Systems Dynamics Laboratory

SUBJECT: Minutes of October 26, 1976, HEAO-B ACDS Ad Hoc Review Team Meeting

The HEAO-B ACDS Review Team chaired by Dr. Seltzer met Tuesday, October 26, 1976, in the Executive Conference Room of Building 4487.

The Team used the time to explore at length the outline of the Final Report. Various parts of the outline were assigned to the various team members.

The Team also reviewed the action item list to ascertain that no open items remain.

The Team will meet again Thursday, October 28, 1976, to review progress on the report.

Sherman M. Seltzer
Chairman, HEAO-B ACDS
Review Team

Addressees:
EE71/Mr. Wojtalik
EC01/Mr. Moore
ED01/Dr. Lovingood
ED01/Dr. Worley
EL01/Dr. Thomason
EP01/Mr. McCool
ACDS Team Members
- EC21/Dr. Doane
- ED22/Mr. Green
- EL04/Messrs. Hight/Cox
- EF15/Messrs. Rowe/Collins
- EP24/Mr. Lee Jones
- ED12/Mr. Kennel
- EC13/Mr. Milner
- ED12/Mr. Shelton
- EL54/Messrs. Singley/Craighead
- EC22/Mr. Sims

Oct 26, 1976 — ACDS Mtg.

George B. Doane, III	EC21
Hans F. Kennel	ED12
C. R. Sims	EC22
C. L. Collins	EF15
Lee W. Jones	EP24
M. E. Singley	EL54
R. W. Milner	EC13
H. L. Shelton	ED12
H. H. Hight	EL04
R. J. Rowe	EF15
Sherman Seltzer	ED12

National Aeronautics and
Space Administration

George C. Marshall Space Flight Center
Marshall Space Flight Center, Alabama
35812

NASA

Reply to Attn of: ED22

TO: Addressees

FROM: ED22/Mr. Green, Systems Dynamics Laboratory

SUBJECT: Minutes of October 28, 1976, HEAO-B ACDS Ad Hoc Review Team Meeting

The HEAO-B ACDS Review Team, chaired by Dr. Seltzer, met October 28 in the Executive Conference Room, Building 4487.

Copies of the RID's submitted to TRW at the HEAO-B ACDS CDR were distributed to Team members.

The Team spent the time reviewing the TRW Action Item and Agreement List generated during the October 19-20 HEAO-B ACDS CDR.

Bob Wolf was assigned an action to obtain documentation showing the disposition of all RID's submitted by the Team at the CDR.

The next Team meeting is scheduled for Thursday, November 4, in the Executive Conference Room. The purpose of the meeting is to begin the assembly of the Team's final report.

C. E. Green

APPROVAL:

for Sherman M. Seltzer
Chairman, HEAO-B ACDS
Review Team

Addressees:
EE71/Mr. Wojtalik
EC01/Mr. Moore
ED01/Dr. Lovingood
ED01/Dr. Worley
EL01/Dr. Thomason
EP01/Mr. McCool

ACDS Team Members:
EC21/Dr. Doane
ED22/Mr. Green
EL04/Messrs. Hight/Cox
EF15/Messrs. Rowe/Collins
EP24/Mr. Lee Jones
ED12/Mr. Kennel
EC13/Mr. Milner
ED12/Mr. Shelton
EL54/Messrs. Singley/Craighead
EC22/Mr. Sims

Attendee List — Oct. 28, 1976

C. Green	ED22
Lee Jones	EP24
C. R. Sims	EC22
C. L. Collins	EF15
Paul Craighead	EL54
H. H. Hight	EL04
R. K. Wolf	EE71
R. W. Milner	EC13
H. L. Shelton	ED12
Hans F. Kennel	ED12
R. J. Rowe	EF15
George B. Doane, III	EC21
Sherman Seltzer	ED12

National Aeronautics and
Space Administration

George C. Marshall Space Flight Center
Marshall Space Flight Center, Alabama
35812

NASA

Reply to Attn of: ED22

November 16, 1976

TO: Addressees

FROM: ED22/Mr. Green, Systems Dynamics Laboratory

SUBJECT: Minutes of November 11, 1976, HEAO-B ACDS Ad Hoc Review Team Meeting

The HEAO-B ACDS Review Team, chaired by Dr. George Doane, met November 11 in the MIC Room, building 4487.

The Team discussed the rough draft inputs to the final report with emphasis on the introductory sections. Questions arose on how detailed the final report should be in finished form. Dr. Doane took an action to discuss this question with Dr. Seltzer when he returns from military leave.

No additional Team meetings were scheduled. However, Team members will be required to review subsequent drafts of the report and concur in the final version.

C. E. Green

C. E. Green

APPROVAL:

Sherman M. Seltzer
Chairman, HEAO-B ACDS
Review Team

Enclosure: Attendee List

Addressees:
EE71/Mr. Wojtalik
EC01/Mr. Moore
ED01/Dr. Lovingood
ED01/Dr. Worley
EL01/Dr. Thomason
EP01/Mr. McCool

ACDS Team Members:
EC21/Dr. Doane
ED22/Mr. Green
EL04/Messrs. Hight/Cox
EF15/Messrs. Rowe/Collins
EP24/Mr. Lee Jones
ED12/Mr. Kennel
EC13/Mr. Milner
ED12/Mr. Shelton
EL54/Messrs. Singley/Craighead
EC22/Mr. Sims

Attendee List — Nov. 11, 1976

C. L. Collins	EF15
L. W. Jones	EP24
H. F. Kennel	ED12
C. R. Sims	EC22
R. W. Milner	EC13
R. J. Rowe	EF15
G. B. Doane, III	EC21

APPENDIX K

MEMO ED12-76-66, SELTZER TO WOJTALIK, DATED AUGUST 27, 1976, SUBJECT: "INTERIM REPORT OF HEAO-B ACDS REVIEW TEAM"

National Aeronautics and
Space Administration

George C. Marshall Space Flight Center
Marshall Space Flight Center, Alabama
35812

Reply to Attn of: ED12-76-66

August 27, 1976

TO: EE71/F. Wojtalik

FROM: ED12/S. M. Seltzer, Systems Dynamics Laboratory

SUBJECT: Interim Report of HEAO-B ACDS Review Team

The purpose of this memorandum is to summarize accomplishments of the HEAO-B ACDS Review Team and to indicate our intentions for future accomplishments. You should have been receiving on a regular basis copies of the minutes of each meeting. We hope this memorandum will provide you with an instrument to advise us of any recommended alterations to our approach in a sufficiently timely manner that we can implement them.

You recall that, in the interest of expediency, I took the liberty of convening the first meeting of the Review Team on July 23, 1976 in the absence of written direction (Encl 1). The team consists of essentially the same membership as the HEAO-A ACDS Review Team, representing each of the pertinent S&E organizations (Encl 2). In addition, Bob Wolf (EE71) and C. D. ("Doc") Carlile (HA23) have been invited to participate in our meetings. Bob has been participating vigorously and has been of great assistance to the team; Doc Carlile's attendance and participation has been sparse and limited.

In the absence of a crisp, precise statement of the team's mission from management, the team generated a team charter (Encl 3). Therein we defined the team composition, the team mission, and the ACDS. I reiterate here that we excluded the ground attitude determination system for the reasons I set forth in Enclosure 3.

A summary of our accomplishments to date is set forth chronologically:

July 23: Initial organization and discussion of proposed mission, schedule, team composition.

July 27: Review of HEAO-B ACDS and associated technical documentation by Dale Hoffman (TRW).

July 29: Development of Review Team schedule to enable team to meet its CDR obligation.

August 3: Presentation of HEAO-B ACDS requirements and specifications by Bob Wolf (EE71).

August 5: Presentation of HEAO-B activation events by Maurice Singley (EL54).

August 10: Final review of team charter. Review of ACDS and CEI specs.

August 12: Report on HEAO-B pointing, maneuvering, and momentum management by Hans Kennel (ED12).

August 17: Report on HEAO-B ACDS hardware (Rate Gyro Assembly, Reaction Wheel Assembly and Electronics, and Star Tracker) by Dr. Doane (EC21) and Bob Sims (EC22).

August 19: Report on HEAO-B ACDS G&C laws, stability, and flight modes by H. Shelton (ED12). Report on associated software by Bob Rowe (EF15).

August 24: Report on HEAO-B RCS and its effects on the ACDS by Lee Jones (EP24). Report on HEAO-B Electrical Subsystem and its effects on the ACDS by Bob Milner (EC13).

August 25: Report on criticisms being levelled against HEAO-B ACDS from a targeting viewpoint by Tom Recio (EE71) supported by H. F. Kurtz (EL11).

August 26: Report on critical single point failures that potentially could affect the HEAO-B ACDS by Nancy Milly (EL54).

In addition to the presentations outlined above, certain action items have been levied, worked on, and--in some cases--completed (Encl 4).

Scheduled future activities are outlined below:

August 31: Report on concerns associated with HEAO-B flight software by Hermon Hight (EL04). Report on requirements imposed by scientific experiments by Jim Powers (HA24). If time permits (since this was rescheduled from August 26 due to illness), a report on ground-generated information used by the HEAO-B ACDS by Maurice Singley (EL54). This will

be followed by a telecon between interested S&E members and TRW to define and tear away the existing confusion and misunderstanding concerning reaction wheel dynamic models.

September 2: Discuss drafts of preliminary RID's prepared for the CDR.

The remainder of the time before the CDR will be used to prepare RID's for the CDR and to begin work on the Team's Final Report. It is anticipated that one day during the week of September 13, Dale Hoffman and Dick Rose (both of TRW) will present a pre-CDR to the team, similar to the pre-PDR's and pre-CDR they presented to the Pointing Control Systems Branch (ED12) in the past. This will enable the team to more efficiently organize and--in many cases--obviate the RID's.

After you have had an opportunity to read this document, I would like to talk to you and schedule a presentation by you to the team. We are interested in the status of the HEAO-A ACDS Review Team's findings and would appreciate your advice concerning our forthcoming report.

Sherman M. Seltzer
Chairman, HEAO-B ACDS
Review Team

Enclosures

cc:
EC01/Mr. Moore
ED01/Dr. Lovingood
ED01/Dr. Worley
EL01/Dr. Thomason
EP01/Mr. McCool
ACDS Team Members
EC21/Dr. Doane
ED22/Mr. Green
EL04/Messrs. Hight/Cox
EF15/Messrs. Rowe/Collins
EP24/Mr. Lee Jones
ED12/Mr. Kennel
EC13/Mr. Milner
ED12/Mr. Shelton
EL54/Messrs. Singley/Craighead
EC22/Mr. Sims
EE71/Mr. Wolf

George C. Marshall Space Flight Center
Marshall Space Flight Center, Alabama
35812

Reply to Attn of: ED12-76-58 July 26, 1976

TO: EE71/F. S. Wojtalik

FROM: ED12/S. M. Seltzer, Systems Dynamics Laboratory

SUBJECT: Formation of HEAO-B ACDS Review Team

Because time before the HEAO-B ACDS CDR is short, I have taken the liberty of convening the first meeting of the HEAO-B ACDS Review Team. I have acted on oral direction which I assume will be augmented by written direction.

At the first meeting (July 23, 1976) I presented the material I have enclosed hereto. I need to verify with you my assumed team mission et al. There were a few changes in the composition of the review team. I assume you will ask the Laboratory Directors to name the team members they desire.

I have asked Dale Hoffman to make a presentation to the review team on Tuesday, July 27. He plans to give us a technical description of the HEAO-B ACDS, define the pertinent available documentation, and tell us that pertinent documentation that is forthcoming (and when).

Sherman M. Seltzer
Chairman, HEAO ACDS Review Team

Enclosure
As Stated

ORIGINAL PAGE IS
OF POOR QUALITY

N. SELTZER

1976

S

. LAB

LAB

ORIGINAL PAGE IS
OF POOR QUALITY

George C. Marshall Space Flight Center
Marshall Space Flight Center, Alabama
35812

Reply to Attn of: ED12-76-62

AUG 12 1976

TO: EE71/Fred Wojtalik

FROM: ED12/S. M. Seltzer, Chairman, HEAO-B ACDS Review Team

SUBJECT: HEAO-B ACDS Review Team Charter

Enclosed is the charter for the HEAO-B ACDS Review Team. It has been prepared by the team in an attempt to carefully delineate our responsibilities. Expediency has been included in order to meet the imminent CDR schedule. For instance, we are not looking at the ground attitude determination system. We assume the information generated on the ground is correct (see paragraph 3f of the charter). We assume you probably will want to assemble a team to review that particularly thorny problem separately. We also assume that time exists to cope with that problem after the HEAO-B CDR.

I know you want to perpetuate a review team after the CDR. We recommend that you determine what items or subsystems you wish reviewed (such as ground attitude determination) and that task agreements be developed for the S&E laboratories to support such efforts.

Sherman M. Seltzer
Chairman, HEAO-B ACDS
Review Team

Enclosure
Charter

ORIGINAL PAGE IS
OF POOR QUALITY

August 12, 1976

HEAO-B ACDS REVIEW TEAM CHARTER

A team composed of members of the Data Systems Laboratory, the Electronics and Control Laboratory, the Systems Analysis and Integration Laboratory, the Systems Dynamics Laboratory, and the Structures and Propulsion Laboratory has been convened to review the HEAO-B Attitude Control and Determination System (ACDS). The team is entitled the "HEAO-B ACDS Review Team."

The mission of the team is to discharge S&E's ACDS Critical Design Review (CDR) responsibility to assess as a team the HEAO-B ACDS technical adequacy and identify any potential or existing inadequacies. This will be implemented by performing an in-depth review of the HEAO-B ACDS design. This mission may be defined as consisting of three steps:

1. Determine the ACDS performance.

2. Determine if that performance meets the ACDS subsystem specification (assumed to be a specification developed by TRW to meet the MSFC-developed CEI specification), and if not where it fails. It also is assumed that the ACDS subsystem specification is SS7-29, Rev. A, dated January 6, 1976; release dated March 17, 1976; configuration and data management dated March 22, 1976.

3. Determine if the TRW-developed ACDS subsystem specification meets the CEI specification (Hzt-72 M 10067, Rev. A, including Change 15 dated April 29, 1976). Where discrepancies exist, they will be listed and defined in the Review Team's Final Report.

The team will perform this mission in time to participate in the HEAO-B ACDS CDR (presently scheduled for September 21-22, 1976 at TRW). Appropriate "RID's" will be prepared before the CDR takes place. Immediately thereafter the team will prepare a report describing its findings, including a description of the team's interaction in the CDR; submit the report to Mr. Fred Wojtalik; and disband.

The flight software (i.e., the software included in the on-board computer) will be investigated only to the flow chart level. The flight hardware will be investigated at least to the block diagram level. Because block

diagrams can be to varying degrees of detail, the concerned team member will determine the level of detail on a case-by-case basis.

Definitions

1. Technical adequacy. The ACDS will meet the ACDS subsystem specifications during HEAO-B activation and during all operational modes defined in the CEI specification.

2. Technical inadequacy. Any ACDS item--software, hardware, or analytical--that causes the ACDS not to meet the ACDS subsystem specifications during activation or during any of the operational modes defined in the CEI specifications.

3. ACDS. For the review team's purposes, the ACDS shall be assumed to be only the spacecraft-borne system that includes the following:

a. The guidance and control laws and the software and hardware required to implement them.

b. The on-board implementation of the pointing, maneuvering, and momentum unloading schemes and the required associated on-board software and hardware.

c. The Star Trackers (ST), Reference Gyroscope Assemblies (RGA), Reaction Wheel Assemblies (RWA), Reaction Wheel Electronics Assemblies (RWEA) Sun Sensor Assemblies (SSA), the Transfer Assembly (TA), and the Digital Processor Assemblies (DPA).

d. Those portions of the Reaction Control System (RCS) and the Electrical System that interact with or otherwise affect the ACDS.

e. The ACDS shall not include the ground software.

f. The ground-generated information (e.g., two sets of quaternions, the RG τ-matrix, RW matrix, target and maneuver information) used by the ACDS is assumed to be properly and correctly determined and communicated to the ACDS.

ORIGINAL PAGE IS
OF POOR QUALITY

g. That telemetry associated with the ACDS shall be excluded from this review. It is assumed to meet the requirements set forth by those who need ACDS data.

Sherman H. Seltzer
Chairman, HEAO-B ACDS
Review Team

ORGANIZATION:	MARSHALL SPACE FLIGHT CENTER	NAME:
SYSTEMS DYNAMICS LABORATORY POINTING CONTROL SYSTEMS BRANCH	ACTION ITEM LOG	S. M. SELTZER DATE: AUGUST 26, 1976 (REVISED)

NO.	ITEM	ASSIGNED TO	DUE DATE	DISPOSITION
1.	PREPARE STRAW MAN SCHEDULE.	C. GREEN	27 JUL 76	DISTRIBUTE 27 JULY.
2.	COMMENTS ON ORGANIZATIONAL MATERIAL FROM JULY 23.	ALL MEMBERS	27 JUL 76	COMPLETED 27 JULY.
3.	CONTACT HEAO PROJECT OFFICE FOR PROPOSED 3 AUG PRESENTATION ON ACDS REQUIREMENTS AND SPECS.	C. GREEN	27 JUL 76	BOB WOLF WILL PRESENT ON 3 AUG 76.
4.	SET UP PROPOSED 10 AUG PRESENTATION OF EXPERIMENT REQUIREMENTS UPON ACDS (BY SAO?)	B. WOLF	27 JUL 76	BOB WOLF SETTING THIS UP.
5.	OBTAIN LATEST HEAO-B CEI SPEC.	C. GREEN	ASP	C. GREEN REQUESTED COPIES FOR TEAM.
6.	OBTAIN LATEST ACDS SUBSYSTEM SPEC.	B. WOLF	5 AUG 76	B. WOLF OBTAINED SPEC.
7.	CONTACT PROJECT OFFICE AND CHIEF ENGR's OFFICE FOR REPRESENTATIVE AT EACH MEETING.	C. GREEN	ASP	BOB WOLF, DOC CARLILE, INVITED.
8.	CONTACT WOJTALIK's OFFICE FOR APPOINTMENT TO DISCUSS MISSION, SCOPE OF TEAM ACTIVITIES.	C. GREEN	ASP	MEETING TOOK PLACE WEDNESDAY, JULY 28.
9.	LOCATE HEAO-B ACDS PERTINENT DOCUMENTATION, USING HOFFMAN's LIST.	C. GREEN	ASP	DOCUMENTATION LOCATED.
10.	SUGGEST THAT TOM GUFFIN PARTICIPATE IN REVIEW TEAM MEETINGS; DISCUSS W/LLOYD STONE.	M. SINGLEY	ASP	REP FROM CAUSEY's ORGANIZATION INVITED.

(ALL ACTION ITEMS COMPLETED ON THIS PAGE)

MSFC - Form 3369 (Rev October 1970)

FILE NO. 1

ORIGINAL PAGE IS OF POOR QUALITY

ORGANIZATION: SYSTEMS DYNAMICS LABORATORY POINTING CONTROL SYSTEMS BRANCH	MARSHALL SPACE FLIGHT CENTER ACTION ITEM LOG (CONTINUED)	NAME: S. M. SELTZER DATE: AUGUST 26, 1976 (REVISED)

NO.	ITEM	ASSIGNED TO	DUE DATE	DISPOSITION
XI.	RECOMMEND HOW BEST TO INCORPORATE ON-BOARD UPDATE (AND INTERFACE) OF ACDS BY STAR TRACKER.	CRAIGHEAD/ KENNEL	ASP	INTERFACE DEFINED AGREED UPON BY CRIAGHEAD/KENNEL: GROUND SENDS UP (TO ACDS) 2 SETS OF QUATERNIONS.
XII.	DETERMINE HOW BEST TO SCHEDULE HARDWARE (ST, RGA, RW's) REPORTS.	SIMS	ASP	PLAN TO REPORT ON ALL ACDS HARDWARE AT ONE TIME (19 AUG) UNLESS CLYDE JONES DEMURS.
XIII.	PREPARE PROPOSED TEAM CHARTER.	SELTZER	12 AUG 76	REVIEWED & DISTRIBUTED
XIV.	ATTEMPT TO OBTAIN CDA-RELATED CHANGES OF PRELIMINARY DESIGN AUDIT FOR DPA SOFTWARE AND ENSURE THAT TEAM HAS LATEST SOFTWARE REQUIREMENTS.	HIGHT	31 AUG 76	COMPLETED BY MEMO.
15.	REVIEW CEI SPEC AND PREPARE LISTS OF REQUIRED CHANGES.	TEAM	AT EACH PRESENTATION TO TEAM	
XVI.	DETERMINE REASON FOR x-y PLANE CONSTRAINT OF $\pm 1°$ OF THE SUN LINE.	B. WOLF	ASP	CLOSED. REASON--TO OBVIATE NEED FOR A NEW THERMAL ANALYSIS.

MSFC - Form 3384 (Rev October 1970)

FILE NO. 2

ORGANIZATION:	MARSHALL SPACE FLIGHT CENTER	NAME:
SYSTEMS DYNAMICS LABORATORY POINTING CONTROL SYSTEMS BRANCH	ACTION ITEM LOG (CONTINUED)	S. M. SELTZER DATE: AUGUST 26, 1976 (REVISED)

NO.	ITEM	ASSIGNED TO	DUE DATE	DISPOSITION
17.	DETERMINE MOMENTUM VS. TIME ANALYSIS/SIMULATION STATUS, PAYING PARTICULAR ATTENTION TO "LAZY SUSAN" AND ANY X-AXIS ATTITUDE POINTING REQUIREMENT.	H. KENNEL		AWAITING MOMENTS OF INERTIA.
18.	SET UP BRIEFING (NANCY MILLY) ON FMEA AND SINGLE POINT FAILURES FOR 26 AUG.	M. SINGLEY	12 AUG 76	TOOK PLACE 26 AUG.
19.	CONTACT F. WOJTALIK: WHY DOES RECIO STATE ACDS PERFORMANCE UNACCEPTABLE? ESTABLISH BRIEFING FOR TEAM.	SELTZER	12 AUG 76	BRIEFING SCHEDULED FOR 25 AUG 76.
20.	OBTAIN MASS DISTRIBUTION/MOMENTS OF INERTIA FOR "LAZY SUSAN" FOR HANS KENNEL.	B. WOLF	ASP	
21.	OBTAIN MOMENTS OF INERTIA OF MOTOR/GEAR TRAIN FOR HANS KENNEL.	SIMS	ASP	I_{MOTOR}=5 gm cm^2 (NEGLIGIBLE) $I_{GEAR\ TRAIN}$ (NEGLIGIBLE)
22.	SET UP PRE-CDR BRIEFING ONE WEEK PRIOR TO CDR.	B. WOLF	ASP	
23.	TAKE STEPS TO ENSURE TIMELY RECEIPT OF CDR DOCUMENTATION, i.e., TWO WEEKS PRIOR TO CDR. (6 SEP 76)	B. WOLF	ASP	
24.	SET UP TELECON TO VERIFY UNDERSTANDING OF TRW's RW MODEL (TRW MEMO HEAO 74-460-209).	SIM	ASP	SCHEDULED FOR 10:30 a.m. ON 31 AUG 76.

MSFC - Form 3304 (Rev October 1972)

PAGE NO. 3

ORIGINAL PAGE IS OF POOR QUALITY

ORGANIZATION: SYSTEMS DYNAMICS LABORATORY POINTING CONTROL SYSTEMS BRANCH	MARSHALL SPACE FLIGHT CENTER ACTION ITEM LOG (CONTINUED)	NAME: S. M. SELTZER DATE: AUGUST 26, 1976 (REVISED)

NO.	ITEM	ASSIGNED TO	DUE DATE	DISPOSITION
25.	DISCUSS JITTER DEFINITION AND REQUIREMENT WITH SAO AT MEETING TO BE SCHEDULED.	WOLF	ASP	
26.	DETERMINE NSA AND FSA DESIGN VERIFICATION RATE REQUIREMENTS.	SHELTON	ASP	
27.	RESOLVE QUESTIONS CONCERNING ACCURACY AND RELIABILITY NUMBERS PRESENTED AT HEAO-B PDR FOR z-SUN SENSOR.	SIMS	ASP	
28.	CHANGE TITLE OF 3d DAY OF CDR TO REFLECT IT IS SOFTWARE.	WOLF	AUG	
29.	ENSURE TRW ALLOTS SUFFICIENT TIME TO COVER SOFTWARE IN DEPTH.	WOLF	AUG	
30.	WHY MUST COMMENTS ON HEAO-A TEST RESULTS BE SUBMITTED BY 17 SEP? CHANGE DUE DATE TO AFTER HEAO-B CDR.	WOLF	AUG	
31.	SUBMIT REPORT ON REVIEW OF HEAO-A TEST RESULTS DOCUMENTATION.	SHELTON/COX	30 SEP 76	
32.	HOW MANY MANEUVERS PER TIME PERIOD IS POWER PROFILE BASED ON?	MILNER		
33.	WAS HEAO-A REVIEW TEAM's RECOMMENDATION ON "UNDERVOLTAGE SWITCHOVER CRITERION ACCEPTED?	WOLF		

FILE NO. 4

MSFC - Form 3281 (Rev October 1972)

ORGANIZATION: SYSTEMS DYNAMICS LABORATORY POINTING CONTROL SYSTEMS BRANCH	MARSHALL SPACE FLIGHT CENTER ACTION ITEM LOG (CONTINUED)	NAME: S. M. SELTZER DATE: AUGUST 26, 1976 (REVISED)

NO.	ITEM	ASSIGNED TO	DUE DATE	DISPOSITION
34.	SET UP PRESENTATION BY WOJTALIK ON DISPOSITION OF HEAO-A REPORT.	SELTZER		
35.	DETERMINE PREVIOUS ELECTRICAL CONNECTOR EXPERIENCE w.r.t. FAILURES.	WOLF		
36.	DETERMINE IF HEAO TRANSPORTED HORIZONTALLY TO CAPE AND DETRIMENTAL EFFECTS ON RCS.	JONES		

FILE NO. 5

ORIGINAL PAGE IS OF POOR QUALITY

APPENDIX L

MEMO ED12-76-87, SELTZER TO WOJTALIK, DATED OCTOBER 13, 1976, SUBJECT: "REVIEW OF HEAO-B CEI AND ACDS SPECIFICATIONS"

PRECEDING PAGE BLANK NOT FILMED

National Aeronautics and
Space Administration

George C. Marshall Space Flight Center
Marshall Space Flight Center, Alabama
35812

NASA

Reply to Attn of: ED12-76-87

October 13, 1976

TO: EE71/F. Wojtalik

FROM: ED12/S. M. Seltzer, Systems Dynamics Laboratory

SUBJECT: Review of HEAO-B CEI and ACDS Specifications

The HEAO-B ACDS Review Team has completed their review of the HEAO-B CEI Specification and the HEAO-B ACDS Subsystem Specification. Our comments and recommended corrections are documented as Enclosures 1 and 2, respectively. A major portion of the review effort has been to make the two specifications compatible. Hence, the two enclosures are closely correlated and should be handled as a package rather than separately. It is imperative that action be taken to incorporate the recommended changes into the existing specifications immediately, for many of our comments for the HEAO-B ACDS CDR assume corrected specifications.

Sherman M. Seltzer
Chairman, HEAO-B ACDS
Review Team

2 Enclosures

cc:
EC01/Mr. Moore
ED01/Dr. Lovingood
ED01/Mr. Sisson
ED01/Dr. Worley
ED11/Dr. Blair
EL01/Dr. Thomason
EP01/Mr. McCool
ACDS Team Members
    EC21/Dr. Doane
    ED22/Mr. Green
    EL04/Messrs. Hight/Cox
    EF15/Messrs. Rowe/Collins
    EP24/Mr. Lee Jones
    ED12/Mr. Kennel
    EC13/Mr. Milner
    ED12/Mr. Shelton
    EL54/Messrs. Singley/Craighead
    EC22/Mr. Sims

RECORD OF COMMENTS ON PUBLICATIONS

DATE: September 15, 1976

SUBJECT: 72M10067 HEAO-B Observatory System Specification

REVISION NOTES FROM: HEAO-B ACDS Review Team (S. M. Seltzer, Chairman)

ITEM NO.	PAGE	PARAGRAPH	LINE *	COMMENT (Exact wording of recommended change must be given)
1	2-1	2.1	3	HDM 4222.1 (Applicable Documents Index) an MSFC document, should list the specific issue of any applicable document in effect for Contract NAS8-28300. The ACDS related documents are out-of-date as listed in HDM 4222.1.
2	2-5	2.3.2		Add document discussed in item 8 to list of documents.
3	2-11	2.3.6.6	8	Replace TBD with "D01137." Add "D01140 Preflight Interface Software."
4	3-2	3.1.1.1.2	fol'g 9	Add Normal Sun Acquisition and appropriate description.
	3-1 & 3-2	3.1.1.1.2		In general the mode definitions are incompatible with those contained in the ACDS subsystem spec. The CEI spec should be made compatible with the ACDS subsystem spec definitions.
5	3-1	3.1.1.1.2	13	Change sentence to read: The principal operations are:
6	3-2	3.1.1.1.2	1	Change Point Mode to read Pointing.
7	3-2	3.1.1.1.2	7	Change Failure Mode to read Failure Accommodation.
8	3-2	3.1.1.1.3	2	Replace 72M100XX with correct number, i.e., HEAO Operations Control Center Document. Add this document to paragraph 2.3.2, page 2-5.
9	3-2	3.1.1.1.3	10-11	Delete last sentence of para. ("A high rate...is provided.")
10	3-3	3.1.1.1.4.2		The inertia data is different from both that which TRW is using and that on p. 15, ACDS subsystem spec. Different numerically, different with report to times inertias are measured, and different in that CEI spec does not include cross product moments of inertia. Recommend numerical values be omitted from CEI spec (too much detail).
11	3-3	3.1.1.1.4.4		The beginning of this paragraph ("Communications") is missing, apparently a typing omission.
12	3-5	3.1.1.1.7		Replace TBD.
13	3-17, 3-18			These pages (and their contents! e.g. subsystem grounding) have been omitted.
14	3-21	3.1.1.2.3		Replace six TBD's.
15	3-31	3.1.1.2.5.1 & 3.1.1.2.5.2		These two sections are incorrect. Replace with section(s) compatible with ACDS subsystem spec (e.g. para. 3.3.2 Operational Modes and Conditions) as modified by HEAO-B ACDS Review Team recommendations.

* Reference to line number within the paragraph or subparagraph.

MSFC - Form 1068 (August 1963)

Encl 1

ORIGINAL PAGE IS OF POOR QUALITY

RECORD OF COMMENTS ON PUBLICATIONS

DATE: September 15, 1976

SUBJECT: 72M10067 HEAO-B Observatory System Specification

REVISION NOTES FROM: HEAO-B ACDS Review Team (S. M. Seltzer, Chairman)

ITEM NO.	PAGE	PARAGRAPH	LINE *	COMMENT (Exact wording of recommended change must be given)
16	3-33		9	Insert the following sentences before the last sentence. Rotation about the x axis shall be less than 1°.
17	3-33	3.1.2.5.2.3		It is not apparent how the verbage in the CEI spec sectior led to the requirement stated in the last sentence of para. 3.3.2.3 of the ACDS subsystem spec.
18	3-22	3.1.1.2.5.2.4	6	Define TBD. (Error allocation to experiment sensor systen for attitude determination purposes).
19	3-34	3.1.1.2.5.3.2.4.2		Correct the value shown (150,000 gauss-cm^3).
20	3-34	3.1.1.2.5.3.2.5		Add a new paragraph entitled Moving Masses. Describe disturbances and perturbations caused by moving masses (FPTA, etc). Specify limit of these disturbances.
21	3-34	3.1.1.2.5.4.2	1	Delete words of two years. That shelf life may not be sufficient for HEAO-B (Example: DPA may be 2 years old when launched).
22	3-35	3.1.1.2.5.6	5	Spell accomplished correctly.
23	3-35	3.1.1.2.5.8.1		Replace TBD with "D01140."
24	3-35	3.1.1.2.5.8.2	5-6	Change last sentence to: "Specific requirements of the flight program are contained in D01137 and of the emergency mode are contained in SS7-29." (Reason: Replaces TBD.)
25	3-37	3.1.1.2.6.1		Ensure that modes named are consistent with those discussed in Item 15 (above).
26	3-37	3.1.1.2.6.2	5	(Subpara c). Change 60 lbs to 40 lbs.
27	3-37	3.1.1.2.6.2	7	(Subpara d). Change 50 milisecond to 40 milisecond.
28	3-39	3.1.1.2.6.7		-----except that proof pressure test values for lines and fittings shall be 1.5x maximum operating pressure, to be consistent with the value for pneumatic pressure vessels.
29	3-49	3.1.1.2.12.1	3	Replace TBD with "D01276." Add to paragraph 2.3.6.10 (p. 2-12).
30	3-53	3.1.2.8		On-orbit induced environment is not covered, i.e., venting, experiment motion, etc. (See para. 3.1.1.2.5.3.2, page 3-33).

* Reference to line number within the paragraph or subparagraph.

MSFC - Form 1968 (August 1968)

ORIGINAL PAGE IS
OF POOR QUALITY

RECORD OF COMMENTS ON PUBLICATIONS

DATE: September 15, 1976

SUBJECT: 72M10067 HEAO-B Observatory System Specification

REVISION NOTES FROM: HEAO-B ACDS Review Team (S. M. Seltzer, Chairman)

ITEM NO.	PAGE	PARAGRAPH	LINE *	COMMENT (Exact wording of recommended change must be given)
31	3-54	3.2.1.2	3	Is NASCOM going to support the mission instead of STON (as indicated in the text)? If so, need to reference explanatory document.
32	3-54	3.2.1.3	7	Define TBD (72M100XX) for HEAO OCC specification. Add to para. 2.3.6.6.
33	3-54	3.2.1.4	4	Define TBD.
34	3-56	3.2.2.1	6	Define TBD.
35	3-58	3.2.2.2.4		Add software documents - D01137, Flight Program and D01140, Preflight Interface Program.
36	3-59	3.2.4		Add new paragraph: 3.2.4 Other D00906 ICS/EXSE Telemetry and Command D01276 ICS Software
37	4-2	Table 4.1		Relocate the title so it can be seen (it is in margin and cannot be read without removing staples from CSI spec).
38	4-5	Table 4.1		Add note: "R - See Remarks column."
39	4-19	Table 4.1		Correct mode names to be compatible with ACDS subsystem spec as modified by HEAO-B ACDS Review Team recommendation.
40	4-19	Table 4.1	Last	Change 0.1 deg/sec to be compatible with ACDS subsystem spec as modified by HEAO-B ACDS Review Team recommendations.
41	4-20	Table 4.1		Add "jitter" requirement to be compatible with ACDS subsystem spec as modified by HEAO-B ACDS Review Team recommendations.
42	4-20	Table 4.1	11	Same remark as Item 39 (above).
43	4-35	Table 4.1		Add items h) and i) to include comments of Items 35, 36 (above).
44	4-37			Add new para. 3.2.4 entitled Other exactly like comment of Item 36 (above).

* Reference to line number within the paragraph or subparagraph.

MSFC - Form 1068 (August 1968)

RECORD OF COMMENTS ON PUBLICATIONS

DATE: September 15, 1976

SUBJECT: Subsystem Specification - ACDS HEAO-B (SS7-29A)

REVISION NOTES FROM: S. M. Seltzer, HEAO-B ACDS Review Team

ITEM NO.	PAGE	PARAGRAPH	LINE *	COMMENT (Exact wording of recommended change must be given)
1				Need to add a preface (in some form). In it there is a need to clearly define the probabilities used in the spec, including over what time duration the probabilities stated are applicable. These definitions must be used uniformly throughout the specifications. The manner in which TRW will verify these probabilities must be defined. These probability definitions must be used uniformly throughout the other applicable HEAO specs.
2	3	2		Change last item from TBS to D01137.
3	3	2		Add new item: D01138 - ACDS HEAO-B Preflight Interface Program Requirements Document. Also add documents referenced in Item 22 (below).
4	4	3.1		Change quantities of DPA's from one to two.
5	4	3.1		Change last item from TBS to D01137.
6	4	3.1		Add new item: same as Item 3 above.
7	5	Fig. 3.1		Add (2) under block title: Transfer Assembly.
8	5	Fig. 3.1		Add (2) under block title: Digital Processor Assembly.
9	7	3.1.9	2	Change to "....data processing, mode control, ..."
10	8	3.1.10	1-2	Change "refer to" to "<u>referred to as</u>"
11	10	3.2.2	4	Change sentence to read "condition by ground command <u>either from the OCC in real time or from the SCP</u>."
12	10	3.2.2	4	Follow above sentence (Item 11) with "The term ground command implies either immediate response or command that was stored and used later.
13	11	3.2.2.1	1	Change first sentence to read: "....enter the <u>Normal Sun Acquisition</u> mode only upon command, <u>with initial entry based upon launch vehicle separation</u>."
14	11	3.2.2.1	4-5	Change "sun point mode" to "<u>Normal Sun Acquisition</u> mode."
15	11	3.2.2.1	7	Add: "When sunlight is not present, the ACDS shall cause the spacecraft to hold the attitude existing upon entry into the eclipse condition."
16	12	3.3.1.1	4	Check correctness of "probability .99"; shouldn't it read "probability <u>.997</u>"?

* Reference to line number within the paragraph or subparagraph.

MSFC - Form 1968 (August 1962)

Encl 2

RECORD OF COMMENTS ON PUBLICATIONS

DATE: September 15, 1976

SUBJECT: Subsystem Specification - ACDS HEAO-B (SS7-29A)

REVISION NOTES FROM: S. M. Seltzer, HEAO-B ACDS Review Team

ITEM NO.	PAGE	PARAGRAPH	LINE *	COMMENT (Exact wording of recommended change must be given)
17	12	3.3.1.1	7	"(3σ)" is incompatible with stated probabilities.
18	12	3.3.2.1	4	TBD needs to be defined for the minimum time in minutes that sunlight must be present for observatory to sun point successfully in Normal Sun Acquisition Mode.
19	12	3.3.2.1	7	Change last line to read: "be maintained compatible with the star tracker spec."
20	13	3.3.2.2	22	Insert sentence before last sentence. The attitude about the x-axis shall be maintained within 1° (0.68 probability).
21	13	3.3.2.2	2	Add: "...from any initial attitude and body rate compatible with those specified in the CEI spec so long as..."
22	13	3.3.2.2	3	Add to end of para: "This time accounts for worst case body rates as set forth in TRW Memoranda HEAO-75-460-217 and HEAO-75-460-531."
23	13	3.3.2.2	6	Add to end of para: "When sunlight is not present, attitude control is inactive in the First Sun Acquisition Mode."
24	15	3.5.1.2	4-6	Delete last sentence of para.
25	15	3.5.1.2	8	Change verbage to read: "...consist of an adequate number of modes..."
26	15a	Table 3.1		Where is referenced Fig. 1-3? If it exists, where then are Fig. 1-1 and 1-2?
27	15a	Table 3.1		What is the usefulness of last three columns (apparently concerned with complimentary strips).
28	17	3.5.1.6.5	4	Change "thrust vector" to "spin axis."
29	17	3.5.2.2		Three TBD's need to be defined for number of telemetry words: analog, discrete bilevel, and digital.
30	18	3.5.3.1	3	Change to: "...pulse commands of no less than 0.040 second...."
31	18	3.5.4.1		If no experiments contain fluid, delete section 3.5.4.1; if any experiment contains fluid, change "None" to "No significant dynamic effect."
32	18	3.5.4.2		Change title to "Disturbance Torques"

* Reference to line number within the paragraph or subparagraph.

MSFC - Form 1908 (August 1968)

RECORD OF COMMENTS ON PUBLICATIONS

DATE: September 15, 1976

SUBJECT: Subsystem Specification - ACDS HEAO-B (SS7-29A)

REVISION NOTES FROM: S. M. Seltzer, HEAO-B ACDS Review Team

ITEM NO.	PAGE	PARAGRAPH	LINE *	COMMENT (Exact wording of recommended change must be given)
33	18	3.5.4.2.1		Add section 3.5.4.2.1 entitled "Venting Disturbance Torques." Use verbage of former 3.5.4.2.
34	18	3.5.4.2.2		Add section 3.5.4.2.2 entitled "Experiment-Induced Disturbance Torques" and add verbage to cover disturbance torques due to FPTA and other experiment equipment motions during orbital operations.
35		3.5.4.4	1	Change "store" to "stored."
36		3.5.4.4	2-3	Change to "...capability to store and maneuver to 14 pre-selected targets."
37		3.5.4.4	4	Change to "...orbit, with storage of at least 7 orbits in advance..."
38	22	Table 4.1	22-27	Put table number on each page of the table.
39	24	Table 4.1: 3.3.2.2	6	Change "jitter 1 sec in 1 sec" to: "Jitter about y, z-axis: 1 sec in 1 sec about x-axis: 20 sec in 1 sec
40	28	6.1.1	4	Change "Coarse sun sensing" to "± y-sun sensor assembly."
41	28	6.1.1.1	1	Change "fine sensing portion" to "narrow angle portion."
42	28	6.1.1.1	3	Change ± 3° to ± 30°.
43	28	6.1.1.1	4	Change "Coarse sensing portion" to "± y-sun sensor assembly."
44	28	6.1.1.2	1	Change entire line to read: "The output of the narrow angle sensing elements and the wide angle sensing elements,..."
45	28	6.1.1.3	1-2	Same as Item 41.
46	28	6.1.1.3	3	Same as Item 43.
47	28	6.1.1.3	5	Change "Coarse sensing function" to "± y-sun sensor assembly function."
48	28	6.1.1.3	7	Change "ten degrees" to "3.2°."
49	29	6.1.1.4		6.1.1.4 Paragraph does not state which sensor, wide angle or narrow is being addressed. Values do not agree with equipment spec, suggest rewrite as follows: *

* Reference to line number within the paragraph or subparagraph.

MSFC - Form 1908 (August 1965)

ORIGINAL PAGE IS OF POOR QUALITY

RECORD OF COMMENTS ON PUBLICATIONS

DATE: September 15, 1976

SUBJECT: Subsystem Specification - ACDS HEAO-B (SS7-29A)

REVISION NOTES FROM: S. M. Seltzer, HEAO-B ACDS Review Team

ITEM NO.	PAGE	PARAGRAPH	LINE *	COMMENT (Exact wording of recommended change must be given)
				*6.1.1.4 Accuracy The detector functions shall exhibit the accuracies specified over the fields of view specified. *6.1.1.4.1 Wide Angle Detector The null accuracy of the wide angle pitch detector and wide angle roll detector shall be within ± 3.2° with respect to the subassembly optical axis. *6.1.1.4.2 Narrow Angle Detector Given the cross angle β (or .α), the angle α (or β) shall be determinable from the calibrated output characteristic within the following accuracy: the 3σ error in the indicated output shall be ± 0.6° ± 10% of the true input angle within ± 20° of null and shall be less than ± 13% of the true input angle over the remaining field of ± 30° each axis. The true input angle is defined with respect to the subassembly axes in the ZSSA equipment specification.
50	33	6.1.6	5	Make 20 in-oz of this spec and 17 in-oz of the hardware spec consistent.
51	34-40	6.2		Boil this entire academically fascinating tutorial treatment down to just the requirements.
52	41-47	6.3		Same as Item 51 above.
53	49	6.4.1		Why separate columns for x, y and z? They appear identical (except for one omission).
54	49	6.4.1		Take another look at the entire table. Fill in the blanks or tell why they are left blank. Update it.
48-50		6.4		Prepare a similar error budget for each of the modes as defined in para. 3.3 (as modified by this document), not just the attitude determination mode. The error budget should be separated into two classes: (1) subsystem performance specs, and (2) equipment ("block box") equipment specs. This section should constitute a summary that consists of a single place to look for any error source within the ACDS.

* Reference to line number within the paragraph or subparagraph.

MSFC - Form 1908 (August 1962)

APPENDIX M

MEMO ED12-76-83, SELTZER TO WOJTALIK, DATED OCTOBER 5, 1976, SUBJECT: "REVIEW OF HEAO-B ACDS CDR DOCUMENTATION"

National Aeronautics and
Space Administration

George C. Marshall Space Flight Center
Marshall Space Flight Center, Alabama
35812

NASA

Reply to Attn of: ED12-76-83

October 5, 1976

TO: EE71/F. Wojtalik

FROM: ED12/S. M. Seltzer, Systems Dynamics Laboratory

SUBJECT: Review of HEAO-B ACDS CDR Documentation

The HEAO-B ACDS Review Team has completed its review of the CDR documentation. We have documented our comments and questions on the two sets of enclosures (Encl 1: ACDS CDR; Encl 2: Flight Program Requirements Document). I "Datafax-ed" Enclosure 1 to Dale Hoffman (TRW) last night. He telephoned me at home (per my request) to confirm that he received it. This will enable him to prepare for our discussion at the pre-CDR at MSFC (MIC Room, Building 4487) on October 6-7.

In approximately a week, you will receive our documented comments and corrections concerning the HEAO-B CEI specification and the HEAO-B ACDS specification. We are proof-reading them now.

Sherm

Sherman M. Seltzer
Chairman, HEAO-B ACDS
Review Team

2 Enclosures

cc:
EC01/Mr. Moore
ED01/Dr. Lovingood
ED01/Mr. Sisson
ED01/Dr. Worley
ED11/Dr. Blair
EL01/Dr. Thomason
EP01/Mr. McCool
ACDS Team Members
EC21/Dr. Doane
ED22/Mr. Green
EL04/Messrs. Hight/Cox
EF15/Messrs. Rowe/Collins
EP24/Mr. Lee Jones
ED12/Mr. Kennel
EC13/Mr. Milner
ED12/Mr. Shelton
EL54/Messrs. Singley/Craighead
EC22/Mr. Sims

RECORD OF COMMENTS ON PUBLICATIONS

DATE: October 4, 1976

SUBJECT: HEAO-B ACDS CDR (26000-460-042, 19 October 1976)

REVISION NOTES FROM: S. M. Seltzer, HEAO-B ACDS Review Team, MSFC

ITEM NO.	PAGE	PARAGRAPH	LINE *	COMMENT (Exact wording of recommended change must be given)
1	1-3	--	--	Glossary is incomplete (e.g., DHA, PSU, TRIU, NVE, etc).
2	2-1	2.1	14	Add: "...on-board logic upon <u>either</u> separation from..."
3	2-1	2.1	15	Do you want to use the work "INSIPIENT" (as shown) or the word INCIPIENT (different spelling, different meaning)? Is its use as an adverb modifying "catastrophic" the use you really intend?
4	2-2	--	--	Figure 2-1 does not indicate inputs to RGA 5 and 6 from non-essential bus power and switching commands. No inputs to RGAs from Transfer Assembly are indicated. What is the significance of dashed and solid arrows from Transfer Assemblies for Star Tracker control?
5	2-3	--	--	Figure 2-2 is not labeled properly for RGA orientations. Also, it does not show the angle between RW's and major axes of spacecraft.
6	2-5	1	last	Question. Are narrow angle ZSSA sun aspect signals used actively in the on-board control, or only to augment ground attitude determination?
7	2-5	2	6	Replace "<u>sun point failure mode</u>" with "first sun acquisition mode." This should be done throughout the documentation.
8	2-5	2	8	Question. What actions have been taken to assure correct telemetry signals, i.e., no inversions as received on ground?
9	2-7	2.2	last sent.	Add: The present planned operation is to enter NSA via command from the SCP before loss of tracking at Ascension.
10	2-7	--	--	CEI and ACDS subsystem specification nomenclature mode should be made compatible.
11	2-7	2.2	11	Comment: FSA is also initiated by LV separation signal.
12	2-8	2	4	During pointing, the x-z plane is constrained to $\pm$ 1° of the sun line. This should be stated.
13	2-8	3	5	Star tracker data correction is done on the ground.
14	2-6	--	--	When is the last possible date for defining operating characteristics and calibration data for the ST without impacting either the flight ACDS or the ground software?

* Reference to line number within the paragraph or subparagraph.

MSFC - Form 1998 (August 1968)

Encl. 1

RECORD OF COMMENTS ON PUBLICATIONS

DATE: October 4, 1976

SUBJECT: HEAO-B ACDS CDR (26000-460-042, 19 October 1976)

REVISION NOTES FROM: S. M. Seltzer, HEAO-B ACDS Review Team, MSFC

ITEM NO.	PAGE	PARAGRAPH	LINE *	COMMENT (Exact wording of recommended change must be given)
15	2-9	1	2	Question. What is the TRW rationale for not switching immediately to FSA instead of waiting for under voltage?
16	2-9	2.2	add	Summarize LPL and when enabled so it all can be found at one location in documents.
17	2-10	--	--	On this and all other such blank pages, the comment "INTENTIONALLY LEFT BLANK" should be placed. Otherwise the recipient might suspect a printing error.
18	2-11	2.3		When do we find out if the component specs are met? In several places TRW suggests need for more tests, (Example: App. E, memo HEAO-76-460-178, page 31).
19	2-12			To what do the four asterisks refer?
20	2-12			RW weight is 30.5 pounds instead of 29.5.
21	2-15	5.3.4.2	7	RGA assembly arrangement picture is incorrect. This item was wrong in the PDR; we recommended at that time that it be corrected; this has not been accomplished and is still incorrect!
22	2-15			Spec is stated incorrectly.
22a				Drift Characteristics: g-insensitive value should be 5.0°/HR instead of 3.0°/HR.
22b				Voltage Sensitivity: g-insensitive value should be 0.01°/HR/VOLT.
22c				Magnetic Field Sensitivity: g-insensitive value should be 0.2°/HR MAX.
23	2-21	--	--	RW weight is 30.5 pounds instead of 29.5.
24	2-21			o Motor Torque: 17.0 in-oz. This is the number we have recommended be standardized in the CEI and ACDS specs. However, it is not the value used in a number of recent TRW memos.
25	2-21			o Tachmeter Output: This value is misleading and might lead the reader to assume a D.C. value, rather than pulses, as the output.
26	2-22	--	--	Direction of arrow between Switching Regulator and Pulse Width Modulator should be reversed.

* Reference to line number within the paragraph or subparagraph.

MSFC - Form 1995 (August 1963)

RECORD OF COMMENTS ON PUBLICATIONS

DATE: October 4, 1976

SUBJECT: HEAO-B ACDS CDR (26000-460-042, 19 October 1976)

REVISION NOTES FROM: S. M. Seltzer, HEAO-B ACDS Review Team, MSFC

ITEM NO.	PAGE	PARAGRAPH	LINE *	COMMENT (Exact wording of recommended change must be given)
27	3-1	3	3	Should include all current SCN's (SCN 15?) instead of stopping at SCN 7.
28	3-2.3			Define probability as it applies in each requirement. Make it a useful quantity. Insert an example.
29	3-3			Define jitter per ECR submitted by the Pointing Control Systems Branch (ED12), MSFC.
30	3-3	3.1.1.2.5	2.4	What is significance of two probability values and how is each verified?
31	3-3			Add a subparagraph 3.1.1.1.2 - Performance Point Mode: Sun line within 15° of S/C z-axis. The zx plane shall be within ± 1° of the sun line.
32	3-4	...3.2.2		Update Venting per SCN 9, the experiment venting gases total angular momentum < 500 ft-lb-sec, instead of TBD.
33	3-4	...3.2.3		Update per SCN 14, separation rates, x- 1.1°/sec,axes perpendicular to x- 1.5°/sec.
34	3-4	...3.2.4		Change the value 150,000 gauss cm^3 to correct one (see recommended spec changes from Review Team).
35	3-4	...3.2.6		Does "Provided;" refer to "no single point failures?"
36.	3-5	...5.8.2		Flight Program: Insert comma: "...mode control, not used..."
37	3-5	...5.8.2		Flight Program: Define "emergency" mode.
38	3-5	--	--	Power: Put a numerical value in rather than "TBD."
39	3-6	--	--	SCN summary should include at least SCNs 1-15 or later as appropriate.
40	4-1	4.2	last	Question: Was ACDS changed to incorporate automatic initiation of NSA at separation?
41	4-2,-3			Where omitted (such as in Action Items 6 and 7), summarize the responses to each Action Item.
42	5-3	Fig. 5-1	--	How does one get from Mode F-1 to Mode 0 (off)? Which modes are impossible to get to from which other modes? Identify what dashed lines signify.

* Reference to line number within the paragraph or subparagraph.

MSFC - Form 1868 (August 1968)

RECORD OF COMMENTS ON PUBLICATIONS

DATE: October 4, 1976

SUBJECT: HEAO-B ACDS CDR (26000-460-042, 19 October 1976)

REVISION NOTES FROM: S. M. Seltzer, HEAO-B ACDS Review Team, MSFC

ITEM NO.	PAGE	PARAGRAPH	LINE *	COMMENT (Exact wording of recommended change must be given)
43	5-4	Mode 0	2	Question: What telemetry is received in Mode 0? Is FSA on or off in Mode 0 (off)? Are there substates of Mode 0?
44	5-5	Mode 4	6	Question: What determines the 64 second implementation? Will this update have to be more often if rate gyros drift more than allowed by spec?
45	5-9	5.3.1.1		Some items are not compatible with similar items in the Mission Control Procedures (correct title?) TRW MP-04S.
46	5-8	Table 5-2		In the last para. of p. 5-7, three commands are identified as critical. They should be so identified on Table 5-2.
47	5-10	5.3.2		Same comment as Item 45 above (Example: "TA-A First Mode Leave "in this document is identified as "TA-B..." in MP-04S; the latter probably is correct).
48	5-13			The sentence "The wheels are then run to 2000 RPM and the maneuver begins" should read "The wheels are accelerated and the maneuver begins."
49	5-24	--	--	Figure 5-9 should indicate interface between OPE and RGA's.
50	6-[illegible]	6.2.1		Recommend change in procedure to allow for RG calibration before beginning the scan for ground attitude determination and setting the NSA scan rate as high as possible (in real time).
51	6-8		Add	Discussion on NSA capability vs requirements. Include both rate and attitude initial conditions.
52	6-20	Table 6-4		Reconcile gains in table 6-4 with those in App. E, memo HEAO-76-460-175, p.2. Reconcile difference of maximum rate gain (15) of same memo and Flight Program Requirements Document D01137 (500).
53	6-21	6.3.2.1		Discuss resolution of problem of not meeting "Absolute pointing accuracy" when guide stars are separated by less than 1.8 degrees.

* Reference to line number within the paragraph or subparagraph.

MSFC - Form 1 [illegible] (August 1968)

RECORD OF COMMENTS ON PUBLICATIONS

DATE: October 4, 1976

SUBJECT: HEAO-B ACDS CDR (26000-460-042, 19 October 1976)

REVISION NOTES FROM: S. M. Seltzer, HEAO-B ACDS Review Team, MSFC

ITEM NO.	PAGE	PARAGRAPH	LINE *	COMMENT (Exact wording of recommended change must be given)
54	6-28	6.3.2.1		Describe the sloshing and structural interaction simulations that have not been released. (See App. E, memo -178, p. 31, which says additional modelling of slosh is recommended. Memo also shows marginal stability for variations considered and says additional testing of RWEA is required, p.20).
55	6-42	6.4.2.1		Summarize numerically the requirements for separation rates and attitude initial conditions along with the capabilities.
56	13-7			Provide detailed HEAO-B ACDS subsystem test plans (describe all test cases planned).
57	14-1	14.2	10-16	There is no problem with the system momentum test no matter what initial momentum the maneuver was started from.
58	14.2	14.4		Since the momentum at maximum FPTA speed is only slightly more than 1 ft-lb-sec there is no problem.
59	App. B	Software Documentation		D-1137 of 21 June 1976 should be referenced, rather than 12 January 1976.
60				General Comments 1. The earth magnetic field is modeled as a tilted dipole (HEAO-74-460-084) with the justification that magnetic torques are small with respect to the gravity gradient torques. Since the recognition of a 4π error in the magnetic torque model this assessment may not be true any more and a more accurate model of the earth magnetic field may be necessary.
61				2. Describe planned activity and schedule for resolving effect on ACDS of telescope to spacecraft isolators.
62				3. In the Appendices: Portions of the TRW memos are obsolete and hence incorrect. These obsolete passages should be identified.
63				4. The first time the period for one revolution of the RW is mentioned, the magnitude should be described as well as the fact that the direction of revolution is identified.

* Reference to line number within the paragraph or subparagraph.

MSFC - Form 1988 (August 1983)

RECORD OF COMMENTS ON PUBLICATIONS	DATE: October 4, 1976

SUBJECT: HEAO-B Flight Program Requirements Document, D01137, 21 June 1976

REVISION NOTES FROM: S. M. Seltzer, HEAO-B ACDS Review Team, MSFC

ITEM NO.	PAGE	PARAGRAPH	LINE *	COMMENT (Exact wording of recommended change must be given)
1	10-25	1	3	Add following sentence after end of paragraph: "Note that the first column of the body to wheel transforms are scaled by the x to y, z position gain ratio of 270/1700 (Kg in Figure 10.4-2, p. 10-14)."
2	10-26		last	There is a minus sign missing in the wheel to body transform, last line, last entry (TWB12) should be -.664463.

* Reference to line number within the paragraph or subparagraph.

MSFC - Form 1900 (August 1968)

Encl 2

APPENDIX N

REVIEW TEAM (MILNER) QUESTIONS CONCERNING RID NO. 5

PRECEDING PAGE BLANK NOT FILMED

10/29/76

ADDITIONAL INFORMATION REQUESTED

1. • State TRW's main objection to immediately placing the HEAO-B Observatory in a controlled mode (FSA) when an LPL "trigger" is given.

2. • How much capacity (worst case) remains in the batteries when the bus voltage drops to 26.5 volts? Assume this happens on the first day of launch.

3. • What action is TRW taking to preclude inadvertent "trigger" of the UV sensor when the reaction Wheels are managing momentum?

4. • Identify the HEAO-B Mission Control Procedures associated with UV and LPL? When will they be available for MSFC review?

5. • What is the probability (number) that an LPL "trigger" will occur on HEAO-B during orbital operations?

6. • What is the probability (number) that the UV sensor shall be "disabled" onboard the HEAO-B Observatory when an LPL "trigger" might occur?

TRW Response

1. See [illegible] -

2. 7 AH

3. Use SCP to [illegible] UV [illegible] when on [illegible] portion of battery discharge curve.

4. [illegible] Jan. 1977

5. 0.750 (ONE FAILURE PER YR) 1 - 0.750 = 0.250

6.

ORIGINAL PAGE IS
OF POOR QUALITY

APPENDIX O

NOTE TO SELTZER FROM HIGHT, DATED AUGUST 20, 1976, SUBJECT: "ACTION ITEM NO. 14 RESPONSE"

NOTE

August 20, 1976

TO S. Seltzer

FROM H. Hight

SUBJECT Action Item No. 14 - Response

Action Item No. 14 is as follows:

> Attempt to obtain CDA related changes of Preliminary Design Audit for DPA software and ensure that team has the latest software requirements.

The following information obtained from TRW during the week of August 16 is the latest available information on HEAO-B flight software which TRW had available for release:

1. D01137, Dated June 21, 1976. CADM date August 5, 1976.

   This is the initial baseline release--the first official release, and should have all of the HEAO-B DPA flight software requirements specified. Nominal values of parameters have not yet been specified and were not available. They will be specified by D. Hoffman later. (In repository)

2. A list of HEAO changes since the A CDR and B PDR was provided.

   The last item on the list was added by me, so there may be other changes not listed by TRW. Flow charts and design document changes were not available. In fact the Flight Program Design Document has not yet been officially released on B. The particular value MT was specified to be about equal to 0.999XXXXX, where X = TBD. The use of the parameters MODE and MD was basically an evolution and programmers choice, and will not be changed since it works and is common with A. (Attached)

3. For areas common to A and B, the A Flight Program Design Document is a source of information, but must be used cautiously. This document is in the Repository (D00968).

A list of HEAO-B flight software concerns is attached. As you can see, most have been or are being resolved. Hopefully all will be resolved at or by the ACDS CDR time.

Hermon H. Hight

Hermon H. Hight, EL04

2 Encl

4. CHANGES TO DESIGN BASELINE ~~SINCE HEAO-A CDR~~

4.1 Changes Since HEAO-A PDR

The ACDS design is based on maximum commonality of all HEAO spacecraft. The design changes from the HEAO-A baseline are generally related to the following items:

Hardware Changes

- Add two gyro channels
- Addition of 4 skewed reaction wheel assemblies
- Addition of 4 reaction wheel electronics assemblies
- Connection of HRT command and data interfaces

Software Changes

- Delete Celestial Scan mode
- Add HRT star tracker and reaction wheel input
- Add RWEA command computations
- Add HRT star tracker processing
- Add on-board attitude reference update
- Modify command and telemetry interfaces.

4.2 Changes Since HEAO-B PDR

Changes to the [illegible] design since the HEAO-B PDR [illegible] related to the following items:

Hardware changes

- RWEA commanding changed from voltage in to current cmds
- RWA [illegible] protection added
- RWA overtemperature " "
- RWEA " " "

Software changes

- Increased targets to 14
- Modified LPL trips based on total momentum
- Deleted HRT STA ~~[illegible]~~ corrections on Board
- Auto initiation of NSA

+ added by HAH

ORIGINAL PAGE IS OF POOR QUALITY

HEAO-B CONCERNS RELATED TO FLIGHT SOFTWARE

1. Impact of rate gyro and star tracker performance -- potential problem.

2. CEI Spec anomalies -- paper problem. List attached.

3. On-orbit support of flight software changes -- being worked to an acceptable resolution of just having the equipment readily available.

4. Subsystem Spec (ACDS) -- paper problems. Open

5. Other documents yet to be reviewed -- These include the Flight Program Requirements Document and the CDA package.

6. Test results need to be evaluated -- Software Qualification Test and ACDS (Subsystem) Test. Open until tests are performed and reported.

7. Memory Size -- Considered adequate now with about 1000 words spare and with recent disapproval of many changes by Dr. Speer.

8. Selection of nominal parameter values -- not considered a problem. To be defined before qualification tests begin.

9. Adequate tests of DPA/STA/TA -- component, ACDS, and Observatory tests are considered reasonable.

10. OCC/Van test adequacy -- Considered adequate, uses flight program.

11. Documentation problems -- now solved, to be received per DR.

12. Visibility problems -- now solved by TDY plus copies of changes.

M&S COMPUTING, INC.

P. O. BOX 5183
HUNTSVILLE, ALA. 35805
(205) 772-3411

August 9, 1976

SS-76-121

MEMO TO: System Software File

SUBJECT: Recommended Corrections to HEAO-B Observatory System Specification

REF: HEAO-B Observatory System Specification, Rev. A, MSFC Document 72M10067, November 15, 1974.

In response to an action item requested by the ad hoc HEAO-B ACDS Review Team, a partial review of the referenced document was performed to identify items which need correcting or updating. This review covered only those portions of the document related to the ACDS and its interfaces. The attached list of change recommendations was generated as a result of this review.

G. M. Heeschen, Jr.

RLC/jw

Attachment a/s

Distribution:
EL04 (2 copies)

RECOMMENDED CHANGES TO HEAO-B
SPECIFICATION RELATED TO ACDS

1. Page 3-32, paragraph 3.1.1.2.5.1.3
The last words of the paragraph "... such as the digital computer." do not correctly identify a failure which automatically initiates FSA (only under-voltage does this).
These words should be deleted.

2. Page 3-32, paragraph 3.1.1.2.5.2.1
The last sentence "The rate about the Z axis shall be maintained at less than .1 degree per second." does not show the intent that the observatory must have some rotation (i.e., a zero rate is unacceptable).
The paragraph should be clarified to show the need of a rate about the Z axis. The inclusion of a minimum rate (e.g., .01 degree per second) would provide this clarification.

3. Page 3-33, paragraph 3.1.1.2.5.2.4
The final phrase "... the experiment sensor system is allocated no more than TBD° error." should have the TBD provided.

4. Page 3-35, paragraph 3.1.1.2.5.8.1
The "TBD" in the last sentence should be provided.

5. Page 3-35, paragraph 3.1.1.2.5.8.2
The "TBD" in the last sentence should be provided.

6. Page 3-31, paragraph 3.1.1.2.5.1.1
Mode name, "Sun Point," should be changed to "Normal Sun Acquisition."
Also, in the mode description, this is specified as the mode first entered after deployment from launch vehicle. Description should be changed to delete this specification.

7. Page 3-32, paragraph 3.1.1.2.5.1.3
Mode name, "Sun Point Failure Mode," should be changed to "First Sun Acquisition Mode."
Also, the fact that this is the mode first entered after deployment from the space vehicle should be included in the mode description.

ORIGINAL PAGE IS
OF POOR QUALITY

APPENDIX P

NOTE TO SELTZER FROM KENNEL, DATED 3 SEPTEMBER 1976, SUBJECT: "RESPONSE TO ACTION ITEM NO. 17"

C-1

NOTE 3 Sept 76

TO : S. M. Seltzer/ED12

FROM : H. F. Kennel

SUBJECT: Response to Action Item No. 17.

The action item reads as follows:

"Determine momentum vs. time analysis/simulation status, paying particular attention to 'lazy susan' and any x axis pointing requirement."

The Focal Plane Transport Assembly (FPTA, 'lazy susan') is rotated by a motor through a gear train (170:1) and a harmonic drive (200:1) to bring a different experiment on the optical axis. To assess the maximum angular momentum and the effect on pointing the following data was collected (source in parentheses):

Focal Plane Transport Assembly	
inertia (TRW, MR. Todosiev - estimate)	41.4 sl-ft^2
(AS&E, Mr. Brissette - calculated)	40.4 sl-ft^2
top speed	0.235 RPM
	1.41 °/sec
maximum angular travel (AS&E, Mr. Brissette)	320°
time for max. angular travel	226.7 sec
Acceleration time to top speed (AS&E)	0.021 sec
deceleration time from top speed (AS&E)	0.045 sec
angular momentum at top speed	1.02 ft-lb-sec
Motor & Gear Train	
inertia (TRW, Mr. Todosiev - estimate)	2.4x10^{-5} sl-ft^2
top speed (Mr. Wolf)	8000 RPM
total gear ratio (Mr. Wolf)	34 000 : 1
angular momentum at top speed (TRW, Mr. Todosiev)	0.02 ft-lb-sec
Total Angular Momentum of FPTA, Motor & Gears about vehicle x axis	1.04 ft-lb-sec

The acceleration of the FPTA is so fast that we can consider it instantaneous. We get a vehicle x rate reaction (at EOL x inertia of 1000 sl-ft^2)

vehicle x rate (.235)(41.4)/(1000) 9.73x10^{-3} RPM
0.0584 °/sec

If the x rate remains unopposed by the ACDS (no control)

maximum vehicle x angle (320)(41.4)/(1000) 13.25°

Enc 15

ORIGINAL PAGE IS OF POOR QUALITY

Each reaction wheel can produce torque about the vehicle x axis. However, for 3-RW operation, only the two opposing RW's can do so without disturbance of the y or z axis. We get

max. RW x torque (20)(2)(sin20°)/(12)/(16)	0.0713 ft-lb
time needed by RW's to cancel FPTA momentum	14.6 sec
max. x angle (at time of momentum cancellation) (0.0584) (14.6)/(2)	0.43°

The CEI SPECS state (3.1.1.2.5.2.2) that an angular excursion about an axis in the y-z plane of 1° (0.68 probability) is aceptable. There is no spec about the x axis. Therefore 0.43° max. excursion should be more than acceptable, i.e. there is no problem during Celestial Poining.

It is apparantly desirable (in order to save experiment time) to rotate the FPTA during the maneuver to the next target. As long as the acceleration and deceleration of the FPTA fall into acceleration or deceleration times for the maneuver, there is no problem. A potential problem could arise during the noncontrolled phases of the maneuver when the RW's are saturated and the control commands are nulled as a consequence. The worst case angular deviation about the x axis occurs when the FPTA movement is initiated (and the effect compensated for) during the acceleration period of the maneuver and the FPTA is stopped right after the RW's have saturated for the maneuver coast. An angular rate of 0.0584°/sec will appear about the x axis that could remain unopposed until the deceleration phase of the maneuver begins. For a maneuver of 180° the acceleration and deceleration phases last about 250 sec each and the coast phase about 500 sec. Consequently a x angle of almost 30° could develop. This causes no problem for the sucessful completion of the maneuver, but could be objectionable from other standpoints.

Bottom Line: Reorientation of the FPTA is no problem during Celestial Point. Reorientation during maneuvering could be objectionable from other than ACDS standpoints (thermal, etc.).

Hans F. Kennel

Hans F. Kennel, ED12

APPENDIX Q

ECR BY SHELTON, DATED SEPTEMBER 30, 1976, SUBJECT: "JITTER DEFINITION"

PRECEDING PAGE BLANK NOT FILMED

NUMBER	2. PCN	MSFC ENGINEERING CHANGE REQUEST (See Instructions on reverse)	3. DATE: September 30, 1976	4. PAGE 1 OF 1
5. TO: HA21		6. THRU: EL71	7. FROM: ED12/H. Shelton	

8. TITLE OF CHANGE: Jitter Definition

9. RECOMMENDED PRIORITY: [ ] Emergency [ ] Urgent [XX] Routine

10. NEED DATE: ASAP

11. PROGRAM(S)/PROJECT(S) AFFECTED: HEAO 832-11-01-100

12. END ITEM(S) AFFECTED BY NOMENCLATURE: ACDS

13. RECOMMENDED EFFECTIVITY: ACDS Performance

14. BASELINE DOCUMENTATION AFFECTED (Specs, ICD, etc.): HEAO-B Observatory System Specification Rev A CEI Number KG 0002

15. RELATED CHANGES (ECR, ECP, CR, etc.) BY NUMBER: None

16. JUSTIFICATION FOR CHANGE (Include effect if not incorporated) (If necessary, continue on MSFC - Form 2327-1, continuation sheet):

The word jitter is used several times in section 3.1.1.2.5 in specifying the ACDS requirements. Jitter is often thought of as a rate. In this case, according to Mr. J. Powers (HA24) and Mr. Schwindt (Memo #HA29-76-048) jitter is not a rate. The intended definition should be included in the observatory spec.

17. EFFECTS ON:

[ ] Hardware [ ] Facility [ ] Schedule (See Enclosure _____ for impact) [ ] Other (Specify)
[XX] Software [XX] Requirements Documentation [ ] Cost (Estimated cost included in Enclosure _____)

18. DESCRIPTION OF CHANGE (Include reference to enclosures) (If necessary, continue on MSFC - Form 2327-1, continuation sheet):

At the end of paragraph one (1) under section 3.1.1.2.5.2.2, add: "Jitter (or short term stability) is defined as the attitude error variation allowed in any one (1) second of time. Probability of 0.68 means 0.68 sec of each 1 sec the allowable error must not be exceeded."
Interpretations of jitter other than this can lead to a more complex and costly system and, in fact, can lead to an erroneous design.

19. SIGNATURE OF ORIGINATOR:	DATE:	TELEPHONE NUMBER:	OFFICE SYMBOL:
Harvey L. Shelton Harvey L. Shelton	9/30/76	453-4718	ED12

CONCURRENCE

20. SIGNATURE & ORGANIZATION	DATE	SIGNATURE & ORGANIZATION	DATE
J M Seltzer Sherman M. Seltzer Chief, Pointing Control Systems Br.	30 Sep 76		
James C. Blair Chief, Control Systems Division			
James M. Sisson Deputy Director, Sys Dynamics Lab			

TECHNICAL APPROVAL

SIGNATURE & ORGANIZATION	DATE	SIGNATURE & ORGANIZATION	DATE

MSFC - Form 2327 (Rev. March 1974)

ORIGINAL PAGE IS OF POOR QUALITY

APPENDIX R

MEMO TO SELTZER FROM CARLILE, DATED SEPTEMBER 28, 1976, SUBJECT: "ACTION ITEM: DEFINE WHAT IS MEANT BY PROBABILITY IN SECTION 3.1.1.2.5 ACDS OF 72M10067"

National Aeronautics and
Space Administration

George C. Marshall Space Flight Center
Marshall Space Flight Center, Alabama
35812

NASA

SEP 2 8 1976

Reply to Attn of: HA23-76-733

TO: ED12/S. Seltzer/Chairman HEAO-B ACDS Ad Hoc Group

FROM: HA23/C. Carlile

SUBJECT: Action Item: Define what is meant by probability in Section 3.1.1.2.5 ACDS of 72M10067

Each reference to probability in this section concerns the accuracy of pointing or aiming of either the +X or +Z axes of the observatory. The pointing accuracy is in terms of a half cone angle about a defined reference point or direction.

The reference direction for jitter and stability of pointing should be interpreted as the direction of the axes at any instant of time during celestial point, then measure the error between that direction and the instantanous direction for the specified time period, respectively.

If the error in terms of half cone angle between the reference direction and actual direction is measured and plotted as a distribution curve the probability associated with each parameter is the fraction of the total measured errors falling within the stated error limit.

The measurement of each parameter should be made over a period associated with the respective function.

1. Para. 3.1.1.2.5.2.1 Sun Point - This function is to keep sun on the solar panels and to get star tracker measurements to determine the initial attitude. The period associated with this function should be one orbit.

2. Para. 3.1.1.2.5.2.2 Celestial Point -

2a. The period associated with this function should be the pointing for each target.

ORIGINAL PAGE IS
OF POOR QUALITY

2b. The respective time period for jitter and stability (i.e. 1 sec and 1 hour).

2c. Each desaturation period.

3. Para. 3.1.1.2.5.2.4 Attitude Determination - The period associated with this function should be the pointing for each target.

C. D. Carlile
C. D. Carlile

APPROVAL

TECHNICAL ASSESSMENT OF HIGH ENERGY ASTRONOMY OBSERVATORY-B (HEAO-B) ATTITUDE CONTROL AND DETERMINATION SUBSYSTEM (ACDS)

The information in this report has been reviewed for security classification. The report, in its entirety, has been determined to be unclassified and contains no information concerning Department of Defense or Atomic Energy Commission programs.

This document has also been reviewed and approved for technical accuracy.

CONCURRENCE:

J. T. POWELL/EF01
Director, Data Systems Laboratory

for A. A. McCOOL/EP01
Director, Structures and Propulsion Laboratory

F. BROOKS MOORE/EC01
Director, Electronics and Control Laboratory

J. A. LOVINGOOD/ED01
Director, Systems Dynamics Laboratory

H. E. THOMASON/EL01
Director, Systems Analysis and Integration Laboratory

APPROVAL:

W. R. MARSHALL/EE01
Associate Director for Engineering

☆U.S. GOVERNMENT PRINTING OFFICE 1977—740-049/177 REGION NO. 4