SQT

APPLICATION OF A RUN AROUND COIL SYSTEM

TO

A ROOF FAN HOUSE AT MICHOUD ASSEMBLY FACILITY

AT

NEW ORLEANS, LOUISIANA

(NASA-CR-149887) APPLICATION OF A RUN AROUND COIL SYSTEM TO A ROOF FAN HOUSE AT MICHOUD ASSEMBLY FACILITY AT NEW ORLEANS, LOUISIANA (Meckler (Gershon) Associates, Washington, D. C.) 28 p HC A03/MF A01 G3/44

N77-20561

Unclas 22588

JULY 15, 1976

PREPARED FOR:

NATIONAL AERONAUTICS AND SPACE ADMINISTRATION HEADQUARTERS

FACILITIES ENGINEERING AND MAINTENANCE DIVISION

WASHINGTON, D.C. 20546

MAR 1977
RECEIVED
NASA STI FACILITY
ACQ BRANCH

MAR 1977
RECEIVED
NASA STI FACILITY
INPUT BRANCH

BY:

GERSHON MECKLER ASSOCIATES, P.C.

CONSULTING ENGINEERS

WASHINGTON, D.C.

Gershon Meckler Associates, P.C. • Consulting Engineers
1150 17th Street, N.W., Washington, D. C. 20036, (202) 296-5131

EXECUTIVE SUMMARY

A. INTRODUCTION

Gershon Meckler Associates, P.C. has prepared this report to assess the feasibility of incorporating a "run around coil system" into the existing air washer-reheat system located at Building 103 of the Michoud Assembly Facility (MAF), New Orleans, Louisiana. The concept of the application of the run around coil system has evolved during the feasibility study of the proposed chemical dehumidification system.

The run around coil system consist of two coils, a precooling coil which will be located at up stream and a reheating coil which will be located at down stream of the chilled water spray chamber. This system will provide the necessary reheat in summer, spring and fall. At times, if the run around coil system can not provide the necessary reheat, the existing reheat coil could be utilized.

B. CRITERIA

Analysis of the proposed run around coil system is based upon:

- 40% duty cycle
- Investment costs and pay back periods, calculated according to NASA's "Calculations of "Pay Back" for Direct Energy Projects," directive issued, July 7, 1976.
- Cost of gas $1 per million Btu, per actual billing structure.

C. RESULT OF ANALYSIS

Analysis of the proposed run around coil system indicates that it offers a decrease in steam, electricity and water consumptions as compared with the existing

air washer - reheat system. The reductions in steam, electricity and water consumptions are given below:

Steam - 4,923,514 lb/year

Electricity - 1,857,120 KWH/year

Water - 1,029,696 gallons/year

Investment and payback of the proposed run around coil system are given in the following table:

Total Investment	Cost of Energy		Cost of Water	Total Saving	Simple Pay-back Period
	per 10^6 BTU	per KWH	per 1000 gal		
$	$	$	$	$	Years
1,964,215	1.0	.03	1.50	442,256	4.44
1,964,215	3.6	.03	1.50	1,247,074	1.57

D. RECOMMENDATIONS

Incorporation of a run around coil system into the existing system will significantly reduce energy consumption and cost.

In order to confirm the projected energy consumption and cost savings that may be achieved for the over-all facility, it is recommended that an initial pilot installation be made in a single representative roof fan house on Building #103.

In addition if this system is instrumented, the data obtained will permit direct comparative verification of the energy savings associated with run around coil system based on actual performance. This prototype installation will then serve as a basis for future modifications plantwide, proposed to achieve the projected energy consumption and cost savings.

TABLE OF CONTENTS

EXECUTIVE SUMMARY ii

A. INTRODUCTION

B. CRITERIA

C. RESULT OF ANALYSIS

D. RECOMMENDATIONS

APPLICATION OF A RUN AROUND COIL SYSTEM TO A ROOF FAN HOUSE AT MICHOUD ASSEMBLY FACILITY 1

A. INTRODUCTION

B. DESIGN BASES AND CRITERIA FOR EVALUATION

C. DESCRIPTION OF EXISTING SYSTEM

D. PROPOSED CLOSED LOOP RUN AROUND SYSTEM

E. ANALYSIS

LIST OF FIGURES

Figure 1. System Analysis of Existing System Summer Average Condition 4

Figure 2. System Analysis of Existing System Fall/Spring Average Condition 5

Figure 3. System Analysis of Existing System Winter Average Condition 6

Figure 4. Psychrometric Analysis of Existing System Summer Average Condition 7

Figure 5. Psychrometric Analysis of Existing System Fall/Spring Average Condition 8

Figure 6. Psychrometric Analysis of Existing System Winter Average Condition 9

Figure 7. System Analysis of Run Around System Summer Average Condition 12

Figure 8. System Analysis of Run Around System Fall/Spring Average Condition 13

Figure 9. System Analysis of Run Around System Winter Average Condition 14

LIST OF FIGURES CONTINUED

Figure 10. Psychrometric Analysis of Run Around System, Summer Average Condition 15
Figure 11. Psychrometric Analysis of Run Around System, Fall/Spring Average Condition 16
Figure 12. Psychrometric Analysis of Run Around System, Winter Average Condition 17
Figure 13. Fan House No. 22 Modification Plan 18

APPLICATION OF A RUN AROUND COIL SYSTEM TO A ROOF FAN HOUSE AT MICHOUD ASSEMBLY FACILITY

A. INTRODUCTION

During the feasibility study of the proposed chemical dehumidification system, the idea evolved that reheating air by means of a run around coil system could be economically viable. In this sytem, precooling before and reheating after the air passes through the chilled water spray chamber is provided by means of a closed loop piping arrangement.

This study presents the analysis of such a run around coil system to reduce energy consumption and cost associated with the proposed chemical dehumidification system at the Michoud Assembly Facility, New Orleans, Louisiana.

In the analysis, energy consumption and cost savings of the run around coil system has been evaluated. It is assumed that the system will be installed in a roof fan house on Building #103. Impact of this modification on the central plant utility center serving the entire facility was also evaluated.

B. DESIGN BASES AND CRITERIA FOR EVALUATION

Both the existing and proposed run around coil systems have been analyzed on the same basis :

1.* The required space condition is 75°F, 50% R.H., as called for by the control set points on the 1974 fan house modification drawings.

2.* The sensible heat ratio of the internal space load is 0.62, in accordance with the equipment design as shown on the 1974 fan house modification drawings. This was calculated using 18 Btu/hr ft^2.

*Reconformation of these design conditions was made with the operating personnel at MAF. They state that both design conditions are valid assumptions. However design condition specified in Item 2 should be reconfirmed by accurate on-site measurements.

as the internal sensible load (10 Btu/hr. ft^2 roof load + 8 Btu/hr ft^2 for the people, lights, and equipment), and that the latent load is such to require the present design 54,000 CFM at 50°F saturated air. Therefore, latent load will be equal to:

$$\frac{(54{,}000)(.68)(65 - 54)}{36{,}000\ ft^2} = 11.2\ Btu/hr.ft^2$$

which establishes space sensible heat ratio as:

$$SHR = \frac{18}{18 + 11.2} = 0.62$$

3. Analysis of the local weather data indicates that outside air can be utilized for space cooling and dehumidifies approximately 20% of the annual cycle.

4. At present approximately 25 fan houses operate at any given time for a period of 10 hours per day on single shift operations, 5 days a week.

5. 5 fan houses operate during unoccupied periods, including weekends.

6. The impact of the shuttle External Tank (ET) fabrication will probably require a second shift operation which will increase weekday operation to 20 hours/day - 5 days/week.

   Therefore, based on the above information a duty cycle for the fan houses can be established as:

   $$\text{Duty Cycle}^* = \frac{(20\ \text{units} \times 100\ \text{hrs./wk}) + (5\ \text{units} \times 168\ \text{hrs./wk})}{43\ \text{units (total)} \times 168\ \text{hrs./wk.}} \approx 0.4$$

7. The investment cost and payback periods are calculated according to NASA's "Calculations of "Pay Back" for Direct Energy Projects".

8. Cost of gas $1 per million Btu as per the actual billing structure.

---

* This criterion has been established by assessment report prepared by the Grumman Aerospace Corporation Energy Programs Group, under NASA Contract No. NASI - 14387, Task Order No. 8, Part B.

ORIGINAL PAGE IS
OF POOR QUALITY

C. DESCRIPTION OF EXISTING SYSTEM

The existing HVAC system for the MAF facility consists of a central plant utility building housing high pressure steam boilers generating 210 PSIG high pressure steam and serving approximately 14,000 tons of refrigeration. The refrigeration plant consists of steam turbine driven centrifugal machines which provide 42°F chilled water for air conditioning throughout the facility. 43°F chilled water and 50 psig are distributed to 43 roof mounted fan HVAC systems located in fan houses on the roof of Building #103. These individual HVAC chilled air systems vary in size from 81,000 CFM to 59,800 CFM each for a total of 2,960,000 CFM.

Each chilled air supply system is housed in a separate roof mounted fan house arranged to include fresh air, return air, inlets, mixing plenum, filter section, chilled water spray washer, reheat coil and bypass dampers. Each fan house system is designed to provide 50°F dew point air for cooling and dehumidification.

The spray washer section requires 43°F chilled water to maintain 50°F dew point. The existing chilled air system cools and dehumidifies approximately 90% of the total air stream to 50°F saturated.

The outdoor make-up air entering this system, approximately 10% of the total, mixes with return air and passes through the washer. The air is then reheated, mixed with return air and supplied to the space at approximately 65°F and 55 grains/lb. NASA has had many studies in the past that have highlighted the efficiencies of this system, particularly with respect to the use of a spray washer to provide cooling and dehumidification. However, because of the low cost of fuel in the past and the scarcity of funds available for energy conservation modifications, major system modifications were not implemented.

In 1974, modification was made to upgrade the existing fan houses primarily to replace worn out equipment as required. In addition, a new 4,000 ton chiller was installed in the central utility plant, primarily to provide more efficient loading of the refrigeration plant. Fundamentally the existing system provides dehumidification and cooling requirements by refrigeration and reheating. This process is characterized by a psychrometric path established by the chilled spray washer followed by a reheat coil to maintain proper conditions. Figures 1 through 6 illustrate the

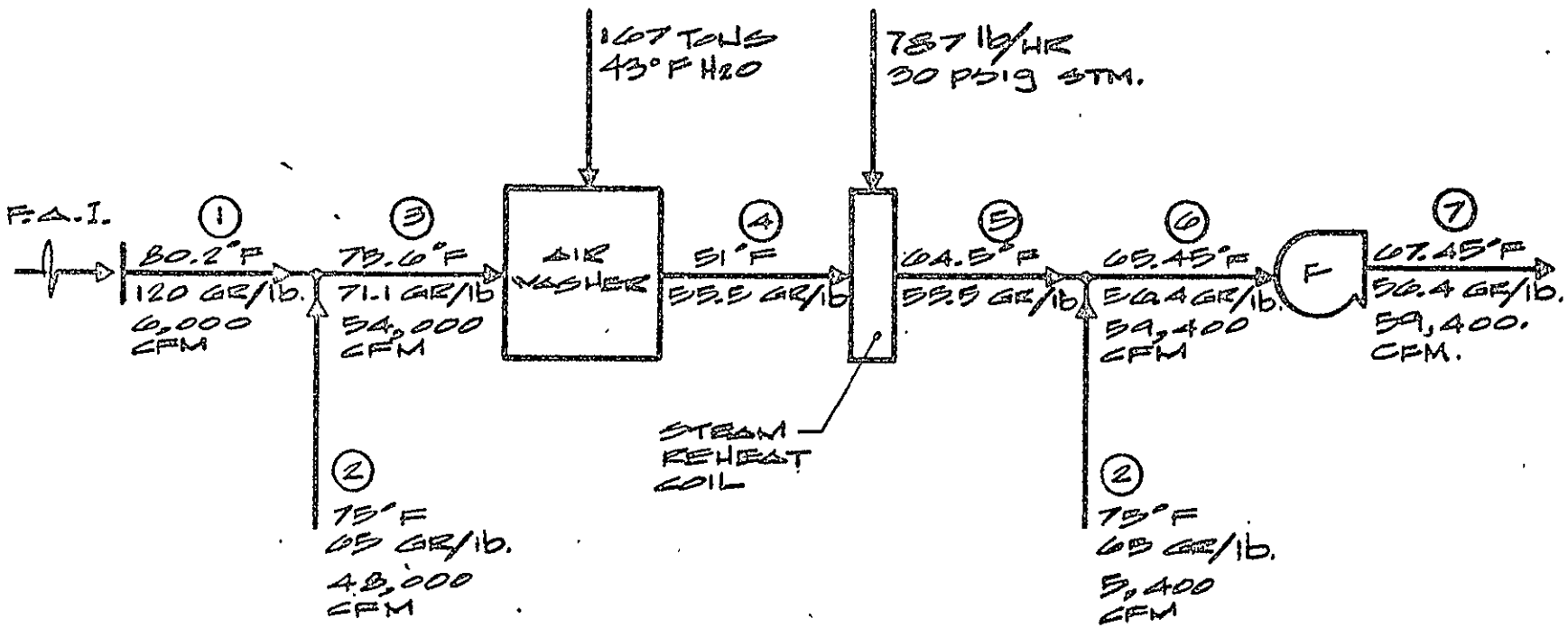

SYSTEM ANALYSIS OF EXISTING SYSTEM

SUMMER AVERAGE CONDITION

FIGURE 1

PRECEDING PAGE BLANK NOT FILMED

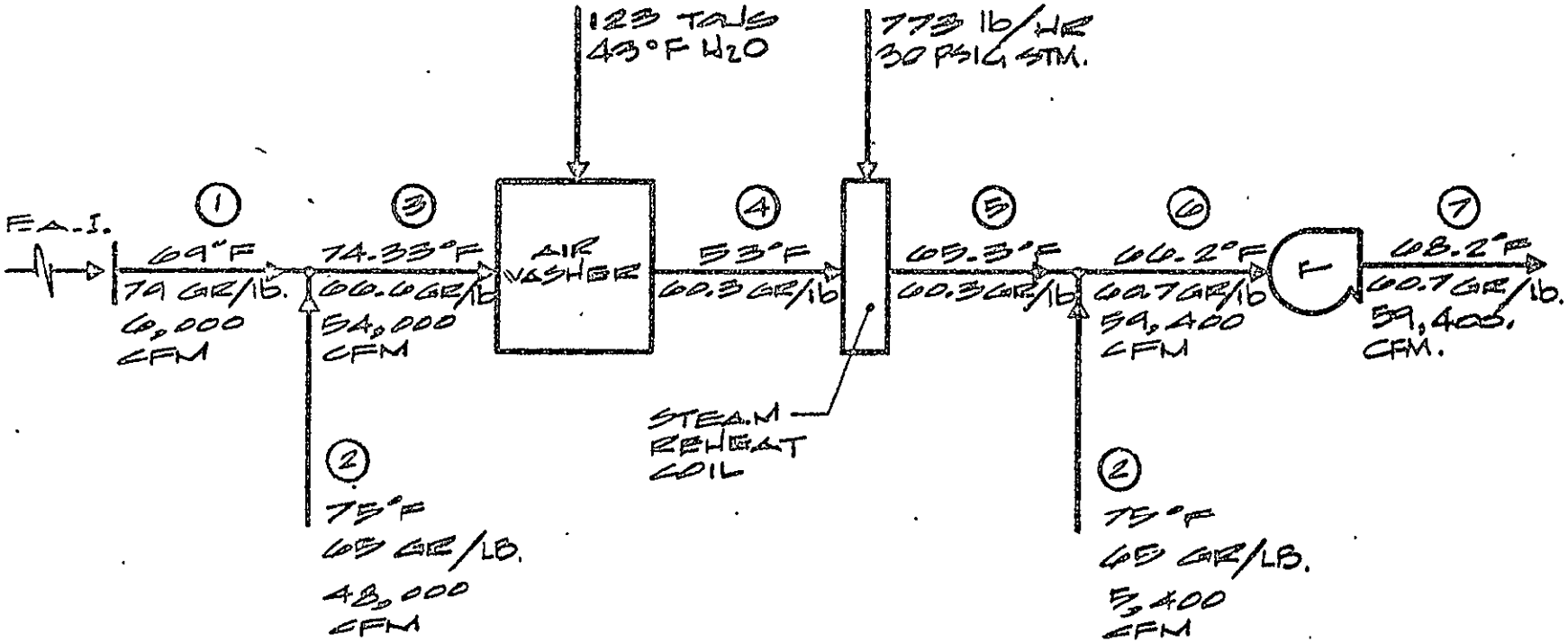

SYSTEM ANALYSIS OF EXISTING SYSTEM

FALL/SPRING AVERAGE CONDITION

FIGURE 2

ORIGINAL PAGE IS
OF POOR QUALITY

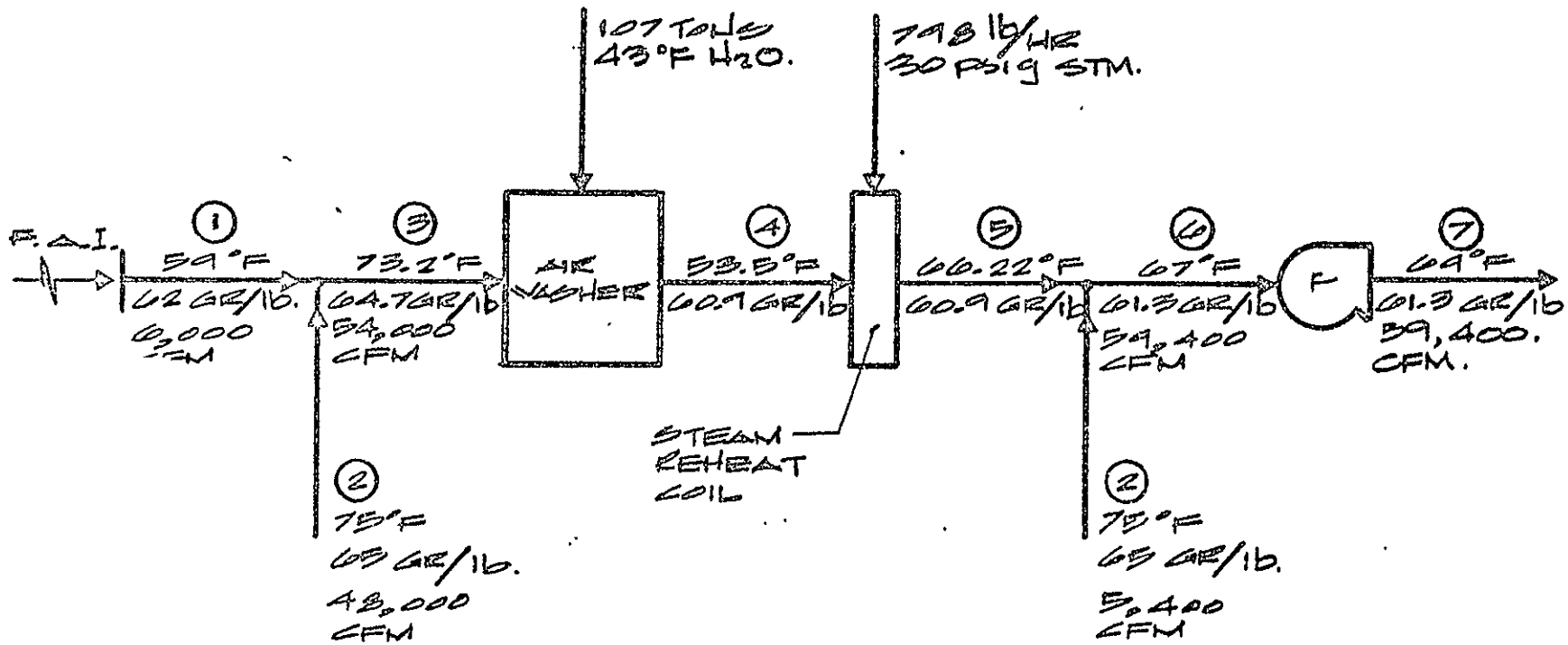

SYSTEM ANALYSIS OF EXISTING SYSTEM

WINTER AVERAGE CONDITION

FIGURE 3.

ORIGINAL PAGE IS
OF POOR QUALITY

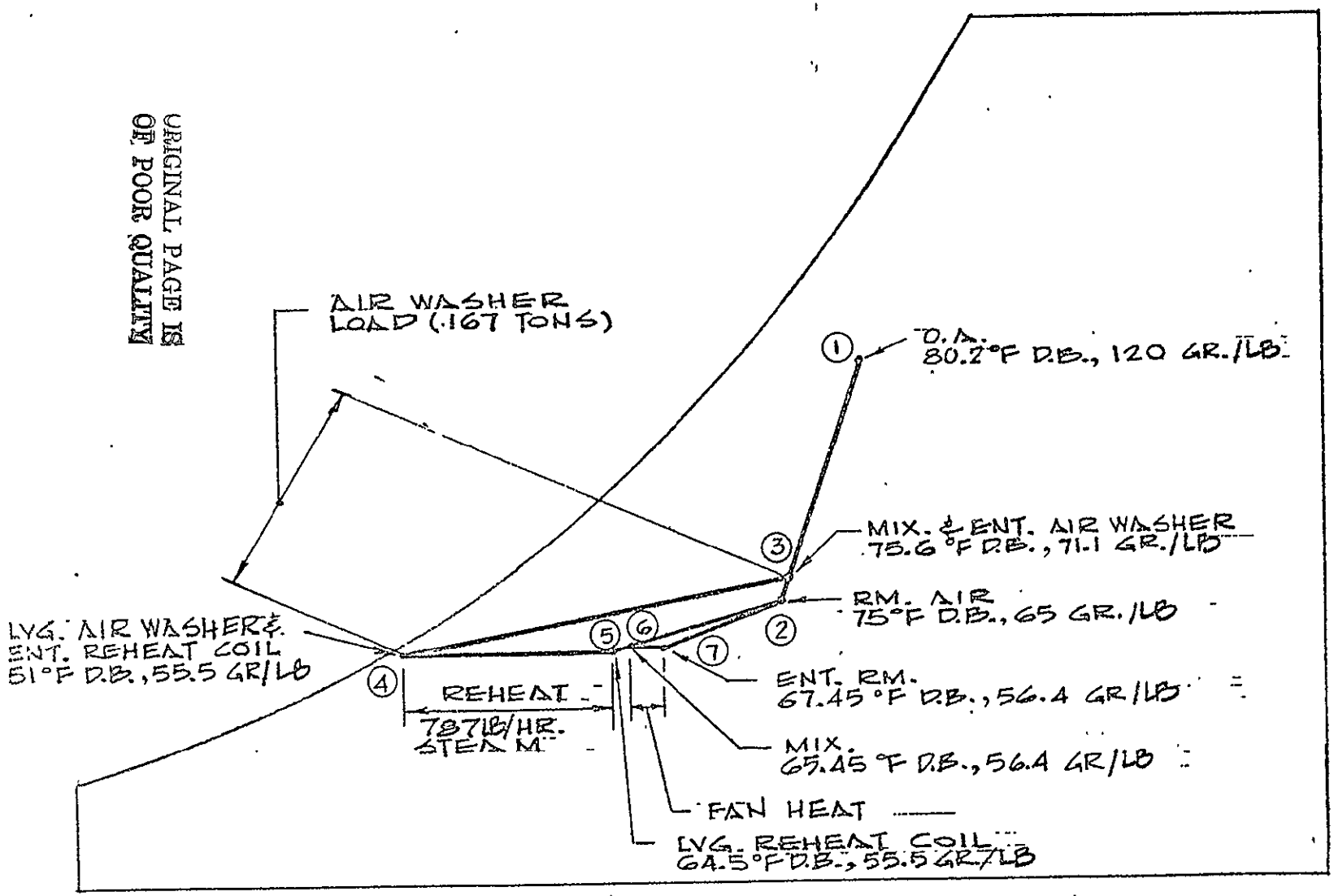

PSYCHROMETRIC ANALYSIS OF EXISTING SYSTEM

SUMMER AVERAGE CONDITION

FIGURE 4

ORIGINAL PAGE IS
OF POOR QUALITY

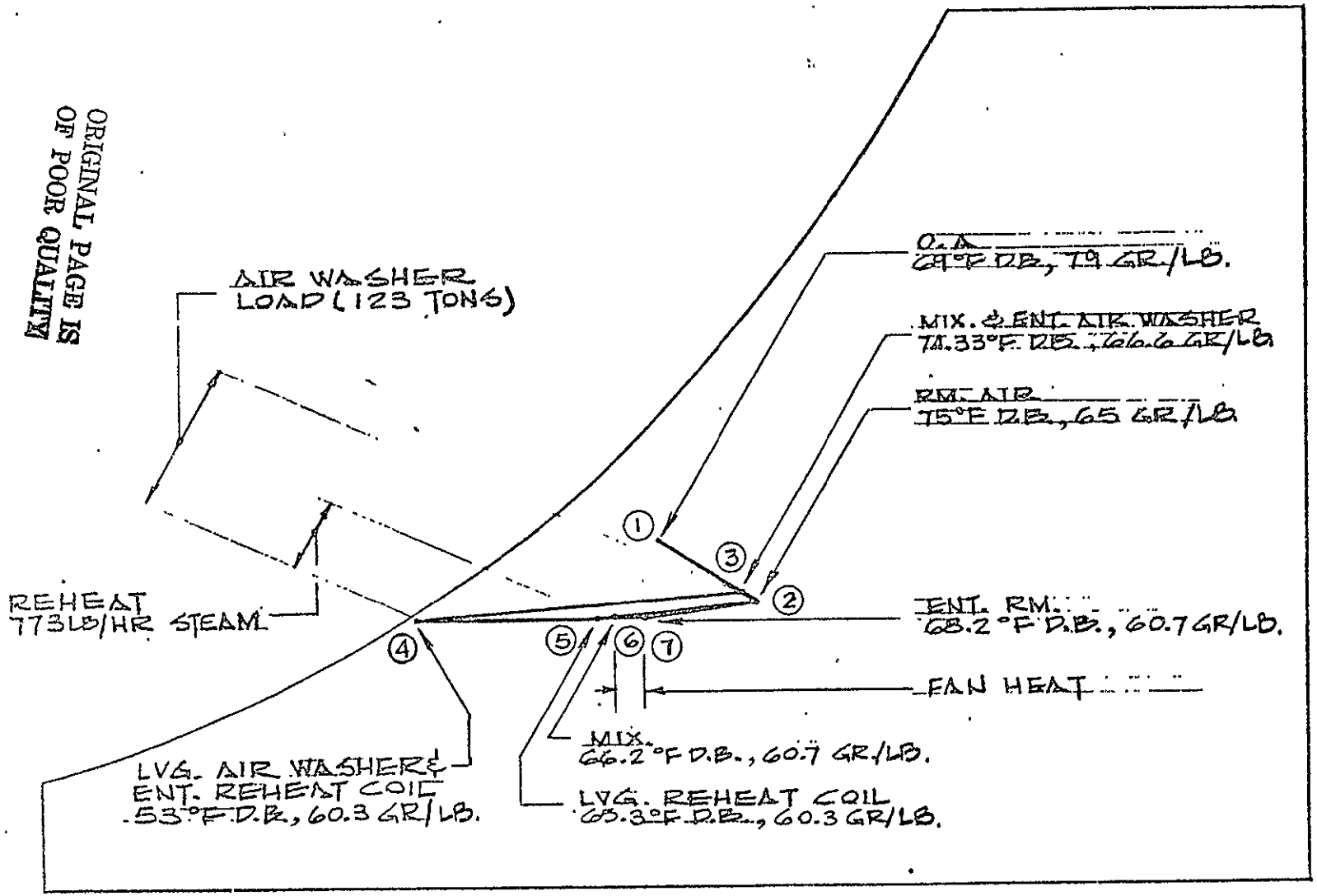

PSYCHROMETRIC ANALYSIS OF EXISTING SYSTEM.

FALL/SPRING AVERAGE CONDITION

FIGURE 5

ORIGINAL PAGE IS
OF POOR QUALITY

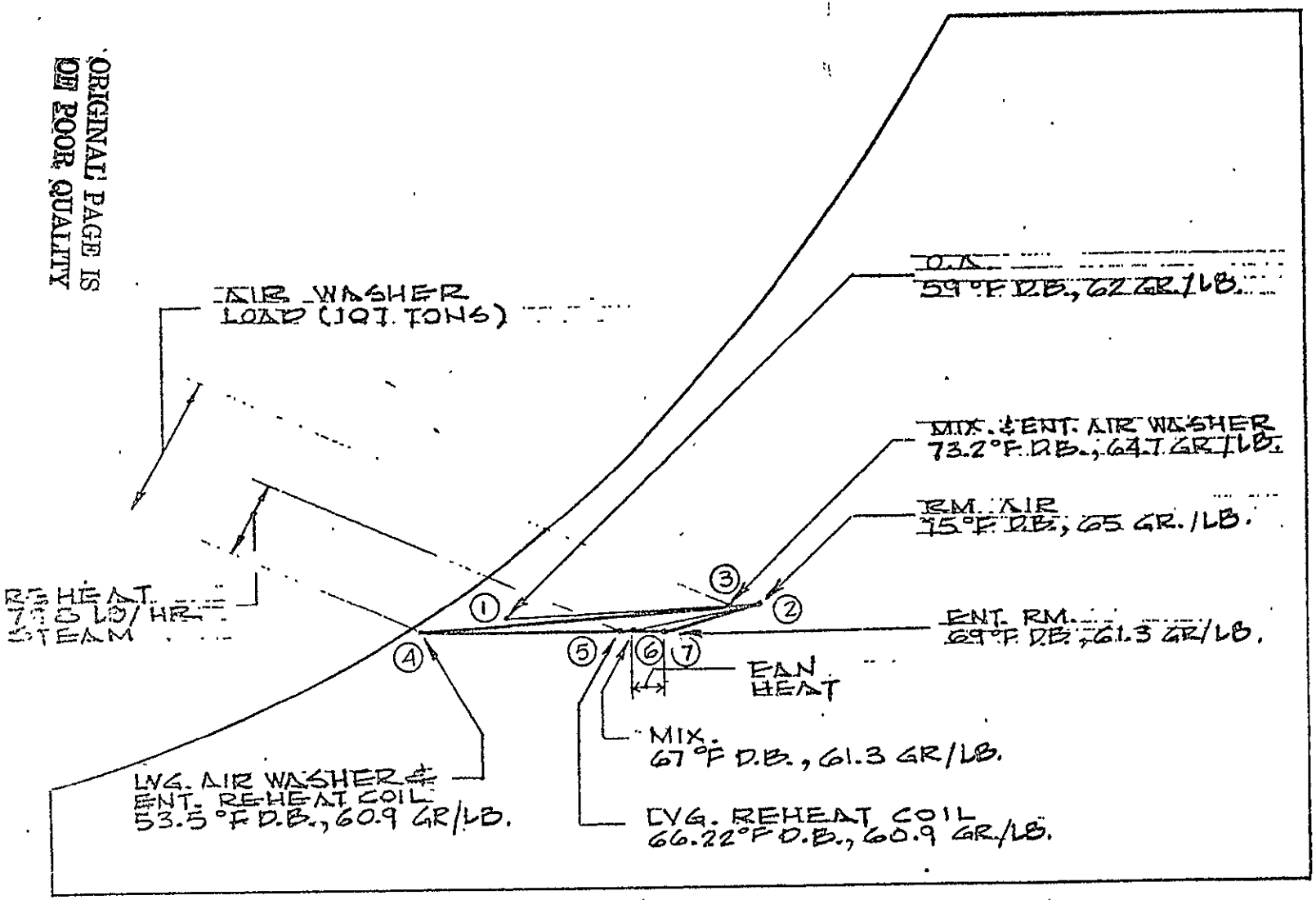

PSYCHROMETRIC ANALYSIS OF EXISTING SYSTEM

WINTER AVERAGE CONDITION

FIGURE 6

system and the psychrometric analysis at different seasoned conditions.

The two key characteristics of the existing system are 1) a minimum of 43°F chilled water is required and 2) reheating must continuously be used to maintain proper balance between dehumidification and sensible cooling. This type of system is wasteful of energy since it requires low temperature refrigeration (43°F chilled water) to achieve the proper dew point for dehumidification control and then must be reheated by steam.

Under partial load conditions the set point of the air handling unit discharge air temperature can only be increased to a maximum of 3.5°F from its original setting and still maintain the required relative humidity in the conditioned space.

D. PROPOSED CLOSED LOOP RUN AROUND SYSTEM

In a run around coil system, coils are placed before and after the cooling and dehumidifying apparatus, and a fluid, usually water, is circulated between the two coils. Heat removed from the warm air by the precooling coil is carried by the circulating fluid to the reheating coil on the downstream side of the cooling coil. In this way the amount of heat added during reheating is exactly offset by the amount of heat removed from the air during precooling. Consequently, no increase in refrigeration capacity is needed for the reheating of the air when the run around coil cycle is used.

When using the run around coil cycle steam need not be used because all of the heat used in reheating the chilled air is obtained from the warm air. Because no steam is needed and because the existing refrigerating capacity can be decreased, the operating cost of this method of reheating is lower than the cost of any other method.

The use of the run around coil system is desirable not only because air can be reheated without the use of steam during the summer, but also because the physical size and horsepower of the existing refrigerating plant can be reduced.

Figures 7 through 12 illustrate the system and psychrometric analysis of the run around coil system at different seasonal conditions.

The modifications to the existing system consist of:

- Readjusting the automatic dampers of the existing system to reduce the quality of air passing through the air washer as shown on the flow diagrams.
- Cooling and dehumidifying the air through existing air washer to 48°F DB and 46 GR/lb instead of 51°F DB and 55.5 GR/lb.
- Adding run-around system with the cooling coil before the air washer and the heating coil after the air washer. The run-around system will provide the reheat required to satisfy the space condition, the energy added to the air through the heating coil will be extracted from the air before entering air washer, which will reduce the air washer cooling load.
- Utilizing the existing steam heating coil the steam coil will provide any additional reheat beyond the capability of the run-around system if needed in case of partial load at low dry outside temperatures. Also, the steam coil can serve as the heating coil in winter season when the outside air temperature is below 35°F.

Figure 13 shows a modification plan to Fan House #22 for incorporating the proposed run around coil system.

ORIGINAL PAGE IS OF POOR QUALITY

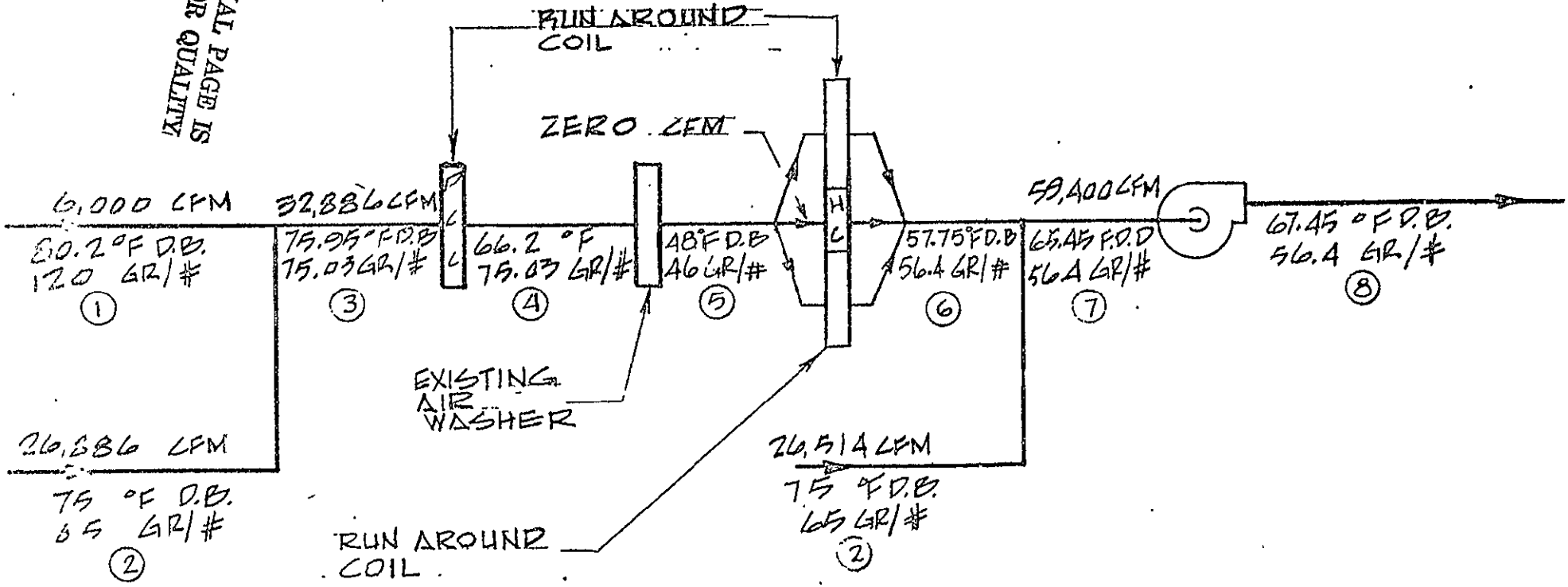

SYSTEM ANALYSIS OF RUN AROUND SYSTEM

SUMMER AVERAGE CONDITION

FIGURE 7

ORIGINAL PAGE IS
OF POOR QUALITY

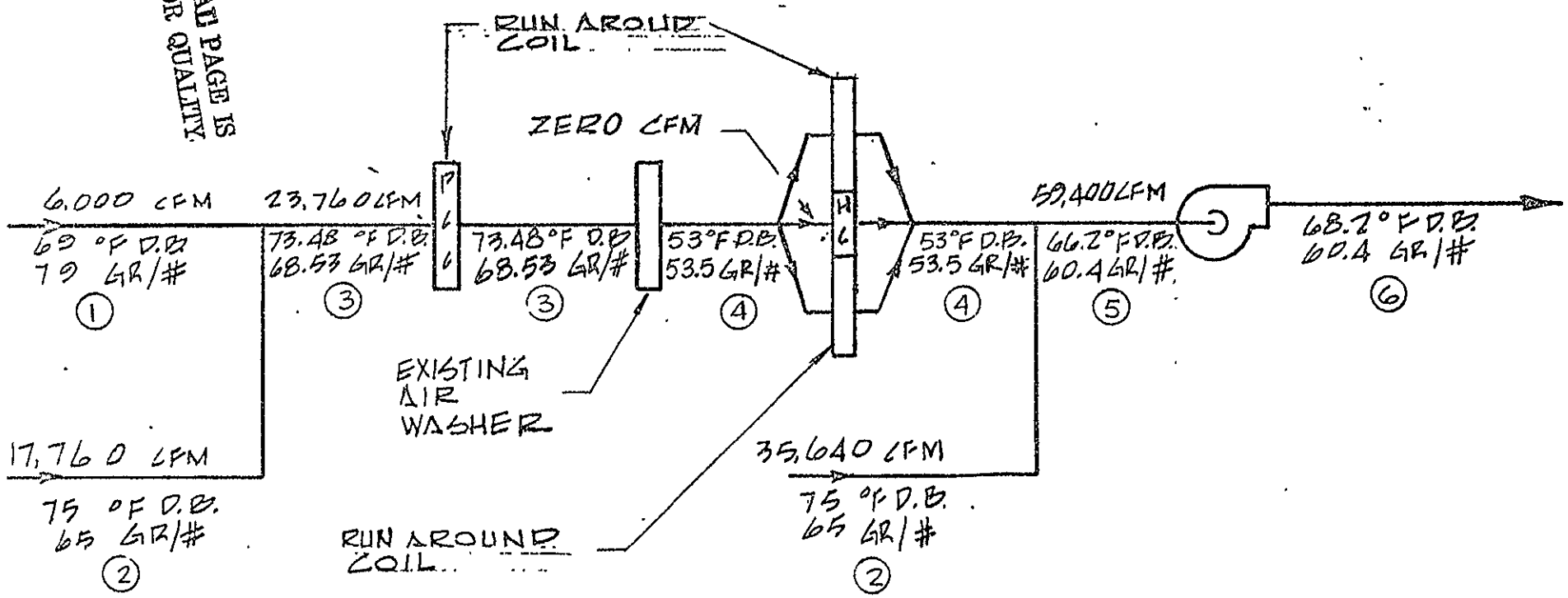

SYSTEM ANALYSIS OF RUN AROUND SYSTEM

FALL/SPRING AVERAGE CONDITION

FIGURE 8

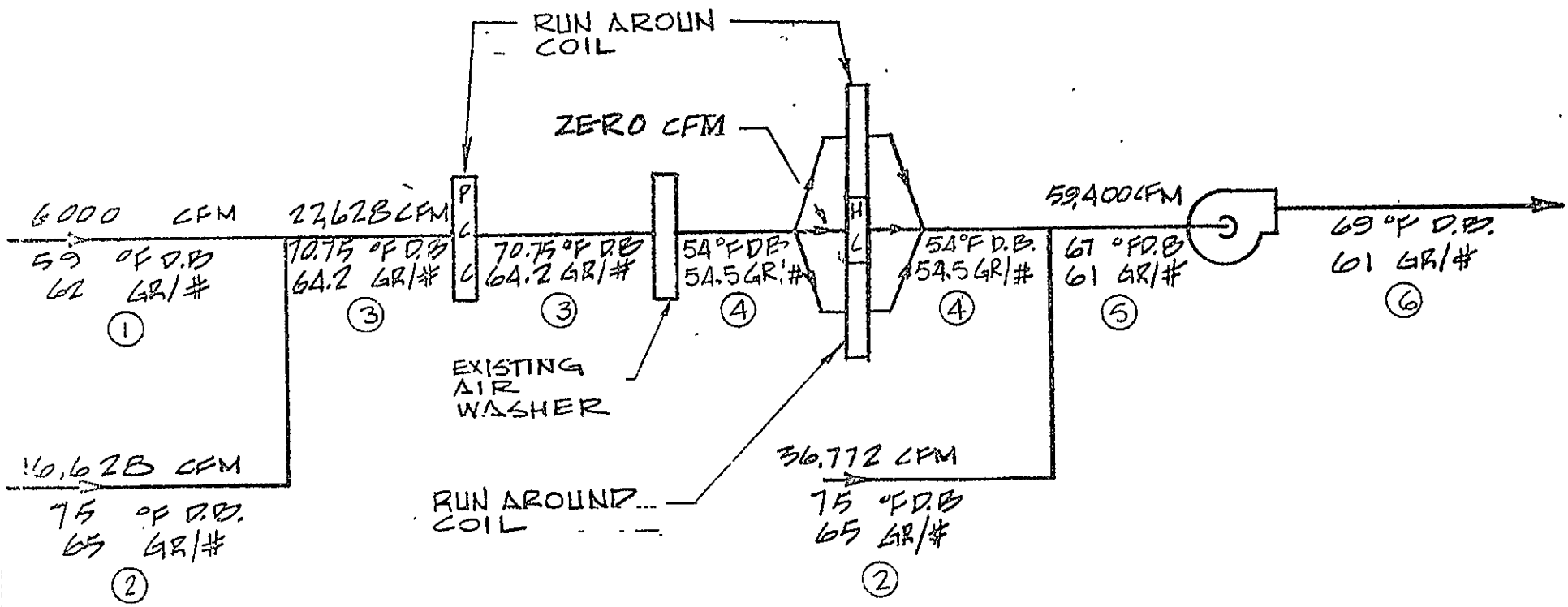

SYSTEM ANALYSIS OF RUN AROUND SYSTEM

WINTER AVERAGE CONDITION

FIGURE 4

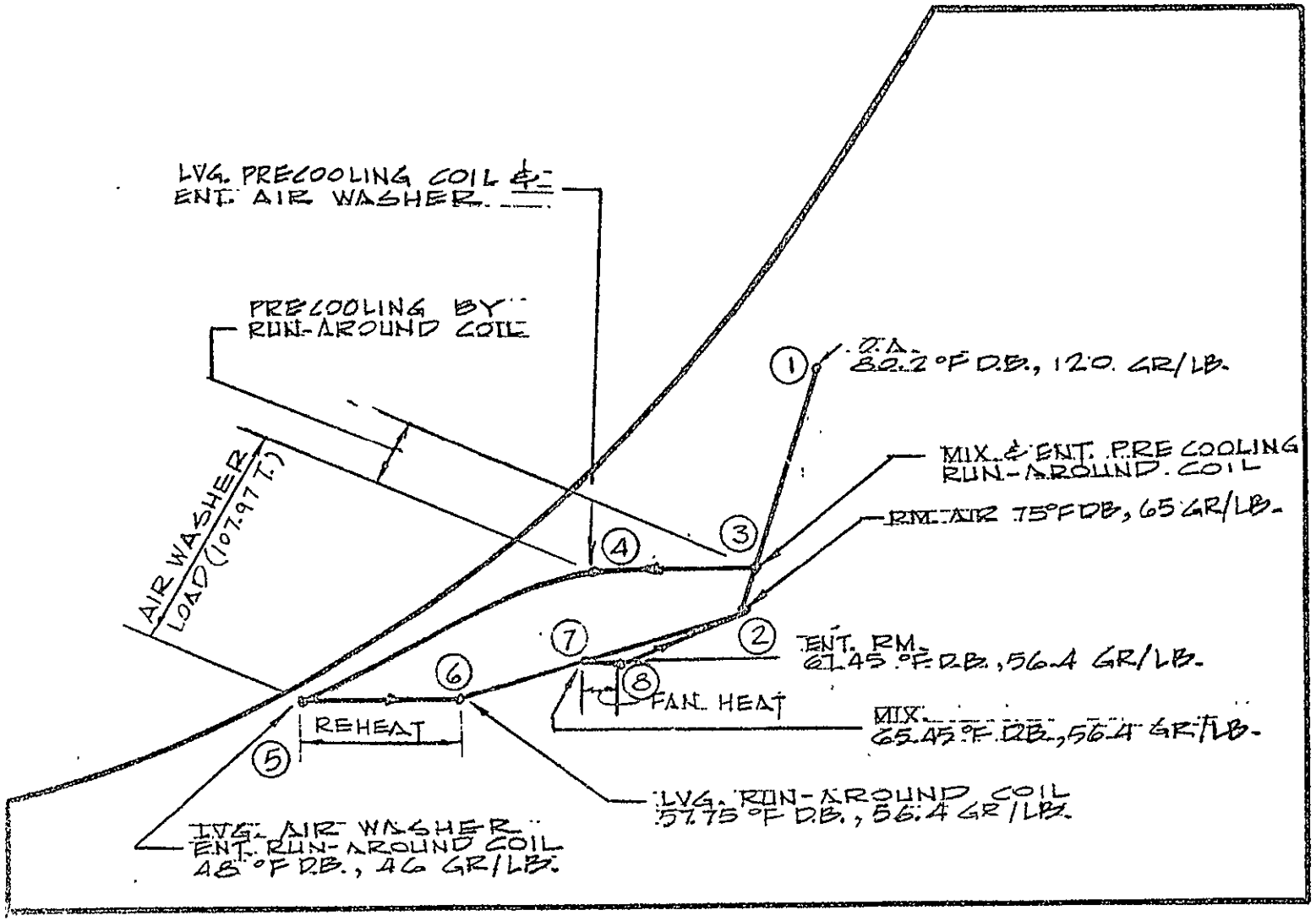

PSYCHROMETRIC ANALYSIS OF RUN AROUND SYSTEM

SUMMER AVERAGE CONDITION

FIGURE 10

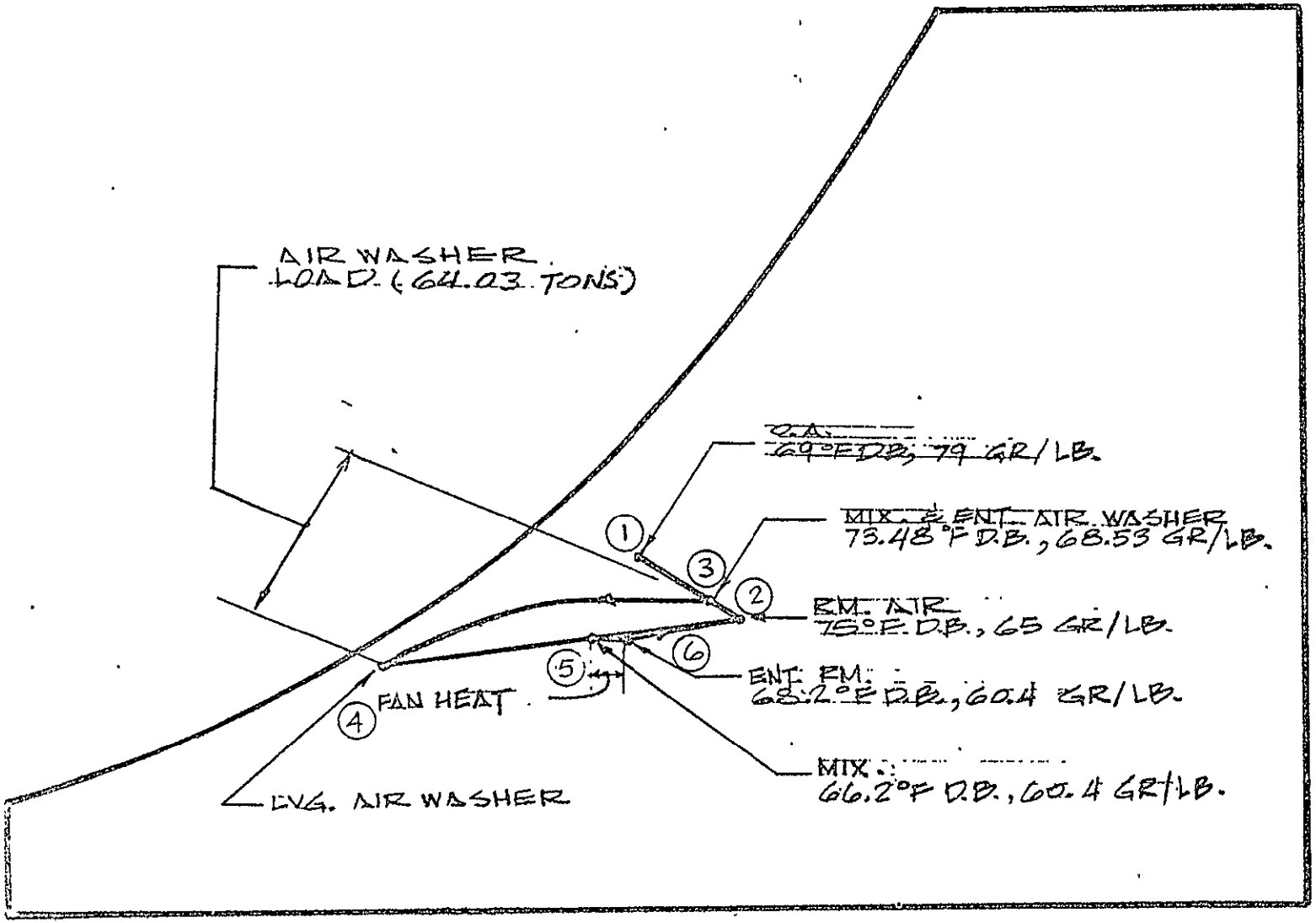

PSYCHROMETRIC ANALYSIS OF RUNAROUND SYSTEM

FALL/SPRING AVERAGE CONDITION

FIGURE 11

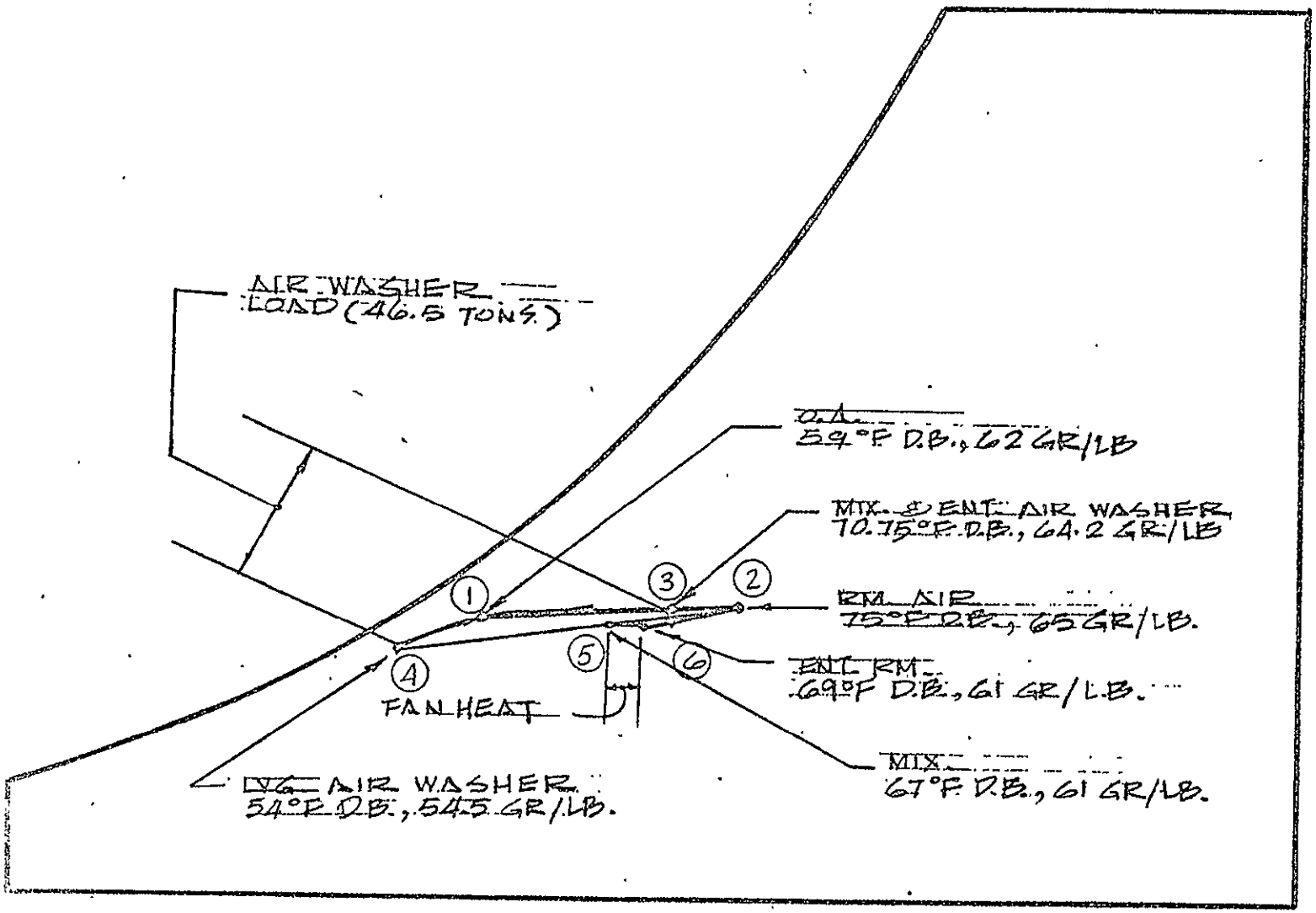

PSYCHROMETRIC ANALYSIS OF RUN AROUND SYSTEM

WINTER AVERAGE CONDITION

FIGURE 12

ORIGINAL PAGE IS
OF POOR QUALITY

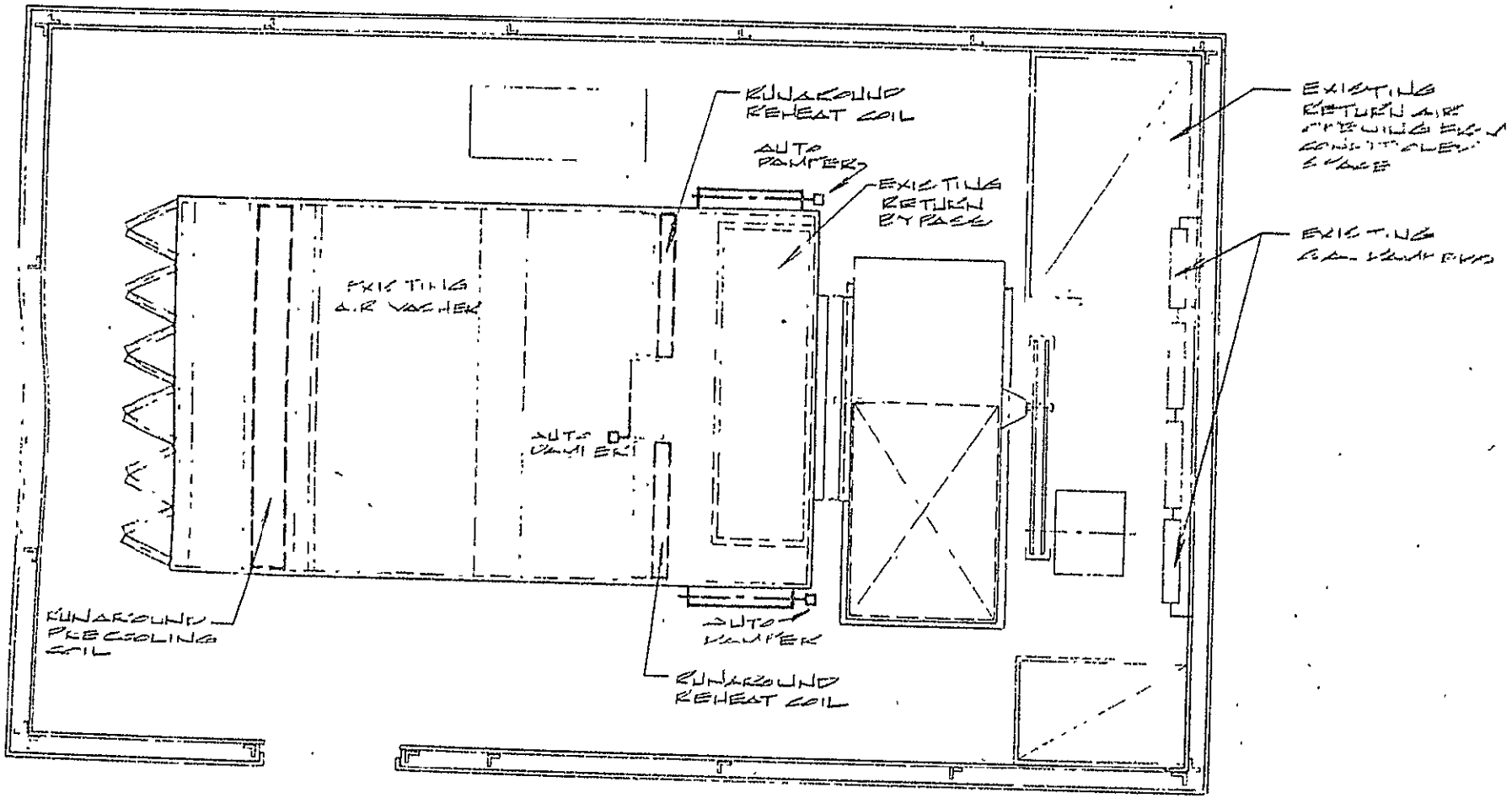

FAN HOUSE No. 22 MODIFICATION PLAN (RUNAROUND SYSTEM)

FIGURE 13

E. ANALYSIS

Comparative energy consumption analysis between the existing and proposed modification to include a run around system has been made based on:

- The existing Fan House #22 system supplied approximately 59,000 CFM out of a total of 2,986,300 CFM for Building #103. This represents 2% of the chilled air volume serving Building #103. The energy savings and cost of modification associates with Fan House #22 were scaled to establish the over-all payback period for the entire facility.

- The average hourly steam consumption generating chilled water and reheat has been established using 24 hour average weather data for MAF, New Orleans, La. The weather data used are as follows:

Average D.B.	June-Sept.	80.2°F
Average D.P.	June-Sept.	72.4°F
Average D.B.	Dec.-March	57.1°F
Average D.P.	Dec.-March	51.3°F
Average D.B.	Oct.-Nov.-Apr.-May	69.0°F
Average D.P.	Oct.-Nov.-Apr.-May	60.3°F

- The utility costs are as follows:

Steam:	$\$3.60/10^6$ Btu
Natural Gas:	\$1/MCF
Electric:	\$0.03/KWH

1. STEAM CONSUMPTION OF THE EXISITNG SYSTEM

a) Summer Season

- Refrigeration

$$(167 \text{ tons}) \times (16 \frac{\text{lb steam}}{\text{ton}}) \times (24 \frac{\text{hours}}{\text{day}}) \times (122 \frac{\text{days}}{\text{seasons}}) \times$$

$$(0.4 \text{ duty cycle factor}) = 3{,}129{,}466 \text{ lb steam}$$

- Reheat

$$(847 \frac{\text{lb steam}}{\text{hour}}) \times (24 \frac{\text{hrs}}{\text{day}}) \times (122 \frac{\text{days}}{\text{seasons}}) \times (0.4 \text{ duty cycle factor})$$

$$= 992{,}006 \text{ lb steam}$$

b. Fall/Spring Season

- Refrigeration
  (123) x (16) x (24) x (122) x (.4) = 2,304,922 lb steam
- Reheat
  (773) x (24) x (122) x (.4) = 905,388 lb steam

c. Winter Season

- Refrigeration
  (107) x (16) x (24) x (48) x (.4) = 788,890 lb steam
- Reheat
  (798) x (24) x (48) x (.4) = 367,718 lb steam

d. Total steam consumption = 8,488,320 lb steam per yr

2. STEAM CONSUMPTION OF PROPOSED RUN AROUND SYSTEM

a. Summer Season

(107.97) x (16 x 24 x 122 x .4) = 2,022,662 lb steam

b. Fall & Spring Season

(64.03) x (16) x (24) x (122) x (.4) = 1,199,309 lb steam

c. Winter Season

(46.5) x (16) x (24) x (48) x (.4) = 342,835 lb steam

d. Total steam consumption = 3,546,806 lb steam per yr

3. ANNUAL STEAM SAVINGS

8,488,320 - 3,564,806 = 4,923,514 lb steam per yr

4. ELECTRIC ENERGY ANALYSIS

a. Added pump energy due to the run around coil system is .5 KW.

b. Central plant electrical energy savings

- Cooling tower pumps - 230 KW
- Cooling tower fans - 272 KW
- Chilled water pumps - 161 KW

Total KW saved 663 KW

c. Net KW saved

663 - 0.5 = 662.5 KW

d. Net KWH saved

662.5 x 8760 x .4 x .8 = 1,857,120 KWH

5. COOLING TOWER MAKE UP WATER COST

a. Average refrigeration tonnage saved (for all seasons)

$$\begin{pmatrix}\text{Existing system tonnage}\\ \text{average for all seasons}\end{pmatrix} - \begin{pmatrix}\text{Proposed system tonnage}\\ \text{average for all seasons}\end{pmatrix} =$$

$$= \frac{(167 + 123 + 107)}{3} - \frac{(108 + 64 + 47)}{3} = 59.0 \text{ Tons}$$

b. Average refrigeration tonnage saved per year per fan house

59 Tons x 292 days x 24 $\frac{\text{hours}}{\text{per day}}$ x .4 duty factor = 166,030 Ton-Hour

c. Water saved per year

= 166,030 x 6.2 (Evaporation rate factor for steam driven compressors)

= 1,029,696 Gallons

d. Water saved per year for the entire facility
1,029,696 x 50.3* = 51,793,708 Gallons

6. CAPITAL INVESTMENTS

Run-around coils and piping	$22,000
Controls	5,000
Fan house modifications	8,000
Electrical work	500
Miscellaneous Items (10%)	3,500
Capital investment per fan house	$39,050

For the entire facility
50.3 x 39,050 = $1,964,215

7. PAYBACK ANALYSIS

a. Simple payback

- Steam

$$\frac{4{,}923{,}514 \frac{\text{lb}}{\text{year}} \times 1000 \frac{\text{BTU}}{\text{lb}} \times \frac{1 \quad \$}{10^6 \text{ BTU}}}{0.8 \text{ (Efficiency)}} = \$6{,}154 \text{ per Fan House}$$

For the entire facility

$1/10^6$ BTU: 50.3 x 6,154 = $309,546

$3.60/10^6$ BTU: 3.60 x 50.3 x 6,154 = $1,114,366

*50.3 is a scale factor and it is calculated as:

$$\frac{\text{Total CFM for Building \#103}}{\text{CFM for Fan House \#22}} = \frac{2{,}986{,}300}{59{,}400} = 50.3$$

- Electricity

  663 x 8760 x .4 x .8 x .03 = 55,755 $/year

  Energy used by added pump

  .5 x 50.3 x 122 x 24 x .4 x .8 x .03 = 735 $/year

  Net Savings in electrical energy cost

  55,755 - 735 = 55,020 $/year

- Tower water make up

  $51{,}793{,}708 \frac{\text{gallons}}{\text{year}} \times 1.5 \frac{\$}{\text{Gallons}} = \$77.690$

- Payback

  Total savings for entire facility

  $\$1/10^6$ Btu: 309,546 + 55,020 + 77,690 = $442,256

  $\$3.60/10^6$ Btu: 1,114,366 + 55,020 + 77,690 = $1,247,076

  The payback period for $\$1/10^6$ Btu: $\frac{1{,}964{,}215}{442{,}256} = 4.4$ years

  The payback period for $\$3.60/10^6$ Btu $\frac{1{,}964{,}215}{1{,}247{,}076} = 1.57$ years