STUDY OF HARDWARE APPLICATION OF AIRBORNE LASER DOPPLER SYSTEM FOR SEVERE STORMS MEASUREMENT

FINAL REPORT

CONTRACT NAS 8-31721

Prepared For

GEORGE C. MARSHALL SPACE FLIGHT CENTER
NATIONAL AERONAUTICS AND SPACE ADMINISTRATION
HUNTSVILLE, ALABAMA 35812

Prepared By

RAYTHEON COMPANY
EQUIPMENT DEVELOPMENT LABORATORIES
ADVANCED DEVELOPMENT LABORATORY
ELECTRO-OPTICS DEPARTMENT
SUDBURY, MASSACHUSETTS 01776

(NASA-CR-150244) STUDY FOR HARDWARE APPLICATION OF AIRBORNE LASER DOPPLER SYSTEM FOR SEVERE STORMS MEASUREMENT Final Report (Raytheon Co.) 86 p HC A05/MF A01 CSCL 20E
N77-22465
Unclas
G3/36 25127

MAY 1977
RECEIVED
NASA STI FACILITY
ACQ BRANCH

MAY 1977
RECEIVED
NASA STI FACILITY
INPUT BRANCH

RAYTHEON COMPANY
EQUIPMENT DIVISION

FINAL REPORT

STUDY OF HARDWARE APPLICATION OF AIRBORNE LASER DOPPLER SYSTEM FOR SEVERE STORMS MEASUREMENT

CONTRACT NAS 8-31721

ER77-4036 16 February 1977

Prepared for

NATIONAL AERONAUTICS AND SPACE ADMINISTRATION
GEORGE C. MARSHALL SPACE FLIGHT CENTER
MARSHALL SPACE FLIGHT CENTER, ALABAMA 35812

Prepared by

RAYTHEON COMPANY
Equipment Development Laboratories
Advanced Development Laboratory
Electro-Optics Department
Sudbury, Massachusetts 01776

TABLE OF CONTENTS

SECTION		PAGE NO.
1	INTRODUCTION	1-2
2	STORM BEHAVIOR	2-1
3	PULSED LDV SYSTEM REQUIREMENTS	3-1
4	TWO DIMENSIONAL PULSED LDV FOR SEVERE STORM MEASUREMENTS	4-1
	4.1 Introduction	4-1
	4.2 Present CAT Syste	4-2
	4.3 Two Dimensional Scanner	4-5
	4.3.1 Design Goals	4-5
	4.3.2 Scanner Design	4-6
	4.3.3 Environmental Considerations	4-14
	4.3.4 Aircraft Interface	4-15
	4.3.5 Conclusions	4-15
	4.4 Digital Processor	4-16
	4.5 Data Processing	4-20
	4.5.1 Introduction	4-20
	4.5.2 Data Rates	4-22
	4.5.3 Registration of Data Points	4-24
	4.5.4 Real Time Velocity Field Processing	4-28
	4.5.5 Post Analysis	4-35
	4.6 TEA Laser System	4-36
5	THREE DIMENSIONAL SEVERE STORM MEASUREMENT SYSTEM	5-1
	5.1 Introduction	5-1
	5.2 Data Analysis	5-3
	5.3 Three Dimensional Scanner	5-4
	5.3.1 Design Goals	5-4
	5.3.2 Design Concepts and Trade-Off's	5-7

TABLE OF CONTENTS (Cont'd)

SECTION		PAGE NO.
	5.4 Conclusions	5-16
6	CONCLUSIONS	6-1
7	REFERENCES	7-1

LIST OF ILLUSTRATIONS

FIGURE		PAGE NO.
3-1	Scan Concept	3-3
3-2	Determining Storm Translation From Radar Returns	3-7
3-3	Processor Concepts	3-10
3-4	Effect of Atmospheric Attenuation	3-11
4-1	Aircraft Flight Data for 2-D Measurement with CAT System	4-4
4-2	60° Grid Pattern	4-7
4-3	90° Grid Pattern	4-8
4-4	Typical Grid Pattern (Expanded)	4-9
4-5	Rotating Telescope Scanner	4-11
4-6	2-D Scanner Design Concept	4-12
4-7	Signal Processor Block Diagram	4-18
4-8	Registration with Stationary Storm and Flight Path	4-25
4-9	Registration with Storm Movement and Flight Variations	4-27
4-10	Registration of Data Points	4-29
4-11	Severe Storms Measurement Data Analysis Program	4-30
4-12	Setup of Data Storage	4-33
5-1	Three Possible Flight Profiles	5-2
5-2	Typical 3-D Scan Pattern	5-5
5-3	3-D Scanner Locations	5-8
5-4	Cabin Location of Wedge Scanner	5-10
5-5	Typical Wedge Scan Pattern	5-11
5-6	Cargo Hold Scanner Location	5-14
5-7	Pod Mounted 2-Axis Mirror Scanner	5-15

SECTION 1

INTRODUCTION

A need exists for a remote sensing instrument to measure the velocity flow fields associated with severe storms. Presently, this data is obtained with conventional Dopper radar which is most effective for making measurement in the regions of precipitation. A CO_2 laser system has the advantage that a significant amount of its energy is backscattered from the aerosols normally present in clear air. Pulsed and continuous wave CO_2 laser Doppler velocimeters have been shown to be capable of measuring wind velocity in situations involving clear air turbulence, aircraft wake vortices, dust devils, and other atmospheric phenomena. The purpose of this study is to determine the hardware requirements for an airborne pulsed CO_2 laser Doppler velocimeter for severe storm measurements.

The specifications for the system may be determined using data concerning severe storms. First, it is necessary to determine what velocities are to be measured and the required scales of size, velocity, and time. These parameters, discussed in Section 2, result in a system configuration and performance specifications which are discussed in Section 3. That section contains the hardware requirements for a severe storm measurement system. These include: the overall system configuration and the requirements for the scanner, the processor, the laser, and the data analysis.

Section 4 discusses the components required to meet the specifications given in Section 3. It is shown that, while the present CAT system is not sufficient to meet all the requirements, it can become the basis of an operational system with the addition or replacement of several components. Section 4 shows how the CAT system can be modifield in several steps, to become an operational severe storm measurement system. In Section 4.2, a description of the data obtainable from the CAT system in a typical thunderstom is considered. It is shown that, while some one dimensional data could be obtained, the system would not have adequate capability for measuring two dimensional

velocity flow fields and would not meet the required resolution specifications. It will be shown that the principal limitations of this instrument are; 1) the lack of a scanner, 2) limitations on the current processor, and 3) limitations on maximum range due to the available laser energy. The remaining sections involve additional hardware elements required to develop the existing CAT instrument into a viable system for making severe storm measurements. The first requirement is a scanner to permit the system to cover a large area in the storm. Section 4.3 describes a two dimensional scanner which permits two measurements at each point in a plane from different directions, to permit measurement of a two dimensional velocity vector. It is necessary to know the position of the scanner and the position and orientation of the aircraft relative to the storm very accurately to obtain the required resolutions. The next requirement is a processor which is capable of making the velocity data from all ranges available to a real time data analysis system. The processor should have considerable flexibility to meet the needs of specific measurements, and should allow for various pulse widths and repetition rates, and provide for pulse to pulse integration. A potential design for this type of processor is discussed in Section 4.4.

With the addition of the scanner and processor, the present CAT instrument would have a limited capability for measuring severe storm velocity flow fields. Thus, Section 4.5 addresses the problem of how to process the data collected from the system. The data analysis system is considered with regard to the registration problem, the ability to obtain velocity components, the requirements for display and recording of the data, and the requirements for a system performance evaluation.

With this system, the severe storm measurements could be made, but would be limited to regions and times during which the atmospheric attenuation coefficient was low. In order to have a

reasonable adverse weather capability, it is necessary to have a laser transmitter with increased power. A hybrid TEA laser system is discussed in Section 4.6. With these components, the severe storm measurement system would be capable of making measurements of the two dimensional velocity flow field in a horizontal plane, under a variety of conditions.

Consideration has been given in Section 5 to the development of a three dimensional severe storms measurement system. This would require an extensive design effort, but would lead to a system capable of measuring a severe storm at a variety of altitudes, in a single aircraft pass.

SECTION 2

STORM BEHAVIOR

In determining the requirements of the Severe Storm Measurement System, it is important to use the available knowledge of storm behavior. The results of a study[1] of severe storm behavior will be reviewed to show how the characteristics of a severe storm affect the design of the Laser Doppler Velocimeter. These characteristics will then be used to determine the type of scan to be used in the LDVS and the parameters required of the system for a successful performance of the severe storm measurement program. It is necessary to specify the time scales characteristic of storm lifetimes and of changes within a storm, as well as the required coverage and resolution in space and velocity. A typical severe storm has a lifetime as short as 30 minutes and changes within the storm occur over periods typically ranging from 2 to 5 minutes. It is desirable to make as many measurements of the storm as possible to permit observation of the changes which occur in this 2 to 5 minute time scale. In addition, this time scale determines the length of time which can be used to make a velocity measurement which requires that the velocity not change during the measurement time. During this time, it may be assumed that the storm is transported at its approach velocity, but that no internal changes occur in the storm.

A storm may be divided into three different areas. The first area, the main body of the storm, extends from 2 or 3 kilometers altitude to near the tropopause, and as a horizontal scale of 3 to 6 kilometers. The second region is called the low altitude outflow region and consists of altitudes between the ground and 3 kilometers. It has a horizontal scale of 6 to 30 kilometers and contains horizontal velocities between 5 and 40 meters/second. The third region, called the external region, surrounds the main body of the storm and

has a horizontal extent of 3 to 10 kilometers. The main body of the storm makes up the visible portion of the storm, consisting mostly of clouds, and is generally considered to be opaque to the laser measurement except at the surface. The other two regions typically have low attenuation for laser radiation, and represent regions in which the laser system provides a useful measurement technique. A horizontal segment of a severe storm may be adequately covered by including an area of 10 to 20 kilometers on each side. A velocity resolution of one meter/second should be accurate enough for most severe storm measurements.

Wind measurements may generally be divided into three categories. First, there are those measurements which do not make any assumptions about the wind field, but give the vector information desired at a point in space instantaneously. The dual Doppler radar falls into this category. Secondly, there are measurements which assume a spatial uniformity such as the VAD (Velocity Azimuth Display) measurement. This measurement assumes that the velocity flow field does not change over a size scale large enough to infer multi-dimensional data using a single dimensional instrument measuring in different directions. Finally, there are measurements which assume a temporal uniformity, such as drift type measurements which attempt to measure the motion of characteristics of the storm. An aircraft is capable of moving from one location to another with sufficient speed so that two or more measurements at a single point may be made before the characteristics of the storm change appreciably. Specifically, it is possible to look at an angle forward of the plane normal to the flight path and make a one dimensional velocity measurement, and then to look at an angle back from the normal plane and make another measurement at the same point. These two measurements may be combined to produce a two dimensional vector velocity, provided that the velocity flow field does not change appreciably during the time between the two measurements, and provided that the measured points can be properly located in space.

The most important measurement to be made by the laser system is that of the two dimensional velocity flow field in a horizontal plane. These measurements may be displayed directly as a map of the two dimensional flow field, or they may be used to generate information concerning convergence, vorticity, and turbulence. The spatial resolution required in the low altitude outflow region is typically 100 to 300 meters, while that in the external region is 300 to 600 meters. A smaller spatial resolution element may be required for more sophisticated applications, such as discriminating between shear and turbulence or for making measurements of convergence and vorticity. Flexibility in the scan configuration and data processing algorithms is required to make maximum use of a laser system's angular resolution capability when these measurements are to be made.

In order to properly obtain the vector velocity flow field, it is necessary to have accurate information concerning the position and orientation of the aircraft as well as the storm's approach velocity. The latter is important, since it permits measurements over a time scale in which the storm translates in space but does not appreciably change its characteristics. Typical approach velocities for a storm range between 15 and 60 kilometers per hour. In measuring this velocity using a weather radar, it is important to recognize that the weather radar echoes generally consist only of returns from heavily precipitous regions.

In summary, the characteristics of severe storms which affect the specification of the pulsed LDVS have been determined. The storm lifetimes may be as short as 30 minutes with changes occuring within the storm over periods of 2 to 5 minutes. The coverage region should be a square having sides of 10 to 20 kilometers in length with a velocity resolution of approximately one meter per second and spatial resolution in the range from 100 to 300 meters, with better resolution required for specific tasks. Registration of the data points to

obtain the vector velocity flow field requires a knowledge of the location and orientation of the aircraft as well as of the storm velocity.

obtain the vector velocity flow field requires a knowledge of the location and orientation of the aircraft as well as of the storm velocity.

SECTION 3

PULSED LDV SYSTEM REQUIREMENTS

The storm characteristics described in Section 2 provide the spatial, temporal and velocity coverage and resolution requirements for the Pulsed LDV System for Severe Storm Measurements. These requirements and constraints introduced by aircraft parameters result in a set of requirements for the LDV system components. The scanner must be designed to accommodate the spatial coverage requirements of the storm, using the motion of the aircraft to cover the required area. The processor requirements are primarily determined by the velocity coverage and resolution in addition to the parameters of the laser transmitter. The laser transmitter pulse length is determined by the range and velocity resolution, and the repetition rate is determined in part by the desired spacing of the samples; that is, the spatial resolution requirements. Laser energy is determined by the required range coverage. The time required for scanning and the aircraft speed determine the size of the data processing problem, and the required resolutions determine the meteorological and aircraft data required to obtain sufficiently accurate registration of the data points. In addition, the data processing methods are determined in part by the amount of output desired in real time and the amount which may be postponed for later analysis.

The scan concept is determined by the required angular coverage as viewed from the aircraft. The most important coverage region in the present case is a horizontal plane. Since it is necessary to measure the vector velocity, the scanner is required to make at least two independent observations at each point of interest, with a sufficient angle between them so that the velocity components may be adequately resolved, and during a sufficiently short time, so that no change in the vector velocity at the point in question occurs. It is also desirable to considered the possibility of a scanner which

looks at many different planes, providing a three dimensional map of the storm. The spatial resolution required along a line parallel to the flight path in connection with the available range of aircraft speeds is an important consideration in the scanner design. This spatial resolution will have an impact on both the scan pattern used and the angular resolution required of the scanner. The requirement for 100 to 300 meter spatial resolution translates to a requirement for a scan pattern which repeats itself with a period between .5 seconds and 1.5 seconds for an aircraft moving at 200 meters/ second. A potential scan pattern is shown in Figure 3-1 where the scanner looks forward of the normal to the flight path for a short period of time and then changes to a line-of-sight looking to the rear of this plane for an equal length of time. The significant parameters of this scan are the dwell time on either line-of-sight and the scan time required to move from one to the other. The resulting pattern in space will be a grid in which the crossing points represent regions where vector velocity measurements may be obtained.

In addition to the coverage and velocity measurement requirements, the aircraft constraints also impose limitations on the scanner design. It is desirable to have as much of the scanner as possible inside the aircraft. Also, it is desirable to have as small a window as possible for the beam to be transmitted through. The scanner design should result in a clean configuration of the aircraft with no unusual shapes or large holes on the exterior of the aircraft. In addition, the scanner design should result in as small a physical size and weight as possible. The flight stability of the aircraft must also be considered in the scanner design, since it may be necessary to stabilize the scanner in directions in which the flight stability is limited.

In order to combine two looks at a point in space to produce the vector velocity, it is necessary to have data on the aircraft

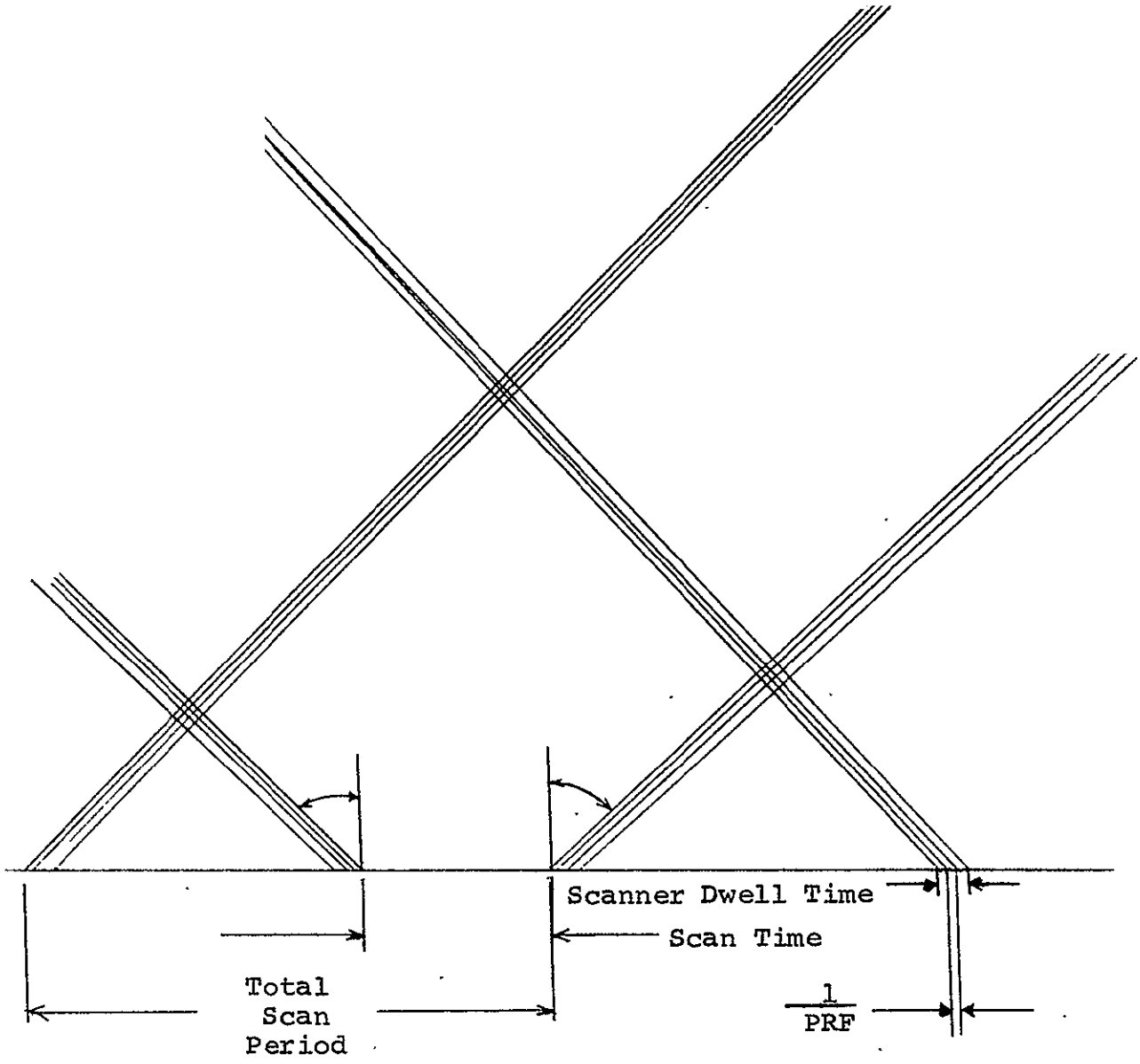

Figure 3-1. Scan Concept.

position and orientation, and on the storm in order to determine the location at which the two lines-of-sight intersect. The accuracy to which this may be accomplished depends on aircraft heading errors, aircraft position and velocity errors, the errors in tracking the storm location, and the velocity changes within the storm itself. It has been assumed that velocity changes within the storm occur over a longer time than the time between observations and this source of error will be neglected. The aircraft heading errors are summarized in Table 3-1, where the first column shows the flight stability in smooth air with the INS (Inertial Navigation System) carefully tuned for the specific flight conditions.[2] The second column shows the resolution of the INS readouts of roll, pitch and yaw.[3] The accuracy of these measurements is shown in the third column.[3] Finally, some data collected during the clear air turbulence flight tests is shown in the forth column. These numbers are the standard deviations of the roll, pitch and yaw during a portion of a flight in which it was noted that there was some turbulence. The spatial errors introduced in the registration of data points for the angular accuracies shown in the first column are also included in this table. It may be seen that the most significant angular parameter is roll. This is to be expected since this is the most difficult angle of the aircraft to control. It is also of greater significance because misalignments in this direction result in the lines-of-sight which do not intersect, and thus represent errors which cannot be accounted for in the data analysis. The same is true of pitch, but the accuracy to which pitch may be maintained is much better, and the effect of pitch is reduced by the geometry of the scan. Thus, it appears that of the three angular parameters, only roll need be corrected for in the scanner, and the accuracy to which all the angular parameters may be measured is sufficient to maintain the registration of data points to the desired accuracy. The position of the aircraft as determined by the inertial navigation system has a drift of between 0.5 and 1.0 nautical miles per hour. Provided that the measurements on a given

TABLE 3-1

CV 990 Roll, Pitch and Yaw

	FLIGHT STABILITY (SMOOTH AIR)	RESOLUTION	ACCURACY	STD DEV CAT 13 DATA
ROLL	42'	2'	12' TO 30'	1°
PITCH	6'	2'	12' TO 30'	19'
YAW	12'	2'	12' TO 30'	24'

REGISTRATION ERRORS AT 10 KM RANGE	ROLL PITCH YAW	122 METERS VERTICAL 12 METERS VERTICAL 35 METERS HORIZONTAL

point are made within 100 seconds, this results in an error of no more than 50 meters in position. The accuracy to which the storm velocity vector may be measured presents a more difficult problem. It is obvious that the laser system will not be adequate to determine the overall storm motion at the time of measurement and therefore, the use of a weather radar should be considered. It has been assumed that air velocity within the storm consists of two components; first, a translational component common to all regions of the storm which thus represents the overall motion of the entire storm, and secondly, internal motions which are the velocities to be measured. It may be assumed that although the storm translates through space over a significant distance during the measurement time of one to two minutes, the internal velocities do not change significantly over this time. Looking at a radar echo from the storm, a longitudinal and transverse dimension may be defined as shown in Figure 3-2, with the longitudinal dimension being that in the direction of translation. The echo as defined here may be any feature of the storm which remains fairly distinct for a long period of time. After a time, it is expected that the echo will have moved, but essentially preserved its shape. It should, therefore, be possible to determine the vector velocity of the storm to an accuracy of a fraction of the longitudinal storm dimension divided by the elapsed time. If features of the storm in the neighborhood of 5 to 10 kilometers in size can be observed, it is therefore, possible to measure the storm velocity to an accuracy of approximately 10 kilometers per hour in one half to one hour. This accuracy would result in a 300 meter error in the worst case of a time between observations of 100 seconds. Thus, it can concluded that the registration problem can be solved to the required accuracy by using the INS data for aircraft position and orientation, and weather radar, either on-board the aircraft or from a ground based station, to determine the storm velocity vector.

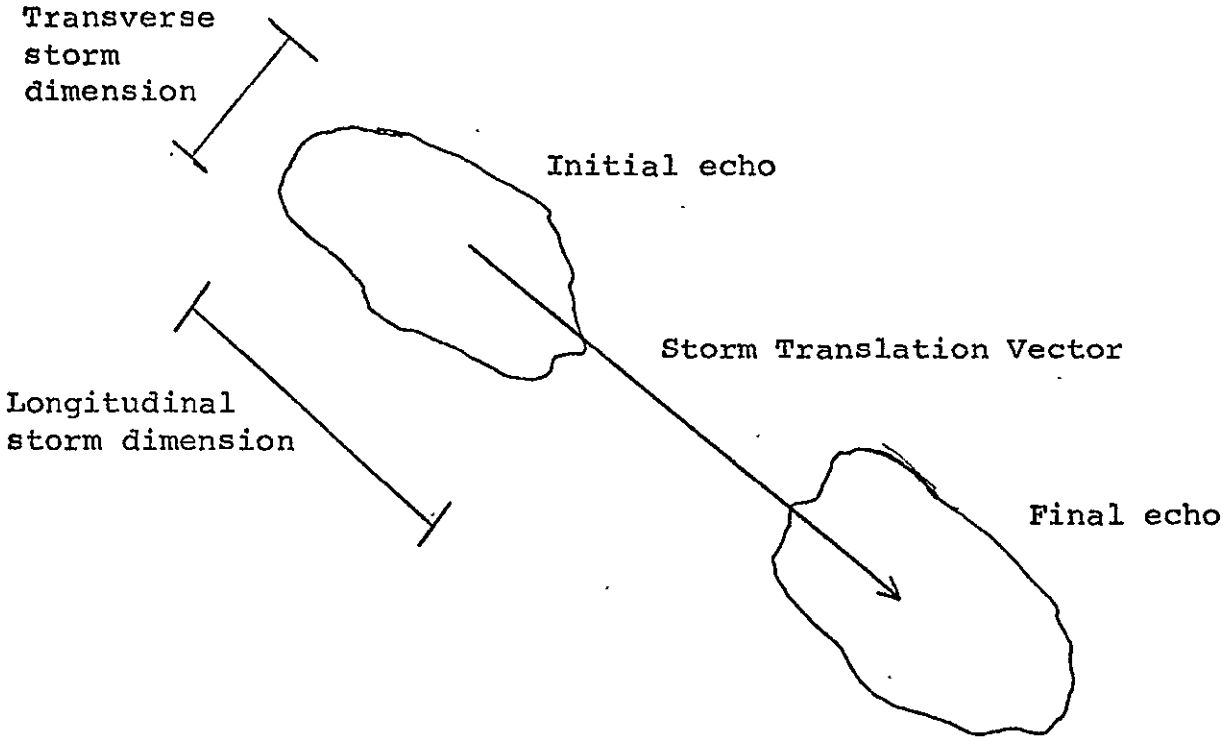

Figure 3-2. Determining Storm Translation From Radar Returns.

The processor is required to take the raw signal from the laser system and produce useful line-of-sight velocity outputs to be used in the data analysis. The processor first converts the incoming signal to a useful frequency band and accounts for Doppler shifts introduced by the aircraft motion. The next component of the processor is a spectrum analyzer and integrator which performs the Fourier analysis of the signal and integrates the result for a specified length of time. Finally, a moment calculator determines the first three moments, m_0, m_1, and m_2 as defined by the following equations:

$$m_o = \sum_{n=1}^{N} I_n$$

$$m_1 = \sum_{n=1}^{N} n\, I_n$$

$$m_2 = \sum_{n=1}^{N} n^2 \cdot I_n$$

where I_n is the amplitude of the nth frequency cell and N is the total number of cells. A recorder output should be provided to record the spectral data, and real time displays should include the spectrum at a specified range and an RVI type of display. Additionally, displays of the moment data might be desirable and the moments should be output to either a computer or recorder.

The parameters of the processor are primarily determined by the velocity resolution and coverage requirements, and the pulse length and pulse repetition frequency of the laser as well as the desired integration time and outputs desired. The velocity coverage should be ± 40 meters/second with a resolution of 1 meter/second as the standard deviation of the first moment. The integration of pulses

should be variable from no integration at all to integration over as much as 0.5 seconds and should be variable either both by a selected switch and by remote control from the scanner or computer so that it is possible to integrate all of those pulses which occur while the scanner is in one position or the other. Digital outputs are required for the spectral data output and the results of the moment calculations. The processor is required to interface to the scanner and flight data, to provide for the appropriate offset frequency and to provide this data for the displays and recorders. In addition, it is required to interface to a recorder for the spectral output and either a recorder or a computer for the moment output. Additional interfaces are required for the trigger to start the spectrum analyzer at each laser pulse and for the integration control to start and stop integration. This latter interface may be either directly from the scanner or may be controlled by the computer. Figure 3-3 shows a conceptual block diagram of a processor incorporating these features.

The laser parameters set by the measurement requirements are the energy, pulse width, repetition rate, and frequency stability. The laser energy per pulse is determined by the range coverage requirement and the signal-to-noise ratio required, in connection with other parameters of the system and the atmosphere. In general, for the present purpose, it is desired to have a range capability of 10 kilometers with a signal-to-noise ratio of 10 dB in moderately adverse weather conditions. The maximum range capability of systems having different pulse energy in a variety of atmospheric attenuation situations is shown in Figure 3-4. It may be seen that in very clear weather, the present CAT transmitter, producing approximately 25 mJ, is adequate to produce the desired range. An increase of a factor of 10 would result in a significant improvement in the range capability of the system in conditions of 2 to 3 dB per kilometer attenuation. These conditions can be expected frequently in the

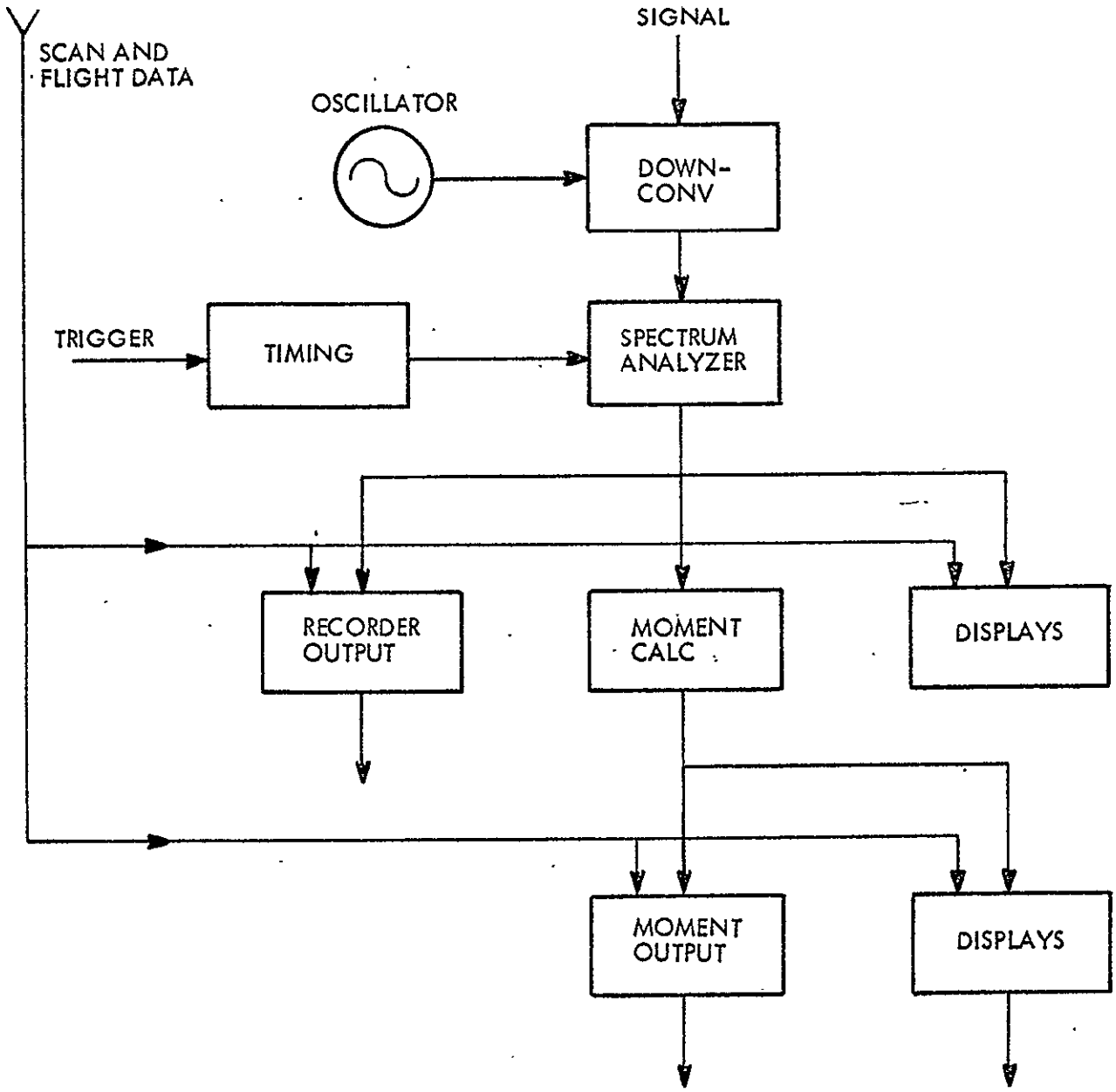

Figure 3-3. Processor Concepts.

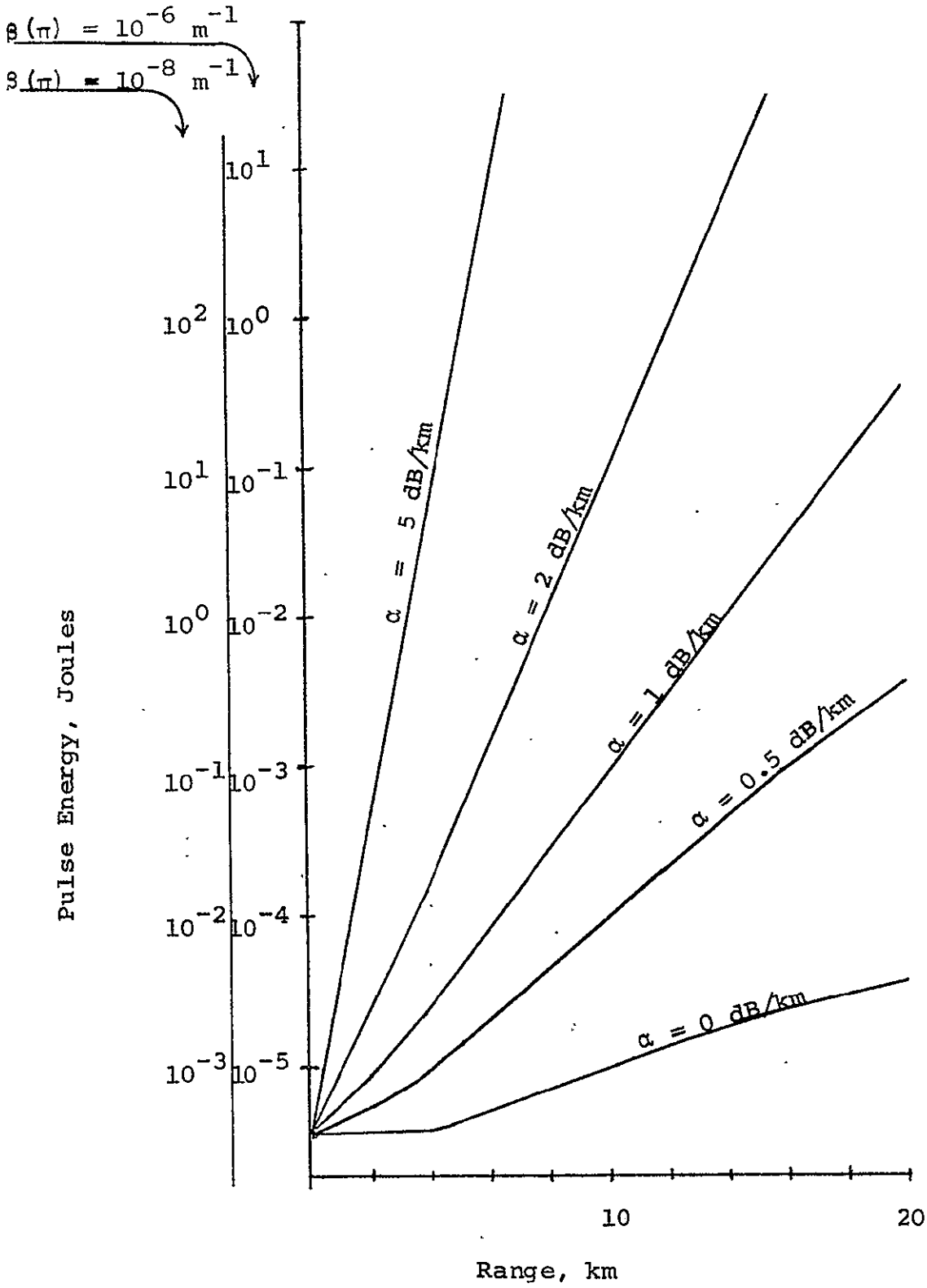

Figure 3-4. Effect of Atmospheric Attenuation.

neighborhood of a severe storm and thus, would severely limit the usefulness of the present transmitter. The laser pulse width is determined by the desired range and velocity resolution. A one microsecond pulse results in a range resolution of 150 meters and a 2 microsecond pulse results in a range resolution of 300 meters. Both of these pulse widths are within range of the required systems spatial resolution. It should be noted that there is a tradeoff between range resolution and velocity resolution with a one microsecond pulse being capable of one megahertz or 5.4 meters/second in velocity resolution where a 2 microsecond pulse is capable of half that resolution. It should be noted that with a signal-to-noise ratio of 10 dB or more, it is possible to achieve an improvement on these numbers when the important accuracy is that of the first moment of the spectrum. Thus, it is recommended that a pulse length of approximately 2 microseconds be used which will produce a velocity resolution of 2.7 meters/second and for sufficient signal-to-noise ratio will meet the requirement of one meter/second accuracy on the velocity measurement.

Two factors are involved in the repetition rate or PRF. The spatial resolution along the line parallel to the flight path is determined by the aircraft's speed and the PRF. However, if a coarser resolution is required, the resolution may be determined by the scan rate and scanner dwell time, and the repetition rate of the laser above a few hertz may be used to provide pulse to pulse integration resulting in a signal-to-noise ratio enhancement. For example, with an aircraft flight speed of 200 meters/second, a PRF of 2 Hz results in a spatial resolution of 100 meters. A PRF of 20 Hz which may be achieved with a TEA laser results in a resolution of 10 meters which is more accurate than required for most purposes. In this case, the spatial resolution would be determined by the scanner parameters and the additional pulses available would be used for signal-to-noise ratio enhancement. For example, if the scanner dwell time on a particular line-of-sight is 0.5 seconds and the PRF is 20 Hz, the

spectral data from 10 pulses may be integrated to produce a signal-to-noise ratio enhancement of approximately a factor of three. Thus, to fulfill the spatial resolution requirements, a PRF of only a few hertz is necessary. Since PRF and pulse energy are related in a complicated fashion for most laser transmitters, the selection of a higher PRF should be based on the energy vs. PRF tradeoff for the specific laser transmitter used in such a way as to maximize the average power over a one-half second measurement. The frequency stability of the laser should be sufficiently good that the frequency changes less than the velocity resolution requirement of one meter/second or 200 kHz in the transit time of light over the 10 kilometer path (approximately 66 microseconds). Additionally, the laser should be required to remain on a single transition for a period of time long compared to the round-trip transit time.

The purpose of the data analysis system is to collect the data from the signal processor, the scanner, and the aircraft INS, as well as the required meteorological data, to process this data to produce the required two dimensional velocity flow field or other required information, and to display the resulting data in a meaningful form. It is, of course, desirable to perform these tasks in real time as completely as is possible. However, it should be recognized that a post analysis data capability is essential for system performance evaluation and for producing more detailed analyses and displays than would be possible in real time. The important factors to be considered in the data analysis system are, the data rate of the incoming data, the storage requirements for processing the data, the recording requirements, the desired displays, the time required for performing the data processing algorithm, and the time available for processing. It should be recognized that the data rate is tied to the PRF of the laser transmitter and the number of range bins per pulse. For example, at a 20 Hz PRF with 64 range bins, corresponding to a range resolution of 150 meters, the basic data rate is 1280 Hz. If all three moments are to be recorded, this corresponds

to a data rate of 3840 Hz. The amount of data which should be stored in order to do the processing algorithm is determined by the geometry of the scan and the aircraft flight speed. That is, after a forward looking scan has been completed, its data must be saved until the data has been collected for the backward looking scan which crosses that scan at maximum range. The data processing program should perform a number of different functions. It should have the capability to solve the registration problem by locating the crossings of the lines-of-sight, and associating with them the velocity components from the correct range bins. It should then resolve these velocity bin on each line-of-sight. It should then resolve these velocity components into those of the desired coordinate system and associate them with the appropriate x and y coordinates in the storm. This data should be displayed in a reasonable fashion so that the overall flow field of the storm may be visualized by observing the display. The potential outputs which could be useful from this system include printouts of the velocity components in a region of space, the flow field lines, contour maps of velocity magnitude, components, direction, and a variety of two and three dimensional plots. The more complicated plots would, of necessity, be accomplished in post analysis. For real time data analysis, the large amount of data available could most easily be assimilated through the use of a real time, color - intensity display. The optimal division of real time and post analysis data processing would be to perform the registration algorithm and determine the flow field in real time with the best available meteorological data, displaying the results on a color intensity display. The moments which are input to the computer should be recorded on digital tape for a later post analysis. The post analysis phase should be an interactive session using a wide variety of processing and display capabilities and should allow for the option of using improved meteorological data which might be available from either a ground based radar or satellite observations. In summary,

the available knowledge of severe storms has provided a set of requirements for the pulsed LDV system; specifically, for the scanner, the required aircraft and meteorological data, the signal processor, the laser transmitter, and the data analysis system. In the following section, these components and the requirements which have been determined for them will be evaluated in more detail to provide a preliminary design for a pulsed LDV system for measuring severe storm flow fields.

SECTION 4

TWO DIMENSIONAL PULSED LDV FOR SEVERE STORM MEASUREMENTS

4.1 INTRODUCTION

The available knowledge of severe storms has been reviewed, and from this, requirements for the Severe Storm Measurement System have been determined. In this section, the design of a severe storm measurement pulsed LDV will be considered starting with the existing CAT system as described in Reference (4). The measurement capability of the upgraded system will be shown to meet the severe storm measurement system requirements outlined in the previous section. The data which could be obtained from the present system, viewing a thunderstorm cell, will be considered to demonstrate the capabilities and limitations of the system. It will then be shown that the principle problems with that system for this application are the lack of an adequate scanning capability, the limitations of the present processor and its low pulse energy. Thus, in Section 4.3, the two dimensional scanner is discussed and in Section 4.4 consideration is given to a digital processor providing the necessary outputs for the data analysis system. With the addition of these components to the existing CAT system a severe storm measurement program would be feasible, provided that the atmospheric attenuation was not a limiting factor. Section 4.5 describes the data processing system, including concepts for the algorithms necessary to obtain this data. Finally, Section 4.6 discussed the TEA laser transmitter, which will permit measurement at a range of 10 kilometers in moderately adverse weather. It is shown that the resulting system would be capable of measuring the two dimensional velocity flow field with the required resolutions and coverages, and that a large portion of the data processing could be accomplished in real time. Additionally, it will

be shown that the capability exists for more sophisticated processing in post analysis, to make limited measurements on a smaller scale of the one dimensional velocity flow in a small region, and to produce different displays of the data.

4.2 PRESENT CAT SYSTEM

The CAT system as it presently exists, would not be suitable for performing the two dimensional velocity measurements of severe storms. A limited amount of one or two dimensional data could be obtained, but the point density of the velocity data would not be sufficient to meet the requirements outlined in Section 3. Also, the complicated flight path required would make the data collection procedure extremely difficult and unreliable.

The present CAT system produces a pulse energy of approximately 25 mJ, which is adequate for ranges beyond 10 kilometers only if the atmospheric attenuation is significantly below 1 dB per kilometer. The system is designed to look along the line parallel to the flight path forward of the aircraft and no scanning capability is included. Thus, any scanning of a storm can only be accomplished by controlling the flight path of the aircraft. Furthermore, the signal processor is very limited in the availability of digital outputs. The available digital output consists only of the spectral data from a single range bin. To use this data for the severe storm application, all range bins for each pulse must be available. While this type of data is on the RVI display, the only available record is photographic. A limited amount of one dimensional storm velocity data could be obtained by flying in the general direction of a storm, varying the aircraft heading

in a uniform manner, and recording the digital data while changing the selected range bin manually. In post analysis, it would be possible to determine when the range bin was set properly to measure the storm velocity, and a plot of the one dimensional velocity profile could be obtained. The resolution of this data would be limited by the rate at which the range bin could be changed and would definitely fall short of the requirements outlined in Section 3. It should be recognized that if the aircraft may be flown to within 10 kilometers of the storm, the data would actually be collected at ranges greater than 10 kilometers allowing sufficient for the aircraft to turn and avoid the storm.

The possibility of collecting two dimensional velocity flow field data with the existing system has been considered. It would be necessary to fly a complicated flight path so that two looks at the storm could be obtained from different directions. Such a flight path is illustrated in Figure 4-1 using data from the experimenters handbook for the Convair 990[2]. For an aircraft speed of 400 knots, and a 30° bank angle, the time required for the two dimensional measurement is 3.8 minutes which is excessive for performing the registration of data points to obtain the two dimensional velocity. It is possible to improve on this by flying at a 45° bank angle resulting in an elapsed time of 2.2 minutes. It should be noted that this procedure requires an extremely difficult maneuver of a pair of 45° bank turns maintaining the same pitch angle and altitude at each measurement point. Furthermore, it requires measurements to be made at distances significantly beyond the minimum distance from the storm to which the aircraft is permitted to fly. To obtain the necessary area coverage, it would be necessary to rapidly vary the range of the range bin in which the digital data is recorded, producing a number of points at which registration of the data points could be accomplished. Again, the spatial resolution would fall far short of the desired goal. It may, therefore, be concluded that the two dimensional severe storm measurement with the existing CAT system is impractical

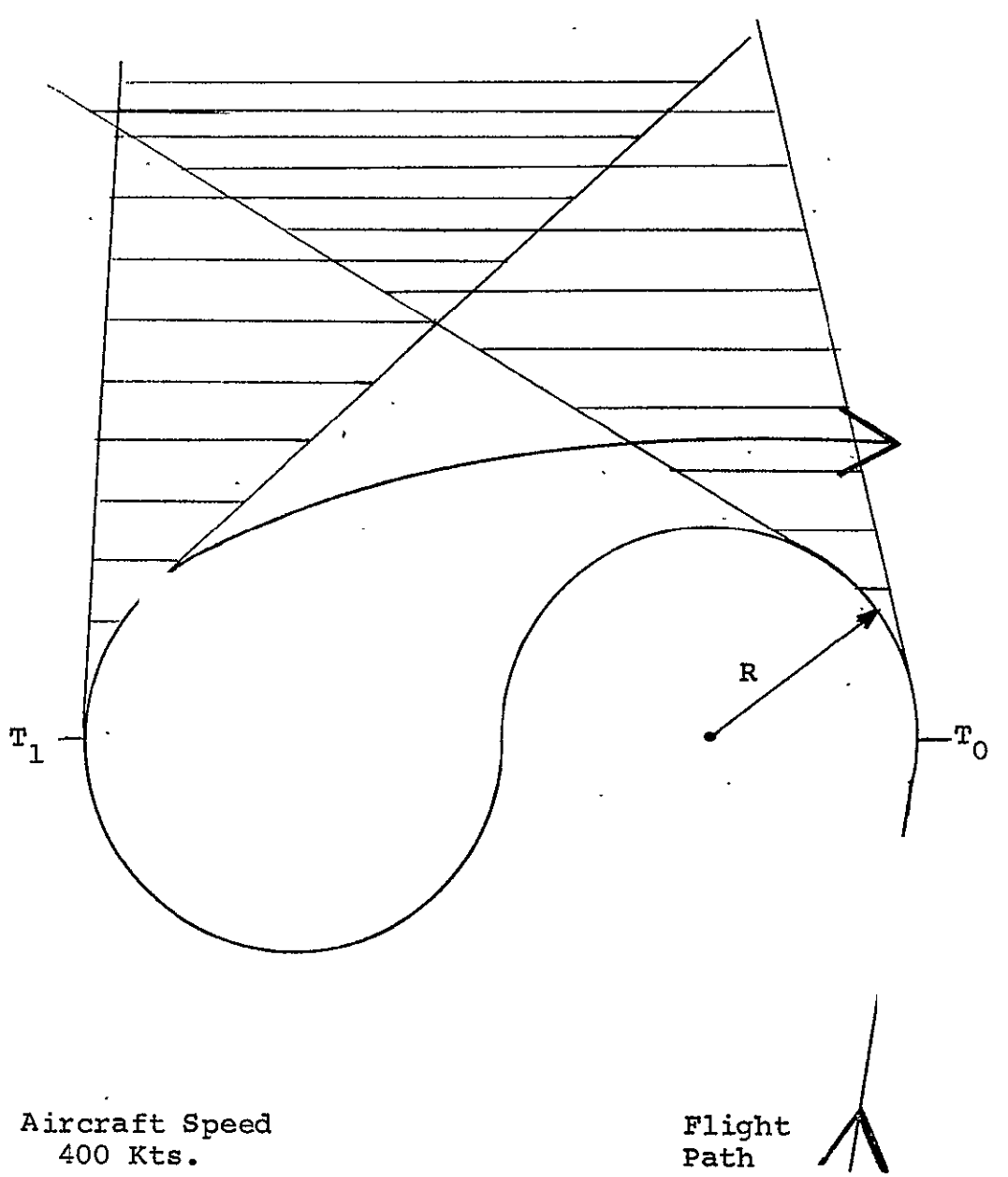

30° Bank Angle	R = 7.4 km	T_1 = 3.8 Min.
45° Bank Angle	R = 5.0 km	T_1 = 2.2 Min.

Figure 4-1. Aircraft Flight Data for 2-D Measurement with CAT System.

since it requires a very difficult maneuver of the aircraft, a very low value of the atmospheric attenuation coefficient, and still produces data at a resolution worse than that required.

In conclusion, the present CAT system could only be practically used to produce a one dimensional velocity profile of a storm, with very poor spatial resolution, in favorable weather conditions. To improve the system sufficiently to make it useful for the severe storm measurement, a two dimensional scanner, an improved digital processor, and a laser transmitter having greater pulse energy are required.

4.3 TWO DIMENSIONAL SCANNER

In order to obtain two dimensional velocity information about the flow field at points on a horizontal plane in the vicinity of a storm, one must obtain pulse Doppler data at each resolution element in the plane and assume spatial or temporal homogeneity. This can be accomplished in two different ways; first, if the flow field has large scale spatial homogeneity, one can process data from two, near-by regions which are separated far enough to provide adequate velocity resolution. Since severe storms do not have homogeneous flow fields over large regions, a second technique must be used which assumes a temporal stationarity over some period of time, say 3-5 min., so that the observation point can move so as to get two or more "looks" at each resolution cell from significantly different angles. In this case, the moving observation point is generated by the aircraft forward motion and the two "looks" obtained by scanning the laser system line-of-sight in a horizontal plane.

4.3.1 DESIGN GOALS

The scanner design must be able to position the laser beam within one resolution cell at the maximum range of 20 km. If a resolution of 200 meters is required, the absolute positionability must be better than $\pm 0.6^{\circ}$.

The angle between "looks" must be large enough to provide

unambiguous velocity measurements so that the horizontal flow field can be mapped. Calculations show that 30° is the minimum angle required to obtain adequate velocity resolution, and 90° is the maximum practical angle; thus, the scanner should provide at least two "looks" at each resolution cell with a 30° to 90° angle between observation points.

The scan time and the aircraft speed determine the grid spacing, or resolution. For an aircraft speed of 250 m/sec (500 knots), a 200 meter transverse resolution can be obtained with a 0.4 second complete scan time (forward and back).

Large scale diagrams of a typical scan grid for 60° and 90° "look" angles are shown in Figure 4-2 and 4-3 for typical aircraft speeds, laser pulse repetition frequencies, and scan times. Figure 4-4 shows an expansion of a grid intersection area; the fine mesh consists of 11 pulses, at a 25 Hz PRF, which can be integrated to obtain higher signal-to-noise ratios.

Since the 2-D system is to use as much existing equipment as possible and prove out the basic concepts, the scanner design should not require extensive aircraft modifications or be required to operate in a difficult environment, such as outside of the aircraft. In any case, the scanner must be able to operate reliably in a typical aircraft cabin environment.

4.3.2 SCANNER DESIGN

The 2-D scanner preliminary design system completed assuming that the entire laser system should be accessible for adjustment or repair while the aircraft is in flight. This means that the only practical location of the system and scanner is inside the main cabin area. The second main assumption is that the 2-D system should not require major aircraft modifications. This means that the laser beam must exit through one of the standard passenger windows (adapted for a germanium window) or through an emergency exit door (modified to take an optical window) as was done in the CAT flight tests.

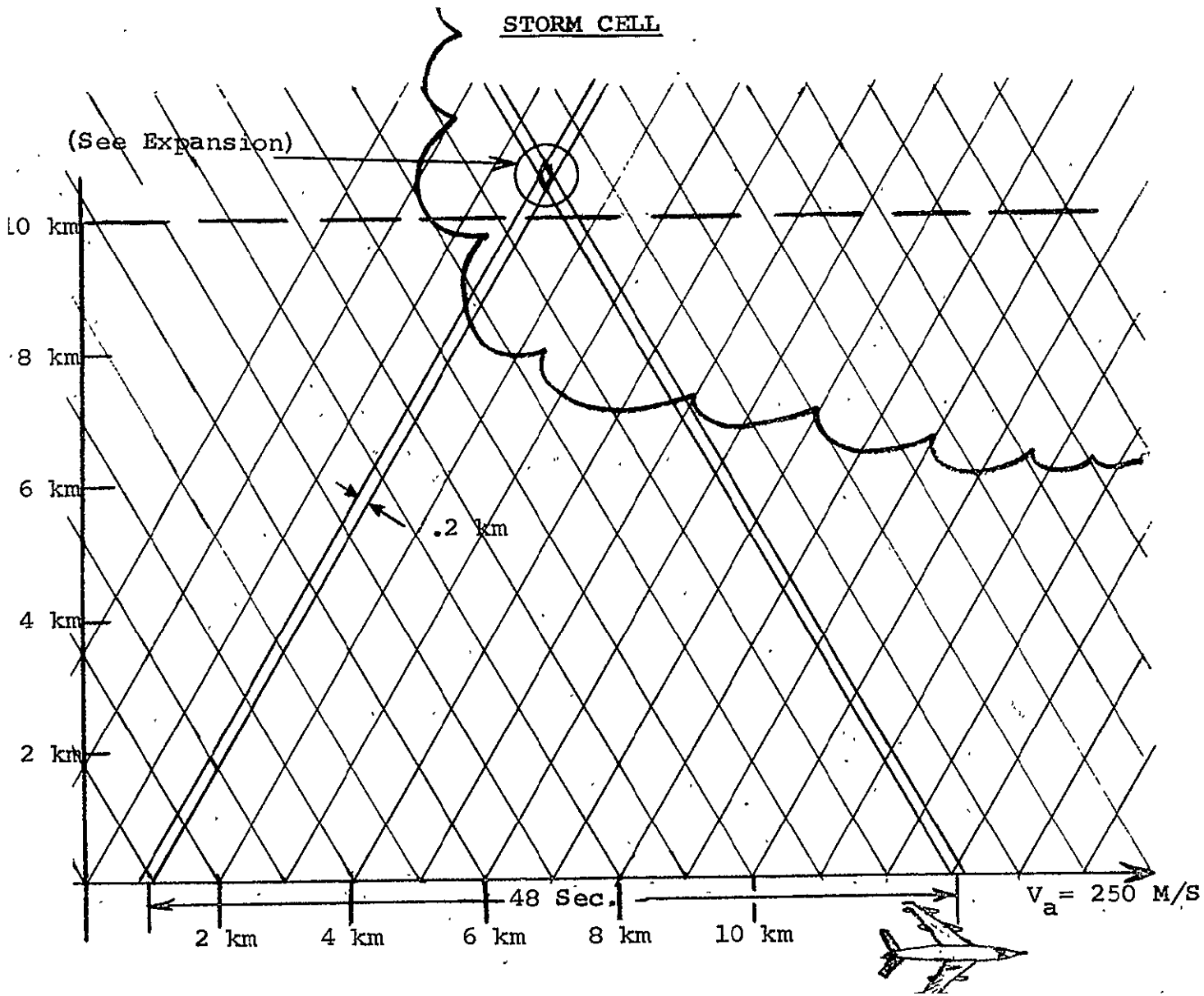

Figure 4-2. 60° Grid Pattern.

RAYTHEON COMPANY
EQUIPMENT DIVISION
RAYTHEON

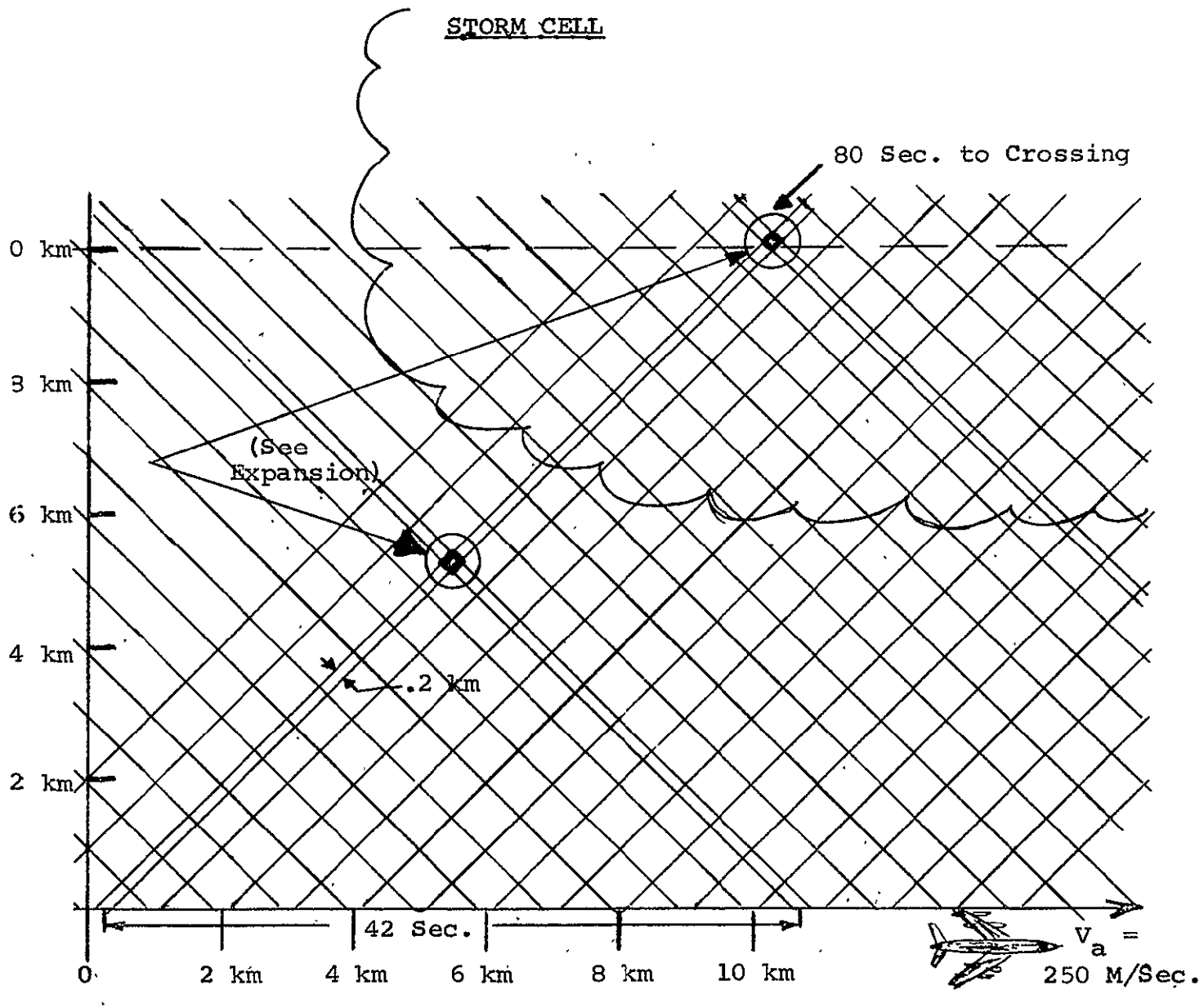

Figure 4-3. 90° Grid Pattern.

RAYTHEON COMPANY
EQUIPMENT DIVISION
RAYTHEON

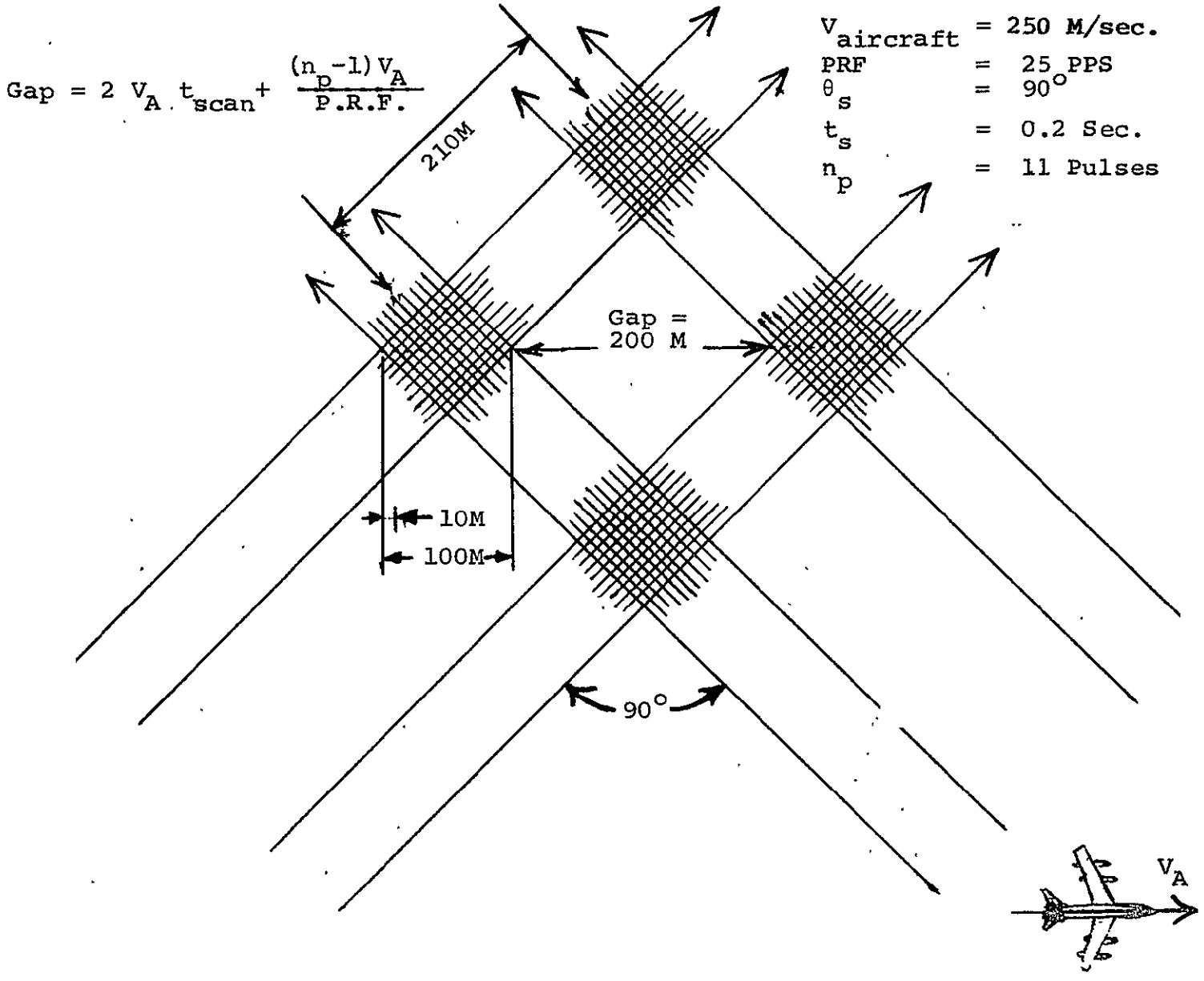

Figure 4-4. Typical Grid Pattern (Expanded).

RAYTHEON COMPANY
EQUIPMENT DIVISION
RAYTHEON

The passenger windows have a clear aperture 10 inches wide by 14 inches high. This means that if a nominal 60° "look" angle is chosen, the maximum beam aperture is 9.6 inches. If a 12 inch clear aperture is desired, the window must have a 14 inch width, which means that an emergency exit door would have to be modified to provide this large window.

In any case, the output beam must be able to pass through the window at two different angles such that the included angle lies between 30° and 90°. For this discussion, 60° has been assumed since it provides good velocity resolution and still does not greatly increase the window size. In order to keep the window width to a minimum, the scanner must position the beam by a rotation about the window surface. This can be accomplished by several techniques; e.g., the telescope can be pivoted about its output beam with the pivot located at the window, as shown in Figure 4-5. This technique is cumbersome and does not lend itself to the high accelerations necessary to meet the 0.4 second scan times. Since only two (or possibly three) "looks" need be obtained, the scanner does not have to provide a continuous angle scan; thus, another possible scan technique is to use a mirror arrangement which provides two different "look" angles and can switch quickly between them. Such a configuration is shown in Figure 4-6. Since each beam is individually positioned, a minimum window size results. A further advantage of this scan technique is that only a single mirror need move, thus, high accelerations are possible.

When defining the actual scanner geometry, the goal should be to minimize the total scan mirror motion in order to decrease the scan time; in addition, the overall size of the system should be minimized.

As a first cut, the design shown in Figure 4-6 can be analyzed to determine if the required angular velocities and accelerations are practical.

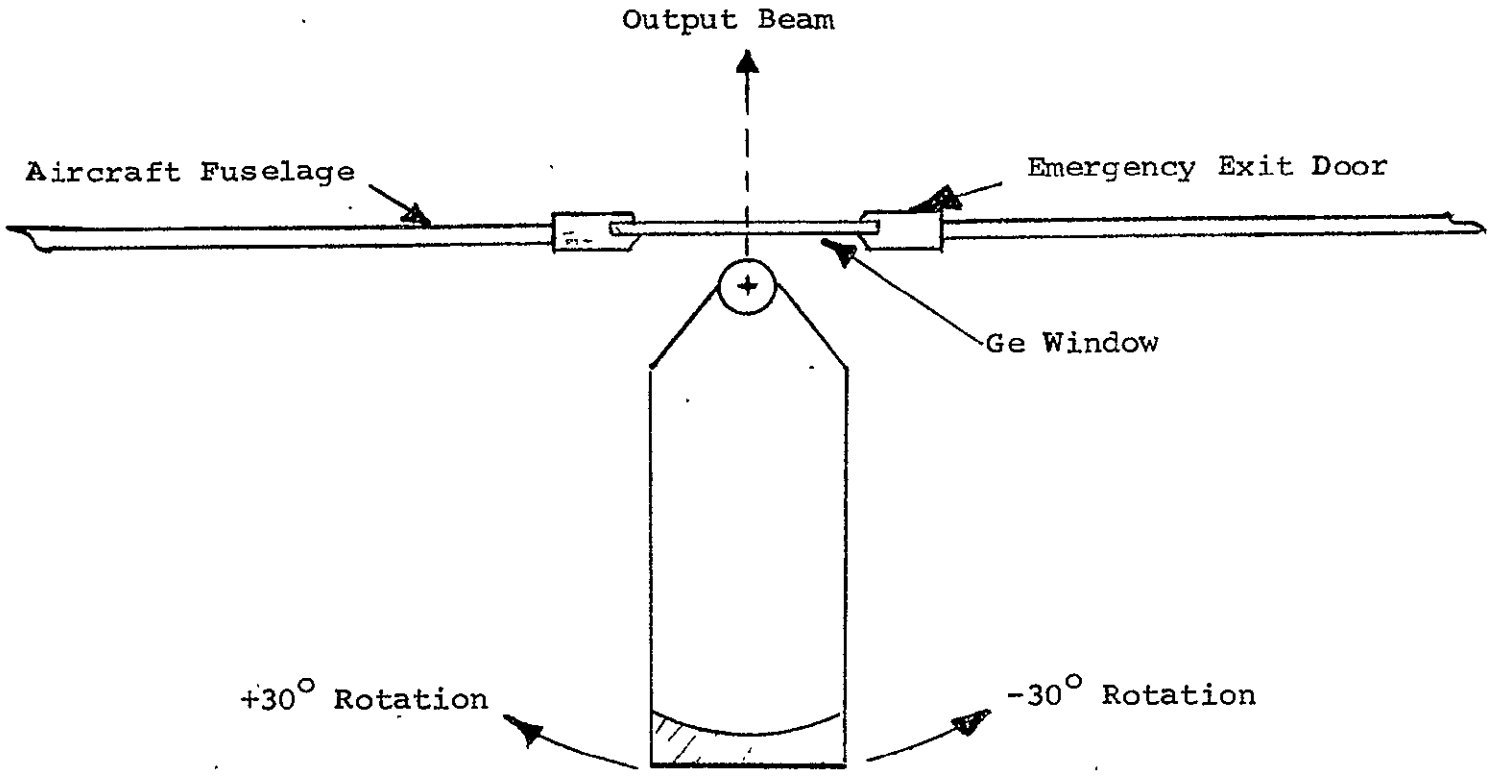

Figure 4-5. Rotating Telescope Scanner.

RAYTHEON COMPANY
EQUIPMENT DIVISION
RAYTHEON

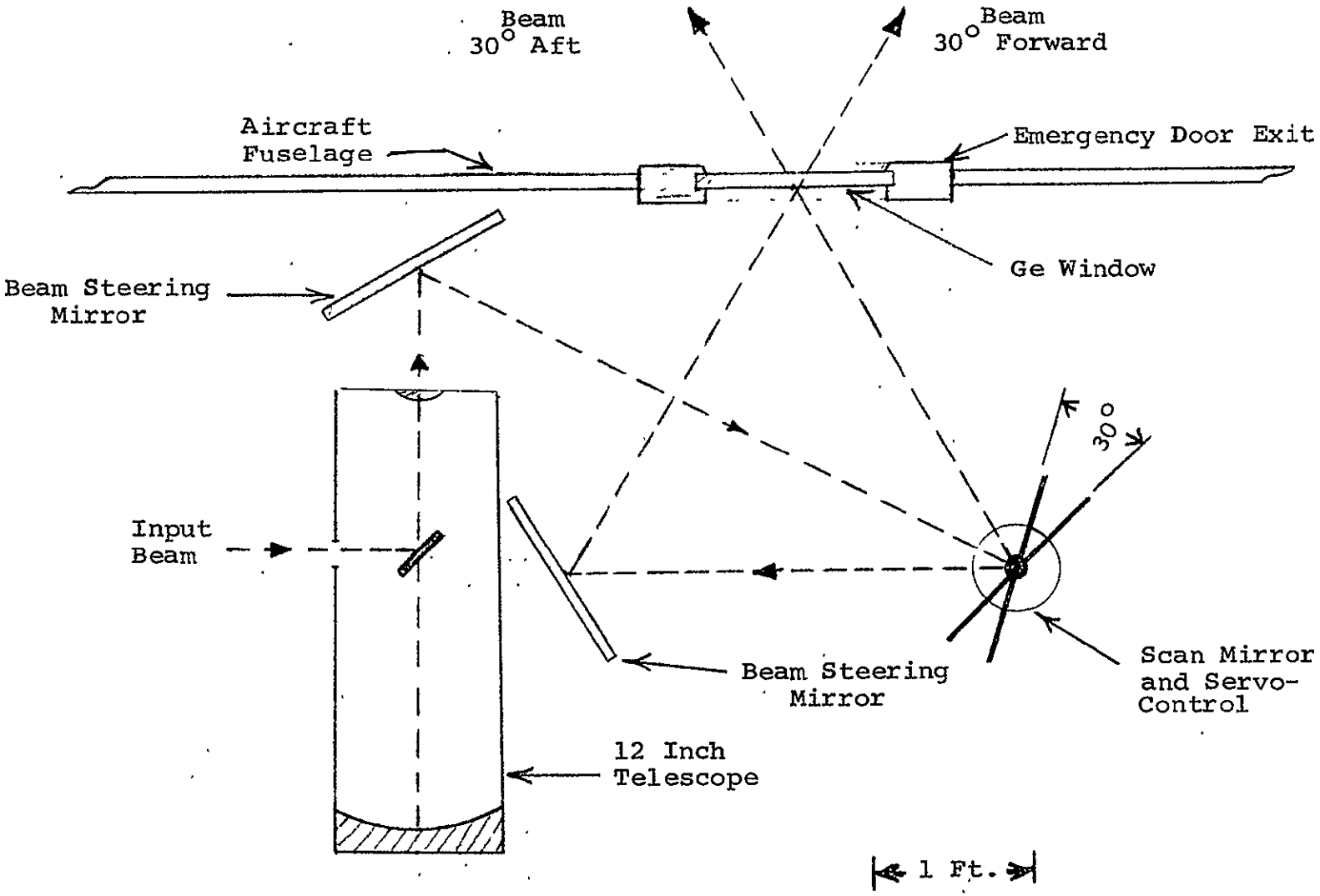

Figure 4-6. 2-D Scanner Design Concept.

The scan mirror must move about 30° to provide two "looks" at a 60° angle. The scan mirror should be about 14 inches in diameter and be made with a magnesium honey comb structure to keep the mass down. The surface of the mirror is nickel plated with an electrolytic gold plating which provides a reflectivity of 98% at 10.6μ. Such a mirror will have a moment of inertia of about .05 ft-lb-sec^2 so that the required torque is given by

$$\tau = \frac{4I\theta}{t_s^2}$$

when τ = Torque required

I = Moment of inertia of the mirror

θ = Scan motion

t_s = Scan time

If t = 0.2 seconds (beam moves 30° aft to 30° forward)

I = .05 ft-lb-sec^2

θ = 30°

then τ = 2.5 ft-lbs and the maximum acceleration is given by $\alpha_{max} = \frac{4\theta}{t_s^2}$ and is equal to 50 rad/sec^2. This torque requirement is easily met with standard motors, and the acceleration is reasonable with respect to mirror deflection.

One important requirement of the scanner is that when the scanner moves from one position to the other, the vibrations introduced must settle out quickly so that the scan efficiency is high. The vibrations must damp out to less than $\pm$ 0.3° amplitude with an instantaneous angular velocity of less than 12.5° per second in a time which is small compared to the scan time (in about 20 milliseconds). The mechanical design of the scanner must be such that the natural resonances are high, so that damping occurs quickly. Special damping material may be needed and the servo system should be "fine tuned" to reduce specific resonances.

The maximum angular velocity of the scanner occurs midway between scans and is given by:

$$\omega_{max} = \alpha_{max} \frac{t_s}{2}$$

For the previously given parameters, $\omega_{max} = 2.5$ rad/sec which is well within typical servo motor capabilities.

The absolute positioning capability of the scanner must be specified so that the required encoders can be included in the design. The design goal of better than $\pm 0.6^{\circ}$ can easily be met with standard components.

4.3.3 ENVIRONMENTAL CONSIDERATIONS

If the entire scanner is located in the main cabin area, temperature and humidity extremes, dust, rain and snow, etc. present no problems. The major environmental consideration is the stability of the optical alignment under the shock, vibrations, and "g" loading which occur while in flight and during take-offs and landings. The scanner and beam steering mirrors should be mounted on a rigid frame which is secured directly to the seat rails. The angular deflections between components must be kept to less than $\pm 0.3^{\circ}$ which should present no major problem. The high frequency aircraft vibrations are not important since their amplitudes are very small.

One important consideration involves the relatively large amount of roll likely to occur during turbulent conditions. The autopilot may not be able to hold the roll to within the registration tolerances so that a second scan axis might be needed to provide roll stabilization. The scan mirror would have to have a servo-driven, orthogonal scan axis which would take roll information from the INS and correct the beam elevation accordingly. This addition adds complexity and cost, but may be necessary for good registration and resolution.

4.3.4 AIRCRAFT INTERFACE

The major aircraft interface consideration involves the output window. As discussed in Section 4.3.2, either an 8 inch system can be used by replacing a passenger window with a piece of anti-reflection coated germanium, or the emergency exit door can be modified to accept a larger window to handle a 12 inch beam. This modification requires the installation of a gasketed window seal capable of holding a 16 inch wide by 18 inch high by about one inch thick germanium window. This is a large piece of germanium and near the maximum practical size limits, although one manufacturer said that with furnace modifications, it could be made. The grinding, polishing and figuring present no major problem and the anti-reflection coatings can be done using the electron beam technique to enhance durability. The effects of the pressure differential and thermal gradient through the window will cause some deflection, but this should not significantly affect the system performance. One other problem concerning the window is the possibility of condensation occuring either inside or outside. Some form of heating or dry nitrogen circulation may be necessary.

4.3.5 CONCLUSIONS

The preliminary design of a simple, 2-D scanner has been analyzed and the results show that the original goals set forth in Section 4.3 can be readily achieved with a low cost system requiring relatively little aircraft modification. The design will provide a two "look" grid pattern in a horizontal plane with a scan resolution of 200 meters at a range of 20 km. The "two observation" included angle is nominally 60° which reduces the window size requirements but allows adequate velocity and spatial resolution and an intersection time of 100 seconds at the longest range (20 km). Environmental problems are minimized by locating all components in the main cabin which also allows easy accessibility.

Roll stabilization may be necessary and can easily be provided using the outputs of the onboard INS.

Table 4-1 summarizes the scanner specifications.

TABLE 4-1

Severe Storms Measurements
2-D Scanner (Two Look)

Scan Mirror	
Size:	14 inches diameter
Material:	Magnesium Honeycomb
Figure:	$\lambda/10$ @ 10.6μ
Coating:	Nickel plating with electrolytic gold coating
Scanner	
Mirror Rotation (θ)	
Azimuth:	30°
Roll:	$\pm 1.5^\circ$ (Optional)
Max. Velocity ($\dot{\theta}$):	2.5 rad/sec
Max. Acceleration ($\ddot{\theta}$):	50 rad/sec^2
Position Error ($\Delta\theta$):	$\pm 0.3^\circ$
Scan Time:	0.2 seconds (beam goes 30° aft to 30° forward)
Settling Time:	20 msec to $\pm .3^\circ$ and 12.5°/sec

4.4 DIGITAL PROCESSOR

A flexible data processor is necessary to process the laser system data and provide velocity data for analysis. The processor should accept all PRF's and pulse widths associated with the present CAT and the TEA transmitters. Additionally, it should have the

capability of variable pulse integration from single-pulse to at least 0.5 second. The integration should be capable of being controlled both by a selector switch and by the computer. Spectrum outputs should be made available for recording and display and the moments of the spectra should be calculated for use in the real time computer. An interface should be provided for the moment data and aircraft data to be input to the computer and for the offset frequency and start/stop integration commands to be output from the computer. An initial approach to the design of such a processor is described below.

Pulsed-lasers used in Doppler velocimeter system are characterized by inter-pulse periods many times greater than the useful-range time-interval. The signal processor presented in block diagram form in Figure 4-7 makes use of this long inter-pulse period (at least 5 millisec.) to digitally process data acquired during the 128-microsecond useful-range interval. The processing performed includes spectrum analysis followed by optional pulse-to-pulse block-type integration of each equivalent Doppler filter output in each range cell. The integrator drives a display interface, providing Range-Velocity or Intensity-Velocity formats, a processor element which obtains the zeroth, first and second moment, as well as peak intensity for the spectrum of each range cell, and a digital tape recorder. Moments are combined with ancillary data and are formatted for use in a mini-computer.

The IF processing block in Figure 4-7 develops In-Phase and Quadrature base band signals from the 16-MHz bandwidth receiver output centered about a 10 MHz intermediate frequency. A Sensitivity-Time Control approximates compensation for intensity-range variation by a linear gain vs. range function with manual slope control.

During the 128 μsec interval following each pulse, the I and Q signals are each sampled at a 16 MHz rate, converted to 8-bit binary form, and stored in a fast Input Buffer having a capacity of 2048

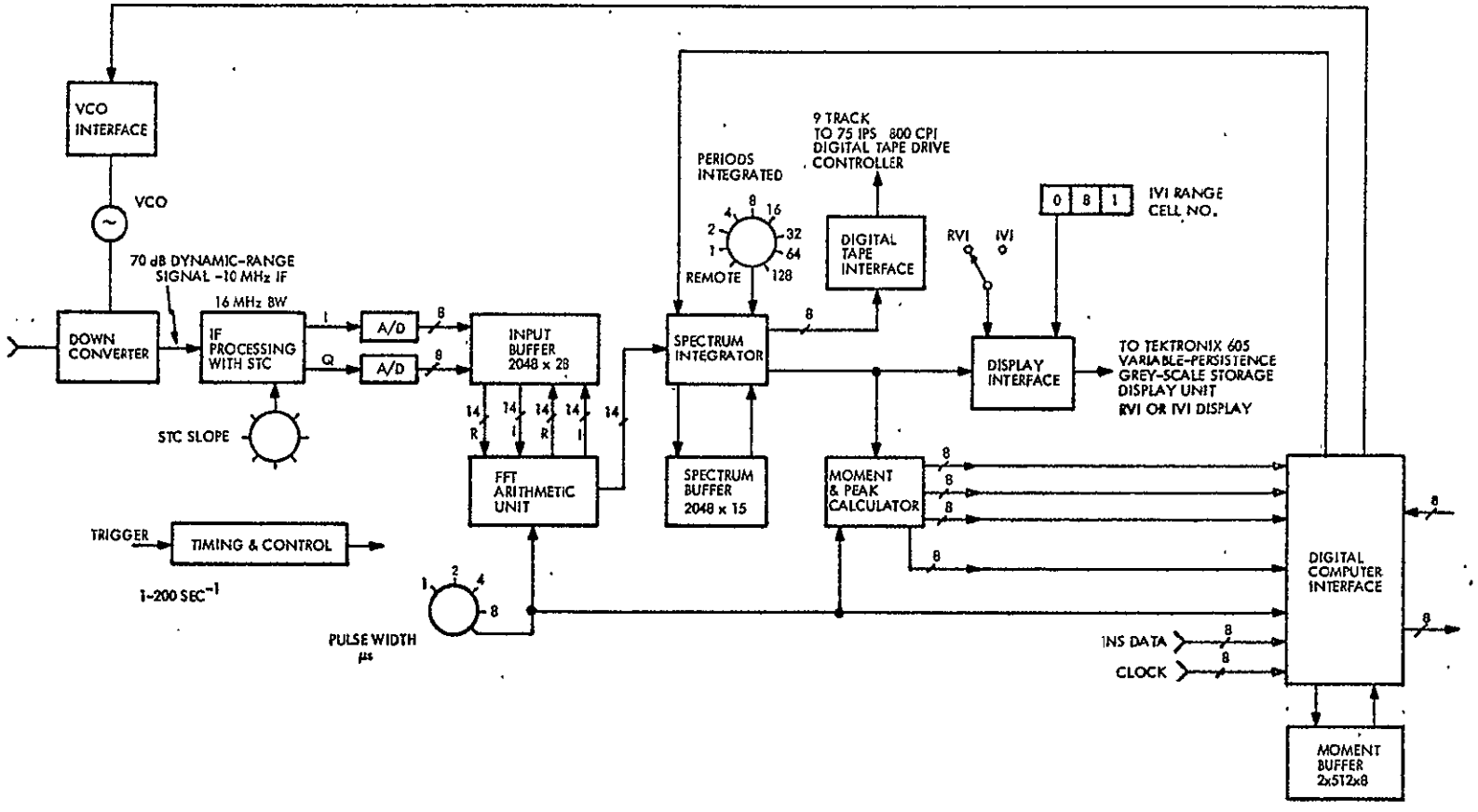

Figure 4-7. Signal Processor Block Diagram.

RAYTHEON COMPANY
EQUIPMENT DIVISION
RAYTHEON

complex samples. Data thus acquired are subsequently spectrum-analyzed by a sequential implementation of the Fast Fourier Transform algorithm which uses the Input Buffer as its working memory.

During the last FFT iteration, the data are not returned to the Input Buffer but rather are magnitude-approximated and entered into a 2048-word Spectrum Buffer within the Spectrum Integrator, which can be set up to batch-integrate between one (no integration) and 128 inter-pulse periods.

The integrator may be controlled by the local integration period switch, or with this switch in the remote position, it may be started or stopped by the computer. The latter feature allows scan synchronization to permit integration over the dwell time of the scanner.

The display interface is designed to present either a Range-Velocity format with intensity modulating the Z-axis of the storage-Display Unit, or an Intensity-Velocity format at a selectable range-cell. The scaling of the display remains constant for each Pulse-Width switch position; only the resolution along each axis varies.

The peak intensity p and the moments

$$m_k = \int_{-8\ \mathrm{MHz}}^{8\ \mathrm{MHz}} f^k X(f)\,df$$

for k = 0, 1, and 2 are obtained in the Moment and Peak Calculator for the spectrum of eqch range cell. These calculations are performed by accessing the Spectrum Buffer while it is not accepting data from the FFT Unit.

The Moment and Peak Calculator outputs are stored in the Moment Buffer of the Digital Computer Interface. Unlike the Input and Spectrum Buffers, this memory is of the double-bucket type where one section is loaded while the other is being read-out by the computer. Ancillary data are entered into registers and precede the spectrum data for each integrator output. The maximum output data rate is 105600 bytes/second.

4.5 DATA PROCESSING

4.5.1 INTRODUCTION

The purpose of the data processing system is to reduce the velocity data along various lines-of-sight, the aircraft position and orientation data, and the meteorological data concerning the storm to a two dimensional velocity flow field in a coordinate system referenced to some initial location of the storm. It is desired to perform as much of the data processing as possible in real time. In this case, real time processing means the processing of data collected during one pass by the storm before the data collection period for the next pass begins. To establish the size of the data processing problem, it is necessary to know the length of time required to make a complete measurement of the storm, the maximum length of time elapsed between two measurements of a given point, and the overall period of the scan. It is reasonable to assume that the maximum length of time required to make a complete pass by a storm is approximately six minutes. The elapsed time between the two measurements of a point in the storm at maximum range is less than 100 seconds. For the scan configuration described in Section 4.3, the time between successive measurements in the same direction is 1.4 seconds. With the sample spacing of 1.4 seconds, approximately 260 samples are obtained in each direction during the six minute period. Each line-of-sight contains 64 range bins, assuming a maximum range of 10 kilometers and the shortest pulse width, which is 1 μsec. There are, therefore, 16,640 velocity measurements made in each direction or a total of just over 33,000 velocity measurements in all.

It is possible to calculate a vector velocity at each intersection of a forward-and backward-looking line of sight. It is important to be sure that there is sufficient data density so that the data at each crossing will usually be independent of that at adjacent crossings. For each forward looking line of sight, there are 71 backward looking lines of sight intersecting it during the 100 second registration time. With data from 64 range bins, only 7 points will contain redundant data.

During a flyby, there will be approximately 18,000 points where a forward looking and backward looking scan cross. Since there are two components of velocity which may be resolved at each point, there are a total of 36,000 velocity outputs to be calculated.

The data processing system must perform a number of functions. First, it is necessary to calculate the velocities from the three moments available from the processor and store them in appropriate locations, along with the supplementary data required to perform the registration analysis. The next step is to locate the position and orientation of the aircraft at the time the data was collected, referenced to the initial position of the storm and to store the necessary information for a later use. To generate the velocity field, it is first necessary to find the coordinates of each point at which a forward and backward looking scan cross; and to identify the correct range bin along each line-of-sight so that the appropriate line-of-sight velocity data can be obtained. Finally, it is necessary to resolve these velocity components in the desired coordinate system and display them in a suitable fashion. While this processing is being done, it is necessary to save the input data and possibly some of the processed data for further analysis.

Consideration should also be given to more detailed data analysis which could be performed after a flight. This post analysis phase could be used to perform better registration if better meteorological data from a weather radar or satellite photos was made available after the flight. Also, this opportunity could be utilized to provide more complicated displays of the data. Some types of data processing, which could not be accomplished during the flight, might be done in post analysis. Finally, data processing to evaluate the system performance in the aircraft should be performed, probably using recordings of the spectrum analyzer output. To meet all these processing requirements, it is necessary to record the three moments output by the moment calculator in the processor, and on occasion, to record the entire spectral output of the processor.

4.5.2 DATA RATES

In considering various potential methods of handling the data, it is necessary to consider the data rates involved. A number of different options exist for processing the data and each option has advantages and disadvantages for specific applications. It is possible to record the raw data, the spectral data, or the moments of the spectra. Furthermore, the data rates are affected by the duty cycle at which measurements are taken (controlled by the scanner) and by pulse integration. For a velocity coverage of ± 40 meters/second, the output of the spectrum analyzer contains 1,024 words of data per pulse. These words consists of the amplitudes of the various filters in various range bins. At a pulse repetition rate of 20 Hz, this results in a data rate slightly in excess of 20 kHz, which may be recorded on a digital recorder. For a pulse repetition frequency of 100 Hz, the data rate becomes over 100 kHz which provides a difficult recording problem. This problem could be alleviated, however, by performing pulse integration on the spectrum analyzer output, and recording the integrated outputs of 5 pulses. The data rate at the output of the moment calculator depends on the number of range bins determined by dividing the maximum range by the size of a range bin. For a maximum range of 10 kilometers and pulse width of one microsecond, there are 64 range bins resulting in 192 moments. At a pulse repetition frequency of 20 Hz, this results in a raw data rate of 3,840 Hz as shown in Table 4-2. This table shows the data rate at two different PRF's, the total number of words collected during 100 seconds which is assumed to be the maximum registration time, and the total number of words collected in six minutes, which is, assumed to be the maximum time required to make a storm measurement. the data rate determines whether or not it is feasible to input the data to the computer for a real time processing. The number of words per maximum registration time determines the amount of storage required to do the real time processing. Finally, the number of words per complete measurement of the storm determines the overall requirement

TABLE 4-2

Average Data Rates

	Raw Data Rate	70% Duty Cycle	Pulse Integration	Velocity Only
Rate	3840 Hz 19200 Hz	2688 13440	269	90
Words/ 100 Sec	$.3 \times 10^6$ 1.9×10^6	$.2 \times 10^6$ 1.3×10^6	21000	7000
Words/ 6 Min	1.4×10^6 6.9×10^6	$.9 \times 10^6$ 4.8×10^6	98000	32667

for processing the data and for recording the data for post analysis. These data rates in the first column represent the peak data rate for the three moments if the processor stores the data during a pulse and reads out the moments at a uniform rate during the inter-pulse time.

These data rates may be reduced significantly in a number of situations. First of all, the scanner will spend a certain amount of time in moving from one position to another, during which time no useful data is collected. For a one-half second sample at each position with 0.2 seconds required for moving the scanner from one position to the other, the resulting duty cycle is 70%. Thus, the average data rate is 70% of the peak data rate as shown in the second column of Table 4-2. Additionally, for most applications requiring the transverse spatial resolution to be 1 to 300 meters, it is sufficient to perform pulse integration over the entire time during which the scanner is in each position. For the rates specified earlier, this time is one-half second and the average data rate with pulse integration becomes independent of PRF and assumes the values shown in the third column of Table 4-2. For most of the processing, the important parameter is the velocity obtained by dividing the first moment by the 0th moment. The velocity numbers are accumulated at the rates shown in the 4th column where it may be observed that there are only slightly more than 32,000 velocity measurements during the entire six minute period. Thus, to process the data from a single pass by the storm, it is necessary to process over 32,000 pieces of data. Also, approximately 7,000 storage locations are required to perform the registration algorithm.

4.5.3 REGISTRATION OF DATA POINTS

The registration of data points and calculation of the velocity flow field is relatively straightforward in the case of a stationary storm and a straight and level flight path. The parameters required are shown in Figure 4-8. This figure shows a measurement being made

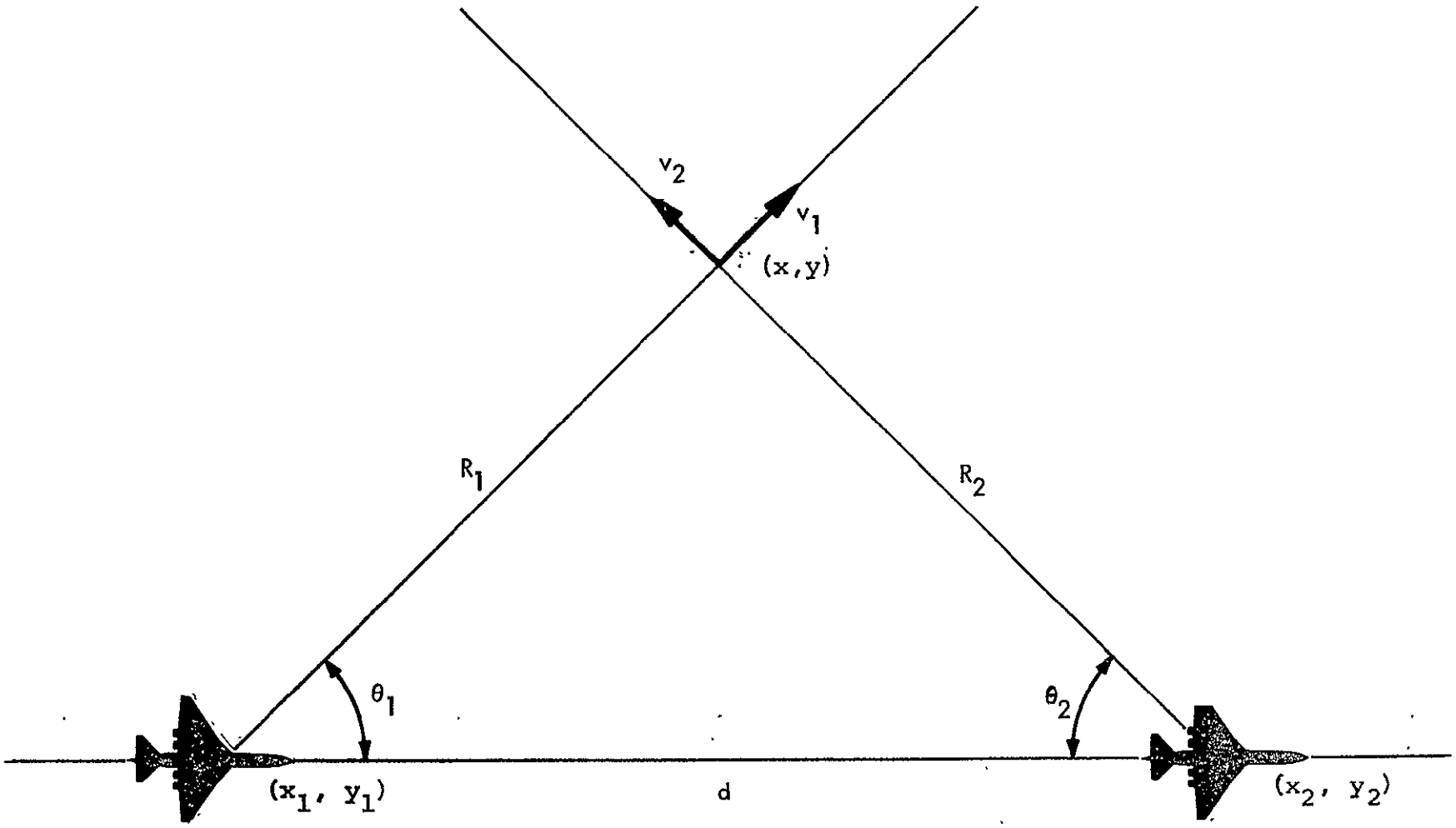

Figure 4-8. Registration with Stationary Storm and Flight Path.

in the forward looking scan position from a position (x_1, y_1) and a later measurement being made from a position (x_2, y_2). Knowing the distance, d, and the angles, θ_1 and θ_2, it is possible to calculate the coordinates of the intersection point (x, y) and the relevant ranges, R_1 and R_2. From the range, R_1, the appropriate range bin may be selected for the first measurement and the velocity along the line-of-sight, v_1, obtained. Similarly, v_2, may be obtained knowing R_2. The only remaining problem is to resolve these two velocity measurements into the appropriate x and y coordinates by well known formulas.

The problem becomes more complicated in the case of a moving storm and variations in the flight path of the aircraft. The procedure to be used involves first establishing an x and y coordinate system, referenced to some initial position of the storm. Then, as the storm moves in time, it is possible to determine the original coordinates of any point in space by subtracting the product of the storm velocity and time from the actual x and y coordinates. In Figure 4-9, a measurement is made in the forward looking scan position from a known location in space and at a later time, a backward looking measurement is made from another position. Knowing the aircraft position, and the motion of the storm since the time associated with the referenced coordinate system, it is possible to determine the coordinates of these positions relative to the initial coordinate system. These are shown as (x_1, y_1) and (x_2, y_2). Additionally, if the orientation of the aircraft is known, the angles, θ_1 and θ_2 shown in Figure 4-8, are known, and it is possible to calculate the vector velocity at the point x, y. The range R_1 to be used in getting v_1 is the range from the point (x_1, y_1) to the point (x, y) in the original coordinate system. This corresponds to the velocity data taken at the point, p_1, as shown in Figure 4-9. A similar analysis holds for the data from the second measurement. It can be concluded that is possible to perform the registration process even with a moving storm and flight path variations, provided that the

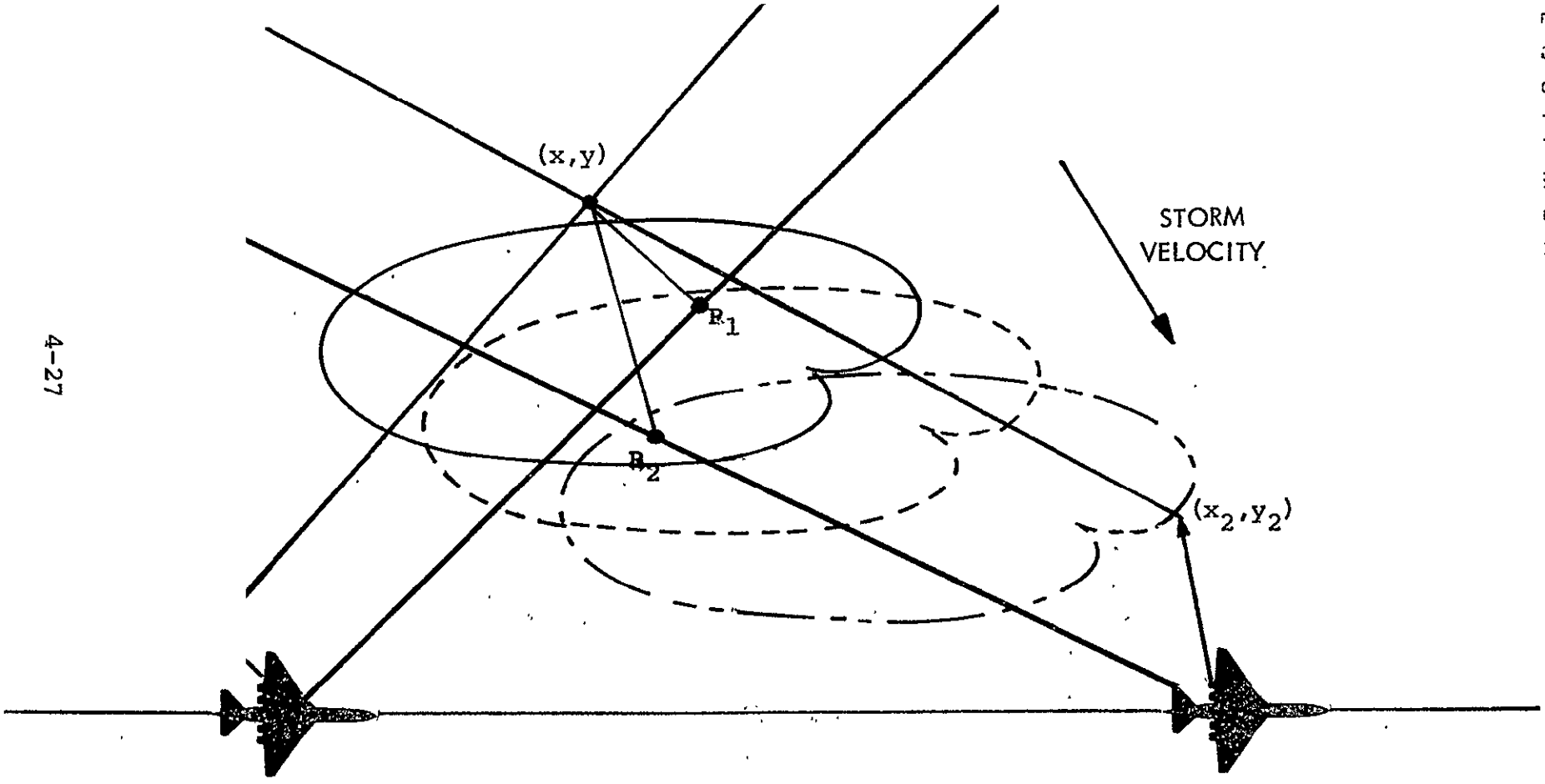

Figure 4-9. Registration with Storm Movement and Flight Variations.

storm velocity vector, the aircraft position, and the aircraft orientation are known. Figure 4-10 shows a set of forward and backward looking measurements and illustrates the process of registering the data points. First, one forward looking measurement is made and the data is recorded. When the next backward looking measurement is made, one crossing is available to perform the registration and velocity calculation and a new set of forward looking data is obtained and stored. The next set of backward looking data results in two registration points and two additional velocity vectors to be calculated. This process continues until the crossing point exceeds the range capability of the system at which time the data from the first measurement may be removed from storage to make room for new data coming in.

4.5.4 REAL TIME VELOCITY FIELD PROCESSING

The velocity flow field analysis can be accomplished with a program such as the one illustrated in Figure 4-11. The program consists of a long term storage routine to put the moment data on tape for post analysis, a flow field processor to perform the registration and velocity calculations, and a set of display routines to produce useful displays of the vector velocity. The long term storage routine is straightforward and only involves directly transferring the data to magnetic tape. The flow field processor must perform all of the calculations described in Section 4.5.3 to produce the vector velocity flow field. It consists of the data setup routine, the registration preprocessor and the velocity field processor. The data setup routine determines the velocity from the first and 0th moment and may peform some interpulse averaging depending on the particular parameters of the system. The registration preprocessor converts the coordinates of each line-of-sight to the coordinates of the initial reference system. This involves locating the origin (the aircraft position) in the initial coordinate system and determining the "slope", m, of the line-of-sight in x-y space. The necessary parameters are then stored along with the velocity data in appropriate

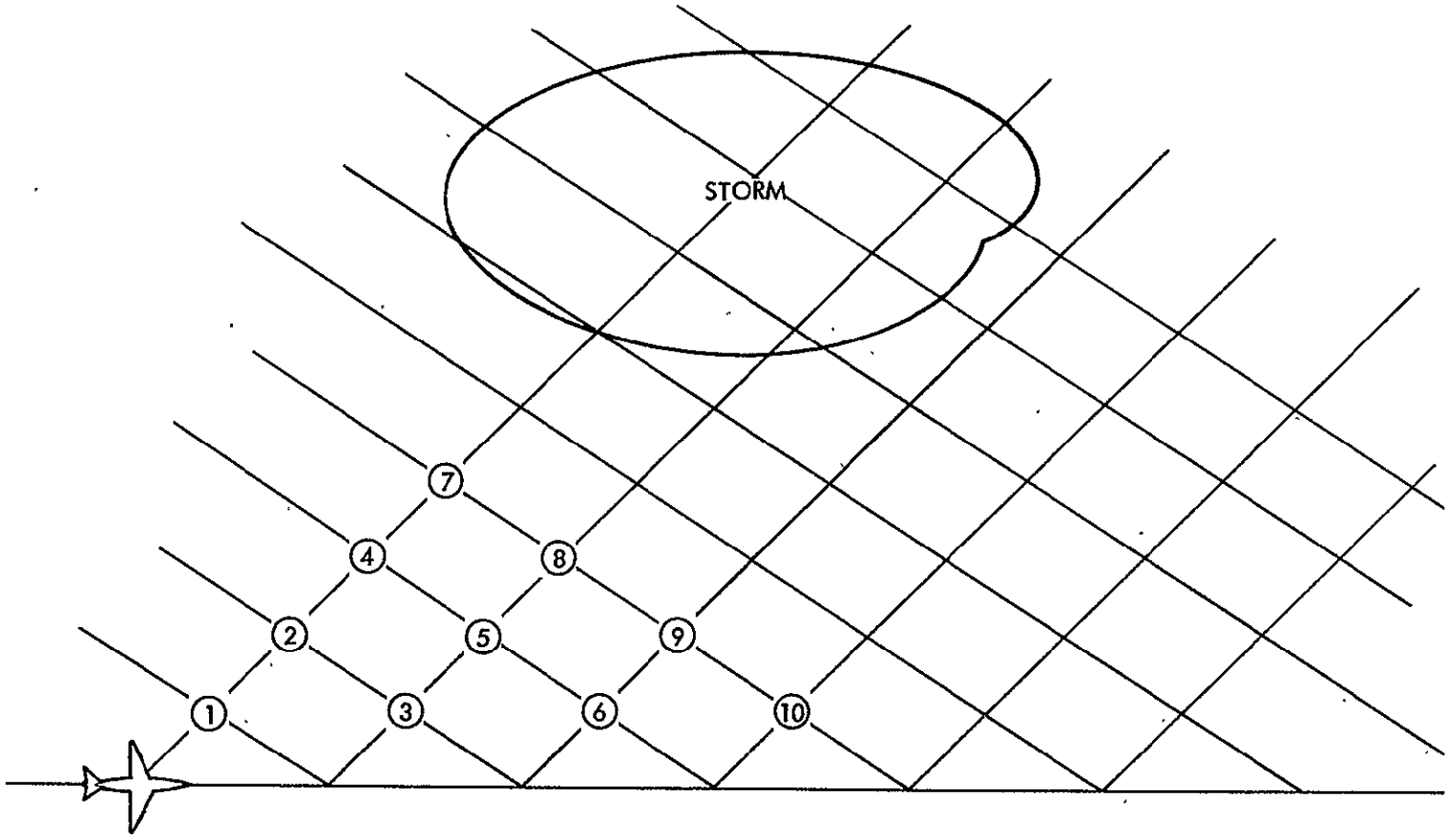

Figure 4-10. Registration of Data Points.

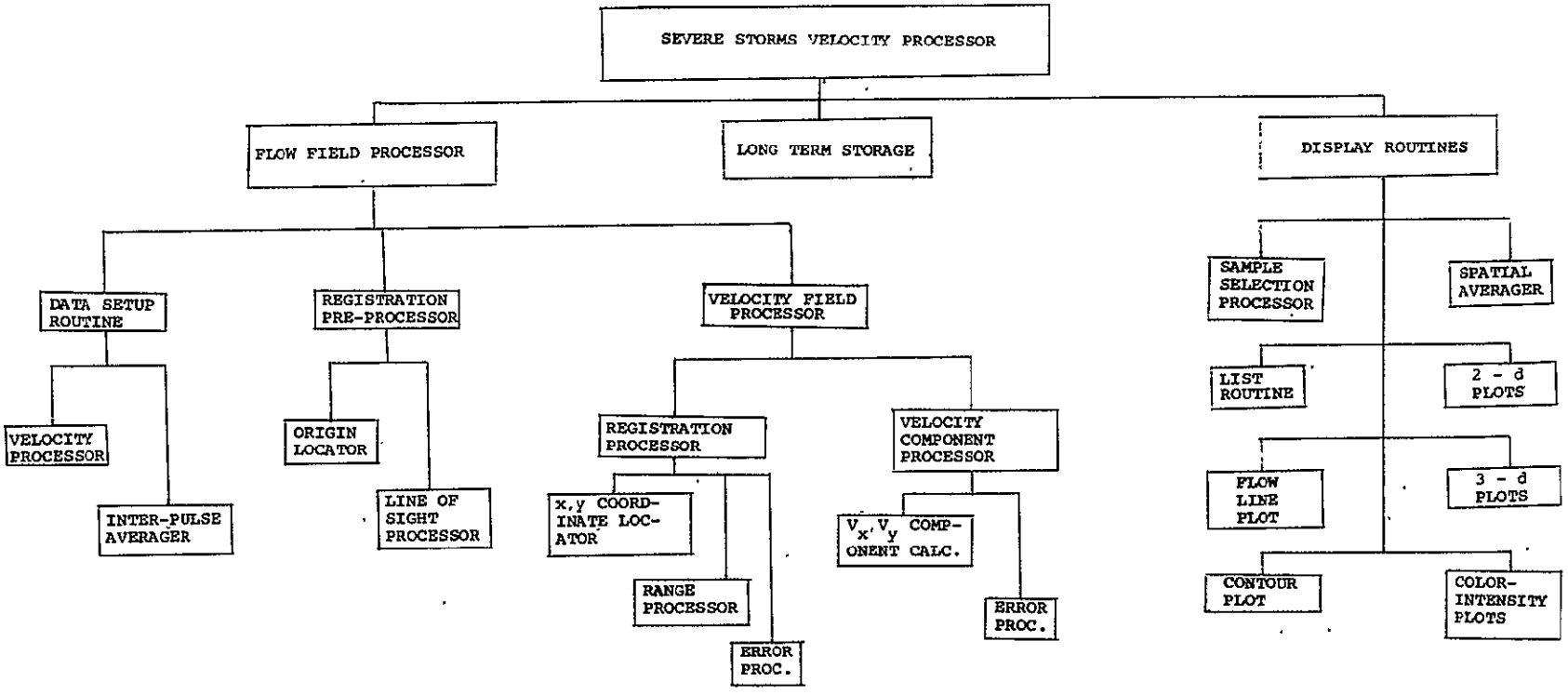

Figure 4-11. Severe Storms Measurement Data Analysis Program.

RAYTHEON COMPANY
EQUIPMENT DIVISION
RAYTHEON

memory locations which will be discussed in more detail later. The velocity field processor performs the functions of registration and velocity component analysis. The registration involves locating the x and y coordinates of the intersection of each pair of measurements and calculating the appropriate range bins to obtain velocity. Additionally, an error processor is included to eliminate cases where incorrect registration occurs. The x and y coordinates are located using the following equations;

$$x = \frac{y_2 - y_1 + m_1 x_1 - m_2 x_2}{m_1 - m_2} \tag{4-1}$$

$$y = y_1 + m_1 (x - x_1) \tag{4-2}$$

These equations involve six additions, one multiplication, and one division, provided that the products, m_1, x_1, m_1x_1, and m_2x_2 are available in storage. The square of the range for each measurement may be determined by the following equations;

$$R_1^2 = (x - x_1)^2 + (y - y_1)^2 \tag{4-3}$$

$$R_2^2 = (x - x_2)^2 + (y - y_2)^2 \tag{4-4}$$

which require six additions and four multiplications. The range bin may be determined from R^2 using a lookup table. The error processor should insure that both ranges are within the limits for which data was recorded and that the roll angle error was sufficiently small so that good registration can be obtained. If these conditions are not met, the crossing should be ignored and data from the next crossing processed. Otherwise, the velocity components should be calculated next. These may be obtained using the equations;

$$v_y = \frac{v_1 \cos \theta_2 - v_2 \cos \theta_1}{\cos \theta_2 \sin \theta_1 - \cos \theta_1 \sin \theta_2} \tag{4-5}$$

$$v_x = \frac{v_1 - v_y \sin \theta_1}{\cos \theta_2} \tag{4-6}$$

These equations require three additions, five multiplications, and two divisions provided that the sines and cosines of the angles involved have been previously calculated. The error processor should be used to avoid processing data for which unreasonable velocity measurements have been made. This could be accomplished by thresholding and by comparison to adjacent measurements.

At this point, it should be recognized that the velocity field processor will be used once for every intersection while the registration preprocessor will be used only once for each measurement line-of-sight. Thus, for the six minute run which has been discussed earlier, consisting of 260 samples in each direction, the registration preprocessor must be used 520 times while the velocity field processor must be used approximately 18,000 times. It is, therefore, highly desirable to perform as many of the calculations as possible in the registration preprocessor. For example, sines and cosines of θ_1 and θ_2, as well as the product of the slope and the x coordinate are used repeatedly in the velocity field processor. These should be calculated once during the preprocessing phase, and stored for later reference. The data could be stored in the format shown in Figure 4-12. This figure shows a two dimensional array of size 64X64. This could include the data from all forward looking scans for 64 successive scans, including range bins from approximately 1/2 kilometer to 10 kilometers using a 1 microsecond pulse width. The first column contains data from the first forward looking measurement. The first two rows contain the x and y coordinates, the third row contains the slope, the forth row contains the product of the slope and the x coordinate, the fifth and sixth row contain the sine and cosine of

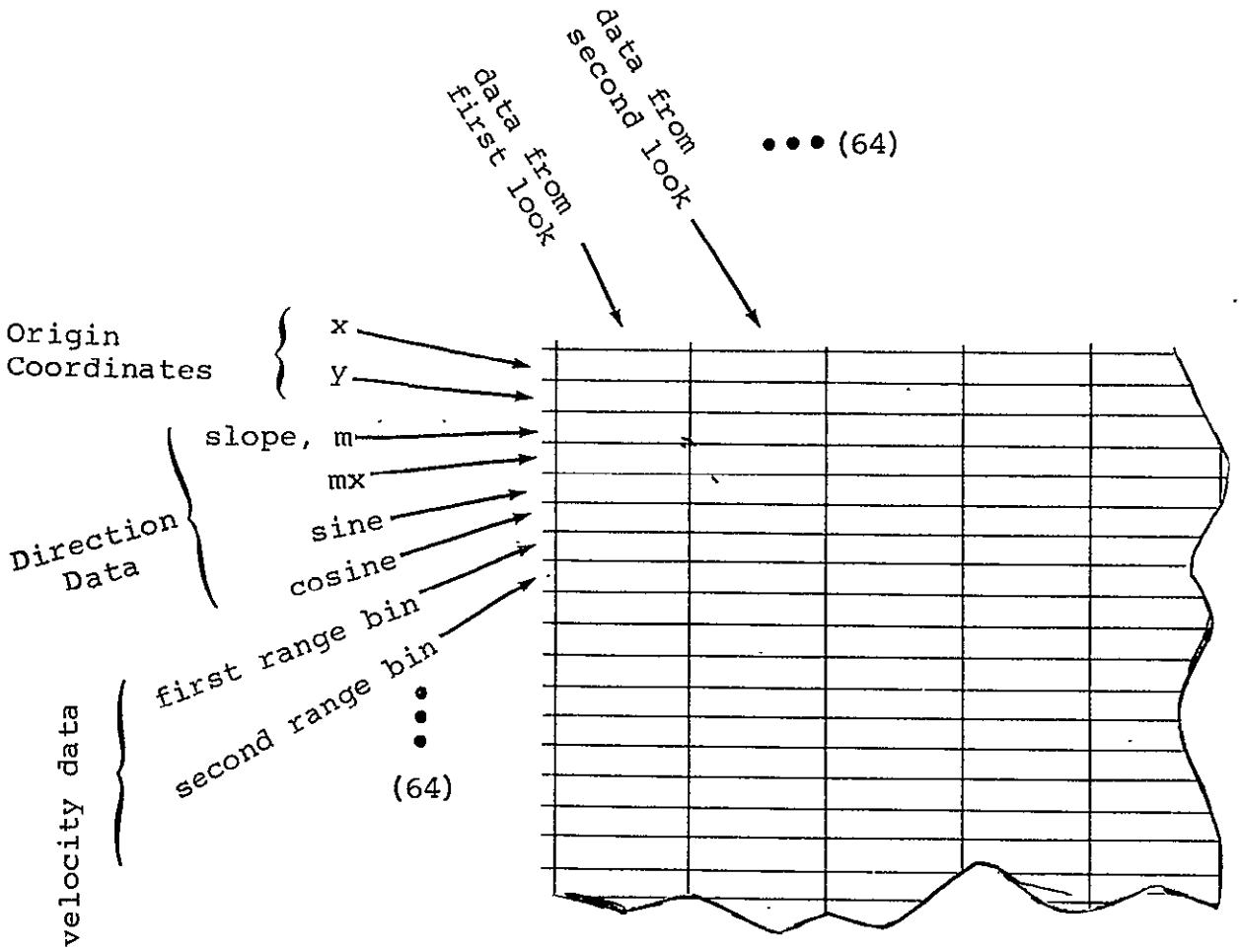

Two areas are required at least 64 x 64; one for forward looking data and one for backward looking data.

Figure 4-12. Setup of Data Storage.

the angle θ_1, and the remaining rows contain the velocity data in successive range bins. These memory locations would be filled the data setup routine and the registration preprocessor and would be used by the velocity field processor. It should be noted that using this technique, the complicated operations of calculating sines and cosines, and the multiplication of m and x which is needed repeatedly can be accomplished at one time and save for later use. After 64 forward looking measurements have been completed, the 65th may be stored in the location occupied by the first, since all registration operations requiring the first measurement will have been completed.

To minimize the storage requirements, the display routines should be interfaced with the other portions of the program in such a way, that the vector velocity data is used in the plotting routines as it is calculated. In general, six different display formats could be considered. The first is a simple listing which would consist of the x and y coordinates in space and the x and y velocity components. The next level of simplicity is a two dimensional plotting routine which would plot, for example, the x component of velocity as a function of y. A variety of different two dimensional plots could be performed, including different components of the velocity, magnitude, or direction, as functions of different spatial coordinates. The next level of complexity consists of three dimensional plots where, for example, the x component of velocity could be plotted as a function of x and y. Again, a variety of different velocity values could be plotted against the x and y coordinates. A variation of the three dimensional plot is the contour plot which could be used to show lines of constant velocity magnitude in an x-y coordinate system. These plots require all the data to be present before the contour can be constructed and could probably not be done in real time. Another potential display is that of the velocity flow lines. This would result in a display which would be easy to understand, but it probably cannot be done in real time. The color intensity display is particularly well suited for displaying the two components

of velocity as functions of the two spatial coordinates. The intensity could be modulated with the magnitude of the velocity while the color is modulated with the direction. This display has the advantage of being feasible for real time display, since each vector velocity can be displayed as it is calculated without the need for storing the entire vector velocity field. The color display will produce unique signatures for various types of pheonomena, such as inflow, outflow, and vortices. Shears and turbulence should be easy to recognize and photographs of the color display could be used for constructing rough flow field maps by hand.

In several types of displays, particularly in real time analysis, it will be desirable to reduce the amount of data displayed. This can be done in one of two ways: the region to be processed may be selected in terms of its x and y coordinates, so that only a small region of space is displayed, or spatial averaging may be used to combine adjacent data points and reduce the overall amount of data in the display. The two and three dimensional plots are potentially useful for real time applications, but display a limited amount of data. The color intensity plots are capable of displaying all of the data in real time. The list routine would be primarily used for diagnostic analysis and would most likely be used in post analysis for most applications. The flow line and contour plots would produce useful information, but must be done in post analysis.

4.5.5 POST ANALYSIS

In addition to the real time data analysis, provision should be made for post analysis of the data to provide more complete displays and to allow for system evaluation. The post analysis capability should include the program used for real time data analysis and other programs for special applications. It may be possible in post analysis to improve the registration of data points using more accurate data on the motion of the storm, collected from ground based radars or from satellites. At this time, it might be desirable

to use some of the more complicated displays, such as contour plots and flow fields which are not suitable for use in real time. In addition, the post analysis phase would be useful for more sophisticated processing, requiring better spatial resolution, to obtain, for example, convergence, circulation, shear, and turbulence measurements. The post analysis phase would also be useful for development and testing of new algorithms for specific purposes. In testing the pulsed LDVS for severe storm measurements, it is necessary to develop some methods of evaluating a system performance. This can be accomplished in post analysis by using the spectral data recorded from the output of the spectrum analyzer in the processor. Additionally, this data may be used in studying details of the flow field and in evaluating the feasibility of various algorithms for processing the severe storms data.

4.6 TEA LASER SYSTEM

The use of a TEA (transverse, electric, atmospheric) laser transmitter will significantly improve performance in moderately adverse weather. This requires a TEA laser transmitter, frequency-locked to a local oscillator laser, and interferometer modifications.

The important laser parameters are pulse energy, pulse length, repetition rate, and coherence. Several pulsed laser transmitters can be considered for severe storm measurements; the MOPA, and various types of TEA lasers. The MOPA (Maser Oscillator-Power Amplifier) system has been successfully realized in the form of a Clear Air Turbulence Detection System developed for NASA. The nominal characteristics of this system are:

Pulse Energy:	25 mJ
Repetition Rate:	140 sec^{-1}
Pulse Widths:	2-10 μsec

This system forms 2 watt optical pulses by means of an optical modulator and amplifies these pulses in a single pass, low pressure CO_2 amplifier with approximately 36 dB of small signal gain and approximately 10 mJ/meter of available energy in the saturated regime. The output power of the MOPA system is limited ultimately by the tendency of the amplifier to self oscillate since small signal gain of longer amplifiers is large enough to cause self oscillation. Exceeding this output power will require the development of isolators and saturable absorbers and will be achieved only at a great increase in system complexity and size and weight. In order to obtain the maximum energy in a pulse, it is desirable to increase the number of CO_2 molecules in the active region. This requires an increase in the active volume of the laser, or in the density of CO_2 molecules in the volume. This is accomplished in both the E-Beam and TEA configurations. The E-beam offers very good control with the effective triode structure of the device, where electrons from a long gun are accelerated through high potential and penetrate through a titanium foil to ionize a high pressure gas mix containing CO_2. However, for airborne applications this type laser must be rejected because of the very high voltages involved.

An alternative approach is to investigate the possibility of using TEA laser cells in a coherent detection configuration. The TEA cell is conventionally used as a pulsed oscillator, and emits pulses with time duration approximately 100 nanoseconds and peak powers in the megawatt range. These lasers operate at true atmospheric pressure, and employ a large volume transverse pulsed discharge between Rogowski electrodes. Pre-ionization can be accomplished either with trigger electrode wires, or by ultra violet flash absorption in a seed gas such as tripropylamine. The conventional TEA laser is, however, frequency unstable, and may operate on several P-lines during a pulse, or may run in frequency in a single P-line during a pulse. The frequency instability and the intrinsic short pulse length, in addition to the lack of a local

oscillator beam, can be overcome by application of the techniques described in the following paragraphs.

The TEA oscillator may be stabilized by injection of energy from a low power oscillator in several ways. One class of lasers treats the TEA cell as a resonant amplifier into which a pulse of the desired optical frequency is injected. If the TEA cell cavity is resonant at this frequency, the pulse will effectively be amplified by many passes through the cell and will emerge as a pulse containing essentially all of the energy available from the TEA cell. This approach, typically results in very short pulses on the order of 100 nsec in length, and requires constant adjustment of the amplifier cavity to keep it in resonance with the master oscillator, which is a practical disadvantage.

Both the frequency stability and the pulse width of a TEA oscillator can be controlled by utilizing a continuous-wave, low pressure discharge tube to provide a stable frequency to the TEA cell. The TEA cell is then electrically pulsed, the gain rises, and the recirculating power density is orders of magnitude higher than it is in the conventional TEA operation, the gain does not rise as high, and the pulse is stretched significantly in time duration.

In a system using a TEA transmitter, several unusual requirements must be met by the interferometer to assure proper system operation. For instance, the signal and heterodyne detector must be protected from the transmitted pulse so that they neither saturate nor are damaged. The interferometer must include beam blocking and unblocking devices to accomplish appropriate beam control before, during, and after transmission, and during signal reception.

The next requirement is to establish a local oscillator frequency which can be used for heterodyning the returned signal from the long range atmospheric target. The TEA cell can be pulsed such that the unit transmits a pulse at a predetermined frequency with a

frequency stability during the pulse equal to or better than the pulse duration bandwidth. This pulse is transmitted to the atmospheric target, and received by coaxial transmitter/receiver optics and directed to a heterodyne detector which also sees a sample of the local oscillator beam whose frequency has remained constant during transmission and the round trip transmit time. Heterodyne detection is accomplished in the conventional manner, and the velocity and velocity distribution of the aerosol target are determined through appropriate electronic processing.

The development requirements for the interferometer are in three areas: optics, choppers and stabilization loops. At the high intensities developed, damage to dielectric coatings becomes a potential problem and damage to all optical surfaces as a result of dust incineration must be guarded against. Mechanical choppers present synchronization and timing problems while Electro-optic modulators are limited by coating and aperture problems. Stabilization loops must be developed to handle the frequency excursions which will occur with this system.

SECTION 5

THREE-DIMENSIONAL SEVERE STORM MEASUREMENT SYSTEM

5.1 INTRODUCTION

The Three-Dimensional Pulsed LDV System described in this section is very similar in form and function to the two-dimensional system described in Section 4. The major difference is that the three-dimensional system incorporates a different scanner so that data can be taken from a volume instead of a single plane. This will allow calculation of up to three velocity components (V_x, V_y, V_z) at points in a volumetric grid (x, y, z).

There are at least three possible flight profiles which will allow the collection of data from the regions around a storm. First, the aircraft can fly at an altitude which is below the storm and scan the vertical region above the aircraft (see Figure 5-1). Second, the aircraft can fly above the storm and use a downward scan. Finally, the aircraft can fly at an altitude which is about half of the storm height and perform a scan from the side of the aircraft.

Flying below the storm is probably not practical since the aircraft altitude would be only about 1 km above ground level which could be difficult in regions of uneven terrain. Also, the turbulence and other factors make this a more difficult and dangerous flight profile. Flying above the storm might be possible if the storm heights are less than 30,000 feet; for higher storms, this profile is impractical. It appears that the best choice is to fly a straight and level course at an altitude of about 15 to 20 thousand feet and at a distance of about 10 to 15 km from the storm contours.

The second major difference between the 2-D and 3-D systems is the increased data rate and resulting increase in computer storage and data analysis time. In addition, a larger number of different displays will be required to effectively present the processed data.

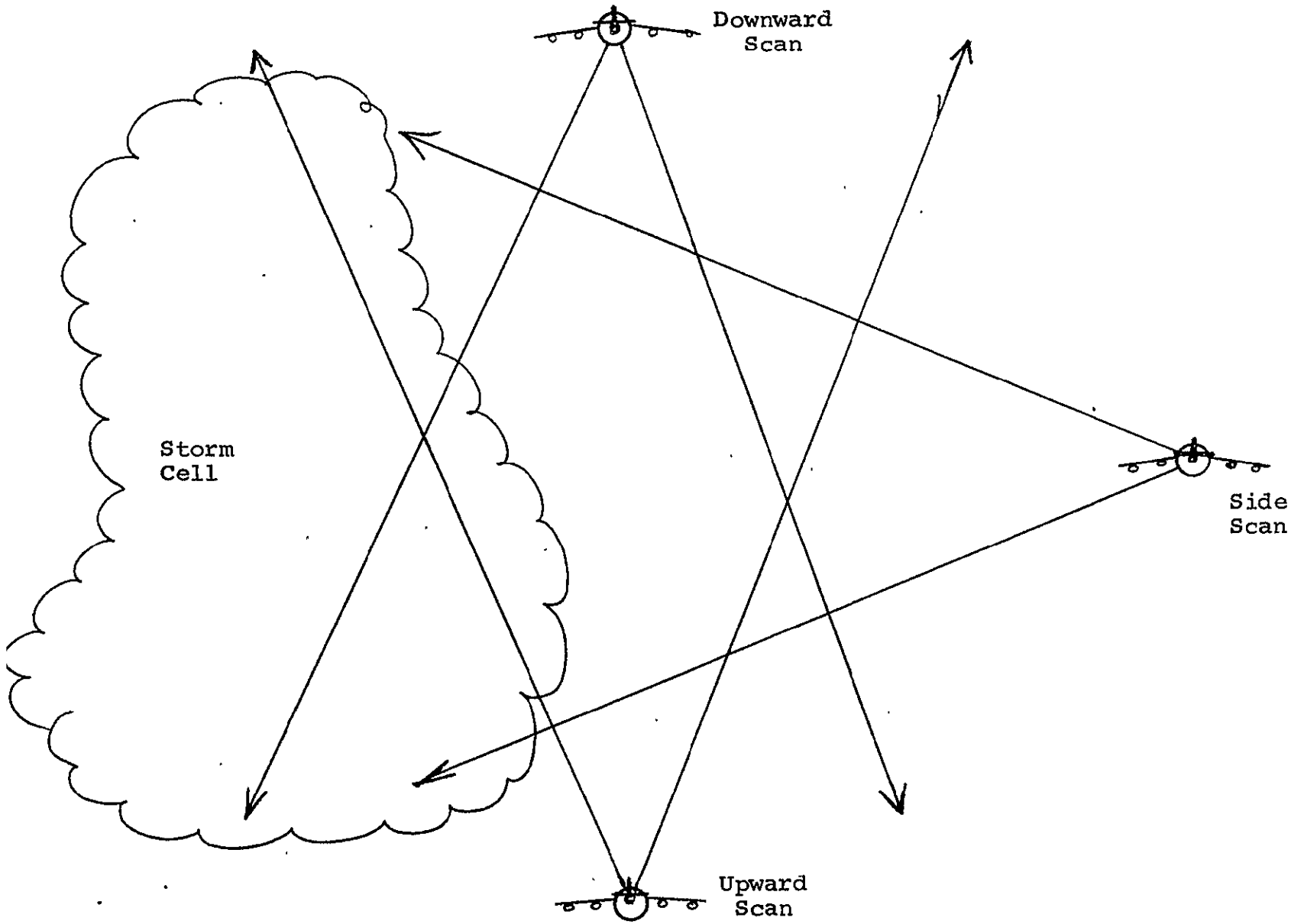

Figure 5-1. Three Possible Flight Profiles.

RAYTHEON COMPANY
EQUIPMENT DIVISION
RAYTHEON

5.2 DATA ANALYSIS

The Three-Dimensional Pulsed LDV System provides three-dimensional spatial coverage of the storm. This results in an increased amount of data, including two-dimensional velocities at various elevations. It also introduces the possibility of obtaining a three-dimensional velocity vector. This will result in an increase in analysis time, probably limiting the possibility of real time analysis to slightly more than can be done with the two dimensional system. To accommodate these changes, new display formats and analysis programs will be required.

The principle change is an increase in data rate, since instead of integrating all the pulses in a given direction, it is necessary to divide these pulses among the various elevations. A potential approach to this problem is to store the data on a disc or tape, possibly processing one or two elevations in real time. Then, after the flight, the complete data analysis could be done. While the program described in Section 4.5 can be used as a basis for the three-dimensional analysis, it would require substantial modification of the initial data handling.

The three-dimensional measurement provides the possibility of obtaining three dimensional velocity measurements as well as three-dimensional spatial coverage. This could be accomplished either by comparing velocity data at adjacent elevations, using the assumption of uniform velocity over a size scale larger than the distance between measurements, or by integrating the continuity equation using suitable boundary conditions. In either case, a considerable amount of new programming is required to establish x, y, z coordinates of the measurement locations and to determine the third velocity component.

The display routines described in Section 4.5 may be used with the three-dimensional data, and it is anticipated that in the case of the three-dimensional system, a large number of different displays

should be considered. These should be produced in post analysis with operator interaction, so that, for example, upon observing an interesting phenomenon at a point (x,y) in a color intensity display, it is possible to request two-or three-dimensional plots or contour plots of the three-dimensional data in the region around that point. This necessitates storing all the velocity data at one time so that any portion can be recalled. This will greatly increase the storage requirement of the computer, and probably will require disc storage of the velocity data.

In summary, the three-dimensional analysis program will be an extension of the two-dimensional case with several new features added to the software, increased data storage capability, and a shift in emphasis from real time to post-flight analysis.

5.3 THREE-DIMENSIONAL SCANNER

If the flight profile described in Section 5.1 is assumed; i.e., flying straight and level at an altitude of about 1/2 the storm height, several possible scanner concepts can be considered. In general, the scanner chosen must direct the laser beam to a series of vertical sweeps over an elevation angle of $\pm 20^{\circ}$ from the horizontal, in order to provide total storm height coverage; the forward motion of the aircraft provides the remaining spatial dimension. Intersecting observations of a resolution cell from different "look" angles provide the velocity resolution, as described for the 2-D scanner in Section 4.3. Thus, the 3-D scanner provides a series of scan planes which can be registered so that a three-dimensional velocity wind field vector can be obtained throughout the three-dimensional measurement volume. Figure 5-2 shows a typical 3-D scan pattern.

5.3.1 DESIGN GOALS

The design goals for the 3-D scanner are similar to those of the 2-D scanner described in Section 4.3.1, except that a third

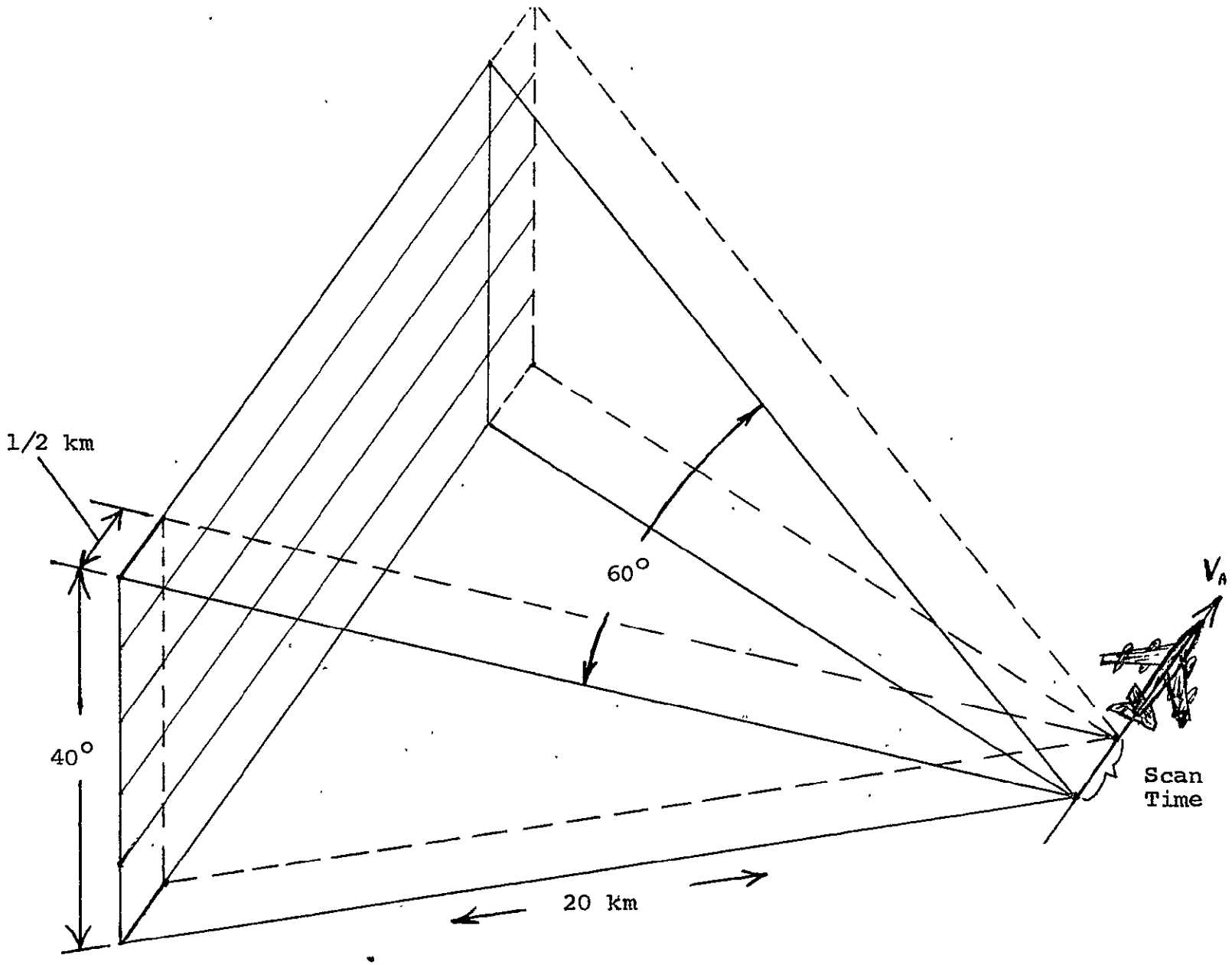

Figure 5-2. Typical 3-D Scan Pattern.

vertical scan dimension is added. In order to obtain a vertical resolution of 200 M at a range of 20 km, as in the 2-D scanner, the vertical scan of 40° must have an absolute positionability of $\pm 0.6^{\circ}$.

The time to sweep from 30° aft to 30° downward has already been calculated to be 0.2 seconds for the 2-D scanner which provides the required spatial resolution (with 11 integrated pulses per scan line). This means that the total time left to make a 40° vertical sweep is only 0.2 seconds and no integration would be possible. The vertical angular rate is then $40^{\circ} \div 0.2$ seconds, or 200° per second for an aircraft moving at 500 knots; the rate could be cut to 70° per second if the aircraft speed was reduced to 250 knots. Unfortunately, this is still too high for a continuous scan system since lag angle considerations limit the angular rate to 12.5° per second at a 20 km range for a 12 inch system; thus, a point position scanner must be used.

One important consideration is the location of the 3-D scanner. Since the line-of-sight must be unobstructed over a $\pm 20^{\circ}$ vertical by $\pm 30^{\circ}$ horizontal solid angle, the aircraft geometry is very important because the wing and engine pods cause obstructions from most main cabin locations. The cargo hold might house a scanner but this makes it inaccessible during flight.

If it is desired to reduce the very costly aircraft modifications required for a 3-D system, it might be necessary to limit the nominal 12 inch telescope aperture to 8 inches; this would allow using a standard passenger window (located as far forward as possible) as the exit port, which would require almost no modifications.

The technique of using aircraft roll for providing a vertical scan has been found to be impractical since roll rates of 5-10 times those allowed are required; thus, a hardware scanner is necessary.

5.3.2 DESIGN CONCEPTS AND TRADE-OFFS

Of the many possible 3-D scanner design concepts, six appear to have the most chance of performing the job and meeting the design goals. In order of increasing cost and complexity, and decreasing accessibility during flight, the scanner designs are:

1) A point-position, rotating wedge with an 8 inch aperture located in the main cabin.
2) A point-position, rotating wedge with a 12 inch aperture located in the main cabin area.
3) A point-position, rotating wedge with 12 inch aperture located in the forward cargo hold.
4) A 2-axis mirror scanner in the forward cargo hold.
5) A scanning Coudé telescope in the cargo hold or on a pylon.
6) A 2-axis scanner mirror in a pod outside of the main cabin.

The least complex approach to the scanner problem is defined in 1) above. Since it is highly desirable to locate the laser system and scanner in the main cabin area to reduce environmental problems, this approach has been investigated.

The main problem with the cabin area is that the only locations which afford an unobstructed view up and down are those areas forward of station No. 470 (see Figure 5-3). Unfortunately, there is not too much space available in this area, but a compact scanner could be located there if a careful design was done. If aircraft modification costs are to be minimized, the only solution which would not require cutting the fuselage is to use an existing 10 inch by 14 inch passenger window modified to take a germanium window. This means that the maximum telescope aperture would be limited to 8 inches which degrades S/N by 3 dB. In order to obtain the largest use of this window, the scanner must rotate the beam about axes

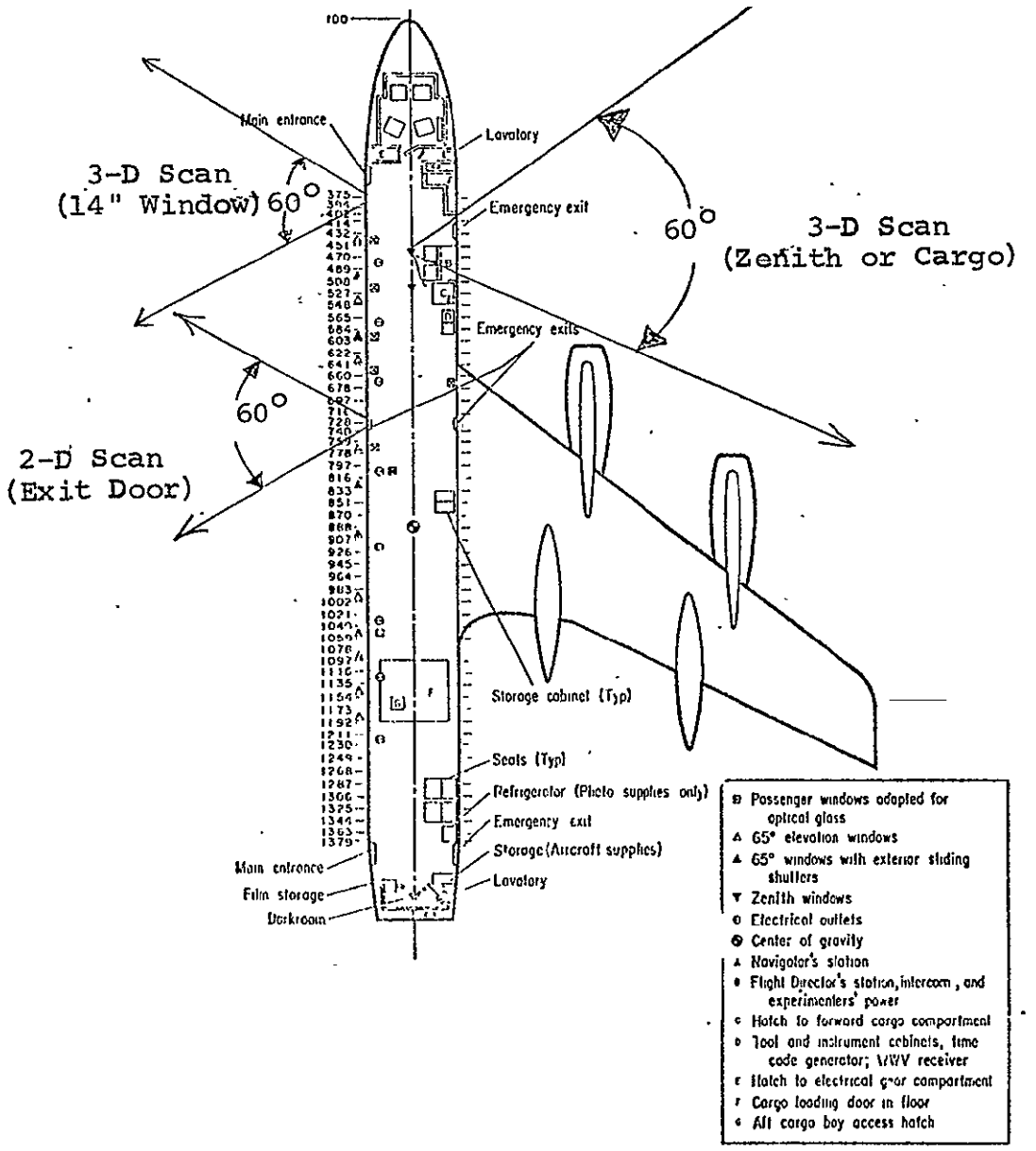

Figure 5-3. 3-D Scanner Locations.

which are as close to the window as is possible; a rotating wedge scanner does this and an 8 inch wedge is not an impractical size to fabricate.

The wedge scanner and the pattern it produces are shown in Figures 5-4 and 5-5. The fact that the scans are portions of a circle is unimportant since the registration is handled by computer. The scan rate required (from the previous section) is from 70° to 200° per second. Since lag angle considerations limit this, the wedge scanner must operate in a point-position mode. The vertical spatial resolution is tied to the horizontal resolution by the aircraft speed and also depends on the maximum PRF available. Thus,

$$\Delta R_h = 2(t_v + t_h)\ V_A$$

$$\Delta R_v \approx \frac{\theta_S^v\ R_{max}}{(P.R.F)\ t_v}$$

where ΔR_h = Maximum Horizontal Resolution

ΔR_v = Vertical Resolution

t_v = Vertical Scan Time

t_h = Horizontal Scan Time

V_A = Aircraft Speed

θ_S^v = Vertical Scan Angle

R_{max} = Maximum Slant Range

(P.R.F.) = Pulse Repetition Frequency

These equations are true for a linear scan and approximate for portions of a circular scan. To find out if the wedge scanner or 2-axis mirror scanner is practical, the scan times must be calculated

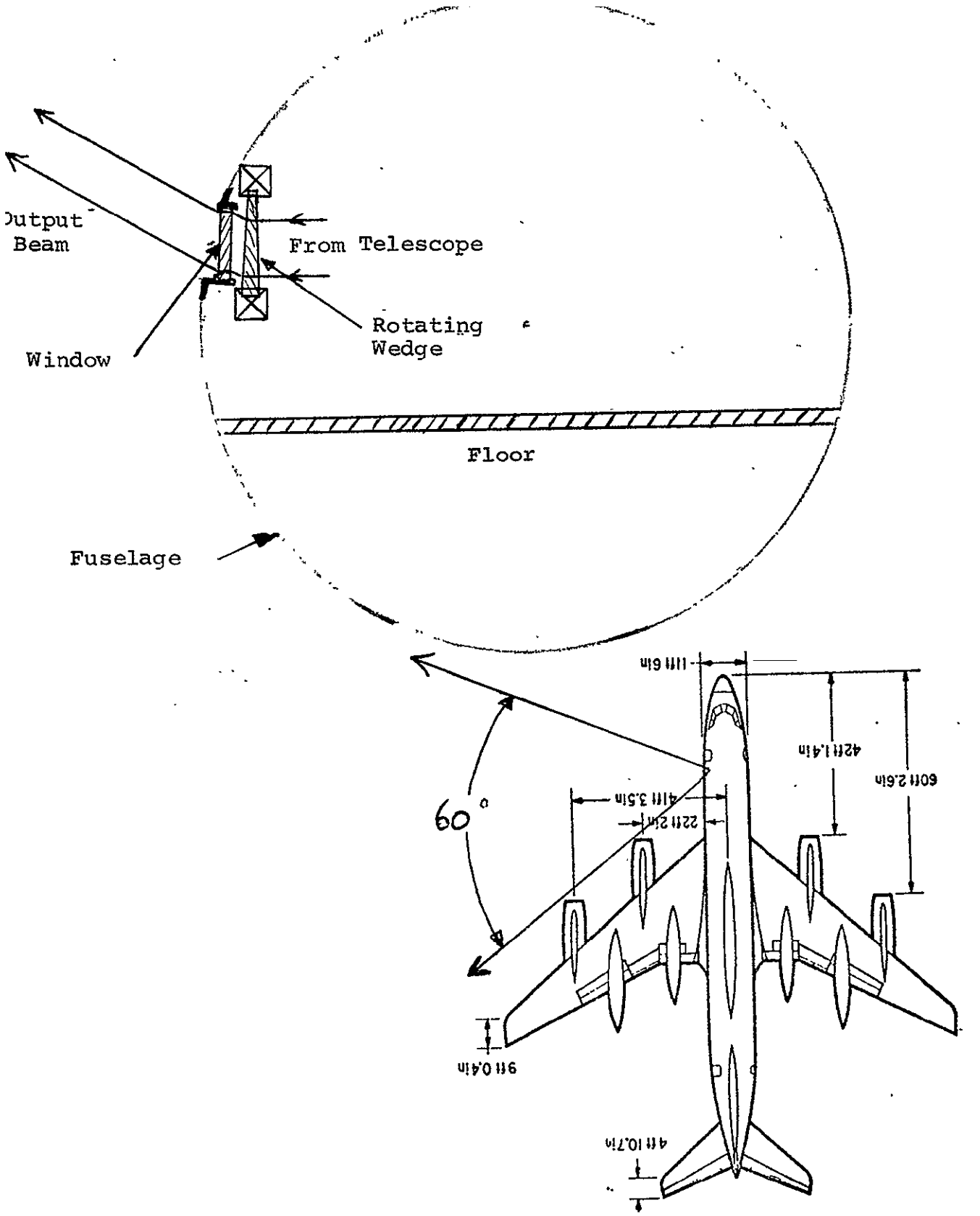

Figure 5-4. Cabin Location of Wedge Scanner.

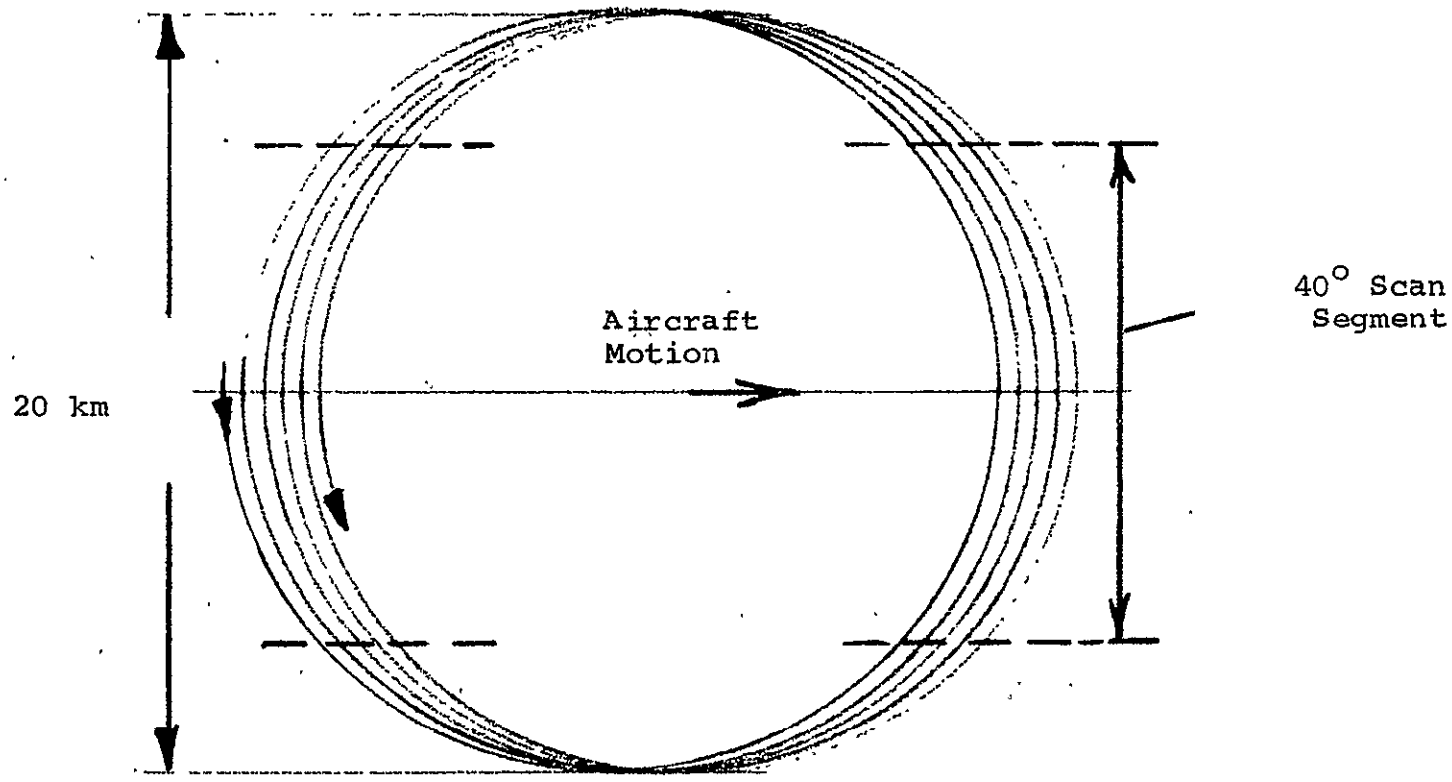

V_A	= 250 knots	Total Scan Time	= 4.4 Seconds
P.R.F.	= 25 Hz	Resolution	= ½ km Vertical and Horizontal
Vertical Scan	= 40°	Range	= 20 km
Cone Angle	= 60°		

Figure 5-5. Typical Wedge Scan Pattern.

and the required accelerations obtained. As an example, assume:

$$V_A = 250 \text{ knots}$$

$$P.R.F. = 25 \text{ Hz}$$

$$\theta_S^V = 0.69 \text{ Radians } (40^\circ)$$

$$R_{max} = 20 \text{ km}$$

and let $\Delta R_h = \Delta R_v$, then

$$t_v^2 + t_v t_h = 2.21 \text{ and with } t_v = 1 \text{ sec.},$$

t_h is calculated to be 1.21 seconds. The resolution is then 0.55 km which is reasonable since the range resolution of a 2 μsec. laser pulse is about 0.30 km.

The required maximum acceleration is given by

$$\alpha_{max} = \frac{4\ \Delta\theta_S}{\Delta t_v^2}$$

where $\Delta\theta_S$ = Vertical Scan per point $= \dfrac{\theta_S^V}{(P.R.F.)\,t_v}$

Δt_v = Vertical Scan Time between points $= \dfrac{1}{P.R.F.}$

If $\Delta\theta_S = .028$ radian and $\Delta t_v = \frac{1}{25}$ second, then

$$\alpha_{max} = 70 \text{ rad/sec}^2$$

This is a high acceleration and may be difficult (but not impossible) to achieve. If necessary, the 1/2 km resolution would have to be increased; a 1 km resolution would require about 17 rad/sec^2 accelerations and is a much more reasonable value.

Scanner concept #2 is similar to #1 above except that the fusalage would have to be cut and a 12 inch wedge used. Although this scanner could work, the cost of the aircraft modifications, the very large wedge and high torque requirement might make it impractical.

Scanner concept #3 is the same as #2, except that the unit is located in the cargo hold (see Figure 5-6) which makes it hard to service in flight.

Scanner concept #4 is a 2-axis mirror scanner located in the forward cargo hold. This concept requires that the scanner be located in an unpressurized area, possibly with some type of aerodynamic turret.

Concept #5 is a Coudé telescope in an alt-azimuth mount with aerodynamic coverings.

Designs #5 and #6 require extensive aircraft modification and large (2 ft.) diameter turrets which may cause problems.

Design #6 (Figure 5-7) utilizes something similar to the CAT system telescope arrangement in conjunction with a 2-D mirror scanner. Since the emergency door can not be used as the beam exit because it is too far aft, a large hole (18") must be cut in the main cabin fuselage near station #470 and the actual scanner will be exposed to the outside environment.

The above designs (#2 - #6) are probably possible, but a thorough design effort is necessary in order to show which are possible and/or practical. Any of the scanners within the aircraft will have few environmental problems. The major considerations would be the shock and vibrations typical of an aircraft environment, and possibly, window heater requirements.

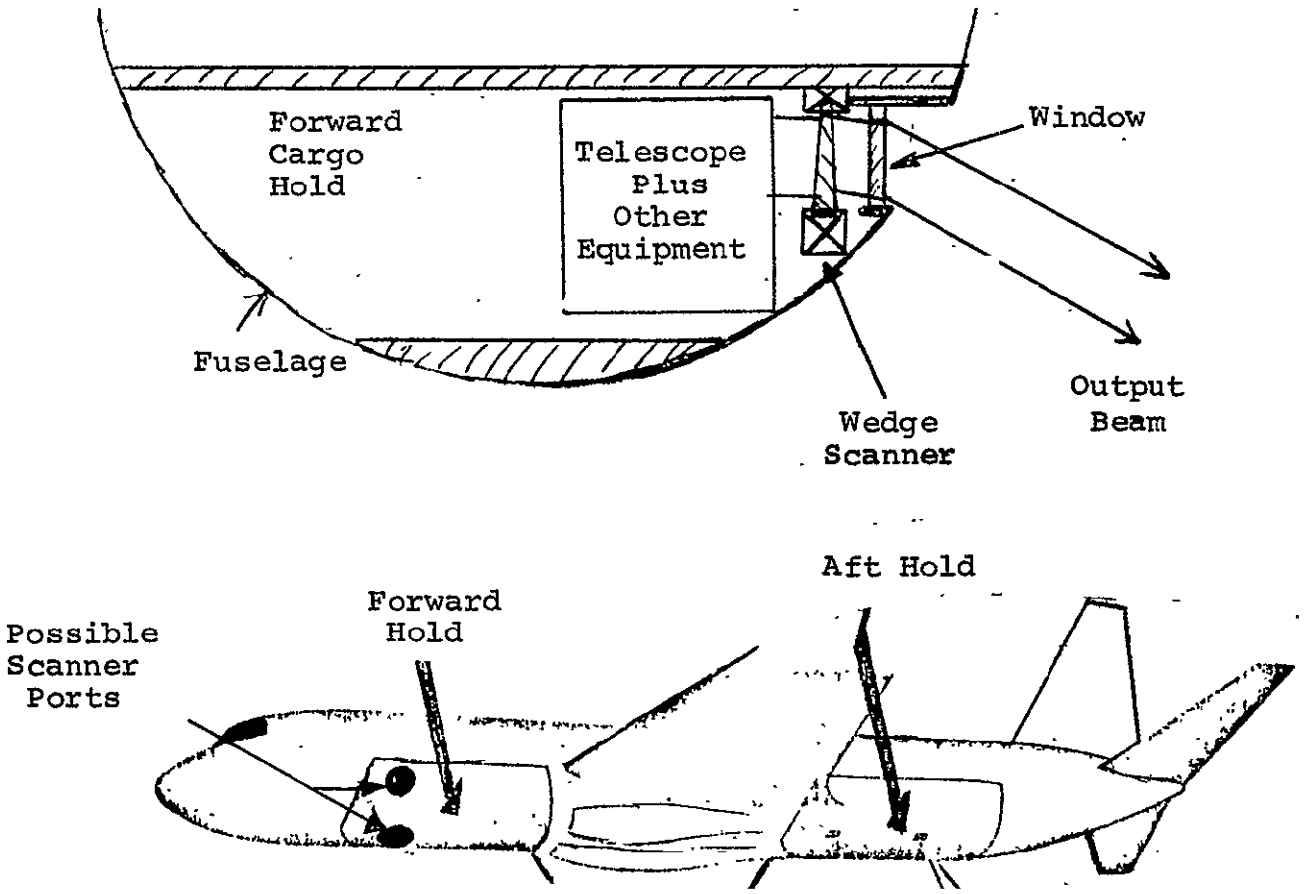

Figure 5-6. Cargo Hold Scanner Location.

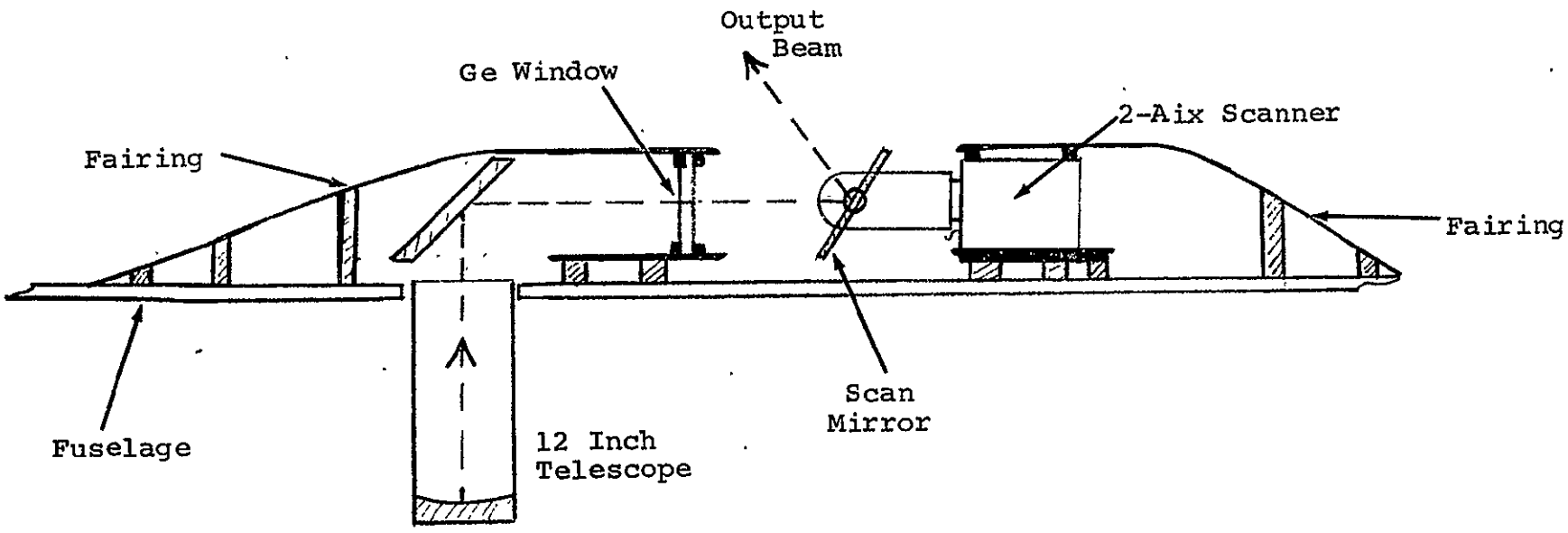

'igure 5-7. 'Pod Mounted 2-Axis Mirror Scanner.

5.4 CONCLUSIONS

A three-dimensional, pulsed LDV located in an aircraft such as the CV-990 appears to be a feasible concept. The major part of the system is the same as the two-dimensional system. Differences are in the data analysis programs and increased memory required to process the data; real time analysis may not be possible. The scanner must provide motion in two axes so that data from a volume can be obtained. The major scanner problems center around the major aircraft modifications necessary to implement the scanner. The use of an 8 inch telescope with a rotating wedge scanner might offer the best compromise solution.

SECTION 6

CONCLUSIONS

The hardware design requirements for a severe storm measurement system have been determined. It has been established that the present CAT system is capable of being modified to make measurements in severe storms. The CAT system, in its present configuration, would have the capability to make limited storm measurements of one dimensional velocity flow fields. It has been shown that with several modifications, the system could be upgraded in several steps to meet the requirements of severe storm measurements. The necessary additional components to make the system viable have been identified as a two dimensional scanner, a processor, and a TEA laser transmitter. The data analysis system required to process the data obtained has been considered, with the result that displays of the velocity flow field would be obtainable in real time with the required coverage and resolution. In addition, it has been indicated that it may be possible to make measurements on a small scale with better resolution to obtain such parameters as divergence, circulation, shear and turbulence. The system has been configured for a Convair 990 aircraft using a modified emergency exit door as a viewing port, and consideration has been given to an evolutionary design starting with the presently existing CAT instrument. It has also been shown that the possibility exists for development of a three dimensional scanning system to provide data from several altitudes within the storm, during a single flyby.

In summary, the evolution of a severe storm measurement system from the present CAT instrument would be as follows. First, a scanner, processor, and data analysis system would be added to permit measurements at limited range, or in favorable atmospheric conditions. Next, a TEA laser transmitter and a new interferometer would be used to extend the range and adverse weather capability. Finally, after resolution of any problems involved with this system, and after

development of suitable data collection and analysis techniques, a three dimensional scanner could be implemented to provide three dimensional velocity flow field information.

SECTION 7

REFERENCES

(1) Thomson, J. A., A. R. Davies, and K. G. P. Snlzmann, "Conceptual Design of an Airborne Laser Doppler Velocim System for Studying Wind Fields Associated with Severe Local Storms", NASA contract report on Contract NAS8-31 Physical Dynamics Inc., Berkley, California, May 1976.

(2) NASA CV-990 Airborne Laboratory Experimentor's Handbook Airborne Science Office, NASA Ames Research Center, Moffet Field, California, April 1975.

(3) Phone conversation with F. Drinkwater, Airborne Science NASA Ames Research Center, Moffet Field, California.

(4) Jelalian, A. V., W. H. Keene, and C. M. Sonnenschein, "Development of CO_2 Laser Doppler Instrumentation for Detection of Clear Air Turbulence", Final Report on Contract NAS8-24742, Raytheon Company, Sudbury, Massach May 1972.