CR-151360

KINEMATIC CAPABILITY IN THE SVDS

Job Order 86-069

(NASA-CR-151360) KINEMATIC CAPABILITY IN THE SVDS (Lockheed Electronics Co.) 51 p HC A04/MF A01 CSCL 05H

N77-23753

Unclas

G3/54 26151

Prepared By

Lockheed Electronics Company, Inc.
Systems and Services Division
Houston, Texas

Contract NAS 9-15200

For

MISSION PLANNING AND ANALYSIS DIVISION

MAY 1977
RECEIVED
NASA STI FACILITY
INPUT BRANCH

National Aeronautics and Space Administration

LYNDON B. JOHNSON SPACE CENTER

Houston, Texas

March 1977

LEC-10246

TECHNICAL REPORT

KINEMATIC CAPABILITY IN THE SVDS

Job Order 86-069

PREPARED BY

H. Flanders

APPROVED BY

J. D. Peticolas, Supervisor
Atmospheric Flight Section

F. N. Barnes, Manager
Dynamic Systems Department

Prepared By

Lockheed Electronics Company, Inc.

For

Mission Planning and Analysis Division

NATIONAL AERONAUTICS AND SPACE ADMINISTRATION
LYNDON B. JOHNSON SPACE CENTER
HOUSTON, TEXAS

March 1977

LEC-10246

TECHNICAL REPORT INDEX/ABSTRACT

(See instructions on reverse side.)

1. TITLE AND SUBTITLE OF DOCUMENT KINEMATIC CAPABILITY IN THE SVDS	2. JSC NO. JSC-12606
3. CONTRACTOR/ORGANIZATION NAME Lockheed Electronics Company, Inc.	4. CONTRACT OR GRANT NO. NAS 9-15200
5. CONTRACTOR/ORIGINATOR DOCUMENT NO. LEC-10246	6. PUBLICATION DATE (THIS ISSUE) March 1977
7. SECURITY CLASSIFICATION Unclassified	8. OPR (OFFICE OF PRIMARY RESPONSIBILITY) Mission Planning and Analysis Division
9. LIMITATIONS GOVERNMENT HAS UNLIMITED RIGHTS [X] YES [ ] NO IF NO, STATE LIMITATIONS AND AUTHORITY	10. AUTHOR(S) H. Flanders
11. DOCUMENT CONTRACT REFERENCES	12. HARDWARE CONFIGURATION
WORK BREAKDOWN STRUCTURE NO. Job Order 86-069	SYSTEM
CONTRACT EXHIBIT NO.	SUBSYSTEM
DRL NO. AND REVISION	MAJOR EQUIPMENT GROUP
DRL LINE ITEM NO.	

13. ABSTRACT

This report documents the details of the Remote Manipulator System (RMS) kinematic model implemented into the Space Vehicle Dynamics Simulation (SVDS). Detailed engineering flow diagrams and definitions of terms are included.

14. SUBJECT TERMS

RMS	SVDS	Kinematics
Resolved Rate Law	Line-of-Sight Steering	Axis-of-Rotation Steering

CONTENTS

Section		Page
1.	INTRODUCTION	1-1
2.	SVDS-RMS KINMAT INTERFACE	2-1
3.	ENGINEERING FLOWCHARTS	3-1
4.	SVDS-RMS KINMAT COMMON VARIABLES AND DEFINITIONS	4-1
5.	REFERENCES	5-1

Appendix		
A	COORDINATE SYSTEMS AND NOTATIONS	A-1
B	RMS ANGLE INITIALIZATION OR COMPUTATION	B-1
C	THE RESOLVED RATE LAW	C-1
D	LINE-OF-SIGHT STEERING AND AXIS-OF-ROTATION STEERING	D-1

FIGURE

Figure Page

1 Overview of SVDS with KINMAT interfaces. 2-2

KINEMATIC CAPABILITY IN SVDS

1. INTRODUCTION

The purpose of this document is to present the details of the Remote Manipulator System (RMS) kinematic capability implemented into the Space Vehicle Dynamics Simulator (SVDS). Section 2 presents a brief overview of the RMS kinematic models as they are interfaced in SVDS. The basic interface shown can also be used for the RMS rigid body models and the flexible body models. Section 3 contains detailed engineering flow diagrams of the RMS KINMAT models. Section 4 contains the definition of the SVDS RMS KINMAT common variables and the user inputs required to execute these options.

Four appendixes have been included. Appendix A contains a description of the coordinate systems used and some notation and basic mathematical relationships. Appendix B presents a development of the equations used to compute joint angles given the position and orientation of the end effector. Appendix C contains a development of the Resolved Rate Law, the relationship between the end effector translational and rotational velocity and the arm joint rates. It is noted that these relationships are transformed to the wrist pitch system so that joint rates can be solved explicitly. This is similar to a development presented in ref. 1. Appendix D presents a development of the equations used in the line-of-sight steering, and axis-of-rotation steering use by the RMS kinematic model.

2. SVDS-RMS KINMAT INTERFACE

The RMS kinematic model implemented into the SVDS program does not interface with the dynamics of the rigid body motion simulated by the SVDS program; however, the commanded arm joints are integrated to determine the current values of the arm angles. Because of the requirement to numerically integrate these variables, it was decided that this integration should be merged with the integration of the rigid body equation of motion.

For this reason, the RMS model was interfaced at three places in the SVDS program: (1) In the integration initialization to set up the additional variables to be integrated, (2) In the integration driver, and (3) In the math model driver to compute RMS steering commands and compute RMS joint positions for interface with future models requiring these computations.

The method of interface that was chosen can easily be followed for future development items such as RMS rigid body and flexible body dynamics. The flowchart following is an overview of the SVDS program structure with the KINMAT interfaces indicated.

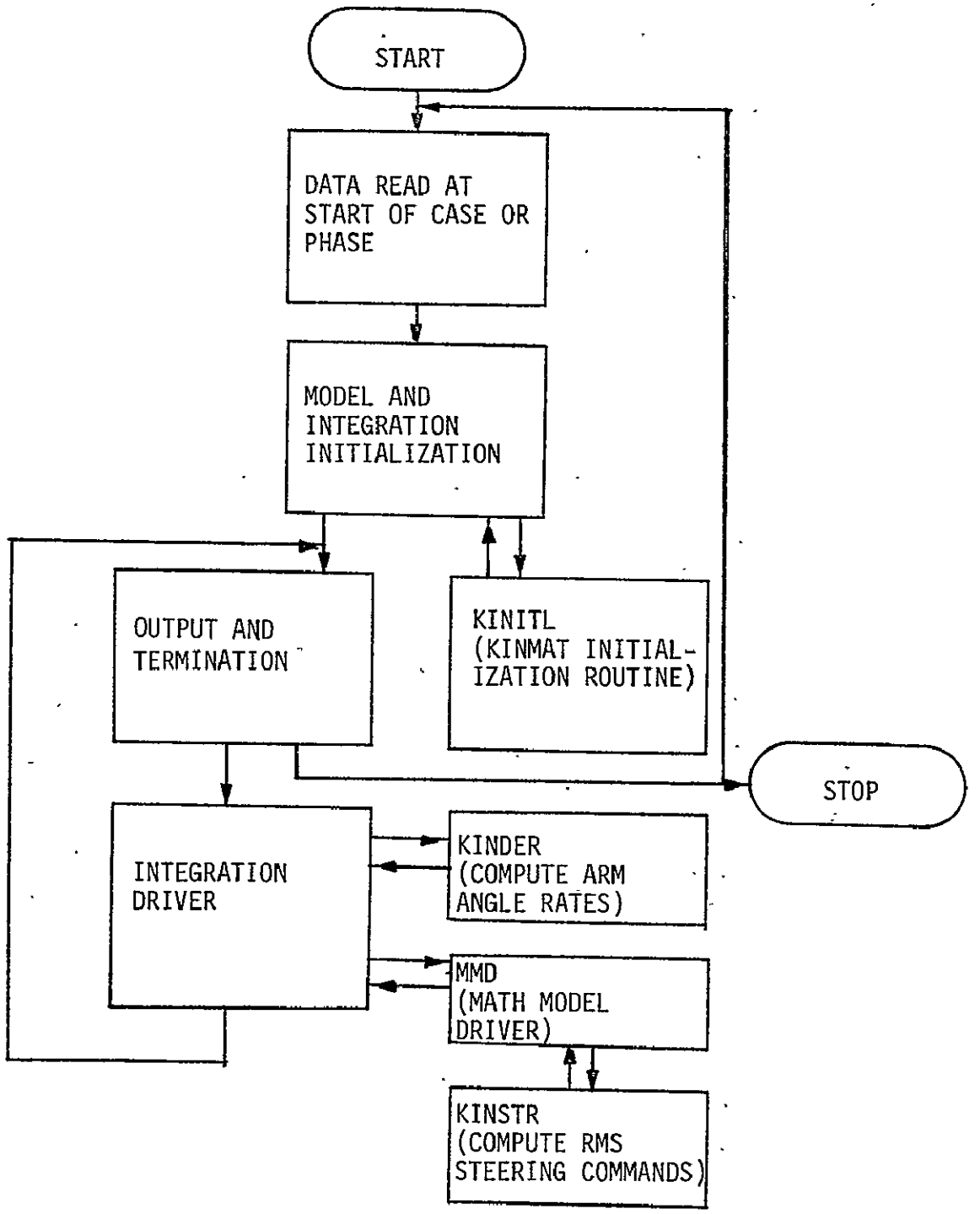

Figure 1.- Overview of SVDS with KINMAT interfaces.

3. ENGINEERING FLOWCHARTS

This section contains flowcharts of the subroutines introduced into SVDS to provide the RMS kinematic capability. These flowcharts use engineering symbols and form the basis for the routines coded into SVDS. The purpose of this section is to provide logic flow in a terminology more familiar to an engineer than FORTRAN code. Definitions of symbols used are included at the end of this section.

SUBROUTINE RMANGS

Subroutine RMANGS computes the RMS joint angle, given the position and orientation of the end effector relative to the orbiter.*

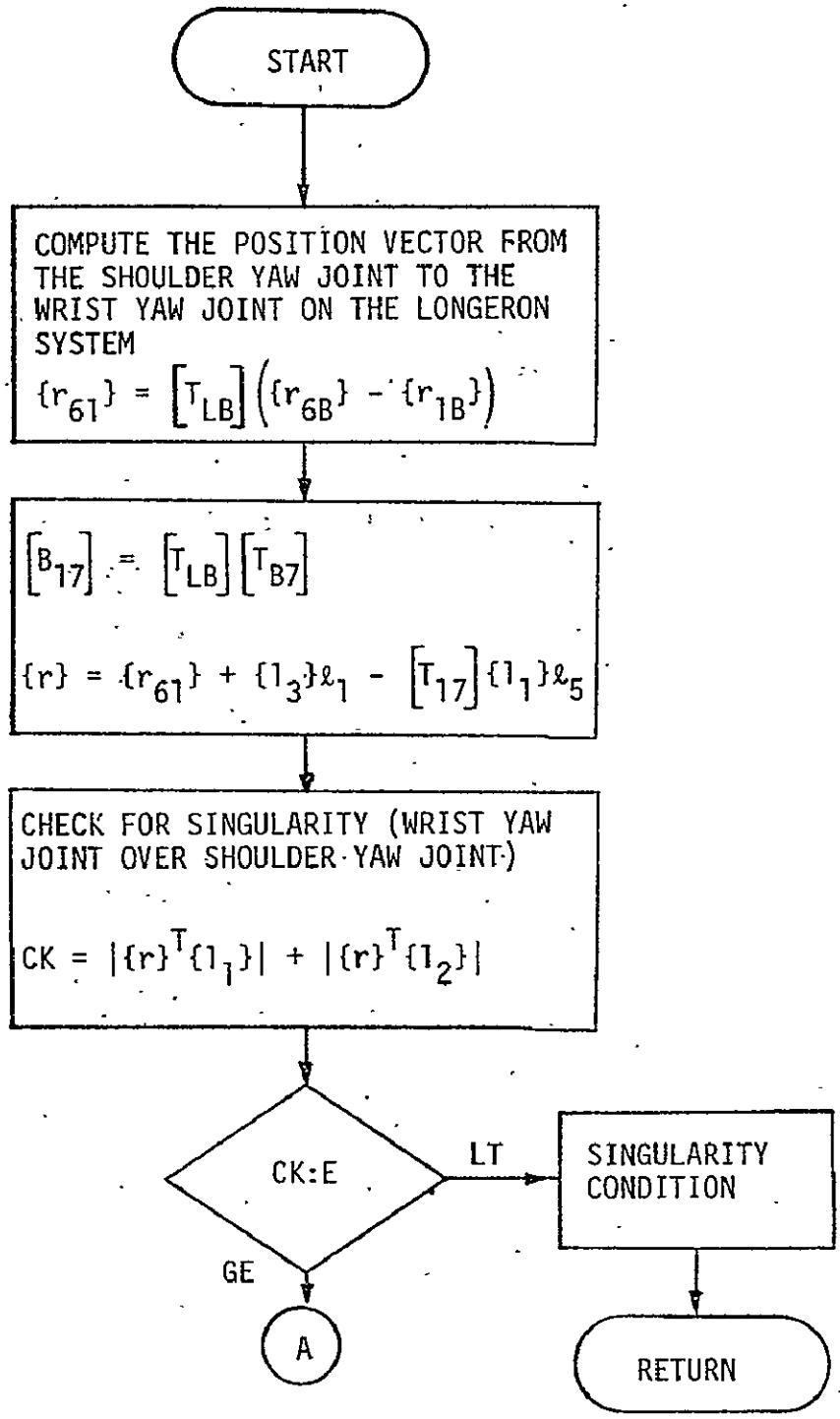

*See Appendix A for a development of the equations used in this routine.

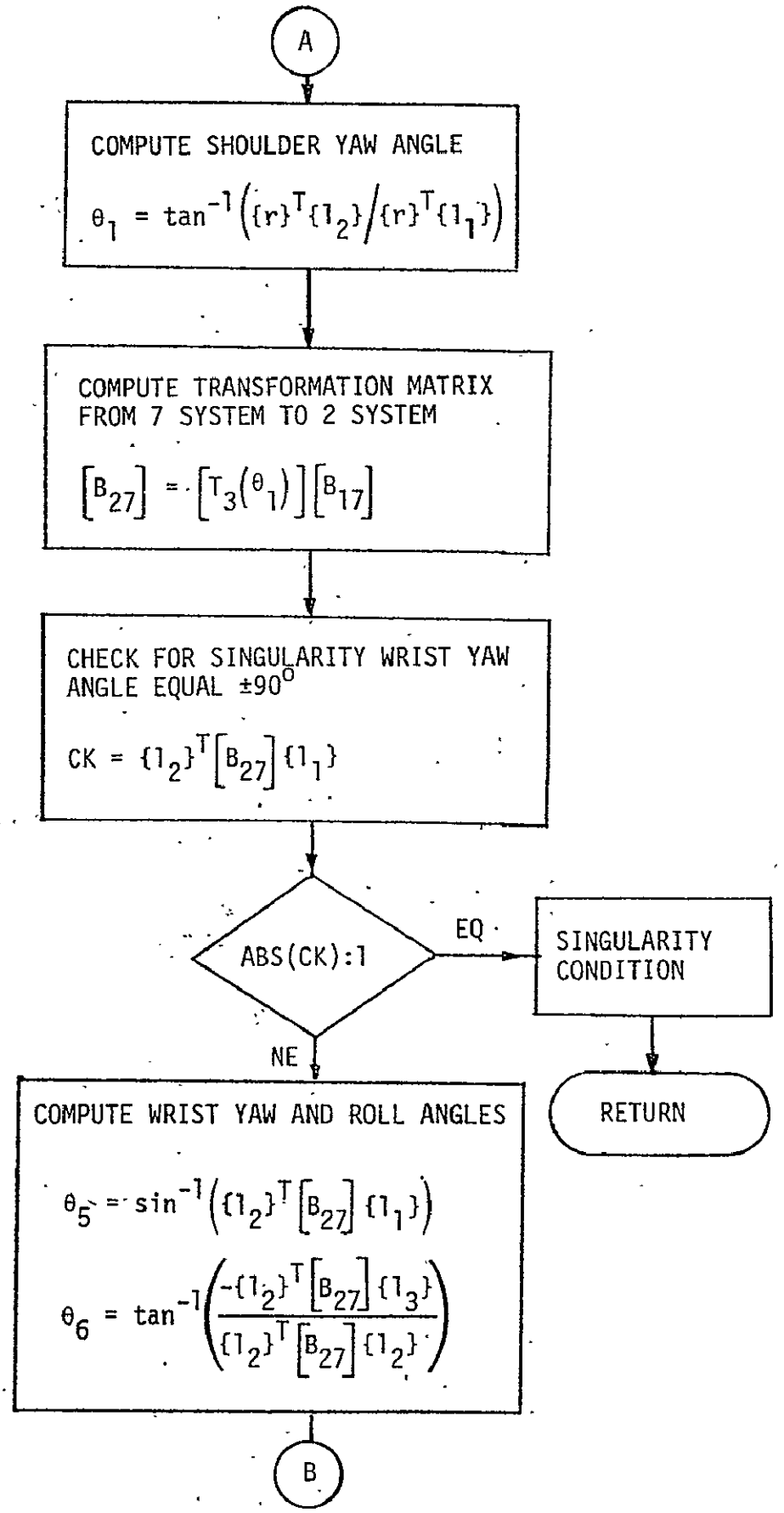
A
COMPUTE SHOULDER YAW ANGLE
$\theta_1 = \tan^{-1}\left(\{r\}^T\{1_2\}/\{r\}^T\{1_1\}\right)$
COMPUTE TRANSFORMATION MATRIX FROM 7 SYSTEM TO 2 SYSTEM
$\left[B_{27}\right] = \left[T_3(\theta_1)\right]\left[B_{17}\right]$
CHECK FOR SINGULARITY WRIST YAW ANGLE EQUAL ±90°
$CK = \{1_2\}^T\left[B_{27}\right]\{1_1\}$
ABS(CK):1
EQ
SINGULARITY CONDITION
RETURN
NE
COMPUTE WRIST YAW AND ROLL ANGLES
$\theta_5 = \sin^{-1}\left(\{1_2\}^T\left[B_{27}\right]\{1_1\}\right)$
$\theta_6 = \tan^{-1}\left(\frac{-\{1_2\}^T\left[B_{27}\right]\{1_3\}}{\{1_2\}^T\left[B_{27}\right]\{1_2\}}\right)$
B

B

COMPUTE ELBOW, SHOULDER, AND WRIST PITCH ANGLES

$$\beta = \tan^{-1}\left(\frac{-\{l_3\}^T\left[B_{27}\right]\{l_1\}}{\{l_1\}^T\left[B_{27}\right]\{l_1\}}\right)$$

$$\alpha = \{l_1\}^T\{r\}\cos\theta_1 + \{l_2\}^T\{r\}\sin\theta_1 - \ell_4\cos\beta$$

$$\gamma = -\{l_3\}^T\{r\} - \ell_4\sin\beta$$

$$CK = \left(\gamma^2 + \alpha^2 - \ell_2^2 - \ell_3^2\right)\Big/\left(2\ell_2\ell_3\right)$$

CK:1.0

GT → ARM CAN'T REACH POSITION GIVEN (ERROR) → RETURN

LE

$$\theta_3 = -\cos^{-1}(CK)$$

$$\theta_2 = \cos^{-1}\left(\frac{\alpha\left(\ell_2 + \ell_3\cos\theta_3\right) + \gamma\ell_3\sin\theta_3}{\ell_2^2 + \ell_3^2 + 2\ell_2\ell_3\cos\theta_3}\right)$$

$$\theta_4 = \beta - \theta_2 - \theta_3$$

RETURN

SUBROUTINE LTRAJ

Subroutine LTRAJ computes a trapezodial time history for the magnitude of the translational velocity, and a unit vector in the direction of the line of sight.

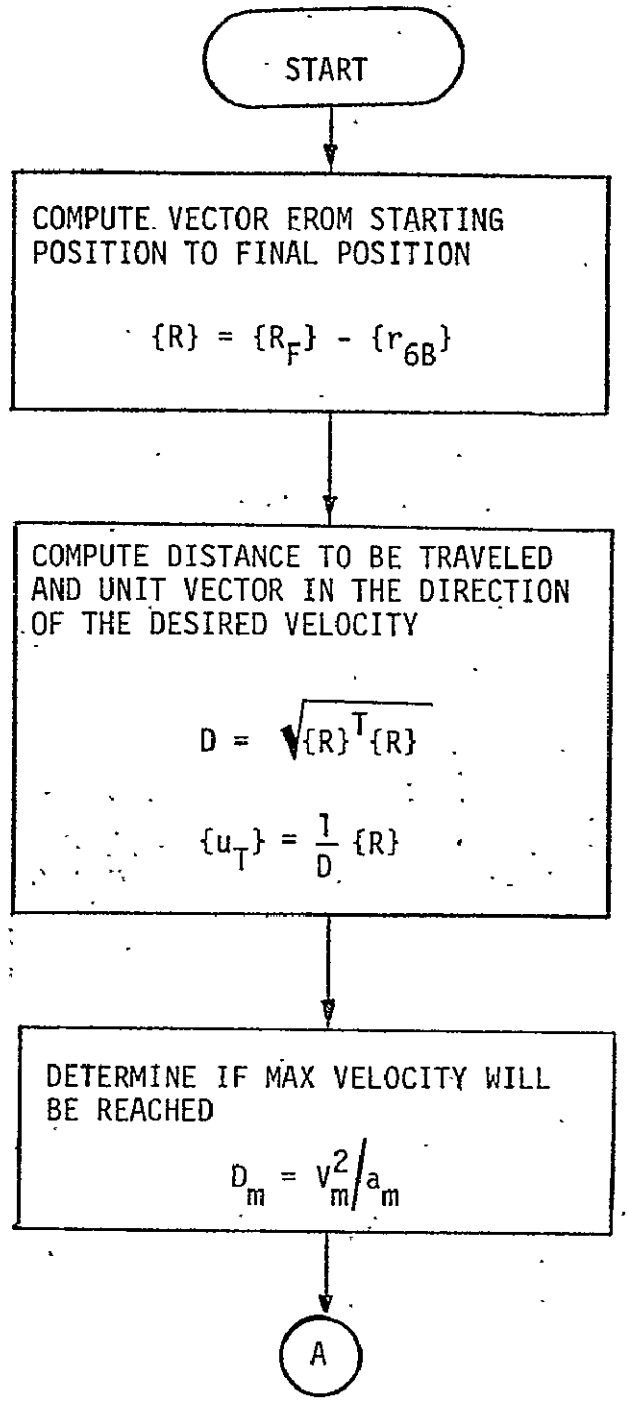

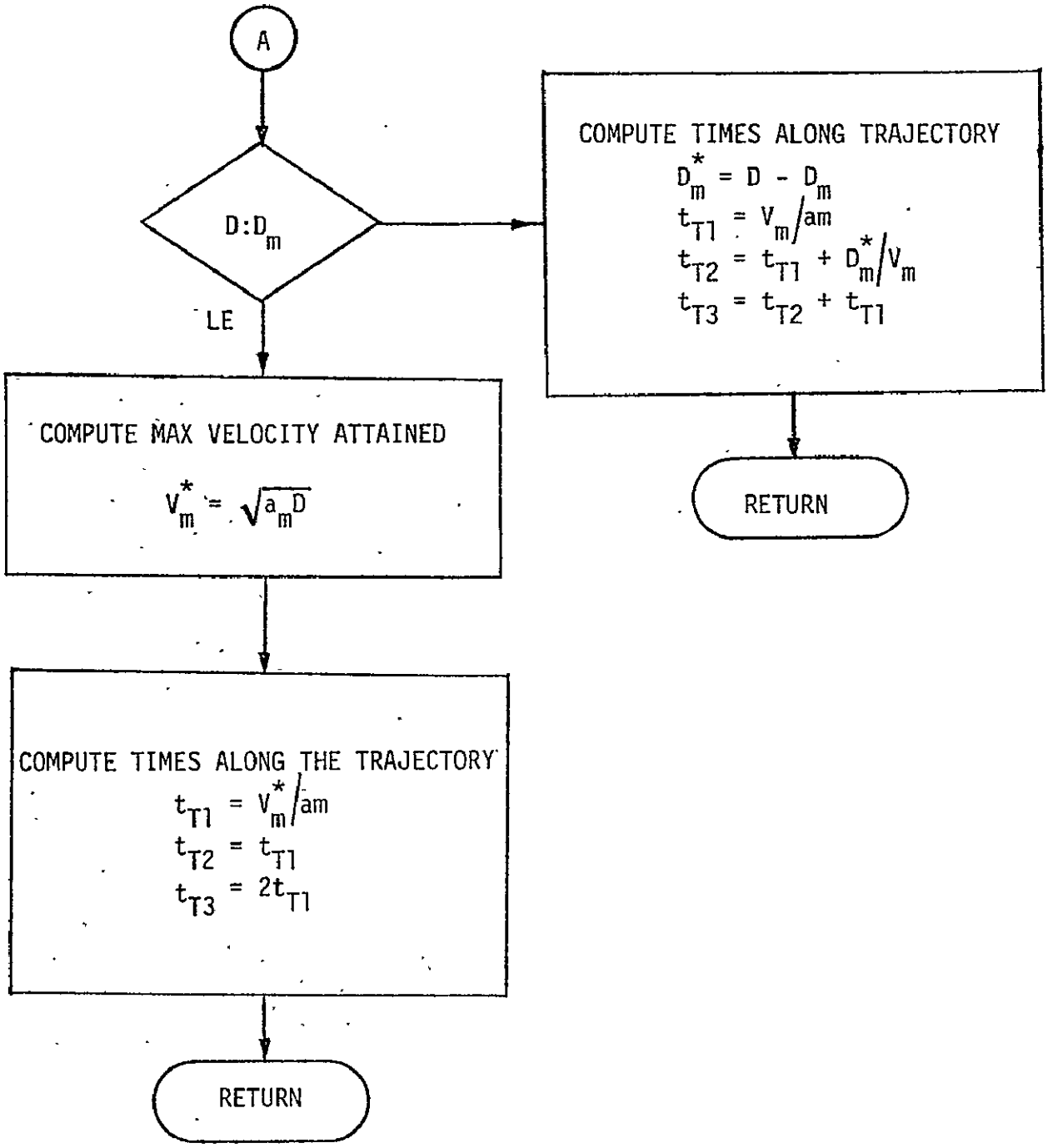
A
D:D_m
LE
COMPUTE TIMES ALONG TRAJECTORY
D*_m = D - D_m
t_T1 = V_m/am
t_T2 = t_T1 + D*_m/V_m
t_T3 = t_T2 + t_T1
RETURN
COMPUTE MAX VELOCITY ATTAINED
V*_m = √(a_m D)
COMPUTE TIMES ALONG THE TRAJECTORY
t_T1 = V*_m/am
t_T2 = t_T1
t_T3 = 2t_T1
RETURN

SUBROUTINE ATRAJ

Subroutine ATRAJ computes a trapezodial time history for the magnitude of the rotational velocity of the end effector, and a unit vector along the single axis of rotation.

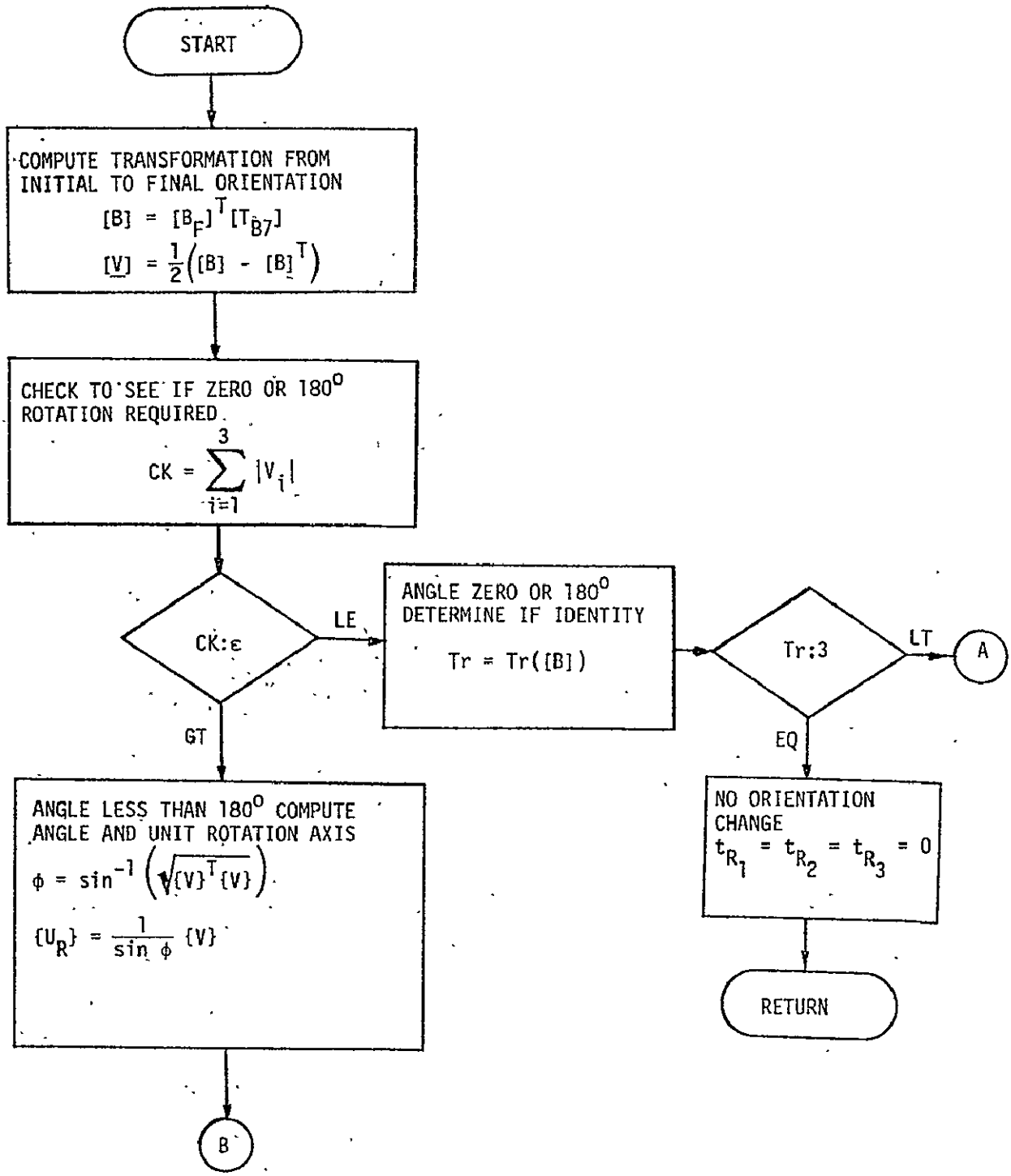

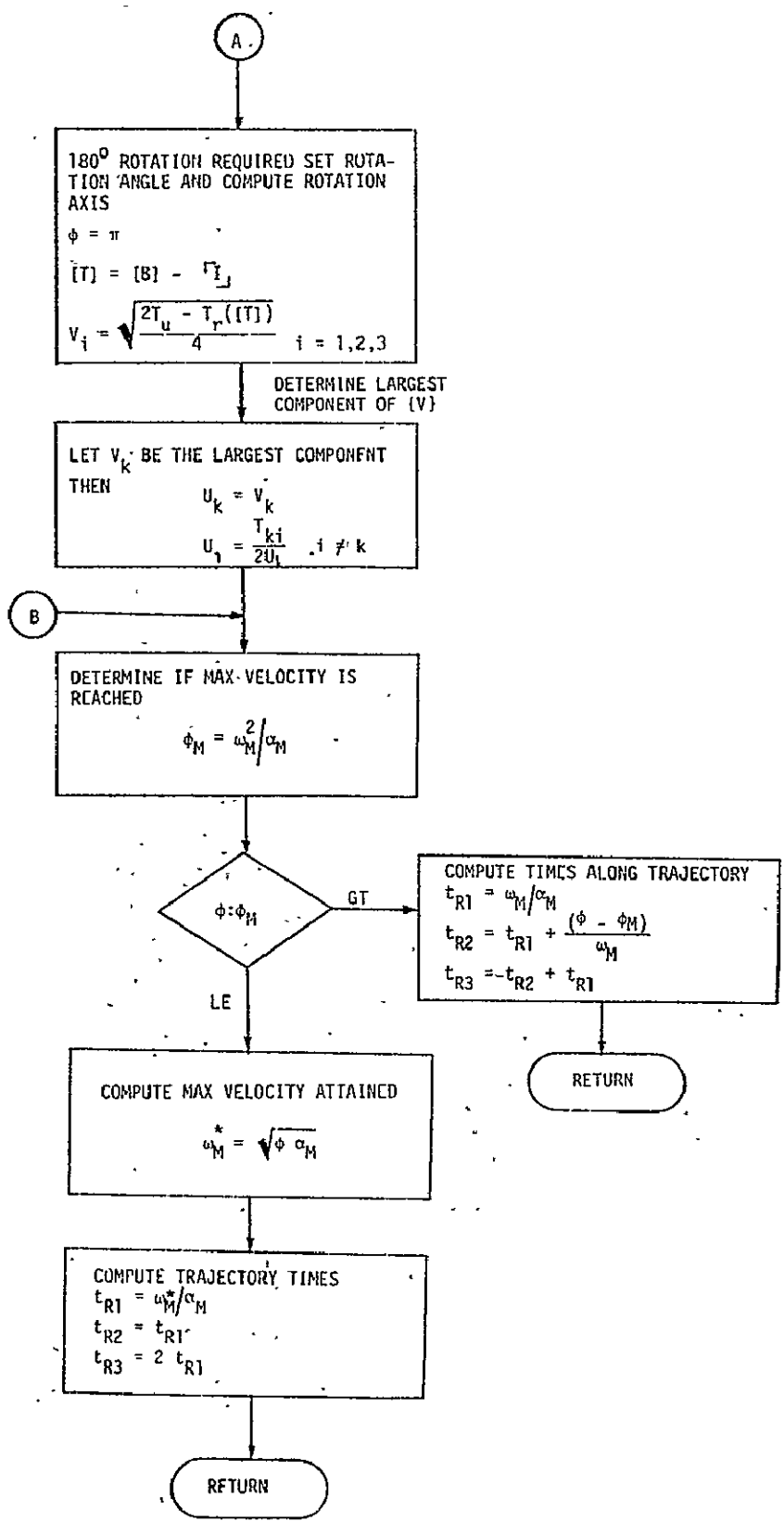

ORIGINAL PAGE IS
OF POOR QUALITY

SUBROUTINE LNKAGE

Subroutine LNKAGE computes RMS joint positions relative to the orbiter, and the orientation (transformation matrices) of these coordinate systems relative to the orbiter.

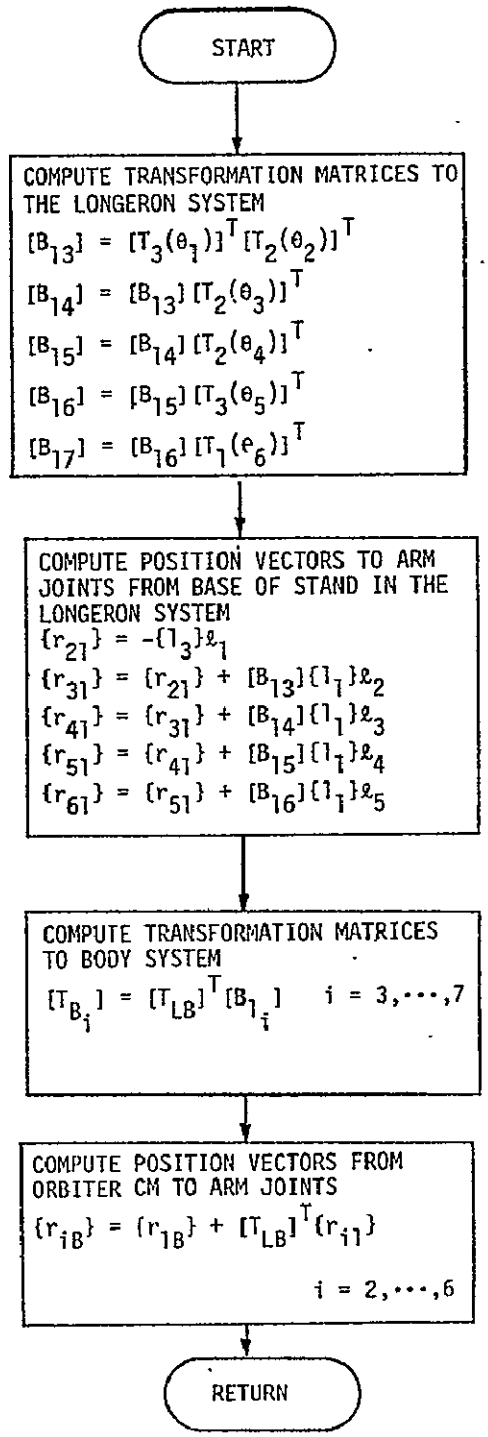

SUBROUTINE KINSTR

Subroutine KINSTR computes the end effector commanded velocity, and angular velocity relative to the orbiter in the orbiter body system.

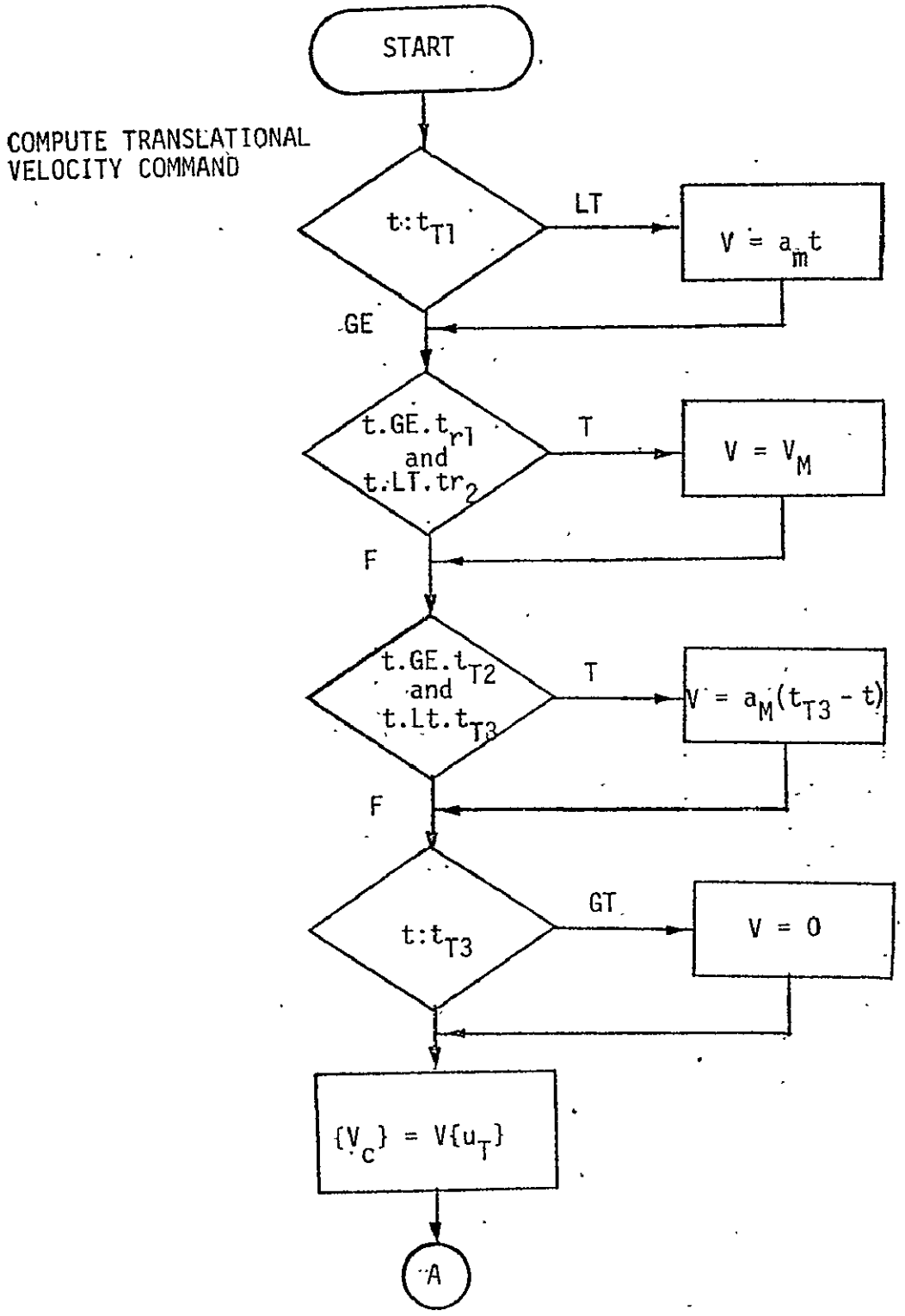

COMPUTE ROTATIONAL VELOCITY COMMAND

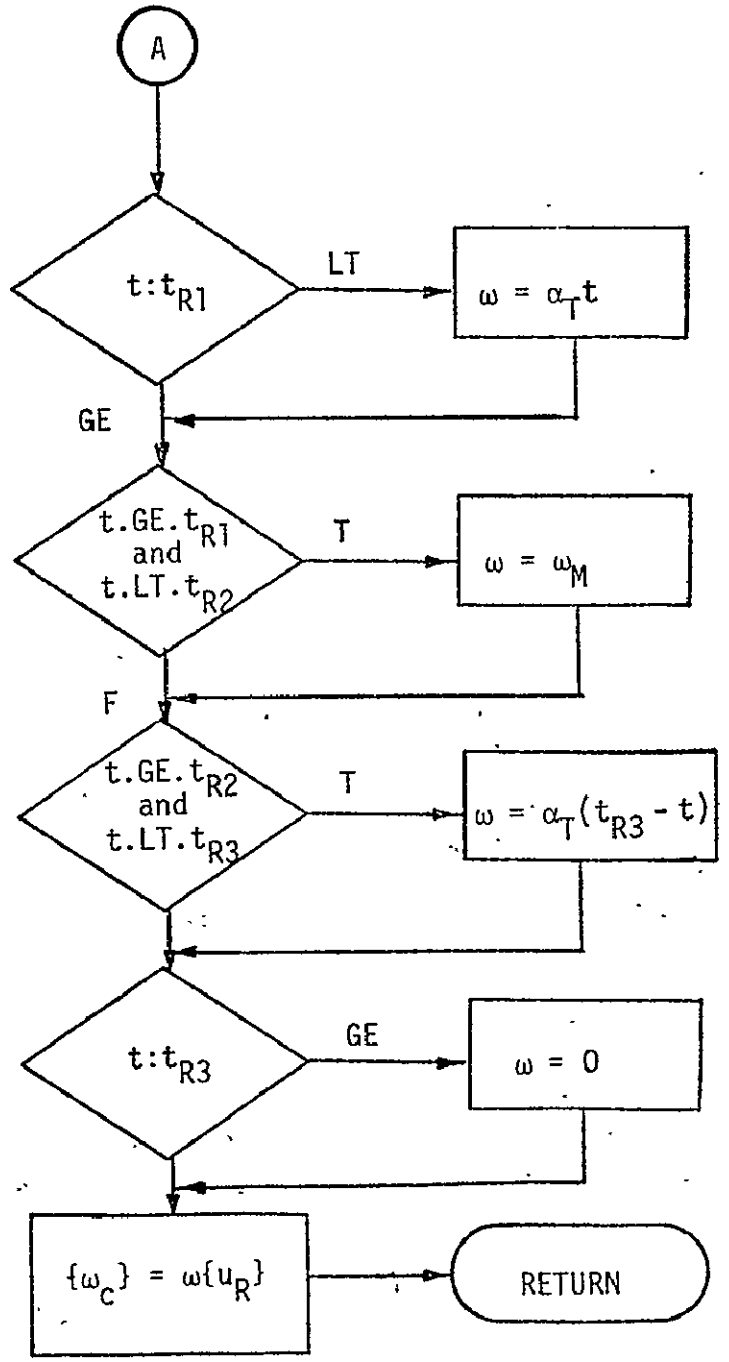

SUBROUTINE KINDER

Subroutine KINDER computes the joint angle rates compatible with the commanded translational and rotation velocity of the end effector using the resolved rate law.

START

TRANSFORM END EFFECTOR VELOCITIES TO WRIST PITCH SYSTEM

$$\{b_1\} = [T_2(\theta_2 + \theta_3 + \theta_4)][T_3(\theta_1)][T_{LB}]\{\omega_c\}$$

$$\{b_2\} = [T_2(\theta_2 + \theta_3 + \theta_4)][T_3(\theta_1)][T_{LB}]\{V_c\}$$

CALCULATE ELEMENTS OF JACOBIAN MATRIX

$a_{11} = -\sin(\theta_2 + \theta_3 + \theta_4)$

$a_{16} = \cos\theta_5$

$a_{26} = \sin\theta_5$

$a_{31} = \cos(\theta_2 + \theta_3 + \theta_4)$

$a_{41} = -\ell_5 \cos(\theta_2 + \theta_3 + \theta_4)\sin\theta_5$

$a_{51} = (\ell_2 \cos\theta_2 + \ell_3 \cos(\theta_2 + \theta_3) + (\ell_4 + \theta_5 \cos\theta_5)(\cos(\theta_2 + \theta_3 + \theta_4))$

$a_{61} = -\ell_5 \sin(\theta_2 + \theta_3 + \theta_4)\sin\theta_5$

$a_{42} = \ell_2 \sin(\theta_3 + \theta_4) + \ell_3 \sin\theta_4$

$a_{62} = -\ell_2 \cos(\theta_3 + \theta_4) - \ell_3 \cos\theta_4 - \ell_5 \cos\theta_5 - \ell_4$

$a_{43} = \ell_3 \sin\theta_4$

$a_{63} = -\ell_4 - \ell_5 \cos\theta_5 - \ell_3 \cos\theta_4$

$a_{64} = -(\ell_4 + \ell_5 \cos\theta_5)$

$a_{45} = -\ell_5 \sin\theta_5$

$a_{55} = \ell_5 \cos\theta_5$

A

A

SOLVE FOR JOINT RATES

$$\begin{bmatrix} \dot{\theta}_1 \\ \dot{\theta}_5 \end{bmatrix} = \frac{1}{a_{31}a_{55} - a_{51}} \begin{bmatrix} a_{55} & -1 \\ -a_{51} & a_{31} \end{bmatrix} \begin{bmatrix} b_3 \\ b_5 \end{bmatrix}$$

$$\dot{\theta}_6 = \frac{1}{a_{16}} (b_1 - a_{11}\dot{\theta}_1)$$

$$\begin{bmatrix} \dot{\theta}_2 \\ \dot{\theta}_3 \\ \dot{\theta}_4 \end{bmatrix} = \frac{1}{a_{43}(a_{64} - a_{62}) - a_{42}(a_{64} - a_{63})} \begin{bmatrix} a_{43}a_{64} & a_{63} - a_{64} & -a_{43} \\ -a_{42}a_{61} & a_{64} - a_{62} & a_{42} \\ a_{42}a_{63} - a_{62}a_{43} & a_{62} - a_{63} & a_{43} - a_{42} \end{bmatrix} \begin{bmatrix} b_2 - a_{26}\dot{\theta}_6 \\ b_4 - a_{41}\dot{\theta}_1 - a_{45}\dot{\theta}_5 \\ b_6 - a_{61}\dot{\theta}_1 \end{bmatrix}$$

RETURN

ORIGINAL PAGE IS
OF POOR QUALITY

DEFINITIONS OF SYMBOLS

a_m	Maximum translational acceleration of the end effector relative to the orbiter
a_{ij}	Coefficients of the Jacobian used in the resolved rate law
$[B]$	Transformation matrix from initial orientation of the end effector to the final
$[B_F]$	Transformation matrix from final desired end effector orientation to orbiter body system
$\{b_1\}$	Column matrix of the commanded end effector angular velocity relative to the orbiter expressed in the wrist pitch system
$\{b_2\}$	Column matrix of the components of the commanded end effector translational velocity relative to the orbiter expressed in the wrist pitch system
$[B_{13}]$	Transformation matrix from the upper arm system to the longeron system
$[B_{14}]$	Transformation matrix from the lower arm system to the longeron system
$[B_{15}]$	Transformation matrix from the wrist pitch system to the longeron system
$[B_{16}]$	Transformation matrix from the wrist yaw system to the longeron system
$[B_{17}]$	Transformation matrix from the end effector system to the longeron system
$[B_{27}]$	Transformation matrix from the end effector system to the shoulder yaw system
D	Distance from initial position of end effector to final desired position of the end effector
D_m	Twice distance traveled by end effector during time to reach maximum velocity accelerating at maximum acceleration

D_m^*	Difference between D and D_m
$\ulcorner I \lrcorner$	Identity matrix
ℓ_1	Distance from RMS orbiter attach point to shoulder pitch pivot point
ℓ_2	Length of lower arm
ℓ_3	Length of upper arm
ℓ_4	Distance from wrist pitch joint to wrist yaw joint
ℓ_5	Distance from wrist yaw joint to tip of end effector
$\{R\}$	Column matrix of the component of position vector from initial position to final desired position expressed in the orbiter body system
$\{r\}$	Column matrix of the components of position vector from shoulder pitch joint to wrist yaw joint expressed in the longeron system
$\{R_F\}$	Column matrix of the components of the position vector from the center of mass (CM) of the orbiter to the final desired position of the tip of the end effector expressed in the orbiter body system
$\{r_{1B}\}$	Column matrix of the components of the position vector from the CM of the orbiter to the RMS attach point in the orbiter body system
$\{r_{2B}\}$	Column matrix of the components of the position vector from the CM of the orbiter to the shoulder pitch joint in the orbiter body system
$\{r_{3B}\}$	Column matrix of the components of the position vector from the CM of the orbiter to the elbow pitch joint in the orbiter body system
$\{r_{4B}\}$	Column matrix of the components of the position vector from the CM of the orbiter to the wrist pitch joint in the orbiter body system

$\{r_{5B}\}$ Column matrix of the components of the position vector from the CM of the orbiter to the yaw wrist joint in the orbiter body system

$\{r_{6B}\}$ Column matrix of the components of the position vector from the CM of the orbiter to the tip of the end effector in the orbiter body system

$\{r_{2l}\}$ Column matrix of the components of the position vector from the RMS orbiter attach point to the shoulder pitch joint in the longeron system

$\{r_{3l}\}$ Column matrix of the components of the position vector from the RMS orbiter attach point to the elbow pitch joint in the longeron system

$\{r_{4l}\}$ Column matrix of the components of the position vector from the RMS orbiter attach point to the wrist pitch joint in the longeron system

$\{r_{5l}\}$ Column matrix of the components of the position vector from the RMS orbiter attach point to the wrist yaw joint in the longeron system

$\{r_{6l}\}$ Column matrix of the components of the position vector from the RMS orbiter attach point to the tip of the end effector in the longeron system

$[T_{LB}]$ Transformation matrix from the orbiter body system to the longeron system

$[T_{B3}]$ Transformation matrix from the lower arm system to the orbiter body system

$[T_{B4}]$ Transformation matrix from the upper arm system to the orbiter body system

$[T_{B5}]$ Transformation matrix from the wrist pitch system to the orbiter body system

$[T_{B6}]$ Transformation matrix from the wrist yaw system to the orbiter body system

$[T_{B7}]$ Transformation matrix from the end effector system to the orbiter body system

t_{R1}	Time when max angular velocity is attained
t_{R2}	Time of start of angular velocity deceleration phase
t_{R3}	Time of end of end effector rotational maneuver
t_{T1}	Time when max velocity of end effector is attained
t_{T2}	Time of start of end effector deceleration phase
t_{T3}	Time of end of end effector translational maneuver
$[T_1(\theta)]$	Transformation matrix representing a θ rotation about the 1-axis
$[T_2(\theta)]$	Transformation matrix representing a θ rotation about the 2-axis
$[T_3(\theta)]$	Transformation matrix representing a θ rotation about the 3-axis
$\{u_R\}$	Column matrix representing the unit axis of rotation vector
$\{u_T\}$	Column matrix representing the unit vector along the line of sight
V	Magnitude of the translational velocity command
$\{V\}$	Column matrix representing a vector in the direction of the single-axis of rotation vector
$\{V_c\}$	Column matrix of the components of the commanded velocity vector expressed in the orbiter body system
V_m	Magnitude of the maximum allowable translational velocity of the end effector relative to the orbiter
Y_m^*	Magnitude of the maximum translational velocity attained for the end effector relative to the orbiter
α	Parameter used in arm angle initialization computations
α_m	Magnitude of the maximum allowable angular acceleration of the end effector relative to the orbiter
β	Parameter used in arm angle initialization computations
γ	Parameter used in arm angle initialization computations

θ_1	Shoulder yaw angle
θ_2	Shoulder pitch angle
θ_3	Elbow pitch angle
θ_4	Wrist pitch angle
θ_5	Wrist yaw angle
θ_6	Hand roll angle
$\dot{\theta}_1$	Shoulder yaw angle rate
$\dot{\theta}_2$	Shoulder pitch angle rate
$\dot{\theta}_3$	Elbow pitch angle rate
$\dot{\theta}_4$	Wrist pitch angle rate
$\dot{\theta}_5$	Wrist yaw angle rate
$\dot{\theta}_6$	Hand roll angle rate
ϕ	Rotation angle from initial orientation of end effector to final desired orientation
ϕ_M	Twice the angular distance traveled in acceleration from zero angular rate to max angular rate at max angular acceleration
ω	Magnitude of commanded angular velocity of end effector relative to orbiter
$\{\omega_c\}$	Column matrix of the components of the commanded angular velocity vector for the end effector relative to the orbiter
ω_M	Magnitude of the maximum allowable angular velocity of the end effector
ω_m^*	Magnitude of the maximum angular velocity attained for the end effector
$\{1_i\}$	Column matrix with ith component equal 1 and all other components zero

4. SVDS-RMS KINMAT COMMON VARIABLES AND DEFINITIONS

This section contains a list of the SVDS-RMS KINMAT common variables and their definitions. Input variables are listed at the end of this section.

Variable	Definition
IRMS	RMS angle initialization flag =0 Compute RMS angles from position and orientation input data
IRMSTR	RMS steering option flag =0 Table lookup of joint rate commands used =1 Compute line-of-sight and axis-of-rotation steering =2 Line-of-sight and axis-of-rotation steering has been initialized
RMANGD	(1) Shoulder yaw angle rate (2) Shoulder pitch angle rate (3) Elbow pitch angle rate (4) Wrist pitch angle rate (5) Wrist yaw angle rate (6) Hand roll angle rate
RMSAMR	Magnitude of maximum allowable angular acceleration of end effector relative to orbiter
RMSAMT	Magnitude of the maximum allowable end effector translational acceleration relative to the orbiter
RMSANG	RMS joint angles (1) Shoulder yaw angle (2) Shoulder pitch angle (3) Elbow pitch angle (4) Wrist pitch angle (5) Wrist yaw angle (6) Hand roll angle
RMSB13	Transformation matrix from the upper arm system to the longeron system

Variable	Definition
RMSB14	Transformation matrix from lower arm system to the longeron system
RMSB15	Transformation matrix from the wrist pitch system to the longeron system
RMSB16	Transformation matrix from the wrist yaw system to the longeron system
RMSB17	Transformation matrix from the arm end effector system to the longeron system
RMSLTH	Arm member lengths (1) Length from RMS orbiter attach point to shoulder pitch joint (2) Length from shoulder pitch joint to elbow pitch joint (3) Length from elbow pitch joint to wrist pitch joint (4) Length from wrist pitch joint to wrist yaw joint (5) Length from wrist yaw joint to tip of end effector
RMSRC	Dependent variable in commanded arm angle rates table lookups
RMSRF	Position vector from the orbiter CM to the final desired position of the tip of the end effector in the orbiter body system
RMSR1B	Position vector from the orbiter CM to the RMS attach point in the orbiter body system
RMSR2B	Position vector from the orbiter CM to the shoulder pitch joint in the orbiter body system
RMSR3B	Position vector from the orbiter CM to the elbow pitch joint in the orbiter body system
RMSR4B	Position vector from the orbiter CM to the wrist pitch joint in the orbiter body system
RMSR5B	Position vector from the orbiter CM to the wrist yaw joint in the orbiter body system

Variable	Definition
RMSR6B	Position vector from the orbiter CM to the tip of the end effector in the orbiter body system
RMSR21	Position vector from the RMS orbiter attach point to the shoulder pitch joint in the longeron system
RMSR31	Position vector from the RMS orbiter attach point to the elbow pitch joint in the longeron system
RMSR41	Position vector from the RMS orbiter attach point to the wrist pitch joint in the longeron system
RMSR51	Position vector from the RMS orbiter attach point to the wrist yaw joint in the longeron system
RMSR61	Position vector from the RMS orbiter attach point to the tip of the end effector in the longeron system
RMSTBF	Transformation matrix from the final desired orientation of the end effector to the orbiter body system
RMSTB3	Transformation matrix from the upper arm system to the orbiter body system
RMSTB4	Transformation matrix from the lower arm system to the orbiter body system
RMSTB5	Transformation matrix from the wrist pitch system to the orbiter body system
RMSTB6	Transformation matrix from the wrist yaw system to the orbiter body system
RMSTB7	Transformation matrix from the arm end effector system to the orbiter body system
RMSTLB	Transformation matrix from the orbiter body system to the longeron system
RMSTR1	Time relative to RMSTS of the end of the angular acceleration phase of axis-of-rotation steering

Variable	Definition
RMSTR2	Time relative to RMSTS of the end of the angular rate coast phase of axis-of-rotation steering
RMSTR3	Time relative to RMSTS of the end of the axis-of-rotation steering maneuver
RMSTS	Time of the start of the line-of-sight and axis-of-rotation steering maneuvers
RMSTT1	Time relative to RMSTS of the end of the translational acceleration phase of the line-of-sight steering
RMSTT2	Time relative to RMSTS of the end of the translational coast phase of the line-of-sight steering
RMSTT3	Time relative to RMSTS of the end of the line-of-sight steering maneuver
RMSUR	Unit vector defining the axis of rotation from the initial orientation of the end effector to the final orientation of the end effector.
RMSUT	Unit vector along the line-of-sight from the initial end effector position to the final end effector position in the orbiter body system
RMSVC	End effector translational velocity command in the orbiter body system
RMSVMR	Magnitude of maximum allowable angular velocity of the end effector relative to the orbiter
RMSVMT	Magnitude of maximum allowable translational velocity of the end effector relative to the orbiter
RMSWC	End effector angular velocity command in the orbiter body system
RMVMRS	Magnitude of maximum angular velocity attained for the end effector relative to the orbiter
RMVMTS	Magnitude of the maximum translational velocity attained for the end effector relative to the orbiter.

Variable	Definition
TRMS	Current time relative to RMSTS used for line-of-sight and axis-of-rotation steering

SVDS INPUTS FOR RMS KINMAT OPTION

IRMS

=0 RMSB17 and RMSRB6 (ft) required

≠0 RMSANG must be input

IRMSTR

=3 Tables $TARAT_i$ i=1,6 must be input for commanded joint rates

=1 RMSAMR, (deg/sec^2), RMSAMT (ft/sec^2), RMSRF (ft), RMSTBF, RMSYMR (deg/sec), RMSVMT (ft/sec) required.

Other required inputs:

RMSLTH(ft), RMSRIB(ft), RMSTLB

TABLE INPUTS

The tables

$TARAT_i$ i=1,6 must use RMSRC as their dependent variable and RMS as their independent variable.

5. REFERENCES

1. Ravindran, R., and Nquyen, P.: Kinematics and Control of Shuttle Remote Manipulator, SPAR TM-1209, Issue A, (Preliminary) May 1976.

2. Copeland E.: Analytic Description of Subprogram "INITIAL" Added to the RMS Computer Program, LEC-7465, Aug. 1975.

3. JSC/LEC Task Description, Payload Deployment and Retrieval Systems Simulation Development Support, Oct. 1976.

4. JSC/LEC Task Agreement TA-1, Payload Deployment and Retrieval Systems Simulation Development Support, Oct. 1976.

APPENDIX A

COORDINATE SYSTEMS AND NOTATIONS

The purpose of this appendix is to present the definitions of the coordinate systems used in the RMS kinematic model implemented into the SVDS program. This appendix is concerned only with right-handed unit orthonormal systems. The transformation matrix from any one coordinate system to any other coordinate system is a 3 × 3 orthogonal matrix with its determinant equal to +1.

EULER ROTATIONS

The notation $\{1_i\}$ i=1,2,3 is used to denote the components of a unit vector:

$$\{1_1\}^T = [1,\ 0,\ 0]$$
$$\{1_2\}^T = [0,\ 1,\ 0] \qquad \text{(A-1)}$$
$$\{1_3\}^T = [0,\ 0,\ 1]$$

The notation of a bar under the symbol for a column matrix denotes the 3 × 3 skew symmetric cross product matrix.

If

$$\{A\}^T = [a_1 \quad a_2 \quad a_3] \qquad \text{(A-2)}$$

then

$$[\underline{A}] = \begin{bmatrix} 0 & -a_3 & a_2 \\ a_3 & 0 & -a_1 \\ -a_2 & a_1 & 0 \end{bmatrix} \qquad \text{(A-3)}$$

Using this notation, it can be shown that the orthogonal matrix corresponding to a rotation through an angle θ about a unit vector $\overline{u}$ whose components are {u} can be written as

$$[B] = \left(\mathrm{I} - \sin\theta\ [\underline{u}] + (1 - \cos\theta)[\underline{u}]^2\right) \qquad \text{(A-4)}$$

So that if $\{V_A\}$ is the representation of a vector in the A system and $\{V_B\}$ is the representation of the same vector in the B system, and the B system is obtained by rotating the A system through an angle θ about $\bar{u}$, then

$$\{V_B\} = [B]\{V_A\} \tag{A-5}$$

where [B] is defined by eq. (A-4). In developing the relationships obtained by rotating coordinate systems about various coordinate axes, it becomes convenient to define the following transformations which are sometimes called Euler rotations.

$$[T_i(\theta)] = \left([I] - \sin\theta\,[\underline{l}_i] + (1 - \cos\theta)[\underline{l}_i]^2\right) \tag{A-6}$$

Writing these transformations out explicitly:

$$[T_1(\theta)] = \begin{bmatrix} 1 & 0 & 0 \\ 0 & \cos\theta & \sin\theta \\ 0 & -\sin\theta & \cos\theta \end{bmatrix}$$

$$[T_2(\theta)] = \begin{bmatrix} \cos\theta & 0 & -\sin\theta \\ 0 & 1 & 0 \\ \sin\theta & 0 & \cos\theta \end{bmatrix} \tag{A-7}$$

$$[T_3(\theta)] = \begin{bmatrix} \cos\theta & \sin\theta & 0 \\ -\sin\theta & \cos\theta & 0 \\ 0 & 0 & 1 \end{bmatrix}$$

A definition of the coordinate systems used in the RMS kinematics follows.

COORDINATE SYSTEMS

The orbiter body coordinate system is a standard airplane system with the x-axis or 1-axis defined as positive forward, the y-axis or 2-axis is defined

as positive out the right wing, and the z-axis or 3-axis is positive down, as shown in the figure below.

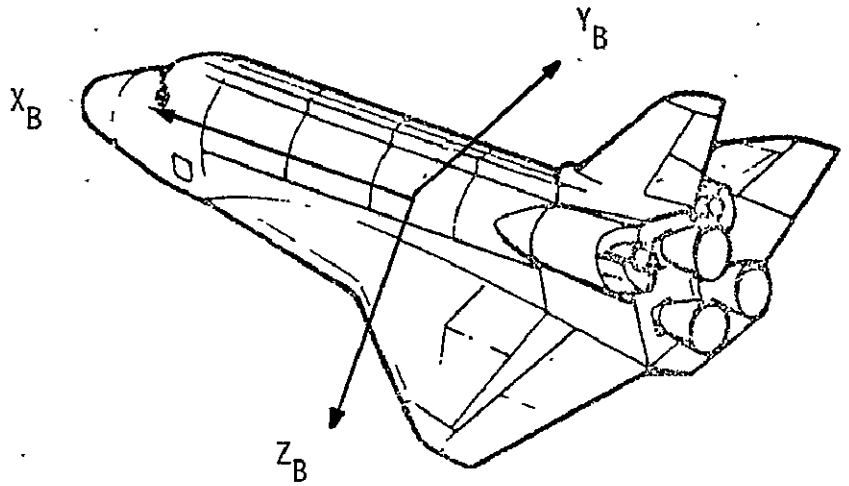

System 1 is the longeron system, which is fixed in the longeron supporting the arm. The x-axis or 1-axis is positive aft, the z-axis is downward and perpendicular to the longeron, and the y-axis is to the left, completing the right-hand system. This system is rolled outboard through an angle ϕ during RMS deployment activity. The transformation matrix from the body system to the longeron system can be written as

$$[T_{LB}] = [T_1(\phi)] \begin{bmatrix} -1 & 0 & 0 \\ 0 & -1 & 0 \\ 0 & 0 & 1 \end{bmatrix} \tag{A-8}$$

System 2 is fixed in the upper arm and is obtained from the longeron system by first yawing through the shoulder yaw angle and the pitching through the shoulder pitch angle. The transformation matrix from system 1 to system 2 can be written as

$$[T_{21}] = [T_2(\theta_2)][T_3(\theta_1)] \tag{A-9}$$

System 3 is fixed in the lower arm, and is obtained by rotating about the 2-axis through the elbow pitch angle, θ_3. The transformation from system 2 to system 3 can be written as:

$$[T_{32}] = [T_2(\theta_3)] \tag{A-10}$$

System 4 is obtained by rotating system 3 about the z-axis through θ_4, the wrist pitch angle. The transformation from system 3 to system 4 is written:

$$[T_{43}] = [T_2(\theta_4)] \tag{A-11}$$

System 5 is obtained by rotating system 4 about the 3-axis through θ_5, the wrist yaw angle. The transformation from system 4 to system 5 is written

$$[T_{54}] = [T_3(\theta_5)] \tag{A-12}$$

System 6 is fixed in the end effector and is obtained by rotating system 5 about the 1-axis. The transformation from system 5 to system 6 is:

$$[T_{65}] = [T_1(\theta_6)] \tag{A-13}$$

In most cases, we are interested in transforming the component of vectors to the longeron or system 1 or to the body system. Using the transformations defined above we can write:

$$[T_{1j}] = [T_{12}][T_{23}]\cdots[T_{j-ij}] \tag{A-14}$$

and

$$[T_{Bj}] = [T_{LB}]^T[B_{1j}] \tag{A-15}$$

where we have used the fact that

$$[T_{ij}] = [T_{ji}]^T \tag{A-16}$$

The convention is followed of labeling as the first index the coordinate system transformed to, and as the second index the coordinate system transformed from.

APPENDIX B

RMS ANGLE INITIALIZATION OR COMPUTATION

The purpose of this appendix is to present a derivation of the equations used to compute the arm angles given the position of the tip of the end effector and the orientation of system 6* relative to the orbiter body system.

This problem can be reduced to computing the arm angles starting with the position vector of the RMS orbiter attach point to the tip of the end effector expressed in the longeron system and the transformation matrix from the end effector system to the longeron system. Definitions of certain arm lengths used in these computations follow.

ℓ_1 The distance from the orbiter arm attach point to the shoulder pitch joint

ℓ_2 The length of the upper arm from the shoulder pitch joint to the elbow pitch joint

ℓ_3 The length of the lower arm from the elbow pitch joint to the wrist pitch joint

ℓ_4 The distance from the wrist pitch joint to the wrist yaw joint

ℓ_5 The distance from the wrist yaw joint to the tip of the end effector

Using this information, the transformation from the end effector system to the longeron system can be written

$$[T_{16}] = [T_3(\theta_1)]^T [T_2(\theta_2 + \theta_3 + \theta_4)]^T [T_3(\theta_5)]^T [T_1(\theta_6)]^T \qquad \text{(B-1)}$$

Also, the component of the position vector from the orbiter attach poir the tip of the end effector in the longeron system can be written

---

*See Appendix A.

$$\{r_{16}\} = -\{1_3\}\ell_1 + [T_{12}]\{1_1\}\ell_2 + [T_{13}]\{1_1\}\ell_3 + [T_{14}]\{1_1\}\ell_4 + [T_{16}]\{1_1\}\ell_5 \tag{B-2}$$

From eq. (B-2),

$$\begin{aligned}\{r_1\} &= \{r_{16}\} + \{1_3\}\ell_1 - [T_{16}]\{1_1\}\ell_5 \\ &= [T_{12}]\{1_1\}\ell_2 + [T_{13}]\{1_1\}\ell_3 + [T_{14}]\{1_1\}\ell_4\end{aligned} \tag{B-3}$$

where $\{r_1\}$ is the position vector from the shoulder pitch joint to the wrist yaw joint. It can be seen that the projection of this vector onto the x-y longeron plane defines the shoulder yaw angle

$$\tan\theta_1 = \frac{r_1(2)}{r_1(1)} \tag{B-4}$$

or

$$\theta_1 = \tan^{-1}\left(r_1(2)\Big/r_1(1)\right)$$

Then

$$[B] = [B_{16}]^T[T_3(\theta_1)]^T = [T_1(\theta_6)][T_3(\theta_5)][T_2(\beta)] \tag{B-5}$$

where

$$\beta = \theta_2 + \theta_3 + \theta_4 \tag{B-6}$$

Expanding eq. (B-5),

$$[B] = \begin{bmatrix} 1 & 0 & 0 \\ 0 & C\theta_6 & S\theta_6 \\ 0 & -S\theta_6 & C\theta_6 \end{bmatrix}\begin{bmatrix} C\theta_5 & S\theta_5 & 0 \\ -S\theta_5 & C\theta_5 & 0 \\ 0 & 0 & 1 \end{bmatrix}\begin{bmatrix} C\beta & 0 & -S\beta \\ 0 & 1 & 0 \\ S\beta & 0 & C\beta \end{bmatrix} = \begin{bmatrix} C\theta_5C\beta & S\theta_5 & -C\theta_5S\beta \\ C\theta_5C\beta & C\theta_6C\theta_5 & -C\theta_5S\beta \\ C\theta_5C\beta & -S\theta_6C\theta_5 & -C\theta_5S\beta \end{bmatrix} \tag{B-7}$$

From eq. (B-7),

$$\theta_5 = \sin^{-1}(B(1,2)) \tag{B-8}$$

$$\theta_6 = \tan^{-1}\left(\frac{-B(3,2)}{B(2,2)}\right) \tag{B-9}$$

$$\beta = \tan^{-1}\left(\frac{-B(1,3)}{B(1,1)}\right) \tag{B-10}$$

Using eq. (B-3),

$$\{p\} = [T_3(\theta_1)]\{r_1\} = [T_2(\theta_2)]^T\{1_1\}\ell_2$$

$$+ [T_2(\theta_2 + \theta_3)]^T\{1_1\}\ell_3 + [T_2(\beta)]^T\{1_1\}\ell_4 \tag{B-11}$$

From this, we can write

$$\{p\} = C\theta_2\{1_1\}\ell_2 - S\theta_2\{1_3\}\ell_2 + C(\theta_2 + \theta_3)\{1_1\}\ell_3$$

$$- S\theta_2\{1_3\}\ell_3 + C\beta\{1_1\}\ell_4 - S\beta\{1_3\}\ell_4 \tag{B-12}$$

and

$$p_1 = C\theta_2\ell_2 + C(\theta_2 + \theta_3)\ell_3 + C\beta\ell_4$$

$$p_3 = -S\theta_2\ell_2 - S(\theta_2 + \theta_3)\ell_3 - S\beta\ell_4 \tag{B-13}$$

or

$$C\theta_2\ell_2 + C(\theta_2 + \theta_3)\ell_3 = p_1 - C\beta\ell_4 = \alpha$$

$$S\theta_2\ell_2 + S(\theta_2 + \theta_3)\ell_3 = -p_3 - S\beta\ell_4 = \gamma \tag{B-14}$$

Squaring both equations, we obtain

$$C^2\theta_2\ell_2^2 + 2C\theta_2\ C(\theta_2 + \theta_3)\ell_2\ell_3 + C^2(\theta_2 + \theta_3)\ell_3^2 = \alpha^2$$

$$S^2\theta_2\ell_2 + 2S\theta_2\ S(\theta_2 + \theta_3)\ell_2\ell_3 + S^2(\theta_2 + \theta_3)\ell_3^2 = \gamma^2 \tag{B-15}$$

Adding these equations, we obtain

$$\ell_2^2 + 2\ell_2\ell_3\ C\theta_3 + \ell_3^2 = \alpha^2 + \gamma^2 \tag{B-16}$$

or

$$\theta_3 = \pm\cos^{-1}\left(\frac{\alpha^2 + \gamma^2 - \ell_2^2 - \ell_3^2}{2\ell_2\ell_3}\right) \tag{B-17}$$

From the geometry of the RMS, we know that θ_3 is always negative; therefore,

$$\theta_3 = -\cos^{-1}\left(\frac{\alpha^2 + \gamma^2 - \ell_2^2 - \ell_3^2}{2\ell_2\ell_3}\right) \tag{B-18}$$

From eq. (B-14), we can write

$$C\theta_2\ell_2 + C\theta_2C\theta_3\ell_3 - S\theta_2S\theta_3\ell_3 = \alpha$$

$$S\theta_2\ell_2 + S\theta_2C\theta_3\ell_3 + C\theta_2S\theta_3\ell_3 = \gamma \tag{B-19}$$

Now

$$S\theta_2(\ell_2 + \ell_3C\theta_3) = \gamma - C\theta_2S\theta_3\ell_3 \tag{B-20}$$

$$S\theta_2 = \frac{\gamma - C\theta_2S\theta_3\ell_3}{\ell_2 + \ell_3C\theta_3} \tag{B-21}$$

Substituting eq. (B-21) into the first of eqs. (B-19), we have

$$C(\theta_2)(\ell_2 + C\theta_3\ell_3) - \left(\frac{\gamma - C\theta_2S\theta_3\ell_3}{\ell_2 + \ell_3C\theta_3}\right)S\theta_3\ell_3 = \alpha \tag{B-22}$$

Solving for θ_2, we have

$$\theta_2 = \cos^{-1}\left(\frac{\alpha(\ell_2 + \ell_3C\theta_3) + \gamma S\theta_3\ell_3}{\ell_2^2 + \ell_3^2 + 2\ell_2\ell_3C\theta_3}\right) \tag{B-23}$$

Using eq. (B-6), we have

$$\theta_4 = \beta - \theta_2 - \theta_3 \tag{B-24}$$

This completes the derivation.

APPENDIX C

THE RESOLVED RATE LAW

The purpose of this appendix is to present a derivation of the Resolved Rate Law, which is a relationship between the translation and angular velocity of the tip of the end effector and the joint angle rates. This relationship may be denoted in the following manner:

$$\overset{6\times 1}{\begin{bmatrix} \{\omega\} \\ \{V\} \end{bmatrix}} = \overset{6\times 1}{[A]} \; \overset{6\times 1}{\{\dot{\theta}\}} \tag{C-1}$$

where

$\{V\}$ is a column matrix of the relative translational velocity in the orbiter body system

$\{\omega\}$ is a column matrix of the component of the relative angular velocity

$[A]$ is a 6×6 matrix commonly referred to as a Jacobian matrix

$\{\dot{\theta}\}$ is a 6×1 column matrix of the joint angle rates.

Let $\bar{e}_i^j$ denote a unit base vector in the i direction of system j*, then the angular velocity of the end effector can be written

$$\bar{\omega} = \dot{\theta}_1 \bar{e}_3^2 + (\dot{\theta}_2 + \dot{\theta}_3 + \dot{\theta}_4)\, \bar{e}_2^2 + \dot{\theta}_5\, \bar{e}_3^6 + \dot{\theta}_6 \bar{e}_1^6 \tag{C-2}$$

Before proceeding, note the following useful relationships:

$$[T_i(\theta)]\{1_i\} = \{1_i\} = [T_i(\theta)]^T\{1_i\} \tag{C-3}$$

---

*The same coordinate systems are used as defined in Appendix A.

and

$$[T_i(\theta)]\{l_j\} = C\theta\{l_j\} - S\theta\{l_i\} \times \{l_j\}$$

$$i \neq j$$

$$[T_i(\theta)]^T\{l_j\} = C\theta\{l_j\} + S\theta\{l_i\} \times \{l_j\} \tag{C-4}$$

Using the transformation presented in Appendix A and eq. (C-2), we can write

$$\left[T_2(\theta_2 + \theta_3 + \theta_4)\right]\left[T_3(\theta_1)\right]\{\omega\} = \left[T_2(\theta_2 + \theta_3 + \theta_4)\right]\{l_3\}\dot{\theta}_1 + \{l_2\}(\dot{\theta}_2 + \dot{\theta}_3 + \dot{\theta}_4)$$

$$+ \{l_3\}\dot{\theta}_5 + \left[T_3(\theta_5)\right]^T\{l_1\}\dot{\theta}_6 = C(\theta_2 + \theta_3 + \theta_4)\{l_3\} - S(\theta_2 + \theta_3 + \theta_4)\{l_1\}\dot{\theta}_1$$

$$+ \{l_2\}(\dot{\theta}_2 + \dot{\theta}_3 + \dot{\theta}_4) + \{l_3\}\dot{\theta}_5 + C\theta_5\{l_1\}\dot{\theta}_6 + S\theta_5\{l_2\}\dot{\theta}_6 \tag{C-5}$$

Eq. (C-5) gives one of the relationships we want. The second equation, relative translational velocity to joint rates, can be developed by writing the position vector from the shoulder pitch joint to the tip of the end effector and differentiating this relationship to arrive at the desired results.

The components of the position vector expressed in the longeron system can be written

$$\{r\} = \left[T_3(\theta_1)\right]^T\left[T_2(\theta_2)\right]^T\{l_1\}\ell_2 + \left[T_3(\theta_1)\right]^T\left[T_2(\theta_2 + \theta_3)\right]^T\{l_1\}\ell_3$$

$$+ \left[T_3(\theta_1)\right]^T\left[T_2(\theta_2 + \theta_3 + \theta_4)\right]\{l_1\}\ell_4$$

$$+ \left[T_3(\theta_1)\right]^T\left[T_2(\theta_2 + \theta_3 + \theta_4)\right]^T\left[T_3(\theta_5)\right]^T\{l_1\}\ell_5 \tag{C-6}$$

Differentiating eq. (C-6), we get

$$\{\dot{r}\} = \{V\} = \left(\dot{\theta}_1\left[\frac{dT_3(\theta_1)}{d\theta_1}\right]^T\left[T_2(\theta_2)\right]^T + \dot{\theta}_2\left[T_3(\theta_1)\right]^T\left[\frac{dT_2(\theta_2)}{d\theta_2}\right]^T\right)$$

$$\left(\{1_1\}\ell_2 + \left[T_2(\theta_3)\right]^T\left(\{1_1\}\ell_3 + \left[T_2(\theta_4)\right]\left(\{1_1\}\ell_4 + \left[T_3(\theta_5)\right]^T\{1_1\}\ell_5\right)\right)\right)$$

$$+ \dot{\theta}_3\left[T_3(\theta_1)\right]^T\left[T_2(\theta_2)\right]^T\left[\frac{dT_2(\theta_3)}{d\theta_3}\right]^T\left(\{1_1\}\ell_3 + \left[T_2(\theta_4)\right]^T\left(\{1_1\}\ell_4 + \left[T_3(\theta_5)\right]^T\{1_1\}\ell_5\right)\right)$$

$$+ \dot{\theta}_4\left[T_3(\theta_1)\right]^T\left[T_2(\theta_2 + \theta_3)\right]^T\left[\frac{dT_2(\theta_4)}{d\theta_4}\right]^T\left(\{1_1\}\ell_4 + \left[T_3(\theta_5)\right]^T\{1_1\}\ell_5\right)$$

$$+ \dot{\theta}_5\left[T_3(\theta_1)\right]^T\left[T_2(\theta_2 + \theta_3 + \theta_4)\right]^T\left[\frac{dT_3(\theta_5)}{d\theta_5}\right]\{1_1\}\ell_5 \qquad \text{(C-7)}$$

After performing a considerable amount of algebra on eq. (C-7), the following result can be obtained.

$$\left[T_2(\theta_2 + \theta_3 + \theta_4)\right]\left[T_3(\theta_1)\right]\{V\} = \dot{\theta}_1\Big(-C(\theta_2 + \theta_3 + \theta_4)S\theta_5\ell_5\{1_1\} - S(\theta_2 + \theta_3 + \theta_4)S\theta_5\ell_5\{1_3\}$$

$$+ \left(C\theta_2\ell_2 + C(\theta_2 + \theta_3)\ell_3 + C(\theta_2 + \theta_3 + \theta_4)(\ell_4 + C\theta_5\ell_5)\right)\{1_2\}\Big)$$

$$+ \dot{\theta}_2\Big(\left(S(\theta_3 + \theta_4)\ell_2 + S\theta_4\ell_3\right)\{1_1\} + \left(-C(\theta_3 + \theta_4)\ell_2 - C\theta_4\ell_3 - (\ell_4 + C\theta_5\ell_5)\right)\{1_3\}\Big)$$

$$+ \dot{\theta}_3\, S\theta_4\ell_3\{1_1\} + \left(-C\theta_4\ell_3 - (\ell_4 + C\theta_5\ell_5)\right)\{1_3\}$$

$$+ \dot{\theta}_4\left(-(\ell_4 + C\theta_5\ell_5)\{1_3\}\right) + \dot{\theta}_5\left(-S\theta_5\ell_5\{1_1\} + C\theta_5\ell_5\{1_2\}\right) \qquad \text{(C-8)}$$

Eqs. (C-5) and (C-8) are the equations to be solved. First, let us make the following definitions.

$$\begin{bmatrix} b_1 \\ b_2 \\ b_3 \end{bmatrix} = \left[T_2(\theta_2 + \theta_3 + \theta_4)\right]\left[T_3(\theta_1)\right]\{\omega\} \qquad \text{(C-9)}$$

$$\begin{bmatrix} b_4 \\ b_5 \\ b_6 \end{bmatrix} = \left[T_2(\theta_2 + \theta_3 + \theta_4)\right]\left[T_3(\theta_1)\ \{V\}\right] \tag{C-10}$$

Also, we will define

$a_{11} = -S(\theta_2 + \theta_3 + \theta_4)$, $a_{16} = C\theta_5$, $a_{22} = a_{23} = a_{24} = a_{35} = 1$

$a_{26} = S\theta_5$, $a_{31} = C(\theta_2 + \theta_3 + \theta_4)$, $a_{41} = -C(\theta_2 + \theta_3 + \theta_4)S\theta_5\ell_5$

$a_{51} = C\theta_2\ell_2 + C(\theta_2 + \theta_3)\ell_3 + C(\theta_2 + \theta_3 + \theta_4)(\ell_4 + C\theta_5\ell_5)$

$a_{61} = -S(\theta_2 + \theta_3 + \theta_4)S\theta_5\ell_5$

$a_{42} = S(\theta_3 + \theta_4)\ell_2 + S\theta_4\ell_3$

$a_{62} = -C(\theta_3 + \theta_4)\ell_2 - C\theta_4\ell_3 - (\ell_4 + C\theta_5\ell_5)$

$a_{43} = S\theta_4\ell_3$

$a_{63} = -C\theta_4\ell_3 - (\ell_4 + C\theta_5\ell_5)$

$a_{64} = -(\ell_4 + C\theta_5\ell_5)$

$a_{45} = -S\theta_5\ell_5$, $a_{55} = C\theta_5\ell_5$ (C-11)

Using the definitions in eqs. (C-9) — (C-11), we can write

$$[A]\{\dot{\theta}\} = \{b\} \tag{C-12}$$

or

$$\begin{bmatrix} a_{11} & 0 & 0 & 0 & 0 & a_{16} \\ 0 & 1 & 1 & 1 & 0 & a_{26} \\ a_{31} & 0 & 0 & 0 & 1 & 0 \\ a_{41} & a_{42} & a_{43} & 0 & a_{45} & 0 \\ a_{51} & 0 & 0 & 0 & a_{55} & 0 \\ a_{61} & a_{62} & a_{63} & a_{64} & 0 & 0 \end{bmatrix} \begin{bmatrix} \dot{\theta}_1 \\ \dot{\theta}_2 \\ \dot{\theta}_3 \\ \dot{\theta}_4 \\ \dot{\theta}_5 \\ \dot{\theta}_6 \end{bmatrix} = \begin{bmatrix} b_1 \\ b_2 \\ b_3 \\ b_4 \\ b_5 \\ b_6 \end{bmatrix} \tag{C-13}$$

Because of the sparseness of the [A] matrix in eq. (C-13), it is convenient to write the $\dot{\theta}$'s explicitly. From eq. (C-13) we can write

$$\begin{bmatrix} a_{31} & 1 \\ a_{51} & a_{55} \end{bmatrix} \begin{bmatrix} \dot{\theta}_1 \\ \dot{\theta}_5 \end{bmatrix} = \begin{bmatrix} b_3 \\ b_5 \end{bmatrix} \tag{C-14}$$

or

$$\begin{bmatrix} \dot{\theta}_1 \\ \dot{\theta}_5 \end{bmatrix} = \frac{1}{a_{31}a_{55} - a_{51}} \begin{bmatrix} a_{55} & -1 \\ -a_{51} & a_{31} \end{bmatrix} \begin{bmatrix} b_3 \\ b_5 \end{bmatrix} \tag{C-15}$$

Also from eq. (C-13)

$$b_1 = a_{11}\dot{\theta}_1 + a_{16}\dot{\theta}_6$$

or

$$\dot{\theta}_6 = \frac{1}{a_{16}}(b_1 - a_{11}\dot{\theta}_1) \tag{C-16}$$

This leaves:

$$\begin{bmatrix} 1 & 1 & 1 \\ a_{42} & a_{43} & 0 \\ a_{62} & a_{63} & a_{64} \end{bmatrix} \begin{bmatrix} \dot{\theta}_2 \\ \dot{\theta}_3 \\ \dot{\theta}_4 \end{bmatrix} = \begin{bmatrix} b_2 - a_{26}\dot{\theta}_6 \\ b_4 - a_{41}\dot{\theta}_1 - a_{45}\dot{\theta}_5 \\ b_6 - a_{61}\dot{\theta}_1 \end{bmatrix} \tag{C-17}$$

which yields

$$\begin{bmatrix} \dot{\theta}_2 \\ \dot{\theta}_3 \\ \dot{\theta}_4 \end{bmatrix} = \frac{1}{a_{43}(a_{64} - a_{62}) - a_{42}(a_{64} - a_{63})} \begin{bmatrix} a_{43}a_{64} & a_{63} - a_{64} & -a_{43} \\ -a_{42}a_{64} & a_{64} - a_{62} & a_{42} \\ a_{42}a_{63} - a_{62}a_{43} & a_{62} - a_{63} & a_{43} - a_{42} \end{bmatrix} \begin{bmatrix} b_2 - a_{26}\dot{\theta}_6 \\ b_4 - a_{41}\dot{\theta}_1 - a_{45} \\ b_6 - a_{61}\dot{\theta}_1 \end{bmatrix} \tag{C-18}$$

This completes the development of the desired equations. It should be noted that the following singularity conditions exist, which follow from the divisors appearing in eqs. (C-15), (C-16), and (C-18):

$$C\theta_2\ell_2 + C(\theta_2 + \theta_3)\ell_3 + C(\theta_2 + \theta_3 + \theta_4)\ell_4 = 0$$

$$C\theta_5 = 0 \ , \qquad S\theta_3 = 0 \tag{C-19}$$

APPENDIX D

LINE-OF-SIGHT STEERING AND AXIS-OF-ROTATION STEERING

The purpose of this appendix is to develop the equations used in the line-of-sight steering and the axis-of-rotation steering of the SVDS RMS kinematic capability. In line-of-sight steering, the tip of the end effector is commanded to move along a line from its initial position to its final commanded position. In axis-of-rotation steering, the end effector coordinate system is rotated about its single axis of rotation to change its orientation from its initial orientation to its final commanded orientation.

LINE-OF-SIGHT STEERING

The direction of the line of sight is first determined, and a unit vector in this direction is computed.

$$\{\Delta r\} = \{R_f\} - \{R_I\} \tag{D-1}$$

where

$\{R_f\}$ is the final desired position vector expressed in the orbiter system relative to the CM of the orbiter

$\{R_I\}$ is the initial position vector

$\{\Delta r\}$ is the position vector representing the change in position desired

Compute the distance to be traveled as

$$d = \sqrt{\{\Delta r\}^T\{\Delta r\}} \tag{D-2}$$

and the unit vector in the direction of the desired velocity as

$$\{u_T\} = \frac{1}{d}\{\Delta r\} \tag{D-3}$$

Next, assuming an initial velocity of zero and an acceleration and velocity limit, compute the times of the acceleration discontinuities for a trapezoidal velocity time history. Determine if maximum velocity will be reached by computing

$$d_m = V_m^2 / a_m \tag{D-4}$$

If d is greater than d_m, then maximum velocity will be reached and the velocity command profile will be

$$t_1 = \frac{V_m}{a_m}$$

$$t_2 = \frac{d_m - d}{V_m} + t_1$$

$$t_3 = t_2 + t_1 \tag{D-5}$$

and

$$\{V_c\} = a_m t\{u_T\} \quad 0 < t \leq t_1$$

$$\{V_c\} = V_m\{u_T\} \quad t_1 < t \leq t_2$$

$$\{V_c\} = a_m(t_3 - t)\{u_T\} \quad t_2 < t \leq t_3 \tag{D-6}$$

If d_m is greater than d, then maximum velocity limit will not be reached and the actual maximum velocity can be computed as

$$V_m^* = \sqrt{a_m d} \tag{D-7}$$

This leads to the following times and velocity commands:

$$t_1 = \frac{V_m^*}{a_m}$$

$$t_2 = t_1$$

$$t_3 = 2t_1 \tag{D-8}$$

$$\{V_c\} = a_m t\{u_T\} \quad 0 < t \leq t_1$$

$$\{V_c\} = a_m(t_3 - t)\{u_T\} \quad 0 < t \leq t_3 \tag{D-9}$$

AXIS-OF-ROTATION STEERING

The algorithm for computing the desired angular velocity command requires the transformation matrix to the initial orientation and the transformation to the desired final orientation. The transformation from the initial orientation is then computed and the axis of rotation and the angle of rotation are extracted from this matrix.

$$[B_{FI}] = [B_F][B_I]^T \tag{D-10}$$

Using eq. (A-4), we can write

$$[B_{FI}] = (\ulcorner I \lrcorner - \sin\theta\ [\underline{u}] + (1 - \cos\theta)[\underline{u}]^2) \tag{D-11}$$

From (D-11), we see that

$$[B] = \frac{[B_{FI}]^T - [B_{FI}]}{2} = \sin\theta\ [\underline{u}] \tag{D-12}$$

Eq. (D-12) can be used to compute the axis of rotation if θ is not equal to 180°. Compute

$$W_1 = (B_{32} - B_{23})/2$$

$$W_2 = (B_{13} - B_{31})/2$$

$$W_3 = (B_{21} - B_{12})/2 \tag{D-13}$$

and

$$\{W\} = \sin\theta\ \{u\} \tag{D-14}$$

so

$$\sin\theta = \sqrt{\{W\}^T\{W\}} \tag{D-15}$$

and

$$\{u\} = \frac{1}{\sin\theta}\{W\} \tag{D-16}$$

If $\sin\theta = 0$, then it must be determined if the angle of rotation is 0 or 180^0 and if $\theta = 180^0$, what is the axis of rotation. The trace of $[B_{FI}]$ is examined: if the trace is 3, then $\theta = 0$; if the trace is 1, then $\theta = 180^0$. To determine the axis of rotation for the case where $\theta = 180^0$, the following formulas can be used

$$[C] = \frac{1}{2}\left([B_{FI}] - [I]\right) = \frac{1}{2}(1 - \cos\theta)[\underline{u}]^2 = [\underline{u}]^2 = \begin{bmatrix} -\left(u_2^2 + u_3^2\right) & u_1u_2 & u_1u_3 \\ u_1u_2 & -\left(u_1^2 + u_3^2\right) & u_2u_3 \\ u_1u_3 & u_2u_3 & -\left(u_1^2 + u_2^2\right) \end{bmatrix} \tag{D-17}$$

and

$$\sum_{i=1}^{3} u_i^2 = 1 \tag{D-18}$$

From the diagonal elements of [C] the magnitudes of the components of {u} can be determined using the following formulas.

$$\begin{aligned} \mathrm{Abs}(u_1) &= \sqrt{\frac{1}{2}\left(C_{11} - C_{22} - C_{33}\right)} \\ \mathrm{Abs}(u_2) &= \sqrt{\frac{1}{2}\left(C_{22} - C_{11} - C_{33}\right)} \\ \mathrm{Abs}(u_3) &= \sqrt{\frac{1}{2}\left(C_{33} - C_{11} - C_{22}\right)} \end{aligned} \tag{D-19}$$

Next, determine the component with maximum magnitude and assume it to be positive. Assuming u_j is this element, then

$$u_i = \frac{C_{ji}}{u_j} \qquad j \neq i \tag{D-20}$$

The same technique is used for the determination of the magnitude of the commanded angular velocity, as was used in the line-of-sight steering.

DISTRIBUTION:

F. Barnes/LEC
E. Copeland/LEC
D. Peticolas/LEC (7)
K. Richards/LEC
D. Scott/LEC
M. Voss/LEC
F. Williams/LEC

C. Colwell/MDAC
E. Pyron/MDAC

JSC /C. Gott/FM4
R. McAdams/FM4
E. McHenry/FM6
H. Sullivan/FM6
R. Weber/FM4