General Disclaimer

One or more of the Following Statements may affect this Document

- This document has been reproduced from the best copy furnished by the organizational source. It is being released in the interest of making available as much information as possible.

- This document may contain data, which exceeds the sheet parameters. It was furnished in this condition by the organizational source and is the best copy available.

- This document may contain tone-on-tone or color graphs, charts and/or pictures, which have been reproduced in black and white.

- This document is paginated as submitted by the original source.

- Portions of this document are not fully legible due to the historical nature of some of the material. However, it is the best reproduction available from the original submission.

Produced by the NASA Center for Aerospace Information (CASI)

BOEING

Solid Rocket Booster Performance Evaluation Model

VOLUME II – USERS MANUAL

(NASA-CR-150336) SOLID ROCKET BOOSTER PERFORMANCE EVALUATION MODEL. VOLUME 2: USERS MANUAL (Boeing Aerospace Co., Huntsville, Ala.) 191 p HC A09/MF A01 CSCL 21H G3/20

N77-27182

Unclas 36836

AUG 1977
RECEIVED
NASA STI FACILITY
INPUT BRANCH

CONTRACT NAS8–29643

DCN 1–2–50–23786
SOLID ROCKET BOOSTER PERFORMANCE EVALUATION MODEL

Solid Rocket Booster Performance Evaluation Model
VOLUME II – USERS MANUAL

PREPARED BY

BOEING AEROSPACE COMPANY
(A DIVISION OF THE BOEING COMPANY)
HUNTSVILLE, ALABAMA

C. R. CARTER – PROJECT SUPERVISOR

SEPTEMBER 7, 1974

PREPARED FOR

NATIONAL AERONAUTICS AND SPACE ADMINISTRATION
GEORGE C. MARSHALL SPACE FLIGHT CENTER
HUNTSVILLE, ALABAMA

CONTENTS

SECTION		PAGE
	CONTENTS	
	LIST OF FIGURES	
	LIST OF TABLES	
	ACKNOWLEDGEMENTS	
1.0	INTRODUCTION	1-1
2.0	PROGRAM DESCRIPTION	2-1
2.1	MODULE DESCRIPTION	2-1
2.1.1	Executive Module (MAIN)	2-3
2.1.2	Centralized Input Module (INPUT)	2-3
2.1.3	BATES Isp Module (BATES)	2-3
2.1.3.1	BATES No Loss Delivered Specific Impulse	2-4
2.1.3.2	"End Item" Delivered Specific Impulse and Characteristic Velocity	2-6
2.1.4	Isp Scaling Module (SISCAL)	2-7
2.1.5	Contractor Data Isp Module (CDSI)	2-7
2.1.6	Internal Ballistics Module (IBM)	2-9
2.1.7	Thrust Scaling Module (FSCAL)	2-11
2.1.8	"Inert" Mass Module (INERT)	2-11
2.1.9	Flight and Static Test Reconstruction Module (RECØN)	2-13
2.1.9.1	Static Test Reconstruction	2-13
2.1.9.2	Flight Reconstruction	2-13
2.1.10	Dispersion Module (DISP)	2-14
2.1.11	Output Module (ØUTPUT)	2-14
2.1.11.1	Tabulated Computer Printout	2-14
2.1.11.2	Performance Data Tapes	2-15
2.1.11.3	Plot Tapes	2-15
2.1.11.4	Punched Data Cards	2-15
2.1.12	Nozzle Submergence and Contour Effects Module (NSCE)	2-15
2.2	VARIABLE AND CONSTANT NAMES	2-16
2.2.1	Common Storage	2-16
2.2.2	FORTRAN Statement Numbers	2-16
2.2.3	FORTRAN Nomenclature	2-16
2.2.4	FORTRAN Constants	2-18
2.2.5	Program Indicator Concepts	2-18
2.3	SRB-II OVERLAY STRUCTURE	2-18
3.0	PROGRAM INPUT DATA	3-1
3.1	DATA INPUT METHODS	3-1
3.1.1	BLØCK DATA	3-1
3.1.2	NAMELIST	3-1
3.1.3	Set Format Cards	3-2
3.1.4	Set Format Magnetic Tape	3-2
3.2	PROGRAM INPUT DATA PACKAGES	3-2
3.2.1	Control Data Package	3-3

CONTENTS (CONTINUED)

SECTION		PAGE
3.2.2	Lewis Data Package	3-3
3.2.3	IDNØZL Data Package	3-12
3.2.4	IBM Data Package	3-12
3.3	RECONSTRUCTION DATA TAPES	3-13
3.4	PROGRAM OPTIONS	3-13
3.4.1	Isp Scaling Prediction	3-18
3.4.2	Contractor Data Scaling Prediction	3-18
3.4.3	BATES Prediction	3-18
3.4.4	Dispersion Prediction	3-18
3.4.5	Thrust Scaling Prediction	3-19
3.4.6	Reconstruction	3-19
3.4.7	Optional Output	3-19
3.5	INTERNAL BALLISTICS OPTIONS	3-49
3.5.1	Grain Geometry	3-49
3.5.1.1	Aft-Head Section	3-53
3.5.1.2	Fore-Head Section	3-54
3.5.1.3	Cylindrical Section	3-55
3.5.2	Propellant Properties	3-58
3.5.3	Burning Rate Inputs	3-58
3.5.4	Nozzle Configuration	3-61
3.5.5	Nozzle Submergence	3-62
3.5.6	Internal Gas Dynamics	3-63
3.5.7	Time Control Inputs	3-64
3.5.8	Propellant Mass Correlation	3-65
3.6	SAMPLE INPUT DATA FOR IBM 370 VERSION OF SRB-II	3-104
3.7	UNIVAC 1108 CONTROL CARDS	
4.0	PROGRAM OUTPUT	4-1
4.1	COMPUTER PRINTOUT	4-1
4.1.1	Input Data and Initial Values Printout	4-1
4.1.2	Module Data Printout	4-1
4.1.2.1	BATES Specific Impulse Module Printout	4-2
4.1.2.2	Specific Impulse Scaling Module Printout	4-2
4.1.2.3	Contractor Data Specific Impulse Module Printout	4-2
4.1.2.4	Thrust Scaling Module Printout	4-2
4.1.2.5	Dispersion Module Printout	4-7
4.1.2.6	Internal Ballistics Module Printout	4-7
4.1.3	Miscellaneous Optional SRB-II Printout	4-15
4.2	MAGNETIC TAPE OUTPUT	4-18
4.3	PUNCHED CARD OUTPUT	4-19
4.4	ERROR MESSAGES	4-20
	APPENDIX A - THERMO DATA (FORMAT AND LISTING) MSFC TAPE 23810	A-1
	APPENDIX B - CURVE FITTING EQUATIONS FOR DERIVING SRB-II INPUT DATA	B-1

LIST OF FIGURES

FIGURE		PAGE
2-1	MODULARIZED SRB-II PROGRAM FLOWCHART	2-2
2-2	PARTICLE SIZE VERSUS THROAT DIAMETER	2-5
2-3	NOZZLE EFFICIENCY VERSUS MASS FLOWRATE	2-8
2-4	MAJOR INTERNAL BALLISTICS MODULE CAPABILITIES	2-12
2-5	SRB-II OVERLAY TREE FOR THE IBM 370 COMPUTER SYSTEM	2-19
2-6	SRB-II OVERLAY TREE FOR THE MSFC UNIVAC 1108 COMPUTER SYSTEM	2-20
3-1	INPUT DATA PACKAGE ARRANGEMENT	3-4
3-2	TYPICAL LEWIS DATA PACKAGE	3-7
3-3	TYPICAL REACTANTS AND SPECIES CARDS FOR LEWIS DATA PACKAGES	3-10
3-4	OPTIONS TREE FOR THE PREDICTION MODE OF SRB-II	3-15
3-5	OPTIONS TREE FOR THE RECONSTRUCTION MODE OF SRB-II	3-17
3-6	INTERNAL BALLISTICS MODULE OPTIONS TREE	3-50
3-7	PROPELLANT MASS CORRELATION LOGIC FLOWCHART	3-86
3-8	IBM MODULE MODEL	3-87
3-9	TYPICAL MOTOR CONFIGURATIONS	3-88
3-10	STRAIGHT THROUGH GRAIN CONFIGURATION	3-89
3-11	STRAIGHT THROUGH GRAIN CONFIGURATION INPUTS	3-90
3-12	HEAD-END WEB	3-91
3-13	GRAIN CONFIGURATION OPTIONS	3-92
3-14	GEOMETRICAL MODEL FOR REFERENCE PLANE AND INCREMENT DIVIDING PLANE IDENTIFICATION	3-93
3-15	GENERAL FORKED WAGON WHEEL CONFIGURATION INPUTS	3-94
3-16	CALCULATED PLANE CONSTANTS	3-95
3-17	CALCULATED PLANE CONSTANTS	3-96
3-18	ALA DEFINITION	3-97
3-19	WAGON WHEEL CONFIGURATION INPUTS	3-98
3-20	STAR GRAIN CONFIGURATION INPUTS	3-99
3-21	SLOTTED-CONE GRAIN CONFIGURATION INPUTS	3-100
3-22	CIRCULAR PORT CONFIGURATION INPUTS	3-101
3-23	NOZZLE CONFIGURATION INPUTS	3-102
3-24	SUBMERGED NOZZLE INPUT DATA	3-103
4-1	BATES SPECIFIC IMPULSE MODULE SAMPLE PRINTOUT	4-3
4-2	SPECIFIC IMPULSE SCALING MODULE SAMPLE PRINTOUT	4-4
4-3	CONTRACTOR DATA SPECIFIC IMPULSE MODULE SAMPLE PRINTOUT	4-5
4-4	THRUST SCALING MODULE SAMPLE PRINTOUT	4-6
4-5	DISPERSION MODULE SAMPLE PRINTOUT	4-8
4-6	INTERNAL BALLISTICS MODULE SAMPLE PRINTOUT OF MOTOR PERFORMANCE DATA	4-9
4-7	INTERNAL BALLISTICS MODULE SAMPLE PRINTOUT OF INCREMENT DIVIDING PLANE DATA	4-10
4-8	LEWIS SUBROUTINE SAMPLE PRINTOUT	4-16

LIST OF TABLES

TABLE		PAGE
3-I	IDENTIFICATION CONTROL CARDS FOR DATA PACKAGES	3-5
3-II	REACTANTS CARDS	3-8
3-III	LIST OF REACTANTS CARDS FOR SOME OXIDANTS & FUELS	3-9
3-IV	INPUT DATA REQUIRED FOR AN ISP SCALING PREDICTION	3-20
3-V	VARIABLE DEFINITIONS FOR AN ISP SCALING PREDICTION	3-21
3-VI	INPUT DATA REQUIRED FOR A CONTRACTOR DATA SCALING PREDICTION	3-23
3-VII	VARIABLE DEFINITIONS FOR A CONTRACTOR SCALING PREDICTION	3-24
3-VIII	INPUT DATA REQUIRED FOR A BATES PREDICTION	3-27
3-IX	VARIABLE DEFINITIONS FOR A BATES PREDICTION	3-30
3-X	INPUT DATA REQUIRED FOR A DISPERSION PREDICTION	3-36
3-XI	VARIABLE DEFINITIONS FOR A DISPERSION PREDICTION	3-38
3-XII	INPUT DATA REQUIRED FOR A THRUST SCALING PREDICTION	3-40
3-XIII	VARIABLE DEFINITIONS FOR THRUST SCALING PREDICTION	3-41
3-XIV	NOMINAL VALUES FOR USE IN THRUST SCALING PREDICTIONS	3-43
3-XV	INPUT DATA REQUIRED FOR RECONSTRUCTION	3-44
3-XVI	VARIABLE DEFINITIONS FOR A RECONSTRUCTION	3-46
3-XVII	VARIABLE DEFINITIONS FOR MOTOR CASE AND PROPELLANT GRAIN GEOMETRY FACTORS	3-66
3-XVIII	VARIABLE DEFINITIONS FOR NOZZLE PARAMETERS	3-70
3-XIX	VARIABLE DEFINITIONS FOR GEOMETRY TABLES PARAMETERS	3-74
3-XX	VARIABLE DEFINITIONS FOR PROPELLANT PROPERTIES AND BURNING RATE MODEL PARAMETERS	3-77
3-XXI	VARIABLE DEFINITIONS FOR NON-STEADY FLOW, STEADY-STATE, AND PROGRAM TIME CONTROL PARAMETERS	3-81
3-XXII	VARIABLE DEFINITIONS FOR MISCELLANEOUS INPUTS	3-83

ACKNOWLEDGEMENTS

Contributions to the development, programming and documentation of the Solid Rocket Booster Performance Evaluation Model were made by the following personnel:

John R. Colson

Emory E. Lynn

James S. Richards

Charlotte G. Wiser

Any questions concerning this document should be directed to the responsible Project Supervisor.

Charles R. Carter
JD-13
895-2650

SECTION 1

1.0 INTRODUCTION

This document is the Users Manual for the Solid Rocket Booster Performance Evaluation Model (SRB-II). Descriptions of the model, the program options, the required program inputs, the program output format and the program error messages are presented herein. This Users Manual is contained in Volume II of a set of four volumes which describe SRB-II. Volume I contains the engineering description; Volume III contains the sample case; and Volume IV contains the program listing.

SRB-II is written in FORTRAN Language and is operational on both the IBM 370/155 and the MSFC UNIVAC 1108 computers. The model has been extensively overlayed in an effort to meet the MSFC UNIVAC 1108 System core storage restriction of 32,000 words at any given time.

Both analytical and functional simulation techniques are employed in SRB-II to predict performance of the propulsion elements in the Space Shuttle Solid Rocket Booster. The model also contains analytical methods for reconstructing performance of motors for both static test and flight using measured data as direct input. SRB-II calculates the performance of a wide variety of possible solid rocket booster configurations using input data derived from theoretical analysis, small scale tests, large scale tests, and flight motor configurations. Three analytical scaling techniques are included in the model for the purpose of predicting delivered characteristic velocity (c*) and vacuum specific impulse (Isp) of the motor. The predicted Isp and c* are used in conjunction with motor propellant data to predict booster propulsion performance. Motor performance parameters such as thrust, flowrate and operating pressures may be calculated with an internal ballistics technique or scaled from available test data.

The SRB-II Source and Executable Tape has been placed on file in the MSFC Data Systems Laboratory Library as tape number 29312. This tape contains the operational version of SRB-II demonstrated on the MSFC UNIVAC 1108 system, and the symbolic, relocatable, and absolute modules of SRB-II.

SECTION 2

2.0 PROGRAM DESCRIPTION

The Solid Rocket Booster Performance Evaluation Model is made up of analytical and functional techniques combined to simulate the propulsion elements of a solid rocket booster. The model was developed by making maximum use of existing computer programs and simulation techniques. Three existing computer programs incorporated into SRB-II are the Boeing Internal Ballistics Computer Program, the Lewis Thermochemical Computer Program, and the One-Dimensional Two-Phase Flow Loss Computer Program.

SRB-II has user options to select simulations for flight and static test prediction or reconstruction of a wide variety of solid rocket motor configurations. The options selected are dependent on data available to the user; therefore SRB-II may be input with data derived from theoretical analysis, small scale test data, large scale test data, and flight motor configuration data. SRB-II input is described in Section 3.0.

The user has several output options for the calculated propulsion system performance parameters. Output includes major parameters (Isp, thrust, flowrate, mass accounting, and operating pressures) as a function of time, as well as single point scaled data. SRB-II output is described in Section 4.0.

The remaining paragraphs of Section 2.0 include a description of each SRB-II Module, a description of the groundrules used in naming program variables and constants, and a discussion of the overlay which was required to attempt to meet the MSFC UNIVAC 1108 System storage restriction of 32,000 words at any given time.

2.1 MODULE DESCRIPTION

The following procedure was used to synthesize the SRB-II in modular form.

(1) The best solid rocket motor simulation techniques available were selected utilizing existing simulations where possible.

(2) Computer routines were written to describe functions of individual components not already programmed.

(3) The simulations and routines were grouped into modules.

(4) The modules were linked together with an Executive Module such that the path through the model can be selected or controlled by the user.

The modularized SRB-II program flowchart is shown in Figure 2-1. All the modules are linked together with an Executive Module which is used to control the overall program for each simulation case.

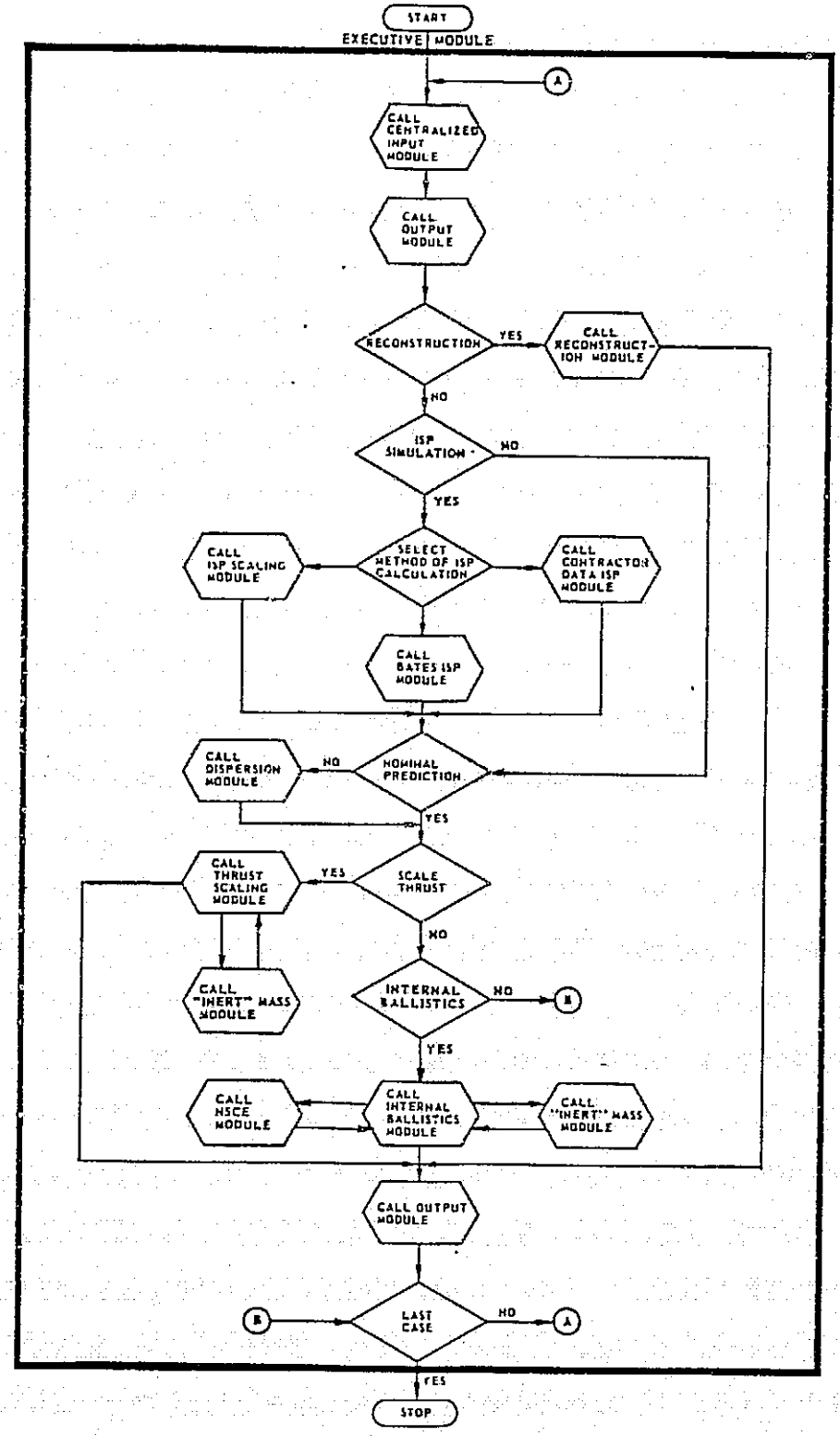

FIGURE 2-1 MODULARIZED SRB-II PROGRAM FLOWCHART

2.1 (Continued)

The following paragraphs will discuss each module in detail.

2.1.1 Executive Module (MAIN)

The Executive Module controls access to the other modules such that a unified analysis of solid rocket booster performance can be performed. The module is set up so that new modules may be readily added. Figure 2-1 is a logic flow chart which shows the manner in which the Executive Module links the other modules. The utilization of the various modules is controlled in the Executive Module by control indicators. These indicators are variables whose values are determined by the program user and are input through the Centralized Input Module. For example, the user could either utilize or bypass the BATES Isp simulation by input of the appropriate value for the BATES Isp Module indicator.

2.1.2 Centralized Input Module (INPUT)

The Centralized Input Module processes input data to the SRB-II using the following four methods: BLOCK DATA, NAMELIST, set format cards, and data tapes. The Centralized Input Module subroutine INPUT processes all NAMELIST and set format cards and transfers the card input data to disk. Data are then read directly from disk by the routines which require the data. Tape inputs are read directly by the routine requiring the data. Direct data access by the program routine is required because of core storage limitations set by the MSFC UNIVAC 1108 operating rules. A complete discussion of input data is given in Section 3.

2.1.3 BATES Isp Module (BATES)

The BATES Isp Module computes the end item vacuum Isp and characteristic velocity (c*), using the Air Force devised BATES method and is the preferred one of three modules provided for these calculations. The Isp Scaling and Contractor Data Modules are considered alternate methods and are discussed in separate paragraphs.

The Air Force devised the BATES method of accurately measuring Isp of a test propellant using a high precision test motor and closely controlled test conditions (References 1 and 2). BATES is an acronym for BAllistic Test Evaluation Scaling. Extensive use and modification over the past twelve years have extended this system to allow precise prediction of propellant performance in the expected "end item" or final production rocket motor.

The BATES system test procedure employs the use of a carefully designed solid propellant test motor. Propellant samples are prepared by the solid rocket motor contractor in separate cartridges which are subsequently

2.1.3 (Continued)

loaded into a test motor much the same as a cartridge is loaded into a gun. The motor is placed in a calorimeter capable of precise heat loss measurement and fired. An extremely accurate test stand is manned by Air Force personnel who actually conduct the test. Air Force personnel also accomplish the data reduction, thus insuring the consistency of all test procedures. Over 400 firings have been made to accurately determine the specific impulse of a number of propellants of interest to the Air Force.

The BATES philosophy involves correcting an empirically derived Isp by means of analytical corrections. The corrections required are described in the following paragraphs.

2.1.3.1 BATES No Loss Delivered Specific Impulse

BATES "ideal" or no-loss delivered Isp is obtained by adding three major Isp correction factors to the BATES delivered Isp. These are heat flow, two-phase flow, and divergence losses.

Heat flow loss is measured directly using the test stand calorimeter. These heat flow loss effects, as measured in the BATES program, can result in a loss of up to 5-1/2 seconds of Isp.

A typical space shuttle solid rocket booster propellant contains sixteen percent aluminum resulting in an exhaust flow containing approximately thirty-percent solid particulate aluminum oxide (Al_2O_3). These solid particles lag the gaseous flow and cause a performance decrement known as two-phase flow loss. The primary parameters required to calculate this flow loss are size and flow rate of the particles. A correlation for particle size and throat diameter has been adapted from the literature and programmed. This correlation is shown in Figure 2-2 and has been incorporated into the BATES Module. Particle flow rate will be calculated using output from the Lewis Thermochemical Program (Reference 3) which is incorporated as a subroutine in the BATES Isp Module. Once the particle size and flow rate are known, the 1DNØZL program developed by the Air Force (Reference 4) is used to calculate the Isp decrement due to two-phase flow loss. This program has been incorporated into the BATES Isp Module as Subroutine INDØZL.

The final Isp correction to the BATES small motor data, the divergence loss, accounts for the fact that all the exhaust velocities are not parallel to the axis of the nozzle. For a simple conical nozzle this loss is given by:

$$Isp_{div} = \left[1/2 - 1/2\ (\cos \alpha)\right] Isp$$

where Isp = theoretical specific impulse
and α = nozzle half angle.

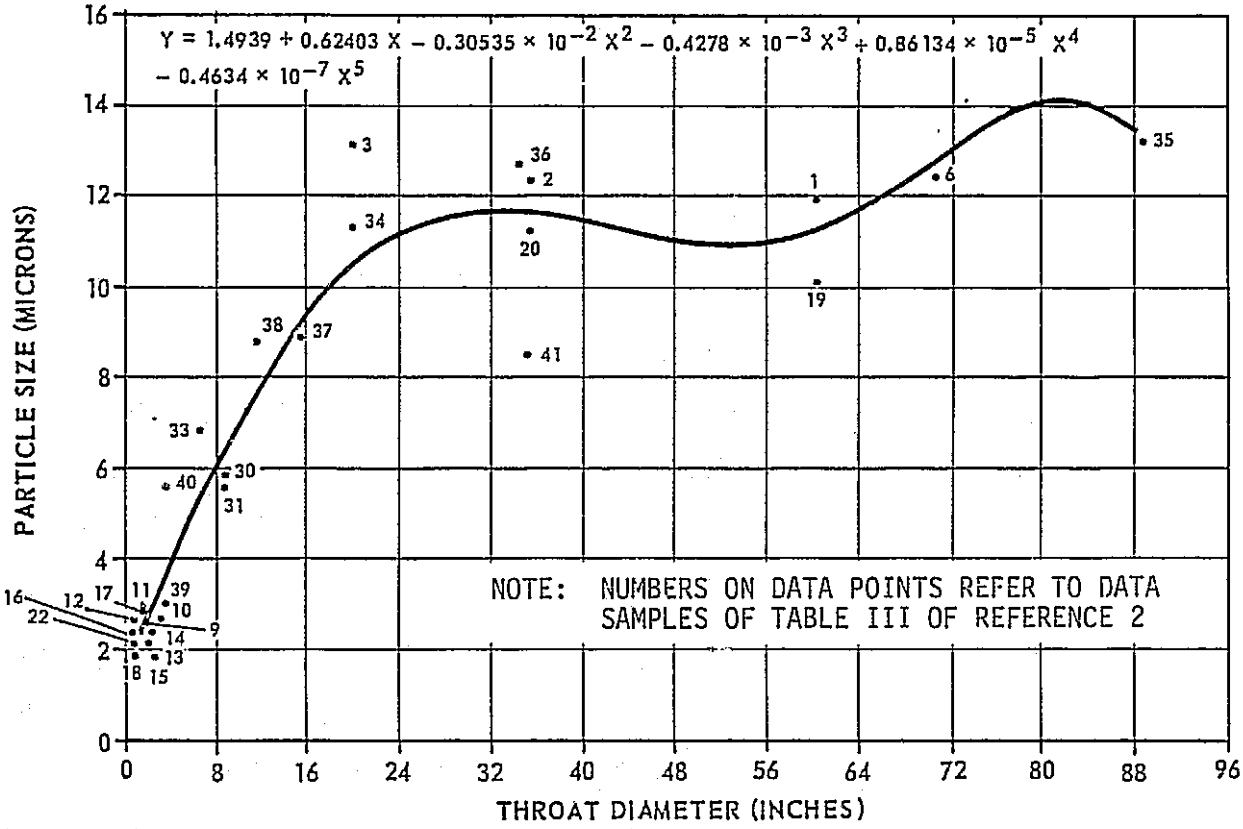

FIGURE 2-2 PARTICLE SIZE VERSUS THROAT DIAMETER

2.1.3.1 (Continued)

This divergence loss calculation has been incorporated in the BATES Module.

The three losses, when combined with the measured BATES Isp, result in the BATES no-loss delivered specific impulse. The BATES module computes a correlation with the theoretical Isp (Lewis Program) for use as a back-up. This provision allows performance extrapolation of similar propellants for which BATES data is not available by providing an estimated no-loss Isp.

2.1.3.2 "End Item" Delivered Specific Impulse and Characteristic Velocity

The basic assumption of the BATES method is that the delivered no-loss Isp of the small test motor is equal to the delivered no-loss Isp of a large motor for a given propellant composition. Therefore, the "end item" delivered Isp is obtained by deducting the large motor Isp losses from the BATES no-loss delivered Isp and then making any necessary expansion ratio corrections. The major large motor losses are two-phase flow loss, heat loss, divergence loss and submergence loss. The two phase flow and heat loss are accounted for in the same manner as the previously described BATES motor losses. Submergence loss is also a required input. When the large motor has a conical nozzle the divergence losses are calculated as described for the BATES motor. If the large motor has a contoured nozzle the divergence loss can be calculated with either of the following methods. The approximate method uses the following equation.

$$ISP_{div} = [\frac{1}{2} - \frac{1}{2}(\cos(\frac{\alpha + \theta_{ex}}{2})] \; ISP$$

where ISP = theoretical specific impulse

α = equivalent conical angle of the contoured nozzle

and θ_{ex} = angle of nozzle contour at the nozzle exit plane measured from the nozzle centerline

The method of characteristics method uses the following equation

$$ISP_{div} = [\frac{1}{2} - \frac{1}{2}(\cos \alpha)] \; [L] \; [ISP]$$

where ISP = theoretical specific impusle

α = equivalent conical angle of the contoured nozzle

and L = ratio fo the theoretical specific impulse of a contoured nozzle to the theoretical specific impulse of an equivalent conical nozzle derived with the ATPAP computer program.

"End Item" motor characteristic exhaust velocity (c^*) is calculated by correcting the theoretical c^* at the nozzle throat. The correction has the form of the ratio of the End Item motor actual ISP at the nozzle throat to the "end item" motor theoretical Isp at the nozzle throat.

2.1.4 Isp Scaling Module (SISCAL)

The Isp Scaling Module calculates "end item" Isp by calculating theoretical Isp and accounting for divergence losses, motor inefficiencies as a function of motor mass flowrate, and nozzle submergence losses. Since this method for calculating Isp requires a very minimum of input data, it is a useful alternate to the BATES technique.

The previously mentioned Lewis computer program is incorporated into the Isp Scaling Module as the means of calculating theoretical specific impulse and characteristic exhaust velocity. The theoretical impulse is corrected for divergence losses as previously described in 2.1.3.2. Motor Isp inefficiencies will be taken into account by using the NASA data (from Reference 5) shown as Figure 2-3. This figure shows the results of many previous motor tests using various size motors with different types of propellant, and indicates that motor Isp efficiency is a function of mass flow rate. These NASA data are used to obtain an efficiency for the SRB simulation in the Isp Scaling Module. The derivation of delivered specific impulse used in the Isp Scaling Module is summarized below:

$$Isp_{del} = (\lambda)\ (\eta_n)\ (\eta_c)\ (\eta_s)\ (Isp_{theo})$$

where λ = nozzle divergence loss factor

η_n = nozzle efficiency factor

η_c = c* efficiency factor

η_s = nozzle submergence loss factor

Isp_{del} = delivered specific impulse

Isp_{theo} = theoretical specific impulse

"End item" motor characteristics exhaust velocity (c*) is calculated by correcting the "end item" motor nozzle throat theoretical c* with the motor c* efficiency η_c and the nozzle submergence factor η_s.

2.1.5 Contractor Data Isp Module (CDSI)

The Contractor Data Isp Module is used to calculate Isp whenever contractor small motor test data for the exact propellant composition is available. Since this data will not contain the information necessary for BATES-type corrections, simplified correction techniques are employed to convert the small motor delivered Isp to "end item" delivered Isp as outlined below:

1. The Lewis program is used to find the theoretical specific impulse (shifting equilibrium) of the propellant formulation for two different conditions:

   (a) The contractor test conditions (Isp 1)

   (b) The "end item" expansion ratio at vacuum conditions (Isp 2)

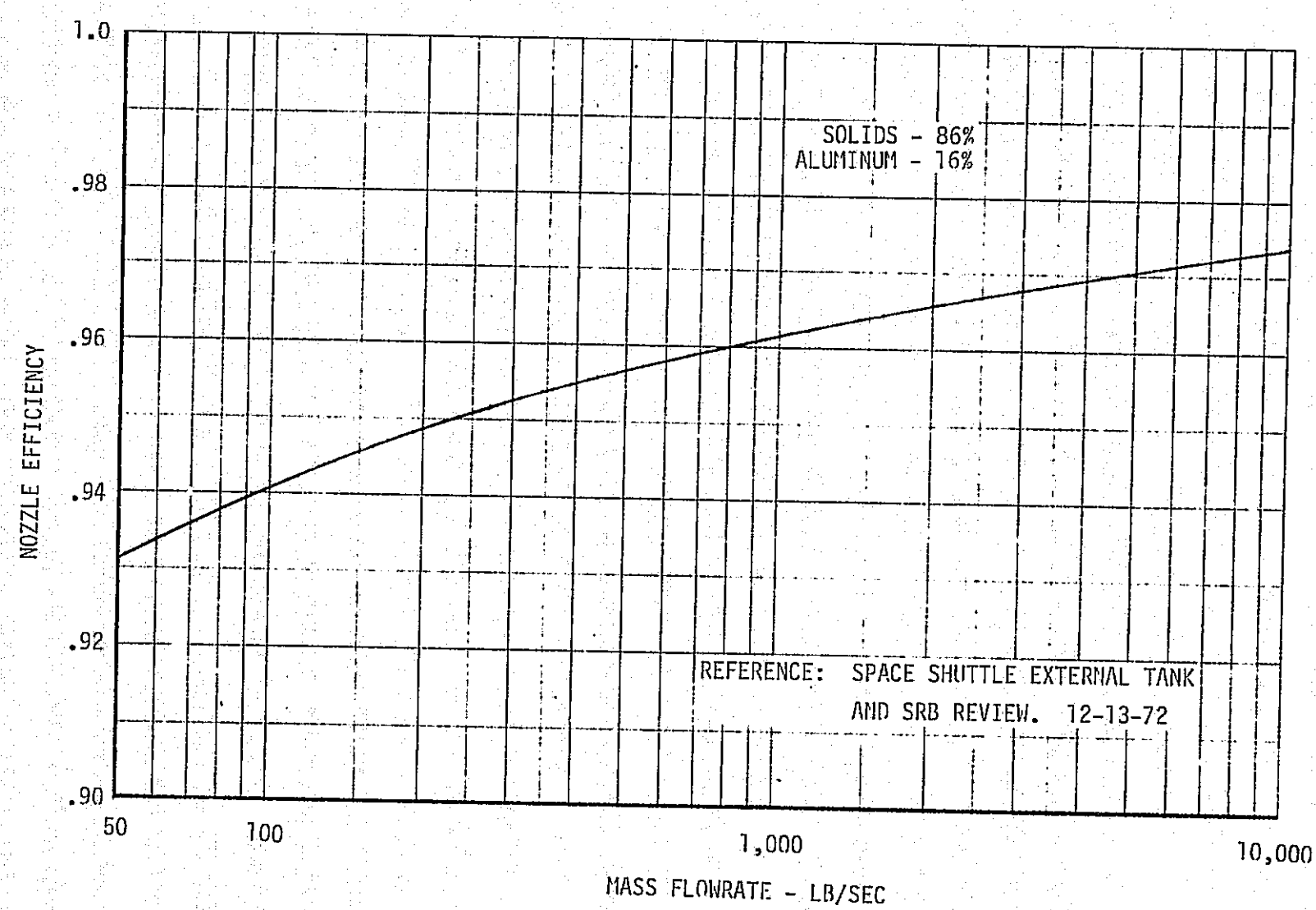

FIGURE 2-3 NOZZLE EFFICIENCY VERSUS MASS FLOWRATE

2.1.5 (Continued)

2. The contractor test motor divergence loss (D1) and the "end item" divergence loss (D2) are calculated.

3. The data from Figure 2-3 are used to find the Isp efficiency for the contractor test motor mass flow rate (ETA1) and "end item" mass flow rate (ETA2). When the "end item" nozzle is submerged, ETA2 is corrected for a nozzle submergence factor.

4. The "end item" vacuum Isp is predicted as follows:

$$Isp_{vac}\ (\text{end item}) = Isp_{test} \cdot \frac{Isp\ 2}{Isp\ 1} \cdot \frac{Isp\ 2 - D2}{Isp\ 1 - D1} \cdot \frac{ETA2}{ETA1}$$

The "end item" motor c* is calculated by correcting the contractor test motor theoretical c* by the ratio of the Isp efficiency (ETA2/ETA1).

2.1.6 Internal Ballistics Module (IBM)

The Internal Ballistic Module is a major portion of SRB-II. IBM is used to calculate significant SRB propulsion performance parameters. The basis for this module is the Boeing Internal Ballistics Program (Reference 6).

The Internal Ballistics Module will:

(a) Generate nominal flow rate, chamber pressure, and thrust histories as a function of time.

(b) Evaluate propellant mass and volume.

(c) Utilize actual grain dimensions.

(d) Evaluate burning rate scale-up effects.

(e) Evaluate the changes in nozzle throat area as a function of time.

(f) Utilize nozzle efficiency factors as a function of time.

(g) Generate moments of inertia and center of gravity histories of solid propellant grains.

(h) Match burning rate with measured head-end pressure for buildup prediction and performance reconstruction.

2.1.6 (Continued)

The Internal Ballistics Module can be used in conjunction with the "Inert" Mass Module to evaluate the effects of "inert" mass expenditures as a function of time. The Dispersion Module can be used in conjunction with the Internal Ballistics Module to generate performance dispersions based on probable variations in selected performance variables. IBM is used in conjunction with the Reconstruction Module to analyze performance data from flight and static test.

The module calculations are based on either of the motor configurations shown in Figure 3-13. This figure shows examples of the geometrical models for a monolothic, tapered grain motor and a segmented grain motor. The motor configuration is divided into three sections: the head-end section (forward dome), the cylindrical section, and the aft-head section (aft-dome). The grain geometry is described with input reference planes within the cylindrical section. The cylindrical section is further divided into a number of increments or mass addition regions by the location of increment dividing planes. These dividing planes are located at each reference plane, and at specified intervals (Δ Z) from each reference plane, until either a segment slot interface or the next reference plane is passed. During the computer solution of the internal ballistics, the port perimeter, port cross sectional area, and moments of inertia are determined at each increment dividing plane by linear interpolation between adjacent reference planes. Mass addition is assumed to occur as a step process between two successive increment dividing planes.

In general, the major inputs required by the Internal Ballistics Module are dimensions and geometry factors to describe the motor case, nozzle and propellant grain, and the propellant characteristics. Propellant characteristics include density, specific heat ratio, gas constant, molecular weight, characteristic exhaust velocity, and coefficients and exponents for the burn rate equation which is an expanded form of

$$R_B = a(P_c)^n.$$

where R_B = propellant burn rate

a = propellant burn rate coefficient

n = propellant burn rate exponent

and P_c = motor chamber pressure

2.1.6 (Continued)

The module is concerned with the burning characteristics and progression of the propellant surface, and the dynamics of the gas generation and gas flow in the interior of solid propellant rocket motors. The solution of the internal ballistics requires the geometric analysis of the grain design to determine the burning surface area and propellant volume, and the physical analysis of the gas flow through the port cavity and nozzle to determine motor performance.

The Internal Ballistics Module can be used to analyze a large variety of propellant grain configurations. Also, numerous simulation options are available. Figure 2-4 presents some of the more important capabilities of the Internal Ballistics Module.

2.1.7 Thrust Scaling Module (FSCAL)

The Thrust Scaling Module provides an alternate performance prediction technique which can be utilized when sufficient data are not available for running the more sophisticated Internal Ballistics Module, or when a quick, cost effective, relatively simple technique of determining motor performance is desired. The user of this technique must realize that it is only an approximate method of deriving the parameters and is only valid for small perturbations about the nominal. The Thrust Scaling Module will scale a nominal performance versus time curve to compensate for variations in burn time and propellant mass for a particular solid propellant motor.

2.1.8 "Inert" Mass Module (INERT)

The "Inert" Mass Module will predict "inert" mass flow rate and "inert" mass thrust contribution. "Inert" mass accounting is required because the total mass expended by a solid rocket motor exceeds the propellant mass. The excess is considered expended "inert" mass and is made up primarily of insulation and ablative material contained in the motor interior and nozzle throat. This expended mass has a slight influence on thrust and a significant influence on motor mass versus time. SRB-II contains an "Inert" Mass Module which scales the "inert" mass remaining onboard by proportioning "inert" mass to propellant mass remaining. "Inert" mass flowrate is calculated from the mass overboard schedule, and then "inert" thrust contribution is calculated from the "inert" mass flowrate and the input "inert" Isp. "Inert" effects are added to appropriate parameters from either IBM or FSCAL before output in the Output Module.

- MODULE CALCULATES MAJOR PERFORMANCE PARAMETERS
  - THRUST
  - CHAMBER PRESSURE
  - FLOWRATE
  - MASS REMAINING
  - MOMENTS OF INERTIA
  - CENTER OF GRAVITY
  - TOTAL IMPULSE

MAJOR PERFORMANCE PARAMETERS

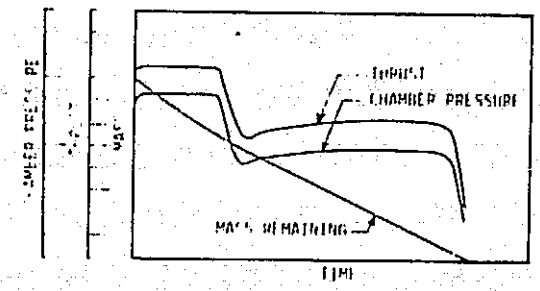

- USER CAN INPUT MONOLITHIC OR SEGMENTED MOTOR WITH NUMEROUS GRAIN DESIGNS
  - CIRCULAR
  - STAR
  - SLOTTED-CONE
  - WAGON WHEEL
  - FORKED WAGON WHEEL
  - TABULAR INPUT: OTHER CONFIGURATIONS POSSIBLE BY INPUTTING TABLES OF PORT PERIMETER VS. DISTANCE BURNED
- MODULE SIMULATES BUILDUP, STEADY STATE, AND TAILOFF PERFORMANCE
- ADDITIONAL OPTIONS
  - ACCELERATION-DEPENDENT BURNING RATES
  - ANISOTROPIC PROPELLANT BURNING
  - NOZZLE EROSION
  - INERT SLIVERS
  - EROSIVE PROPELLANT BURNING
  - TAPERED PROPELLANT GRAINS

FIGURE 2-4 MAJOR INTERNAL BALLISTICS MODULE CAPABILITIES

2.1.8 (Continued)

Required inputs are SII, AMIRR(I), AMPRR(I), NP(10), MITØT, AND MPTØT (If NF=0). Data for these variables is provided through BLØCK DATA or NAMELIST INPUT1 of the CØNTRØL DATA PACKAGE. For definitions, see Table 3-XIII.

2.1.9 Flight and Static Test Reconstruction Module (RECØN)

The Reconstruction Module will accurately analyze the data resulting from both static tests and flight tests of the Space Shuttle SRB motors. Reconstruction of both flight and static test data is based on the technique which forces the prediction routine to produce a match between calculated and measured values of certain critical parameters.

2.1.9.1 Static Test Reconstruction

Reconstruction of the SRB motor static tests is accomplished through the use of a progressing time step algorithm which requires the calculated burning area to be consistent with the measured chamber pressure using the Internal Ballistics Module to force the match at each time step. As a result of this matching process, a history of motor mass flow rate and mass overboard is produced.

2.1.9.2 Flight Reconstruction

The flight reconstruction is accomplished through the use of a progressing time step algorithm which requires the calculated burning area to be consistent with measured chamber pressure using the Internal Ballistics Module to force the match. As a result of this matching process, a history of motor mass flowrate and mass overboard is produced.

Reconstruction of flight parameters using acceleration as the basis has been established as the most accurate method for evaluating solid booster flight performance. For the Shuttle, acceleration matching is complicated by simultaneous burning of the two solid boost motors and the three liquid main engines. Reconstruction is further complicated due to the aerodynamic forces generated by the complex shuttle configuration. In order to establish the contribution of the solid booster motors to the instantaneous vehicle acceleration, and thus establish the SRB total thrust, it is necessary to apply Newton's second law to the vehicle in some specified direction. The resulting equation is then solved for total solid motor thrust and may be expressed as:

$$F_{SRM} = (M_{VEHICLE}\ A_{MEASURED}) - F_{VEHICLE}$$

2.1.9.2 (Continued)

where F_{SRM} = The sum of thrust produced by solid motors in the specified direction

$M_{VEHICLE}$ = Instantaneous total mass of the vehicle

$A_{MEASURED}$ = Measured acceleration in the specified direction

$F_{VEHICLE}$ = Summation of all forces acting on the vehicle in the specified direction excluding F_{SRM}

Instantaneous total mass, $M_{VEHICLE}$, is calculated from an input vehicle mass history which will be the summation of the masses of all vehicle components, excluding the solid rocket motors, summed with the results of a mass balance performed on the solid rocket motors. This SRB mass balance is accomplished by algebraically summing the initial solid motor masses with the integral of the existing mass flow rates calculated in the Internal Ballistics Module. Parts of the $F_{VEHICLE}$ term are required input items and include liquid engine thrust, aerodynamic forces, an estimated thrust for the motor not being reconstructed in the run and any other forces acting on the vehicle in the specified direction.

2.1.10 Dispersion Module (DISP)

The Dispersion Module perturbs independent casual variables such that the effects of these perturbations are seen in the critical output quantities such as thrust, Isp, and mass flowrate of the solid rocket motors. Perturbations are made on single IBM input variables such as nozzle erosion rate, propellant density or characteristic velocity while all other variables are held at their nominal values. Thus, a complete set of dispersion predictions can be generated by utilizing SRB-II.

2.1.11 Output Module (ØUTPUT)

The Output Module is capable of producing data in the following three forms: tabulated computer printout, seven and nine track-performance data tapes (UNIVAC 1108 version generates seven track tapes while IBM-370 version generates nine track tapes) and plot tapes, and punched data cards. The last two items are optional outputs and their generation are determined by setting input indicators. The following paragraphs describe the three output methods available in this Module.

2.1.11.1 Tabulated Computer Printout

The tabulated computer printout, controlled by the Output Module, will provide the user with tabulated data of performance parameters. The

2.1.11.1 (Continued)

format of the printout displays key performance parameters. Variables of special interest may be obtained at the user's discretion by setting the appropriate indicators in the input data packages.

A two part tabulated printout will be made for all computer runs. The first part will consist of both the input data entered through the Centralized Input Module and the results of all initial calculations. The second part of the printout will contain performance parameters and variables for the entire simulation. The printout time increment will vary for the ignition transient, web time, and thrust decay portions of the simulation and will be determined by an input NAMELIST indicator. Typical output for SRB-II is given in Section 4.0.

2.1.11.2 Performance Data Tapes

The user has the option to set an indicator which will require the model to generate a data tape. If the indicator is set, the program automatically records the desired data on magnetic tape at predetermined time increments for the ignition transient, web time and thrust decay portions of the simulation.

2.1.11.3 Plot Tapes

Plot tapes created by the Output Module are an intermediate step in obtaining hard copy plots. The model generated tape can be reformatted into a plot tape using existing Benson and Lerner (B/L) or MSFC SC 4020 Plot Programs. The hard copy plots can then be plotted on the B/L or SC 4020 plotter.

2.1.11.4 Punched Data Cards

The third Output Module option available is punched data cards. The punched data cards are output when an indicator is set in the input data. Contents and format of the punched card output variables are discussed in Section 4.0.

2.1.12 Nozzle Submergence and Contour Effects Module (NSCE)

The Nozzle Submergence and Contour Effects Module simulates the effects of nozzle contour and submergence on the internal ballistics and overall performance of a solid rocket motor. Contour effects are simulated using functional modeling techniques which account for changes in performance due to nozzle expansion section shape. Effects of submerging the nozzle entrance section in the motor grain are modeled using both analytical and functional simulation techniques to account for changes in motor internal flow field and performance. Results from both contour and submergence simulations are transmitted to the Internal Ballistics Module where computations for critical output parameters such as thrust, specific impulse, flowrate, mass accounting and center of gravity are made.

2.2 VARIABLE AND CONSTANT NAMES

The variable and constant names used in development of SRB-II are consistent in all modules developed totally during the SRB-II effort and are designed to make the program easier to use from an engineering standpoint. The following paragraphs outline the rules followed in developing the variables and constant names in all SRB-II Modules except the Internal Ballistics Module and Subroutines LEWIS and IDNØZL. These parts of SRB-II were developed prior to incorporation in the model.

2.2.1 Common Storage

The form of Common Block Names will be CØMMON/BLKnnn/, where nnn is the assigned sequence number starting with 001 and progressing in steps of one. Normally, only five variable names are put on the original Common card.

2.2.2 FORTRAN Statement Numbers

Subroutines have sequential statement numbers in increments of 10, i.e.

```
10    IF (X.LT.A) GØ TØ 20
      B = C
      GØ TØ 30
20    B = D
      C = F
30    E = B * C
```

If later corrections are to be inserted, statement numbers "split the difference" in existing statement numbers, i.e., a statement number inserted between 10 and 20 would be 15, between 10 and 15 then would be 12, etc.

2.2.3 FORTRAN Nomenclature

The first letter of each nomenclature term generally defines the term and adheres to the following list where practical.

SYMBOL	DEFINITION
A	area, angle, array, acceleration, altitude, (the last letter of A indicates the predicted value)
C	coefficients, constants, specific head, C*, C_F, CG
D	diameter, density, delta, distance or length

2.2.3 (Continued)

SYMBOL	DEFINITION
E	efficiency, expansion ratio
F	thrust, force, fuel
G	gamma
H	height
I	fixed point indicator
J	fixed point indicator
K	fixed point indicator
L	fixed point indicator
M	M will be made REAL,(i.e., floating point), mixture ratio (MR), mass, mass flowrate (MF), moment, mach number
N	fixed point indicator
Ø	oxidizer
P	pressure, percent, propellant
Q	heat transfer
R	radial distance, burn rate (RB)
S	specific impulse (SI), stage
T	temperature, time, total impulse
V	volume, velocity
W	weight
X	the last letter of X means in the X direction
Y	the last letter of Y means in the Y direction
Z	the last letter of Z means in the Z direction or the previous value of a parameter

2.2.4 FORTRAN Constants

The constants used in SRB-II have been assigned names according to the following list.

AK(I)	curve fit constants
CK(I)	universal constants
DK(I)	distance or dimension constants
IK(I)	fixed point indicators
MC(I)	motor constants and tag values (floating point)
MK(I)	mass constants (floating point)
ØK(I)	odd constants
PK(I)	propellant characteristic constants
TK(I)	time constants

2.2.5 Program Indicator Concepts

Indicators which are used specifically for one module will begin with I followed by a three letter abbreviation of the module and a counter number, i.e. an indicator for the BATES Module might be

IBAT01

Indicators which are used generally or in the Executive Module will begin with N and have a descriptive name such as

NISP
NRECØN
NDISP .

2.3 SRB-II OVERLAY STRUCTURE

The development of an overlay structure for SRB-II was required in an attempt to meet the MSFC UNIVAC 1108 core storage restriction of 32,000 words at any given time.

The SRB-II overlay for the IBM 370 and UNIVAC 1108 versions of the program are shown in Figures 2.5 and 2.6, respectively. One section (left side of tree shown in the figures) contains the Isp scaling modules and the necessary subroutines for these modules. The other section (right side of tree shown in the figures) contains the Internal Ballistic Module and necessary subroutines for this module. The routines shown in the section with MAIN (Executive Module) remain in core at all times during a computer run.

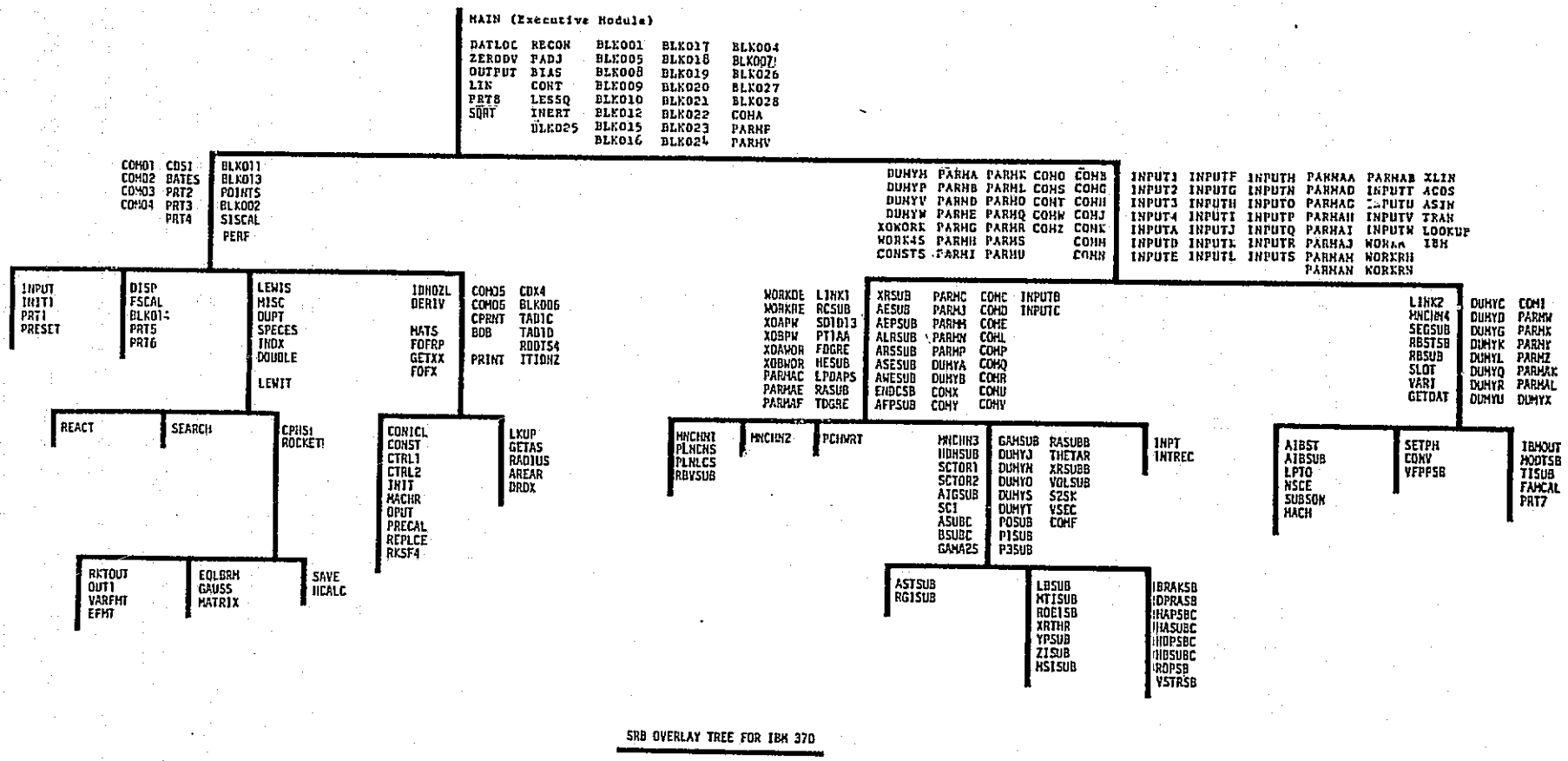

SRB OVERLAY TREE FOR IBM 370

FIGURE 2-5 SRB-II OVERLAY TREE FOR THE IBM 370 COMPUTER SYSTEM

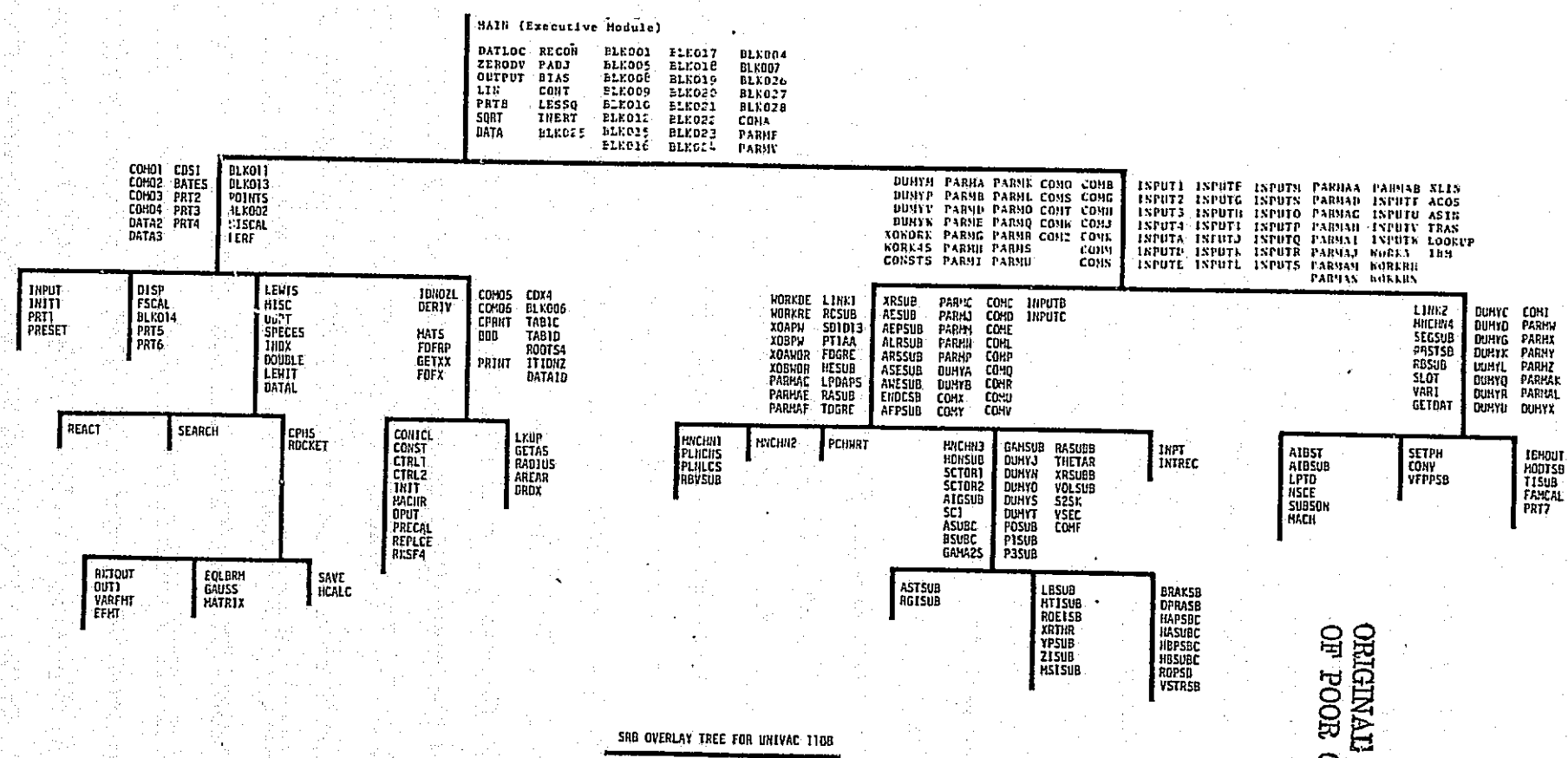

SRB OVERLAY TREE FOR UNIVAC 1108

FIGURE 2-6 SRB-II OVERLAY TREE FOR THE MSFC UNIVAC 1108 COMPUTER SYSTEM

ORIGINAL PAGE IS OF POOR QUALITY

SECTION 3

3.0 PROGRAM INPUT DATA

The input data for the SRB Performance Evaluation Model (SRB-II) consist of variable values compiled as an integral part of the program (BLØCK DATA), data input from punched cards, and data read from magnetic tape. All card inputs to SRB-II are arranged in input data packages and processed through the Centralized Input Module. Magnetic tape inputs are accessed by the subroutine requiring the data. BLØCK DATA subroutines are discussed in paragraph 3.1.1. Magnetic tape inputs are discussed in paragraphs 3.1.4 and 3.3. The remainder of Section 3 is devoted to a description of the punched card input required by SRB-II for successful operation of the program.

3.1 DATA INPUT METHODS

SRB-II uses four methods for transmitting data to the program modules. The data input methods are:

1) BLØCK DATA
2) NAMELIST
3) Set Format Cards
4) Set Format Magnetic Tape

3.1.1 BLØCK DATA

The BLØCK DATA method consists of storing input data directly in the performance model using BLØCK DATA subroutines. The data in these subroutines are stored in the computer memory during program compilation and are available to the module requiring the data. The BLØCK DATA subroutines form an integral part of the SRB performance model and consist principally of tabulated data for independent and dependent parameters. Nominal motor performance parameter values, booster constants, program indicators, dispersion limits, and empirical coefficients are contained in the BLØCK DATA subroutines. The BLØCK DATA method is augmented by the NAMELIST method.

3.1.2 NAMELIST

The NAMELIST method is the primary method of entering input data into the model using punched cards. This method, when used in conjunction with BLØCK DATA subroutines, is in most cases superior to field formatted input methods because: strict arrangement of data is not required; the number of data cards is significantly reduced since only parameters subject to changes in value need to be entered; and field format violations are eliminated since both the name and value of the parameter are entered. NAMELIST can be used to override the assigned value of any BLØCK DATA variable, thus avoiding the need to recompile the computer program for each BLØCK DATA change.

3.1.2 (Continued)

A NAMELIST variable may be in the form of a subscripted array or a single valued variable. The value of the NAMELIST variable may be integer, real, literal, complex, hexadecimal, or logical. Examples of some of these variables are given below:

Single valued variable: GAMMA = 1.160,

Single subscripted variable: THRUST(1) = 2400000.0, or
ISP (1) = 276.16,

Multiple valued array: THRUST(1) = 2400000.0, 2410000.0,
In this example THRUST(2) = 2410000.0

Logical variable: STATIC = .TRUE.

3.1.3 Set Format Cards

As noted in paragraph 3.1.2, the NAMELIST method for data input is superior to set format input in most cases. One example of a situation in which this is not true is the handling and sorting of large quantities of alpha-numeric data. This situation occurs in inputs for the LEWIS subprogram; inputs consist largely of alpha-numeric data which identify the propellant chemical composition. The LEWIS input data are the only SRB-II card input requiring set formats.

A discussion of the data required for the LEWIS subprogram and the set format for these data are presented in paragraph 3.2.2.

3.1.4 Set Format Magnetic Tape

Magnetic tape inputs to SRB-II are restricted to reconstruction data and LEWIS thermodynamic data. A discussion of data required for reconstruction and the set format for this tape is presented in paragraph 3.3.

Execution of the LEWIS subroutine to obtain theoretical rocket performance parameters requires that the LEWIS THERMO data tape be available to the program. This tape is included in the MSFC tape library as tape number 23810. The format and contents of this tape are given in Appendix A.

3.2 PROGRAM INPUT DATA PACKAGES

Card inputs for SRB-II are arranged in data packages. These data packages are processed and transferred to disk by the Centralized Input Module. Incorporation of this data package concept gives the user flexibility in assembling and arranging the input data required for execution of the program.

3.2 (Continued)

Data for SRB-II are arranged in as many as four data packages per case. These packages are shown graphically in Figure 3-1 for a case data deck. The Identification Control Cards for each data package must be arranged in the data package in precisely the order shown; however, the data packages may be input in random order for each case. Data packages not required for a case may be excluded in the data deck for that case. It is also permissable to include a data package in the case data deck which is not required for that case (data are ignored by the program). A "CASE END" card (see Table 3-I) is required as the last card for each SRB performance case data deck.

3.2.1 Control Data Package

The Control Data Package is the input route by which data for the majority of SRB-II modules and subprograms are transmitted to the program (Exceptions: data for the LEWIS Subroutine, the One-Dimensional Nozzle Subroutine, the Nozzle Submergence and Contour Effects Module, and the Internal Ballistics Module are input in separate data packages). Program indicators which control the path followed through the program and options exercised in the program are also input through the Control Data Package. (Exception: Internal Ballistics and Nozzle Submergence and Contour Effects indicators input in the IBM Data Package). The Control Data Package must be included in every case.

Control Data Package contains only the NAMELIST INPUT1. No other NAMELISTS or set format data are included in the data package. Variables input through the Control Data Package are identified and defined in the Program Options Section (paragraph 3.4).

3.2.2 Lewis Data Package

The Lewis Data Package is required for use when the option to exercise the LEWIS Subroutine is chosen (NLEWIS > 0). The LEWIS Subroutine is used to calculate the theoretical values of I_{sp}, c* and nozzle exit pressure, as well as several other theoretical solid rocket motor performance parameters. LEWIS Subroutine is a modification of the CEC71 computer program developed by NASA Lewis Research Center (documented in Reference 3). The CEC71 program was modified to fit the requirements of the SRB performance model by removing all options not required to analyze rocket problems. The program was then reduced in an effort to meet the core size requirements of the MSFC UNIVAC 1108 operating rules.

The Lewis Data Package consists of set format input data cards. This data package is the only card input in the SRB model which is in set format rather than NAMELIST format. Formatted input data are required to provide the user with an efficient manner of supplying the needed

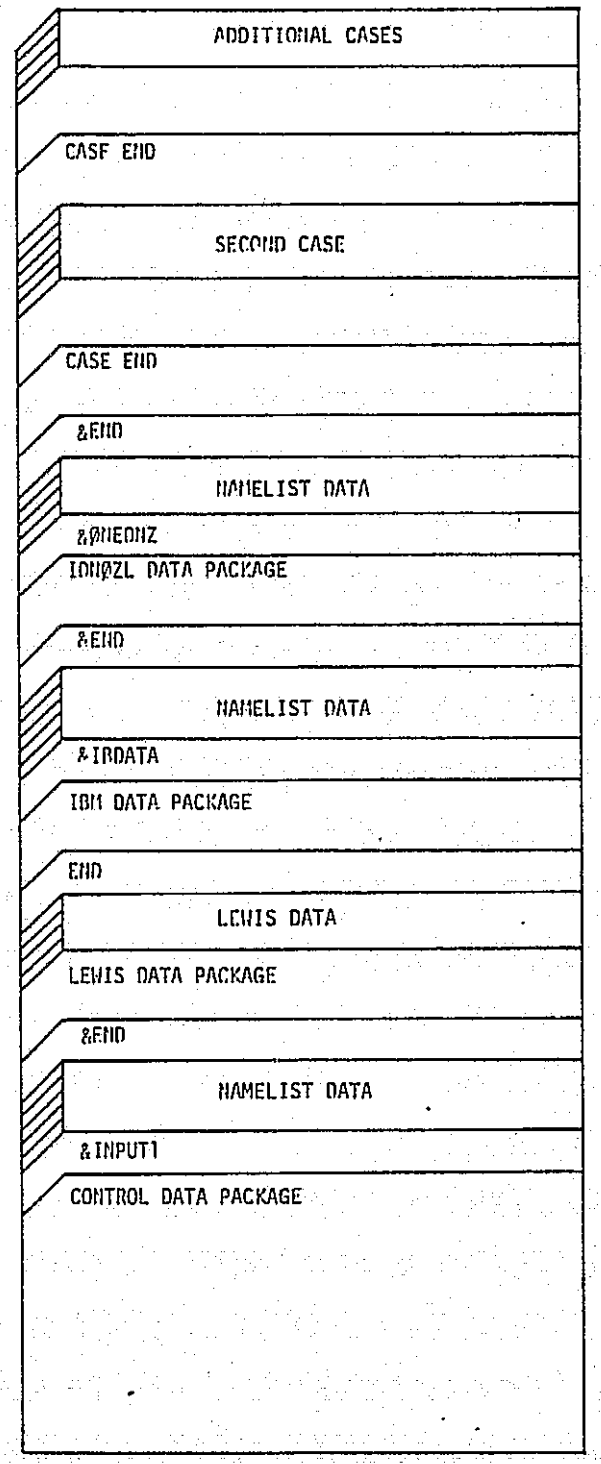

FIGURE 3-1 INPUT DATA PACKAGE ARRANGEMENT

TABLE 3-I IDENTIFICATION CONTROL CARDS FOR DATA PACKAGES

REQUIRED WORDS	COMMENTS
CØNTRØLƀDATA	IDENTIFIES CONTROL DATA PACKAGE
LEWISƀDATA	IDENTIFIES LEWIS DATA PACKAGE
END	SIGNIFIES THE END OF LEWIS DATA PACKAGE
IBMƀDATA	IDENTIFIES THE IBM DATA PACKAGE
IDNØZLƀDATA	IDENTIFIES THE ONE-DIMENSIONAL NOZZLE DATA PACKAGE
CASEƀEND	SIGNIFIES END OF DATA FOR A CASE

All Identification Control cards start in card column 1. After the Required Words are punched, the remainder of the card is available to the user for data identification and comments.

NOTE: ƀ is a Blank Character.
Ø is the alphabetic letter O.

3.2.2 (Continued)

parameters to the program. Data cards in the package are identified as follows:

Package Identification Card
REACTANTS Card and Species Cards
INSERT Cards
ØMIT Cards
END Card

A typical Lewis Data Package is shown in Figure 3-2.

Package Identification Card - The package identification card is required to let the program know that Lewis subroutine data are available and to flag out this data to the input processor. The package identification card is the first card in the package and consists of the words LEWISØ DATA punched in card columns 1 through 10. Card columns 11 through 80 are available to the user for free format identification of the package.

REACTANTS Card and Species Cards - The first card in this set contains the word REACTANTS punched in card columns 1 to 9. The last card in the set is blank. Between the first and last cards may be any number of cards (up to a maximum of 15), one card for each reactant species being considered. The cards for each reactant species must give the chemical formula, the relative amount of the reactant, and the initial enthalpy value. The format and contents of the cards are summarized in Table 3.II. A list of some REACTANTS cards is given in Table 3.III. A set of example REACTANTS and Species cards are shown in Figure 3.3.

The relative amounts of reactants may be specified in several ways. They may be specified in terms of moles, mole fraction, or mole percent (by keypunching M in card column 53) or in terms of weight, weight fraction, or weight percent (blank in column 53). A letter F is required in card column 72 of all reactant species cards. This indicates to the program that this is a solid rocket problem.

Enthalpies are taken from the reactant species cards unless zeros are punched in card columns 37 and 38. For each card with the "00" code, an enthalpy will be calculated for the species from tape input data for the temperature given in card columns 64 to 71. The automatic calculation option is available only if two conditions are met:

(1) The reactant must also be one of the species in the set of THFRMO data. For example, $NH_3(g)$ is in the set of THERMO data and the enthalpy for this species can be calculated, $NH_3(l)$ does not appear in the list and enthalpy cannot be calculated.

```
END
INSERT AL2Ø3(L)
                    BLANK CARD
FE   1.0    0.525        0.0      S    298   F
N    1.0    8.412999     0.0      S    298   F
CL   1.0   20.821991   -77609.4   S    298   F
Ø    1.0   39.103989     0.0      S    298   F
H    1.0    3.938        0.0      S    298   F
AL   1.0   15.007        0.0      S    298   F
C    1.0   12.191        0.0      S    298   F
REACTANTS
LEWIS DATA FOR AEROJET 260-SL PROP.
```

FIGURE 3-2 TYPICAL LEWIS DATA PACKAGE

TABLE 3-II REACTANTS CARDS

ORDER	CONTENTS	FORMAT	CARD COLUMNS
First	REACTANTS	3A4	1 to 9
Any	One card for each reactant species (maximum 15). Each card contains:		
	(1) Atomic symbols and formula numbers (maximum 5 sets)[a]	5(A2, F7.5)	1 to 45*
	(2) Relative weight[b] or number of moles	F7.5	46 to 52
	(3) Blank if (2) is relative weight or M if (2) is number of moles	A1	53
	(4) Enthalpy or internal energy[a], cal/mole	F9.5	54 to 62
	(5) State: S,L,or G for solid, liquid or gas, respectively	A1	63
	(6) Temperature associated with enthalpy in (4) °K	F8.5	64 to 71
	(7) F if fuel or Ø if oxidant	A1	72
	(8) Density in g/cm^3 (optional)	F8.5	73 to 80
Last	Blank		

[a]Program will calculate the enthalpy or internal energy (4) for species in the THERMO data at the temperature (6) if zeros are punched in card columns 37 and 38.

[b]Relative weight of fuel in total fuels or oxidant in total oxidants. All reactants must be given either all in relative weights or all in number of moles.

*Atomic Symbols start in columns 1, 10, 19, 28, 37.

TABLE 3-III LIST OF REACTANTS CARDS FOR SOME OXIDANTS & FUELS

CHEMICAL	CHEMICAL FORMULA (CARD COLUMNS 1 to 45)	Percent (cc 54-62)	ASSIGNED ENTHALPY, cal/mole (cc 54-62)	(a)	TEMPERATURE K (cc 64-71)	(b)	DENSITY, G/cm^3 (cc 73-80)
Acetonitrile	C 2. H 3. N 1.	100.	12800.	L	298.15	F	.7857
Acetylene	C 2. H 2.	100.	49270.	L	192.60	F	.610
Air	N 1.561760 .41959 AR.009324C .000300	100.	-28.2	G	298.15	O	
Aluminum	AL1.	100.	0.0	S	298.15	F	2.702
Ammonia(g)	N 1. H 3.	100.	-10970.	G	298.15	F	
Ammonia(l)	N 1. H 3.	100.	-17090.	L	239.72	F	.676
Ammonium perchlorate	N 1. H 4. CL1. O 4.	100.	-70690	S	298.15	F	1.95
Aniline	C 6. H 7. N 1.	100.	7100.	L	298.15	F	1.02173
Argon	AR1.	100.	0.0	G	298.15	F	
Benzene	C 6. H 6.	100.	+11718.	L	298.15	F	.8737
Beryllium	BE1.	100.	0.0	S	298.15	F	1.85
Butane	C 4. H 10.	100.	-36080.	L	272.65	F	.6012
1-butene	C 4. H 8.	100.	-5800.	L	266.9	F	.6263
Chlorine(g)	CL2.	100.	0.0	G	298.15	O	
Chlorine(l)	CL2.	100.	-5391.	L	239.09	O	1.56
Chlorine trifluoride(g)	CL1. F 3.	100.	-39000.	G	298.15	O	
Chlorine trifluoride(l)	CL1. F 3.	100.	-45680.	L	284.55	O	1.8517
Cyanogen(g)	C 2. N 2.	100.	+73840.	G	298.15	F	
Cyanogen(l)	C 2. N 2.	100.	67655.	L	252.01	F	.9537
Diborane	B 2. H 6.	100.	4970.	L	180.59	F	.4371
Ethane	C 2. H 6.	100.	-25008.	L	184.52	F	.5464
Ethyl alcohol	C 2. H 6. O 1.	100.	-66370.	L	298.15	F	.7893
Ethylene	C 2. H 4.	100.	8100.	L	169.44	F	.5688
Ethylene oxide	C 2. H 4. O 1.	100.	-18840.	L	283.72	F	.8824
Ethylene polymer	C 1. H 2.	100.	-6100.	S	298.15	F	.935
Fluorine(g)	F 2.	100.	0.0	G	298.15	O	
Fluorine(l)	F 2.	100.	-3098.	L	85.02	O	1.505
Graphite	C 1.	100.	0.0	S	298.15	F	2.25
Helium	HE1.	100.	0.0	G	298.15	F	
Heptane	C 7. H 16.	100.	-53630.	L	298.15	F	.67951
Hydrazine	N 2. H 4.	100.	12100.	L	298.15	F	1.0036

[a]Phase: S, solid; L, liquid; G, gas.

[b]Fuel, F; oxidant, Ø.

[c]Based on the following molar percents: N_2 = 78.0881, $Ø_2$ = 20.9495, Ar = 0.9324, $CØ_2$ = 0.0300.

[d]Estimate based on paraffin hydrocarbon series.

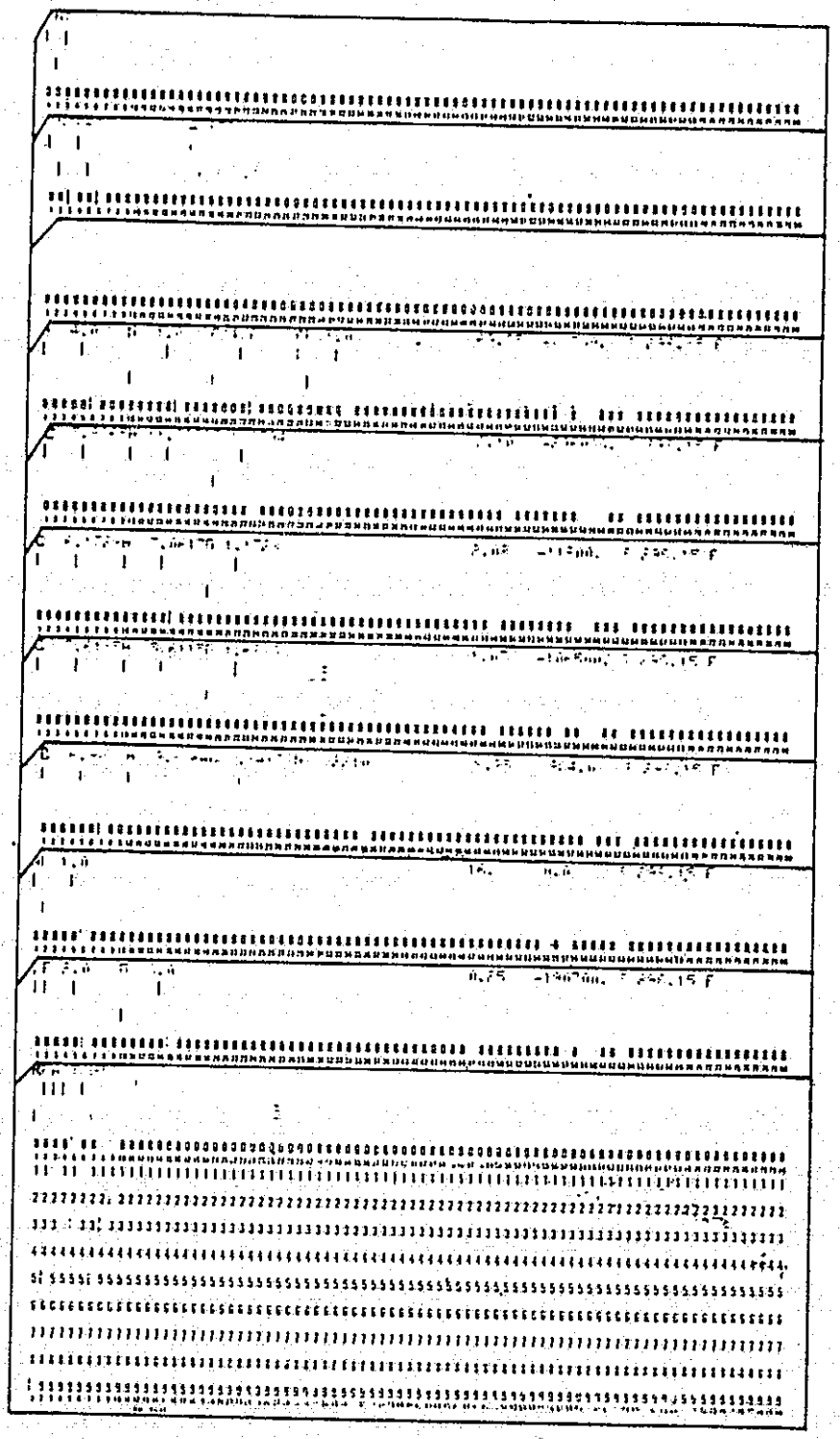

ORIGINAL PAGE IS
OF POOR QUALITY

FIGURE 3-3 TYPICAL REACTANTS AND SPECIES CARDS FOR LEWIS DATA PACKAGES

3.2.2 (Continued)

(2) The temperature T must be in the range $T_{low}/1.2 \leq T \leq T_{high} \times 1.2$ where T_{low} to T_{high} is the temperature range of the THERMO data.

The set of species data as well as the temperature range for the data is documented in Reference 3 and is presented in Appendix A.

ØMIT and INSERT Cards - ØMIT and/or INSERT cards may follow the REACTANTS cards. Their inclusion is optional. They contain the names of particular species in the library of thermodynamic data for the specific purposes to be discussed. Each card contains the word ØMIT (in card columns 1 to 4) or INSERT (in card columns 1 to 6) and the names of from one to four species starting in columns 16, 31, 46, and 61. The names must be exactly the same as they appear in the THERMO data (see Appendix A).

ØMIT cards - These cards list species to be omitted from the THERMO data. If ØMIT cards are not used, the program will consider as possible species all those species in the THERMO data which are consistent with the chemical system being considered. Occasionally it may be desired to specifically omit one or more species from considerations as possible species. This may be accomplished by means of ØMIT cards.

INSERT cards - These cards contain the names of condensed species only. They have been included as options for two reasons.

The first and more important reason for including the INSERT card option is that, in rare instances, it is impossible to obtain convergence for rocket problems without the use of an INSERT card. This occurs when, by considering gases only, the temperature becomes extremely low (say several degrees Kelvin). In these rare cases, the use of an INSERT card containing the name of the required condensed species will eliminate this kind of convergence difficulty. When this difficulty occurs, the following message is printed by the program: "LOW TEMPERATURE IMPLIES CONDENSED SPECIES SHOULD HAVE BEEN INCLUDED ON AN INSERT CARD".

The second and less important reason is that if one knows that one or several particular condensed species will be present among the final equilibrium compositions for the first assigned point, then a small amount of computer time can be saved by using an INSERT card. Those condensed species whose chemical formulas are included on an INSERT card will be considered by the program during the initial iterations for the first assigned point.

3.2.2 (Continued)

If the INSERT card were not used, only gaseous species would be considered during the initial iterations. However, after convergence, the program would automatically insert the appropriate condensed species and reconverge. For all other assigned points the inclusion of condensed species is handled automatically by the program. Therefore, it usually is immaterial whether or not INSERT cards are used for the purpose of saving computer time.

END card - The END card signifies the end of the Lewis Data Package to the program and consists of 1 card with the word END punched in card columns 1 through 3. The END card is the last card in the Lewis Data Package.

NOTE: The LEWIS THERMO data tape (MSFC Tape #23810) must be available to the program if the LEWIS Subroutine option is exercised. The Internal I/O Unit Number is 4.

3.2.3 IDNØZL Data Package

The IDNØZL Data Package is a required input item when the option to exercise a BATES Isp prediction is chosen (NSI = 3). The data contained in the IDNØZL package is used in the One-Dimensional Nozzle Subroutine to calculate losses caused by solid particles in the motor exhaust products. Data input through the IDNØZL Data Package are contained in the NAMELIST ØNEDNZ. No other NAMELISTS or set format data are included in the data package. Variables input through the IDNØZL Data Package are identified and defined in the Program Options Section (paragraph 3.4).

3.2.4 IBM Data Package

The IBM Data Package is a required input item when the option to predict motor performance using the Internal Ballistics Module is chosen (NF=1). The IBM Data Package is also required when a reconstruction is performed. The data contained in the IBM Data Package are used in the Internal Ballistics Module and the Nozzle Submergence and Contour Effects Module to predict or reconstruct motor performance. Data input through the IBM Data Package are contained in the NAMELIST IBDATA. No other NAMELISTS or set format data are included in this data package. Variables input through the IBM Data Package are identified and defined in the Internal Ballistics Options Section (paragraph 3.5).

Multiple Case Restriction: For multiple case runs in which the Internal Ballistics (IBM) option is executed, the IBM Data Package must be included in the first case data deck, even if the option is not chosen in that particular case. The IBM Data Package

3.2.4 (Continued)

must also be included in the data deck for each case in which the Internal Ballistics option is chosen. The program writes the entire IBM Data Package from the first case on disk and then reads it in each subsequent case for which the IBM option is exercised. Thus, data in the subsequent cases need only to update the data of the first case (if no update to the first case data is required, at least one variable must be included in the IBDATA NAMELIST in each case).

3.3 RECONSTRUCTION DATA TAPES

The magnetic tapes used for reconstruction of flight or static test consist of one file and are required to have 10 variables per record written in binary format. There is no limit on the number of records in the file. Variables are required in the following order:

1.	TIME	Time from ignition signal (SECONDS)
2.	PHEAD	Measured head-end pressure (PSIA)
3.	FLDCL	Force indicated by load cells in static test (LB_F)
4.	AVEHI	Measured vehicle longitudinal acceleration in flight (g's)
5.	MM2EST	Mass of the motor not being reconstructed during this run (LB_M)
6.	MØRB	Mass of the orbiter excluding the external tank propellant during flight (LB_M)
7.	MET	Mass of liquid propellants in the external tank during flight (LB_M)
8.	FSSME	Thrust of space shuttle main engines during flight (Total in LB_F)
9.	DRAG	Total shuttle vehicle drag during flight (LB_F)
10.	FM2EST	Estimated thrust of the other solid motor not being reconstructed during this run (LB_F)

User Action Required: Static test requirements are set to zero for flight reconstruction and flight requirements are set to zero for static test reconstruction.

3.4 PROGRAM OPTIONS

The SRB-II Performance Evaluation Model is constructed such that the user has options to choose the method of calculation for several of the intermediate calculation and output variables. Choice of calculation

3.4 (Continued)

method is largely dependent on availability of data. This section of the document defines the available options and shows the arrangement of the data for successful simulations using SRB-II.

The program options are presented graphically as an Options Tree in Figures 3-4 and 3-5. The Option Tree is used to define the available options and to identify the program input indicators which are required to obtain the desired option. Once the program indicators are defined, all the required input data for that option can be defined. For example if a reconstruction is required, the program indicator NRECØN would have to be input as NRECØN = 1 and data required for a reconstruction would have to be made available to the program. Note that the program automatically assumes one option by assigning a value to the indicator for that option is no value is input; all data for the automatically set option are required input in this situation. A further example of use of the Options Tree for a full problem follows:

PROBLEM: Suppose that the user requires a nominal prediction of motor performance using contractor supplied data to scale Isp and c*. The user desires to use an internal ballistics simulation for performance prediction.

SOLUTION: From the Options Tree, it is required that the indicator NRECØN be set to 0 (automatically set); the indicator NSI=2 for contractor data scaling prediction; the LEWIS subroutine is desired for the theoretical rocket performance parameters and the indicator NLEWIS=1; the motor nozzle is not submerged, indicator SILSB=1.0 (automatically set); the divergence loss is to be calculated and CLAME=0.0 (automatically set); the motor nozzle is conical, indicators ALPHA=0.0, QEX=0.0, XLAMBD=1.0 (automatically set); since no dispersion prediction is required, indicator NDISP=0 (automatically set); and since an internal ballistics prediction is desired, NF=1 (set automatically).

The input variables required for each option are identified in following paragraphs. Variables are identified and defined by option for each available option. Thus for the second example, it would be necessary to assemble the data required for a Contractor Data Scaling Prediction, paragraph 3.4.2, (the Contractor Data Scaling Prediction paragraph defines data requirements for each of the suboptions, LEWIS, submergence loss, and divergence loss) and the data required for an Internal Ballistics Performance Prediction, paragraph 3.5.

The program indicators NRECØN and NCASES are input to the program in the Control Data Package and are contained in NAMELIST INPUT1. The variable TITLE is also input through the Control Data Package and NAMELIST INPUT1. TITLE is the variable input used to identify the run. TITLE may contain up to 80 alpha-numeric characters enclosed in blocks of six in Hollerith fields (6H√√√√√√,) and separated by commas.

ORIGINAL PAGE IS
OF POOR QUALITY

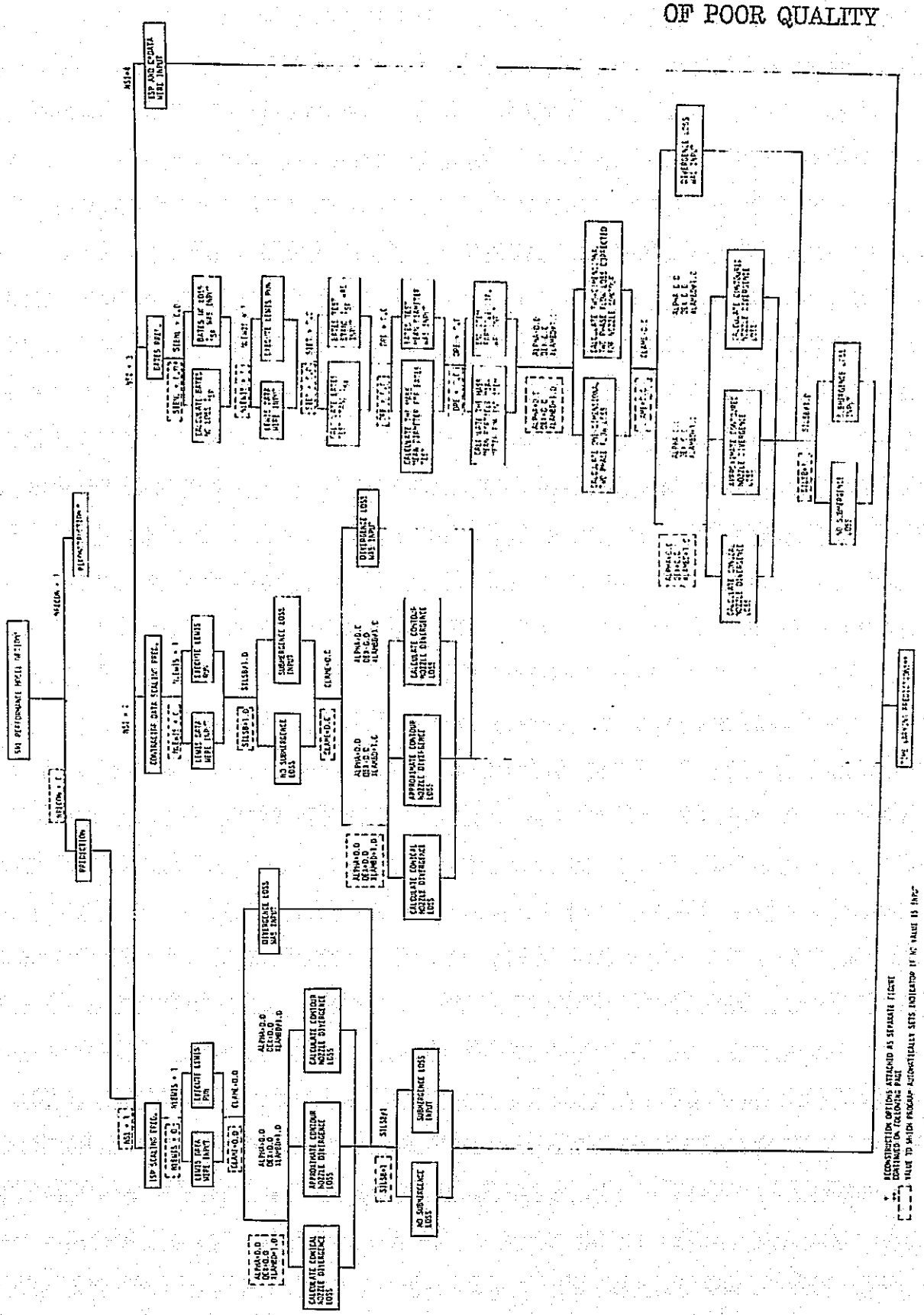

FIGURE 3-4 OPTIONS TREE FOR THE PREDICTION MODE OF SRB-II

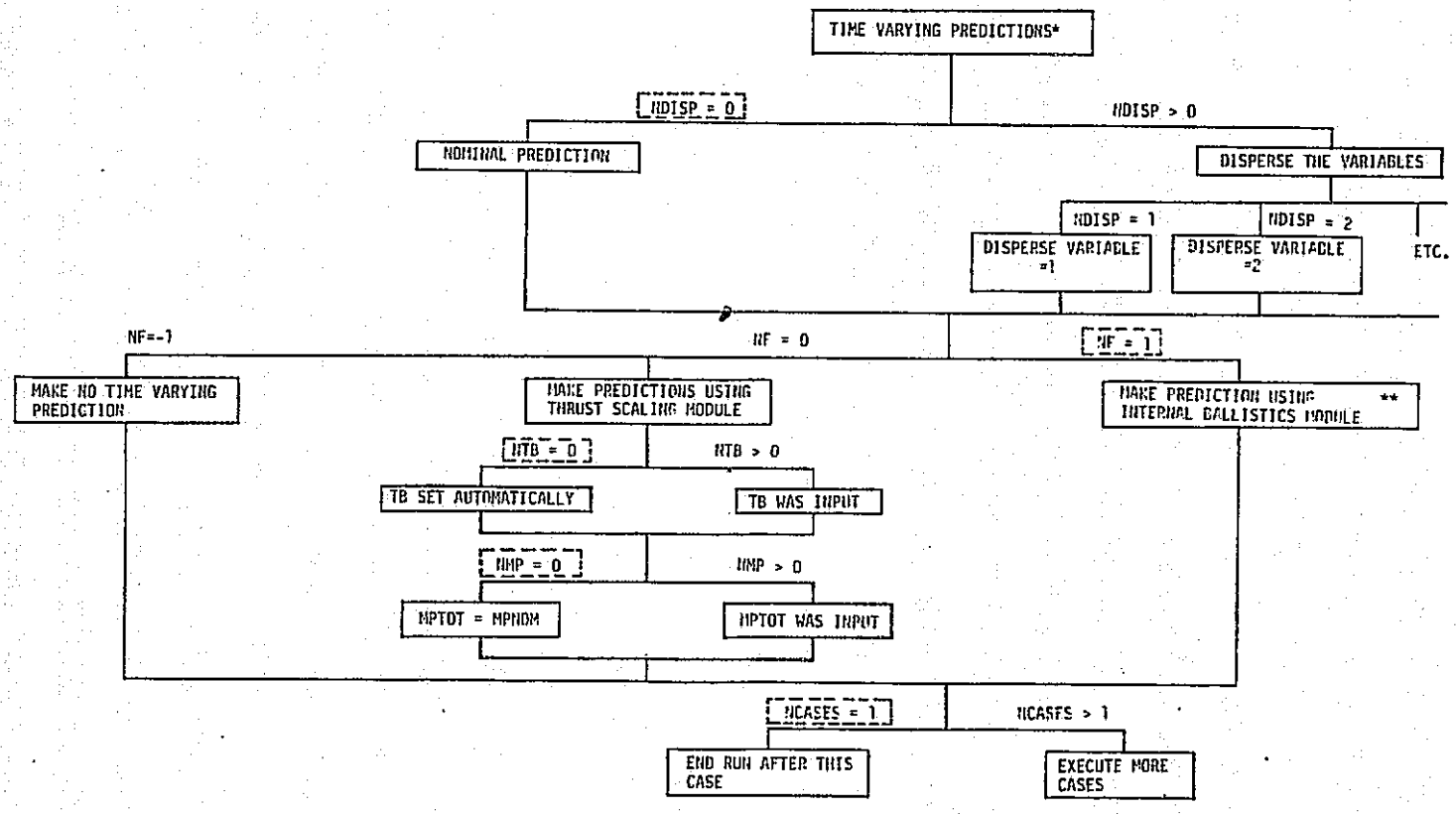

* CONTINUED FROM PREVIOUS PAGE

** OPTIONS LIST FOR INTERNAL BALLISTICS ATTACHED AS SEPARATE FIGURE (PARAGRAPH 3.5)

[ ] VALUE TO WHICH PROGRAM AUTOMATICALLY SETS INDICATOR IF NO VALUE IS INPUT

FIGURE 3-4 OPTIONS TREE FOR THE PREDICTION MODE OF SRB-II (CONTINUED)

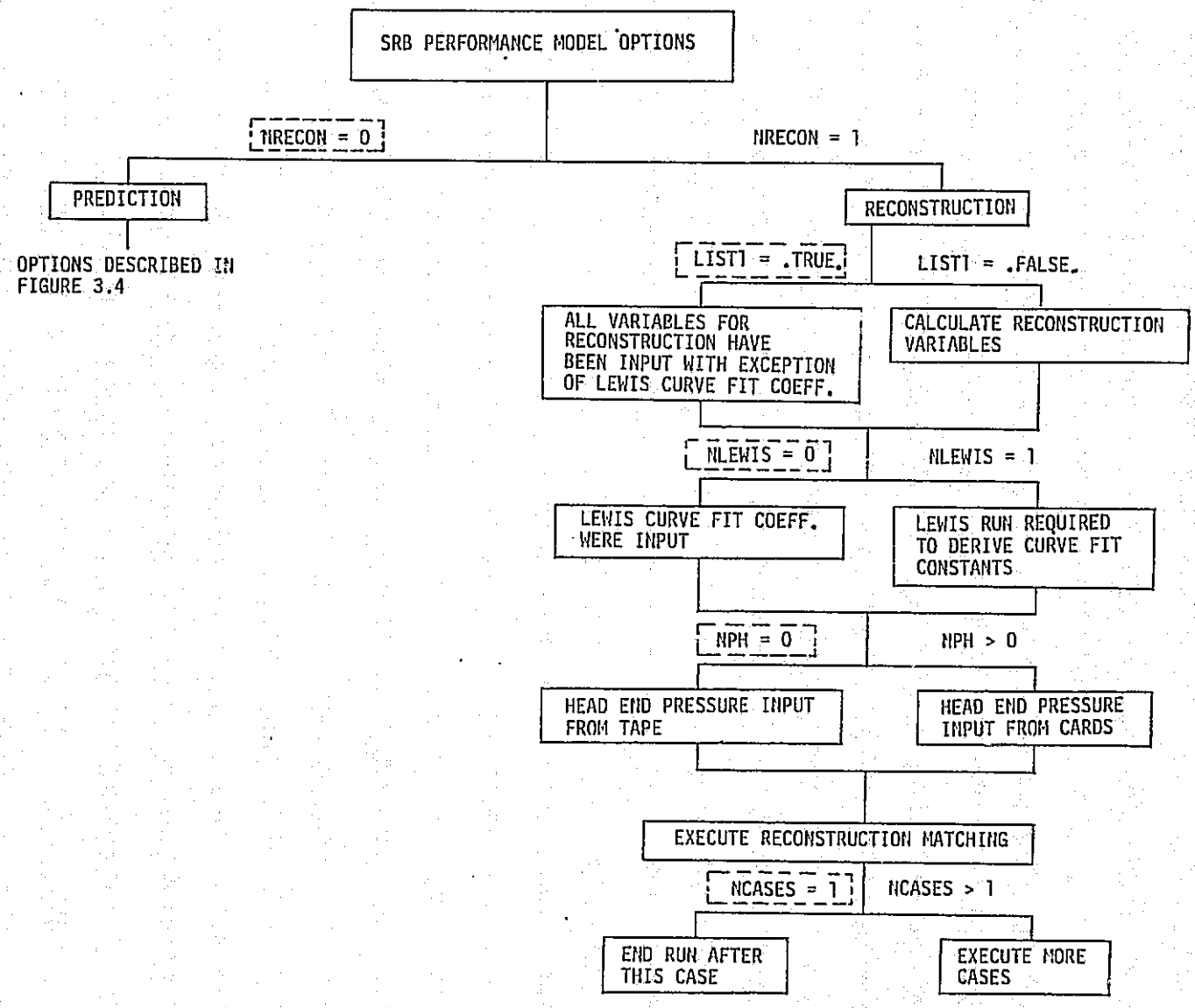

Value to Which Program Automatically Sets Indicator if no Value is Input.

FIGURE 3-5 OPTIONS TREE FOR THE RECONSTRUCTION MODE OF SRB-II

3.4 (Continued)

EXAMPLE:

```
TITLE = 6HSRB  P,6HERFORM,6HANCE M,6HODEL C,6HASE AL,6HPHA    ,
        6H10/15/,6H73    ,
```

3.4.1 Isp Scaling Prediction

The option to predict the end item delivered Isp and c* using the Isp Scaling technique is exercised by setting the program indicator NSI = 1. Data required for an Isp Scaling prediction are listed in Table 3-IV. Data which are listed under the indicator NSI = 1 are required for all Isp Scaling predictions. Data listed under NLEWIS = 0 are optional and required only if NLEWIS = 0. Likewise data listed under NLEWIS = 1 are optional and required only if the indicator NLEWIS = 1. The variable CLAME may be calculated from the nozzle geometry (CLAME=0.0) or input (CLAME>0.0). The data package and NAMELIST in which the variables are input to the program are identified in the last two columns of Table 3-IV.

Table 3-V lists definitions of all input variables identified in Table 3-IV. Variables are listed in alphabetical order to facilitate use.

3.4.2 Contractor Data Scaling Prediction

The option to predict the end item delivered Isp and c* using contractor supplied data is exercised by setting the program indicator NSI = 2. Inputs which are required for scaling contractor data are listed in Table 3-VI. As shown in paragraph 3.4.1, data required for a particular option are listed under the indicator for that option. Definitions for all contractor data input variables are listed alphabetically in Table 3-VII.

3.4.3 BATES Prediction

The option to predict the end item delivered Isp and c* using BATES program data is exercised by setting the program indicator NSI = 3. Input data required for the BATES prediction are listed in Table 3-VIII. As shown in paragraph 3.4.1, the data required for a particular option are listed under the indicator for that option. Definitions for all BATES input variables are listed alphabetically in Table 3-IX.

3.4.4 Dispersion Prediction

The option to disperse the nominal prediction is exercised by setting the program indicator NDISP > 0. Input data required for a dispersion prediction are listed in Table 3-X. As shown in Paragraph 3.4.1, the data required for a particular option are listed under the indicator for that option. Definitions for all dispersion prediction input variables are listed alphabetically in Table 3-XI.

3.4.5 Thrust Scaling Prediction

The option to predict the end item performance parameters as a function of time using the Thrust Scaling technique is exercised by setting the program indicator NF = 0. Input data required for a Thrust Scaling prediction are listed in Table 3-XII. As shown in paragraph 3.4.1, the data required for a particular option are listed under the indicator for that option. Definitions for all Thrust Scaling input variables are listed alphabetically in Table 3-XIII.

3.4.6 Reconstruction

The option to perform a reconstruction of motor performance using measured test data is exercised by setting the program indicator NRECØN = 1. Input data required for a reconstruction are listed in Table 3-XV. As shown in paragraph 3.4.1, the data required for a particular option are listed under the indicator for that option. Definitions for all reconstruction input variables given in Table 3-XV are listed alphabetically in Table 3-XVI.

The BIAS DATA are used to manipulate the reconstruction data after they are read from tape. The BIAS subroutine must be recompiled to include any bias factors required for correction of transducer drift and zero shift in a tape parameter.

CONTROL SYSTEMS DATA are used to correct the measured or calculated thrust for effects of thrust vector control. Thrust is corrected to nozzle centerline value by subroutine CØNT.

The Reconstruction Module uses the Internal Ballistics Module to perform the required match on measured head-end pressure. Thus, the IBM Data Package must be included for a reconstruction run.

3.4.7 Optional Output

SRB-II has several output options which are keyed by program indicators input through the data packages. A complete description of these output options is given in Section 4.0.

Theoretical rocket performance from the LEWIS subroutine may be obtained by setting the indicator IRKTOl=1 in the Control Data Package. The results of the One-Dimensional Nozzle subroutine may be obtained by setting the indicator IDNPRT=1 in the IDNØZL Data Package. Extended print for the One-Dimensional Nozzle may be obtained by setting the indicator IDBUG = 1 in the IDNØZL Data Package. Four Internal Ballistics Module print options are available and are controlled by the indicator PRTFLG (see paragraph 3.5 for definition and values). PRTFLG is input through the IBM Data Package.

TABLE 3-IV INPUT DATA REQUIRED FOR AN ISP SCALING PREDICTION

KEY: NRECØN = 0

VARIABLE NAME	TYPE	VALUE IF NOT INPUT	REQUIRED BY INDICATOR	INPUT DATA PACKAGE	NAMELIST
NSI = 1	INTEGER	1	---	CØNTRØL DATA	INPUT1
PCAVE	REAL	494.0	NSI = 1	"	"
DTE	"	71.0	"	"	"
ETACS	"	0.994	"	"	"
AK(10)	"	0.8543	"	"	"
AK(11)	"	0.0244	"	"	"
AK(12)	"	-0.00125	"	"	"
ARETE	"	6.0	"	"	"
ØK(3)	"	1.0	"	"	"
SILSB	"	1.0	"	"	"
NLEWIS = 0	INTEGER	0	---	"	"
AK(1)	REAL	246.62	NLEWIS=0	"	"
AK(2)	"	5.406	"	"	"
AK(3)	"	-0.144	"	"	"
MC(7)	"	5144.0	"	"	"
CSCØEF(1)	"	4735.23	"	"	"
CSCØEF(2)	"	0.09546955	"	"	"
CSCØEF(3)	"	-0.359902×10^{-4}	"	"	"
NLEWIS = 1	INTEGER	0	---	"	"
LEWIS INPUT DATA*	ALPHA-NUMERIC	---	NLEWIS=1	LEWIS DATA	NONE
CLAME = 0.0	REAL	0.0	---	CØNTRØL DATA	INPUT1
AHALFE	"	.3054327	CLAME=0.0	"	"
ALPHA	"	0.0	"	"	"
QEX	"	0.0	"	"	"
XLAMBD	"	1.0	"	"	"
CLAME > 0.0	"	0.0	---	"	"

*SEE SECTION 3.2.2: "LEWIS DATA PACKAGE"

TABLE 3-V VARIABLE DEFINITIONS FOR AN ISP SCALING PREDICTION

VARIABLE	DEFINITION
AHALFE	End item nozzle divergence half angle. (RADIANS)
AK(1)	Curve fit coefficient for theoretical vacuum Isp, in seconds, versus expansion ratio at average nozzle throat total pressure. Data derived from LEWIS Output. Isp=AK(1) + AK(2)* ARETE + AK(3)*ARETE**2
AK(2)	Curve fit coefficient for theoretical vacuum Isp, in seconds, versus expansion ratio at average nozzle throat total pressure. Data derived from LEWIS Output. Isp=AK(1) + AK(2)* ARETE + AK(3)*ARETE**2
AK(3)	Curve fit coefficient for theoretical vacuum Isp, in seconds, versus expansion ratio at average nozzle throat total pressure. Data derived from LEWIS Output. Isp=AK(1) + AK(2)* ARETE + AK(3)*ARETE**2
AK(10)	Semi-log to base e curve-fit coefficient for Isp efficiency versus flowrate. η_{ISP} = AK(10) + AK(11)*ln($\dot{m}$) + AK(12)*ln($\dot{m}$)**2
AK(11)	Semi-log to base e curve-fit coefficient for Isp efficiency versus flowrate. η_{ISP} = AK(10) + AK(11)*ln($\dot{m}$) + AK(12)*ln($\dot{m}$)**2
AK(12)	Semi-log to base e curve-fit coefficient for Isp efficiency versus flowrate. η_{ISP} = AK(10) + AK(11)*ln($\dot{m}$) + AK(12)*ln($\dot{m}$)**2
ALPHA	Equivalent conical divergence angle of the contoured nozzle. (RADIANS)
ARETE	End item nozzle area ratio. (A_{EXIT}/A_{THROAT})
CLAME	End item divergence loss factor λ, where $\lambda = (\frac{1+\cos\alpha}{2})$ and α is the nozzle divergence half angle in degrees.
CSCØEF(1)	Curve fit coefficient for end item propellant theoretical c*, in ft/sec, versus nozzle stagnation pressure in psia. c* = CSCØEF(1) + CSCØEF(2)*PN + CSCØEF(3)*PN**2

TABLE 3-V VARIABLE DEFINITIONS FOR AN ISP SCALING PREDICTION (Continued)

VARIABLE	DEFINITION
CSCØEF(2)	Curve fit coefficient for end item propellant theoretical c*, in ft/sec, versus nozzle stagnation pressure in psia. c* = CSCØEF(1) + CSCØEF(2)*PN + CSCØEF(3)*PN**2
CSCØEF(3)	Curve fit coefficient for end item propellant theoretical c*, in ft/sec, versus nozzle stagnation pressure in psia. c* = CSCØEF(1) + CSCØEF(2)*PN + CSCØEF(3)*PN**2
DTE	End item nozzle throat diameter. (IN)
ETACS	End item theoretical c* efficiency.
MC(7)	Theoretical c* of the end item propellant at end item average chamber pressure. (FT/SEC)
ØK(3)	Empirical correction for end item c* in SISCAL.
PCAVE	End item average chamber pressure. (PSIA)
SILSB	End item motor delivered specific impulse correction factor for the effect of nozzle submergence.
QEX	Angle of the nozzle contour of the nozzle exit plane referenced to the nozzle centerline. (RADIANS)
XLAMBD	Ratio of the theoretical specific impulse of a contoured nozzle to the theoretical specific impulse of an equivalent conical nozzle derived with the ATPAP program.

TABLE 3-VI INPUT DATA REQUIRED FOR A CONTRACTOR DATA SCALING PREDICTION

KEY: NRECØN = 0

VARIABLE NAME	TYPE	VALUE IF NOT INPUT	REQUIRED BY INDICATOR	INPUT DATA PACKAGE	NAMELIST
NSI = 2	INTEGER	1	---	CØNTRØL DATA	INPUT1
PCAVE	REAL	494.0	NSI = 2	"	"
DTE	"	71.0	"	"	"
MC(23)	"	4886.0	"	"	"
AK(10)	"	0.8543	"	"	"
AK(11)	"	0.0244	"	"	"
AK(12)	"	-0.00125	"	"	"
ØK(2)	"	1.0	"	"	"
ARET	"	9.8	"	"	"
ARETE	"	6.0	"	"	"
AHALF1	"	.2617994	"	"	"
PCT	"	494.0	"	"	"
SICØN	"	241.0	"	"	"
WD2	"	10.0	"	"	"
SILSB	"	1.0	"	"	"
NLEWIS = 0	INTEGER	0	---	"	"
AK(1)	REAL	246.62	NLEWIS = 0	"	"
AK(2)	"	5.406	"	"	"
AK(3)	"	-0.144	"	"	"
AK(13)	"	246.62	"	"	"
AK(14)	"	5.406	"	"	"
AK(15)	"	0.144	"	"	"
PAMT	"	14.7	"	"	"
MC(6)	"	5144.0	"	"	"
CSCØEF(1)	"	4735.23	"	"	"
CSCØEF(2)	"	0.095469	"	"	"
CSCØEF(3)	"	-0.359902×10^{-4}	"	"	"
NLEWIS = 1	INTEGER	0	---	"	"
MC(4)	REAL	1000.0	NLEWIS = 1	"	"
LEWIS INPUT DATA*	AL.-NUM.	---	"	LEWIS DATA	NONE
CLAME = 0.0	REAL	0.0	---	CØNTRØL DATA	INPUT1
AHALFE	"	.3054327	CLAME = 0.0	"	"
ALPHA	"	0.0	"	"	"
QEX	"	0.0	"	"	"
XLAMBD	"	1.0	"	"	"
CLAME > 0.0	"	0.0	---	"	"

*SEE SECTION 3.2.2 : "LEWIS DATA PACKAGE"

TABLE 3-VII VARIABLE DEFINITIONS FOR A CONTRACTOR SCALING PREDICTION

VARIABLE	DEFINITION
AHALFE	End item nozzle divergence half angle. (RADIANS)
AHALFT	Contractor test motor nozzle divergence half angle. (RADIANS)
AK(1)	Curve fit coefficient for End Item motor theoretical vacuum Isp, in seconds, versus expansion ratio at average nozzle throat total pressure. Data derived from LEWIS Output. Isp= AK(1)+AK(2)*ARETE+AK(3)*ARETE**2.
AK(2)	Curve fit coefficient for End Item motor theoretical vacuum Isp, in seconds, versus expansion ratio at average nozzle throat total pressure. Data derived from LEWIS Output. Isp= AK(1)+AK(2)*ARETE+AK(3)*ARETE**2.
AK(3)	Curve fit coefficient for End Item motor theoretical vacuum Isp, in seconds, versus expansion ratio at average nozzle throat total pressure. Data derived from LEWIS Output. Isp= AK(1)+AK(2)*ARETE+AK(3)*ARETE**2.
AK(10)	Semi-log to base e curve fit coefficient for Isp efficiency versus flowrate. η_{ISP} = AK(10) + AK(11)*ln($\dot{m}$)+ AK(12)*ln($\dot{m}$)**2
AK(11)	Semi-log to base e curve fit coefficient for Isp efficiency versus flowrate. η_{ISP} = AK(10) + AK(11)*ln($\dot{m}$)+ AK(12)*ln($\dot{m}$)**2
AK(12)	Semi-log to base e curve fit coefficient for Isp efficiency versus flowrate. η_{ISP} = AK(10) + AK(11)*ln($\dot{m}$)+ AK(12)*ln($\dot{m}$)**2
AK(13)	Curve fit coefficient for contractor test motor theoretical vacuum specific impulse, in seconds, versus expansion ratio on average nozzle throat total pressure. Data derived from LEWIS output. Isp=AK(13) + AK(14)*ARET + AK(15)*ARET**2
AK(14)	Curve fit coefficient for contractor test motor theoretical vacuum specific impulse, in seconds, versus expansion ratio on average nozzle throat total pressure. Data derived from LEWIS output. Isp=AK(13) + AK(14)*ARET + AK(15)*ARET**2

TABLE 3-VII VARIABLE DEFINITIONS FOR A CONTRACTOR SCALING PREDICTION (CONTINUED)

VARIABLE	DEFINITION
AK(15)	Curve fit coefficient for contractor test motor theoretical vacuum specific impulse, in seconds, versus expansion ratio on average nozzle throat total pressure. Data derived from LEWIS output. Isp=AK(13) + AK(14)*ARET + AK(15)*ARET**2.
ALPHA	Equivalent conical divergence angle of the contoured nozzle. (RADIANS)
ARET	Contractor test motor nozzle area ratio. (A_{EXIT}/A_{THROAT})
ARETE	End item nozzle area ratio. (A_{EXIT}/A_{THROAT})
CLAME	End item divergence loss factor λ, where $\lambda = (\frac{1+\cos\alpha}{2})$ and α is the nozzle divergence half angle in degrees.
CSCØEF(1)	Curve fit coefficient for end item propellant theoretical c* in ft/sec, versus nozzle stagnation pressure in psia. c* = CSCØEF(1) + CSCØEF(2)*PN + CSCØEF(3)*PN**2
CSCØEF(2)	Curve fit coefficient for end item propellant theoretical c*, in ft/sec, versus nozzle stagnation pressure in psia. c* = CSCØEF(1) + CSCØEF(2)*PN + CSCØEF(3)*PN**2
CSCØEF(3)	Curve fit coefficient for end item propellant theoretical c* in ft/sec, versus nozzle stagnation pressure in psia. c* = CSCØEF(1) + CSCØEF(2)*PN + CSCØEF(3)*PN**2
CSTAR	Predicted end item characteristic velocity (c*). (FT/SEC)
DTE	End item nozzle throat diameter. (IN)
MC(4)	Typical BATES test motor nozzle throat total pressure, set to 1000 psia. (PSIA)
MC(6)	Theoretical c* of the end item propellant at 1000 psia chamber pressure. (FT/SEC)

TABLE 3-VII VARIABLE DEFINITIONS FOR A CONTRACTOR SCALING PREDICTION (CONTINUED)

VARIABLE	DEFINITION
ØK(2)	Empirical adjustment for end item motor efficiency used in CDSI.
PAMT	Contractor test ambient pressure. (PSIA)
PCAVE	End item average nozzle throat total pressure. (PSIA)
PCT	Contractor test motor nozzle throat total pressure. (PSIA)
QEX	Angle of the nozzle contour at the nozzle exit plane measured from the nozzle centerline. (RADIANS)
SICØN	Contractor test motor specific impulse. (SECONDS)
SILSB	End item motor delivered specific impulse correction factor for the effect of nozzle submergence.
WD2	Contractor test motor flowrate. (LBS/SEC)
XLAMBD	Ratio of the theoretical specific impulse of a contoured nozzle to the theoretical specific impulse of an equivalent conical nozzle derived with the ATPAP program.

TABLE 3-VIII INPUT DATA REQUIRED FOR A RATES PREDICTION

KEY: NRECØN = 0

VARIABLE NAME	TYPE	VALUE IF NOT INPUT	REQUIRED BY INDICATOR	INPUT DATA PACKAGE	NAMELIST
NSI = 3	INTEGER	1	---	CØNTRØL DATA	INPUT1
AHALFE	REAL	.3054327	NSI = 3	"	"
AL	"	0.943	"	"	"
ARETE	"	6.0	"	"	"
DTE	"	71.0	"	"	"
MC(4)	"	1000.0	"	"	"
MC(8)	"	-1.0	"	"	"
MC(9)	"	2.9583	"	"	"
MC(10)	"	2.9583	"	"	"
ØK(1)	"	1.0	"	"	"
QAIE	"	1450.0	"	"	"
QBT	"	4200.0	"	"	"
WINE	"	15081.0	"	"	"
WPE	"	1676366.0	"	"	"
PSTAG	"	1000.0	"	IDNØZL DATA	ØNEDNZ
TSTAGK	"	3321.0	"	"	"
TEXITK	"	1957.0	"	"	"
CHEN	"	-433.11	"	"	"
EXEN	"	-1225.4	"	"	"
GMUS	"	0.00005	"	"	"
PRØP	"	1.0	"	"	"
ALPHA	"	0.6	"	"	"
CPL	"	8503.3	"	"	"
CPS	"	8610.7	"	"	"
HLM	"	4.7944×10^7	"	"	"
HSM	"	3.5978×10^7	"	"	"
TM	"	4167.0	"	"	"
PARWT	"	101.94	"	"	"
GMSSP	"	249.7	"	"	"
ATABL(1)	"	0.001	"	"	"
EPSI	"	0.1	"	"	"
EPSM	"	0.008	"	"	"
DXO	"	0.001	"	"	"
RTABL(1)	"	0.000001	"	"	"
WTMØLG	"	19.20641	"	"	"
SIBNL = 0.0	"	0.0	---	CØNTRØL DATA	INPUT1
ARETB	"	8.82	SIBNL	"	"
DTB	"	1.926	"	"	"
PCBT	"	1000.0	"	"	"
PAMBT	"	14.696	"	"	"

TABLE 3-VIII INPUT DATA REQUIRED FOR A BATES PREDICTION (CONTINUED)

KEY: NRECØN = 0 NSI = 3

VARIABLE NAME	TYPE	VALUE IF NOT INPUT	REQUIRED BY INDICATOR	INPUT DATA PACKAGE	NAMELIST
SIBNL = 0.0 CONT.					
MC(3)	REAL	8.82	SIBNL=0.0	CONTROL DATA	INPUT1
MC(5)	"	0.017	"	"	"
WPBT	"	69.83	"	"	"
SIBT = 0.0*	"	0.0	---	"	"
ETABT*	"	0.0	SIBT = 0.0	"	"
SIBT > 0.0*	"	0.0	---	"	"
DPB = 0.0*	"	0.0	---	"	"
AK(4)*	"	1.4939	DPB = 0.0	"	"
AK(5)*	"	0.62403	"	"	"
AK(6)*	"	-0.0030535	"	"	"
AK(7)*	"	-4.278×10^{-4}	"	"	"
AK(8)*	"	8.6194×10^{-6}	"	"	"
AK(9)*	"	-4.634×10^{-8}	"	"	"
DPB > 0.0*	"	0.0	---	"	"
SIBNL > 0.0	"	0.0	---	"	"
DPE = 0.0	"	0.0	---	"	"
AK(4)	"	1.4939	DPE = 0.0	"	"
AK(5)	"	0.62403	"	"	"
AK(6)	"	-0.0030535	"	"	"
AK(7)	"	-4.278×10^{-4}	"	"	"
AK(8)	"	8.6194×10^{-6}	"	"	"
AK(9)	"	-4.634×10^{-8}	"	"	"
DPE > 0.0	"	0.0	---	"	"
NLEWIS = 0.0	INTEGER	0.0	---	"	"
AK(1)	REAL	246.62	NLEWIS = 0	"	"
AK(2)	"	5.406	"	"	"
AK(3)	"	-0.144	"	"	"
CSTART*	"	5144.0	"	"	"
PAMBT*	"	14.696	"	"	"
MC(2)*	"	5184.0	"	"	"
MC(6)	"	5144.0	"	"	"
MC(24)*	"	5144.0	"	"	"

*REQUIRED ONLY IN SIBNL = 0.0

TABLE 3-VIII INPUT DATA REQUIRED FOR A BATES PREDICTION (CONTINUED)

KEY: NRECØN = 0 NSI = 3

VARIABLE NAME	TYPE	VALUE IF NOT INPUT	REQUIRED BY INDICATOR	INPUT DATA PACKAGE	NAMELIST
NLEWIS = 0.0 CONT					
CSCØEF(1)	REAL	4735.23	NLEWIS = 0	CØNTRØL DATA	INPUT1
CSCØEF(2)	"	0.09546955	"	"	"
CSCØEF(3)	"	-0.359902X10-4	"	"	"
NLEWIS = 1	INTEGER	0	---	"	"
MC(15)	REAL	68.2	NLEWIS = 1	"	"
LEWIS INPUT DATA*	AL.NUM.	---	"	LEWIS DATA	NONE
CLAME = 0.0	REAL	0.0	---	CØNTRØL DATA	INPUT1
ALPHA	"	0.0	CLAME = 0	"	"
QEX	"	0.0	"	"	"
XLAMBD	"	1.0	"	"	"
CLAME > 0.0	"	0.0	---	"	"

* SEE SECTION 3.2.2: "LEWIS DATA PACKAGE"

TABLE 3-IX VARIABLE DEFINITIONS FOR A BATES PREDICTION

VARIABLE	DEFINITION
AHALFE	End item nozzle divergence half angle. (RADIANS)
AK(1)	Curve fit coefficient for theoretical vacuum Isp, in seconds, versus expansion ratio at 1000 psia chamber pressure. Data derived from LEWIS Output. Isp = AK(1) + AK(2)*ARETE + AK(3)*ARETE**2
AK(2)	Curve fit coefficient for theoretical vacuum Isp, in seconds, versus expansion ratio at 1000 psia chamber pressure. Data derived from LEWIS Output. Isp = AK(1) + AK(2)*ARETE + AK(3)*ARETE**2
AK(3)	Curve fit coefficient for theoretical vacuum Isp, in seconds, versus expansion ratio at 1000 psia chamber pressure. Data derived from LEWIS Output. Isp = AK(1) + AK(2)*ARETE + AK(3)*ARETE**2
AK(4)	Curve fit coefficient for solid particle mean mass particle diameter in microns versus nozzle throat diameter in inches. MDP = AK(4) + AK(5)*D + AK(6)*D**2 + AK(7)*D**3 AK(8)*D**4 + AK(9)*D**5
AK(5)	Curve fit coefficient for solid particle mean mass particle diameter in microns versus nozzle throat diameter in inches. MDP = AK(4) + AK(5)*D + AK(6)*D**2 + AK(7)*D**3 AK(8)*D**4 + AK(9)*D**5
AK(6)	Curve fit coefficient for solid particle mean mass particle diameter in microns versus nozzle throat diameter in inches. MDP = AK(4) + AK(5)*D + AK(6)*D**2 + AK(7)*D**3 AK(8)*D**4 + AK(9)*D**5
AK(7)	Curve fit coefficient for solid particle mean mass particle diameter in microns versus nozzle throat diameter in inches. MDP = AK(4) + AK(5)*D + AK(6)*D**2 + AK(7)*D**3 AK(8)*D**4 + AK(9)*D**5

TABLE 3-IX VARIABLE DEFINITIONS FOR A BATES PREDICTION (Continued)

VARIABLE	DEFINITION
AK(8)	Curve fit coefficient for solid particle mean mass particle diameter in microns versus nozzle throat diameter in inches. MDP = AK(4) + AK(5)*D + AK(6)*D**2 + AK(7)*D**3 AK(8)*D**4 + AK(9)*D**5
AK(9)	Curve fit coefficient for solid particle mean mass particle diameter in microns versus nozzle throat diameter in inches. MDP = AK(4) + AK(5)*D + AK(6)*D**2 + AK(7)*D**3 AK(8)*D**4 + AK(9)*D**5
AL	Propellant aluminum loading normalized to 16%: $AL = \frac{\%AL}{16.0}$
ALPHA	Temperature exponent in viscosity versus temperature equation of IDNOZL. Used only in IDNOZL Namelist. Set to 0.6
ALPHA	Equivalent conical divergence angle of the contoured nozzle.
ARETB	BATES test motor nozzle expansion ratio. (A_{EXIT}/A_{THROAT})
ARETE	End item nozzle area ratio. (A_{EXIT}/A_{THROAT})
ATHBL	A dimensionless absolute tolerance on the gas and particle velocities used in IDNOZL Runge - Kutta integration. Suggested value: 0.001.
CHEN	BATES test motor chamber enthalpy. (KCAL/ 100 GRAMS)
CLAME	End item divergence loss factor λ^*, where λ is $(\frac{1+\cos\alpha}{2})$ and α is the nozzle divergence half-angle in degrees.
CPL	Specific heat of the BATES test motor combustion product liquid particles. (FT^2/SEC^2 - DEG R)
CPS	Specific heat of the BATES test motor combustion product solid particles. (FT^2/SEC^2 - DEG R)

TABLE 3-IX VARIABLE DEFINITIONS FOR A BATES PREDICTION (Continued)

VARIABLE	DEFINITION
CSCØEF(1)	Curve fit coefficient for end item propellant theoretical c* in ft/sec, versus nozzle stagnation pressure in psia. c* = CSCØEF(1) + CSCØEF(2)*PN + CSCØEF(3)*PN**2
CSCØEF(2)	Curve fit coefficient for end item propellant theoretical c* in ft/sec, versus nozzle stagnation pressure in psia. c* = CSCØEF(1) + CSCØEF(2)*PN + CSCØEF(3)*PN**2
CSCØEF(3)	Curve fit coefficient for end item propellant theoretical c* in ft/sec, versus nozzle stagnation pressure in psia. c* = CSCØEF(1) + CSCØEF(2)*PN + CSCØEF(3)*PN**2
CSTAR1	End Item motor theoretical characteristics exhaust velocity at the nozzle throat (c*). (FT/SEC)
DPB	BATES test motor combustion product solid particle mean mass particle diameter. (MICRØN)
DPE	End item combustion product solid particle mean mass particle diameter. (MICRONS)
DTB	BATES test motor throat diameter. (IN)
DTE	End item nozzle throat diameter. (IN)
DXO	A dimensionless integration interval in IDNØZL suggested value: 0.001.
ESPM	A dimensionless tolerance limit used as the denominator by IDØZNL in solving the total momentum equation integration interval. Suggested value: 0.008.
ESP1	A dimensionless tolerance on gas velocity at left end of bracketing solutions in IDNØZL. Suggested value: 0.1.
ETABT	BATES test motor Isp efficiency (actual/theoretical) for standard conditions (1000 to 14.7 psia expansion).
EXEN	BATES test motor nozzle exit enthalpy. (KCAL/100 GRAMS)

TABLE 3-IX VARIABLE DEFINITIONS FOR A BATES PREDICTION (Continued)

VARIABLE	DEFINITION
GMSSP	BATES test motor combustion product particle mass density (LB_M/FT^3).
GMUS	BATES test motor combustion products viscosity. (LB_F/FT - SEC)
HLM	BATES test motor combustion product particle enthalpy at the particle melting point with the particle in the liquid state. (FT^2/SEC^2)
HSM	BATES test motor combustion product particle enthalpy at the particle melting point with the particle in the solid state. (FT^2/SEC^2)
MC(2)	BATES test motor c*. (FT/SEC)
MC(3)	Area ratio for theoretical optimum expansion from 1000 psia to 14.7 psia. Available from optional LEWIS Output.
MC(4)	BATES test motor standard chamber pressure. (1000 PSIA)
MC(5)	$(1 - \lambda)$ where λ is the divergence loss factor $\frac{1 + \cos\alpha}{2}$ and α is the nozzle divergence half-angle.
MC(6)	Theoretical c* of the end item propellant at 1000 psia chamber pressure. (FT/SEC)
MC(8)	End item nozzle entrance slope in the converging section. (See conical nozzle sketch below.)
MC(9)	End item nozzle throat radius. (See conical nozzle sketch below). (FT)
MC(10)	End item nozzle throat exit radius (See conical nozzle sketch below). (FT)

TABLE 3-IX VARIABLE DEFINITIONS FOR A BATES PREDICTION (Continued)

VARIABLE	DEFINITION

CONICAL NOZZLE SKETCH

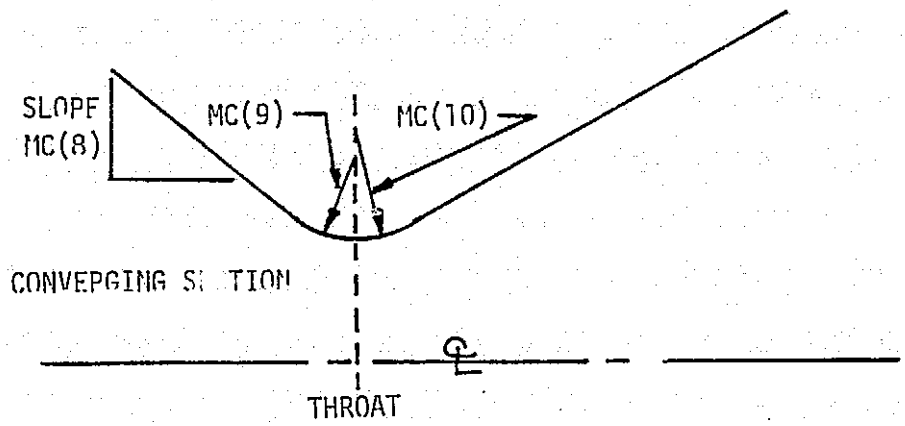

MC(15)	Standard pressure ratio (1000 to 14.7 psia). Set equal to 68.2.
MC(24)	End Item motor theoretical specific impulse at the nozzle throat. (SEC)
ØK(1)	Empirical adjustment for calculated end item c* from BATES Module.
PAMBT	BATES test ambient pressure. (PSIA)
PARWT	BATES test motor combustion product molecular weight. (GRAMS/MOLE)
PCBT	BATES test motor steady state chamber pressure. (PSIA)
PRØP	BATES test motor propellant fuel indicator; 0 or 1 for aluminum; greater than 1 for beryllium.
PSTAG	BATES test motor steady state nozzle entrance total pressure (PSIA).
QAIE	End Item expended inerts heat of ablation. (BTU/LBM)
QBT	BATES test motor heat loss. (BTU)

TABLE 3-IX VARIABLE DEFINITIONS FOR A BATES PREDICTION (Continued)

VARIABLE	DEFINITION
QEX	Angle of the nozzle contour at the nozzle exit plane measured for the nozzle centerline. (RADIANS)
RATBL	A dimensionless relative tolerance on the gas and particle velocity and enthalpy used in the IDNOZL Runge - Kutta integration. Suggested value: 1×10^{-6}
SIBT	BATES test motor specific impulse at standard conditions. (1000 to 14.7 psia expansion). (SEC)
SILSB	End Item motor delivered specific impulse correction factor for the effect of nozzle submergence.
TM	BATES test motor combustion product solid particle melting point (DEG R).
TSTAGK	BATES test motor steady state nozzle entrance total temperature. (DEG K)
WINE	End item mass of expanded "inerts". (LBM)
WPBT	BATES test motor propellant mass. (LB_M)
WPE	End item mass of initial propellant. (LBM)
WTMØLG	BATES test motor combustion product gas molecular weight. Available from optional LEWIS Output. (GRAMS/MOLE)
XLAMBD	Ratio of the theoretical specific impulse of a contoured nozzle to the theoretical specific impulse of an equivalent conical nozzle derived with the ATPAP program.

TABLE 3-X INPUT DATA REQUIRED FOR A DISPERSION PREDICTION

KEY: NRECON = 0

VARIABLE NAME	TYPE	VALUE IF NOT INPUT	REQUIRED BY INDICATOR	INPUT DATA PACKAGE	NAMELIST
NDISP = 0	INTEGER	0	---	CONTROL DATA	INPUT1
NDISP = 1	"	0	"	"	"
DISLIM(1)	REAL	0.000615	NDISP = 1	"	"
NDISP = 2	INTEGER	0	---	"	"
DISLIM(1)	REAL	-0.000615	NDISP = 2	"	"
NDISP = 3	INTEGER	0	---	"	"
DISLIM(2)	REAL	0.00612	NDISP = 3	"	"
NDISP = 4	INTEGER	0	---	"	"
DISLIM(2)	REAL	-0.00612	NDISP = 4	"	"
NDISP = 5	INTEGER	0	---	"	"
DISLIM(3)	REAL	0.00268	NDISP = 5	"	"
NDISP = 6	INTEGER	0	---	"	"
DISLIM(3)	REAL	-0.00268	NDISP = 6	"	"
NDISP = 7	INTEGER	0	---	"	"
DISLIM(4)	REAL	0.000065	NDISP = 7	"	"
NDISP = 8	INTEGER	0	---	"	"
DISLIM(4)	REAL	-0.000065	NDISP = 8	"	"
NDISP = 9* +	INTEGER	0	---	"	"
DISLIM(5)	REAL	0.00084	NDISP = 9	"	"
NDISP = 10* +	INTEGER	0	---	"	"
DISLIM(5)	REAL	-0.00084	NDISP = 10	"	"
NDISP = 11* +	INTEGER	0	---	"	"
DISLIM(6)	REAL	0.00393	NDISP = 11	"	"
NDISP = 12* +	INTEGER	0	---	"	"
DISLIM(6)	REAL	-0.00393	NDISP = 12	"	"
NDISP = 13	INTEGER	0	---	"	"
DISLIM(7)	REAL	0.05001	NDISP = 13	"	"

*Non-Automated Dispersion-User Action Required: Disperse input data external to program.

+Does not affect simulation - Used for run identifiction only.

TABLE 3-X INPUT DATA REQUIRED FOR A DISPERSION PREDICTION (CONTINUED)

KEY: NRECON = 0

VARIABLE NAME	TYPE	VALUE IF NOT INPUT	REQUIRED BY INDICATOR	INPUT DATA PACKAGE	NAMELIST
NDISP = 14	INTEGER	0	---	CONTROL DATA	INPUT 1
DISLIM(7)	REAL	0.05001	NDISP = 14	"	"
NDISP = 15	INTEGER	0	---	"	"
DISLIM(8)	REAL	0.3861	NDISP = 15	"	"
NDISP = 16	INTEGER	0	---	"	"
DISLIM(8)	REAL	-0.3861	NDISP = 16	"	"
NDISP = 17	INTEGER	0	---	"	"
DISLIM(9)	REAL	0.0006	NDISP = 17	"	"
NDISP = 18	INTEGER	0	---	"	"
DISLIM(9)	REAL	-0.0006	NDISP = 18	"	"
NDISP = 19	INTEGER	0	---	"	"
DISLIM(10)	REAL	5.000	NDISP = 19	"	"
NDISP = 20* +	INTEGER	0	---	"	"
DISLIM(10)	REAL	-5.000	NDISP = 20	"	"
NDISP = 21* +	INTEGER	0	---	"	"
DISLIM(11)	REAL	0.01033	NDISP = 21	"	"
NDISP = 22	INTEGER	0	---	"	"
DISLIM(11)	REAL	-0.01033	NDISP = 22	"	"

NOTE: DISPERSION PREDICTIONS ALSO REQUIRE NOMINAL DATA DECK FOR INTERNAL BALLISTICS PREDICTION AS INPUT.

TABLE XI VARIABLE DEFINITIONS FOR A DISPERSION PREDICTION

VARIABLE	DEFINITION
DISLIM(1)	Propellant density dispersion limit formed as the dispersion value of density divided by the nominal value of density.
DISLIM(2)	Burning rate law pressure exponent dispersion limit formed by the dispersion value of pressure exponent divided by the nominal value of pressure exponent.
DISLIM(3)	Burning rate law pressure coefficient dispersion limit formed by the dispersion value of pressure coefficient divided by the nominal value of pressure coefficient.
DISLIM(4)	Characteristic velocity dispersion limit formed by the dispersion value of characteristic velocity divided by the nominal value of pressure coefficient.
DISLIM(5)	Propellant grain length dispersion limit formed by the dispersion value of grain length divided by the nominal value of grain length.
DISLIM(6)	Propellant grain web thickness dispersion limit formed by the dispersion value of grain web thickness divided by the nominal value of web thickness.
DISLIM(7)	Initial nozzle throat diameter dispersion limit. (INCHES)
DISLIM(8)	Initial nozzle exit diameter dispersion limit. (INCHES)
DISLIM(9)	Nozzle throat erosion rate dispersion limit based on the throat radius. (INCHES/SECOND)
DISLIM(10)	Propellant grain temperature dispersion limit. (DEGREES F)
DISLIM(11)	Initial "inert" mass dispersion limit formed by the dispersion value of "inert" mass divided by the nominal value of propellant mass.

TABLE XI VARIABLE DEFINITIONS FOR A DISPERSION PREDICTION (Continued)

VARIABLE	DEFINITION
NDISP	Indicator for dispersion prediction: NDISP=0, Nominal Prediction NDISP=1, +propellant density dispersion NDISP=2, -propellant density dispersion NDISP=3, +burning rate law pressure exponent dispersion NDISP=4, -burning rate law pressure exponent dispersion NDISP=5, +burning rate law pressure coefficient dispersion NDISP=6, -burning rate law pressure coefficient dispersion NDISP=7, +characteristic velocity dispersion NDISP=8, -characteristic velocity dispersion NDISP=9* +propellant grain length dispersion NDISP=10*, -propellant grain length dispersion NDISP=11*, +propellant grain web/thickness dispersion NDISP=12*, -propellant grain web/thickness disperson NDISP=13, +initial throat diameter dispersion NDISP=14, -initial throat diameter dispersion NDISP=15, +initial exit diameter dispersion NDISP=16, -initial exit diameter dispersion NDISP=17, +throat erosion rate dispersion (radius) NDISP=18, -throat erosion rate dispersion (radius) NDISP=19*,+propellant grain temperature dispersion NDISP=20*,-propellant grain temperature dispersion NDISP=21, +initial "inert" mass consumable dispersion NDISP=22, -initial "inert" mass consumable dispersion

*Non-automated dispersion - user must perturb the input data in order to generate dispersion prediction data for this case.

TABLE 3-XII INPUT DATA REQUIRED FOR A THRUST SCALING PREDICTION

KEY: NRECØN = 0

VARIABLE NAME	TYPE	VALUE IF NOT INPUT	REQUIRED BY INDICATOR	INPUT DATA PACKAGE	NAMELIST
NF = 0	INTEGER	1	---	CØNTRØL DATA	INPUT1
ATB(I)*	REAL	TABLE 3.XIV	NF=0	"	"
AFSRM(I)*	"	"	"	"	"
MPNØM	"	1676366.0	"	"	"
NP(1)**	INTEGER	40	"	"	"
SII	REAL	190.0	"	"	"
MC(1)	"	0.1718×10^{-3}	"	"	"
AMPRR(I)+	"	TABLE 3.XIV	"	"	"
AMIRR(I)+	"	"	"	"	"
NP(10)++	INTEGER	10	"	"	"
MITØT	REAL	15081.0	"	"	"
NTB = 0	INTEGER	0	---	"	"
NTB > 0	"	0	---	"	"
TB	REAL	150.0	NTB>0	"	"
NMP = 0	INTEGER	0	---	"	"
NMP > 0	"	0	---	"	"
MPTØT	REAL	1676366.0	NMP>0	"	"

*Maximum of 50 points. +Maximum of 10 points.

**NP(1) must be $\leq$ 50. ++NP(10) must be $\leq$ 10.

TABLE 3-XIII VARIABLE DEFINITIONS FOR THRUST SCALING PREDICTIONS

VARIABLE	DEFINITION
AFSRM(I)	Array of nominal vacuum thrust used to generate a thrust scaling performance prediction. Points in ATB(I) must correspond to points in AFSRM(I), i.e., ATB(3) is the time at which nominal thrust is AFSRM(3). (LBF)
AMIRR(I)	Array of non-dimensional inert mass remaining for an inert mass calculation. Points in AMIRR(I) must correspond to points in AMPRR(I), i.e., AMPRR(5) must correspond to AMIRR(5).
AMPRR(I)	Array of non-dimensionalized propellant remaining for an inert mass calculation. Points in AMPPR(I) must correspond to points in AMIRR(I), i.e., AMPRR(5) is the portion of propellant mass remaining which corresponds to AMIRR(5). AMPRR(I) is non-dimensionalized by dividing the mass remaining schedule by MPTØT.
ATB(I)	Array of nominal times used to generate a thrust scaling prediction. Points in ATB(I) must correspond to points in AFSRM(I), i.e., ATB(3) is the time at which nominal thrust is AFSRM(3). (SECONDS)
MC(1)	Constant for converting SRM thrust to SRM nozzle stagnation pressure for a thrust scaling prediction. $MC(1) = 1.0/(C_F A_t)$ (IN^{-2})
MITØT	Total "inert" mass on board at time equal zero. (LBM)
MPNØM	Nominal propellant mass for a thrust scaling performance prediction. This mass must be compatible with ATB and AFSRM. (LBM)
MPTØT	Total initial propellant mass for a thrust scaling performance prediction. (LBM)
NF	Indicator used to establish which module is to be used to generate propulsion performance predictions. NF = 0: Thrust Scaling Module. NF = 1: Internal Ballistics Module.
NMP	Indicator used for thrust scaling prediction. NMP = 0: MPTØT = MPNØN, NMP > 0: MPTØT is an input variable.
NP(1)	Number of points in the ATB and AFSRM arrays. Maximum of 50 points.

TABLE 3-XIII VARIABLE DEFINITIONS FOR THRUST SCALING PREDICTIONS (Continued)

VARIABLE	DEFINITION
NP(10)	Number of points in the AMPRP and AMIRR arrays. Maximum of 10 points.
NTB	Indicator used for thrust scaling performance prediction. NTB = 0: TB = ATB (NP(1) - 1). NTB > 0: TB was input by NAMELIST.
SII	Specific impulse of the inert material exhausted from the motor. (SECONDS)
TB	Motor burn time for thrust scaling performance prediction. (SECONDS)

TABLE 3-XIV NOMINAL VALUES FOR USE IN THRUST SCALING PREDICTION

POINT NO.	ATB(I)	AFSRM(I)*	AMPRR(I)	AMIRR(I)
1	0.0	0.0	0.0	0.0
2	1.0	2,969,184	0.0	0.0
3	4.0	3,059,184	0.0	0.0
4	8.0	3,199,184	0.090	0.150
5	12.0	3,299,184	0.160	0.235
6	16.0	3,389,184	0.255	0.325
7	20.0	3,459,184	0.740	0.670
8	24.0	3,549,184	0.850	0.770
9	28.0	3,649,184	0.928	0.870
10	32.0	3,839,184	1.000	1.000
11	36.0	3,849,184		
12	40.0	3,929,184		
13	44.0	3,859,184		
14	48.0	3,799,184		
15	52.0	3,749,184		
16	56.0	3,699,184		
17	60.0	3,649,184		
18	64.0	3,559,184		
19	68.0	3,489,184		
20	72.0	3,439,184		
21	76.0	3,439,184		
22	80.0	3,439,184		
23	84.0	3,439,184		
24	88.0	3,439,184		
25	92.0	3,439,184		
26	96.0	3,419,184		
27	100.0	3,409,184		
28	104.0	3,379,184		
29	106.0	3,359,184		
30	108.0	3,409,184		
31	112.0	3,199,184		
32	116.0	2,569,184		
33	120.0	1,149,184		
34	124.0	679,184		
35	128.0	559,184		
36	132.0	529,184		
37	136.0	479,184		
38	140.0	459,184		
39	150.0	0.0		
40	200.0	0.0		

*DATA DERIVED FROM 260-SL-1 TEST

TABLE 3-XV INPUT DATA REQUIRED FOR RECONSTRUCTION

KEY: NRECØN = 1

VARIABLE NAME	TYPE	VALUE IF NOT INPUT	REQUIRED BY INDICATOR	INPUT DATA PACKAGE	NAMELIST
NRECØN = 1	INTEGER	0	---	CØNTRØL DATA	INPUT1
BIAS DATA*	REAL	0	NRECØN=1	"	"
CONTROL SYS. DATA**	"	0	"	"	"
STATIC	LOGICAL	.TRUE.	"	"	"
NØZPØS	INTEGER	0	"	"	"
ØK(4)	REAL	100.0	"	"	"
ØK(5)	"	6.0	"	"	"
LIST1 = .TRUE.	LOGICAL	.FALSE.	---	"	"
TSREC	REAL	0.0	LIST1=.TRUE.	"	"
TEREC	"	1000.0	"	"	"
CSBAR	"	4800.0	"	"	"
PBAR	"	1000.0	"	"	"
TWEB	"	1000.0	"	"	"
PITW	"	1000000.0	"	"	"
LIST1 = .FALSE.		.FALSE.	---	"	"
PFLAG	REAL	0.0	LIST1=.FALSE.	"	"
PADJC(1)	"	0.0	"	"	"
PADJC(2)	"	0.0	"	"	"
PHEPI	"	100.0	"	"	"
ATBAR	"	3959.0	"	"	"
MPTØT	"	1676366.0	"	"	"
NLEWIS = 0	INTEGER	0	---	"	"
CSCØEF(1)	REAL	4735.23	NLEWIS=0	"	"
CSCØEF(2)	"	0.09546955	"	"	"
CSCØEF(3)	"	-0.359902×10^{-4}	"	"	"
NLEWIS = 1	INTEGER	0	---	"	"
LEWIS DATA PACKAGE+	AL.-NUM.	---	NLEWIS=1	LEWIS DATA	NONE
NPH = 0	INTEGER	0	---	IBM DATA	IBDATA
MMØTI	REAL	2000000.0	NPH=0	CØNTRØL DATA	INPUT1
MVEHI	"	5000000.0	"	"	"
MINST	"	50000.0	"	"	"

*Requires Compilation of Subroutine BIAS and Possible Addition of Variables to Common and Namelist.

**Requires Compilation of Subroutine CONT and Possible Addition of Variables to Common and Namelist.

+See Section 3.2.2: "Lewis Data Package".

TABLE 3-XV INPUT DATA REQUIRED FOR RECONSTRUCTION (CONTINUED)

KEY: NRECØN = 1

VARIABLE NAME	TYPE	VALUE IF NOT INPUT	REQUIRED BY INDICATOR	INPUT DATA PACKAGE	NAMELIST
NPH > 0	INTEGER	0	---	IBM DATA	IBDATA
PHST(I)	REAL	0	NPH > 0	"	"
TIMEPH(I)	"	0	"	"	"

IN ADDITION TO DATA LISTED ABOVE, ALL INPUT DATA REQUIRED FOR A NOMINAL PREDICTION USING THE INTERNAL BALLISTICS MODULE AND NSCE MODULE ARE REQUIRED FOR A RECONSTRUCTION.

TABLE 3-XVI VARIABLE DEFINITIONS FOR A RECONSTRUCTION

VARIABLE	DEFINITION
ATBAR	Average throat area for reconstruction. Normally the arithmatic average of initial and final throat areas. (IN^2)
CSBAR	Characteristic velocity used with PBAR to shift the theoretical c* curve for use in a reconstruction. (FT/SEC)
CSCØEF(1)	Curve fit coefficient for end item propellant theoretical c* (FT/SEC) versus nozzle stagnation pressures (PSIA). CSCØEF(1) is intercept at pressure = 0.0. ($c^* = c_1 + c_2 P_{NS} + c_3 P_{NS}^2$)
CSCØEF(2)	Curve fit coefficient for end item propellant theoretical c* (FT/SEC) versus nozzle stagnation pressure.
CSCØEF(3)	Curve fit coefficient for end item propellant theoretical c* (FT/SEC) versus nozzle stagnation pressure.
LIST1	Logical indicator which, when true, shows the following variables were input: TSREC, TEREC, CSBAR, PBAR, TWEB and PITW.
MINST	Mass of SRB inert structure, not including motors. (LBM) (FLIGHT ONLY)
MMØTI	Initial total mass of the motor being reconstructed including propellant, case, insulation, nozzle, etc. (LBM)
MPTØT	Total propellant mass loaded into the motor being reconstructed (LBM)
MVEHI	Mass of Shuttle vehicle at launch. (LBM) (FLIGHT ONLY)
NLEWIS	Indicator for a Lewis Run. NLEWIS = 0: No LEWIS Subroutine execution, NLEWIS = 1: LEWIS Subroutine execution.
NØZPØS	Indicator for nozzle exhaust direction for a static test reconstruction. NØZPØS = -1, Horizontal; NØZPØS = 0, Up; NØZPØS = 1, Down.

TABLE 3-XVI VARIABLE DEFINITIONS FOR A RECONSTRUCTION (Continued)

VARIABLE	DEFINITION
NPH	Number of points in the arrays of head-end pressure, PHST(I), versus time, TIMPH(I). Maximum of 70 points.
NRECØN	Indicator used to establish a prediction or reconstruction. NRECØN = 0: Prediction, NRECØN = 1: Reconstruction.
ØK(4)	Characteristic velocity correction increment for Reconstruction. (FT/SEC)
ØK(5)	Iteration limit for a reconstruction.
PADJC(1)	Slope of pressure adjustment term in reconstruction. Used to adjust measured head-end pressure to nozzle stagnation pressure. $P_{NS} = P_H$ - (PADJC(1)*TIME + PADJC(2))
PADJC(2)	Intercept of pressure adjustment term in reconstruction. Used to adjust measured head-end pressure to nozzle stagnation pressure. (PSIA) $P_{NS} = P_H$ - (PADJC(1)*TIME + PADJC(2))
PBAR	Time average nozzle stagnation pressure used with CSBAR to shift the theoretical c* curve for a reconstruction. (PSIA)
PFLAG	Pressure level at which initial reconstruction calculations are started and ended. (PSIA)
PHEPI	Percentage of head-end pressure integral which defines TWEB. (%)
PHST(I)	Array of head-end total pressure during a reconstruction. This is the dependent array; See TIMEPH(I) as independent array. (PSIA)
PITW	Head-end pressure integral used to calculate TWEB. (PSIA-SEC)
STATIC	Logical indicator used in a reconstruction to establish a static test or flight. STATIC = .TRUE.: Static Test. STATIC = .FALSE.: Flight.
TEREC	Time to end integration of pressures in a reconstruction. Set equal to time when the head-end pressure tailoff reaches PFLAG. (SEC)

TABLE 3-XVI VARIABLE DEFINITIONS FOR A RECONSTRUCTION (Continued)

VARIABLE	DEFINITION
TIMEPH(I)	Array of time during a reconstruction. Independent array, PHST(I) is the dependent array. (SEC)
TSREC	Time to start integration of pressures in a reconstruction. Set equal to time when the head-end pressure buildup reaches a value equal to PFLAG. (SEC)
TWEB	Web time of a grain for a reconstruction. Define as the time of occurance of a percentage of the total head-end pressure integral. (SEC)

3.4.7 (Continued)

Punched card output is available when the IBM performance prediction option is exercised. Punched cards are generated by setting the input indicator NCARD=1 in the Control Data Package.

Data tape and plot tape output may be obtained from an IBM performance prediction by setting the indicators NTAPE=1 (data tape, Internal I/O Unit 12) and NPLØT=1 (plot tape, Internal I/O Unit 13). NTAPE and NPLØT are input through the Control Data Package.

3.5 INTERNAL BALLISTICS OPTIONS

The input data options for the Internal Ballistics Module are shown graphically in Figure 3-6. Many of the indicators and variables included as input to the Internal Ballistics Module are initialized in Subroutine IBM. If the initial or "standard" value is the desired input value, then the term need not be included in the data deck. This substantially reduces the number of terms which must be included as input.

The input data section of the Boeing Internal Ballistics Program User's Guide (Reference 6) has been adapted for this document and is given in the following paragraphs. Definitions of all input variables are given in Tables 3-XVII through 3-XXII. In addition to these data, the "Inert" mass data of Table 3-XII are required inputs.

3.5.1 Grain Geometry

For analysis purposes the motor is divided into three sections, aft-head, fore-head, and cylindrical. The cylindrical section is subdivided by a number of input reference planes (minimum of two and a maximum of eighteen) that describe local grain geometry. The region between the reference planes is divided into a number of smaller regions by increment dividing planes for calculating the internal gas dynamics, Figure 3-8. The cylindrical section may be divided into as many as one hundred mass addition regions.

In each of the three sections, various options are available. Typical motor configurations that can be analyzed are shown in Figure 3-9. Motor designs with both internal and external taper, monolithic and segmented propellant sections can be analyzed. The capabilities, limitations, and inputs for the aft-head, fore-head, and cylindrical section are discussed in the following paragraphs.

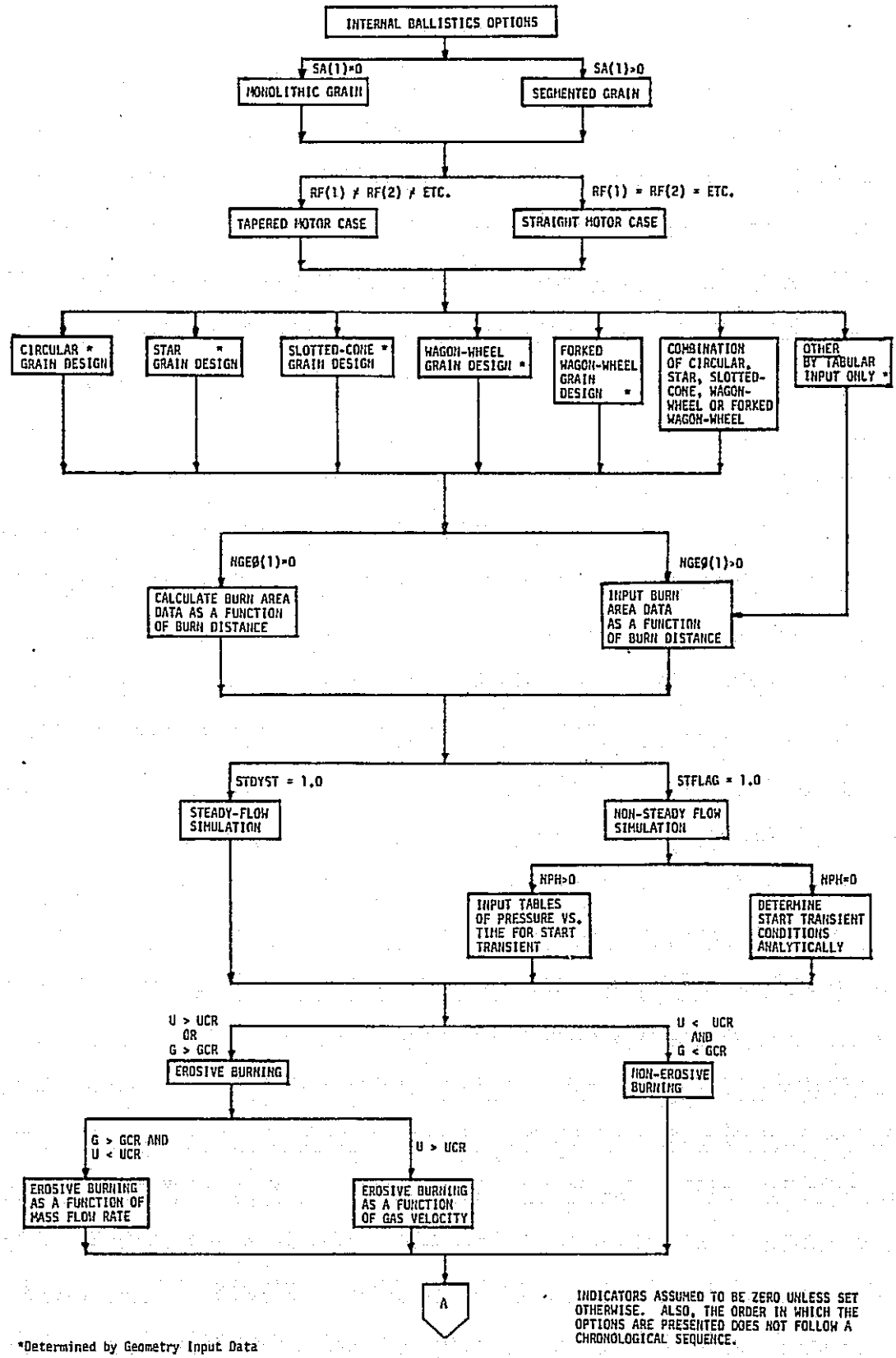

FIGURE 3-6 INTERNAL BALLISTICS MODULE OPTIONS TREE

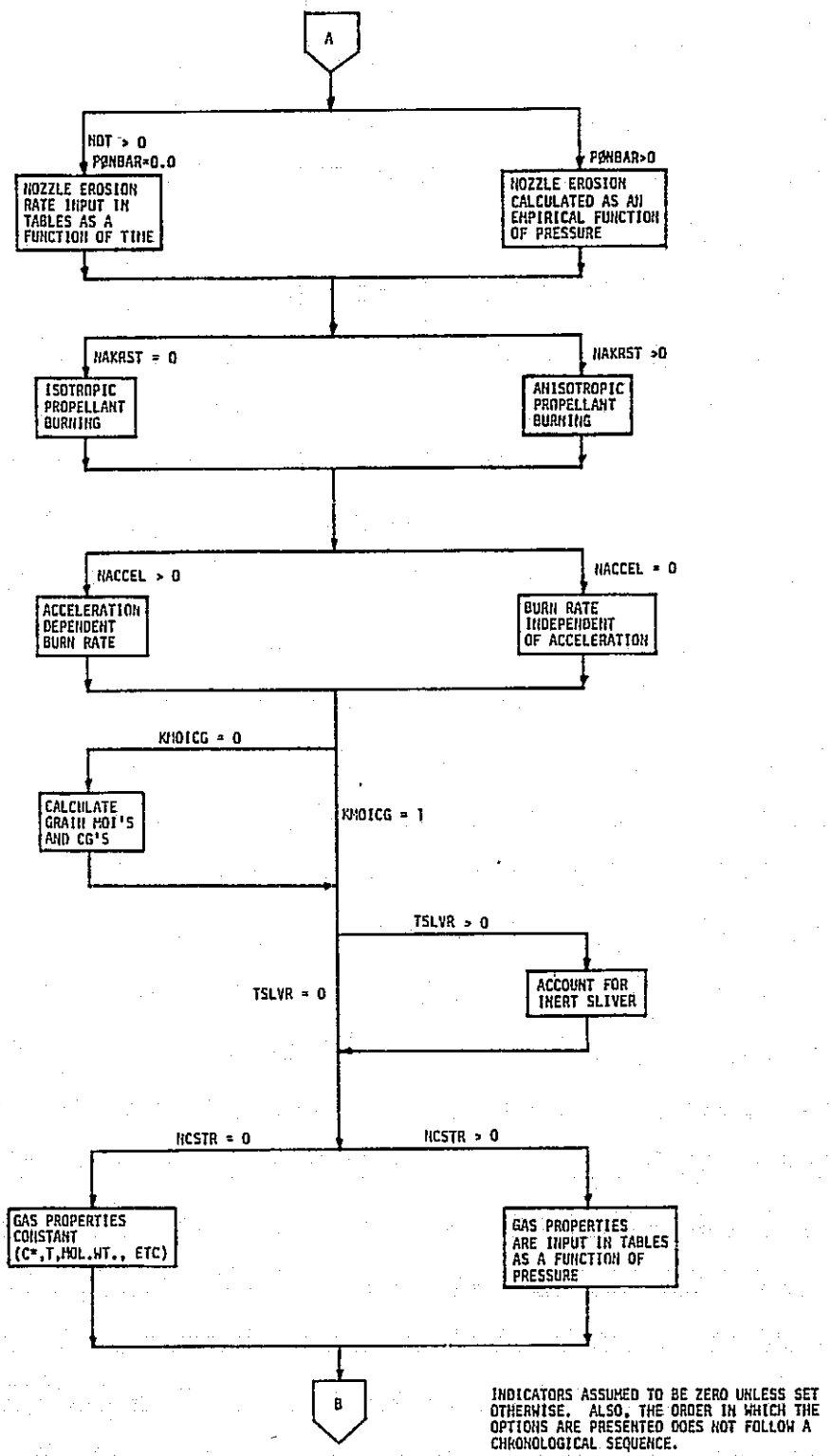

FIGURE 3-6 INTERNAL BALLISTICS MODULE OPTIONS TREE (CONTINUED)

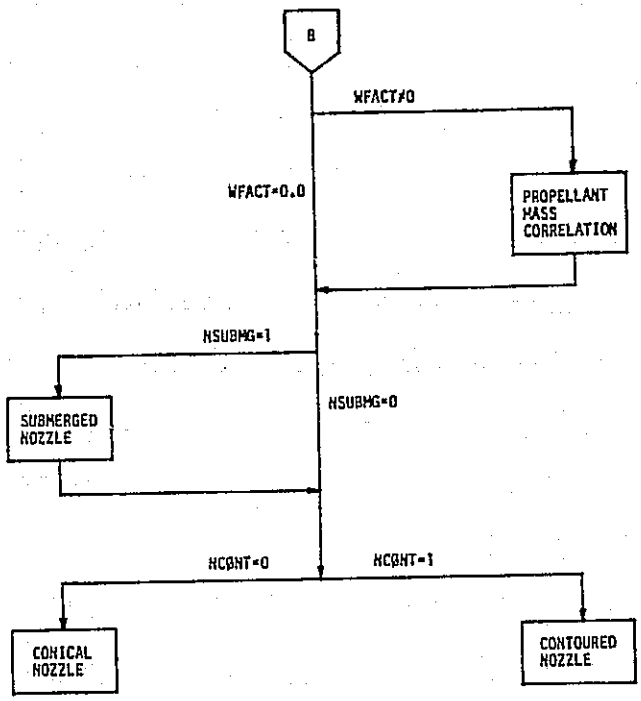

INDICATORS ASSUMED TO BE ZERO UNLESS SET OTHERWISE. ALSO, THE ORDER IN WHICH THE OPTIONS ARE PRESENTED DOES NOT FOLLOW A CHRONOLOGICAL SEQUENCE.

FIGURE 3-6 INTERNAL BALLISTICS MODULE OPTIONS TREE (CONTINUED)

3.5.1.1 Aft-Head Section

Two grain geometry options are available: a straight through grain, where the port cross-section is the same as that at the aft tangent plane, or an input table of burning area versus distance burned. The latter is generally used when a submerged nozzle or complex grain designs are considered. A typical straight through grain configuration is shown in Figure 3-10. The required grain geometry input at the aft tangent plane is discussed below under the heading "Cylindrical Section", Section 3.5.1.3. Inputs required for simulating a submerged nozzle are discussed in Section 3.5.5.

The dome external contour is made up by a combination of elliptical and conical configurations. Figure 3-11 shows necessary inputs to describe the aft dome shape.

The input values are 1) BN, 2) DN1, 3) AØNM, and 4) DLRF. The term BN defines the ratio of the ellipse semi-axis perpendicular to the motor axis to the semi-axis coincident with the motor axis. The case opening diameter is specified by the value of DN1. The maximum allowable angle between the tangent to the ellipse section and the motor centerline at the plane of the case opening is AØNM. To define the end section, the program first computes the value of angle ANR. This angle is defined by the tangent to the ellipse and the motor axis at a diameter equal to DN1. If the value of ANR is less than or equal to the value of AØNM, then the elliptic contour is assumed to terminate at the case opening diameter. If, however, the value of ANR is greater than the value of AØNM, then the elliptic contour is terminated at the point where the angle between the tangent to the ellipse and the motor axis is equal to the value of AØNM. From this point, a frustum of a cone tangent to the ellipse is extended to the case opening diameter.

Desired accuracy of the burning surface area and initial volume are governed by the input DLRF. As this value approaches zero, the calculations approach an exact solution at any value of thickness burned. A typical value is 0.01.

Certain limiting requirements must be satisfied for the end dimensions as follows:

1. The value of DNI/2 must be less than or equal to the value of RF in the reference plane adjacent to the end section.

2. The value of AØNM must be greater than zero.

3. The value of BN must be either

   a. Equal to 1.00 (hemispherical end),

   b. Equal to or greater than 1.01 (oblate spheroid end) or

   c. Equal to or less than 0.99 (prolate spheroid end).

3.5.1.1 (Continued)

If any of these restrictions is exceeded, the program will automatically stop and print out a statement identifying the restriction.

Propellant cutback is considered if DN1/2 is greater than P1, (Figure 3-11). If this occurs, burning will occur on the aft face. The grain configuration shown in Figure 3-11 illustrates end burning.

If the input DN1 is such that the resulting length of the aft dome is less than the maximum web thickness of the aft tangent plane grain geometry, then the difference between these lengths will be added to the initial dome length making it equal to the maximum web thickness. This prevents the aft face from burning into the cylindrical section.

If the burning area table option is used, BN, DN1, AØNM, and DLRF are not required. Burning area versus distance burned and the total dome and propellant volume for the aft-head section are the required inputs. If grain moments of inertia and center of gravity are to be determined, this data also becomes required input.

3.5.1.2 Fore-Head Section

Three grain geometry options are available. They are straight through grain, burning area table, and a head-end with web. The first two are the same as discussed above in the aft-head section.

The inputs for the straight through grain option are: 1) BH, 2) DH1, and 3) AØHM. Definitions of these inputs and the corresponding limitations are identical to the equivalent aft-end section inputs and limitations. The fore-head increment sizes are set by the dimensionless ratio DLRF, the same as the aft-end increment sizes. In the forehead, however, RF is the outside propellant radius of the forward tangent plane. Likewise, the calculation of the fore-head section length is based on the maximum web thickness of the forward tangent plane grain geometry.

The third option is a head-end with web as shown in Figure 3-12. Required inputs are: 1) BH, 2) BTAØE, 3) RIG, 4) AK, 5) DRVRF, and 6) AKK. Note that the dome outer contour can only be an elliptical configuration. The definition of BH is the same as that for a straight through grain. The term BTAØE represents the ratio of the head-end with web ellipse semi-axis normal to the motor axis to the ellipse semi-axis which lies on the motor axis. In addition to defining the propellant internal coutour, BTAØE is used to transfer the program to the head-end with web solution. If the value BTAØE is non-zero, the head-end with web solution is used. The term RIG is the radius of the igniter opening, which is assumed to be inhibited on the internal surface. The centers of the ellipses defined by BH and BTAØE are always assumed to be coincident. The reference fore-head length, HHR, is always measured

3.5.1.2 (Continued)

from the center of the fore-head ellipse closure. A restriction to the head-end with web solution requires that the initial propellant surface reach the igniter opening. If this restriction is exceeded by using too small an input value for BTAØE, the program will stop and print a statement that the head-end with web fraction is negative.

Burning surface area and initial volume calculations for the head-end with web are based on approximate integrations of surface and volume increments. Initial values of the required increment sizes, DRV and DL, are computed in the same manner as DL for a straight through grain. In subsequent calculations, the increment sizes are modified by the input constants AK and AKK, which adjust the increment sizes to account for changes in the configuration during burning. The input values of AK and AKK are the primary factors in determining accuracy and execution time for the head-end with web calculations. As these terms approach zero, the calculations approach exact solutions. Input value AK controls the accuracy of the burn surface area calculations, and input value AKK controls the accuracy of the initial volume calculations. A recommended value for these terms is 0.50.

Values of propellant volume in both end sections at any thickness other than zero are computed by means of approximate integration of burning surfaces with respect to thickness burned. These integrated volumes are subtracted from the previous volume to give instantaneous volumes at any time. Because of this process, the final propellant weight at complete burnout is likely to be some value other than zero. As the time increment input approaches zero, the calculation for instantaneous propellant weight approaches an exact solution.

3.5.1.3 Cylindrical Section

The cylindrical section is that section lying between the forward and aft tangent planes. The cylindrical section length is designated as input HCØ. Various grain geometry options exist as shown in Figure 3-13. The grain may be either monolithic or segmented.

The cylindrical section is described for input by dividing it into a number (maximum of 18) of geometrical reference planes, Figure 3-14. These reference planes are used in describing the grain geometry at a particular location. They are designated by AINCIN(1)...AINCIN(18) and are placed at desired distances from the forward tangent plane.

The value of AINCIN(1) must always be zero, thus placing the first plane at the forward tangent plane. Likewise, the AINCIN value of the last plane used must be equal to the value of HCØ, thus placing the last plane at the aft tangent plane.

3.5.1.3 (Continued)

The general forked wagon wheel configuration for an input reference plane is shown in Figure 3-15. The following are required inputs:

ANØ(I)	R4(I)	ALS1(I)	AØ1(I)
RF(I)	R5(I)	ALS2(I)	AØ2(I)
TAUW(I)	R6(I)	ALA(I)	AØ3(I)
R2(I)	R7(I)	ALB(I)	AØ4(I)
R3(I)	R8(I)	ALE(I)	AØ5(I)

ANØ is the number of symmetrical sectors. The segment lengths ALC and ALD are not input.

Figures 3-16 and 3-17 show the inputs and calculated plane constants for the general forked wagon wheel configuration. The calculated plane constants allow the user a means of checking if the proper grain design is being analyzed. Although the program is designed to solve the general configuration shown in Figure 3-15, there are certain variations of this configuration that exceed the mathematical limits of the analysis. To obtain a program solution, all of the following conditions must exist for each reference plane used:

R1	must be greater than or equal to zero
R3	must be less than or equal to T2M
R7	must be less than or equal to T12M
R9	must be greater than or equal to zero
ALC	must be greater than or equal to zero
ALD	must be greater than or equal to zero
B71M	must be greater than or equal to zero
B91M	must be greater than or equal to zero
AØ1	must be less than 90° and greater than or equal to AØ2
AØ2	must be greater than or equal to zero
AØ3	must be less than 90° and greater than or equal to AØ2
AØ4	must be greater than or equal to zero
AØ5	must be less than 90° and greater than or equal to AØ4
TH4	must be greater than or equal to zero

If any of these restrictions are exceeded for any reference plane, the program will automatically stop and will print the reference plane dimensions along with a statement of the exceeded restriction. Although the program is self-checking for these mathematically invalid configurations, there are some physically invalid configurations for which there is no such check. For example, such a situation will occur in a case where a value of an ANØ input is not a whole number, and the program will yield valid mathematical solutions that are physically impossible. To avoid such problems, it is suggested that the user visually review a sketch of each reference plane input configuration before attempting to obtain a program solution.

Special attention should be given to the manner in which input lengths ALA, ALB, and ALE are defined. The length ALA is measured <u>along</u> a common

3.5.1.3 (Continued)

tangent to the arcs generated by radii R2 and R3 (Figure 3-15). One of the points that defines this length is the point of tangency with the arc generated by the radius R2. However, the other point that defines length ALA is not the point of tangency with the arc generated by radius R3. This end limit of length ALA is determined by bisecting the angle subtended at the center of the arc generated by radius R3 and extending this bisector until it intersects the axis of symmetry of the grain sector. From this intersection point, a perpendicular to line ALA is erected. The intersection of this perpendicular and the line ALA is the point which defines the end of length ALA. An expanded sketch showing the definition length of ALA is shown in Figure 3-18. Line lengths ALB and ALE are defined in a similar manner.

Figure 3-19 shows the inputs required for the wagon wheel grain configuration.

Figure 3-20 shows the inputs required for the standard star grain configuration.

Figure 3-21 shows the inputs required for the slotted-cone grain configuration. Burning area tables are always required for the fore and aft-head region with this grain configuration. In addition to the standard star input of Figure 3-20 an additional parameter THØ is required.

Figure 3-22 shows the inputs required for a circular port grain configuration.

The inert sliver option can be used for the wagon wheel, star, and slotted-cone grain configurations. If the inert sliver option is used, the distance burned on the inert sliver TSLVR(I) must be input. Inert slivers are considered only in the cylindrical section. TSLVR(I) is also required to be equal to or greater than the web thickness, TAUW(I).

An input is required for the incremental distance burned before and after web time. These inputs are DTAU(I) and DTAUW(I) and are used in generating tables of geometry data versus distance burned for the reference planes and end sections.

If there is a special grain configuration to be analyzed that the program options do not include, this can be analyzed by inputting a table of port perimeter versus distance burned in place of the grain geometry inputs. The initial port cross-sectional area is also required. When this option is used, the burning area versus distance burned is required for both the fore and aft-head sections. The required inputs are identical to the inputs that were described in the fore and aft-head sections. When this option is used, moments of inertia and centers of gravity for the fore-head, aft-head, and cylindrical sections will be bypassed unless they too are input for each reference plane and end section.

The cylindrical section must also be described for input by dividing it by a number of increment dividing planes (a maximum of 101) where

3.5.1.3 (Continued)

the region between adjoining increment dividing planes is called a mass addition region, Figure 3-14. Spacing of the increment dividing planes is controlled by an input parameter DELZ. The increment dividing planes are located at each input reference plane and spaced DELZ from each reference plane until either a segment or the next reference plane is reached. This procedure is repeated and terminates at the aft tangent plane of the motor case.

The location of the initial forward and aft segment faces should be input if applicable. These inputs are SA(I) and SB(I), respectively.

3.5.2 Propellant Properties

Propellant properties are defined by input 1) TØ, 2) GAMA, 3) R, 4) DELF and 5) CSTAR. These inputs, in the order shown, are stagnation temperature, specific heat ratio, gas constant, solid-propellant density, and characteristic velocity. TØ, R, and DELF are used in the gas dynamic analysis along the grain, whereas CSTAR and GAMA are used to calculate nozzle flow rate and thrust coefficient, respectively. Both TØ and CSTAR are not required; given GAMA and either of these, subroutine INPT will calculate the other.

To more accurately represent the propellant gas properties, arrays of temperature, γ, molecular wt., and c* versus pressure can be input. Also, c* can be determined by the reconstruction module or one of the specific impulse modules, in which case it need not be input.

3.5.3 Burning Rate Inputs

Propellant burning rate, RB, at any increment dividing plane, may be computed in terms of the following values at the adjacent increment dividing plane in the upstream direction:

1.	Static pressure	P
2.	Gas velocity	U
3.	Mass velocity per unit area	G
4.	Distance from stagnation point	NRB
5.	Burning rate	RBHI
6.	Solid propellant density	DELF

With the exception of DELF, these values are not input but are calculated within the program.

3.5.3 (Continued)

Fifty-one constants are available to define the burning rate equation. Only the constants that are required for the particular burning rate equation to be used are input; the remaining constants are not input. These constants are as follows:

AKG(1) through AKG(5)

AKU(1) through AKU(5)

AKR(1) through AKR(39)

AKSLØT(1) and AKSLØT(2)

Prior to calculating burning rate, critical values of velocity, UCR, and mass velocity per unit area, GCR, are obtained as follows:

$$UCR = AKU(1) + AKU(2) \cdot P^{AKU(3)} + AKU(4) \cdot P^{AKU(5)}$$

$$GCR = AKG(1) + AKG(2) \cdot P^{AKG(3)} + AKG(4) \cdot P^{AKG(5)}$$

Propellant burning rate is then calculated in one of two ways.

If G is greater than or equal to GCR or U is greater than or equal to UCR, the following relationship is used:

$$\begin{aligned} RB = \; & AKR(1) + AKR(2) \cdot P^{AKR(3)} + AKR(4) \cdot P^{AKR(5)} + AKR(6) \cdot U^{AKR(7)} \\ & + AKR(8) \cdot U^{AKR(9)} + AKR(10) \cdot G^{AKR(11)} + AKR(12) \cdot G^{AKR(13)} \\ & + AKR(14) \cdot P^{AKR(15)} \cdot U^{AKR(16)} + AKR(17) \cdot P^{AKR(18)} \cdot U^{AKR(19)} \\ & + AKR(20) \cdot P^{AKR(21)} \cdot G^{AKR(22)} + AKR(23) \cdot P^{AKR(24)} \cdot G^{AKR(25)} \\ & + AKR(26) / [AKR(27) \cdot P^{AKR(28)} + AKR(29) \cdot P^{AKR(30)}] \\ & + [AKR(31) \cdot G^{AKR(32)} / HRB^{AKR(33)}] \cdot e^{-[AKR(34) \cdot RBHI \cdot DELF/G]} \end{aligned}$$

The fore-head reference length (HHR) used in calculating HRB must be input if fore-head burn data arrays are input. If the value of G is less than GCR and the value of U is less than UCR, then erosive burning does not exist and the following relationship is used.

$$RB = AKR(35) + AKR(36) \cdot P^{AKR(37)} + AKR(38) \cdot P^{AKR(39)}$$

3.5.3 (Continued)

To prevent the values of GCR and UCR from being used simultaneously for choosing the burning rate model, one of these values must always be equal to zero. This is accomplished by setting the values of constants AKG(1), AKG(2) and AKG(4) or the values of constants AKU(1), AKU(2) and AKU(4) equal to zero. The program will automatically stop if any of the terms AKG(1), AKG(2) or AKG(4) are not equal to zero when any of the terms AKU(1), AKU(2) or AKU(4) are also not equal to zero. In such cases, the program will print a statement that the GCR or UCR coefficients are invalid. If AKR(26) is not equal to zero, then neither AKR(27) nor AKR(29) can be negative or simultaneously equal to zero. If this restriction is exceeded, the program will stop and print a statement of invalid AKR(27) or AKR(29).

The burning rate at the segment slot face is calculated by:

$$RBSLØT=AKSLØT(1).P^{AKSLØT(2)}$$

where P is the static pressure in the port at the segment interface.

For anisotropic burning, arrays of burn rate coefficients, AKRTAU(I), versus burn distance, TAUAKR(I) are required. Then the burn rate equation becomes

$$RB=AKRTAU(I).P^{AKR(3)}$$

Anisotropic burning is simulated only during the buildup and tailoff intervals, and the same arrays may be used for both intervals. One option exists here for burning in the fore-head and aft-head sections. If the values of AKRH and AKRN are set to zero, the AKRTAU(I) versus TAUAKR(I) data will be used for the fore-head and aft-head sections. If it is desired that anisotropic burning not be considered in the end sections, AKRH and AKRN are set equal to AKR(2) and AKR(36).

Propellant burn rate is frequently a function of the distance burned radially for a given pressure. This may be due to a significant temperature gradient through the grain or variations in the composition of the propellant constituents in the radial direction. An example of the latter occurs when the predominant alignment of oxidizer particles varies between the bulk of the propellant and the core interface or the case wall.

The inputs required to account for radial burn rate variation are NAKR, NAKEND, TIMAKR(I), and TBLAKR(I). A burn rate adjustment factor (AKRADJ) is determined from the TBLAKR(I) array as a function of the time array TIMAKR(I). The time points in the TBLAKR(I) array correspond to radial burn distances for which burn rate variation data points are given. NAKEND determines whether or not AKRADJ will be applied in the end sections.

3.5.4 Nozzle Configuration

The nozzle configuration, Figure 3-23, is input for two purposes. One, to calculate throat area which in turn is used to determine nozzle flow rate. The other is to provide the parameters required to calculate the nozzle thrust coefficient.

Required inputs are DT, DE, and ANN (if other than 1). Also, one option in each of the following sets must be input:

Ambient Pressure: Input as a constant (PA) or as a variable with respect to time (NPA, TIMEPA(I), and TBLPA(I)).

Nozzle Efficiency: Input as a constant (CM) or as a variable with respect to time (NCM, TIMECM(I), and TBLCM(I)).

Nozzle Erosion: Input as a variable with respect to time (NDT, TDELDT(I), and TIMEDT(I)) or as a variable with respect to nozzle stagnation pressure (ERBAR, PØNBAR, EREXP). If no nozzle erosion is desired, then no inputs are required.

Nozzle Contour: Three possibilities exist for describing the nozzle contour. The nozzle contour must be described so that a divergence flow loss factor can be determined for use in the thrust calculation.

(1) For a conical nozzle, the nozzle cone half-angle, AN2, is required. Also, the contoured nozzle indicator, NCØNT, must be input as zero.

(2) For a contoured or bell-shaped nozzle, the nozzle half-angle can be approximated as the average of the initial and final nozzle angles. These inputs are AN2 and THETEX, respectively. NCØNT must be input as 1.

(3) If data is available for theoretical specific impulse for a conical and contoured nozzle, a more precise determination for the effective contoured nozzle half-angle is possible. This type of data is available from the Axisymmetric Two-Phase Perfect Gas Performance Program, ATPAP (Reference 8). This program can be used to calculate the ratio of the theoretical specific impulse for the actual nozzle contour to the theoretical specific impulse for an equivalent conical nozzle. This ratio is called SIRATC and is input along with the equivalent conical nozzle half-angle, AN2 and NCØNT=1.

The form of the delivered thrust coefficient, CF, is:

$$CFC = \left\{ \left[\frac{2(GAMA)^2}{GAMA-1} \right] \left[\frac{2}{GAMA+1} \right]^{\left(\frac{GAMA+1}{GAMA-1}\right)} \right\}^{\frac{1}{2}}$$

3.5.4 (Continued)

$$CF = \left\{ CFC \left[\left(1-\frac{PE}{PON}\right)^{\left(\frac{GAMA-1}{GAMA}\right)} \right]^{\frac{1}{2}} \left[.5+.5\ COS(AN2)\right] + \left[\left(\frac{PE}{PON}\right) EP1\right] \right\} CM - \left(\frac{PA}{PON}\right) EP1$$

where PE is the exit plane static pressure, PA is the ambient pressure, and EP1 is the exit cone expansion ratio.

3.5.5 Nozzle Submergence

Solid propellant rocket motors are commonly restricted in total length for numerous reasons. Inserting or submerging the nozzle some distance into the motor chamber may be desirable for use on motors with a length restriction. This nozzle submergence permits a longer motor chamber with more propellant.

Nozzle submergence introduces performance losses. These losses are primarily due to entrance effects, two phase flow effects, and flow field effects. Nozzle submergence also introduces additional considerations for the internal ballistics simulation. As shown in Figure 3-24, a portion of the propellant grain is located aft of the nozzle entrance plane and requires a reversed flow region which allows the mass generated in the submerged area to exit the motor. In order to correctly simulate this phenomena, a different convergence scheme for the submerged nozzle case is required in the Internal Ballistics Module. This scheme requires the simulation of the stagnation regions and the flow field for the reversed flow.

Required inputs for an internal ballistics simulation with a submerged nozzle are listed below. These input variables are defined in detail in Table 3-XVIII and several of these variables are shown in Figure 3-24.

(1) Nozzle submergence indicator, NSUBMG. Always input as one for a submerged nozzle simulation.

(2) Submergence distance from aft tangent plane, HSUBMG.

(3) Length of the cylindrical portion of the aft dome, DELH. Not required for a nozzle that is only slightly submerged into the aft dome.

(4) Maximum burn distances in Regions A and B, TAUMNA and TAUMNB, respectively.

(5) Nozzle entrance coordinate data; TRSUB(I), TXSUB(I), and NPSUB.

(6) Region B port area data; TA1B(I), TA2B(I), and TAUNB(I).

3.5.5 (Continued)

With grain configurations for which the Internal Ballistics Module cannot automatically calculate the aft-end geometry, additional input data may be required. These data are burn areas, moments of inertia, centers of gravity, and propellant and chamber volume for Regions A and B. The complete list of these possible inputs is given below. Each variable is defined in detail in Table 3-XIX.

The following dependent arrays are functions of the independent array TAUN(I):

(1) Burn area for each region, ABNA(I) and ABNB(I).

(2) Grain roll moment of inertia for each region, PMØINA(I) and PMØINB(I). Required only when KMØICG=0.

(3) Grain pitch moment of inertia for each region, RMØINA(I) and RMØINB(I). Required only when KMØICG=0.

(4) Grain center of gravity for each region (relative to the aft tangent plane), XCGNA(I) and XCGNB(I). Required only when KMØICG=0.

The following variables are not functions of other variables;

(5) Case volume for both regions, VCNINA and VCNINB. The total aft case volume, VCNINP, should also be input. This is simply VCNINA plus VCNINB.

(6) Propellant volume for both regions, VFNØA and VFNØB. The total aft-end propellant volume, VFNØ, should also be input. This is simply VFNØA plus VFNØB.

3.5.6 Internal Gas Dynamics

The Internal gas dynamics along the propellant grain can be based on either steady or non-steady flow, depending on choice of input. The influence of an accelerating reference system can also be considered. The exactness of the internal ballistic calculations is dependent upon two parameters, time interval between calculations, and the number or size of the mass addition regions along the cylindrical section. The mass addition region size is determined by the input value of DELZ. The computation time interval is discussed below.

The internal ballistic solutions based on steady flow are calculated independent of the preceding time point and do not include mass and momentum storage terms in the equations. However, the internal ballistics that are calculated based on non-steady flow account for volume change of the mass addition region and storage of mass and momentum within the mass addition region. The addition of the non-steady flow

3.5.6 (Continued)

terms to the momentum and continuity equations enables the program to be used for calculating ignition transients.

Steady Flow

In order to simulate steady flow internal gas dynamics, STDYST is set to 1.0 and STFLAG is set to 0.0. An initial guess for the fore-head pressure, PHI, is required. The necessary time control inputs are DELTSS, DELTTØ, and ANITW. These are discussed in Section 3.5.7.

Non-Steady Flow

In order to simulate non-steady flow, STFLAG is set to 1.0, and STDYST is set to 0.0. The initial guess for the fore-head pressure, PHI, is input, however, unlike the case of steady flow, PHI must be input as twice the value desired. For example, if a start transient is started with an ambient value of 14.7 for the fore-head pressure, then PHI=29.4.

When exercising the option to input a buildup pressure trace and thus compute "a" (in $r=ap^n$), the trace is input as the pressure array, PHST(I), versus the time array, TIMEPH(I). NPH is also input to specify the number of points in these arrays and PHI should be input as twice the value of PHST(1). AINCPL is the desired increment plane location at which the constant "a" is to be evaluated.

The necessary time control inputs are DELTST, DELTSS, DELTTØ, ANITW, and one of the start transient termination point inputs, TST, PST, or AITST. All of these time control inputs are discussed below.

At the end of the start transient, the value of the computed constant "a", or AKR(2) and AKR(36) of the input burn rate equation, may be used for the remaining calculations. If RBFLAG=0.0, AKR(2) and AKR(36) will be used during the web-time and tail-off calculations. If RBFLAG=1.0, then the last value of "a" will be used in place of AKR(2) and AKR(36) during the web-time and tailoff calculations.

3.5.7 Time Control Inputs

Several options are available to define the calculation time interval. Output from the internal ballistics module is provided after each calculation cycle, therefore, time interval input data simultaneously control module calculation and printout intervals.

The time increments used during the start transient, steady-state or web-time, and tailoff intervals are DELTST, DELTSS, and DELTTØ, respectively. If a start transient is simulated, DELTST must be non-zero. The start transient interval can be terminated by either inputs of time, TST, fore-head pressure, PST, or total impulse, AITST. The steady-state time

3.5.7 (Continued)

increment DELTSS is used during the web-time interval and is used until the tail-off interval begins. Tail-off starts when web burnout occurs at a number of increment dividing planes which equals or exceeds ANITW. If ANITW is not input, a value of 1.0 is automatically assumed. The tail-off increment DELTTØ is used until run termination occurs.

A simulation is normally terminated when the pressure ratio across the nozzle is insufficient to maintain sonic flow at the throat. The program can also be terminated earlier by the TIMAX flag, i.e., when time reaches or exceeds TIMAX.

An option exists by which a special time increment may be used. This increment is DELTSP and will override any other program time increment between the input time values of TIMPT1 and TIMPT2.

3.5.8 Propellant Mass Correlation

The Internal Ballistics Module determines initial propellant mass from the inputs for propellant density and the propellant grain dimensions. Tolerances characteristic in measuring propellant dimensions and determining propellant density may be such that the mass calculated with these inputs may vary slightly from the mass determined by actually weighing a propellant grain. These inaccuracies can be compensated for with a program option called propellant mass correlation. Figure 3-7 presents the logic flowchart for this correlation which is performed in subroutine SETPH.

Four possibilities are available for the program user. 1) Decide to make no correlation; 2) adjust the propellant mass by biasing the average propellant density, 3) adjust the propellant mass by biasing the grain dimensions, or 4) adjust the propellant mass by biasing the propellant density and the grain dimensions. Density adjustments are made internally but grain dimension adjustments must be made through the input data.

Related inputs are 1) WFACT, 2) RHØTØL, and 3) WFTØL. WFACT is the actual fuel weight which would be known from grain weighing measurements. If WFACT is not input, no propellant mass correlation is performed. RHØTØL is the maximum amount allowed for a density adjustment. WFTOL is the minimum difference between WFACT and the calculated fuel weight which will be considered to be significant enough to perform a correlation.

TABLE 3-XVII VARIABLE DEFINITIONS FOR MOTOR CASE AND PROPELLANT GRAIN GEOMETRY FACTORS

VARIABLE	DEFINITION
AINCIN(I)	Reference plane location measured from forward tangent plane. See Figure 3-14. (IN)
AK	Adjusting factor which determines the distance between planes for the head-end web analysis and the end section analysis. A value of 0.5 is recommended. Required only when simulating a head-end with web.
AKK	Adjusting factor used in the head-end web block 2 analysis to determine distance between planes. A value of 0.5 is recommended. Required only when simulating a head-end with web.
ALA(I)	Perimeter length of sector ALA for a reference plane. See Figures 3-15, 3-18 and 3-19. (IN)
ALB(I)	Perimeter length of sector ALB for a reference plane. See Figure 3-15. (IN)
ALE(I)	Perimeter length of sector ALE for a reference plane. See Figure 3-15. (IN)
ALS1(I)	Length of web to inner grain point of a reference plane. See Figures 3-15, 3-19 and 3-20. (IN)
ALS2(I)	Length of web to outer grain point of a reference plane. See Figure 3-15. (IN)
ANØ(I)	Number of grain cross-sectional symmetrical parts for a reference plane. This works out to be half the total number of "pie slices" as shown in Figures 3-15 and 3-19 through 3-22.
AØHM	Maximum allowable angle between tangent to forehead ellipse and motor centerline. See Figure 3-11. (DEGREES)
AØNM	Maximum allowable angle between tangent to forehead ellipse and motor centerline. See Figure 3-11. (DEGREES)
AØ1(I)	Reference plane angle of side ALA. See Figures 3-15 and 3-19 through 3-21. (DEGREES)
AØ2(I)	Reference plane angle of side ALB. See Figures 3-15 and 3-19 through 3-21. (DEGREES)

TABLE 3-XVII VARIABLE DEFINITIONS FOR MOTOR CASE AND PROPELLANT GRAIN GEOMETRY FACTORS (Continued)

VARIABLE	DEFINITION
AØ3(I)	Reference plane angle of side ALC. See Figure 3-15 and 3-19 through 3-21. (DEGREES)
AØ4(I)	Reference plane angle of side ALD. See Figure 3-15. (DEGREES)
AØ5(I)	Reference plane angle of side ALE. See Figure 3-15. (DEGREES)
BH	Fore-head case ellipse ratio. The value of BH must be either a. Equal to 1.00 (hemispherical end) b. Equal to or greater than 1.01 (oblate spheroid end) c. Equal to or less than 0.99 (prolate spheroid end) See Figure 3-12.
BN	Aft-head case ellipse ratio. See BH definition above and Figure 3-11.
BTÀØE	Ratio of (head-end web ellipse axis normal to motor axis) to (ellipse axis parallel with motor axis). See Figure 3-12. Required only when simulating a head-end with web.
DELZ	Maximum length of mass addition region. See Figure 3-8. (IN)
DH1	Fore-head case opening diameter. See Figure 3-11. (IN)
DLRF	ΔL/RF, where ΔL = increment size used for the burning surface area calculations, measured along the internal perimeter in the adjacent reference plane. A value of 0.01 is recommended.
DN1	Aft-head case opening diameter. See Figure 3-11. (IN)
DRVRF	ΔRv/RF, where ΔRv = thickness of each head-end with web volume increment, and RF = outside propellant radius of adjacent or first reference plane. A value of 0.01 is recommended. Required only when simulating a head-end with web.

TABLE 3-XVII VARIABLE DEFINITIONS FOR MOTOR CASE AND PROPELLANT GRAIN GEOMETRY FACTORS (Continued)

VARIABLE	DEFINITION
DTAU(I)	Increment used in generating geometry tables as a function of distance burned. This increment is used until the web has reached the wall, then DTAUW(I) is used. See definition of DTAUW(I) below. (IN)
DTAUW(I)	Increment used beyond web thickness (TAUW) in generating geometry tables as a function of distance burned. DTAU(I) and DTAUW(I) must be chosen such that the total number of points in the geometry tables does not exceed 50. (IN)
HCØ	Length of motor's cylindrical section. See Figure 3-8. (IN)
RF(I)	Outer radius of propellant for a reference plane. See Figures 3-15 and 3-19 through 3-22. (IN)
RIG	Igniter opening radius. See Figure 3-12. (IN)
R2(I)	Radius of inner grain point for a reference plane. See Figures 3-15 and 3-19 through 3-21. (IN)
R3(I)	Fillet radius between ALA and ALB for a reference plane. See Figures 3-15 and 3-19. (IN)
R4(I)	Fillet radius between ALB and ALC for a reference plane. See Figure 3-15. (IN)
R5(I)	Fillet radius between ALC and the web for a reference plane. See Figures 3-15 and 3-19 through 3-21. (IN)
R6(I)	Fillet radius between the web and ALD for a reference plane. See Figure 3-15. (IN)
R7(I)	Fillet radius between ALD and ALE for a reference plane. See Figure 3-15. (IN)
R8(I)	Fillet radius between forks of forked wagon wheel for a reference plane. See Figure 3-15. (IN)
SA(I)	Location of slot forward interface measured from forward tangent plane. See Figure 3-14. (IN)

TABLE 3-XVII VARIABLE DEFINITIONS FOR MOTOR CASE AND PROPELLANT GRAIN GEOMETRY FACTORS (Continued)

VARIABLE	DEFINITION
SB(I)	Location of slot aft interface measured from forward tangent plane. See Figure 3-14. (IN)
TAUW(I)	Reference plane web thickness. See Figures 3-15 and 3-19 through 3-22. (IN)
THØ(I)	Reference plane central angle for a slotted-cone configuration. See Figure 3-21. (DEGREES)
TSLVR(I)	Distance from core interface to inert sliver for a reference plane. Input not required unless an inert sliver is to be simulated. See Figures 3-19 through 3-21. (IN)

TABLE 3-XVIII VARIABLE DEFINITIONS FOR NOZZLE PARAMETERS

VARIABLE	DEFINITION
ANN	Number of nozzles. Assumed to be 1.0 if not input.
AN2	Nozzle half-angle. Required for a conical nozzle (when NCØNT=0) and for a contoured or bell nozzle (when NCØNT=1). See Figure 3-23. (DEGREES)
CM	Nozzle efficiency. Not needed if the TBLCM(I) array is input.
DE	Nozzle exit diameter. (IN)
DELH	Length of the cylindrical portion of the aft dome. Assumed to be 0.0 if not input. In simulating a submerged nozzle, the nozzle entrance must remain within the aft-dome and DELH enables the aft-dome region to be expanded if needed. When DELH is input, HCØ should be reduced by the same amount. See Figure 3-24. (IN)
DT	Nozzle throat diameter. (IN)
ERBAR	Average erosion rate of the nozzle throat radius. Used only when the empirical erosion rate equation ($\dot{E}=\bar{E}(P/\bar{P})^N$) is simulated. Also, see EREXP and PØNBAR. (IN/SEC)
EREXP	Nozzle erosion rate exponent. Used only when the empirical erosion rate equation ($\dot{E}=\bar{E}(P/\bar{P})^N$) is simulated. Generally input as 1.0 when used and when more definitive data is not available. Also, see ERBAR and PØNBAR.
HSUBMG	Distance from the aft tangent plane to the nozzle inlet. Used only when a submerged nozzle is simulated. See Figure 3-24. (IN)
NCM	Number of points in the nozzle efficiency versus time arrays. Maximum allowable=50. Also, see TBLCM(I) and TIMECM(I).
NCONT	Nozzle contour indicator. Input as zero for a conical nozzle and as one for a contoured or bell-shaped nozzle. Also, see AN2, THETEX, SIRATC, and Figure 3-23.

TABLE 3-XVIII VARIABLE DEFINITIONS FOR NOZZLE PARAMETERS (Continued)

VARIABLE	DEFINITION
NDT	Number of points in the nozzle throat diameter variation versus time arrays. Maximum allowable=25. These arrays will not be used if the PØNBAR simulation is used. See TDELDT(I) and TIMEDT(I) below.
NPA	Number of points in the ambient pressure versus time arrays. Maximum allowable=50. Also, see TBLPA(I) and TIMEPA(I).
NPSUB	Number of points in the TRSUB(I) and TXSUB(I) nozzle coordinate arrays. Maximum number=20.
NSUBMG	Submerged nozzle indicator. For no submergence simulation, a value of zero is assumed. For simulating a submerged nozzle, a value of one should be input.
PA	Ambient pressure. Not required if the TBLPA(I) array is input. (PSIA)
PØNBAR	Average nozzle stagnation pressure expected during a burn. Used only when the empirical erosion rate equation ($\dot{E}=\bar{E}(P/\bar{P})^N$) is simulated. If not input, PØNBAR is automatically given a 0.0 value and this erosion rate simulation will not be used. Also, see ERBAR and EREXP. (PSIA)
SIRATC	Ratio of the theoretical specific impulse for the actual nozzle contour to the theoretical specific impulse for an equivalent conical nozzle. See "Nozzle Contour" in Section 3.5.4.
TA1B(I)	Table of port area at the forward end of region B in a submerged nozzle simulation. Input as a function of TAUNB(I) and calculated as area enclosed by propellant grain minus the nozzle entrance area. (IN**2)
TA2B(I)	Table of projected port area in the aft end of region B in a submerged nozzle simulation. Input as a function of TAUNB(I) and calculated as the port area at the aft-most propellant point in region B minus the external area of the nozzle at the submergence point in the case. (IN**2)

TABLE 3-XVIII VARIABLE DEFINITIONS FOR NOZZLE PARAMETERS (Continued)

VARIABLE	DEFINITION
TAUMNA	Maximum burn distance in region A. Must be input if a submerged nozzle is simulated. (IN)
TAUMNB	Maximum burn distance in region B. Must be input if a submerged nozzle is simulated. (IN)
TAUNB(I)	Independent array of burn distance used with the dependent arrays TA1B(I) and TA2B(I). Maximum number of points=50. (IN)
TBLCM(I)	Array for nozzle efficiency as a function of time. Also, see NCM and TIMECM(I).
TBLPA(I)	Array for ambient pressure as a function of time. Also, see NPA and TIMEPA(I). (PSIA)
TDELDT(I)	Array for change in nozzle throat diameter. Also, see NDT and TIMEDT(I). (IN)
THETEX	Nozzle expansion skirt half-angle measured at the nozzle exit. See Figure 3-23 and "Nozzle Contour" in Section 3.5.4. (DEGREES)
TIMECM(I)	Time array for nozzle efficiency. Also, see NCM and TBLCM(I). (SEC)
TIMEDT(I)	Time array for nozzle throat diameter change. Also, see NDT and TDELDT(I). (SEC)
TIMEPA(I)	Time array for ambient pressure. Also, see NPA and TBLPA(I). (SEC)
TRSUB(I)	Table of nozzle radii input as a function of TXSUB(I) and used to calculate submerged nozzle volume and nozzle contraction ratio. First point in table must correspond to TXSUB(1)= 0.0 and must be the nozzle entrance radius. Last point in table must correspond to TXSUB (NPSUB) and must be the nozzle radius at the point of submergence. Radii are measured from nozzle centerline to nozzle external surface. See Figure 3-24. (IN)

TABLE 3-XVIII VARIABLE DEFINITIONS FOR NOZZLE PARAMETERS (Continued)

VARIABLE	DEFINITION
TXSUB(I)	Table of X coordinates for the submerged nozzle radii table, TRSUB(I). TXSUB(I) is measured from the nozzle entrance plane. TXSUB(1) must be equal to 0.0; TXSUB(NPSUB) must be the X coordinate of the submergence point of the nozzle in the case referenced to the nozzle entrance plane. See Figure 3-24. (IN)

TABLE 3-XIX VARIABLE DEFINITIONS FOR GEOMETRY TABLES PARAMETERS

(If all geometry tables are to be calculated by the internal ballistics module, then the terms marked * are not required)

VARIABLE	DEFINITION
ABHD(I)*	Dependent array of head-end burn area as a function of burn distance. Also, see TAUHD(I) and NGEØHD. (IN**2)
ABN(I)*	Dependent array of aft-end burn area as a function of burn distance. Not needed if a submerged nozzle is simulated. Also, see TAUN(I) and NGEØMN. (IN**2)
ABNA(I)*	Dependent array for burn area of region A of the aft-end as a function of burn distance. Used only when nozzle submergence is simulated. Also, see TAUN(I) and NGEØMN. (IN**2)
ABNB(I)*	Same as ABNA(I) except for region B. (IN**2)
AKGYP(I,N)*	Dependent array of radius of gyration for reference plane N as a function of burn distance. Also, see the independent array TAUPL(I,N) and NGEØ(I). (IN)
ALPPL(I,N)*	Dependent array of port perimeter for reference plane N as a function of burn distance. Also, see the independent array TAUPL(I,N) and NGEØ(I). (IN)
APØRT(I)*	Initial port area for a reference plane. (IN**2)
GEØCØN(I,N)*	Reference plane geometry constants. There are 45 constants per reference plane, see Figures 3-16 and 3-17. These inputs are seldom, if ever, hand calculated for a run. They can be obtained from the punch card output of a previous internal ballistics run.
KPLANE	Number of reference planes. Must always be input.
NGEØ(I)	Number of points in the reference plane geometry arrays. Maximum allowable = 50. See TAUPL(I,N), ALPPL(I,N), and AKGYP(I,N).
NGEØHD*	Number of points in the head-end geometry arrays. Maximum allowable = 50. See ABHD(I), TAUHD(I), PMØIHD(I), RMØIDH(I), and XCGHD(I).

TABLE 3-XIX VARIABLE DEFINITIONS FOR GEOMETRY TABLES PARAMETERS (Continued)

VARIABLE	DEFINITION
NGEØMN*	Number of points in the aft-end geometry arrays. Maximum allowable = 50. See ABN(I), ABNA(I), ABNB(I), TAJN(I), PMØIN(I), PMØINA(I), PMØINB(I), RMØIN(I), RMØINA(I), RMØINB(I), XCGN(I), XCGNA(I), and XCGNB(I).
NPUTAB	Geometry array punch flag. = 0, No geometry arrays or plane constants output = 1, Punch geometry arrays and plane constants = 2, Put geometry arrays and plane constants on disk with NAMELIST data for multiple case use = 3, Punch geometry arrays and plane constants and write on disk
NWRTAB	Geometry array print flag. = 0, Do not print geometry arrays. = 1, Print geometry arrays in table form.
PMØIHD(I)*	Dependent array of head-end roll M.O.I. about longitudinal axis. Also, see TAUHD(I) and NGEØHD. (SLUG-IN**2)
PMØIN(I)*	Dependent array of aft-end roll M.O.I. about longitudinal axis. Not needed if a submerged nozzle is simulated. Also, see TAUN(I) and NGEØMN. (SLUG-IN**2)
PMØINA(I)*	Dependent array of aft-end region A roll M.O.I. about longitudinal axis. Used only when nozzle submergence is simulated. Also, see TAUN(I) and NGEØMN. (SLUG-IN**2)
PMØINB(I)*	Same as PMOINA(I) except for region B. (SLUG-IN**2)
RMØIHD(I)*	Dependent array of head-end pitch M.O.I. about aft tangent plane. Also, see TAUHD(I) and NGEØHD. (SLUG-IN**2)
RMOINA(I)*	Dependent array of aft-end region A pitch M.O.I. about aft tangent plane. Used only when nozzle submergence is simulated. Also, see TAUN(I) and NGEØMN. (SLUG-IN**2)
RMØINB(I)*	Same as RMØINA(I) except for region B. (SLUG-IN**2)
RMØIN(I)*	Dependent array of aft-end pitch M.O.I. about aft tangent plane. Not needed if a submerged nozzle is simulated. Also, see TAUN(I) and NGEØMN. (SLUG-IN**2)

TABLE 3-XIX VARIABLE DEFINITIONS FOR GEOMETRY TABLES PARAMETERS (Continued)

VARIABLE	DEFINITION
TAUHD(I)*	Distance burned; the independent array for the head-end dependent arrays ABHD(I), TAUHD(I), PMØIHD(I), RMØIHD(I), and XCGHD(I). (IN)
TAUN(I)*	Distance burned; the independent array for the aft-end dependent arrays ABN(I), ABNA(I), ABNB(I), PMØIN(I), PMØINA(I), PMØINB(I), RMØIN(I), RMØINA(I), RMØINB(I), XCGN(I), XCGNA(I), and XCGNB(I). (IN)
TAUPL(I,N)*	Distance burned; the independent array for the reference plane dependent arrays ALPPL(I,N) and AKGYP(I,N). (IN)
VCHINP*	Volume of fore-head case. (IN**3)
VCNINP*	Volume of aft-head case. (IN**3)
VCNINA*	Volume of aft-head case, Region A. (IN**3)
VCNINB*	Volume of aft-head case, Region B. (IN**3)
VFHØ*	Initial propellant volume in fore-head. (IN**3)
VFNØ*	Initial propellant volume in aft-head. (IN**3)
VFNØA*	Initial propellant volume in region A of the aft-end. Used only when nozzle submergence is simulated. (IN**3)
VFNØB*	Same as VFNØA except for region B. (IN**3)
XCGHD(I)*	Dependent array of head-end propellant C.G. location measured from the forward tangent plane. Also, see TAUHD(I) and NGEØHD. (IN)
XCGN(I)*	Dependent array of aft-end propellant C.G. location measured from the aft tangent plane (always positive). Not needed if a submerged nozzle is simulated. Also, see TAUN(I) and NGEØMN. (IN)
XCGNA(I)*	Dependent array aft-end region A propellant C.G. location measured from the aft tangent plane (always positive). Used only when nozzle submergence is simulated. Also, see TAUN(I) and NGEØMN. (IN)
XCGNB(I)*	Same as XCGNA(I) except for region B. (IN)

TABLE 3-XX VARIABLE DEFINITIONS FOR PROPELLANT PROPERTIES AND BURNING RATE MODEL PARAMETERS

(** - See Section 3.5.3 for discussion of burning rate inputs)

VARIABLE	DEFINITION
AINCPL	Increment dividing plane location in cylindrical section where anisotropic burning is to be evaluated. (IN)
AKG(I)**	Critical mass velocity (GCR) per unit area equation constants.
AKR(I)**	Burning rate equation constants.
AKRH**	Head-end burn rate coefficient for anisotropic propellant burning simulation. An input value for AKRH will override any table value for anisotropic burn rate coefficient.
AKRN**	Aft-end burn rate coefficient for anisotropic propellant burning simulation. An input value for AKRN will override any table value for anisotropic burn rate coefficient.
AKRTAU(I)**	Array of anisotropic burn rate coefficients. This is the dependent array; see also the independent array of distance burned, TAUAKR(I), and NAKRST.
AKSLØT(I)**	Slot interface burning rate equation constants.
AKU(I)**	Critical gas velocity (UCR) equation constants.
AMWG(I)	Array of propellant gas molecular weight. This is a dependent array; see also the independent array of total pressure, PRESS(I), and NCSTR. (LBM/MOLE)
CSTAR	Propellant gas characteristic exhaust velocity. Not required if the CSTR(I) array is input. (FT/SEC)
CSTR(I)	Array of propellant gas characteristic exhaust velocity. This is a dependent array; see also the independent array of total pressure, PRESS(I), and NCSTR. (FT/SEC)
DELF	Solid propellant density. (LBM/IN^3)
GAMA	Propellant gas specific heat ratio. Not required if the GAMAG(I) array is input.

TABLE 3-XX VARIABLE DEFINITIONS FOR PROPELLANT PROPERTIES AND BURNING RATE MODEL PARAMETERS (CONTINUED)

VARIABLE	DEFINITION
GAMAG(I)	Array of propellant gas specific heat ratios. This is a dependent array; see also the independent array of total pressure, PRESS(I), and NCSTR.
HHR	Reference length of fore-head section. Distance along motor centerline from forward tangent plane to the propellant gas stagnation point. Required only when burn area tables are input for the head-end. (IN)
NAKEND	Indicator which specifies whether or not the burn rate adjustment factor will be used for the end sections. = 0, neither end = 1, head-end only = 2, aft-end only = 3, both ends Also, see TBLAKR(I) and TIMAKR(I).
NAKR	Number of points in the burn rate adjustment versus time arrays. Maximum allowable = 25. Also, see TBLAKR(I) and TIMAKR(I).
NAKRST	Number of points in the arrays of anisotropic burn rate coefficient, AKRTAU(I), versus burn distance, TAUAKR(I). Maximum number of points = 30.
NCSCØE	Indicator to suppress the c* second order curve fit calculation. If NCSCØE is greater than zero, the second order c* calculation (CSTAR = CSCØEF(1) + CSCØEF(2)*PØN + CSCØEF(3)*PØN**2) is bypassed. Thus, the internal ballistics module will use its own input value for c* instead of that determined by the reconstruction module or one of the specific impulse modules.
NCSTR	Number of points in the propellant gas property arrays, PRESS(I), CSTR(I), AMWG(I), GAMA(I), and TCØMB(I). If NCSTR is input, then all five arrays must be input and each must contain the same no. of points. Maximum no. of points = 20.
NPH	Number of points in the arrays of fore-head pressure, PHST(I), versus time TIMEPH(I). Maximum no. of points=70.

TABLE 3-XX VARIABLE DEFINITIONS FOR PROPELLANT PROPERTIES AND BURNING RATE MODEL PARAMETERS (Continued)

VARIABLE	DEFINITION
NTAUTØ	Indicator used to suppress anisotropic tailoff calculations. If not input, a value of 1 is assumed and any anisotropic tailoff simulation which might otherwise be simulated will be suppressed (i.e., an isotropic tailoff will be simulated). If input as 0, an anisotropic tailoff will be unaffected. This enables the userto simulate a start transient by specifying the buildup pressure trace (and thus specifying an anisotropic buildup) without having a corresponding anisotropic tailoff.
PHST(I)	Array of head-end total pressure during the start transient. This is the dependent array; see also the independent array, TIMEPH(I), and NPH. (PSIA)
PRESS(I)	Independent array of total pressure for the dependent propellant gas property arrays, CSTR(I), AMWG(I), TCØMB(I), and GAMAG(I). (PSIA)
R	Propellant gas constant. (FT/°R)
RBFLAG	Program control flag to set the burn rate equation coefficients AKR(2) and AKR(36) equal to the anisotropic burn rate coefficient AKRST at the termination of the start transient interval. A non-zero value will revise the burn rate coefficients.
SLTBRN(I)	Indicator to control total inhibiting of burning on the forward and aft interface of a slot. I indicates the slot number, = 0.0, neither interface inhibited = 1.0, forward interface inhibited only = 2.0, aft interface inhibited only = 3.0, both interfaces inhibited
TAUAKR(I)**	Independent array of burn distance for anisotropic burning simulation. See also AKRTAU(I) and NAKRST. (IN)
TBLAKR(I)**	Dependent array for radial burn rate variation as a function of time. Also, see NAKR, NAKEND, TIMAKR(I), and Section 3.5.3.
TCØMB(I)	Array of head-end total gas temperature. This is a dependent array; see also the independent array of total pressure, PRESS(I), and NCSTR. (°R)

TABLE 3-XX VARIABLE DEFINITIONS FOR PROPELLANT PROPERTIES AND BURNING RATE MODEL PARAMETERS (Continued)

VARIABLE	DEFINITION
TIMAKR(I)**	Independent array of time for radial burn rate variation. Also, see NAKR, TIMAKR(I), and Section 3.5.3. (SEC)
TIMEPH(I)	Array of time during the start transient. This is the independent array; see also the dependent array for buildup pressure, PHST(I), and NPH. (SEC)
TØ	Head-end combustion gas total temperature. Not required if the TCØMB(I) array is input. (°R)

TABLE 3-XXI VARIABLE DEFINITIONS FOR NON-STEADY FLOW, STEADY-STATE, AND PROGRAM TIME CONTROL PARAMETERS

VARIABLE	DEFINITION
AITST	Desired maximum value of total impulse during the start transient. If AITST is input, the start transient interval will terminate when the total delivered impulse, AIT, reaches or exceeds AITVAC. Also see PST and TST and note that only one of these is required to terminate a start transient. (LBF-SEC)
ANITW	Number of increment dividing planes at which web burn through must occur before tailoff begins. Assumed to be 1.0 if not input.
DELTSS	Computation time increment used during steady-state. (SEC)
DELTST	Computation time increment used during the start transient. Not required if STFLAG is not input. (SEC)
DELTTØ	Computation time increment used during tailoff. (SEC)
DELTSP	Special computation time increment. Can be applied at the discretion of the program user between the input time points TIMPT1 and TIMPT2. (SEC)
PST	Desired maximum value of total pressure during the start transient. If PST is input, the start transient interval will terminate when the total head-end pressure, PH, reaches or exceeds PST. Also, see AITST and TST and note that only one of these is required to terminate a start transient. (PSIA)
STDYST	Program control flag to indicate steady-state. Required as input only when a start transient is not simulated (i.e., when STFLAG is not input). Should be input as 1.0 when used.
STFLAG	Start transient calculation control flag. If a start transient is desired, set STFLAG = 1.0.
TIMAX	Maximum program time for internal ballistics simulation. (SEC)

TABLE 3-XXI VARIABLE DEFINITIONS FOR NON-STEADY FLOW, STEADY-STATE, AND PROGRAM TIME CONTROL PARAMETERS (Continued)

VARIABLE	DEFINITION
TIMPT1	If the special calculation time increment, DELTSP, is used, this is the time at which it begins to be used. Also, see TIMPT2 below. (SEC)
TIMPT2	The time at which DELTSP will stop being used. If not input, a value of 0.0 is assumed and DELPSP will not be used. If input greater than 0.0, then DELTSP will be used when TIMPT1 $\leq$ TIME $\leq$ TIMPT2. (SEC)
TST	Desired maximum value of time during the start transient. If TST is input, the start transient interval will terminate when the program time, TIME, reaches or exceeds TST. Also, see AITST and PST and note that only one of these is required to terminate a start transient. (SEC)

TABLE 3-XXII VARIABLE DEFINITIONS FOR MISCELLANEOUS INPUTS

VARIABLE	DEFINITION
ACCELT(I)	Dependent array of vehicle longitudinal acceleration used in simulating acceleration dependent burning rates. Also, see the independent array of time, TIMEAC(I), and NACCEL. (G's)
CKDUMP(I)	Times at which the internal ballistics diagnostic data dumps are started and terminated. Also, see KDUMP(I) and the description of "diagnostic data dumps" in the internal ballistics part of PROGRAM OUTPUT. (SEC)
CRP	Convergence value for non-steady flow discharge pressure at exit of each mass addition region, Assumed to be 0.001 if not input. This is usually quite sufficient.
CRT	Convergence value for non-steady flow discharge gas temperature at exit of each mass addition region. Assumed to be 0.001 if not input, This is usually quite sufficient.
CRW	Convergence value used to compare flow rates at exit of grain to that which can be discharged through the nozzle at the same total pressure. Assumed to be 0.001 if not input. This is generally sufficient but a smaller value will give a closer convergence if the need for accuracy is warranted.
EPCA(I)	Dependent array for case strain at the forward tangent plane. The case strain is used to determine a port area change which results from internal pressure. Also see EPCN(I), TIMEPS(I), and NEPS.
EPCN(I)	Dependent array for case strain at the aft tangent plane. Also, see EPCA(I), TIMEPS(I), and NEPS.
GEØRUN	Indicator used to terminate an Internal Ballistics Module simulation after the reference plane and end section geometry data have been calculated and output. If input as 1.0, only the geometry simulation will be performed. If not input, a value of 0.0 is assumed and a full Internal Ballistics module simulation will be performed.
KDUMP(I)	Indicators used to exercise internal ballistics diagnostic data dumps. Also, see CKDUMP(I) and the description of "diagnostic data dumps" in the internal ballistics module part of PROGRAM OUTPUT.

TABLE 3-XXII VARIABLE DEFINITIONS FOR MISCELLANEOUS INPUTS (Continued)

VARIABLE	DEFINITION
KMØICG	Program indicator used to suppress C.G. and M.O.I. calculations. If KMØICG = 1, calculations are suppressed.
NACCEL	Number of points in the acceleration versus time arrays, ACCELT(I) and TIMEAC(I). Maximum no. of points = 50.
NEPS	Number of points in the case strain versus time arrays, EPCA(I), EPCN(I), and TIMEPS(I). Maximum no. of points = 50.
PCTAB	Percent of total burn area, relative to 1.0, required to force ballistic solution for the anisotropic burn rate coefficient, AKRST, and head-end pressure, PH, at each time interval. Required only when it is desired to input both head-end pressure, PHST(I), and anisotropic burn rate coefficient, AKRTAU(I). Seldom used option.
PHI	Initial estimate for head-end pressure. If STDYST is input as 1.0, then PHI is the estimate of head-end pressure at TIME = 0.0. If STFLAG is input as 1.0, then one-half the value of PHI will be used for the head-end pressure at TIME = 0.0.
PRTFLG	Indicator which controls output of the Internal Ballistics Module data. PRTFLG = 0, Motor ballistic data output only. = 1, Motor ballistic data and increment dividing plane data will be output. = 2, Motor ballistic data and grain C.G. and M.O.I. data will be output. = 3, Motor ballistic data, increment dividing plane data, and grain C.G. and M.O.I. data will be output.
RHØTØL	Maximum amount allowed for a density adjustment in a propellant mass correlation. The absolute value of [(adjusted density-input density)/input density] is not allowed to exceed RHØTØL. This prevents an unreasonable adjustment to density.

TABLE 3-XXII VARIABLE DEFINITIONS FOR MISCELLANEOUS INPUTS (Continued)

VARIABLE	DEFINITION
TIMEAC(I)	Independent array of time used in simulating acceleration dependent burning rates. Also, see ACCELT(I) and NACCEL. (SEC)
TIMEPS(I)	Independent array of time used in simulating the case strain effects on port area. Also, see NEPS, EPCA(I), and EPCN(I). (SEC)
WFACT	Known or measured propellant mass toward which a propellant mass correlation is to be made. If not input, a value of 0.0 is assumed and no correlation will be performed. (LBM)
WFTØL	The minimum difference between WFACT and the calculated propellant mass which is considered significant enough to perform a propellant mass correlation. (LBM)

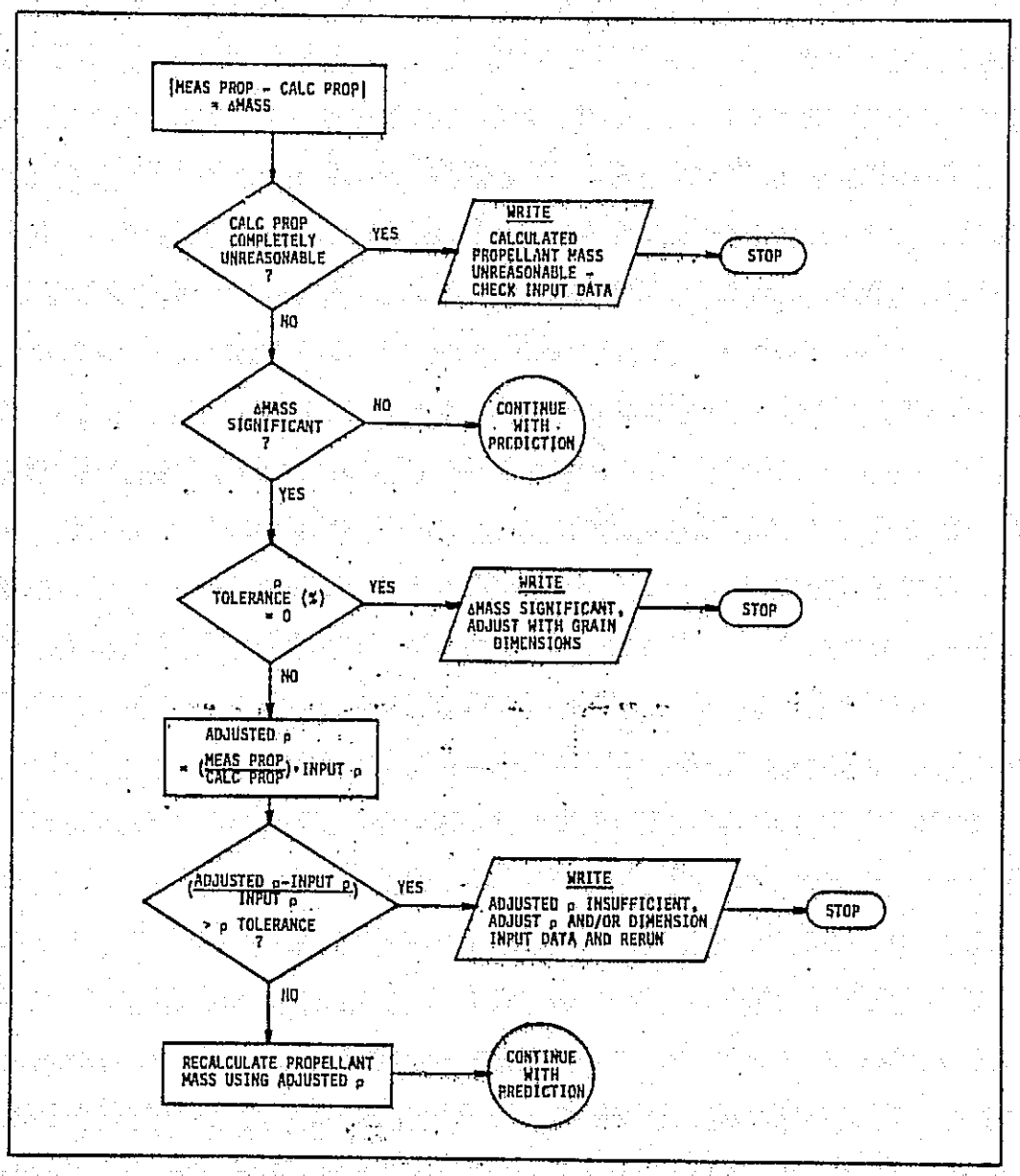

FIGURE 3-7 PROPELLANT MASS CORRELATION LOGIC FLOWCHART

ORIGINAL PAGE IS
OF POOR QUALITY

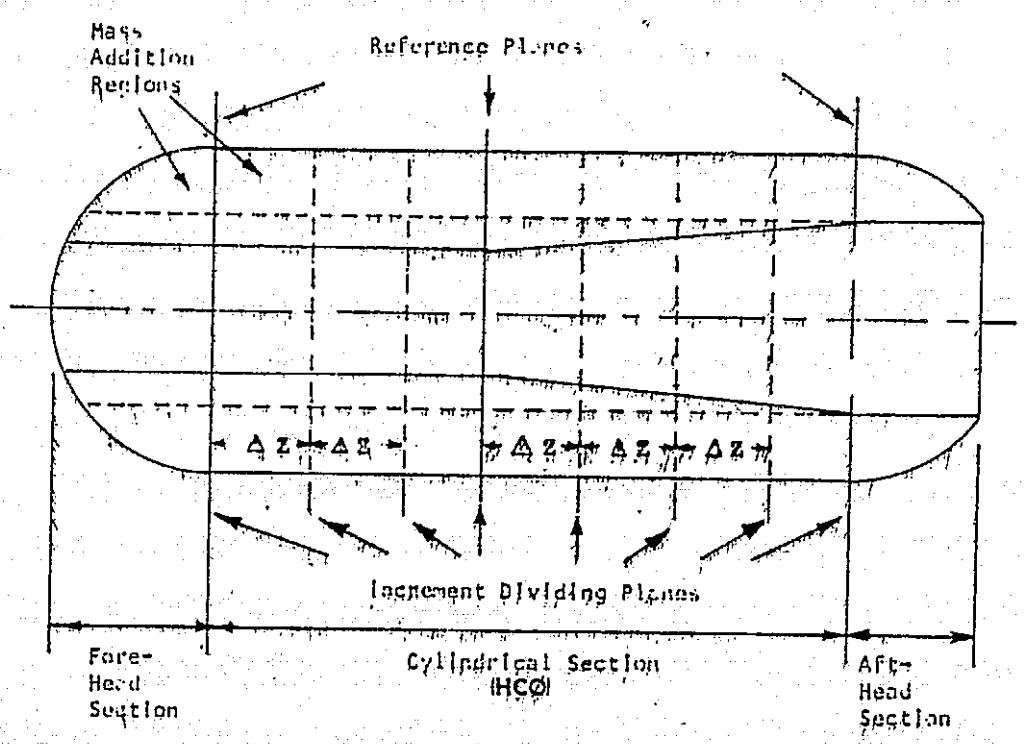

FIGURE 3-8 IBM MODULE MODEL

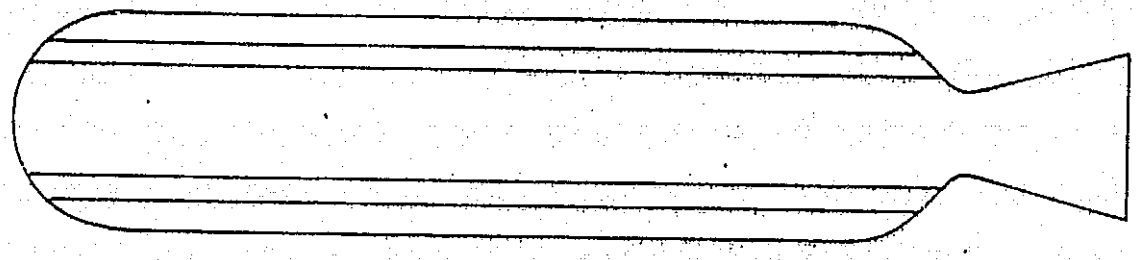

Monolithic Grain With Cylindrical Case

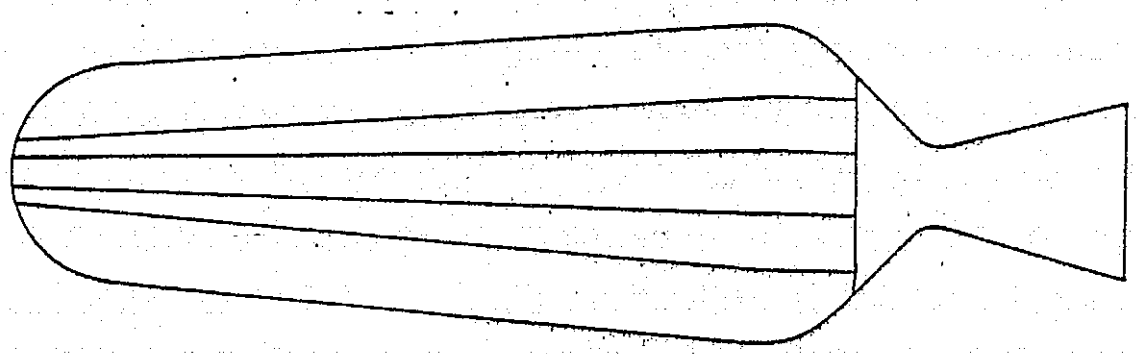

Monolithic Grain with Tapered Case
and Propellant Cutback in Aft-end

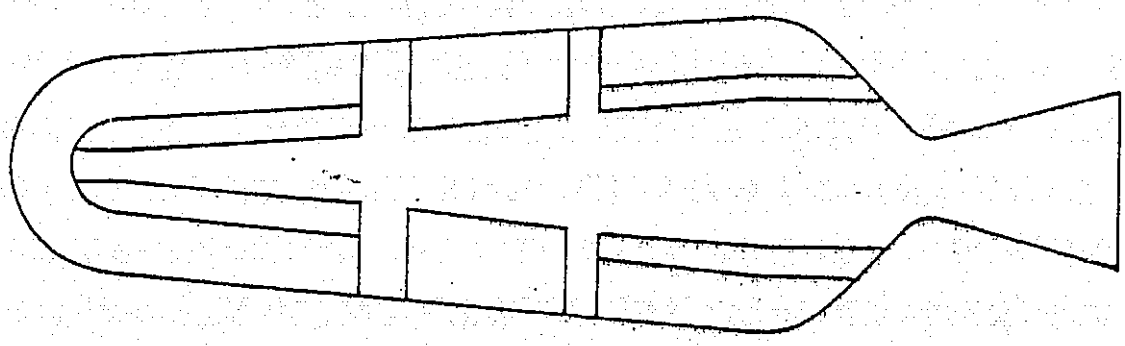

Segmented Grain with a Head-end with Web and Tapered Case

FIGURE 3-9 TYPICAL MOTOR CONFIGURATIONS

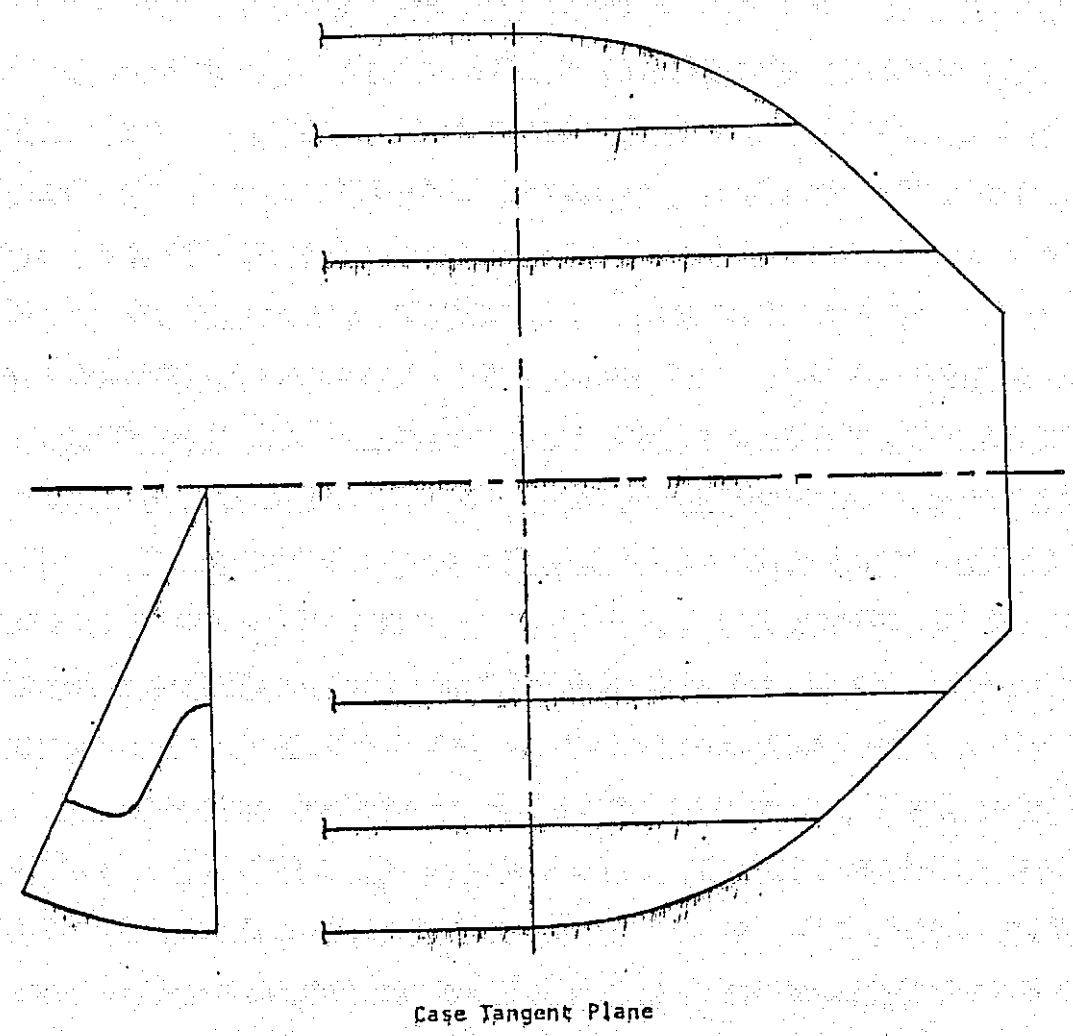

FIGURE 3-10 STRAIGHT THROUGH GRAIN CONFIGURATION

ORIGINAL PAGE IS
OF POOR QUALITY

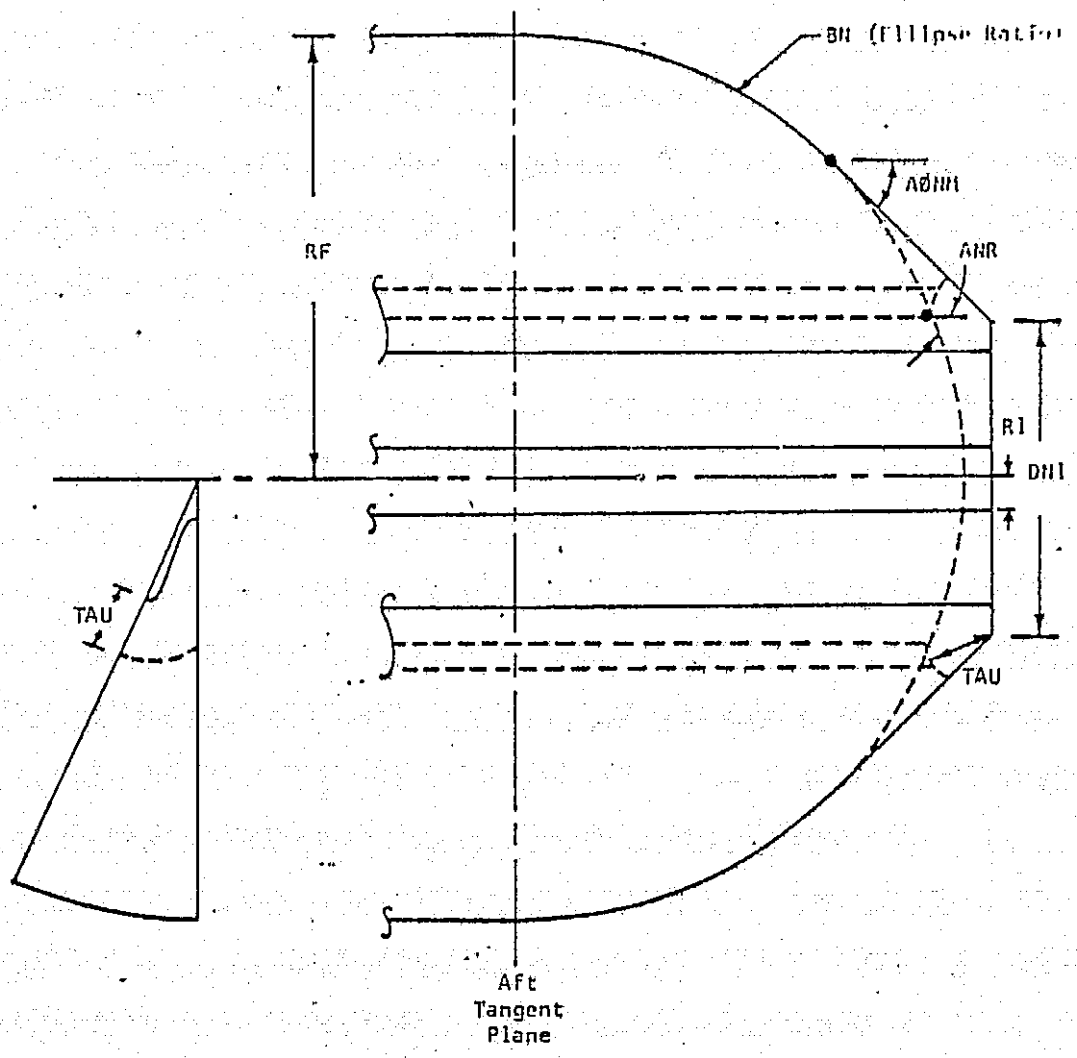

Note: N is replaced by H for Forehead Section Inputs

FIGURE 3-11 STRAIGHT THROUGH GRAIN CONFIGURATION INPUTS

ORIGINAL PAGE IS
OF POOR QUALITY

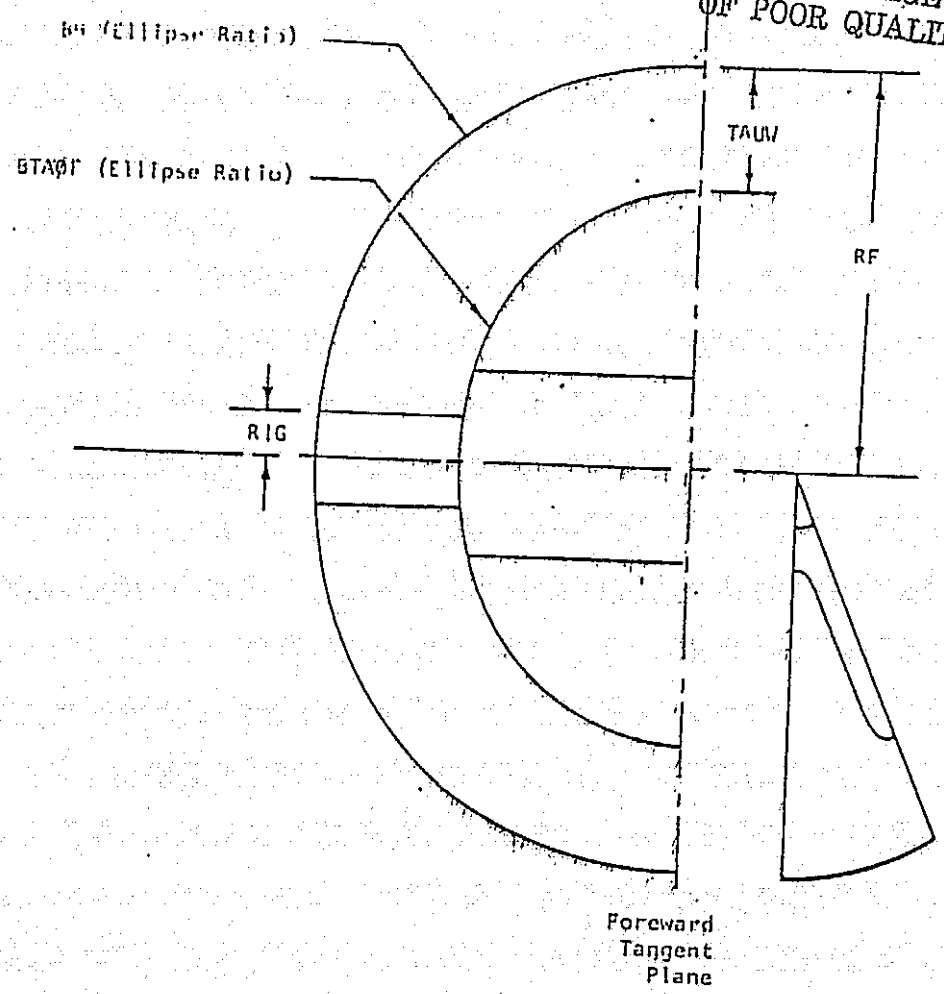

FIGURE 3-12 HEAD-END WEB

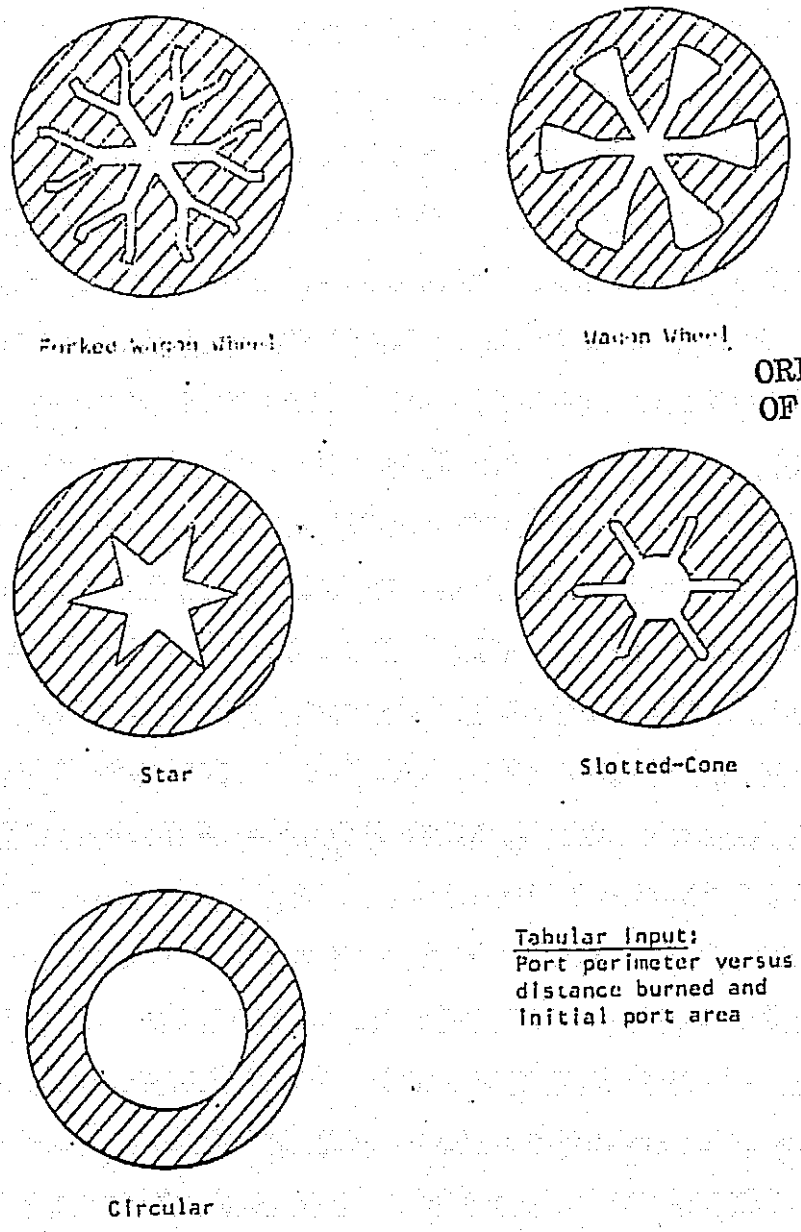

ORIGINAL PAGE IS
OF POOR QUALITY

FIGURE 3-13 GRAIN CONFIGURATION OPTIONS

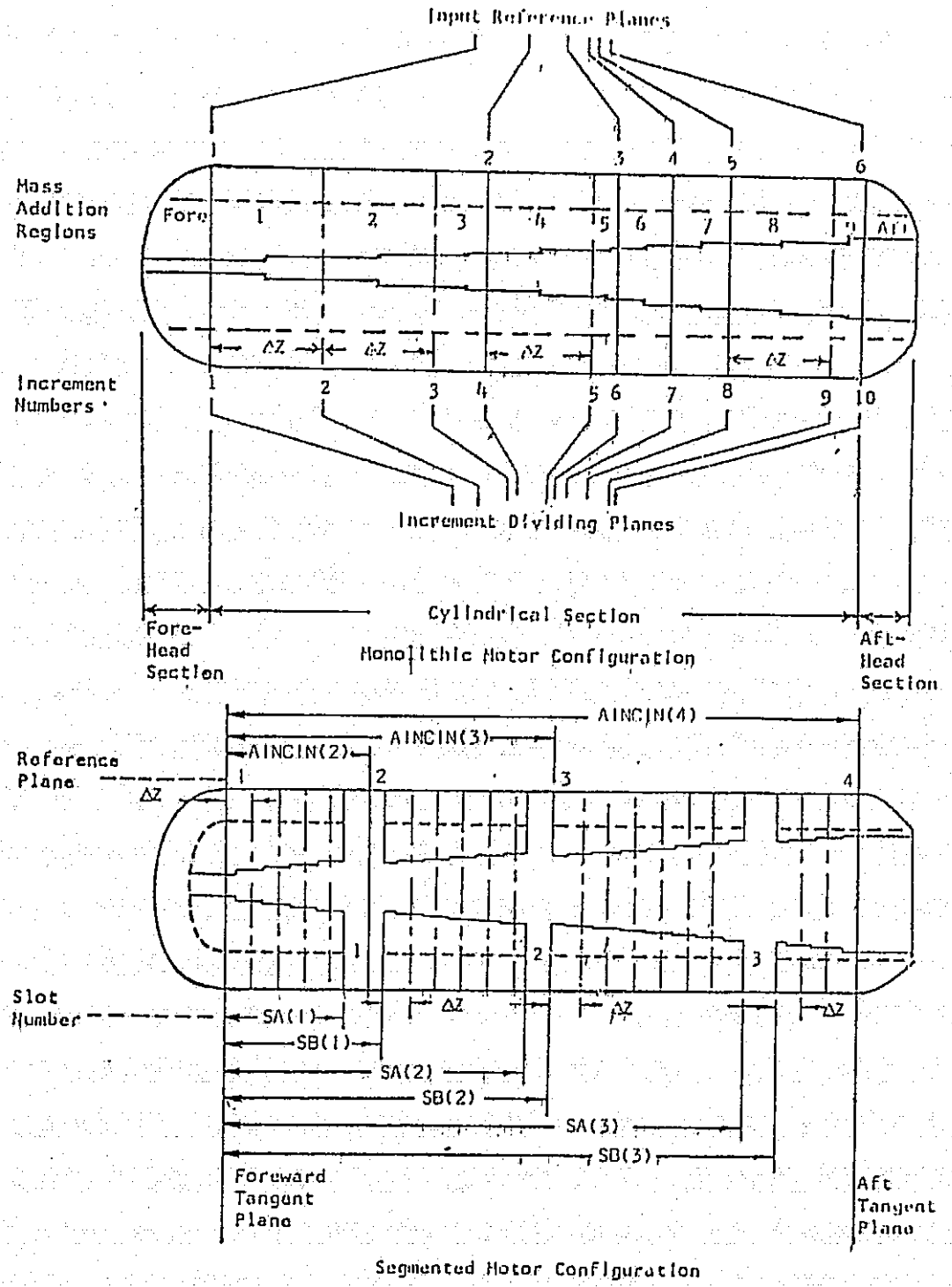

FIGURE 3-14 GEOMETRICAL MODEL FOR REFERENCE PLANE AND INCREMENT DIVIDING PLANE IDENTIFICATION

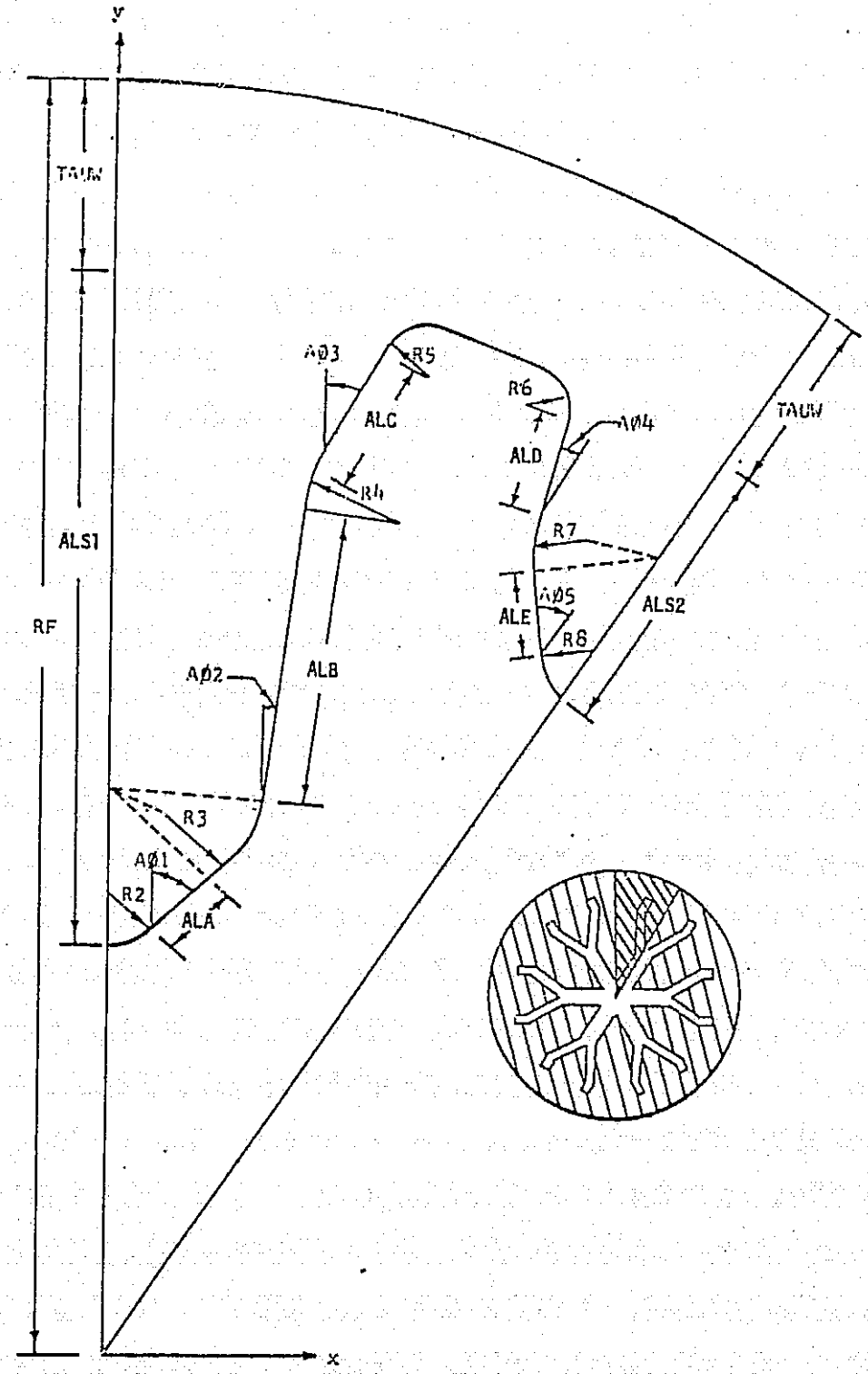

FIGURE 3-15 GENERAL FORKED WAGON WHEEL CONFIGURATION INPUTS

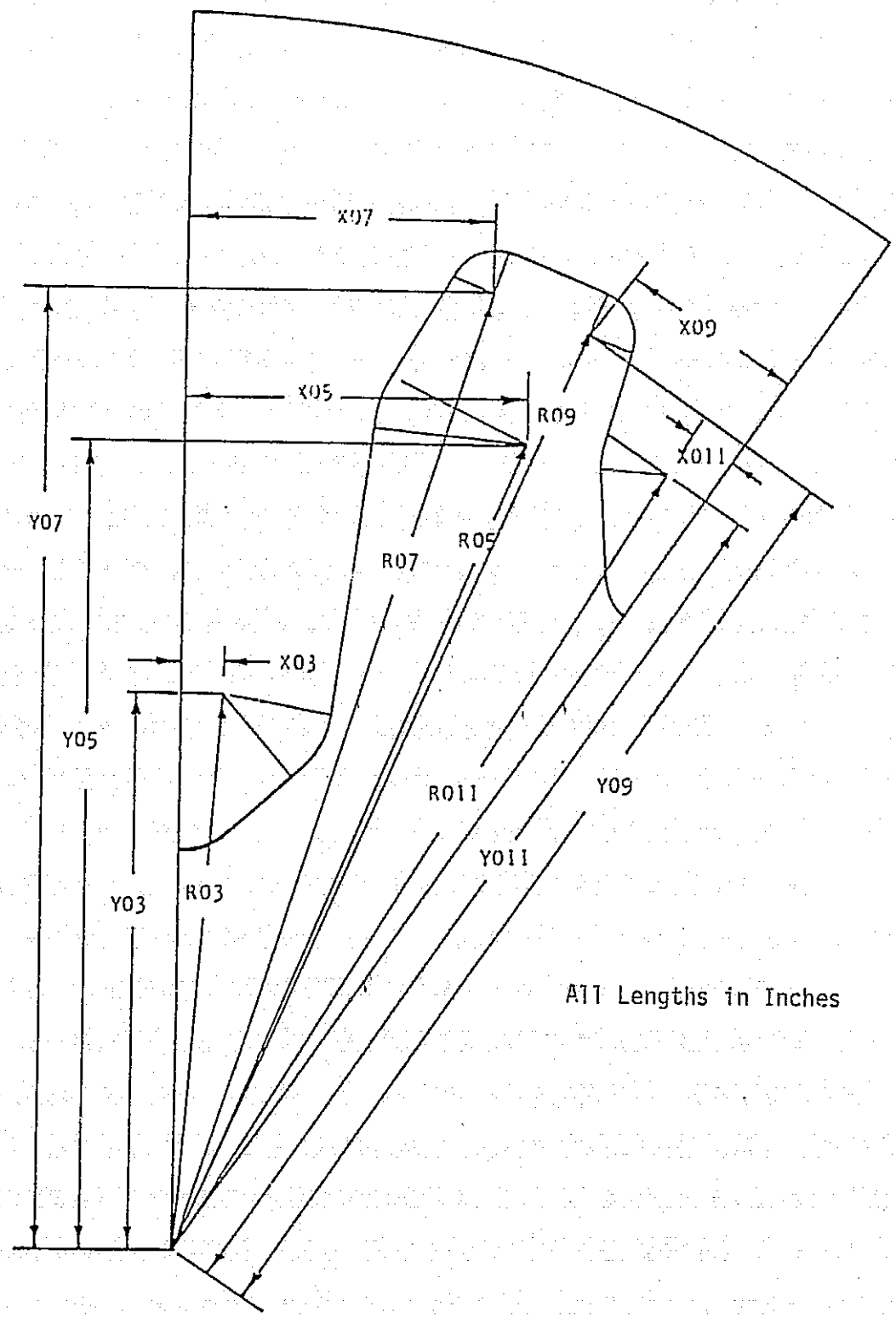

FIGURE 3-16 CALCULATED PLANE CONSTANTS

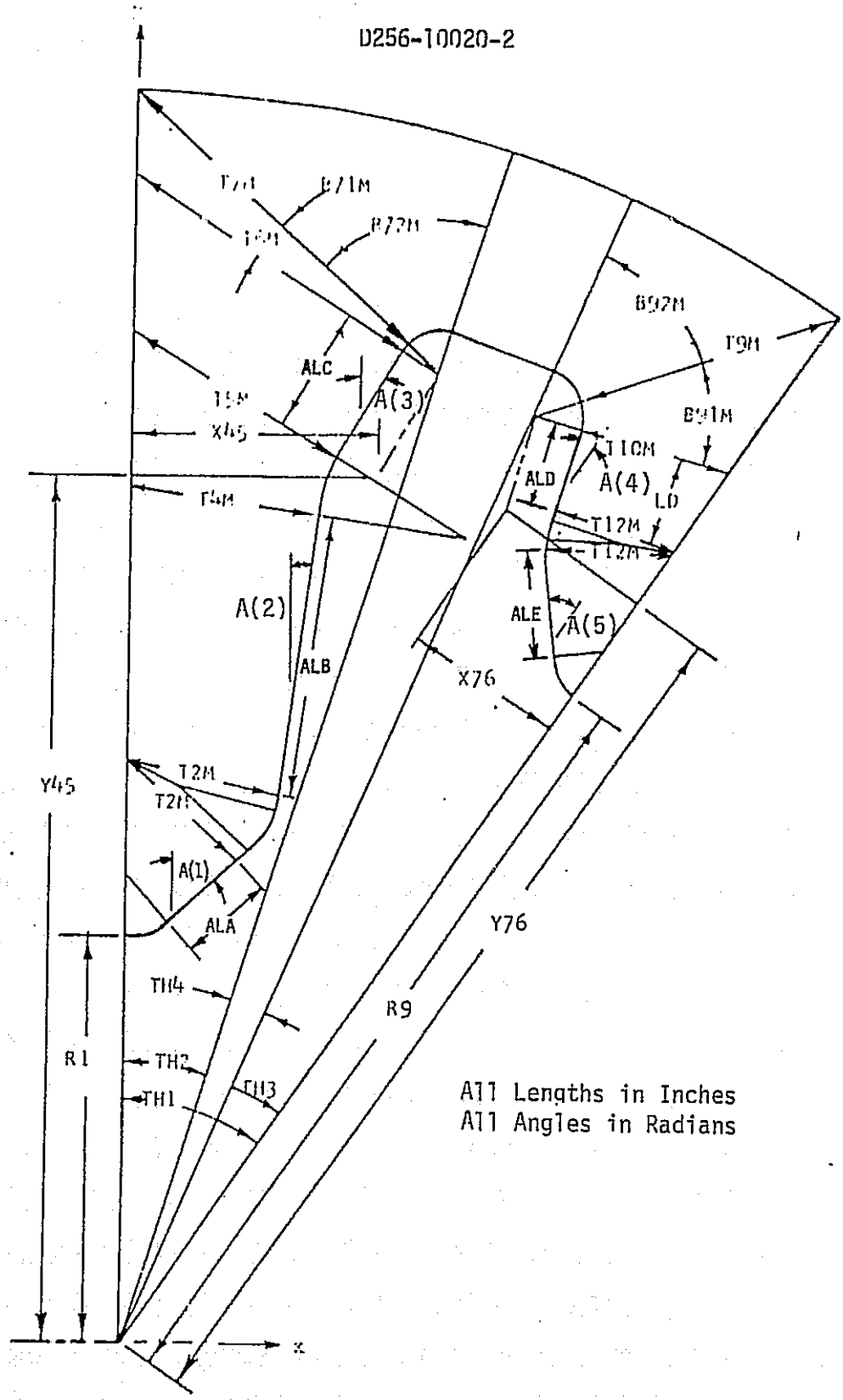

FIGURE 3-17 CALCULATED PLANE CONSTANTS

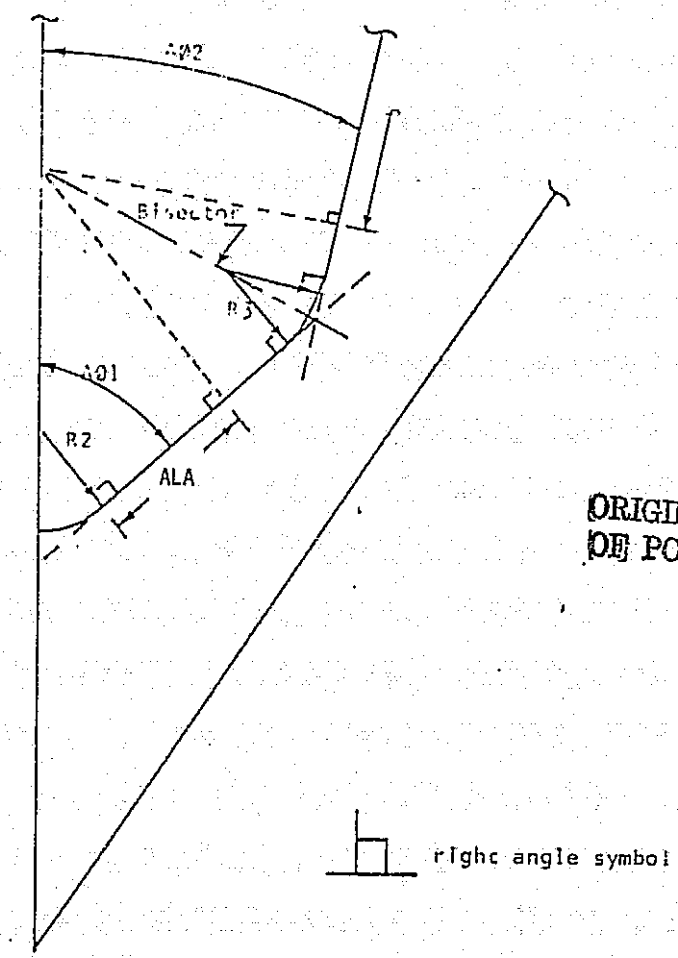

ORIGINAL PAGE IS
OF POOR QUALITY

FIGURE 3-18 ALA DEFINITION

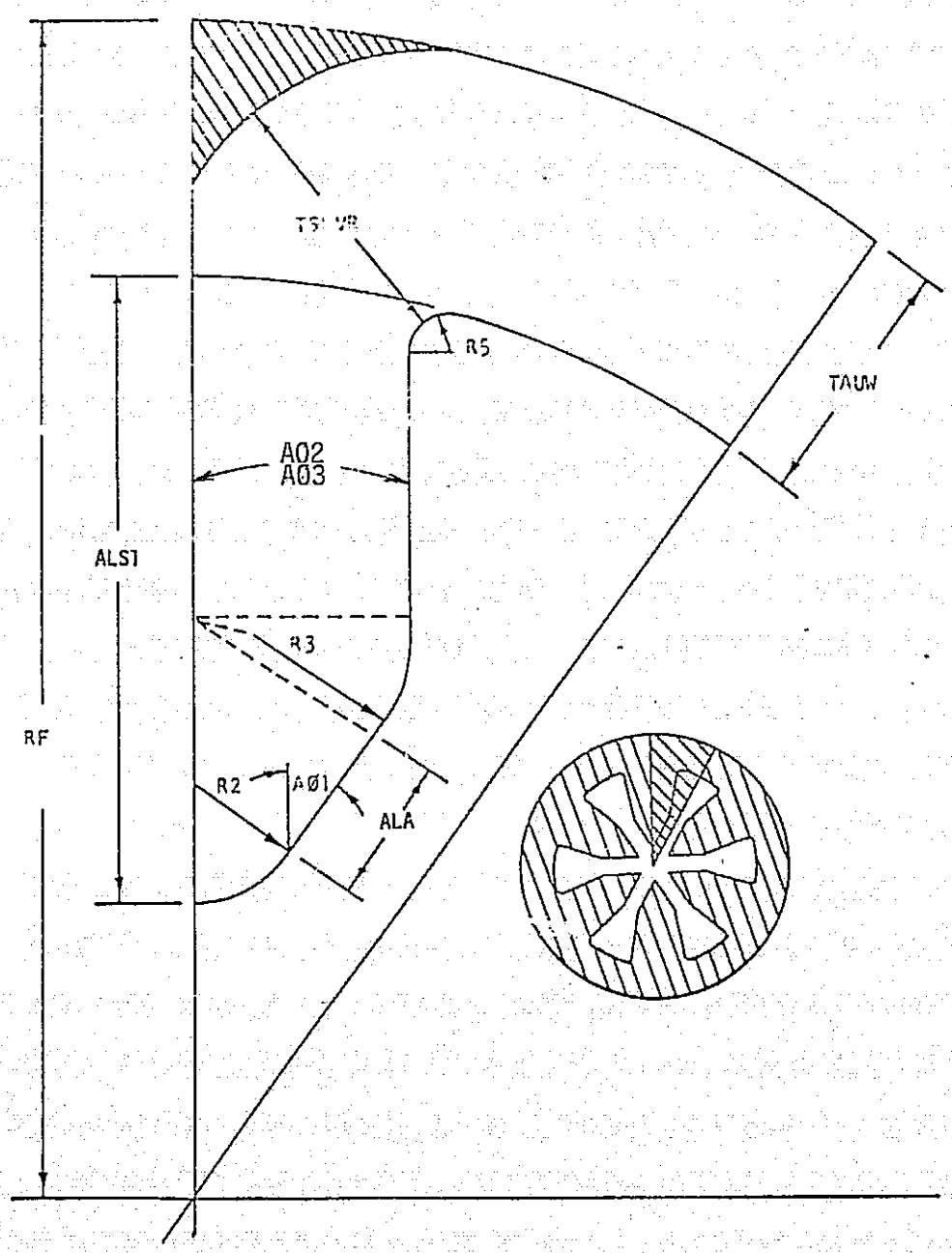

FIGURE 3-19 WAGON WHEEL CONFIGURATION INPUTS

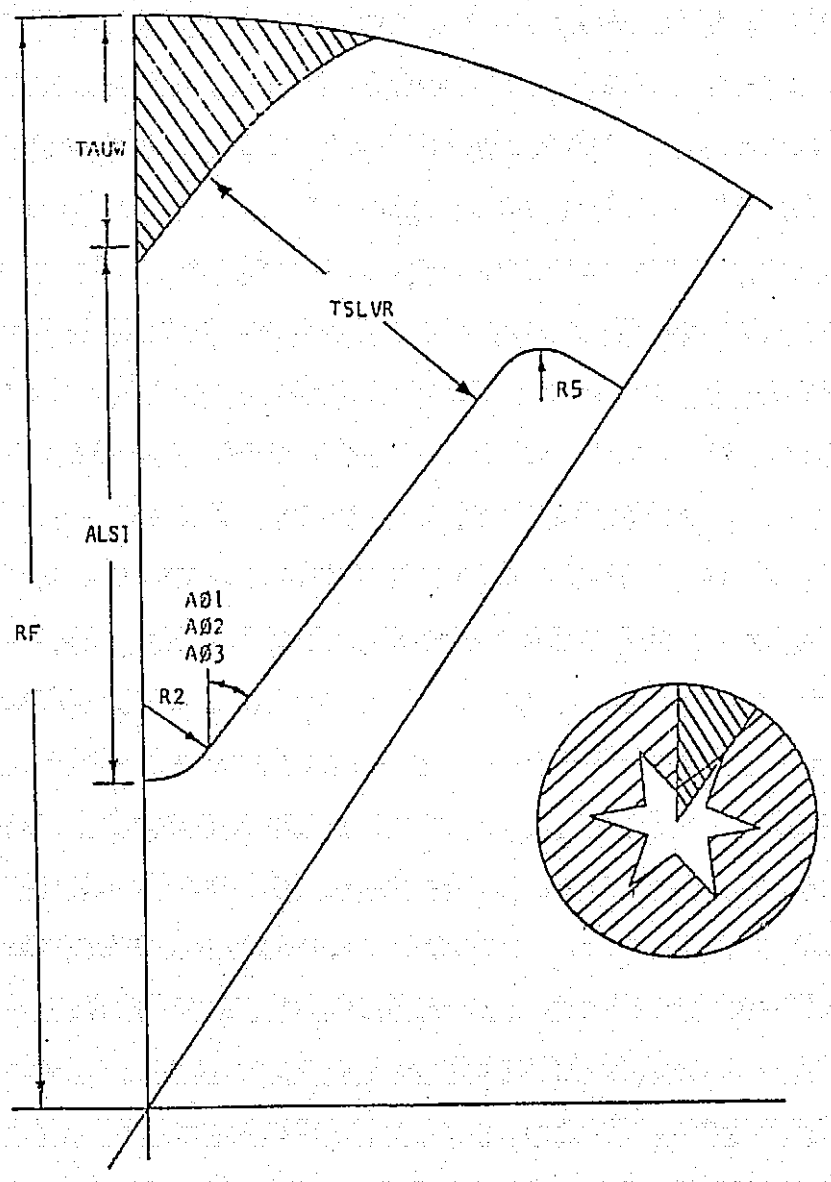

FIGURE 3-20 STAR GRAIN CONFIGURATION INPUTS

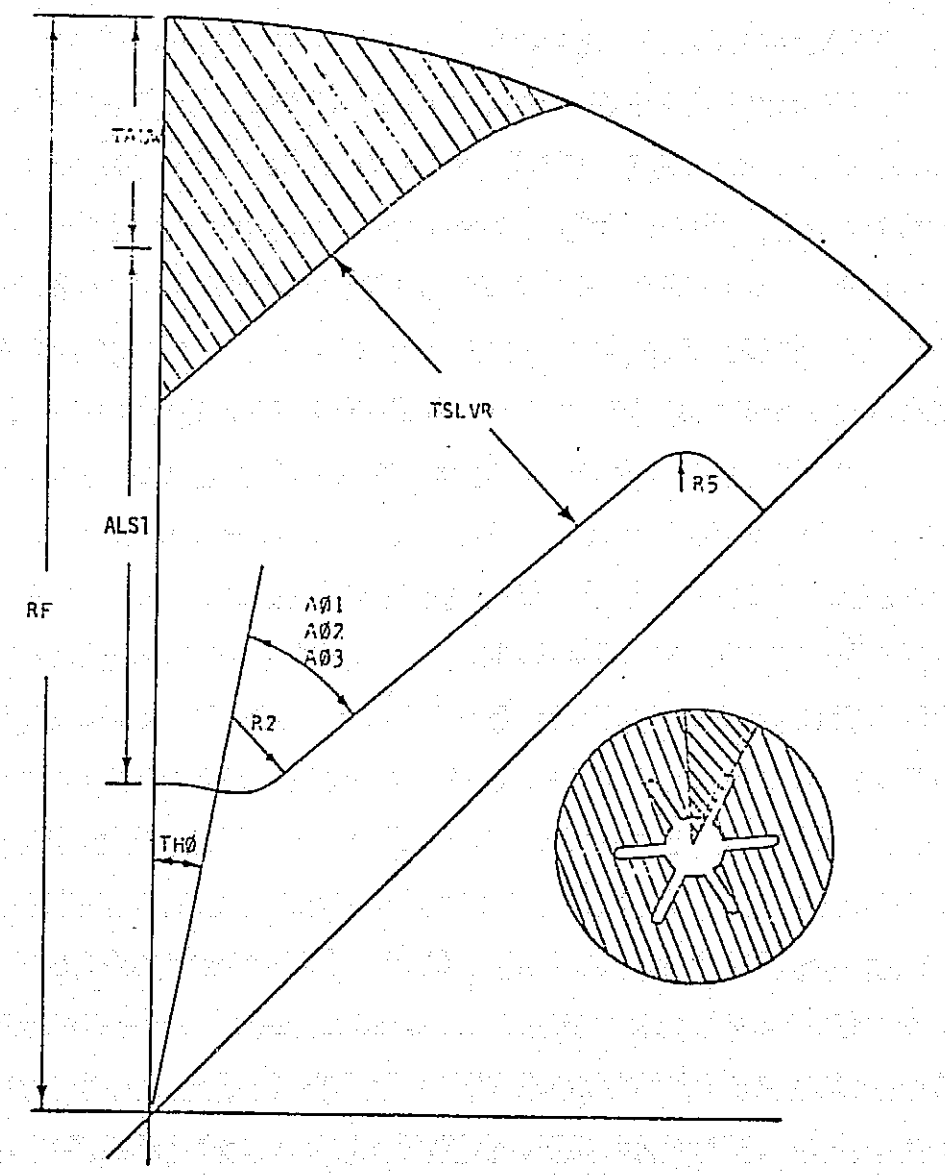

FIGURE 3-21 SLOTTED-CONE GRAIN CONFIGURATION INPUTS

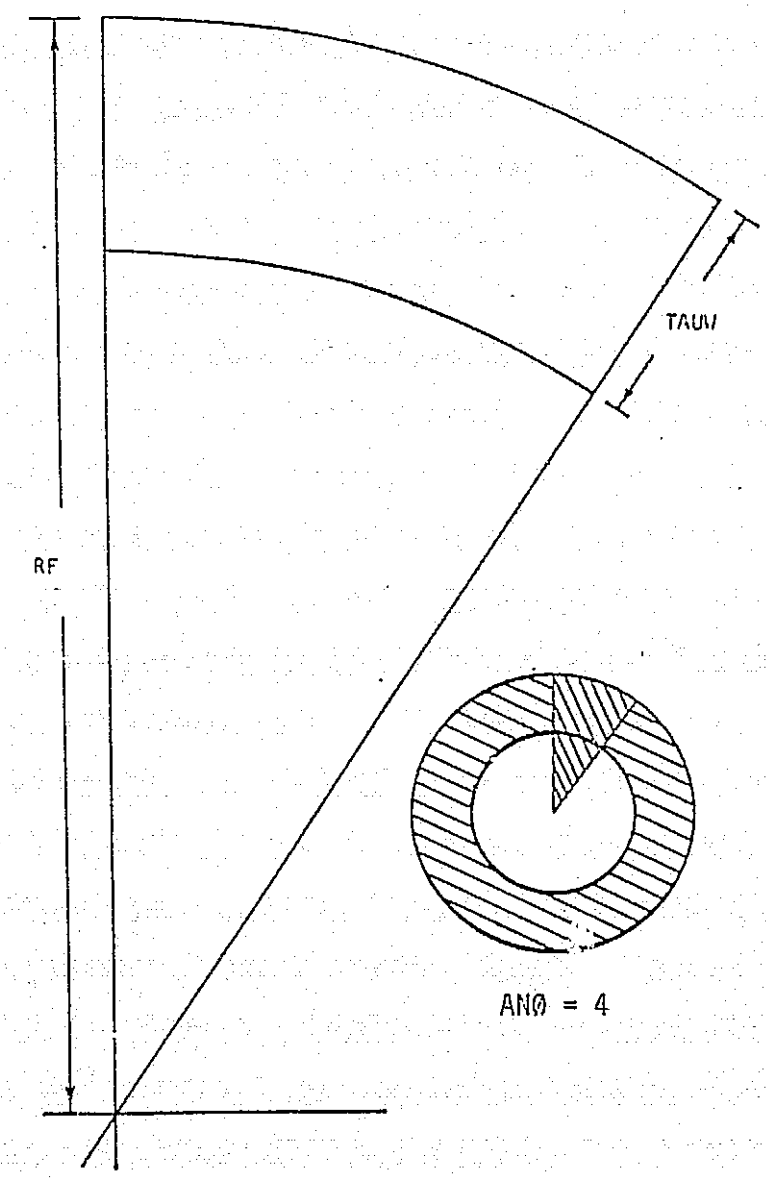

FIGURE 3-22 CIRCULAR PORT CONFIGURATION INPUTS

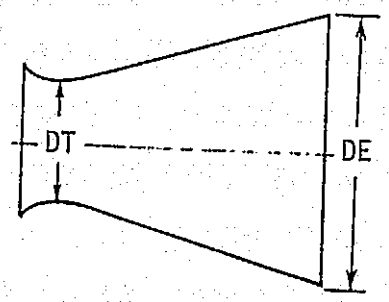

Throat and Exit Diameters

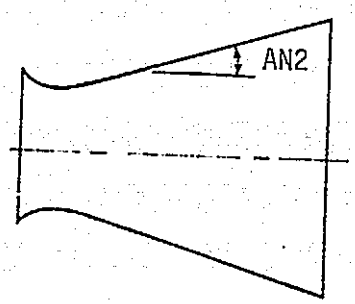

Conical Nozzle Half-Angle

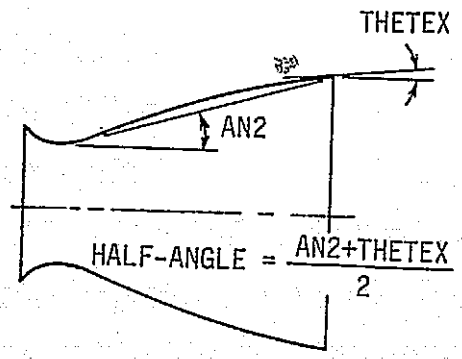

Approximate Bell Nozzle Half-Angle

FIGURE 3-23 NOZZLE CONFIGURATION INPUTS

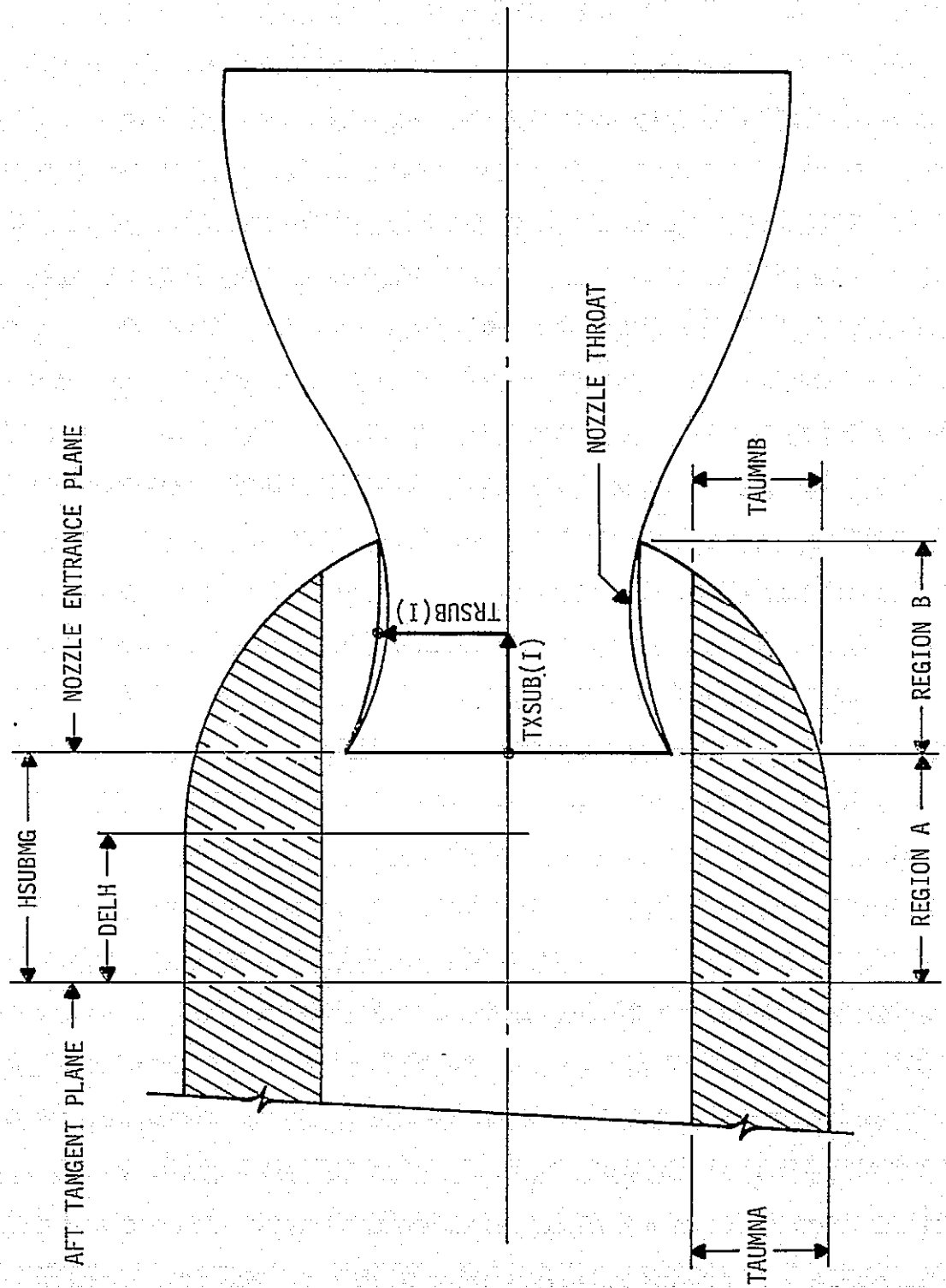

FIGURE 3-24 SUBMERGED NOZZLE INPUT DATA

3.6 SAMPLE INPUT DATA FOR IBM 370 VERSION OF SRB-II

```
CONTROL DATA CARDS
 &INPUT1
 TITLE='SAMP','LE S','RM P','ERFO','RMAN','CE P','REDI','CTIO','N   ',
 NF=1,
 NSI=4,
 NLEWIS=0,
 MITOT=9770.0,
 &END
IDNOZL DATA CARDS
 &ONEDNZ
 IDNPRT=0,
 &END
LEWIS DATA
REACTANTS
C  1.                                          11.158            S 298.15 F
H  1.                                          3.708             S 298.15 F
O  1.                                          39.078            S 298.15 F
N  1.                                          8.783             S 298.15 F
AL 1.                                          15.999            S 298.15 F
CL 1.                                          21.274  -72000.   S 298.15 F

INSERT          AL203(L)
END
IBM DATA CARDS
 &IBDATA
 HCO=1258.9,
 DELZ=30.,
 AINCIN(1)=0.0,115.8,118.8,414.6,417.6,698.1,701.1,996.9,999.9,1258.9,
 SA(1)=115.8,414.6,698.1,996.9,
 SB(1)=118.8,417.6,701.1,999.9,
 RF(1)=10*71.5,
 ANO(1)=2*14.,8*4.,
 TAUW(1)=2*8.70,36.4,33.5,36.4,33.5,36.4,33.5,36.4,32.5,
 ALS1(1)=2*39.8,
 AO1(1)=2*17.0,
 AO2(1)=2*17.0,
 AO3(1)=2*17.0,
 R2(1)=2*0.5,
 R5(1)=2*2.0,
 DTAU(1)=2*1.,8*2.,
 DTAUW(1)=2*.5,8*2.,
 AN2=17.0,
 DE=140.22,
 DT=53.0,
 PONBAR=578.7,
 ERBAR=0.0045,
 EREXP=1.0,
 STFLAG=1.,
 TST=1.,
 DELTST=0.25,
 DELTSS=2.0,
 DELTTO=1.0,
 ANITW=5.,
 TIMAX=135.,
 PA=14.7,
 PHI=29.4,
 AKR(2)=0.066,0.233,
 AKR(36)=0.066,0.233,
 AKSLOT(1)=0.066,0.233,
```

ORIGINAL PAGE IS
OF POOR QUALITY

3.6 (Continued)

```
AKU(1)=5000.,
SLTBRN(1)=2.0,0.0,2.0,0.0,
NAKEND=3,
NAKR=9,
TIMAKR(1)=0.0,7.1,54.,71.6,89.,106.3,113.3,124.6,130.,
TBLAKR(1)=2*.00105,.00132,.0015,.00132,-.00018,-.00195,-.0048,-.0048,
AINCPL=627.6,
NTAUTO=1,
NPH=5,
TIMEPH(1)=0.0,0.25,0.5,0.75,1.0,
PHST(1)=14.7,490.,725.,800.,815.,
DELF=0.064,
R=55.2,
NCSCOE=1,
NCSTR=6,
PRESS(1)=0.,400.,600.,800.,1000.,1800.,
CSTR(1)=5088.8,5125.0,5138.1,5147.9,5154.4,5146.8,
TCOMB(1)=5950.,6125.,6197.,6248.,6282.,6282.,
AMWG(1)=28.,28.27,28.39,28.47,28.54,28.54,
GAMAG(1)=1.1612,1.1615,1.1616,1.1618,1.1619,1.1619,
DLRF=0.01,
DRVRF=0.01,
AK=0.50,
AKK=0.5,
DH1=36.,
DN1=80.,
BH=1.0,
BN=1.0,
AOHM=75.42,
AONM=55.62,
BTAOE=1.0,
RIG=18.,
HHR=35.75,
NCM=13,
TIMECM(1)=0.0,31.,32.,38.0,46.,54.,58.,76.,110.,116.,120.,124.,140.,
TBLCM(1)=2*.965,.964 ,.962 ,.960 ,.959,.960,.961,.960,.958,.954,.949,.947,
PRTFLG=1.,
NWRTAB=1,
KMOICG=1,
VCHINP=764380.,
VFHO=594380.,
KPLANE=10,
NGEOHD=12,
TAUHD(1)=0.,0.5,2.0,4.0,6.0,8.7,9.0,10.0,12.0,14.0,16.253,17.0,
ABHD(1)=55000.,55300.,55400.,54700.,52700.,48200.,44000.,34000.,21000.,
10500.,2*0.0,
&END
CASE END

ALL DATA CARDS FOR THIS CASE HAVE BEEN TRANSFERED TO DISK
```

3.7 UNIVAC 1108 CONTROL CARDS

CARD 1 @RUNØSRB,1HNTSVXXXXXX,COLSONBIN226,2,200
(a = 1HNTSVXXXXXX, b = COLSONBIN, c = 226)

CARD 2 @ASG,TØSRBO1,T,29312

CARD 3 @FREE TPF$.

CARD 4 @ASG,TØTPF$,F/1/PØS/30

CARD 5 @CØPINØSRBO1.,TPF$.

CARD 6 @FREEØSRBO1

CARD 7 @ASG,TØ4,T,23810

CARD 8 @ASG,TØ8,F/100/TRK/150

CARD 9 @ASG,TØ9,F/100/TRK/150

CARD 10 @ASG,TØ10,F/100/TRK/100

CARD 11 @ASG,TØ20,F/100/TRK/100

CARD 12 @ASG,TØ25,F/100/TRK/100

CARD 13 @XQTØABS

DATA CARDS

CARD 14 @PMD,E

CARD 15 @FIN

The following is a brief description of each control card. Note that each card starts in column 1.

CARD 1

This is the job control card which contains the account number a, the engineer or programmer's name submitting the run b, and the BIN number c. The explanation of the other items on this card may be found in the MSFC/Computation Laboratory Programmer Procedures Manual.

CARD 2

This card defines the filename (SRBO1) and tape number (29312) which contain the SRB-II program.

CARD 3

This card sets free the Temporary Program File (TPF) storage area.

3.7 (Continued)

CARD 4

This card sets up space for the TPF storage area.

CARD 5

This card copies into the TPF the SRB-II program. The symbolic, relocatable, and absolute modules are copied.

CARD 6

This card sets free the tape unit from which the SRB-II program was read.

CARD 7

This card defines the filename (4) and tape number (23810) for the Lewis-Thermo data tape. This card is needed only when the NLEWIS > 0 option is used.

CARD 8

This card sets up temporary space on disk to be used by the BATES Module.

CARD 9

Same as Card 8.

CARD 10

This card sets up temporary space on disk for the input data (per case) coming in by cards.

CARD 11

This card sets up temporary space on disk into which the IBM module namelist data is to be copied for later recall.

CARD 12

This card sets up temporary space on disk into which the dispersion data is to be copied for later recall.

CARD 13

This card is used to initiate the loading and execution of the SRB-II program.

3.7 (Continued)

CARD 14

This card will cause a postmortem dump to be generated after the program has been executed in an octal form. If termination occurred normally no postmortem dump is taken.

CARD 15

This card is used to signal that the end-of-run has been reached. It must be physically the last card in the total run deck.

SECTION 4

4.0 PROGRAM OUTPUT

A description and identification of SRB-II output is presented in this section. Some of the output is standard for a given type of simulation, but much of the output capability is optional and at the discretion of the program user. A detailed description of the separate outputs is presented in the paragraphs that follow.

SRB-II can utilize three methods of output:

(1) Computer printout
(2) Magnetic tapes
(3) Punched cards

These types of output are discussed in Sections 4.1, 4.2, and 4.3, respectively. Program error messages are discussed in Section 4.4.

4.1 COMPUTER PRINTOUT

4.1.1 Input Data and Initial Values Printout

The input data and initial values printout are standard forms of output which are exercised for every SRB-II run. The input data printout duplicates on paper the exact card input which makes up the data deck. This printout is done on a case-by-case basis; i.e., the data packages for a given case are printed before the other output for that case. The input data printout for a given case is identified with the following heading:

"CARD IMAGE OF INPUT DATA FOR CASE X"

The initial values printout lists the values for constants, indicators, dispersion limits and inert mass schedule for the case to be executed. Initial values printout format for each case is identified by the following heading:

"THESE ARE THE INITIAL VALUES FOR CASE X"

4.1.2 Module Data Printout

Much of the printout for SRB-II is grouped by program modules. Separate printouts are given for: (1) Bates Specific Impulse Module, (2) Specific Impulse Scaling Module, (3) Contractor Data Specific Impulse Module, (4) Dispersion Module, (5) Thrust Scaling Module, and (6) Internal Ballistics Module. Data from the Inert Mass Module are presented in the Thrust Scaling Module printout or the Internal Ballistics Module printout. The Reconstruction Module has no separate printout. Data from the Dispersion Module are reflected in the Thrust Scaling Module printout or the Internal Ballistics Module printout as well as the initial print generated for dispersions. Data from the Reconstruction Module and the Nozzle Submergence and Contour Effects Module are reflected in the Internal Ballistics Module printout.

4.1.2 (Continued)

In most cases data from a module are transferred to the Output Module for the actual execution of the output procedure. The basic printout from each module gives a definition of each parameter, the appropriate FORTRAN nomenclature, the units, and the computed value for both International System (SI) and English units.

4.1.2.1 BATES Specific Impulse Module Printout

The BATES Isp Module calculates the "end item" vacuum Isp and characteristic exhaust velocity for a given solid propellant at a standard operating pressure using the Air Force devised BATES method. Data from this module are printed through the Output Module with the format shown in Figure 4-1. This is a standard printout and is obtained each time a simulation is made through this module.

4.1.2.2 Specific Impulse Scaling Module Printout

The Isp Scaling Module calculates the "end item" vacuum Isp and characteristic exhaust velocity for a given solid propellant by employing methods for determining theoretical Isp, divergence losses, and motor inefficiencies. Data from this module are printed through the Output Module with the format shown in Figure 4-2. This is a standard printout and is obtained each time a simulation is made through this module.

4.1.2.3 Contractor Data Specific Impulse Module Printout

The Contractor Data Isp Module calculates the "end item" vacuum Isp and characteristic exhaust velocity for a given solid propellant using contractor small motor test data. Data from this module are printed through the Output Module with the format shown in Figure 4-3. This is a standard printout and is obtained each time a simulation is made through this module.

4.1.2.4 Thrust Scaling Module Printout

The Thrust Scaling Module provides motor performance versus time prediction by scaling nominal performance data curves to adjust for variations in burn time and propellant mass for a particular solid rocket motor. Data from this module are printed through the Output Module with the format shown in Figure 4-4. Data are printed for multiple time steps, but only the first three are shown in the figure. This is a standard printout and is obtained each time a simulation is made through this module.

THESE ARE THE VALUES FROM THE BATES SPECIFIC IMPULSE MODULE

PARAMETER	INTERNATIONAL	ENGLISH
BATES TEST ANALYTICAL SPECIFIC IMPULSE, SIBAT(M/S,S)	2571.4392	262.21387
BATES TEST SPECIFIC IMPULSE, SIBT(M/S,S)	2364.7751	241.14000
BATES SPECIFIC IMPULSE DIVERGENCE LOSS, SILDVB(M/S,S)	43.741318	4.4603739
BATES SPECIFIC IMPULSE HEAT LOSS, SILQB(M/S,S)	57.355026	5.8485870
BATES SPECIFIC IMPULSE 2 PHASE FLOWLOSS, SIL2PB(M/S,S)	53.273849	5.4324226
BATES NO LOSS SPECIFIC IMPULSE, SIBNL(M/S,S)	2520.5984	257.02954
STANDARD ANALYTICAL SPECIFIC IMPULSE, SIAS(M/S,S)	2573.0195	262.37500
END ITEM ANALYTICAL SPECIFIC IMPULSE, SIAE(M/S,S)	2685.7649	273.87183
END ITEM SPECIFIC IMPULSE DIVERGENCE LOSS, SILDVE(M/S,S)	62.152634	6.3378057
END ITEM SPECIFIC IMPULSE HEAT LOSS, SILQE(M/S,S)	11.729193	1.1960449
END ITEM SPEC. IMP. 2 PHASE FLOWLOSS, SIL2PE(M/S,S)	38.766586	3.9530926
DELIVERED END ITEM SPECIFIC IMPULSE, SIDE(M/S,S)	2480.6196	252.95284
DIVERGENCE CORRECTION FOR NOZZLE, CLAME	0.0	
CHARACTERISTIC EXAUST VELOCITY, CSTAR(M/S,FT/S)	1479.8347	4855.1016
CSTAR CURVE FIT COEFFICIENT NO. 1	4795.6172	
CSTAR CURVE FIT COEFFICIENT NO. 2	0.95469534E-01	
CSTAR CURVE FIT COEFFICIENT NO. 3	-0.35990190E-04	

FIGURE 4-1 BATES SPECIFIC IMPULSE MODULE SAMPLE PRINTOUT

THESE ARE THE VALUES FROM THE SPECIFIC IMPULSE SCALING MODULE

PARAMETER	INTERNATIONAL	ENGLISH
END ITEM ANALYTICAL SPECIFIC IMPULSE, SIAE(M/S,S)	2685.7649	273.87183
DELIVERED END ITEM SPECIFIC IMPULSE, SIDE(M/S,S)	2552.9417	260.32764
END ITEM FLOWRATE, WD1 (KG/S,LBM/S)	5582.3398	12306.953
END ITEM NOZZLE EFFICIENCY, ETANZ	0.97322553	
DIVERGENCE CORRECTION FOR NOZZLE, CLAME	0.98259217	
THEO. PROPELLANT CSTAR AT PCAVE, CSTARZ(M/S,FT/S)	1567.8909	5144.0000
PREDICTED END ITEM CSTAR, CSTAR(M/S,FT/S)	1441.5955	4729.6445
CSTAR CURVE FIT COEFFICIENT NO. 1	4691.2617	
CSTAR CURVE FIT COEFFICIENT NO. 2	0.95469534E-01	
CSTAR CURVE FIT COEFFICIENT NO. 3	-0.35990190E-04	

FIGURE 4-2 SPECIFIC IMPULSE SCALING MODULE SAMPLE PRINTOUT

THESE ARE THE VALUES FROM THE CONTRACTOR DATA SPECIFIC IMPULSE MODULE

PARAMETER	INTERNATIONAL	ENGLISH
CONTRACTOR ANALYTICAL SPECIFIC IMPULSE, SIACON(M/S,S)	2368.1387	241.48297
END ITEM ANALYTICAL SPECIFIC IMPULSE, SIAE(M/S,S)	2685.7649	273.87183
DELIVERED END ITEM SPECIFIC IMPULSE, SIDE(M/S, S)	2569.2917	261.99487
END ITEM FLOWRATE, WDE (KG/S,LBM/S)	5841.8477	12879.070
TEST MOTOR FLOWRATE, WD2 (KG/S,LBM/S)	4.5359230	10.000000
END ITEM NOZZLE EFFICIENCY, ETANZ	0.95866221	
TEST MOTOR NOZZLE EFFICIENCY, ETANZ1	0.90385562	
DIVERGENCE CORRECTION FOR NOZZLE, CLAME	0.97685850	
DIVERGENCE CORRECTION FOR NOZZLE, CLAM1	0.98296291	
END ITEM CSTAR, CSTAR(M/S,FT/S)	1436.4460	4712.7500
CSTAR CURVE FIT COEFFICIENT NO. 1	4674.3672	
CSTAR CURVE FIT COEFFICIENT NO. 2	0.95469534E-01	
CSTAR CURVE FIT COEFFICIENT NO. 3	-0.35990190E-04	

FIGURE 4-3 CONTRACTOR DATA SPECIFIC IMPULSE MODULE SAMPLE PRINTOUT

THESE ARE THE VALUES FROM THE THRUST SCALING MODULE

SRM IGNITION TIME, TPN(S) 0.10000000E 01

VEHICLE PARAMETERS	INTERNATIONAL	ENGLISH
SRM TOTAL THRUST, FSRM+FI(N,LBF)	0.13233079E 08	0.29749150E 07
SRM INERT THRUST, FI(N,LBF)	0.25493520E 05	0.57311719E 04
SRM TOTAL MASS FLOWRATE, MFSRM+MIF(KG/S, LBM/S)	0.50828086E 04	0.11205680E 05
SRM INERT MASS FLOWRATE, MIF(KG/S,LBM/S)	0.13682188E 02	0.30164063E 02
SRM PROPELLANT SPECIFIC IMPULSE, SIDF (M/S,S)	0.26054944E 04	0.26569652E 03
SRM SPECIFIC IMPULSE OF INERTS, SII(M/S,S)	0.18632632E 04	0.19000000E 03
SRM SPECIFIC IMPULSE, SRMSI(M/S,S)	0.26034954E 04	0.26548257E 03
SRM PROPELLANT MASS REMAINING, MPR (KG, LBM)	0.75785213E 06	0.16707780E 07
SRM INERT MASS REMAINING, MIR(KG,LBM)	0.68269414E 04	0.15050836E 05
SRM CHAMBER PRESSURE, PC (N/M**2, LBF/IN**2)	0.35170534E 09	0.51010571E 03

SRM IGNITION TIME, TPN(S) 0.40000000E 01

VEHICLE PARAMETERS	INTERNATIONAL	ENGLISH
SRM TOTAL THRUST, FSRM+FI(N,LBF)	0.13659682E 08	0.30708190E 07
SRM INERT THRUST, FI(N,LBF)	0.51756270E 05	0.11635273E 05
SRM TOTAL MASS FLOWRATE, MFSRM+MIF(KG/S, LBM/S)	0.52505547E 04	0.11575496E 05
SRM INERT MASS FLOWRATE, MIF(KG/S,LBM/S)	0.27777206E 02	0.61238281E 02
SRM PROPELLANT SPECIFIC IMPULSE, SIDF (M/S,S)	0.26054944E 04	0.26569652E 03
SRM SPECIFIC IMPULSE OF INERTS, SII(M/S,S)	0.18632632E 04	0.19000000E 03
SRM SPECIFIC IMPULSE, SRMSI(M/S,S)	0.26015679E 04	0.26528613E 03
SRM PROPELLANT MASS REMAINING, MPR (KG, LBM)	0.74241406E 06	0.16367430E 07
SRM INERT MASS REMAINING, MIR(KG,LBM)	0.67436094E 04	0.14867121E 05
SRM CHAMBER PRESSURE, PC (N/M**2, LBF/IN**2)	0.36236595E 09	0.52556763E 03

SRM IGNITION TIME, TPN(S) 0.80000000E 01

VEHICLE PARAMETERS	INTERNATIONAL	ENGLISH
SRM TOTAL THRUST, FSRM+FI(N,LBF)	0.14284403E 08	0.32112620E 07
SRM INERT THRUST, FI(N,LBF)	0.53729680E 05	0.12078914E 05
SRM TOTAL MASS FLOWRATE, MFSRM+MIF(KG/S, LBM/S)	0.54906289E 04	0.12104766E 05
SRM INERT MASS FLOWRATE, MIF(KG/S,LBM/S)	0.28836334E 02	0.63573242E 02
SRM PROPELLANT SPECIFIC IMPULSE, SIDF (M/S,S)	0.26054944E 04	0.26568652E 03
SRM SPECIFIC IMPULSE OF INERTS, SII(M/S,S)	0.18632632E 04	0.19000000E 03
SRM SPECIFIC IMPULSE, SRMSI(M/S,S)	0.26015942E 04	0.26528992E 03
SRM PROPELLANT MASS REMAINING, MPR (KG, LBM)	0.72104488E 06	0.15896320E 07
SRM INERT MASS REMAINING, MIR(KG,LBM)	0.66282656E 04	0.14612928E 05
SRM CHAMBER PRESSURE, PC (N/M**2, LBF/IN**2)	0.37894912E 09	0.54961963E 03

FIGURE 4-4 THRUST SCALING MODULE SAMPLE PRINTOUT

ORIGINAL PAGE IS OF POOR QUALITY

4.1.2.5 Dispersion Module Printout

The Dispersion Module is used to perturb the Internal Ballistics Module input data about the nominal values. These perturbed data are used to generate a dispersion prediction from the IBM. Output for a dispersion prediction consists of the value of the indicator NDISP, a dispersion options catalog which lists all available dispersion options, the final value of the dispersed variable, and normal IBM prints (Paragraph 4.1.2.6). The Dispersion Module print is generated in the Output Module with the format shown in Figure 4-5. Formats shown in Figure 4-5 are standard for dispersion predictions and appear in the output of each dispersion case immediately following the initial values print.

4.1.2.6 Internal Ballistics Module Printout

The Internal Ballistics Module performs an in-depth analytical simulation of solid rocket motor performance as a function of time. This module has one standard printout and several optional printouts. Each printout capability is discussed in the following paragraphs.

Motor Performance Data Printout: For predictions in which an internal ballistics simulation is performed, a printout of motor performance data will be made following each computation time step. A sample printout for a large solid rocket motor performance prediction for a motor with no nozzle submergence is presented in Figure 4-6. The standard printout for a motor with nozzle submergence is identical to the one shown in Figure 4-6 with the exception of substitution of data for regions A and B for aft-end parameters. A complete printout of motor performance data for an internal ballistics simulation includes this data for every program computation time step (see Volume III of this document). The computation times are controlled by program inputs. This printout is executed by the Output Module.

Increment Dividing Plane Data Printout: An optional expanded printout controlled by PRTFLG (see Table 3-XXII for definition) is available to print additional data for the end sections and mass addition regions between each increment dividing plane (I.D.P.). A mass addition region is defined as the region between two increment dividing planes (e.g., mass addition region 1 would lie between increment dividing planes 1 and 2). The values printed are the parameters at the downstream plane of the mass addition region except for the generated weight flow, DWDØT, which is within the region.

I.D.P. data are printed with the format shown in Figure 4-7 for motors without nozzle submergence. When the I.D.P. printout option is exercised, the data are written below the motor performance data shown in Figure 4-6 and corresponds to the same program computation time as the preceding motor performance data. This printing is controlled by subroutine IBMØUT of the Internal Ballistics Module. The following list defines the parameters given for each I.D.P.:

```
THESE ARE THE DISPERSION VALUES FOR THIS CASE

NDISP = 15

NDISP= 1 ;  + PROPELLANT DENSITY
NDISP= 2 ;  - PROPELLANT DENSITY
NDISP= 3 ;  + PRESSURE EXPONENT
NDISP= 4 ;  - PRESSURE EXPONENT
NDISP= 5 ;  + PRESSURE COEFFICIENT
NDISP= 6 ;  - PRESSURE COEFFICIENT
NDISP= 7 ;  + CHARACTERISTIC VELOCITY
NDISP= 8 ;  - CHARACTERISTIC VELOCITY
NDISP= 9 ;  + PROPELLANT GRAIN LENGTH
NDISP=10 ;  - PROPELLANT GRAIN LENGTH
NDISP=11 ;  + PROPELLANT GRAIN WEB THICKNESS
NDISP=12 ;  - PROPELLANT GRAIN WEB THICKNESS
NDISP=13 ;  + INITIAL THROAT DIAMETER
NDISP=14 ;  - INITIAL THROAT DIAMETER
NDISP=15 ;  + INITIAL EXIT DIAMETER
NDISP=16 ;  - INITIAL EXIT DIAMETER
NDISP=17 ;  + THROAT EROSION RATE
NDISP=18 ;  - THROAT EROSION RATE
NDISP=19 ;  + PROPELLANT GRAIN TEMPERATURE
NDISP=20 ;  - PROPELLANT GRAIN TEMPERATURE
NDISP=21 ;  + INITIAL INERT MASS CONSUMABLE
NDISP=22 ;  - INITIAL INERT MASS CONSUMABLE

DISPERSED PARAMETER(S) ;

  DE = 0.14060608E 03
```

FIGURE 4-5 DISPERSION MODULE SAMPLE PRINTOUT

IGNITION TIME, TIME (S) 1.0000000

PARAMETER DESCRIPTION (UNITS)	PROGRAM NOMENCLATURE	INTERNATIONAL	ENGLISH
MOTOR PARAMETERS:			
TOTAL DELIVERED THRUST (N,LBF)	FTDEL	11329499.	2546973.0
TOTAL VACUUM THRUST (N,LBF)	FTVAC	12339249.	2773974.0
THRUST CONTRIBUTION OF INERTS (N,LBF)	FI	161003.31	36195.000
DELIVERED TOTAL IMPULSE (N*S,LBF*S)	SRMDTI	8156138.0	1833573.0
VACUUM TOTAL IMPULSE (N*S,LBF*S)	SRMVTI	9039666.0	2032198.0
THRUST COEFFICIENT	CF	1.6422987	1.6422987
GRAIN DISCHARGE MASS FLOWRATE (KG/S,LBM/S)	WDOT	4791.5781	10563.629
FLOWRATE INTEGRAL (KG,LBM)	SWDOTN	3523.4451	7767.8672
INERT MASS FLOWRATE (KG/S,LBM/S)	MIF	86.409332	190.50000
INERT MASS REMAINING (KG,LBM)	MIR	4371.0313	9636.4766
TOTAL BURN AREA (M**2,IN**2)	ABTOT	345.62231	535715.94
TOTAL PROPELLANT VOLUME (M**3,IN**3)	VF	254.92439	15556448.
PROPELLANT MASS REMAINING (KG,LBM)	WF	451601.94	995611.88
TOTAL GAS MASS (KG,LBM)	WGTOT	533.19507	1175.4944
RATIO OF SPECIFIC HEATS	GAMA	1.1618061	1.1618061
MOLECULAR WEIGHT OF GAS (KG/MOLE,LBM/MOLE)	AMW	12.916148	28.475235
CHARACTERISTIC EXHAUST VELOCITY (M/S,FT/S)	CSTAR	1568.5613	5146.1992
MAXIMUM CHAMBER MACH NUMBER	AMPN	0.29865497	0.29865497
HEAD END PARAMETERS:			
TOTAL PRESSURE (N/M**2,LBF/IN**2)	PH	0.56192256E 09	815.00000
PRESSURE INTEGRAL (N*S/M**2,LBF*S/IN**2)	SPHDT	0.41883034E 09	607.46216
BURN AREA (M**2,IN**2)	AHH	35.570129	55133.816
BURN RATE (M/S,IN/S)	RBZ(1)	0.79865083E-02	0.31442958
DISTANCE BURNED (M,IN)	TAUZ(1)	0.56649856E-02	0.22303104
PROPELLANT VOLUME (M**3,IN**3)	VFH	9.5388775	582098.31
GAS VOLUME (M**3,IN**3)	VPH	2.9870596	182281.69
GAS STATIC TEMPERATURE (DEG K,DEG R)	PRNT(1,3)	3472.3760	6250.2773
CYLINDRICAL SECTION PARAMETERS:			
RADIAL BURN AREA (M**2,IN**2)	ABCYL	255.87112	396601.06
SEGMENT FACE BURN AREA (M**2,IN**2)	ABSLOT	44.632126	69179.938
PROPELLANT VOLUME (M**3,IN**3)	VFCYL	238.05310	14526898.
GAS VOLUME (M**3,IN**3)	VP	89.761520	5477587.0
AFT END PARAMETERS:			
TOTAL PRESSURE(NOZ ENT) (N/M**2,LBF/IN**2)	PON	0.52772557E 09	765.40137
PRESSURE INTEGRAL (N*S/M**2,LBF*S/IN**2)	SPONDT	0.38901350E 09	564.21655
BURN AREA (M**2,IN**2)	AAN	9.5491009	14801.137
BURN RATE (M/S,IN/SEC)	RBZ(NI+1)	0.77958256E-02	0.30692238
DISTANCE BURNED (M,IN)	TAUZ(NI+1)	0.55107139E-02	0.21695727
PROPELLANT VOLUME (M**3,IN**3)	VFN	7.3324032	447450.94
GAS VOLUME (M**3,IN**3)	VPN	4.6932735	286401.25
GAS STATIC TEMPERATURE (DEG K,DEG R)	PRNT(NI,3)	3451.3865	6212.4961
PORT AREA (M**2,IN**2)	AP	3.1171980	4831.6680
NOZZLE PARAMETERS:			
THROAT AREA (M**2,IN**2)	AT	1.4237328	2206.7910
EXPANSION RATIO	EPR	6.9975882	6.9975882
PRESSURE RATIO	REPO	0.22163045E-01	0.22163045E-01
MISCELLANEOUS PARAMETERS:			
ANISOTROPIC BURN RATE COEFFICIENT	AKRST	0.65951407E-01	0.65951407E-01
NUMBER OF PRESSURE ITERATIONS	ANLOPS	3.0000000	3.0000000

FIGURE 4-6 INTERNAL BALLISTICS MODULE SAMPLE PRINTOUT OF MOTOR PERFORMANCE DATA

INCREMENT DIVIDING PLANE DATA:

MASS ADDITION REGIONS	PO PSIA	P. PSIA	T DEG. R	U FT/SEC	H	LP INCHES	AP SQ. IN.	WDOT LB/SEC	DWDOT LB/SEC	DW/DT LB/SEC	RB IN/SEC	TAU IN.	RBTO IN/SEC	TAUTO IN.
FORE	815.00	814.75	6250.28	82.34	0.023	1165.69	5578.44	1103.23	1109.48	6.25	0.3144	0.223	0.3132	0.223
30.000	814.78	814.10	6249.82	134.65	0.038	1165.69	5578.35	1802.23	703.71	4.70	0.3144	0.223	0.3144	0.223
60.000	814.35	813.04	6249.15	187.09	0.053	1165.69	5578.26	2501.13	703.62	4.71	0.3143	0.223	0.3143	0.223
90.000	813.71	811.57	6248.25	239.76	0.067	1165.69	5578.17	3199.86	703.45	4.72	0.3143	0.223	0.3143	0.223
115.576	812.98	809.96	6247.31	284.93	0.080	1165.69	5578.11	3795.64	599.49	3.70	0.3141	0.223	0.3141	0.223
118.800	812.61	805.77	6243.18	429.74	0.121	221.94	3919.72	4004.65	472.96	1.78	0.3140	0.223	0.3140	0.223
148.800	811.92	804.84	6242.93	437.09	0.123	223.79	3985.31	4136.69	134.27	2.23	0.3136	0.222	0.3136	0.222
178.800	811.21	803.90	6242.68	444.28	0.125	225.63	4051.42	4269.70	135.28	2.26	0.3135	0.222	0.3135	0.222
208.800	810.49	802.96	6242.43	451.33	0.127	227.48	4118.06	4403.75	136.36	2.30	0.3134	0.222	0.3134	0.222
238.800	809.76	802.00	6242.17	458.23	0.129	229.33	4185.23	4538.84	137.43	2.34	0.3133	0.222	0.3133	0.222
268.800	809.02	801.04	6241.93	465.00	0.131	231.17	4252.93	4674.95	138.50	2.38	0.3133	0.222	0.3133	0.222
298.800	808.28	800.08	6241.68	471.64	0.133	233.02	4321.17	4812.11	139.58	2.42	0.3132	0.222	0.3132	0.222
328.800	807.52	799.10	6241.43	478.14	0.134	234.87	4389.93	4950.29	140.65	2.46	0.3131	0.222	0.3131	0.222
358.800	806.76	798.12	6241.19	484.53	0.136	236.72	4459.21	5089.50	141.72	2.50	0.3130	0.222	0.3130	0.222
388.800	805.99	797.14	6240.94	490.79	0.138	238.56	4529.04	5229.75	142.79	2.54	0.3129	0.222	0.3129	0.222
414.376	805.33	796.30	6240.73	496.06	0.139	240.14	4588.98	5350.41	122.58	1.91	0.3128	0.222	0.3128	0.222
417.823	803.40	788.58	6234.35	637.28	0.179	221.95	3919.99	5820.53	228.40	2.82	0.3127	0.221	0.3127	0.221
447.600	802.18	787.19	6234.14	641.48	0.180	223.88	3988.64	5951.21	132.70	2.02	0.3120	0.221	0.3120	0.221
477.600	800.96	785.79	6233.93	645.60	0.182	225.83	4058.39	6083.56	134.68	2.32	0.3119	0.221	0.3119	0.221
507.600	799.73	784.40	6233.72	649.65	0.183	227.77	4128.73	6216.99	135.79	2.36	0.3118	0.221	0.3118	0.221
537.600	798.50	783.01	6233.51	653.63	0.184	229.72	4199.66	6351.49	136.90	2.40	0.3116	0.221	0.3116	0.221
567.600	797.27	781.62	6233.31	657.54	0.185	231.67	4271.18	6487.05	138.01	2.44	0.3115	0.220	0.3115	0.220
597.600	796.05	780.24	6233.11	661.39	0.186	233.62	4343.29	6623.68	139.12	2.48	0.3114	0.220	0.3114	0.220
627.600	794.83	778.86	6232.91	665.18	0.187	235.57	4415.99	6761.37	140.22	2.53	0.3113	0.220	0.3113	0.220
657.600	793.61	777.49	6232.71	668.91	0.188	237.51	4489.27	6900.13	141.33	2.57	0.3111	0.220	0.3111	0.220
687.600	792.39	776.12	6232.51	672.58	0.189	239.46	4563.16	7039.94	142.43	2.61	0.3110	0.220	0.3110	0.220
697.878	791.97	775.65	6232.44	673.85	0.189	240.13	4588.60	7088.35	49.05	0.63	0.3109	0.220	0.3109	0.220
701.100	790.76	766.57	6223.56	822.64	0.232	221.92	3919.15	7314.94	467.36	1.78	0.3108	0.220	0.3108	0.220
731.100	789.82	765.54	6223.43	824.62	0.232	223.77	3984.72	7445.43	132.81	2.31	0.3100	0.219	0.3100	0.219
761.100	788.88	764.53	6223.31	826.56	0.233	225.62	4050.82	7576.79	133.70	2.35	0.3099	0.219	0.3099	0.219
791.100	787.95	763.52	6223.18	828.47	0.233	227.46	4117.45	7709.16	134.76	2.38	0.3098	0.219	0.3098	0.219
821.100	787.02	762.51	6223.06	830.36	0.234	229.31	4184.61	7842.55	135.82	2.42	0.3097	0.219	0.3097	0.219
851.100	786.11	761.51	6222.93	832.21	0.234	231.16	4252.30	7976.97	136.88	2.45	0.3096	0.219	0.3096	0.219
881.100	785.20	760.52	6222.81	834.05	0.235	233.00	4320.52	8112.41	137.93	2.49	0.3095	0.219	0.3095	0.219
911.100	784.29	759.54	6222.69	835.86	0.235	234.85	4389.27	8248.87	138.99	2.53	0.3094	0.219	0.3094	0.219
941.100	783.39	758.56	6222.57	837.65	0.236	236.70	4458.55	8386.34	140.04	2.56	0.3093	0.219	0.3093	0.219
971.100	782.49	757.59	6222.45	839.42	0.236	238.55	4528.36	8524.84	141.10	2.60	0.3092	0.219	0.3092	0.219
996.679	781.09	756.10	6222.30	841.66	0.237	240.12	4588.30	8643.99	121.14	1.98	0.3091	0.219	0.3091	0.219
1000.120	777.86	738.71	6205.75	1059.83	0.299	221.93	3919.57	9108.56	0.0	2.72	0.3090	0.219	0.3090	0.219
1029.900	776.50	738.21	6206.68	1048.92	0.296	224.75	4019.80	9237.64	131.17	2.08	0.3073	0.217	0.3073	0.217
1059.900	775.18	737.72	6207.57	1038.26	0.293	227.59	4122.02	9368.69	133.44	2.38	0.3073	0.217	0.3073	0.217
1089.900	773.91	737.22	6208.41	1028.01	0.290	230.42	4225.48	9501.35	135.09	2.43	0.3072	0.217	0.3072	0.217
1119.900	772.66	736.72	6209.22	1018.15	0.287	233.26	4330.20	9635.60	136.74	2.49	0.3072	0.217	0.3072	0.217
1149.900	771.45	736.22	6209.98	1008.65	0.284	236.10	4436.16	9771.44	138.39	2.55	0.3071	0.217	0.3071	0.217
1179.900	770.27	735.72	6210.72	999.50	0.282	238.94	4543.38	9908.88	140.04	2.60	0.3071	0.217	0.3071	0.217
1209.900	769.12	735.21	6211.42	990.68	0.279	241.77	4651.84	10047.91	141.70	2.66	0.3070	0.217	0.3070	0.217
1239.900	768.00	734.71	6212.09	982.18	0.277	244.61	4761.54	10188.54	143.34	2.72	0.3070	0.217	0.3070	0.217
1258.900	767.31	734.39	6212.50	976.95	0.275	246.41	4831.67	10278.41	91.64	1.75	0.3069	0.217	0.3069	0.217
AFT	765.40	730.42	6209.95	1009.11	0.284	.....	4831.67	10563.63	290.74	5.52	0.3069	0.217	....	.....

FIGURE 4-7 INTERNAL BALLISTICS MODULE SAMPLE PRINTOUT OF INCREMENT DIVIDING PLANE DATA

4.1.2.6 (Continued)

PØ	Total pressure
P	Static pressure
T	Static temperature
U	Gas velocity
M	Gas mach number
LP	Port perimeter
AP	Port area
WDØT	Discharge mass flow rate
DWDØT	Generated mass flow rate
DW/DT	Mass buildup in region
RB	Isotropic burn rate
TAU	Isotropic burn distance
RBTØ	Anisotropic burn rate
TAUTØ	Anisotropic burn distance

If the motor being simulated contains slots, data for the variables listed above will also be included for each slot in the I.D.P. printout. This data are printed for the slot forward and aft interface locations.

Center of Gravity and Moment of Inertia Data Printout: When the option to calculate propellant center of gravity (C.G.) and moment of inertia (M.O.I.) data is exercised, a printout of the data is given below the motor performance data for each time step. The C.G. and M.O.I. calculations are controlled by KMØICG and the printout is controlled by PRTFLG (See Table 3-XXII for definitions). This output is generated by subroutine IBMØUT of the Internal Ballistics Module. The following variables are printed:

HEADING (FORTRAN NAME)	DESCRIPTION
GRAIN CG (XBARIH)	Motor center of gravity location from aft tangent plane, (M, IN).
GRAIN ROLL MOI (AJPP)	Motor roll moment of inertia about longitudinal axis, (KG-M**2,SLUG-IN**2).

4.1.2.6 (Continued)

HEADING (FORTRAN NAME)	DESCRIPTION
GRAIN XY MOI (AJBB)	Motor pitch moment of inertia about grain center of gravity, (KG-M**2, SLUG-IN**2).
HEAD END CG (XBH)	Head end section center of gravity from forward tangent plane, (M, IN).
HEAD END ROLL MOI (AJPHED)	Head end section roll moment of inertia about longitudinal axis, (KG-M**2, SLUG-IN**2).
HEAD END XY MOI (AJBHED)	Head end section pitch moment of inertia about forward tangent plane, (KG-M**2, SLUG-IN**2).
CYLINDER CG. (CGCYL)	Cylindrical section center of gravity location from aft tangent plane, (M, IN).
CYLINDER ROLL MOI (AIPCYL)	Cylindrical section roll moment of inertia about longitudinal axis, (KG-M**2, SLUG-IN**2).
CYLINDER XY MOI (AIBCYL)	Cylindrical section pitch moment of inertia about aft tangent plane, (KG-M**2, SLUG-IN**2).
AFT END CG (XBN)	Aft end section center of gravity from aft tangent plane, (M, IN).
AFT END ROLL MOI (AJPNOZ)	Aft end section roll moment of inertia about longitudinal axis, (KG-M**2, SLUG-IN**2).
AFT END XY MOI (AJBNOZ)	Aft end section pitch moment of inertia about aft tangent plane. (KG-M**2, SLUG-IN**2).

Geometry Tables Printout: An optional printout is available to write Internal Ballistics Module geometry tables data. Following the calculations of the geometry tables for the reference plane perimeter and radius of gyration versus burn distance, and the end sections burn area, center of gravity and moment of inertia versus burn distance are completed, each table is printed if the input NWRTAB is set to 1. This printout is obtained prior to the printing of the motor performance time-step data.

Diagnostic Data Dumps: Several intermediate, diagnostic print statements have been permanently built into the Internal Ballistics Module to aid in program and data-error analysis. These user-controlled dumps are available through the use of inputs CKDUMP(I) and KDUMP(I). The KDUMP outputs are printed each calculation interval unless they are controlled by the CKDUMP inputs. A description of these inputs follows:

4.1.2.6 (Continued)

INPUT	DEFINITION	SUBROUTINE
CKDUMP(1)	Time at which KDUMP(71) will start printing KDUMP 1, 2, and 3 (SEC).	---
CKDUMP(2)	Time at which KDUMP(71) will stop printing KDUMP 1, 2, and 3 (SEC).	---
CKDUMP(3)	Time at which KDUMP(5) will start printing. (SEC)	---
CKDUMP(4)	Time at which KDUMP(5) will stop printing. (SEC)	---
KDUMP(1)	Writes KDP, III, IIJ, TAUZ(III), RBZ(IIJ), P, SUMDV, VF, ASE, AP, WDØT, DWDØT.	ASESUB, ASTSUB, & HNDSUB
KDUMP(2)	Writes PIN, PD(III), PDPR(III-1), PDPR(III), V(III), VPR(III), APHI, AP, U. UTMP, WDØTI, DWDØT, WDØTD, R, T, DELT, III, PDY, TEMP,ACCEL.	AIBST
	Writes IFLAG, PD(III), PDY, WDØTD, PDX2, PDY2, E1, E2.	AIBST
	Writes ITER, TX1, TY1, TX2, TY2, TE1, TE2.	AIBST
	Writes P, APHI, AP, DELTA, U, R, T, WDØTI, WDØT, DWDØT, III.	AIBSUB
	Writes SLTFLG, IIS, IS1, IS2, AINCX, AINCY, AINCW, SCUR(IIS,1), SCUR (IIS,2), TSLØTF(IIS), TSLØTA(IIS), III, ZCALC(III).	SEGSUB
	Writes PHØLD, WDØT, WDB, DELLP, PMIN, WD, CLØPS, PØN, DIS, DISB, DEED, PMAX, PH, ANLØPS.	SETP4
KDUMP(3)	Writes ICØUNT, PSA(IIS), PDY, WDØTD, PDX2, PDY2, E1, E2.	SLØT
	Writes ITER, TS, T, TX2, TY2, TE1, TE2.	SLØT

4.1.2.6 (Continued)

INPUT	DEFINITION	SUBROUTINE
KDUMP(3)	Writes WSLØTI(IIS), APF(IIS), UF (IIS), PØF(IIS), PSF(IIS), TSF (IIS), PD(IS1), WSLØTD(IIS) APA(IIS), UA(IIS), PØA(IIS), PSA(IIS), TSA(IIS), PD(IS2), DWSLTF(IIS), RBSLTF(IIS), ABSLTF (IIS), DWSLTA(IIS), RBSLTA(IIS), ABSLTA(IIS), DWDTS(IIS).	SLØT
KDUMP(4)	Writes AFP, ASLVR, BV1M, BV1, BV2M, BV2, BV2P, ETA22, ETA2, ANGLE, ETA11, ETA1, BVX, BVXX, THV, THSLVV, RSLVRV, TAU, RF, III.	LPTØ
	Writes (AL(I),I=1,4), AL(7), AL(8), AL7, AL8, DWDØT, DW7, DW8, RB7, RB8, AKRTØ, TAUTØW, AKRTØX, TAUTØX, AKRTØM, AKRTØW N, NN, M, III.	SEGSUB
KDUMP(5)	Writes ANIBØ, ANLØPS, BRNØUT, CKTIME, CLØPS, ICHN, IE, IFLAG, III, IIJ, IIS, IPLANE, IS1, IS2,JUMP, KPLANE, KRASUB, KXRSUB, NBACK, NI, NINCPL, NSLØT, NTME, SLTFLG, TIMCK1, TIMCK2, TØFLAG (This dump will also be written whenever an error situation occurs such that ICHN is set to 5).	MNCHN4
KDUMP(6)	Writes AKRST, DIFAKR, WDØT, DIS, WD, DEED.	CØNV
	Writes PCTAB, DIFAB, WDØT, DIS, WD, DEED.	CØNV
	Writes AP, ALP, AFF, ALPX, ALPY, APX, APY, AINCW, AINCX, AINCY, TEMP, III.	SEGSUB
KDUMP(7)	This flag overrides KDUMP(1), KDUMP(2), and KDUMP(3) settings and prints these dumps according to the simulated burning times specified in CKDUMP(1) and CKDUMP(2).	MNCHN4

Burnout Data Printout: When web burnout occurs in any increment dividing plane, the Internal Ballistics Module automatically prints the following statement:

WEB BURNOUT INCREMENT LOCATION
XXXX.XXX

4.1.2.6 (Continued)

In segmented motors, each time a slot burns laterally through an increment dividing plane, the statement below is automatically printed to identify the location of the dividing plane:

LATERAL BURNOUT INCREMENT LOCATION ZCALC(I) = XXXX.XXX

4.1.3 Miscellaneous Optional SRB-II Printout

LEWIS Subroutine Printout: The LEWIS Subroutine is a modification of the CEC71 program developed by NASA Lewis (Reference 3). LEWIS is used in all three Isp modules and the Reconstruction Module to calculate theoretical rocket performance parameters such as Isp and characteristic velocity. Printed output from LEWIS is optional in SRB-II and is obtained by setting the indicator IRKTO1 = 1 (see Paragraph 3.4.7). A sample printout for the LEWIS Subroutine is shown in Figure 4-8.

IDNØZL Subroutine Printout: The IDNØZL Subroutine is a modified version of the One-Dimensional Two-Phase Flow Loss Computer Program developed by Aerospace Corp. (Reference 4). IDNØZL is used in the BATES Module to calculate the two-phase flow loss for the "end item" rocket motor and/or the BATES test motor. Output from IDNØZL is optional in SRB-II and is obtained by setting the indicator IDNPRT = 1 (see Paragraph 3.4.7). Extended print for the IDNØZL subroutine is obtained by setting the indicator IDBUG = 1.

The first values that appear in the IDNØZL printout are the NAMELIST input data values, propellant constants, tolerance limits, the results of all initial calculations, and the following calculated nozzle parameters are listed:

XT	X coordinate at throat (FT)
X_1	X coordinate of transition point between linear segment and circular segment of the nozzle upstream of the throat (FT)
R_1	nozzle radius at $X = X_1$ (FT)
X_2	X coordinate of transition point between linear segment and circular segment of the nozzle downstream of the throat (FT)
R_2	nozzle radius at $X = X_2$ (FT)
XF	X coordinate at exit (FT)
RF	nozzle radius at exit (FT)

ORIGINAL PAGE IS
OF POOR QUALITY

THEORETICAL ROCKET PERFORMANCE ASSUMING EQUILIBRIUM COMPOSITION DURING EXPANSION

PC = 1000.0 PSIA

	CHEMICAL FORMULA				WT FRACTION (SEE NOTE)	ENERGY CAL/MOL	STATE	TEMP DEG K	DENSITY G/CC
FUEL	N 1.00000	H 4.00000	CL 1.00000	C 4.00000	0.70100	-70690.000	S	298.15	0.0
FUEL	[illegible]	H 10.00000	N [illegible]	O 0.77800	0.13060	-17031.000	S	298.15	0.0
FUEL	[illegible]	H 4.00000	N 0.00000	C 1.12000	0.01960	-24303.000	S	298.15	0.0
FUEL	AL 1.00000				0.14700	0.0	S	298.15	0.0

O/F= 0.0 PERCENT FUEL=100.0000 EQUIVALENCE RATIO= 1.4336 REACTANT DENSITY= 0.0

	CHAMBER	THROAT	EXIT	EXIT
PC/P	1.0000	1.7384	34.679	34.646
P, ATM	68.046	39.163	1.9659	1.9657
T, DEG K	3442	3256	2165	2119
RHO, G/CC	4.7462-3	4.3847-3	1.7347-4	3.0277-4
H, CAL/G	-441.1	-670.7	-1235.8	-1135.8
S, CAL/(G)(K)	2.3646	2.3640	2.3646	2.3646
M, MOL WT	29.341	29.640	29.336	29.166
(DLV/DLT)T	-1.01462	-1.01253	-1.00192	-1.00155
(DLV/DLP)T	1.2021	1.2302	1.0226	1.0
CP, CAL/(G)(K)	0.8287	0.7541	0.4396	1.0
GAMMA (S)	1.1639	1.1664	1.1316	1.0826
SON VEL,M/SEC	1077.6	1041.8	843.9	811.4
MACH NUMBER	1.0	1.000	3.204	3.550
AE/AT		1.0000	4.3100	4.3000
CSTAR, FT/SEC		5187	5147	5162
CF		1.455	1.121	1.516
IVAC,LB-SEC/LB		196.0	336.8	272.6
ISP, LB-SEC/LB		196.2	363.3	362.8

MOLE FRACTIONS

AL	0.00039	0.00004	0.0	0.00000
ALCL	0.00360	0.00263	0.00101	0.00009
ALCL2	0.00243	0.00757	0.00304	0.00011
ALCL3	0.00317	0.00013	0.00001	0.00002
ALH	0.00012	0.00001	0.0	0.0
ALO	0.00011	0.00002	0.0	0.00000
ALOCL	0.00153	0.00097	0.00001	0.00002
ALOH	0.00039	0.00003	0.00000	0.00000
ALO2	0.00003	0.00001	0.0	0.0
ALO2H	0.00042	0.00037	0.00000	0.00000
AL2O	0.00002	0.00001	0.0	0.0
AL2O2(L)	0.0	0.0	0.07874	0.05310
AL2O3(L)	0.07257	0.07495	0.0	0.01650
CO	0.23073	0.23174	0.23034	0.23155
COCL	0.00001	0.00001	0.00000	0.00000
CO2	0.01459	0.01489	0.02225	0.02139
CL	0.01100	0.00919	0.00096	0.00156
CLO	0.00001	0.00000	0.0	0.00000
CL2	0.00002	0.00002	0.00000	0.00000
H	0.03341	0.03562	0.00224	0.00276
HCL	0.13212	0.13337	0.15723	0.15825
HCO	0.00001	0.00000	0.00000	0.00000
HCO2	0.00003	0.00002	0.00000	0.00000
H2	0.25430	0.26082	0.27310	0.27665
H2O	0.14414	0.14555	0.14093	0.14211
N	0.00001	0.00000	0.0	0.0
NH2	0.00001	0.00001	0.00000	0.00000
NH3	0.00001	0.00005	0.00000	0.00000
NO	0.00044	0.00040	0.00000	0.00001
N2	0.04714	0.04775	0.05046	0.05074
O	0.00041	0.00034	0.00000	0.00000
OH	0.10432	0.10568	0.09115	0.09031
H2	0.00012	0.00007	0.00000	0.00000

ADDITIONAL PRODUCTS WHICH WERE CONSIDERED BUT WHOSE MOLE FRACTIONS WERE LESS THAN 0.50000E-05 FOR ALL ASSIGNED CONDITIONS

AL(S)	AL(L)	ALCL(S)	ALCL3(L)	ALN(S)	ALN	ALCOCL	ALCO2	C(S)	C	
CCL	CCL2	CCL4	CCL	CH	CH2	CH2O	CH3	CH4	CN	
CNN	CN2	CCCL2	C2	C2CL2	C2H	C2H2	C2H4	C2H6	C2N	
C2N2	C2O	C3	C3O2	C4	C5	CLCN	CLNO	CLNO	HALO	
HNO3	HO2	HO2	H2O(S)	H2O(L)	H2O2	NCO	NH	NCCL	NO2	
NO2CL	NO3	N2H4	N2O	N2O4	N2O5	O3				

NOTE, WEIGHT FRACTION OF FUEL IN TOTAL FUELS AND OF OXIDANT IN TOTAL OXIDANTS

FIGURE 4-8 LEWIS SUBROUTINE SAMPLE PRINTOUT

4.1.3 (Continued)

The following three parts of tabular data are also printed:

PART 1 OF TABULATED IDNOZL PRINTOUT:

The following quantities associated with the "LAG" case are listed as functions of X:

S	Distance down the nozzle from the end of the chamber (FT)
M	Mach number of the gas
UG	Gas velocity (FT/SEC)
UP	Particle velocity (FT/SEC)
TG	Gas temperature (°R)
TP	Particle temperature (°R)
KD	Drag correction factor
KH	Heat transfer correction factor
REP	Reynolds number of the particles
ETAG	DU_g/dx (FT/SEC/FT)
H	Enthalpy of the particles (FT**2/SEC**2)
FX	Surface tension (DYNES/CM)
P	Pressure at X (PSIA)
A	Area at X (FT**2)
R	Radius at X (FT)

PART 2 of TABULATED IDNØZL PRINTOUT:

The following quantities associated with the "LAG" case are listed as functions of X:

X	Distance down the nozzle from the end of the chamber (FT)
M	Mach number of the gas
A/ATH	area ratio
UP/UG	Ratio of velocities

4.1.3 (Continued)

TG/TP Ratio of temperatures

I(VAC) Vacuum specific impulse, no lag (SEC)

I(ØPT) Optimum specific impulse, no lag (SEC)

RØ/RØSTG Ratio of gas density to stagnation gas, no lag

P/PSTG Ratio of pressure to stagnation pressure, no lag

I/IREF(V) Ratio of "LAG" to "NO LAG" vacuum specific impulses

I/IREF(Ø) Ratio of "LAG" to "NO LAG" optimum specific impulses

All of the aforementioned IDNØZL subroutine printouts will be written when IDNPRT = 1. If IDBUG is also set to 1, then iteration cases of part 1 of the tabulated printout will also be written.

4.2 MAGNETIC TAPE OUTPUT

The SRB-II program has two optional magnetic tape outputs. These are the internal ballistics data tape and the internal ballistics plot tape. These output options record internal ballistic simulation data on a time step basis and are discussed separately below. The actual execution of the output is controlled by the Output Module.

Internal Ballistics Data Tape (I/O Unit 12): This tape will be written when the indicator NTAPE is set to 1 in the Control Data Package and an Internal Ballistics Module simulation is executed. Values for the following variables will be written after each computation time step:

(1) Time from ignition (SEC)

(2) Vacuum thrust (LBF)

(3) Vacuum total impulse (LBF-SEC)

(4) Vacuum specific impulse (SEC)

(5) Characteristic exhaust velocity (SEC)

(6) Thrust coefficient

(7) Head-end total pressure (PSIA)

(8) Nozzle entrance total pressure (PSIA)

(9) Head-end static temperature (°R)

4.2 (Continued)

(10) Nozzle throat area (IN**2)

(11) Maximum combustion chamber mach number

(12) Grain discharge mass flowrate (LBM/SEC)

(13) Propellant mass consumed (LBM)

(14) Propellant mass remaining (LBM)

(15) Inert mass remaining (LBM)

(16) Nozzle exit area (IN**2)

(17) Nozzle expansion ratio

(18) Propellant grain center of gravity referenced to the aft tangent plane (IN)

(19) Pitch/yaw moment of inertia (SLUG-IN**2)

(20) Roll moment of inertia (SLUG-IN**2)

Internal Ballistics Plot Tape (I/O Unit 13): This tape will be written when the indicator NPLØT is set to 1 in the Control Data Package and an Internal Ballistics Module simulation is executed. The generated tape represents an intermediate step in obtaining hard copy plots. The tape can be reformatted for use by existing Benson and Lerner or MSFC SC 4020 Plot Programs.

The variables written on the plot tape are the same as those listed above for the performance data tape and are written in the same order.

4.3 PUNCHED CARD OUTPUT

SRB-II has two optional punched card output capabilities. These are the booster/mass property data cards and the Internal Ballistics Module geometry table cards.

Booster Mass Property Cards: Booster mass property cards are punched when the indicator NCARD is set to 1 in the Control Data Package and an Internal Ballistics Module simulation is being executed. Cards are punched for each computation time step and contain data for (1) time from ignition (SEC), (2) mass of propellant remaining (LBM), (3) mass of inerts remaining (LBM), (4) propellant center of gravity referenced to the aft tangent plane (IN), (5) propellant moment of inertia in pitch or yaw (SLUG-IN**2), and (6) propellant moment of inertia in roll (SLUG-IN**2). The execution of this output is controlled by the Output Module.

4.3 (Continued)

Internal Ballistics Module Geometry Array Cards: After the Internal Ballistics Module has calculated the end section and reference plane geometry arrays and plane constants, these data may be punched on cards for use as input in subsequent program runs. If these data are available as input in the Internal Ballistics Data Package, then the program calculations for the data are bypassed and program execution time is reduced. NPUTAB is the program indicator which controls output for these cards (See Table 3-XIX for definition). When this option is exercised, the following data can be punched in NAMELIST format. Definitions for these terms can be found in Table 3-XIX.

REFERENCE PLANE DATA

NGEØ(I)
GEØCØN(I)
APØRT(I)
TAUPL(I)
ALPPL(I)
AKGYP(I)*

FORE-HEAD AND AFT-HEAD DATA

NGEØHD	NGEØMN	XCGNA(I)**
TAUHD(I)	TAUN(I)	XCGNB(I)**
ABHD(I)	ABN(I)	PMØINA(I)**
PMØIHD(I)*	PMØIN(I)*	PMØINB(I)**
RMØIHD(I)*	RMØIN(I)*	RMØINA(I)**
XCGHD(I)*	XCGN(I)*	RMØINB(I)**

* - These arrays will not be punched if propellant center of gravity and moment of inertia calculations are not being made (KMØICG = 1).

** - These arrays will be punched only when a submerged nozzle is simulated (NSUBMG=1).

4.4 ERROR MESSAGES

The majority of the error messages in SRB-II are self-explanatory. The following list of error messages require clarification. Messages are referenced to the subroutine which generated that message.

4.4 (Continued)

SUBROUTINE EQLBRM ERROR MESSAGES

1. "DERIVATIVE MATRIX SINGULAR" - This situation occurs very rarely inasmuch as, if singularities in the matrix solutions occur, they generally occur first in the iteration matrices and the program does not get as far as the derivative matrices. However, it is possible for the iteration matrix to just barely avoid being singular and for the derivative matrix to be singular. When this occurs the above message is printed, DLVPT is det equal to -1, DLVTP is set equal to 1, and the program continues.

2. "LOW TEMPERATURE IMPLIES SPECIES SHOULD HAVE BEEN INCLUDED ON AN INSERT CARD, RESTART" - this message can occur only for an HP or UV problem. It occurs only when the omission of an important condensed product of reaction causes the program to seek a combustion temperature that is unrealistically low (T < 100K). When this occurs the program skips to the next case.

3. "PHASES OF A CONDENSED SPECIES ARE OUT OF ORDER" - This statement is written when the thermodynamic data for three or more condensed phases of a species are not in a permitted order as discussed in Appendix A. After the statement is written, a table of output for all completed points is written and program goes to next case.

4. "SINGULAR MATRIX" - Singularities rarely occur in the course of obtaining a matrix solution in GAUSS. When they do occur the program restarts with new estimates. However, if the singularity occurs again even with new estimates, the above error message is printed and control is returned to the main program which starts the next case. One possible way to get through this difficulty is to assign a slightly modified equivalence ratio or o/f.

5. "THE TEMPERATURE = (Degrees K) IS OUT OF RANGE FOR POINT (Number)" - This message is printed whenever the converged temperature for the indicated point is outside the temperature range read in on the card following the THERMO control card. This temperature range, which at present is 300 to 5000 K, is the one over which the gas phase thermodynamic data have been fitted. Generally the thermodynamic data can be extrapolated a short distance without much loss in accuracy. However, to prevent large errors due to extrapolation if TLOW/1.5 > T > 1.25 THIGH, then after the message has been printed, the program writes the output for all completed points and then skips to the next case.

4.4 (Continued)

6. "35 ITERATIONS DID NOT SATISFY CONVERGENCE REQUIREMENTS FOR THE POINT (Number)" - Compositions are typically obtained in 3 to 12 iterations. The number 35 was arbitrarily selected to indicate that if convergence has not been reached by that number the problem probably will not converge at all. This situation occurs rarely. All completed points up to this point are printed and program goes to the next case. If the cause of nonconvergence is not obvious from the output, it is recommended that the problem be rerun with intermediate output.

SUBROUTINE RØCKET ERROR MESSAGES

1. "DID NOT CONVERGE FOR AREA RATIO = (Value of area ratio)" - The program permits a maximum of 10 iterations to converge to the pressure ratio corresponding to the assigned area ratio. The usual number of iterations required is 1 to 5. Present experience indicates that the only time the number of iterations will exceed is for an assigned area ratio very close to 1 such as $1. < A_e/A_t < 1.0001$. This is due to the fact that the converged throat conditions do not correspond exactly to an area ratio of 1.

SUBROUTINE SEARCH ERROR MESSAGES

1. "INSUFFICIENT STORAGE FOR FOLLOWING (Number of) SPECIES" - This statement shows that for the chemical system under consideration, the program found more possible species in THERMO data than can be accommodated by storages reserved for the thermodynamic data in labeled common/SPECES/. This excess number of species is given in the error message. When this situation occurs, the names of the possible species are printed and control is returned to the main program where the next case is read in.

   This situation can be resolved in two ways. First, the program can be recompiled with dimensions increased to accommodate the excess species. Secondly, ØMIT cards can be used to eliminate the required number of excess species.

   The program is currently dimensioned for 115 species which has been found adequate for all problems calculated to date.

SUBROUTINE HCALC ERROR MESSAGES

1. "REACTANT (Number) IS NOT IN THERMO DATA" - Enthalpies can be calculated by the program only for those reactants that are also included as reaction species in the thermodynamic data. The error message is printed when this condition is not met. The program skips to the next case.

4.4 (Continued)

2. "REACTANT TEMPERATURE OUT OF RANGE OF THERMO DATA" - Subroutine HCALC permits calculation of thermodynamic data for reactants for temperatures that extend up to 20 percent beyond the temperature range over which the data have been fitted.

SUBROUTINE LEWIS ERROR MESSAGES

1. "ERROR IN LEWIS INPUT CARD. CONTENTS BELOW" - This message indicates a keypunching error in a control card, a missing control card, or an extraneous card. The entire contents of this card are ignored by the program.

2. "ERROR IN REACTANT CARDS" - This is due to an error in a chemical symbol s ch as the symbol not being left-adjusted or not included in BLØCK DATA. Program skips to next case.

SUBROUTINE ENDCSB ERROR MESSAGES

1. "ALPHA E MAX TOO SMALL"
   AØEM is input negative or zero.

2. "REI TOO LARGE"
   Nozzle opening diameter is greater than case diameter.

3. "INVALID BETA E"
   Ellipse ratio must be 1.0 ± .01.

SUBROUTINE SCI ERROR MESSAGES

1. "TDMAX GREATER THAN TAUM" Maximum burn distance in fore-head is greater than that for forward tangent plant.

SUBROUTINE GAMA2S ERROR MESSAGES

1. "NEGATIVE HEAD END WEB FRACTION Increase size of BTAØE.

SUBROUTINE AIBST ERROR MESSAGES

1. "ICOUNT = X X ITERATION FOR INCREMENT DISCHARGE PRESSURE..."
   This comment usually indicates a data error; however, it is possible for convergence failure in particular cases where the port-to-throat ratio os less than 1.10.

2. "ITERATION FOR INCREMENT X X DISCHARGE TEMPERATURE...."
   See (1) above. Also, frequently indicates a c* input value which is not sufficiently consistent with burn rate equation constants, or an incorrect input value f or VFHØ or VCHINP.

4.4 (Continued)

SUBROUTINE SETPH ERROR MESSAGES

1. "AT = xxxx.xxx, THROAT AREA GREATER....." The throat area is too large to maintain sonic flow; decrease throat diameter. This comment is followed by the relevant nozzle and discharge parameters.

2. "ITERATION FOR NOZZLE PRESSURE RATIO....." Failure at this point generally indicates an input error.

SUBROUTINE TISUB ERROR MESSAGES

1. "SLOT NUMBER X X HAS BURNED INTO ...." With anisotropic burning it is possible for the slot face to burn into the fore-head section; relocate slot or modify burn rate.

SUBROUTINE LIN ERROR MESSAGES

1. "THE INDEPENDENT ENTRY IS ABOVE OR BELOW THE TABLE" "TABLE NO. = N" - The dependent variable is out of the range of XTABLE. The subroutine LIN is called from a subroutine with the table number N in the call statement. The program will stop when this error occurs.

SUBROUTINE XLIN ERROR MESSAGES

1. "X IS OUT OF RANGE IN XLIN" - This error statement may be generated only from calls in the IBM module. The program will continue after this message. The independent variable that is returned from XLIN after this message is issued will be unpredictable.

SUBROUTINE IDNØZL ERROR MESSAGES

1. "THE VALUE COMPUTED FOR GAMMA IS NOT WITHIN THE LIMITS (1.0, 1.7). CASE REJECTED" - Check input data for ID NOZZLE control section.

APPENDIX A

THERMO DATA (FORMAT AND LISTING)
MSFC TAPE 23810

ORDER	CONTENTS	FORMAT	CARD COLUMNS
1	THERMO*	3A4	1 to 6
2	Temperature ranges for 2 sets of coefficients: lowest T, common T, and highest T*	3F10.3	1 to 30
3	Species name	3A4	1 to 12
	Date	2A3	19 to 24
	Atomic symbols and formula	4(A2,F3.0)	25 to 44
	Phase of species (S, L, or G for solid, liquid, or gas, respectively)	A1	45
	Temperature range	2F10.3	46 to 65
	Integer 1	I15	80
4	Coefficients a_i (i = 1 to 5) in equations (90) to (92) (for upper temperature interval)	5(E15.8)	1 to 75
	Integer 2	I5	80
5	Coefficients in equations (90) to (92) (a_6, a_7 for upper temperature interval, and a_1, a_2, and a_3 for lower)	5(E15.8)	1 to 60
	Integer 3	I5	80
6	Coefficients in equations (90) to (92) (a_4, a_5, a_6, a_7 for lower temperature interval)	4(E15.8)	
	Integer 4	I20	80
(a)	Repeat cards numbered 1 to 4 in cc 80 for each species		
(Final card)	END (Indicates end of thermodynamic data)	3A4	1 to 3

[a]Gaseous species and condensed species with only one condensed phase can be in any order. However, the sets for two or more condensed phases of the same species must be adjacent. If there are more than two condensed phases of a species, their sets must be either in increasing or decreasing order according to their temperature intervals.

*NOT INCLUDED ON THERMO TAPE.

APPENDIX A (CONTINUED)

```
   300.000  1000.000  5000.000
AL(S)                J12/65AL  10   00   00   05   300.000   933.000                1
 0.              0.              0.              0.              0.                  2
 0.              0.              0.22258601E 01 0.25561698E-02 0.25963942E-06       3
-0.44923993E-08 0.38348586E-11-0.77250039E 03-0.10016767E 02                        4
AL(L)                J12/65AL  10   00   00   0L   933.000  5000.000                1
 0.38185052E 01 0.              0.              0.              0.                  2
-0.96116844E 02-0.17518952E 02 0.38185052E 01 0.              0.                  3
 0.              0.             -0.96116844E 02-0.17518952E 02                       4
AL                   J12/65AL  100  000  000  0G   300.000  5000.000                1
 0.25450650E 01-0.75157512E-04 0.48674178E-07-0.14045399E-10 0.15219285E-14        2
 0.38498957E 05 0.53100256E 01 0.27964983E 01-0.12468495E-02 0.20733316E-05        3
-0.15487769E-08 0.43185442E-12 0.38456100E 05 0.41365426E 01                        4
AL+                  J 6/65AL  1E  -100  000  0G   300.000  5000.000                1
 0.25138516E 01-0.29077490E-04 0.20604308E-07-0.59989578E-11 0.62050860E-15        2
 0.10859636E 06 0.37023323E 01 0.25006758E 01-0.44314947E-05 0.10158061E-07        3
-0.97918340E-11 0.33894328E-14 0.10860109E 06 0.37744969E 01                        4
ALBO2                J 6/66AL  1B   10   200  0G   300.000  5000.000                1
 0.71722995E 01 0.29780741E-02-0.12431107E-05 0.23188779E-09-0.16041208E-13        2
-0.67683682E 05-0.99949242E 01 0.23087234E 01 0.18890539E-01-0.20633348E-04        3
 0.10251324E-07-0.16941283E-11-0.66482167E 05 0.14463834E 02                        4
ALCL                 J 6/70AL  1CL  10   00   0G   300.000  5000.000                1
 0.43563254E 01 0.21481038E-03-0.63418363E-07 0.77108289E-11 0.34543444E-15        2
-0.75342648E 04 0.24319991E 01 0.33408612E 01 0.43425036E-02-0.63963588E-05        3
 0.42909163E-08-0.10621482E-11-0.73299697E 04 0.73232428E 01                        4
ALCL+                J 6/70AL  1CL  1E  -10   0G   300.000  5000.000                1
 0.43784585E+01 0.18169186E-03-0.48504690E-07 0.71019132E-11-0.19982016E-15        2
 0.10181202E+06 0.30944625E+01 0.33659977E+01 0.43496384E-02-0.65940531E-05        3
 0.45906177E-08-0.11936524E-11 0.10201517E+06 0.79636468E+01                        4
ALCLF                J 9/64AL  1CL  1F   100  0G   300.000  5000.000                1
 0.64598861E 01 0.59830273E-03-0.25682111E-06 0.48695729E-10-0.34023629E-14        2
-0.62463694E 05-0.33724191E 01 0.35819421E 01 0.11405579E-01-0.15489628E-04        3
 0.93919221E-08-0.20431534E-11-0.61839641E 05 0.10712370E 02                        4
ALCLF2               J 9/64AL  1CL  1F   200  0G   300.000 .5000.000                1
 0.89238843E 01 0.11946919E-02-0.51514910E-06 0.98204862E-10-0.68997466E-14        2
-0.12250084E 06-0.15879099E 02 0.42218325E 01 0.18167323E-01-0.23359617E-04        3
 0.13307895E-07-0.26426994E-11-0.12144555E 06 0.73068482E 01                        4
ALCL2                J 9/64AL  1CL  200  000  0G   300.000  5000.000                1
 0.66933063E 01 0.33723139E-03-0.14321882E-06 0.26838301E-10-0.18532160E-14        2
-0.39836262E 05-0.38121908E 01 0.43363468E 01 0.99563726E-02-0.15049433E-04        3
 0.10272735E-07-0.26037172E-11-0.39361237E 05 0.75382417E 01                        4
```

ORIGINAL PAGE IS
OF POOR QUALITY

APPENDIX A (CONTINUED)

```
ALCL2+                J 6/68      AL 1.   CL 2.   E -1.   0 C.   G        300.000       5000.000      1
  0.71787688E+01   0.34798442E-03   -0.14533263E-06   0.76764431E-10   -0.18163[illegible]E-14   2
  0.53108995E+05  -0.55391813E+01    0.47027704E+01   0.10479953E-01   -0.15939865E-04   3
  0.11000908E-07  -0.28333967E-11    0.53608594E+05   0.23835549E+01                     4

ALCL2-                J 6/68      AL 1.   CL 2.   E  1.   0 C.   G        300.000       5000.000      1
  0.66765484E+01   0.35806464E-03   -0.15322113E-06   0.28934079E-10   -0.20128276E-14   2
 -0.42352615E+05  -0.44184290E+01    0.42601657E+01   0.10221323E-01   -0.15461789E-04   3
  0.16586298E-07  -0.26576715E-11   -0.41865198E+05   0.72193011E+01                     4

ALCL2F                J 9/64      AL 1.   CL 2.   F  1.   00 0.   G        300.000       5000.000      1
  0.91851571E+01   0.90569396E-03   -0.39032122E-06   0.74305714E-10   -0.52114210E-14   2
 -0.97869793E+05  -0.15626927E+02    0.48609210E+01   0.17353741E-01   -0.24017667E-04   3
  0.14983444E-07  -0.34108042E-11   -0.96939961E+05   0.54911550E+01                     4

ALCL3(S)              J 6/70      AL 1.   CL 3.   0  0.   0  0.   S        300.000       465.700       1
  0.                0.                0.                0.                0.                0.                2
  0.                0.                0.98728292E+01   0.27331673E-02   -0.26131740E-04   3
  0.14485907E-06   -0.15684509E-09   -0.87914054E+05  -0.43727949E+02                     4

ALCL3(L)              J 6/70      AL 1.   CL 3.   0  0.   0  0.   L        465.700       3000.000      1
  0.15096884E+02   0.                0.                0.                0.                0.                2
 -0.85661733E+05  -0.65219455E+02    0.15096884E+02   0.                0.                0.                3
  0.                0.               -0.85661733E+05  -0.65219455E+02                     4

ALCL3                 J 6/70      AL 1.   CL 3.   0  0.   0  0.   G        300.000       5000.000      1
  0.94303940E+01   0.63466853E-03   -0.27374537E-06   0.52122178E-10   -0.36552953E-14   2
 -0.73286445E+05  -0.16464477E+02    0.56233670E+01   0.15859887E-01   -0.23385659E-04   3
  0.15600600E-07  -0.38581096E-11   -0.72503985E+05   0.19471337E+01                     4

ALF                   J 6/69      AL 1.   F  1.   0  0.   G  0.   G        300.000       5000.000      1
  0.41455463E+01   0.43007233E-03   -0.16165009E-06   0.30017406E-10   -0.20533756E-14   2
 -0.33233621E+05   0.19453316E+01    0.28306431E+01   0.47519307E-02   -0.52178235E-05   3
  0.23098181E-08  -0.23263553E-12   -0.32918090E+05   0.85323219E+01                     4

ALF+                  J 6/68      AL 1.   F  1.   E -1.   0  0.   G        300.000       5000.000      1
  0.41987106E+01   0.38296900E-03   -0.13075649E-06   0.22591321E-10   -0.13164857E-14   2
  0.79682722E+05   0.24475601E+01    0.28575830E+01   0.50617403E-02   -0.61248583E-05   3
  0.32221582E-08  -0.54448503E-12    0.79991210E+05   0.90992312E+01                     4

ALF2                  J 9/64      AL 1.   F  2.   00 0.   00 0.   G        300.000       5000.000      1
  0.61804240E+01   0.90488677E-03   -0.38832937E-06   0.73713932E-10   -0.51591978E-14   2
 -0.85071157E+05  -0.39592296E+01    0.33301702E+01   0.10295891E-01   -0.11444803E-04   3
  0.51484409E-08  -0.56416287E-12   -0.84387796E+05   0.10315035E+02                     4

ALF2+                 J 6/68      AL 1.   F  2.   E -1.   0  0.   G        300.000       5000.000      1
  0.68767776E+01   0.68899880E-03   -0.29551540E-06   0.56021377E-10   -0.39146708E-14   2
  0.14916320E+05  -0.10625708E+02    0.37787286E+01   0.12332101E-01   -0.16840570E-04   3
  0.10394906E-07  -0.23427970E-11    0.19590891E+05   0.45427075E+01                     4

ALF2-                 J 6/68      AL 1.   F  2.   E  1.   0  0.   G        300.000       5000.000      1
  0.61130125E+01   0.97687473E-03   -0.41809432E-06   0.79151704E-10   -0.55256597E-14   2
 -0.93104129E+05  -0.46096515E+01    0.30389102E+01   0.11066587E-01   -0.12222733E-04   3
  0.54253437E-08  -0.56268792E-12   -0.89365118E+05   0.10795330E+02                     4

ALF3(S)               J 6/70      AL 1.   F  3.   0  0.   0  0.   S        300.000       728.000       1
  0.                0.                0.                0.                0.                0.                2
  0.                0.                0.14269888E-01   0.44131411E-01   -0.42722128E-04   3
 -0.27469990E-07   0.50284236E-10   -0.18322252E+06  -0.31981506E+01                     4

ALF3(S)               J 6/70      AL 1.   F  3.   0  0.   0  0.   S        728.000       2500.000      1
  0.10355394E+02   0.24923488E-02   -0.10104245E-05   0.33097533E-09   -0.40272635E-13   2
 -0.14490485E+06  -0.52022356E+02    0.92673507E+01   0.41513748E-02   0.17321754E-05   3
 -0.59286416E-08   0.29057614E-11   -0.18458483E+06  -0.46196712E+02                     4

ALF3                  J 6/70      AL 1.   F  3.   0  0.   0  0.   G        300.000       5000.000      1
  0.86469682E+01   0.15008085E-02   -0.64734000E-06   0.12349330E-09   -0.86836066E-14   2
 -0.14835752E+06  -0.17033509E+02    0.36494100E+01   0.18770395E-01   -0.22670921E-04   3
  0.11942435E-07  -0.20760702E-11   -0.14719481E+06   0.78078075E+01                     4

ALH                   J 6/63      AL 1.   H  1.   00 0.   00 0.   G        300.000       5000.000      1
  0.33366858E+01   0.12877864E-02   -0.49869941E-06   0.92294633E-10   -0.63451654E-14   2
  0.30091761E+05   0.30823232E+01    0.36576857E+01   -0.19744698E-02   0.68663398E-05   3
 -0.62041404E-08   0.18663103E-11    0.30146458E+05   0.20753460E+01                     4

ALN(S)                J12/62      AL 1.   N  1.   00 0.   00 0.   S        300.000       3000.000      1
  0.47789460E+01   0.20198158E-02   -0.12548670E-05   0.36283351E-09   -0.39253241E-13   2
  0.40062784E+05   -0.26691961E+02   -0.77586859E-01   0.17149061E-01   -0.17948725E-04   3
  0.72995227E-08   -0.55492547E-12   -0.38837399E+05   -0.15105473E+01                    4
```


ORIGINAL PAGE IS
OF POOR QUALITY

APPENDIX A (CONTINUED)

```
ALN                 J 3/67      AL 1.   N  1.   00 0.   GG 0.   G      300.000      5000.000      1
  0.40281038E+01   0.56430940E-03  -0.22198395E-06   0.42074947E-10  -0.29421[illegible]E-14   2
  0.51028644E+05   0.21456703E+01   0.28422305E+01   0.39430202E-02   0.32513[illegible]E-05   3
  0.58151994E-09   0.29409158E-12   0.51340666E+05   0.82192666E+01                            4

ALO                 J 6/70      AL 1.   O  1.   O  0.   O  0.   G      300.000      5000.000      1
  0.33971343E+01   0.88561163E-03   0.35688404E-06  -0.19452654E-09   0.20793512E-13   2
  0.90775178E+04   0.67401137E+01   0.28793465E+01   0.34621618E-02  -0.20990129E-05   3
 -0.67940376E-09   0.90680502E-12   0.90716797E+04   0.89123858E+01                            4

ALO+                J 6/70      AL 1.   O  1.   E -1.  O  0.   G      300.000      5000.000      1
  0.89679966E+01  -0.29837240E-02   0.66474633E-06  -0.33205343E-10  -0.27636991E-14   2
  0.11640682E+06  -0.27398300E+02   0.52645833E+01  -0.14604473E-01   0.38819976E-04   3
 -0.28971726E-07   0.55086864E-11   0.11903587E+06  -0.16025824E+01                            4

ALOCL               J 9/64      AL 1.   O  1.   CL 1.   00 0.   G      300.000      5000.000      1
  0.67805200E+01   0.79662822E-03  -0.34233355E-06   0.45022648E-10  -0.45519157E-14   2
 -0.44080832E+05  -0.93132976E+01   0.32444409E+01   0.14117005E-01  -0.19322618E-04   3
  0.11962758E-07  -0.27069180E-11  -0.43312343E+05   0.79922149E+01                            4

ALOF                J 3/64      AL 1.   O  1.   F  1.   00 0.   G      300.000      5000.000      1
  0.64258966E+01   0.11928086E-02  -0.51432842E-06   0.48028753E-10  -0.68852831E-14   2
 -0.72744937E+05  -0.93256977E+01   0.17646910E+01   0.17838439E-01  -0.22537031E-04   3
  0.12468245E-07  -0.23392213E-11  -0.71691933E+05   0.13697771E+02                            4

ALOH                J12/67      AL 1.   O  1.   H  1.   O  0.   G      300.000      5000.000      1
  0.36860674E+01   0.33636822E-02  -0.12466244E-05   0.21382205E-09  -0.13898319E-13   2
 -0.23046105E+05   0.36769913E+01   0.26132211E+01   0.27716494E-02   0.74157830E-05   3
 -0.11354602E-07   0.45569559E-11  -0.22586797E+05   0.10662166E+02                            4

ALOH+               J12/67      AL 1.   O  1.   H  1.   E -1.  G      300.000      5000.000      1
  0.41624797E+01   0.28687165E-02  -0.10416371E-05   0.17575550E-09  -0.11271622E-13   2
 -0.15314295E+04   0.25596643E+01   0.19486482E+01   0.80052285E-02  -0.25070514E-05   3
 -0.37733878E-08   0.24806051E-11  -0.90847219E+03   0.14141878E+02                            4

ALOH-               J12/67      AL 1.   O  1.   H  1.   E  1.   G      300.000      5000.000      1
  0.43010718E+01   0.21668503E-02  -0.73988645E-06   0.11821055E-09  -0.72208841E-14   2
 -0.29134095E+05   0.35138246E+01   0.29130204E+01   0.99530715E-02  -0.30558094E-05   3
 -0.12598709E-08   0.12886094E-11  -0.28781827E+05   0.10609284E+02                            4

ALO2                J12/68      AL 1.   O  2.   O  0.   O  0.   G      300.000      5000.000      1
  0.65519349E+01   0.10730596E-02  -0.47379153E-06   0.71825185E-10  -0.63074266E-14   2
 -0.24316483E+05  -0.85088553E+01   0.32187326E+01   0.12556176E-01  -0.14970696E-04   3
  0.76845277E-08  -0.12520185E-11  -0.23541570E+05   0.80619547E+01                            4

ALO2-               J12/68      AL 1.   O  2.   E  1.   O  0.   G      300.000      5000.000      1
  0.62810376E+01   0.13358850E-02  -0.57146602E-06   0.10835642E-09  -0.75832579E-14   2
 -0.79094903E+05  -0.86956341E+01   0.32378637E+01   0.10596234E-01  -0.10216156E-04   3
  0.34746059E-08   0.53681451E-13  -0.74320823E+05   0.67504624E+01                            4

ALO2H               J12/68      AL 1.   O  2.   H  1.   O  0.   G      300.000      5000.000      1
  0.64264346E+01   0.32230362E-02  -0.12139348E-05   0.21074500E-09  -0.13828000E-13   2
 -0.57626154E+05  -0.74707565E+01   0.24400456E+01   0.16149264E-01  -0.16033524E-04   3
  0.64466166E-08  -0.40994769E-12  -0.56682759E+05   0.12293907E+02                            4

AL2CL6              J 6/70      AL 2.   CL 6.   O  0.   O  0.   G      300.000      5000.000      1
  0.20777546E+02   0.13601872E-02  -0.60321544E-06   0.11629451E-09  -0.82492947E-14   2
 -0.16239442E+06  -0.62364326E+02   0.11794306E+02   0.38358843E-01  -0.58530261E-04   3
  0.40496490E-07  -0.10456811E-10  -0.16059684E+06  -0.19173371E+02                            4

AL2F6               J 6/70      AL 2.   F  6.   O  0.   O  0.   G      300.000      5000.000      1
  0.18970021E+02   0.23816485E-02  -0.14664315E-05   0.28107845E-09  -0.19847452E-13   2
 -0.32318862E+06  -0.64016846E+02   0.57619594E+01   0.51454933E-01  -0.66963309E-04   3
  0.38886879E-07  -0.79939883E-11  -0.32024153E+06   0.10213077E+01                            4

AL2O                J 9/65      AL 2.   O  1.   00 0.   00 0.   G      300.000      5000.000      1
  0.61309407E+01   0.96280169E-03  -0.41516089E-06   0.79211578E-10  -0.55717813E-14   2
 -0.17829876E+05  -0.44030124E+01   0.34117107E+01   0.96968909E-02  -0.10306122E-04   3
  0.42754762E-08  -0.32573380E-12  -0.17165730E+05   0.92734405E+01                            4

AL2O+               J 6/68      AL 2.   O  1.   E -1.  O  0.   G      300.000      5000.000      1
  0.61392920E+01   0.94649579E-03  -0.40671071E-06   0.77181909E-10  -0.54019669E-14   2
  0.71439805E+05  -0.40782213E+01   0.33916609E+01   0.98668013E-02  -0.10650036E-04   3
  0.46034848E-08  -0.43845353E-12   0.72108359E+05   0.97287393E+01                            4

AL2O2               J 9/65      AL 2.   O  2.   00 0.   00 0.   G      300.000      5000.000      1
  0.77227053E+01   0.25161623E-02  -0.10830293E-05   0.20637292E-09  -0.14502168E-13   2
 -0.51613928E+05  -0.13589237E+02   0.18895682E+01   0.19382190E-01  -0.16555645E-04   3
  0.32432492E-08   0.13877467E-11  -0.50096135E+05   0.16211774E+02                            4
```

APPENDIX A (CONTINUED)

```
AL2C2+              J 6/68      AL 2.   0  2.   E -1.   0  0.   G      300.000      5000.000      1
  0.80829239E+01    0.21259698E-02   -0.91603430E-06   0.17486147E-09   -0.12299640E-13   2
  0.63056018E+05   -0.14431680E+02    0.18140836E+01   0.22236435E-01   -0.23492858E-04   3
  0.94504231E-08   -0.55539774E-12    0.64583715E+05   0.17091430E+02                     4

AL2C3(S)            J 3/64      AL 2.   0  3.   00 0.   00 0.   S      300.000      2315.000      1
  0.12539023E+02    0.26483746E-02   -0.11252155E-08   -0.25404218E-09   0.50340253E-13   2
 -0.20591407E+06   -0.67517368E+02   -0.25071773E+01   0.62271160E-01   -0.09940806E-04   3
  0.60690359E-07   -0.15530958E-10   -0.20281921E+06   0.53456899E+01                     4

AL2C3(L)            J 3/64      AL 2.   0  3.   00 0.   00 0.   L      2315.000     5000.000      1
  0.17422481E+02    0.                0.                0.                0.                2
 -0.19704127E+06   -0.93759984E+02    0.                0.                0.                3
  0.                0.                0.                0.                                  4

AR                  L 5/66      AR 1.   00 0.   00 0.   00 0.   G      300.000      5000.000      1
  0.25000000E+01    0.                0.                0.                0.                2
 -0.74537502E+03    0.43660006E+01    0.25000000E+01   0.                0.                3
  0.                0.               -0.74537498E+03   0.43660006E+01                     4

AR+                 L12/66      AR 1.   E -1.   00 0.   00 0.   G      300.000      5000.000      1
  0.28420672E+01   -0.87648603E-04   -0.26463209E-07   0.12240311E-10   -0.11885139E-14   2
  0.18272563E+06    0.36720201E+01    0.24857001E+01   -0.55682660E-03   0.33194849E-05   3
 -0.39236795E-08    0.14143279E-11    0.18290215E+06   0.98880154E+01                     4

B(S)                J12/64      B 1.    0  0.   0  0.   0  0.   S      300.000      2450.000      1
  0.21353842E+01    0.62384876E-03    0.52269843E-06   -0.34412816E-09   0.5407C254E-13   2
 -0.82167211E+03   -0.12048934E+02   -0.13181931E+01   0.11950484E-01   -0.10999163E-04   3
  0.21567584E-08    0.12C198636E-11   -0.45597194E+02   0.91212201E+01                     4

B(L)                J12/64      B 1.    0  0.   0  0.   0  0.   L      2450.000     5000.000      1
  C.36735752E+01    0.                0.                0.                0.                2
  C.41164170E+03   -0.21C48345E+02    0.                0.                0.                3
  0.                0.                0.                0.                                  4

B                   J12/64      B 1.    00 0.   00 0.   00 0.   G      300.000      5000.000      1
  0.25124741E+01   -0.25820555E-04    0.18396000E-07   -0.55496146E-11   0.61869870E-15   2
  C.66076153E+05    0.41307260E+01    0.25022979E+01   -0.91340917E-06   -0.15435319E-07   3
  0.26217528E-10   -0.12048088E-13    0.66079744E+05   0.41856076E+01                     4

B+                  J12/67      B 1.    E -1.   0  0.   0  0.   G      300.000      5000.000      1
  0.25106353E+01   -0.22902600E-04    0.16805879E-07   -0.50849164E-11   0.54628543E-15   2
  0.16233962E+06    0.23484087E+01    0.24991667E+01   0.55246273E-05   -0.12871246E-07   3
  0.12516710E-10   -0.43867904E-14    0.16234334E+06   0.24093838E+01                     4

BCL                 J12/64      B 1.    CL 1.   00 0.   00 0.   G      300.000      5000.000      1
  0.41020571E+01    0.48659193E-03   -0.18864326E-06   0.35833342E-10   -0.25099069E-14   2
  0.15687958E+05    0.19420655E+01    0.28364463E+01   0.44368812E-02   -0.43887522E-05   3
  0.15161078E-08    0.32646195E-13    0.16001361E+05   0.83321464E+01                     4

BCL+                J 6/68      B 1.    CL 1.   E -1.   0  0.   G      300.000      5000.000      1
  0.41060888E+01    0.47274170E-03   -0.17928584E-06   0.32416137E-10   -0.20545758E-14   2
  0.14713097E+06    0.26295615E+01    0.28124197E+01   0.46606392E-02   -0.48119962E-05   3
  0.19672216E-08   -0.13837802E-12    0.14744849E+06   0.91435145E+01                     4

BCLF                J12/64      B 1.    CL 1.   F 1.    00 0.   G      300.000      5000.000      1
  0.57076757E+01    0.14100203E-02   -0.60114137E-06   0.11367044E-09   -0.79368063E-14   2
 -0.39693327E+05   -0.15482176E+01    0.33120234E+01   0.74198763E-02   -0.43485949E-05   3
 -0.11374057E-08    0.13763890E-11   -0.39017548E+05   0.10935177E+02                     4

BCL2                J12/64      B 1.    CL 2.   00 0.   00 0.   G      300.000      5000.000      1
  0.61443257E+01    0.94438848E-03   -0.40551078E-06   0.77051714E-10   -0.53990787E-14   2
 -0.12097450E+05   -0.29714082E+01    0.33841928E+01   0.98759716E-02   -0.10655482E-04   3
  0.45615910E-08   -0.41141656E-12   -0.11426382E+05   0.10894976E+02                     4

BCL2+               J 6/68      B 1.    CL 2.   E -1.   0  0.   G      300.000      5000.000      1
  0.69266627E+01    0.67777633E-03   -0.32101496E-06   0.68344422E-10   -0.50073592E-14   2
  0.72265517E+05   -0.89477869E+01    0.42704931E+01   -0.10603791E-01   -0.14229838E-04   3
  0.85372831E-08   -0.18349671E-11    0.72843711E+05   0.40632904E+01                     4

BCL2-               J12/68      B 1.    CL 2.   E 1.    0  0.   G      300.000      5000.000      1
  0.35372980E+01    0.55328727E-02   -0.24170616E-05   0.43028670E-09   -0.27506067E-13   2
 -0.14175400E+05    0.10676285E+02    0.32792458E+01   0.10588377E-01   -0.12953143E-04   3
  0.74448800E-08   -0.13034773E-11   -0.14431529E+05   0.10652174E+02                     4

BCL3                J12/64      B 1.    CL 3.   00 0.   00 0.   G      300.000      5000.000      1
  0.85985380E+01    0.15531923E-02   -0.67000607E-06   0.12789112E-09   -0.90000659E-14   2
 -0.91357071E+05   -0.15171594E+02    0.37395265E+01   0.18105813E-01   -0.21340461E-04   3
  0.10828315E-07   -0.17325967E-11   -0.40214609E+05   0.40399632E+01                     4
```


ORIGINAL PAGE IS
OF POOR QUALITY

APPENDIX A (CONTINUED)

```
BF                J12/64        B  1.   F  1.   00 0.   00 0.   G        300.000        5000.000        1
  0.35771888E+01  0.10192968E-02  -0.41251564E-06  0.77196438E-10  -0.5[illegible]1498741E-14
 -0.15127264E+05  0.12529088E+01   0.34613609E+01 -0.95685468E-03   0.60135744E-05
 -0.64978057E-08  0.22355349E-11  -0.14969820E+05  0.44475660E+01                                  4

BF2               J12/64        B  1.   F  2.   00 0.   00 0.   G        300.000        5000.000        1
  0.52460775E+01  0.18501144E-02  -0.80019689E-06  0.15567869E-09   0.10493457E-13                 2
 -0.67259288E+05 -0.11478548E+01   0.34562272E+01  0.47104060E-02   0.10913079E-05                 3
 -0.52261995E-08  0.24432891E-11  -0.66657098E+05  0.[illegible]9412E+01                           4

BF2+              J 6/68        B  1.   F  2.   E -1.   0 0.   G        300.000        5000.000        1
  0.58127638E+01  0.18193424E-02  -0.77103457E-06  0.14487782E-09   -0.99909158E-14                2
  0.40267084E+05 -0.70174886E+01   0.33146474E+01  0.36443654E-02   -0.67525196E-05                3
  0.13383665E-08  0.45114910E-12   0.40955931E+05  0.58815131E+01                                  4

BF2-              J12/68        B  1.   F  2.   E  1.   0 0.   G        300.000        5000.000        1
  0.57561208E+01  0.56712487E-03   0.51655707E-06  0.21643437E-09   0.21208230E-13                 2
 -0.70362679E+05 -0.44532839E+01   0.25987348E+01  0.97441257E-02   -0.70812555E-05                3
 -0.53870797E-10  0.14368424E-11  -0.69584957E+05  0.11530175E+02                                  4

BF3               J 6/69        B  1.   F  3.   0 0.   0 0.   G        300.000        5000.000        1
  0.70241985E+01  0.32221559E-02   0.13705154E-05  0.25919671E-09   -0.18122310E-13                2
 -0.13918072E+06 -0.11197486E+02   0.24468244E+01  0.15276312E-01   -0.10784617E-04                3
  0.68907502E-09  0.14093187E-11  -0.13790135E+06  0.12554636E+02                                  4

BH                J12/64        B  1.   H  1.   00 0.   00 0.   G        300.000        5000.000        1
  0.28919079E+01  0.15832946E-02  -0.58261729E-06  0.10242068E-09   -0.47669549E-14                2
  0.52328714E+05  0.37829483E+01   0.36862206E+01 -0.13065435E-02   0.26742105E-05                3
 -0.91073738E-09 -0.15591136E-12   0.52176330E+05 -0.68540385E-01                                  4

BHF2              J12/65        B  1.   H  1.   F  2.   00 0.   G        300.000        5000.000        1
  0.53184527E+01  0.47444466E-02  -0.19337858E-05  0.35508382E-09   -0.24293667E-13                2
 -0.90375012E+05 -0.30563344E+01   0.24053602E+01  0.32755944E-02   0.13386461E-05                3
 -0.86807895E-08  0.41211015E-11  -0.89388409E+05  0.12874850E+02                                  4

BH2               J12/64        B  1.   H  2.   00 0.   00 0.   G        300.000        5000.000        1
  0.33625285E+01  0.39012854E-02  -0.15097551E-05  0.26672405E-09   -0.17713053E-13                2
  0.22919028E+05  0.12459933E+01   0.23958282E+01  0.74776260E-02   -0.72019514E-05                3
  0.45826398E-08 -0.12510680E-11   0.23162650E+05  0.60631811E+01                                  4

BH3               J12/64        B  1.   H  3.   00 0.   00 0.   G        300.000        5000.000        1
  0.20621726E+01  0.72655895E-02  -0.27510337E-05  0.47803709E-09   -0.31334285E-13                2
  0.11923753E+05  0.88361664E+01   0.39487033E+01 -0.52170543E-03   0.76481164E-05                3
 -0.46148694E-08  0.56318616E-12   0.11618809E+05 -0.58801882E-01                                  4

BN(S)             J 6/66        B  1.   N  1.   00 0.   00 0.   S        300.000        3500.000        1
  0.90909293E+00  0.81143277E-02  -0.48032086E-05  0.12291916E-08   -0.11517125E-12                2
 -0.30858565E+05 -0.58284489E+01  -0.11182452E+01  0.15038275E-01   -0.11887860E-04                3
  0.21058502E-08  0.11562119E-11  -0.30413091E+05  0.41742190E+01                                  4

BN                J 6/66        B  1.   N  1.   00 0.   00 0.   G        300.000        5000.000        1
  0.35981832E+01  0.87176805E-03  -0.29972644E-06  0.56036944E-10   -0.40750421E-14                2
  0.56171241E+05  0.45869994E+01   0.35375065E+01 -0.13556586E-02   0.62214189E-05                3
 -0.61683269E-08  0.19872461E-11   0.56329743E+05  0.55499509E+01                                  4

BC                J 6/68        B  1.   C  1.   0 0.   0 0.   G        300.000        5000.000        1
  0.31564956E+01  0.13816589E-02  -0.55049630E-06  0.99116678E-10   -0.64164546E-14                2
 -0.10303422E+04  0.60242706E+01   0.37297250E+01 -0.20878324E-02   0.57362849E-05                3
 -0.43894828E-08  0.10916632E-11  -0.10618859E+04  0.36123221E+01                                  4

BCCL              J 3/65        B  1.   C  1.   CL 1.   00 0.   G        300.000        5000.000        1
  0.57135566E+01  0.18664689E-02  -0.77487898E-06  0.14398572E-09   -0.99317745E-14                2
 -0.39977353E+05 -0.48935834E+01   0.32705321E+01  0.10227750E-01   -0.12070163E-04                3
  0.72025562E-08 -0.16914738E-11  -0.39378208E+05  0.73361224E+01                                  4

BCF               J 3/65        B  1.   C  1.   F  1.   00 0.   G        300.000        5000.000        1
  0.52618488E+01  0.23462431E-02  -0.97620810E-06  0.18167625E-09   -0.12545891E-13                2
 -0.74324949E+05 -0.40691029E+01   0.27741485E+01  0.93927631E-02   -0.79998507E-05                3
  0.27457058E-08 -0.11175219E-12  -0.73640460E+05  0.87507490E+01                                  4

BCF2              J12/66        B  1.   C  1.   F  2.   00 0.   G        300.000        5000.000        1
  0.73077233E+01  0.29903620E-02  -0.13059617E-05  0.25308242E-09   -0.17487333E-13                2
 -0.10334576E+06 -0.11205602E+02   0.17445977E+01  0.18693277E-01   -0.15246164E-04                3
  0.26559470E-08  0.13798606E-11  -0.10186758E+06  0.17339953E+02                                  4

BO2               J 6/68        B  1.   O  2.   O 0.   O 0.   G        300.000        5000.000        1
  0.58198434E+01  0.18626574E-02  -0.81302797E-06  0.15735821E-09   -0.10944238E-13                2
 -0.36255117E+05 -0.65741060E+01   0.31212048E+01  0.86680883E-02   -0.45972278E-05                3
 -0.16420021E-08  0.16658233E-11  -0.35483307E+05  0.75346936E+01                                  4
```

ORIGINAL PAGE IS
OF POOR QUALITY

APPENDIX A (CONTINUED)

```
PC2-                J12/68      B  1.   O  2.   E  1.   O  0.                    300.000     5000.000     1
     0.48805169E+01   0.26743651E-02  -0.10932194E-05   0.[illegible]   -0.13717[illegible]E 13   2
    -0.85284324E+05  -0.30224916E+01   0.24916437E+01   0.97470644[illegible]   -[illegible]E 05   3
     0.35802544E-08  -0.40611221E-12  -0.84641218E+05   0.92136785E+01                             4

BS                  J 3/65      B  1.   S  1.   OO 0.   OO 0.   G        300.000     5000.000     1
     0.37891419E+01   0.79620109E-03  -0.32499623E-06   0.61088740E-10  -0.42442958E-14   2
     0.39005219E+05   0.39725230E+01   0.31819722E+01   0.93156211E-03   0.29013371E-05   3
    -0.45074902E-08   0.18058145E-11   0.39248599E+05   0.74875225E+01                             4

B2                  J12/64      B  2.   OO 0.   OO 0.   OO 0.   G        300.000     5000.000     1
     0.39119970E+01   0.69145978E-03  -0.27146628E-06   0.51110913E-10  -0.35535657E-14   2
     0.96841827E+05   0.15798824E+01   0.29873313E+01   0.24672177E-02  -0.94106611E-07   3
    -0.21308174E-06   0.11299017E-11   0.97128274E+05   0.65267343E+01                             4

B2O                 J 6/66      B  2.   O  1.   OO 0.   OO 0.   G        300.000     5000.000     1
     0.47300538E+01   0.23941486E-02  -0.10004324E-05   0.18697510E-09  -0.12953672E-13   2
     0.98853354E+04  -0.64909402E+00   0.35294730E+01   0.31943826E-02   0.30329257E-05   3
    -0.57491255E-08   0.22847349E-11   0.10363201E+05   0.62263487E+01                             4

B2O2                J12/64      B  2.   O  2.   OO 0.   OO 0.   G        300.000     5000.000     1
     0.69938574E+01   0.35940393E-02  -0.14753611E-05   0.27225124E-09  -0.18695956E-13   2
    -0.57296178E+05  -0.12180996E+02   0.36807078E+01   0.15361132E-01  -0.18606097E-04   3
     0.12171451E-07  -0.32411018E-11  -0.56686647E+05   0.43429084E+01                             4

B2O3(L)             J12/64      B  2.   O  3.   OO 0.   OO 0.   L        300.000     5000.000     1
     0.18425107E+02  -0.44082357E-02   0.22160768E-05  -0.40762510E-09   0.35327399E-13   2
    -0.15806588E+06  -0.99478274E+02   0.28551333E+02  -0.17943221E+00   0.50520348E-03   3
    -0.52179873E-06   0.18327671E-09  -0.15465810E+06  -0.11793083E+03                             4

B2O3                J12/64      B  2.   O  3.   OO 0.   OO 0.   G        300.000     5000.000     1
     0.84015760E+01   0.47392003E-02  -0.19523814E-05   0.36115921E-09  -0.24845211E-13   2
    -0.10323545E+06  -0.15835109E+02   0.36780431E+01   0.26138386E-01  -0.21637125E-04   3
     0.11927398E-07  -0.25815915E-11  -0.10203007E+06   0.60209606E+01                             4

B3O3CL3             J 3/65      B  3.   O  3.   CL 3.   OO 0.   G        300.000     5000.000     1
     0.19282564E+02   0.63172581E-02  -0.27242926E-05   0.52047910E-09  -0.36677750E-13   2
    -0.20320883E+06  -0.67898332E+02   0.40444983E+01   0.54260597E-01  -0.55750761E-04   3
     0.22223128E-07  -0.14181295E-11  -0.19941632E+06   0.90435427E+01                             4

B3O3F3              J 3/65      B  3.   O  3.   F  3.   OO 0.   G        300.000     5000.000     1
     0.16858616E+02   0.88685754E-02  -0.37881058E-05   0.71870401E-09  -0.50376917E-13   2
    -0.29093104E+06  -0.59871948E+02   0.30798861E+01   0.45636592E-01  -0.33098826E-04   3
     0.25538839E-08   0.44358761E-11  -0.28712213E+06   0.11462196E+02                             4

BE(S)               J 9/61      BE 1.   O  0.   O  0.   O  0.   S        300.000     1556.000     1
     0.16386257E+01   0.18981070E-02  -0.51915094E-08  -0.40857551E-09   0.15576542E-12   2
    -0.54430876E+03  -0.87156145E+01  -0.53886197E+00   0.13250958E-01  -0.19860267E-04   3
     0.13938457E-07  -0.35115543E-11  -0.27818237E+03   0.10351100E+01                             4

BE(L)               J 9/61      BE 1.   O  0.   O  0.   O  0.   L       1556.000     5000.000     1
     0.31549997E+01  -0.46473346E-04   0.27783586E-06  -0.89431677E-10   0.81533123E-14   2
     0.30546750E+03  -0.16456535E+02   0.                0.                0.               3
     0.                0.               0.                0.                                         4

BE                  J 9/61      BE 1.   OO 0.   OO 0.   OO 0.   G        300.000     5000.000     1
     0.24060350E+01   0.18872751E-03  -0.11913206E-06   0.24933727E-10  -0.56423640E-15   2
     0.386661555E+05   0.26445402E+01   0.24982460E+01   0.12910008E-04  -0.33182303E-07   3
     0.35564329E-10  -0.13538107E-13   0.38633140E+05   0.21401114E+01                             4

BE+                 J 6/65      BE 1.   E -1.   OO 0.   OO 0.   G        300.000     5000.000     1
     0.25101862E+01  -0.21688740E-04   0.15756684E-07  -0.47788232E-11   0.52465496E-15   2
     0.14754576E+06   0.27707490E+01   0.24942738E+01   0.41392101E-04  -0.10472877E-06   3
     0.11080231E-09  -0.41739398E-13   0.14754985E+06   0.28498691E+01                             4

BEBO2               J 6/66      BE 1.   B  1.   O  2.   OO 0.   G        300.000     5000.000     1
     0.69108376E+01   0.32668684E-02  -0.13678120E-05   0.25576211E-09  -0.17727741E-13   2
    -0.60505715E+05  -0.91748501E+01   0.20069120E+01   0.18044824E-01  -0.16917581E-04   3
     0.60865373E-08  -0.17276285E-12  -0.59234197E+05   0.15792365E+02                             4

BECL                J 9/66      BE 1.   CL 1.   OO 0.   OO 0.   G        300.000     5000.000     1
     0.41052878E+01   0.47461701E-03  -0.17996528E-06   0.32563903E-10  -0.20652840E-14   2
     0.59753060E+04   0.24513644E+01   0.28321987E+01   0.44566764E-02  -0.44482161E-05   3
     0.15852507E-08   0.45206894E-14   0.62906248E+04   0.88784075E+01                             4

BECL+               J 6/68      BE 1.   CL 1.   E -1.   O  0.   G        300.000     5000.000     1
     0.53827500E+01  -0.18471198E-02   0.11123683E-05  -0.16952994E-09   0.61007091E-14   2
     0.11599717E+06  -0.50753759E+01   0.28965984E+01   0.51267492E-02  -0.64427911E-05   3
     0.35632640E-08  -0.65925088E-12   0.11671466E+06   0.78241359E+01                             4
```

APPENDIX A (CONTINUED)

```
BFCLF                J 6/65      BE 1.   CL 1.   F  1.   00 0.   G        300.000        5000.000      1
  0.64402791E+01    0.11463693E-02   -0.48545360E-06   0.12978695E-10   -0.63443549E-14   2
 -0.71059771E+05   -0.77418556E+01    0.41024381E+01   0.85017490E-02   -0.89193773E-05   3
  0.40076232E-08   -0.51627539E-12   -0.70468736E+05   0.40865069E+01                     4

BECL2(S)             J 6/65      BE 1.   CL 2.   00 0.   00 0.   S        300.000        688.000       1
  0.                0.                0.                0.                0.                2
  0.                0.                0.30065745E+01   0.19537559E-01   -0.48913605E-05   3
 -0.29604158E-07    0.23534861E-10   -0.60722100E+05   -0.12579772E+02                    4

BECL2(L)             J 6/65      BE 1.   CL 2.   00 0.   00 0.   L        688.000        5000.000      1
  0.14603719E+02    0.                0.                0.                0.                2
 -0.64498417E+05   -0.76448784E+02    0.14603719E+02   0.                0.                3
  0.                0.               -0.64498417E+05   -0.76449784E+02                    4

BECL2                J 6/65      BE 1.   CL 2.   00 0.   00 0.   G        300.000        5000.000      1
  0.67043191E+01    0.87166468E-03   -0.37255053E-06   0.70567006E-10   -0.49335340E-14   2
 -0.45494558E+05   -0.84351641E+01    0.44927125E+01   0.80535545E-02   -0.88112239E-05   3
  0.40897049E-08   -0.53498092E-12   -0.44952881E+05   0.26826696E+01                     4

BEF                  J 3/63      BE 1.   F  1.   00 0.   00 0.   G        300.000        5000.000      1
  0.37145220E+01    0.88446143E-03   -0.35713612E-06   0.67097461E-10   -0.46621039E-14   2
 -0.26229052E+05    0.31239768E+01    0.32725419E+01   0.28047431E-03    0.40167391E-05   3
 -0.52284254E-08    0.19629320E-11   -0.26012685E+05   0.58673716E+01                     4

BEF2(S)              J 6/70      BE 1.   F  2.   0  0.   0  0.   S        300.000        500.000       1
  0.                0.                0.                0.                0.                2
  0.                0.                0.20593770E+02   -0.66396930E-01   -0.12032358E-03   3
  0.89800555E-06   -0.56669264E-09   -0.12693708E+06   -0.91785113E+02                    4

BEF2(S)              J 6/70      BE 1.   F  2.   0  0.   0  0.   S        500.000        825.000       1
  0.                0.                0.                0.                0.                2
  0.                0.                0.56965576E+01   0.40254358E-02    0.                3
  0.                0.               -0.12528884E+06   -0.27091389E+02                    4

BEF2(L)              J 6/70      BE 1.   F  2.   0  0.   0  0.   L        825.000        2000.000      1
  0.60489639E+01    0.43328498E-02    0.18754403E-06   -0.36013482E-09    0.91339822E-13   2
 -0.12511361E+06   -0.29026248E+02    0.77423361E+01   -0.69686065E-03    0.26743406E-05   3
  0.31262542E-08   -0.25456279E-11   -0.12546530E+06   -0.37440304E+02                    4

BEF2                 J 6/70      BE 1.   F  2.   0  0.   0  0.   G        300.000        5000.000      1
  0.60457631E+01    0.15629374E-02   -0.66108197E-06   0.12447551E-09   -0.86716063E-14   2
 -0.97779127E+05   -0.79310455E+01    0.35234274E+01   0.93892284E-02   -0.95636208E-05   3
  0.42920989E-08   -0.57751113E-12   -0.97130461E+05   0.48708125E+01                     4

BEH                  J 3/63      BE 1.   H  1.   00 0.   00 0.   G        300.000        5000.000      1
  0.30570218E+01    0.14977223E-02   -0.56872963E-06   0.10260317E-09   -0.69166979E-14   2
  0.37639513E+05    0.33971052E+01    0.37312309E+01   -0.19143548E-02    0.48910325E-05   3
 -0.32925883E-08    0.66638562E-12    0.37565560E+05   0.37543895E+00                     4

BEH+                 J 9/66      BE 1.   H  1.   E -1.   00 0.   G        300.000        5000.000      1
  0.29015992E+01    0.16751761E-02   -0.66805503E-06   0.12510751E-09   -0.81741466E-14   2
  0.13816812E+06    0.35425415E+01    0.37095712E+01   -0.15852031E-02    0.36228769E-05   3
 -0.18933221E-08    0.17173264E-12    0.13802866E+06   -0.29598407E+00                    4

BEN                  J 6/63      BE 1.   N  1.   00 0.   00 0.   G        300.000        5000.000      1
  0.37855937E+01    0.82386575E-03   -0.37711602E-06   0.61551888E-10   -0.42809041E-14   2
  0.50066180E+05    0.30924194E+01    0.31684286E+01   0.10282483E-02    0.27376017E-05   3
 -0.43481099E-08    0.17534453E-11    0.50310451E+05   0.66493591E+01                     4

BEO(S)               J 9/63      BE 1.   O  1.   00 0.   00 0.   S        300.000        2820.000      1
  0.33180450E+01    0.55917212E-02   -0.46301271E-05   0.19108779E-08   -0.27843047E-12   2
 -0.73451553E+05   -0.19304223E+02   -0.19723348E+01   0.24764354E-01   -0.31498330E-04   3
  0.19540031E-07   -0.49216319E-11   -0.72270069E+05   0.67863119E+01                     4

BEO(L)               J 9/63      BE 1.   O  1.   00 0.   00 0.   L        2820.000       5000.000      1
  0.80512867E+01    0.                0.                0.                0.                2
 -0.71298168E+05   -0.46972346E+02    0.                0.                0.                3
  0.                0.                0.                0.                                   4

BEO                  J 9/63      BE 1.   O  1.   00 0.   00 0.   G        300.000        5000.000      1
  0.35048549E+01    0.10867884E-02   -0.43990877E-06   0.82088967E-10   -0.56778800E-14   2
  0.14435010E+05    0.33167347E+01    0.35250620E+01   -0.13044281E-02    0.62838237E-05   3
 -0.63674976E-08    0.20911849E-11    0.14562192E+05   0.38121456E+01                     4

BEOH                 J 9/63      BE 1.   O  1.   H  1.   00 0.   G        300.000        5000.000      1
  0.36351960E+01    0.28532436E-02   -0.10230326E-05   0.17069994E-09   -0.10840994E-13   2
 -0.13856067E+05    0.51296294E+01    0.37270356E+01   -0.34554324E-03    0.82188520E-05   3
 -0.92269046E-08    0.32518302E-11   -0.13732272E+05   0.53899404E+01                     4
```

APPENDIX A (CONTINUED)

```
BECH+                J 6/68      BE 1.   0  1.   H  1.   F -1.   G        300.000        5000.000                1
     0.37549335E+01    0.23439583E-02   -0.12505263E-05    0.21598927E-09   -0.14114718E-13                         2
     0.96194409E+05    0.14057049E+01    0.24619220E+01    0.36977984E-02    0.59446561E-05                         3
    -0.10392932E-07    0.43387733E-11    0.96693753E+05    0.88341583E+01                                           4

BEC2H2               J 3/67      BE 1.   0  2.   H  2.   00 0.   G        300.000        5000.000                1
     0.64863231E+01    0.58388339E-02   -0.21839203E-05    0.37665248E-09   -0.24568934E-13                         2
    -0.81124230E+05   -0.93680114E+01    0.24681022E+01    0.18712514E-01   -0.16655536E-04                         3
     0.62752158E-08   -0.30697537E-12   -0.80137138E+05    0.10855417E+02                                           4

BE2C                 J 9/63      BE 2.   0  1.   CO 0.   00 0.   G        300.000        5000.000                1
     0.54549734E+01    0.21970385E-02   -0.92919578E-06    0.17496410E-09   -0.12189982E-13                         2
    -0.94958985E+04   -0.56835860E+01    0.27527897E+02    0.69648699E-02   -0.55859247E-05                         3
    -0.34769188E-09    0.11015472E-11   -0.87174709E+04    0.54387556E+01                                           4

BE2CF2               J 6/66      BE 2.   0  1.   F  2.   00 0.   G        300.000        5000.000                1
     0.10311343E+02    0.29258151E-02   -0.12481987E-05    0.23652169E-09   -0.16559160E-13                         2
    -0.14844623E+06   -0.24500846E+02    0.48600226E+01    0.19438982E-01   -0.18018760E-04                         3
     0.71009503E-08   -0.37225258E-12   -0.14703959E+06    0.32285704E+01                                           4

BE2C2                J 9/63      BE 2.   0  2.   00 0.   00 0.   G        300.000        5000.000                1
     0.71783652E+01    0.30796926E-02   -0.13162273E-05    0.24970614E-09   -0.17496339E-13                         2
    -0.51984876E+05   -0.12938758E+02    0.17102739E+01    0.18244939E-01   -0.14377253E-04                         3
     0.21268816E-08    0.14691993E-11   -0.50512366E+05    0.15201347E+02                                           4

BE3C3                J 9/63      BE 3.   0  3.   00 0.   00 0.   G        300.000        5000.000                1
     0.91907322E+01    0.73623701E-02   -0.31292729E-05    0.59162589E-09   -0.41360154E-13                         2
    -0.13061849E+06   -0.23330043E+02    0.20002692E+01    0.20005172E-01    0.57517847E-06                         3
    -0.17092805E-07    0.84862785E-11   -0.12826867E+06    0.15607790E+02                                           4

BE4C4                J 9/63      BE 4.   0  4.   CO 0.   00 0.   G        300.000        5000.000                1
     0.14547030E+02    0.81903730E-02   -0.35162789E-05    0.66923457E-09   -0.47005963E-13                         2
    -0.19704845E+06   -0.51509929E+02   -0.13818438E+01    0.52384828E-01   -0.40893018E-04                         3
     0.47379707E-08    0.49954164E-11   -0.19278356E+06    0.30399903E+02                                           4

BR                   J 9/61      BR 1.   0  0.   0  0.   0  0.   G        300.000        5000.000                1
     0.21078104E+01    0.67357007E-03   -0.24505431E-06    0.35094374E-10   -0.17459156E-14                         2
     0.12852819E+05    0.89551809E+01    0.24659565E+01    0.29811604E-03   -0.91849574E-06                         3
     0.11307441E-08   -0.40664607E-12    0.12713949E+05    0.69293787E+01                                           4

BR2(L)               J 9/61      BR 2.   0  0.   0  0.   0  0.   L        265.900        1000.000                1
     0.                0.                0.                0.                0.                                       2
     0.                0.                0.15501419E+02   -0.46806826E-01    0.11978966E-03                         3
    -0.12886307E-06    0.49440410E-10   -0.33667597E+04   -0.60333606E+02                                           4

BR2                  J12/61      BR 2.   0  0.   0  0.   0  0.   G        300.000        5000.000                1
     0.44479495E+01    0.10051208E-03   -0.16393816E-07    0.22685621E-11   -0.10236774E-15                         2
     0.23659941E+04    0.40888431E+01    0.38469580E+01    0.26111841E-02   -0.40034147E-05                         3
     0.28120689E-08   -0.73256202E-12    0.24846984E+04    0.69696985E+01                                           4

C(S)                 J 3/61      C  1.   0  0.   0  0.   0  0.   S        300.000        5000.000                1
     0.13604942E+01    0.19182237E-02   -0.84040389E-06    0.16448707E-09   -0.11672670E-13                         2
    -0.64713870E+03   -0.80070207E+01   -0.44778053E+00    0.53691002E-02   -0.39775571E-06                         3
    -0.40459298E-08    0.21134939E-11   -0.94280688E+02    0.16850791E+01                                           4

C                    J 3/61      C  1.   00 0.   00 0.   00 0.   G        300.000        5000.000                1
     0.25810663E+01   -0.14696202E-03    0.74388084E-07   -0.79481079E-11    0.58900977E-16                         2
     0.85216294E+05    0.43128879E+01    0.25328705E+01   -0.15887641E-03    0.30682082E-06                         3
    -0.26770064E-09    0.87488827E-13    0.85240422E+05    0.46062374E+01                                           4

C+                   L12/66      C  1.   E -1.   00 0.   00 0.   G        300.000        5000.000                1
     0.25118274E+01   -0.17359784E-04    0.95042676E-08   -0.22188518E-11    0.18621892E-15                         2
     0.21667721E+06    0.42861298E+01    0.25953840E+01   -0.40686645E-03    0.68923669E-06                         3
    -0.52664878E-09    0.15083377E-12    0.21666281E+06    0.38957298E+01                                           4

C-                   J 9/65      C  1.   E  1.   00 0.   00 0.   G        300.000        5000.000                1
     0.24470591E+01    0.11286428E-03   -0.78591462E-07    0.19778614E-10   -0.11105555E-14                         2
     0.69972969E+05    0.42356992E+01    0.24925640E+01    0.53153068E-04   -0.13307954E-06                         3
     0.13951379E-09   -0.52150992E-13    0.69955757E+05    0.39811657E+01                                           4

CCL                  J12/69      C  1.   CL 1.   0  0.   0  0.   G        300.000        5000.000                1
     0.43984727E+01    0.50077845E-03   -0.20012833E-06    0.38680792E-10   -0.25441113E-14                         2
     0.59076599E+05    0.33370201E+01    0.31953557E+01    0.28076318E-02   -0.16043845E-05                         3
    -0.57744065E-09    0.61409732E-12    0.59325077E+05    0.80220197E+01                                           4

CCL2                 J12/68      C  1.   CL 2.   0  0.   0  0.   G        300.000        5000.000                1
     0.37184999E+01    0.53449745E-02   -0.23431284E-05    0.41806177E-09   -0.26765295E-13                         2
     0.27554793E+05    0.96328274E+01    0.28984505E+01    0.13957938E-01   -0.20038898E-04                         3
     0.15009726E-07   -0.31669715E-11    0.27363926E+05    0.12230161E+02                                           4
```

ORIGINAL PAGE IS OF POOR QUALITY

APPENDIX A (CONTINUED)

```
CCL3
                J 6/70      C  1.   CL 3.   0  0.   0  0.   G      300.000      5000.000      1
 0.87815473E+01  0.13516130E-02  -0.58249453E-06  0.11044697E-09  0.77937265E-14  2
 0.66344151E+04 -0.15329204E+02   0.17153357E+01  0.19441796E-01 -0.24627941E-04  3
 0.13786464E-07  0.24638934E-11   0.77920020E+04  0.97024310E+01                  4
CCL4
                J12/68      C  1.   CL 4.   0  0.   0  0.   G      300.000      5000.000      1
 0.11601304E+02  0.15550273E-02  -0.67045280E-06  0.12779337E-09  -0.89616450E-14  2
-0.15389852E+05 -0.30063473E+02   0.42667400E+01  0.27452617E-01  -0.40420450E-04  3
 0.25581544E-07  0.58756489E-11  -0.13810816E+05  0.97614468E+01                  4
CF
                J 6/70      C  1.    F  1.   0  0.   0  0.   G      300.000      5000.000      1
 0.34869679E+01  0.91143491E-03  -0.36463855E-06  0.67482854E-10  -0.45202596E-14  2
 0.29478125E+05  0.41613468E+01   0.34655143E+01  -0.68779805E-03  0.56734746E-05  3
-0.64582382E-08  0.22988248E-11   0.29655598E+05  0.38681916E+01                  4
CF2
                J 6/70      C  1.    F  2.   0  0.   0  0.   G      300.000      5000.000      1
 0.52267142E+01  0.20837680E-02  -0.99037278E-06  0.12694448E-09  -0.15831114E-13  2
-0.23755847E+05 -0.19240670E+01   0.27688821E+01  0.72372962E-02  -0.16024152E-05  3
-0.45512179E-08  0.26648011E-11  -0.23015786E+05  0.11124533E+02                  4
CF3
                J 6/69      C  1.    F  3.   0  0.   0  0.   G      300.000      5000.000      1
 0.72012622E+01  0.30663935E-02  -0.13144181E-05  0.24974925E-09  -0.17550728E-13  2
-0.53238631E+05 -0.10958873E+02   0.20650168E+01  0.16424158E-01  -0.10938146E-04  3
-0.85317997E-09  0.23678070E-11  -0.57811976E+05  0.15691530E+02                  4
CF4
                J 6/69      C  1.    F  4.   0  0.   0  0.   G      300.000      5000.000      1
 0.91644298E+01  0.41978941E-02  -0.17971486E-05  0.34132082E-09  -0.23934115E-13  2
-0.11571354E+06 -0.23292961E+02   0.11656107E+01  0.27177786E-01  -0.23317677E-04  3
 0.55706566E-08  0.12861856E-11  -0.11360052E+06  0.17670656E+02                  4
CH
                J12/61      C  1.    H  1.   0  0.   0  0.   G      300.000      5000.000      1
 0.22673116E+01  0.22043000E-02  -0.62250191E-06  0.69689940E-10  -0.21274952E-14  2
 0.70838037E+05  0.97489352E+01   0.35632752E+01  -0.20031372E-03  0.40129814E-06  3
 0.18226922E-08 -0.86768311E-12   0.70405506E+05  0.17628023E+01                  4
CH2
                J 6/69      C  1.    H  2.   0  0.   0  0.   G      300.000      5000.000      1
 0.25849263E+01  0.45499925E-02  -0.16974415E-05  0.29273414E-09  -0.19118520E-13  2
 0.43355512E+05  0.57255698E+01   0.27277046E+01  0.33512361E-02  0.11455341E-05  3
-0.25591078E-08  0.10457256E-11   0.45364444E+05  0.52009628E+01                  4
CH2O
                J 3/61      C  1.    H  2.   O  1.   O  0.   G      300.000      5000.000      1
 0.24364249E+01  0.68605298E-02  -0.26882647E-05  0.47971258E-09  -0.32118406E-13  2
-0.15236031E+05  0.78531169E+01   0.37963783E+01  -0.25701785E-02  0.18548815E-04  3
-0.17869177E-07  0.55604451E-11  -0.15088947E+05  0.47548163E+01                  4
CH3
                J 6/69      C  1.    H  3.   0  0.   0  0.   G      300.000      5000.000      1
 0.28400327E+01  0.60869086E-02  -0.21740338E-05  0.36042576E-09  -0.22725300E-13  2
 0.16449813E+05  0.55056751E+01   0.34660350E+01  0.38301845E-02  0.10116802E-05  3
-0.16859236E-08  0.66803182E-12   0.16313104E+05  0.24172192E+01                  4
CH4
                J 3/61      C  1.    H  4.   00 0.   00 0.   G      300.000      5000.000      1
 0.15027072E+01  0.10416798E-01  -0.39181522E-05  0.67777899E-09  -0.44283706E-13  2
-0.94787078E+04  0.10707143E+02   0.38261932E+01  -0.39794581E-02  0.24558360E-04  3
-0.22732926E-07  0.69626957E-11  -0.10144950E+05  0.86690073E+00                  4
CN
                J 6/69      C  1.    N  1.   0  0.   0  0.   G      300.000      5000.000      1
 0.36034285E+01  0.23644190E-03  0.10028933E-06  -0.16318166E-10  -0.36286722E-15  2
 0.51159833E+05  0.35454905E+01   0.37386307E+01  -0.19239224E-02  0.47035169E-05  3
-0.31113000E-08  0.61675319E-12   0.51270927E+05  0.34490218E+01                  4
CN+
                J 6/69      C  1.    N  1.   E -1.   0  0.   G      300.000      5000.000      1
 0.35522919E+01  0.81427579E-03  -0.20853348E-06  0.29071604E-10  -0.17865094E-14  2
 0.21486207E+06  0.43916910E+01   0.36175018E+01  -0.20179550E-02  0.79353855E-05  3
-0.77300616E-08  0.24798477E-11   0.21504159E+06  0.43579527E+01                  4
CN-
                J 6/69      C  1.    N  1.   E  1.   0  0.   G      300.000      5000.000      1
 0.29471725E+01  0.14988427E-02  -0.57579547E-06  0.10177789E-09  -0.67478503E-14  2
 0.71192780E+04  0.63743952E+01   0.37034310E+01  -0.14896426E-02  0.31864701E-05  3
-0.14831305E-08  0.48121663E-13   0.69884268E+04  0.27722843E+01                  4
CN2
                J 6/66      C  1.    N  2.   00 0.   00 0.   G      300.000      5000.000      1
 0.48209077E+01  0.24790014E-02  -0.94644109E-06  0.16548764E-09  -0.10899129E-13  2
 0.66685948E+05 -0.48684039E+00   0.35077779E+01  0.72023958E-02  -0.75574589E-05  3
 0.42979217E-08  -0.94257935E-12   0.68994281E+05  0.60234964E+01                  4
CO
                J 9/65      C  1.    O  1.   00 0.   00 0.   G      300.000      5000.000      1
 0.29840696E+01  0.14891390E-02  -0.57899684E-06  0.10366577E-09  -0.69151550E-14  2
-0.14245228E+05  0.63479156E+01   0.37100928E+01  -0.16190964E-02  0.36923594E-05  3
-0.20319674E-08  0.23953344E-12  -0.14356310E+05  0.29555351E+01                  4
```

APPENDIX A (CONTINUED)

```
CCCL                J12/65      C  1.   O  1.   CL 1.   CO 0.   G        300.000        5000.000          1
  0.54291236E+01   0.16121535E-02  -0.66006280E-06   0.14127114E-09  -0.82858601E-14                      2
 -0.93305007E+04   0.36571816E+00   0.42963792E+01   0.96606601E-02  -0.50729411E-05                      3
  0.29647983E-08  -0.77593453E-12  -0.90125212E+04   0.02385308E+01                                       4

CCCL2               J 6/61      C  1.   O  1.   CL 2.   CO 0.   G        300.000        5000.000          1
  0.77318082E+01   0.26789287E-02  -0.10111133E-05   0.18936214E-09  -0.13139156E-13                      2
 -0.29136566E+05  -0.11271674E+02   0.31156139E+01   0.16478474E-01  -0.22425444E-04                      3
  0.12868184E-07  -0.27960805E-11  -0.28064884E+05   0.11755297E+02                                       4

CCF                 J12/65      C  1.   O  1.   F  1.   CO 0.   G        300.000        5000.000          1
  0.44908214E+01   0.22179704E-02  -0.92550725E-06   0.17270120E-09  -0.11955343E-13                      2
 -0.22357984E+05   0.97962087E+00   0.32019727E+01   0.55837770E-02  -0.14905411E-05                      3
 -0.23126069E-08   0.13614353E-11  -0.21817043E+05   0.10947576E+02                                       4

CCF2                J12/69      C  1.   O  1.   F  2.   O  0.   G        300.000        5000.000          1
  0.65540365E+01   0.36729542E-02  -0.15470211E-05   0.29065749E-09  -0.20226548E-13                      2
 -0.79321725E+05  -0.81127751E+01   0.17973047E+01   0.16588712E-01  -0.12563807E-04                      3
  0.20091842E-08   0.11090041E-11  -0.78009422E+05   0.16478049E+02                                       4

CCS                 J 3/61      C  1.   O  1.   S  1.   CO 0.   G        300.000        5000.000          1
  0.52392000E+01   0.24100584E-02  -0.96064522E-06   0.17778347E-09  -0.12235704E-13                      2
 -0.18480455E+05  -0.30910517E+01   0.24625321E+01   0.11947992E-01  -0.13789370E-04                      3
  0.80707736E-08  -0.18327653E-11  -0.17803987E+05   0.10792556E+02                                       4

CC2                 J 9/65      C  1.   O  2.   CO 0.   CO 0.   G        300.000        5000.000          1
  0.44608041E+01   0.30581719E-02  -0.12392571E-05   0.22741325E-09  -0.15525954E-13                      2
 -0.48961442E+05  -0.98635982E+00   0.24007797E+01   0.87350957E-02  -0.66970078E-05                      3
  0.20021861E-06   0.63274039E-15  -0.48377527E+05   0.96951457E+01                                       4

CC2-                J12/66      C  1.   O  2.   F  1.   CO 0.   G        300.000        5000.000          1
  0.45454640E+01   0.26054316E-02  -0.10928732E-05   0.20494421E-09  -0.14184542E-13                      2
 -0.54761968E+05   0.18317369E+01   0.34743737E+01   0.16913805E-02   0.73533803E-05                      3
 -0.99554255E-08   0.36846719E-11  -0.54249049E+05   0.38343291E+01                                       4

CP                  J 6/62      C  1.   P  1.   CO 0.   CO 0.   G        300.000        5000.000          1
  0.37436117E+01   0.83611486E-03  -0.34116216E-06   0.63775863E-10  -0.44094630E-14                      2
  0.54969175E+05   0.42305583E+01   0.32385657E+01   0.51754367E-03   0.35657319E-05                      3
 -0.48985936E-08   0.18766551E-11   0.55196565E+05   0.72701279E+01                                       4

CS                  J12/62      C  1.   S  1.   CO 0.   CO 0.   G        300.000        5000.000          1
  0.36042533E+01   0.89086274E-03  -0.36600044E-06   0.68778176E-10  -0.47810000E-14                      2
  0.26452213E+05   0.38176082E+01   0.33093030E+01   0.28164439E-04   0.44317874E-05                      3
 -0.54253895E-08   0.20392468E-11   0.26658986E+05   0.62942707E+01                                       4

CS2                 J 6/61      C  1.   S  2.   O  0.   O  0.   G        300.000        5000.000          1
  0.59867719E+01   0.16394436E-02  -0.68384845E-06   0.12836890E-09  -0.89167449E-14                      2
  0.12043850E+05  -0.63598223E+01   0.32144238E+01   0.10643846E-01  -0.11062989E-04                      3
  0.52967662E-08  -0.83022696E-12   0.12745874E+05   0.76185765E+01                                       4

C2                  J12/69      C  2.   O  0.   O  0.   O  0.   G        300.000        5000.000          1
  0.40435359E+01   0.20573654E-03   0.10907575E-06  -0.36427874E-10   0.34127865E-14                      2
  0.99709486E+05   0.12775158E+01   0.74518140E+01  -0.10144686E-01   0.85879735E-05                      3
  0.87321100E-09  -0.24429792E-11   0.98911989E+05  -0.15846678E+02                                       4

C2-                 J12/69      C  2.   E  1.   O  0.   O  0.   G        300.000        5000.000          1
  0.36926257E+01   0.41576040E-03   0.11654211E-07   0.23755880E-11  -0.14505314E-14                      2
  0.52118953E+05   0.22470173E+01   0.37342914E+01  -0.23034649E-02   0.68417823E-05                      3
 -0.58120827E-08   0.16604296E-11   0.52281427E+05   0.27460423E+01                                       4

C2CL2               J12/68      C  2.   CL 2.   O  0.   O  0.   G        300.000        5000.000          1
  0.81728547E+01   0.23659892E-02  -0.96552505E-06   0.17736148E-09  -0.12135203E-13                      2
  0.22510190E+05  -0.14516744E+02   0.50229482E+01   0.14082667E-01  -0.18095669E-04                      3
  0.11610348E-07  -0.28817478E-11   0.23227482E+05   0.59684170E+00                                       4

C2F2                J12/67      C  2.   F  2.   O  0.   O  0.   G        300.000        5000.000          1
  0.75164581E+01   0.31686462E-02  -0.13311385E-05   0.24960049E-09  -0.17342072E-13                      2
 -0.16107655E+03  -0.15081225E+02   0.35345837E+01   0.14445845E-01  -0.12189652E-04                      3
  0.36042985E-08   0.19118951E-12   0.92133562E+03   0.54063023E+01                                       4

C2F4                J 6/69      C  2.   F  4.   O  0.   O  0.   G        300.000        5000.000          1
  0.11086468E+02   0.52788429E-02  -0.22354400E-05   0.42166846E-09  -0.29433914E-13                      2
 -0.83297884E+05  -0.29880044E+02   0.36166183E+01   0.26488618E-01  -0.22433266E-04                      3
  0.62286445E-08   0.62149244E-12  -0.81277242E+05   0.85106010E+01                                       4

C2H                 J 3/67      C  2.   H  1.   CO 0.   CO 0.   G        300.000        5000.000          1
  0.44207650E+01   0.22119301E-02  -0.59294965E-06   0.94195775E-10  -0.68527554E-14                      2
  0.59835444E+05  -0.11588093E+01   0.26499400E+01   0.84919515E-02  -0.98165375E-05                      3
  0.65373629E-08  -0.17356273E-11   0.56275751E+05   0.76898609E+01                                       4
```

ORIGINAL PAGE IS OF POOR QUALITY

APPENDIX A (CONTINUED)

```
C2HF              J12/67      C  2.   H  1.   F  1.   0  0.                    300.000     5000.000      1
  0.69949501E+01   0.39432478E-02  -0.14711431E-05   0.[illegible]   0.16[illegible]E-13   2
  0.12176907E+05  -0.83285675E+01   0.26901771E+01   0.17[illegible]   -0.2[illegible]E-04   3
  0.14920568E-07  -0.37381925E-11   0.13681223E+05   0.61338073E+01                        4

C2H2              J 3/61      C  2.   H  2.   00 0.   00 0.   G    300.000     5000.000      1
  0.45751083E+01   0.51238138E-02  -0.17452354E-05   0.[illegible]   -0.17[illegible]E-13   2
  0.25607428E+05  -0.35737940E+01   0.14107768E+01   0.19057275E-01   -0.24501[illegible]E-04   3
  0.16390872E-07  -0.41345447E-11   0.26180298E+05   0.11393827E+02                        4

C2H4              J 9/65      C  2.   H  4.   00 0.   00 0.   G    300.000     5000.000      1
  0.34552152E+01   0.11491853E-01  -0.43651750E-05   0.76155095E-09   -0.[illegible]E-13   2
  0.44773119E+04   0.26987959E+01   0.14258821E+01   0.11383140E-01   0.[illegible]E-05   3
  0.16253679E-07   0.67491256E-11   0.53370755E+04   0.14621815E+02                        4

C2N               J 3/67      C  2.   N  1.   00 0.   00 0.   G    300.000     5000.000      1
  0.61931308E+01   0.14327539E-02  -0.61255161E-06   0.11578707E-09   0.80401340E-14   2
  0.66818372E+05  -0.84132298E+01   0.32670394E+01   0.98211307E-02   -0.83284733E-05   3
  0.17650559E-08   0.59632768E-12   0.65589057E+05   0.45682304E+01                        4

C2N2              J 3/61      C  2.   N  2.   00 0.   00 0.   G    300.000     5000.000      1
  0.65968935E+01   0.38494131E-02  -0.14516161E-05   0.28141546E-09   -0.12[illegible]E-13   2
  0.34883726E+05  -0.10C01801E+02   0.39141782E+01   0.14611008E-01   -0.17404350E-04   3
  0.12012779E-07  -0.33565772E-11   0.35514550E+05   0.32304353E+01                        4

C2O               J 9/66      C  2.   O  1.   00 0.   00 0.   G    300.000     5000.000      1
  0.48990313E+01   0.28430346E-02  -0.10209669E-05   0.16112165E-09   -0.95542914E-14   2
  0.32800545E+05  -0.91382290E+00   0.35364815E+01   0.69543872E-02   -0.53071374E-05   3
  0.17032470E-08  -0.14108072E-13   0.33151572E+05   0.60172370E+01                        4

C3                J12/69      C  3.   O  0.   0  0.   0  0.   G    300.000     5000.000      1
  0.36815361E+01   0.24165736E-02  -0.84348112E-06   0.14508198E-09   -0.95697350E-14   2
  0.97413955E+05   0.68377802E+01   0.57408464E+01   -0.42812388E-02   0.18620148E-04   3
 -0.14510529E-07   0.39676977E-11   0.97157524E+05   -0.23637376E+01                        4

C3O2              J 6/68      C  3.   O  2.   0  0.   0  0.   G    300.000     5000.000      1
  0.81435964E+01   0.54395018E-02  -0.22192869E-05   0.40779627E-09   -0.27[illegible]E-13   2
  0.14290013E+05  -0.15456769E+02   0.37161005E+01   0.19872164E-01   -0.20435751E-04   3
  0.11750112E-07  -0.26589416E-11   -0.13089402E+05   0.59298412E+01                        4

C4                J12/69      C  4.   O  0.   0  0.   0  0.   G    300.000     5000.000      1
  0.65602101E+01   0.40985234E-02  -0.17000471E-05   0.31615228E-09   -0.21942144E-13   2
  0.11430434E+06   0.11F20311E+02   0.18432021E+01   0.19343592E-01   -0.20427502E-04   3
  0.10822626E-07   0.21289203E-11   0.11550276E+06   0.12006898E+02                        4

C5                J12/69      C  5.   O  0.   0  0.   0  0.   G    300.000     5000.000      1
  0.82067016E+01   0.54889888E-02  -0.22694876E-05   0.42073365E-09   -0.28991924E-13   2
  0.11463647E+06   0.20246108E+02   0.11012446E+01   0.29513421E-01   -0.33754342E-04   3
  0.19056534E-07  -0.40389014E-11   0.11637970E+06   0.15360193E+02                        4

CL                J 3/61      CL 1.   00 0.   00 0.   G    300.000     5000.000      1
  0.29595315E+01  -0.41899460E-03   0.15980973E-06  -0.28102717E-10   0.18673826E-14   2
  0.13659143E+05   0.30356159E+01   0.20888310E+01   0.28675912E-02   -0.41905834E-05   3
  0.22408564E-08  -0.33258749E-12   0.13836331E+05   0.72655033E+01                        4

CL+               J 6/65      CL 1.   E -1.   00 0.   00 0.   G    300.000     5000.000      1
  0.31290605E+01  -0.64678626E-03   0.25414315E-06  -0.38607442E-10   0.20947135E-14   2
  0.16543856E+06   0.24496688E+01   0.19783295E+01   0.47071709E-02   -0.86792897E-05   3
  0.63250309E-08  -0.16313361E-11   0.16562590E+06   0.77975420E+01                        4

CL-               J 6/65      CL 1.   E  1.   00 0.   00 0.   G    300.000     5000.000      1
  0.25000000E+01   0.                0.                0.                0.                   2
 -0.28874558E+05   0.41872868E+01   0.25000000E+01   0.                0.                   3
  0.                0.               -0.28874558E+05   0.41872871E+01                        4

CLCN              J 6/66      CL 1.   C  1.   N  1.   00 0.   G    300.000     5000.000      1
  0.54920021E+01   0.20987248E-02  -0.77415914E-06   0.13823882E-09   -0.92334864E-14   2
  0.14749161E+05  -0.37436171E+01   0.33390854E+01   0.10397468E-01   -0.13706650E-04   3
  0.93061962E-08  -0.25925260E-11   0.15237539E+05   0.68178759E+01                        4

CLF               J 9/65      CL 1.   F  1.   00 0.   00 0.   G    300.000     5000.000      1
  0.41550345E+01   0.43195995E-03  -0.16153995E-06   0.30453169E-10   -0.21170113E-14   2
 -0.74382198E+04   0.22303899E+01   0.28480871E+01   0.47719011E-02   -0.52877658E-05   3
  0.23634468E-08  -0.24187423E-12   -0.71277966E+04   0.87639116E+01                        4

CLF3              J 9/65      CL 1.   F  3.   00 0.   00 0.   G    300.000     5000.000      1
  0.89535967E+01   0.11722163E-02  -0.50896188E-06   0.97563489E-10   -0.[illegible]E-14   2
 -0.22075968E+05  -0.18094713E+02   0.28943119E+01   0.24718550E-01   -0.35139423E-04   3
  0.22559591E-07  -0.53261978E-11   -0.20798640E+05   0.11368534E+02                        4
```

ORIGINAL PAGE IS
OF POOR QUALITY

APPENDIX A (CONTINUED)

```
CLC                 J 6/61      CL 1.   0  1.   00 0.   00 0.   G      300.000      5000.000     1
  0.40912619E+01    0.50C031261E-03   -0.187782066E-06   0.45097671E 1   -0.262[illegible]E-14   2
  0.10853223E+05    0.36C573982E+01    0.281793364E+01   0.445313338E [illegible]   -0.441[illegible]E-05   3
  0.15920942E-08   -0.144862428E-13    0.111713978E+05   0.100448280E+02                          4

CLC2                J 3/61      CL 1.   0  2.   00 0.   00 0.   G      300.000      5000.000     1
  0.57249758E+01    0.144452301E-02   -0.599843518E-06   0.113887501E-09   -0.797947761E-14   2
  0.10606264E+05   -0.254218188E+01    0.288781466E+01   0.928750308E-02    0.760240401E-05   3
  0.63453376E-09    0.568016656E-12    0.113673778E+05   0.120068738E+02                          4

CL2                 J 9/65      CL 2.   00 0.   00 0.   G      300.000      5000.000     1
  0.43077814E+01    0.311828116E-03   -0.153130807E-06   0.445119131E-10   -0.436577753E-14   2
 -0.114582511E+04   0.205666894E+01    0.313168866E+01   0.489978777E-02   -0.694114438E-05   3
  0.447856441E-06   -0.104218559E-11   -0.109796696E+04   0.778334248E+01                          4

CL2C                J12/65      CL 2.   0  1.   00 0.   00 0.   G      300.000      5000.000     1
  0.643490621E+01   0.627288098E-03   -0.268332528E-06   0.516763940E-10   -0.356915458E-14   2
  0.848605308E+04  -0.494987678E+01    0.325452388E+01   0.127994490E-01   -0.179824608E-04   3
  0.112643838E-07   -0.255642528E-11    0.916574238E+04   0.101580581E+02                          4

CS(S)               J 6/68      CS 1.   0  0.   0  0.   0  0.   S      300.000      301.550      1
  0.                0.                0.                0.                0.                       2
  0.                0.                0.318277628E+01  -0.487089058E-02   0.188695798E-04   3
  0.895614028E-07  -0.240319428E-09   -0.962988778E+03  -0.759569808E+01                          4

CS(L)               J 6/68      CS 1.   0  0.   0  0.   0  0.   L      301.550      1500.000     1
  0.331490458E+01   0.822673498E-03   -0.456418268E-06  -0.959360378E-11   0.554716328E-13   2
 -0.701098268E+03  -0.787592648E+01    0.476968358E+01  -0.491375058E-02   0.848611098E-05   3
 -0.641843848E-08   0.185343158E-11   -0.101588928E+04  -0.149607278E+02                          4

CS                  J 6/68      CS 1.   0  0.   0  0.   0  0.   G      300.000      5000.000     1
  0.187101018E+01   0.146868718E-02   -0.106362228E-05   0.305837388E-09   -0.199772198E-13   2
  0.868145548E+04   0.102396118E+02    0.249994668E+01   0.103827928E-05   -0.387711518E-08   3
  0.492839108E-11  -0.198105428E-14    0.847378298E+04   0.686277078E+01                          4

CS+                 J 6/68      CS 1.   E -1.   0  0.   0  0.   G      300.000      5000.000     1
  0.250000008E+01   0.                0.                0.                0.                       2
  0.536537308E+05   0.616949238E+01    0.250000008E+01   0.                0.                       3
  0.                0.                0.536537308E+05   0.616949258E+01                          4

CSCL(S)             J 6/68      CS 1.   CL 1.   0  0.   0  0.   S      300.000      743.000      1
  0.                0.                0.                0.                0.                       2
  0.                0.                0.554534008E+01   0.238058348E-02   0.835703308E-06   3
 -0.995716408E-09   0.380548038E-12   -0.550265358E+05  -0.201642608E+02                          4

CSCL(S)             J 6/68      CS 1.   CL 1.   0  0.   0  0.   S      743.000      918.000      1
  0.                0.                0.                0.                0.                       2
  0.                0.                0.816107378E+01  -0.176235688E-02   -0.225085168E-06   3
  0.393073178E-08   -0.234523418E-11   -0.554804318E+05  -0.339413968E+02                          4

CSCL(L)             J 6/68      CS 1.   CL 1.   0  0.   0  0.   L      918.000      5000.000     1
  0.930974528E+01   0.                0.                0.                0.                       2
  0.550311618E+05   -0.408101338E+02   0.930974528E+01   0.                0.                       3
  0.                0.                -0.550311618E+05  -0.408101338E+02                          4

CSCL                J 6/68      CS 1.   CL 1.   0  0.   0  0.   G      300.000      5000.000     1
  0.447984558E+01   0.105491648E-03   -0.399899148E-08   0.206419958E-12   0.221846408E-16   2
 -0.302358098E+05   0.520415658E+01    0.418230308E+01   0.137595538E-02   -0.205869338E-05   3
  0.148364748E-08   -0.397645468E-12   -0.301779278E+05   0.662532738E+01                          4

CSF(S)              J 6/68      CS 1.   F 1.   0  0.   0  0.   S      300.000      976.000      1
  0.                0.                0.                0.                0.                       2
  0.                0.                0.564899938E+01   0.187113988E-02   0.662423828E-06   3
 -0.630848718E-09   0.186923398E-12   -0.684851028E+05  -0.221499598E+02                          4

CSF(L)              J 6/68      CS 1.   F 1.   0  0.   0  0.   L      976.000      5000.000     1
  0.890716178E+01   0.                0.                0.                0.                       2
 -0.680668178E+05   -0.399127748E+02   0.890716178E+01   0.                0.                       3
  0.                0.                -0.680668178E+05  -0.399127748E+02                          4

CSF                 J 6/68      CS 1.   F 1.   0  0.   0  0.   G      300.000      5000.000     1
  0.443733308E+01   0.127150008E-03   -0.206476508E-07   0.298133578E-11   -0.147742458E-15   2
 -0.442279958E+05   0.386039258E+01    0.374498798E+01   0.301005168E-02   -0.458838168E-05   3
  0.321796948E-08   -0.837860178E-12   -0.440906968E+05   0.718170988E+01                          4

CSC                 J12/68      CS 1.   0  1.   0  0.   0  0.   G      300.000      5000.000     1
  0.446607828E+01   0.115632328E-03   -0.599891878E-08   0.131766998E-12   0.576397458E-16   2
  0.619503098E+04   0.420138448E+01    0.398574198E+01   0.212792618E-02   -0.321762458E-05   3
  0.227642958E-08   -0.597219778E-12    0.628989408E+04   0.756285938E+01                          4
```

ORIGINAL PAGE IS
OF POOR QUALITY

```
CS2                J 6/68      CS 2.   0  0.   0  0.   0  0.   G        300.000        5000.000      1
     0.46411470E+01      0.10844908E-03      0.10701307E-08      0.55978765E-10      -0.77477416E-14   2
     0.11367604E+05      0.76209661E+01      0.49116580E+01      0.17492705E-03      0.63486566E-06    3
    -0.41459947E-09      0.16398515E-12      0.11426704E+05      0.83824693E+01                        4

CS2CL2             J 6/68      CS 2.   CL 2.   0  0.   0  0.   G        300.000        5000.000      1
     0.99424375E+01      0.62459303E-04     -0.26331097E-07      0.48912142E-11      0.31556121E-15   2
    -0.93365855E+05     -0.10611221E+02      0.92952642E+01      0.28505600E-02     -0.45576019E-05   3
     0.32557731E-08     -0.86667362E-12     -0.92222862E+05     -0.75315139E+01                        4

CS2F2              J 6/69      CS 2.   F  2.   0  0.   0  0.   G        300.000        5000.000      1
     0.94731725E+01      0.12474829E-03     -0.50305253E-07      0.97711762E-11      -0.58009770E-15   2
    -0.11095057E+06     -0.14067985E+02      0.84425561E+01      0.54921001E-02      0.10842757E-04    3
     0.91771054E-08     -0.23173978E-11     -0.10978165E+06     -0.72614081E+01                        4

CS2C               J12/68      CS 2.   0  1.   0  0.   0  0.   G        300.000        5000.000      1
     0.69377467E+01      0.10165098E-03     -0.38062062E-07      0.61466393E-11      -0.35758216E-15   2
    -0.11649989E+05     -0.11790402E+01      0.57553639E+01      0.49116073E-02      -0.77972518E-05   3
     0.54156957E-08     -0.14580898E-11     -0.12946829E+05      0.42869913E+01                        4

E                  L02/67      E  1.   0  0.   0  0.   0  0.   G        300.000        5000.000      1
     0.25000000E+01      0.                  0.                  0.                  0.                2
    -0.74537496E+03     -0.11734026E+02      0.25000000E+01      0.                  0.                3
     0.                  0.                 -0.74537500E+03     -0.11734026E+02                        4

F                  J 9/65      F  1.   00 0.   00 0.   00 0.   G        300.000        5000.000      1
     0.27004353E+01     -0.22291182E-03      0.97941385E-07     -0.19123038E-10      0.13768154E-14   2
     0.87163617E+04      0.38667182E+01      0.28128740E+01     -0.33023098E-05     -0.12497313E-05   3
     0.16837365E-08     -0.66587833E-12      0.86604019E+04      0.30984198E+01                        4

F-                 J 6/65      F  1.   E  1.   00 0.   CG 0.   G        300.000        5000.000      1
     0.25000000E+01      0.                  0.                  0.                  0.                2
    -0.32044752E+05      0.32514845E+01      0.25000000E+01      0.                  0.                3
     0.                  0.                 -0.32044752E+05      0.32514846E+01                        4

FCN                J 6/69      F  1.   C  1.   N  1.   0  0.   G        300.000        5000.000      1
     0.50838557E+01      0.24173684E-02     -0.97682766E-06      0.17813442E-09     -0.12119567E-13   2
     0.25710781E+04     -0.28859455E+01      0.32516941E+01      0.83073144E-02     -0.93666358E-05   3
     0.44126644E-08     -0.90882423E-12      0.30551198E+04      0.64289832E+01                        4

FC                 J12/66      F  1.   C  1.   CO 0.   CO 0.   G        300.000        5000.000      1
     0.39192774E+01      0.70442345E-03     -0.26648204E-06      0.49617599E-10     -0.33688571E-14   2
     0.11798193E+05      0.33155951E+01      0.29680024E+01      0.26483393E-02     -0.47368025E-06   3
    -0.13006225E-08      0.10614283E-11      0.12087846E+05      0.83803342E+01                        4

FC2                J 9/66      F  1.   C  2.   00 0.   00 0.   G        300.000        5000.000      1
     0.57040935E+01      0.13662889E-02     -0.58355374E-06      0.10937214E-09     -0.75869116E-14   2
    -0.39478678E+03     -0.20810805E+01      0.37805073E+01      0.68174595E-02     -0.58133605E-05   3
     0.17562504E-08      0.67757430E-13      0.12769468E+03      0.78225198E+01                        4

F2                 J12/60      F  2.   0  0.   0  0.   0  0.   G        300.000        5000.000      1
     0.40397806E+01      0.60869035E-03     -0.21494672E-06      0.40596803E-10     -0.28294423E-14   2
    -0.13123536E+04      0.99528039E+00      0.28445997E+01      0.40135072E-02     -0.32165655E-05   3
     0.47418780E-09      0.35556237E-12     -0.99911761E+03      0.71131622E+01                        4

F2C                J12/69      F  2.   C  1.   0  0.   0  0.   G        300.000        5000.000      1
     0.50951871E+01      0.11028402E-02     -0.47547937E-06      0.96683145E-10     -0.63757098E-14   2
     0.91936065E+03     -0.52352686E+01      0.26109219E+01      0.12231280E-01     -0.13441415E-04   3
     0.54909412E-08     -0.57487175E-12      0.17347196E+04      0.11774719E+02                        4

FE(S)              J 3/65      FE 1.   00 0.   00 0.   00 0.   S        300.000        1184.000      1
     0.43283341E+02     -0.25054769E-01     -0.24866004E-04      0.11749263E-07      0.47159221E-11   2
    -0.23310190E+05     -0.23775825E+03      0.32514004E+01     -0.72791647E-02      0.34254159E-04   3
     0.49586132E-07      0.26187444E-10     -0.83324322E+03     -0.14209130E+02                        4

FE(S)              J 3/65      FE 1.   00 0.   00 0.   00 0.   S       1184.000        1665.000      1
     0.32005394E+01      0.75484421E-03      0.                  0.                  0.                2
    -0.17210443E+03     -0.14410926E+02      0.                  0.                  0.                3
     0.                  0.                  0.                  0.                                    4

FE(S)              J 3/65      FE 1.   00 0.   00 0.   00 0.   S       1665.000        1809.000      1
     0.34018312E+01      0.90581305E-03      0.                  0.                  0.                2
    -0.58567541E+03     -0.16076804E+02      0.                  0.                  0.                3
     0.                  0.                  0.                  0.                                    4

FE(L)              J 3/65      FE 1.   00 0.   00 0.   00 0.   L       1809.000        5000.000      1
     0.49215842E+01      0.20129179E-03      0.                  0.                  0.                2
    -0.15541952E+03     -0.25191480E+02      0.                  0.                  0.                3
     0.                  0.                  0.                  0.                                    4
```

```
FE                J 3/65      FE 1.   CO 0.   00 0.   00 0.   G        300.000        5000.000        1
     0.34434538E+01      -0.14611625E-02      0.81291351E-06     -0.16290473E-09      0.12259868E-13   2
     0.49122684E+05       0.25061140E+01      0.26358458E+01      0.47581262E-02     -0.99073755E-05   3
     0.90994257E-08      -0.28812674E-11      0.49187400E+05      0.49230484E+01                       4

FECL              J 6/65      FE 1.   CL 1.   00 0.   00 0.   G        300.000        5000.000        1
     0.46942669E+01       0.11604078E-03     -0.20840175E-07     -0.17626556E-11      0.52313814E-15   2
     0.28790344E+05       0.41903970E+01      0.37885826E+01      0.43678011E-02     -0.46922328E-05   3
     0.41707454E-06      -0.84686773E-12      0.28920097E+05      0.83402095E+01                       4

FECL2(S)          J 6/65      FE 1.   CL 2.   00 0.   00 0.   S        300.000         950.000        1
     0.                   0.                   0.                   0.                   0.             2
     0.                   0.                   0.71307661E+01      0.10951018E-01     -0.16731228E-04   3
     0.13155866E-07      -0.40611518E-11     -0.43600855E+05     -0.29072053E+02                       4

FECL2(L)          J 6/65      FE 1.   CL 2.   00 0.   00 0.   L        950.000        5000.000        1
     0.12288276E+02       0.                   0.                   0.                   0.             2
    -0.41107855E+05      -0.53190515E+02      0.12288276E+02      0.                   0.             3
     0.                   0.                  -0.41107855E+05     -0.53190515E+02                       4

FECL2             J 6/65      FE 1.   CL 2.   00 0.   00 0.   G        300.000        5000.000        1
     0.79569177E+01      -0.10430791E-03      0.49393893E-07     -0.16106570E-10      0.16168262E-14   2
    -0.20226258E+05      -0.10752118E+02      0.38434440E+01      0.21564945E-01     -0.39937576E-04   3
     0.31321714E-07      -0.89656091E-11     -0.19671549E+05      0.77677010E+01                       4

FECL3(S)          J 6/65      FE 1.   CL 3.   00 0.   00 0.   S        300.000         577.000        1
     0.                   0.                   0.                   0.                   0.             2
     0.                   0.                   0.11806993E+02      0.18280683E-01     -0.19156683E-03   3
     0.57778464E-06      -0.49460664E-09     -0.51600498E+05     -0.51237249E+02                       4

FECL3(L)          J 6/65      FE 1.   CL 3.   00 0.   00 0.   L        577.000        1500.000        1
     0.16102574E+02       0.                   0.                   0.                   0.             2
    -0.48435533E+05      -0.67614581E+02      0.16102574E+02      0.                   0.             3
     0.                   0.                  -0.48435533E+05     -0.67614581E+02                       4

FECL3             J 6/65      FE 1.   CL 3.   00 0.   00 0.   G        300.000        5000.000        1
     0.97771106E+01       0.24421362E-03     -0.10313994E-06      0.19207426E-10     -0.13179224E-14   2
    -0.33439570E+05      -0.14562301E+02      0.75614873E+01      0.97338249E-02     -0.15543305E-04   3
     0.11185368E-07      -0.30822998E-11     -0.33013624E+05     -0.39989867E+01                       4

FEC(S)            J 6/65      FE 1.   O  1.   00 0.   00 0.   S        300.000        1650.000        1
     0.58316489E+01       0.14275156E-02     -0.93208143E-07     -0.65997763E-11     -0.22512143E-13   2
    -0.34566902E+05      -0.26446930E+02      0.53195475E+01      0.22094591E-02      0.10721775E-05   3
    -0.27929729E-08       0.13326733E-11     -0.34407165E+05     -0.23686034E+02                       4

FEC(L)            J 6/65      FE 1.   O  1.   00 0.   00 0.   L       1650.000        5000.000        1
     0.82027482E+01       0.                   0.                   0.                   0.             2
    -0.33848615E+05      -0.40779129E+02      0.                   0.                   0.             3
     0.                   0.                   0.                   0.                                  4

FEO               J 9/66      FE 1.   O  1.   00 0.   00 0.   G        300.000        5000.000        1
     0.42049817E+01       0.26838452E-03     -0.89426736E-07      0.31855911E-10     -0.33922543E-14   2
     0.28029170E+05       0.48172686E+01      0.28245256E+01      0.43049707E-02     -0.41084791E-05   3
     0.13201189E-08       0.71316217E-13      0.29194035E+05      0.11879013E+02                       4

FEO2H2(S)         J 6/66      FE 1.   O  2.   H  2.   00 0.   S        300.000        1500.000        1
     0.74031808E+01       0.11981742E-01     -0.14957611E-05     -0.50526359E-08      0.20037111E-11   2
    -0.71592266E+05      -0.34673267E+02      0.10091218E+02      0.44523141E-02      0.40666855E-05   3
    -0.40094525E-08       0.23947164E-12     -0.72277608E+05     -0.48460034E+02                       4

FEO2H2            J12/66      FE 1.   O  2.   H  2.   00 0.   S        300.000        5000.000        1
     0.87960421E+01       0.45844405E-02     -0.18808771E-05      0.34177402E-09     -0.23047931E-13   2
    -0.42754562E+05      -0.17856573E+02      0.14918172E+01      0.38499265E-01     -0.61500956E-04   3
     0.46635112E-07      -0.13306872E-10     -0.61450948E+05      0.16384301E+02                       4

FEO3H3(S)         J 6/66      FE 1.   O  3.   H  3.   00 0.   S        300.000        1500.000        1
     0.80223926E+01       0.16420135E-01     -0.12369378E-06     -0.68192838E-08      0.23276907E-11   2
    -0.10321336E+06      -0.37934020E+02      0.44116836E+01      0.32682462E-01     -0.22393815E-04   3
     0.28646792E-08       0.22622321E-11     -0.10271834E+06     -0.21331014E+02                       4

FE2O3(S)          J 6/65      FE 2.   O  3.   O  0.   O  0.   S        300.000        2500.000        1
     0.40497530E+02      -0.46131596E-01      0.31826406E-04     -0.49226331E-08      0.84655417E-12   2
    -0.11317626E+06      -0.21639088E+03     -0.77037843E+01      0.13647471E+00     -0.32905655E-03   3
     0.38150478E-06      -0.16312285E-09     -0.10080076E+06      0.25292085E+02                       4

FE3O4(S)          J 6/65      FE 3.   O  4.   O  0.   O  0.   S        300.000        5000.000        1
     0.24133720E+02       0.41592226E-04     -0.26331492E-07      0.66035094E-11     -0.56924601E-15   2
    -0.14171052E+06      -0.12066412E+03      0.36198147E+02     -0.17437976E+00      0.52475673E-03   3
    -0.54238219E-06       0.17596202E-09     -0.14138730E+06     -0.15556683E+03                       4
```

APPENDIX A (CONTINUED)

```
H                 J 9/65      H  1.   00 0.   00 0.   00 0.   G        300.000        5000.000          1
  0.25000000E+01   0.                          0.                  0.                  0.               2
  0.25471627E+05  -0.46011763E+00              0.25000000E+01      0.                  0.               3
  0.                0.                         0.25471627E+05     -0.46011762E+00                       4

H+                J 6/66      H  1.   E -1.   00 0.   00 0.   G        300.000        5000.000          1
  0.25000000E+01   0.                          0.                  0.                  0.               2
  0.18403344E+06  -0.11538620E+01              0.25000000E+01      0.                  0.               3
  0.                0.                         0.18403344E+06     -0.11538621E+01                       4

H-                J 9/65      H  1.   E  1.   00 0.   00 0.   G        300.000        5000.000          1
  0.25000000E+01   0.                          0.                  0.                  0.               2
  0.15961045E+05  -0.11524488E+01              0.25000000E+01      0.                  0.               3
  0.                0.                         0.15961045E+05     -0.11524486E+01                       4

HALC              J 3/64      H  1.   AL 1.   C  1.   CC 0.   G        300.000        5000.000          1
  0.48556053E+01   0.28598933E-02             -0.12152821E-05      0.22064419E-09     -0.16047592E-13   2
  0.21454053E+04  -0.32954978E+01              0.18980220E+01      0.27763784E-02      0.15224672E-05   3
 -0.86530734E-08   0.41700380E-11              0.31156301E+04      0.12763795E+02                       4

HBC               J12/64      H  1.   B  1.   C  1.   00 0.   G        300.000        5000.000          1
  0.35902785E+01   0.35116761E-02             -0.14167746E-05      0.25804765E-09     -0.17537752E-13   2
 -0.11539403E+05   0.41315742E+00              0.27000640E+01      0.67021406E-02     -0.48161165E-05   3
  0.21375092E-08  -0.48790703E-12             -0.11132099E+05      0.72359559E+01                       4

HBC+              J 6/68      H  1.   B  1.   C  1.   E -1.   G        300.000        5000.000          1
  0.44547347E+01   0.31428614E-02             -0.12961293E-05      0.23975605E-09     -0.16190748E-13   2
  0.16694872E+06  -0.60143149E+00              0.29796548E+01      0.61956382E-02     -0.29940031E-05   3
  0.13452306E-09   0.20681907E-12              0.16744444E+06      0.73616124E+01                       4

HBC2              J12/64      H  1.   B  1.   C  2.   00 0.   G        300.000        5000.000          1
  0.47389519E+01   0.47718771E-02             -0.18063494E-05      0.31472889E-09     -0.20739312E-13   2
 -0.64248838E+05  -0.33346713E-02              0.28707866E+01      0.78862644E-02     -0.40736342E-06   3
 -0.47059022E-08   0.23548893E-11             -0.68624111E+05      0.10167320E+02                       4

HCL               J 9/64      H  1.   CL 1.   00 0.   00 0.   G        300.000        5000.000          1
  0.27665884E+01   0.14381883E-02             -0.46993000E-06      0.73497408E-10     -0.43731106E-14   2
 -0.11917468E+05   0.64583540E+01              0.35248171E+01      0.29984862E-04     -0.86221631E-06   3
  0.21079721E-08  -0.98458191E-12             -0.12150509E+05      0.23957713E+01                       4

HCN               C00CCC      H  1.   C  1.   N  1.   0  0.   G        300.000        5000.000          1
  0.37068121E+01   0.33382803E-02             -0.11913320E-05      0.19992917E-09     -0.12826452E-13   2
  0.14962636E+05   0.20794904E+01              0.24513556E+01      0.87209371E-02     -0.10094203E-04   3
  0.67255698E-08  -0.17626959E-11              0.15213002E+05      0.46830065E+01                       4

HCC               J 3/61      H  1.   C  1.   C  1.   00 0.   G        300.000        5000.000          1
  0.33366720E+01   0.33912031E-02             -0.12957629E-05      0.22679230E-09     -0.14952372E-13   2
 -0.26430557E+04   0.69479829E+01              0.37929190E+01     -0.47861919E-04      0.57306920E-05   3
 -0.54606603E-08   0.16288628E-11             -0.26288218E+04      0.52070412E+01                       4

HCC+              J 6/66      H  1.   C  1.   C  1.   E -1.   G        300.000        5000.000          1
  0.37043170E+01   0.31689482E-02             -0.11162077E-05      0.18295528E-09     -0.11423033E-13   2
  0.13159937E+06   0.22646685E+01              0.24008375E+01      0.94708997E-02     -0.12329029E-04   3
  0.87865750E-08  -0.24046919E-11              0.10181650E+06      0.83015949E+01                       4

HCP               J12/69      H  1.   C  1.   P  1.   0  0.   G        300.000        5000.000          1
  0.44720009E+01   0.26742145E-02             -0.97089571E-06      0.15708386E-09     -0.38457131E-14   2
  0.18558085E+05  -0.68781356E+00              0.21111132E+01      0.10707664E-01     -0.10801743E-04   3
  0.49036970E-08  -0.59717249E-12              0.19110209E+05      0.11067474E+02                       4

HF                J12/68      H  1.   F  1.   0  0.   0  0.   G        300.000        5000.000          1
  0.30019188E+01   0.69528935E-03             -0.56135180E-07     -0.14767711E-10      0.22140435E-14   2
 -0.33624997E+05   0.37575068E+01              0.34659720E+01      0.33246861E-03     -0.10063786E-05   3
  0.12078301E-08  -0.37137269E-12             -0.33821824E+05      0.10758272E+01                       4

HNC               J 3/63      H  1.   N  1.   C  1.   0  0.   G        300.000        5000.000          1
  0.35548619E+01   0.32713182E-02             -0.12734071E-05      0.22602046E-09     -0.15064827E-13   2
  0.12693734E+05   0.51684901E+01              0.37412008E+01     -0.20067061E-03      0.75409100E-05   3
 -0.77105713E-08   0.25928389E-11              0.10817845E+05      0.50063473E+01                       4

HC2               J 3/64      H  1.   C  2.   00 0.   00 0.   G        300.000        5000.000          1
  0.37866280E+01   0.27885404E-02             -0.10168708E-05      0.17183944E-09     -0.11021852E-13   2
  0.11888500E+04   0.48147611E+01              0.35094850E+01      0.11499670E-02      0.58784259E-05   3
 -0.77795519E-08   0.29607083E-11              0.13803331E+04      0.68276325E+01                       4

H2                J 3/61      H  2.   0  0.   0  0.   0  0.   G        300.000        5000.000          1
  0.31001901E+01   0.51119464E-03              0.52644210E-07     -0.34909973E-10      0.36945345E-14   2
 -0.87738042E+03  -0.19629421E+01              0.30574451E+01      0.26765200E-02     -0.58099162E-05   3
  0.55210391E-08  -0.18122739E-11             -0.98890474E+03     -0.22997056E+01                       4
```

ORIGINAL PAGE IS
OF POOR QUALITY

APPENDIX A (CONTINUED)

```
H2C(S)              L11/65      H  2.   0  1.   00 0.   00 0.   S        200.000        273.150        1
     0.                     0.                  0.                  0.                  0.                2
     0.                     0.                  -0.39269330E-01     0.16920420E-01      0.                3
     0.                     0.                  -0.35949581E+05     0.56933784E+00                        4

H2C(L)              L11/65      H  2.   0  1.   00 0.   00 0.   L        273.150        373.150        1
     0.                     0.                  0.                  0.                  0.                2
     0.                     0.                  0.12712782E+02      -0.17662790E-01     -0.22456641E-04   3
     0.20020908E-06         -0.24078614E-09     -0.37463200E+05     -0.59115345E+02                       4

H2C                 J 3/61      H  2.   0  1.   00 0.   00 0.   G        300.000        5000.000       1
     0.27167633E+01         0.29451374E-02      -0.80224374E-06     0.10275682E-09      -0.48472145E-14   2
     -0.29905826E+05        0.66305671E+01      0.40701275E+01      -0.11084499E-02     0.41521180E-05    3
     -0.29637404E-08        0.80702103E-12      -0.30279722E+05     -0.32270046E+00                       4

H2C2                L 2/69      H  2.   0  2.   0  0.   0  0.   G        300.000        5000.000       1
     0.45731667E+01         0.43361363E-02      -0.14746888E-05     0.23489037E-09      -0.14316536E-13   2
     -0.18006961E+05        0.50113696E+00      0.33887536E+01      0.65692260E-02      -0.14859126E-06   3
     -0.46258055E-08        0.24715147E-11      -0.17663147E+05     0.67853631E+01                        4

H2S                 J12/65      H  2.   S  1.   00 0.   00 0.   G        300.000        5000.000       1
     0.28479103E+01         0.38415990E-02      -0.14099367E-05     0.24278754E-09      -0.15784283E-13   2
     -0.34469788E+04        0.74781412E+01      0.38811293E+01      -0.13211856E-03     0.36517726E-05    3
     -0.21820445E-08        0.28783779E-12      -0.36350917E+04     0.25161511E+01                        4

H3B3C6              J12/64      H  3.   B  3.   0  6.   00 0.   G        300.000        5000.000       1
     0.20153579E+02         0.13016286E-01      -0.50669619E-05     0.90308253E-09      -0.6053241 0E-13  2
     -0.28104092E+06        -0.79789531E+02     -0.22705116E+01     0.87024894E-01      -0.91587714E-04   3
     0.39445392E-07         -0.36666035E-11     -0.27569523E+06     0.32516454E+02                        4

HE                  L 5/66      HE 1.   00 0.   00 0.   00 0.   G        300.000        5000.000       1
     0.25000000E+01         0.                  0.                  0.                  0.                2
     -0.74537498E+03        0.91534888E+00      0.25000000E+01      0.                  0.                3
     0.                     0.                  -0.74537498E+03     0.91534884E+00                        4

HE+                 L12/66      HE 1.   E -1.   00 0.   00 0.   G        300.000        5000.000       1
     0.25000000E+01         0.                  0.                  0.                  0.                2
     0.28534266E+06         0.16084045E+01      0.25000000E+01      0.                  0.                3
     0.                     0.                  0.28534266E+06      0.16084046E+01                        4

K(S)                J12/61      K  1.   0  0.   0  0.   0  0.   S        300.000        336.350        1
     0.                     0.                  0.                  0.                  0.                2
     0.                     0.                  0.17263229E+01      -0.98042772E-04     0.13852978E-04    3
     0.57915802E-07         -0.11734935E-09     -0.69166994E+03     -0.29234372E+01                       4

K(L)                J12/61      K  1.   0  0.   0  0.   0  0.   L        336.350        2000.000       1
     0.32625048E+01         -0.13113792E-03     0.50811991E-06      0.62810507E-10      -0.51130459E-13   2
     -0.52525237E+03        -0.96602325E+01     0.44202110E+01      -0.19475966E-02     0.61695016E-06    3
     0.89816043E-09         -0.33655804E-12     -0.96275784E+03     -0.16042433E+02                       4

K                   J 6/62      K  1.   00 0.   00 0.   00 0.   G        300.000        5000.000       1
     0.25673650E+01         -0.14933596E-03     0.12342444E-06      -0.53394240E-10     0.11348426E-13    2
     0.99550531E+04         0.46642081E+01      0.24930967E+01      0.50164177E-04      -0.12751224E-06   3
     0.13540491E-09         -0.51145936E-13     0.99786360E+04      0.50560438E+01                        4

K+                  J 3/65      K  1.   E -1.   00 0.   00 0.   G        300.000        5000.000       1
     0.25000000E+01         0.                  0.                  0.                  0.                2
     0.61096558E+05         0.43339455E+01      0.25000000E+01      0.                  0.                3
     0.                     0.                  0.61096558E+05      0.43339455E+01                        4

KCL(S)              J 3/66      K  1.   CL 1.   00 0.   00 0.   S        300.000        1044.000       1
     0.39157169E+01         -0.20927271E-02     0.47310182E-05      0.70152537E-08      -0.55146098E-11   2
     -0.57747066E+05        -0.10144800E+02     0.53934311E+01      0.26535242E-02      0.96075655E-06    3
     -0.50251843E-08        0.40721228E-11      -0.54248389E+05     -0.21596814E+02                       4

KCL(L)              J 3/66      K  1.   CL 1.   00 0.   00 0.   L        1044.000       5000.000       1
     0.89518064E+01         0.                  0.                  0.                  0.                2
     -0.53369478E+05        -0.40010059E+02     0.                  0.                  0.                3
     0.                     0.                  0.                  0.                                    4

KCL                 J 3/66      K  1.   CL 1.   00 0.   00 0.   G        300.000        5000.000       1
     0.44636733E+01         0.12229207E-03      -0.91719210E-08     0.92648242E-12      -0.10407917E-16   2
     -0.27173133E+05        0.32349330E+01      0.39908569E+01      0.21089169E-02      -0.31836530E-05   3
     0.22525308E-08         -0.59094179E-12     -0.27080184E+05     0.54988475E+01                        4

KF(S)               J 6/69      K  1.   F  1.   0  0.   0  0.   S        300.000        1131.000       1
     0.94627782E+01         -0.64057512E-02     0.63913262E-07      0.75949589E-08      -0.33598104E-11   2
     -0.71249107E+05        -0.44831804E+02     0.49843972E+01      0.35943190E-02      -0.17696401E-05   3
     -0.48106141E-09        0.10280730E-11      -0.70018149E+05     -0.21384504E+02                       4
```

APPENDIX A (CONTINUED)

ORIGINAL PAGE IS OF POOR QUALITY

```
KF(L)                J 6/69      K  1.   F  1.   G  0.   0  0.   L        1151.000        [illegible]        1
     0.86555469E+01      0.                  0.                    0.                  0.                 2
    -0.49260025E+05     -0.41179932E+02      0.                    0.                  0.                 3
     0.                  0.                  0.                    0.                                     4

KF                   J 6/69      K  1.   F  1.   0  0.   0  0.   G         300.000        5000.000           1
     0.44049700E+01      0.17833725E-03     -0.34093797E-07        [illegible]         [illegible]        2
    -0.40655489E+05      0.20179327E+01      0.35156066E+01        [illegible]         [illegible]        3
     0.37751438E-08     -0.93624210E-12     -0.40476079E+05        0.63[illegible]                        4

KF2-                 J12/68      K  1.   F  2.   E  1.   0  0.   G         300.000        5000.000           1
     0.72581638E+01      0.26703557E-03     -0.11384630E-06        0.21407485E-10     -0.14827070E-14    2
    -0.85780839E+05     -0.10116452E+02      0.52507573E+01        0.46383718E-02     -0.13403673E-04    3
     0.94140832E-08     -0.24682602E-11     -0.85383971E+05       -0.49039940E+00                        4

K2F2                 J 6/69      K  2.   F  2.   0  0.   0  0.   G         300.000        5000.000           1
     0.98148096E+01      0.20453081E-03     -0.87071665E-07        0.14337227E-10      0.11287256E-14    2
    -0.19675987E+06     -0.17654966E+02      0.78329504E+01        0.49240831E-02     -0.14719852E-04    3
     0.10982469E-07     -0.30721720E-11     -0.10638752E+06       -0.82555457E+01                        4

KC                   J12/62      K  1.   0  1.   00 0.   00 0.   G         300.000        5000.000           1
     0.43731489E+01      0.19960449E-03     -0.56826345E-07        0.10410356E-10     -0.70291368E-15    2
     0.37491801E+04      0.32551045E+01      0.33805136E+01        0.41932012E-02     -0.61238894E-05    3
     0.40675370E-08     -0.99172754E-12      0.39512947E+04        0.80473015E+01                        4

KCH                  J 3/66      K  1.   0  1.   H  1.   0  0.   G         300.000        5000.000           1
     0.44936925E+01      0.18921754E-02     -0.60744056E-06        0.91272104E-10     -0.52437866E-14    2
    -0.29344726E+05      0.31689124E+01      0.38552640E+01        0.38491841E-02     -0.22103929E-05    3
    -0.65575545E-10      0.45597597E-12     -0.29196850E+05        0.63704649E+01                        4

KOH(S)               J 3/66      K  1.   0  1.   H  1.   0  0.   S         300.000         673.000           1
     0.                  0.                  0.                    0.                  0.                 2
     0.                  0.                  0.20119300E+01        0.34534508E-01     -0.74208084E-04    3
     0.21439661E-06     -0.18755567E-09     -0.52334762E+05       -0.88766954E+01                        4

KOH(L)               J 3/66      K  1.   0  1.   H  1.   0  0.   L         673.000        5000.000           1
     0.99941373E+01      0.                  0.                    0.                  0.                 2
    -0.52514199E+05     -0.45107668E+02      0.99941373E+01        0.                  0.                 3
     0.                  0.                 -0.52514199E+05       -0.45107668E+02                        4

K2                   J12/61      K  2.   00 0.   00 0.   00 0.   G         300.000        5000.000           1
     0.45089995E+01      0.22596406E-03      0.14957172E-07       -0.38811532E-11      0.34052376E-15    2
     0.13926067E+05      0.42568563E+01      0.44424903E+01        0.46158726E-03     -0.30025595E-06    3
     0.17502910E-09     -0.32470554E-13      0.13941670E+05        0.45868357E+01                        4

K2O(S)               J 6/63      K  2.   0  1.   00 0.   00 0.   S         300.000        2000.000           1
     0.86890737E+01      0.51097498E-02     -0.20386508E-06        0.58747271E-10     -0.10499823E-14    2
    -0.46449235E+05     -0.39589233E+02      0.34449681E+01        0.40567031E-01     -0.82051685E-04    3
     0.74006086E-07     -0.27313775E-10     -0.45925458E+05       -0.17385210E+02                        4

LI(S)                J 6/62      LI 1.   0  0.   0  0.   0  0.   S         300.000         453.690           1
     0.                  0.                  0.                    0.                  0.                 2
     0.                  0.                  0.91818617E+01       -0.35993310E-01      0.24881854E-05    3
     0.26456527E-06     -0.34331039E-09     -0.15189533E+04       -0.39845854E+02                        4

LI(L)                J 6/62      LI 1.   0  0.   0  0.   0  0.   L         453.690        4000.000           1
     0.36114162E+01     -0.18325283E-03      0.40743757E-07        0.26515630E-11     -0.11572503E-14    2
    -0.74925732E+03     -0.16352732E+02      0.38988094E+01        0.61335444E-03     -0.48307646E-05    3
     0.61290368E-08     -0.23400340E-11     -0.87493882E+03       -0.18156235E+02                        4

LI                   J 6/62      LI 1.   00 0.   00 0.   00 0.   G         300.000        5000.000           1
     0.24737689E+01      0.87435341E-04     -0.90773573E-07        0.31327924E-10     -0.17579958E-14    2
     0.18588036E+05      0.25630288E+01      0.25103738E+01       -0.76235730E-04      0.18612567E-06    3
    -0.19540847E-09      0.73145266E-13      0.18581670E+05        0.23902453E+01                        4

LI+                  J 3/65      LI 1.   E -1.   00 0.   00 0.   G         300.000        5000.000           1
     0.25000000E+01      0.                  0.                    0.                  0.                 2
     0.81899068E+05      0.17406170E+01      0.25000000E+01        0.                  0.                 3
     0.                  0.                  0.81899068E+05        0.17406170E+01                         4

LICL(S)              J 6/62      LI 1.   CL 1.   00 0.   00 0.   S         300.000         883.000           1
     0.                  0.                  0.                    0.                  0.                 2
     0.                  0.                  0.41095245E+01        0.81981003E-02     -0.11541874E-04    3
     0.10585386E-07     -0.36457022E-11     -0.50608266E+05       -0.18298894E+02                        4

LICL(L)              J 6/62      LI 1.   CL 1.   00 0.   00 0.   L         883.000        2000.000           1
     0.82149477E+01      0.56391361E-03     -0.17350331E-05        0.76595008E-09     -0.12178477E-12    2
    -0.59007722E+05     -0.38608961E+02      0.10383028E+02       -0.47174699E-02     -0.16148317E-05    3
     0.83807174E-08     -0.44459493E-11     -0.50539120E+05       -0.49921360E+02                        4
```

ORIGINAL PAGE IS
OF POOR QUALITY

APPENDIX A (CONTINUED)

```
LICL                J 6/62      LI 1.   CL 1.   00 0.   00 0.   G      300.000      5000.000
     0.42712143E+01            0.31400291E-03  -0.10123130E-06  0.18451853E-13  -0.12399771E-14
    -0.24884442E+05            0.10285672E+01   0.29906906E+01  0.50338642E-02   0.65471777E-05
     0.34050160E-08           -0.76117455E-12  -0.24603182E+05  0.73150121E+01

LIF(S)              J12/68      LI 1.   F  1.   0  0.   0  0.   S      300.000      1121.300
     0.55405738E+01           -0.13421080E-03   0.17825606E-05  0.48179444E-09  -0.31296654E-12
    -0.75900345E+05            -0.27447276E+02   0.17694325E+01  0.17509224E-01  -0.28038751E-04
     0.22093485E-07            -0.69633658E-11  -0.75299278E+05  -0.99474056E+01

LIF(L)              J12/68      LI 1.   F  1.   0  0.   0  0.   L      1121.300      5000.000
     0.77195401E+01            0.                0.                0.                0.
    -0.74304347E+05           -0.38815487E+02    0.                0.                0.
     0.                        0.                0.                0.                0.

LIF                 J12/68      LI 1.   F  1.   0  0.   0  0.   G      300.000      5000.000
     0.40439248E+01            0.57041054E-03  -0.21454144E-06  0.40400013E-10  -0.28357920E-14
    -0.42299318E+05            0.68453211E+00   0.28528869E+01  0.39532781E-02  -0.31724985E-05
     0.43264397E-09            0.37055667E-12  -0.41987265E+05  0.67778655E+01

LIF2-               J12/68      LI 1.   F  2.   E  1.   0  0.   G      300.000      5000.000
     0.63448590E+01            0.12571272E-02  -0.53522830E-06  0.10113025E-04  -0.70581744E-14
    -0.87667890E+05            -0.93115842E+01   0.34718136E+01  0.10636713E-01  -0.11777646E-04
     0.56765487E-08            -0.84659840E-12  -0.86963111E+05  0.51277466E+01

LIFC                J 9/65      LI 1.   F  1.   0  1.   00 0.   G      300.000      5000.000
     0.59926109E+01            0.11139260E-02  -0.47888493E-06  0.91068332E-10  -0.63849123E-14
    -0.11100989E+05            -0.53497665E+01   0.25001790E+01  0.12661717E-01  -0.14157569E-04
     0.64506374E-06            -0.74261431E-12  -0.12265534E+05  0.12130855E+02

LIH(S)              J 9/67      LI 1.   H  1.   00 0.   00 0.   S      300.000      961.800
     0.                        0.                0.                0.                0.
     0.                        0.                0.                0.                0.
     0.56311555E-08            -0.12693483E-11   0.38611812E+00  0.12127957E-01  -0.86900336E-05
                                                 -0.11486991E+05  -0.30654575E+01

LIH(L)              J 9/67      LI 1.   H  1.   00 0.   00 0.   L      961.800      5000.000
     0.74981191E+01            0.                0.                0.                0.
    -0.11581826E+05            -0.40047278E+02    0.                0.                0.
     0.                        0.                0.74981191E+01  -0.40047278E+02
                                                 -0.11581826E+05

LIH                 J 9/67      LI 1.   H  1.   00 0.   00 0.   G      300.000      5000.000
     0.35884297E+01            0.10727691E-02  -0.40194588E-06  0.73628557E-10  -0.49269644E-14
     0.15717625E+05            -0.38820950E+00   0.34209496E+01  -0.68067366E-03   0.56527361E-05
    -0.62180348E-08            0.21531755E-11   0.15884945E+05  0.10525714E+01

LIN                 J12/66      LI 1.   N  1.   00 0.   00 0.   G      300.000      5000.000
     0.42258077E+01            0.39267187E-03  -0.12493993E-06  0.23174759E-10  -0.15851917E-14
     0.38916952E+05            0.68768563E+00   0.28894300E+01  0.52212534E-02  -0.65969021E-05
     0.37288997E-08            -0.72355143E-12   0.39216323E+05  0.72757056E+01

LIC                 J 3/64      LI 1.   C  1.   00 0.   00 0.   G      300.000      5000.000
     0.41876205E+01            0.41186574E-03  -0.14520296E-06  0.27253070E-10  -0.18864775E-14
     0.87795259E+04            0.12182630E+01   0.28389007E+01  0.51538626E-02  -0.63082382E-05
     0.34114385E-08            -0.61631343E-12   0.40884314E+04  0.78999549E+01

LIC                 J12/67      LI 1.   C  1.   E  1.   0  0.   G      300.000      5000.000
     0.41810217E+01            0.41785000E-03  -0.15024845E-06  0.24397732E-10  -0.19789181E-14
    -0.93849702E+04            0.15559110E+00   0.28515866E+01  0.50169880E-02  -0.59547475E-05
     0.30399451E-06            -0.47872969E-12  -0.90778076E+04  0.64462719E+01

LICH(S)             J 3/66      LI 1.   O  1.   H  1.   00 0.   S      300.000      744.300
     0.                        0.                0.                0.                0.
     0.                        0.                0.                0.                0.
     0.33692106E-07            -0.66439710E-11   0.63640356E-01  0.30407660E-01  -0.44034065E-04
                                                 -0.59331340E+05  -0.25794094E+01

LICH(L)             J 3/66      LI 1.   O  1.   H  1.   00 0.   L      744.300      5000.000
     0.10436979E+02            0.                0.                0.                0.
    -0.60109250E+05            -0.53641166E+02    0.10436979E+02  0.                0.
     0.                        0.                -0.60109250E+05  -0.53641166E+02

LICH                J 3/66      LI 1.   O  1.   H  1.   00 0.   G      300.000      5000.000
     0.44466064E+01            0.23584852E-02  -0.82302724E-06  0.13279161E-09  -0.81929542E-14
    -0.31003210E+05            0.22550447E+01   0.32569330E+01  0.30440910E-02   0.25371683E-05
    -0.53789639E-08            0.24765340E-11  -0.30730637E+05  0.66566487E+01

LICN                J 9/66      LI 1.   O  1.   N  1.   00 0.   G      300.000      5000.000
     0.58123496E+01            0.12370626E-02  -0.54667710E-06  0.10314987E-09  -0.71930447E-14
     0.17692302E+05            -0.43578702E+01   0.36701164E+01  0.72568177E-02  -0.58681146E-05
     0.11628312E-08            0.42704122E-12   0.20271703E+05  0.66693305E+01
```

APPENDIX A (CONTINUED)

```
LI2                J 6/62      LI 2.   00 0.   00 0.   00 0.   G      300.000      5000.000      1
  0.44338756E+01   0.22948941E-03  -0.24519024E-07  0.37448820E-11  -0.22833492E-15  2
  0.24005747E+05  -0.17116905E+01   0.37418914E+01  0.31246294E-02  -0.46337063E-05  3
  0.32618304E-08  -0.85308216E-12   0.24142156E+05  0.16040721E+01                   4

LI2CL2             J 6/62      LI 2.   CL 2.  00 0.   00 0.   G      300.000      5000.000      1
  0.95245614E+01   0.52458814E-03  -0.22337949E-06  0.41751114E-10  -0.29021366E-14  2
 -0.74990263E+05  -0.20044824E+02   0.52801351E+01  0.18384100E-01  -0.28769448E-04  3
  0.20313359E-07  -0.53433247E-11  -0.74160003E+05  0.26612705E+00                   4

LI2F2              J12/68      LI 2.   F  2.   0  0.   0  0.   G      300.000      5000.000      1
  0.89566636E+01   0.11719269E-02  -0.50990504E-06  0.37917534E-10  -0.69315602E-14  2
 -0.11637228E+06  -0.20899494E+02   0.24007508E+01  0.27066237E-01  -0.39256180E-04  3
  0.25722599E-07  -0.62237225E-11  -0.11561091E+06  0.10878616E+02                   4

LI2C(S)            J 3/64      LI 2.   O  1.   00 0.   00 0.   S      300.000      1943.000      1
  0.42774776E+01   0.78521672E-02  -0.52225090E-06  -0.17864426E-08  0.53961035E-12  2
 -0.73396278E+05  -0.21765497E+02  -0.31727239E+00  0.36147356E-01  -0.55455921E-04  3
  0.41796437E-07  -0.11804048E-10  -0.73106196E+05  -0.22880330E+01                  4

LI2C(L)            J 3/64      LI 2.   O  1.   00 0.   00 0.   L      1843.000      5000.000      1
  0.12076931E+02   0.                0.                0.                0.                2
 -0.71337921E+05  -0.65174974E+02   0.                0.                0.                3
  0.                0.                0.                0.                0.                4

LI2C               J 3/64      LI 2.   O  1.   00 0.   00 0.   G      300.000      5000.000      1
  0.66198748E+01   0.96879448E-03  -0.41490506E-06  0.78637337E-10  -0.54069292E-14  2
 -0.22255325E+05  -0.10834722E+02   0.39721708E+01  0.92460921E-02  -0.93596149E-05  3
  0.34639160E-08  -0.75658880E-13  -0.21596988E+05  0.25391411E+01                   4

LI2C2              J 3/64      LI 2.   O  2.   CO 0.   00 0.   G      300.000      5000.000      1
  0.95275260E+01   0.53021013E-03  -0.23005862E-06  0.44030831E-10  -0.31018702E-14  2
 -0.32182484E+05  -0.21872275E+02   0.55375232E+01  0.17344223E-01  -0.27197971E-04  3
  0.19305629E-07  -0.51207957E-11  -0.31402044E+05  -0.27814759E+01                  4

LI2C2H2            J 3/66      LI 2.   O  2.   H  2.   00 0.   G      300.000      5000.000      1
  0.89420609E+01   0.60583335E-02  -0.22032892E-05  0.37273081E-09  -0.24009566E-13  2
 -0.94593042E+05  -0.21057433E+02   0.28083765E+01  0.26969790E-01  -0.21603275E-04  3
  0.63288723E-08   0.64221372E-12  -0.93070670E+05  0.99492004E+01                   4

LI3CL3             J 6/62      LI 3.   CL 3.  00 0.   00 0.   G      300.000      5000.000      1
  0.14319440E+02   0.18854007E-02  -0.81978330E-06  0.15735494E-09  -0.11119472E-13  2
 -0.12558851E+06  -0.42724175E+02   0.45745959E+01  0.37749239E-01  -0.56508213E-04  3
  0.36294145E-07  -0.85784700E-11  -0.12353351E+06  0.46674442E+01                   4

LI3F3              J12/68      LI 3.   F  3.   0  0.   0  0.   G      300.000      5000.000      1
  0.14364422E+02   0.18285498E-02  -0.79221159E-06  0.15154529E-09  -0.10675673E-13  2
 -0.18723736E+06  -0.45074076E+02   0.46413975E+01  0.39878696E-01  -0.57248951E-04  3
  0.37193544E-07  -0.89230125E-11  -0.18519852E+06  0.21491967E+01                   4

MG(S)              J 9/62      MG 1.   O  0.   0  0.   0  0.   S      300.000      922.000       1
  0.                0.                0.                0.                0.                2
  0.                0.                0.                0.52825746E-02  0.                3
  0.81194529E-08  -0.23538706E-11  -0.20184771E+01  -0.88131212E+01  -0.89160059E-05  4

MG(L)              J 9/62      MG 1.   O  0.   0  0.   0  0.   L      922.000      5000.000      1
  0.26570516E+01   0.13083966E-02  0.                0.                0.                2
  0.22868300E+03  -0.10433817E+02   0.26570516E+01  0.13083966E-02  0.                3
  0.                0.                0.22868300E+03  -0.10433817E+02                  4

MG                 J 9/62      MG 1.   00 0.   00 0.   00 0.   G      300.000      5000.000      1
  0.24188605E+01   0.16145771E-03  -0.99399205E-07  0.18987312E-10  0.91656165E-16  2
  0.17036992E+05   0.40641123E+01   0.24988751E+01  0.87668205E-05  -0.23614632E-07  3
  0.26287528E-10  -0.10308811E-13   0.17008321E+05  0.36263633E+01                   4

MG+                J12/67      MG 1.   E -1.   0  0.   0  0.   G      300.000      5000.000      1
  0.25084828E+01  -0.17499680E-04   0.12102317E-07  -0.34320303E-11  0.34453473E-15  2
  0.19571437E+06   0.42885235E+01   0.24961675E+01  0.27410788E-04  -0.68663760E-07  3
  0.72015616E-10  -0.26930064E-13   0.19571774E+06  0.43307379E+01                   4

MGCL               J 3/66      MG 1.   CL 1.  00 0.   00 0.   G      300.000      5000.000      1
  0.41775873E+01   0.18834178E-03  -0.54488592E-07  0.39681031E-11  -0.66949611E-15  2
 -0.49830826E+04   0.29762332E+01   0.33800534E+01  0.52813389E-02  -0.64457343E-05  3
  0.44472291E-08  -0.11421727E-11  -0.63826560E+04  0.77759327E+01                   4

MGCL+              J 6/68      MG 1.   CL 1.  E -1.   0  0.   G      300.000      5000.000      1
  0.63512344E+01   0.37967190E-02   0.24712945E-05  -0.50923653E-09  0.43672725E-13  2
  0.76480979E+05   0.83015040E+01   0.35012230E+01  0.34731859E-02  -0.51351140E-05  3
  0.34446337E-06  -0.83048206E-12   0.77314688E+05  0.61207176E+01                   4
```

ORIGINAL PAGE IS
OF POOR QUALITY

APPENDIX A (CONTINUED)

```
MGCLF                J 3/66      MG 1.   CL 1.   F  1,   00 0.   G      300.000        5000.000      1
  0.65536109E+01     0.49503794E-03    -0.21265567E-06   0.46342907E-10   -0.28194[illegible]E-14   2
 -0.70522498E+05    -0.61610398E+01     0.39675363E+01   0.10451566E-01   -0.14846[illegible]E-04   3
  0.94797313E-08    -0.22227485E-11    -0.69974510E+05   0.64280836E+01                             4

MGCL2(S)             J12/65      MG 1.   CL 2.   00 0.   00 0.   S      300.000        987.000       1
  0.                 0.                 0.                0.                0.                0.            2
  0.                 0.                 0.54491296E+01   0.16745224E-01   -0.24956[illegible]E-04   3
  0.19111573E-07    -0.51059014E-11    -0.79343894E+05  -0.74261084E+02                             4

MGCL2(L)             J12/65      MG 1.   CL 2.   00 0.   00 0.   L      987.000        5000.000      1
  0.11071048E+02     0.                 0.                0.                0.                0.            2
 -0.76294618E+05    -0.48972588E+02     0.11071048E+02   0.                0.                0.            3
  0.                 0.                -0.76294618E+05  -0.48972588E+02                             4

MGCL2                J12/69      MG 1.   CL 2.   0  0.   0  0.   G      300.000        5000.000      1
  0.72401913E+01     0.28856239E-03    -0.12401187E-06   0.23527101E-10   -0.16443204E-14   2
 -0.44442326E+05    -0.81940550E+01     0.54095529E+01   0.77205281E-02   -0.11620054E-04   3
  0.79417889E-08    -0.20252502E-11    -0.49076537E+05   0.63400455E+00                             4

MGF                  J 3/67      MG 1.   F  1.   00 0.   00 0.   G      300.000        5000.000      1
  0.42110735E+01     0.36113259E-03    -0.13239539E-06   0.24644432E-10   -0.16919054E-14   2
 -0.28058832E+05     0.23145832E+01     0.28664199E+01   0.51665818E-02   -0.65086664E-05   3
  0.36302039E-08    -0.69177563E-12    -0.27754852E+05   0.89564751E+01                             4

MGF2(S)              J 3/66      MG 1.   F  2.   00 0.   00 0.   S      300.000        1536.000      1
  0.66953750E+01     0.43929188E-02    -0.11903584E-05  -0.53862104E-09   0.31219775E-12   2
 -0.13736474E+06    -0.32490950E+02     0.21304889E+01   0.28642721E+01   -0.45495513E-04   3
  0.33548644E-07    -0.91548251E-11    -0.13678478E+06  -0.12056724E+02                             4

MGF2(L)              J 3/66      MG 1.   F  2.   00 0.   00 0.   L      1536.000       5000.000      1
  0.11357889E+02     0.                 0.                0.                0.                0.            2
 -0.13400296E+06    -0.57018403E+02     0.                0.                0.                0.            3
  0.                 0.                 0.                0.                                            4

MGF2                 J 3/66      MG 1.   F  2.   00 0.   00 0.   G      300.000        5000.000      1
  0.64284668E+01     0.63969995E-03    -0.27809763E-06   0.53430244E-10   -0.37812054E-14   2
 -0.89226616E+05    -0.60380744E+01     0.37708721E+01   0.10406361E-01   -0.13695270E-04   3
  0.80146506E-08    -0.16568864E-11    -0.88639643E+05   0.70214053E+01                             4

MGH                  J12/66      MG 1.   H  1.   00 0.   00 0.   G      300.000        5000.000      1
  0.34638591E+01     0.12404055E-02    -0.50278210E-06   0.98118834E-10   -0.66183069E-14   2
  0.19176310E+05     0.29845865E+01     0.35102397E+01  -0.12368352E-02    0.64246958E-05   3
 -0.66054846E-08     0.22003625E-11     0.19293893E+05   0.33604888E+01                             4

MGN                  J 3/64      MG 1.   N  1.   00 0.   00 0.   G      300.000        5000.000      1
  0.42214417E+01     0.36489240E-03    -0.12995730E-06   0.24418940E-10   -0.16917759E-14   2
  0.33382931E+05     0.27188874E+01     0.28894549E+01   0.51757175E-02   -0.65849016E-05   3
  0.37218933E-08    -0.72305964E-12     0.33681058E+05   0.92844249E+01                             4

MGO(S)               J12/65      MG 1.   O  1.   00 0.   00 0.   S      300.000        3098.000      1
  0.51120198E+01     0.17231664E-02    -0.90268818E-06   0.26460605E-09   -0.20339967E-13   2
 -0.74084363E+05    -0.26784367E+02     0.47740339E+00   0.21441338E-01   -0.33453671E-04   3
  0.24347437E-07    -0.66578961E-11    -0.73158228E+05  -0.45834874E+01                             4

MGO(L)               J12/65      MG 1.   O  1.   00 0.   00 0.   L      3098.000       5000.000      1
  0.72964786E+01     0.                 0.                0.                0.                0.            2
 -0.67744028E+05    -0.38362761E+02     0.                0.                0.                0.            3
  0.                 0.                 0.                0.                                            4

MGC                  J12/65      MG 1.   O  1.   00 0.   00 0.   G      300.000        5000.000      1
  0.40654306E+01     0.54784296E-03    -0.19704758E-06   0.36606637E-10   -0.25102520E-14   2
 -0.81403801E+03     0.31C30930E+01     0.28442075E+01   0.41055545E-02   -0.35061249E-05   3
  0.72885498E-09     0.27783028E-12    -0.49777511E+03   0.93349957E+01                             4

MGCH                 J 6/67      MG 1.   O  1.   H  1.   00 0.   G      300.000        5000.000      1
  0.44328606E+01     0.25811369E-02    -0.91887783E-06   0.15151484E-09   -0.93758[illegible]E-14   2
 -0.27755885E+05     0.25918925E+00     0.16842602E+01   0.10914848E-01   -0.87026993E-05   3
  0.13936126E-08     0.94723708E-12    -0.27081380E+05   0.14150863E+02                             4

MGCH+                J 6/68      MG 1.   O  1.   H  1.   E -1.   G      300.000        5000.000      1
  0.47424330E+01     0.22877007E-02    -0.80398933E-06   0.13175298E-09   -0.82424[illegible]E-14   2
  0.70323806E+05    -0.18812567E+01     0.17246936E+01   0.13231006E-01   -0.14929146E-04   3
  0.73413788E-08    -0.10187671E-11     0.70977879E+05   0.12933122E+02                             4

MGC2H2               J 6/67      MG 1.   O  2.   H  2.   00 0.   G      300.000        5000.000      1
  0.73269210E+01     0.49370374E-02    -0.18021108E-05   0.30460208E-09   -0.19539992E-13   2
 -0.71132802E+05    -0.10591697E+02     0.42789288E+01   0.15680923E-01   -0.15568577E-04   3
  0.74423876E-08    -0.10867487E-11    -0.70438934E+05   0.44099763E+01                             4
```

APPENDIX A (CONTINUED)

```
N                 J 3/61      N  1.   00 0.   00 0.   G      300.000      5000.000      1
  0.24502682E+01   0.10661458E-03  -0.74653373E-07   0.18796524E-13  -0.1[illegible]E-14   2
  0.56116040E+05   0.44487581E+01   0.25030714E+01  -0.21801181E-04   0.[illegible]E-07   3
 -0.54475602E-10   0.20599044E-13   0.56098904E+05   0.41675764E+01                       4

NF                J 6/65      N  1.   F  1.   00 0.   00 0.   G      300.000      5000.000      1
  0.38624046E+01   0.74409961E-03  -0.29304178E-06   0.55130022E-10  -0.48117928E-14   2
  0.28669390E+05   0.34570237E+01   0.30486680E+01   0.19566867E-02   0.94322448E-06   3
 -0.29336643E-08   0.13504454E-11   0.28941688E+05   0.79092363E+01                       4

NF2               J 3/64      N  1.   F  2.   00 0.   00 0.   G      300.000      5000.000      1
  0.57186890E+01   0.14102822E-02  -0.60493969E-06   0.11491911E-09  -0.80536431E-14   2
  0.30992968E+04  -0.34469259E+01   0.25009872E+01   0.10721062E-01  -0.92064150E-05   3
  0.17027666E-08   0.71249647E-12   0.39376954E+04   0.12994042E+02                       4

NF3               J 6/69      N  1.   F  3.   0  0.   0  0.   G      300.000      5000.000      1
  0.79819180E+01   0.22349897E-02  -0.96301027E-06   0.18357806E-09  -0.12901442E-13   2
 -0.18673358E+05  -0.15667394E+02   0.12676904E+01   0.24289231E-01  -0.26935971E-04   3
  0.11994191E-07  -0.12905657E-11  -0.17059051E+05   0.17977633E+02                       4

NH                J12/65      N  1.   H  1.   00 0.   00 0.   G      300.000      5000.000      1
  0.27741580E+01   0.13179398E-02  -0.38379707E-06   0.54142146E-10  -0.28838332E-14   2
  0.39959049E+05   0.57923234E+01   0.34889532E+01   0.28026519E-03  -0.13456768E-05   3
  0.22935931E-08  -0.95757540E-12   0.39714793E+05   0.18654962E+01                       4

NH2               J12/65      N  1.   H  2.   00 0.   00 0.   G      300.000      5000.000      1
  0.25769524E+01   0.35896090E-02  -0.12276328E-05   0.19549576E-09  -0.11873401E-13   2
  0.19335912E+05   0.79074890E+01   0.40385791E+01  -0.10098163E-02   0.40120903E-05   3
 -0.23085312E-08   0.39022887E-12   0.18973010E+05   0.52464285E+00                       4

NH3               J 9/65      N  1.   H  3.   00 0.   00 0.   G      300.000      5000.000      1
  0.24165177E+01   0.61871711E-02  -0.21785136E-05   0.37599090E-09  -0.24448856E-13   2
 -0.64747177E+04   0.77043482E+01   0.35912768E+01   0.49388668E-03   0.83449322E-05   3
 -0.83833385E-08   0.27299092E-11  -0.66717143E+04   0.22520966E+01                       4

NO                J 6/63      N  1.   O  1.   00 0.   00 0.   G      300.000      5000.000      1
  0.31890000E+01   0.13382281E-02  -0.52899318E-06   0.95919332E-10  -0.64847932E-14   2
  0.98283290E+04   0.67458126E+01   0.40459521E+01  -0.34181783E-02   0.79819190E-05   3
 -0.61139316E-08   0.15919076E-11   0.97453934E+04   0.29974988E+01                       4

NO+               J 6/66      N  1.   O  1.   E -1.   00 0.   G      300.000      5000.000      1
  0.28885488E+01   0.15217119E-02  -0.57531241E-06   0.10051081E-09  -0.66044254E-14   2
  0.11819245E+06   0.70027197E+01   0.36685056E+01  -0.11544580E-02   0.21756608E-05   3
 -0.48227472E-09  -0.27847906E-12   0.11803369E+06   0.31779324E+01                       4

NOCL              J12/65      N  1.   O  1.   CL 1.   00 0.   G      300.000      5000.000      1
  0.54195728E+01   0.18136694E-02  -0.66876691E-06   0.12297226E-09  -0.84020916E-14   2
  0.44171536E+04  -0.19183566E+00   0.40280308E+01   0.59428529E-02  -0.55620366E-05   3
  0.29353736E-08  -0.66617496E-12   0.48034480E+04   0.69647732E+01                       4

NOF               J 6/61      N  1.   O  1.   F  1.   00 0.   G      300.000      5000.000      1
  0.51906666E+01   0.18924266E-02  -0.78642361E-06   0.14626364E-09  -0.10097419E-13   2
 -0.96758164E+04  -0.62298477E+00   0.32902070E+01   0.74045493E-02  -0.66195803E-05   3
  0.26529282E-08  -0.29526815E-12  -0.91566645E+04   0.91451185E+01                       4

NOF3              J 6/70      N  1.   O  1.   F  3.   0  0.   G      300.000      5000.000      1
  0.98929009E+01   0.33819898E-02  -0.14438138E-05   0.27381685E-09  -0.19186406E-13   2
 -0.23185488E+05  -0.24944299E+02   0.14275875E+01   0.32431849E-01  -0.38573384E-04   3
  0.20510613E-07  -0.37109560E-11  -0.21189425E+05   0.17224286E+02                       4

NO2               J 3/64      N  1.   O  2.   00 0.   00 0.   G      300.000      5000.000      1
  0.46240771E+01   0.25360332E-02  -0.10609498E-05   0.19879239E-09  -0.13799384E-13   2
  0.22899900E+04   0.13324138E+01   0.34589236E+01   0.20647064E-02   0.66866067E-05   3
 -0.95556725E-08   0.36195881E-11   0.28152265E+04   0.83116983E+01                       4

NO2-              J12/65      N  1.   O  2.   E  1.   00 0.   G      300.000      5000.000      1
  0.53794422E+01   0.20860322E-02  -0.88823762E-06   0.16801079E-09  -0.11743414E-13   2
 -0.45037907E+05  -0.16367650E+01   0.29474526E+01   0.91836832E-02   0.24205126E-05   3
 -0.75758344E-08   0.34577493E-11  -0.44317583E+05   0.10052399E+02                       4

NO2CL             J12/65      N  1.   O  2.   CL 1.   00 0.   G      300.000      5000.000      1
  0.72052139E+01   0.29949809E-02  -0.12641260E-05   0.23758750E-09  -0.16524848E-13   2
 -0.11364123E+04  -0.99256667E+01   0.30302225E+01   0.14538930E-01  -0.11645930E-04   3
  0.25890139E-08   0.64589481E-12   0.76652034E+01   0.11618599E+02                       4

NO2F              J12/65      N  1.   O  2.   F  1.   00 0.   G      300.000      5000.000      1
  0.68639166E+01   0.23554437E-02  -0.14158297E-05   0.26622227E-09  -0.18531606E-13   2
 -0.15621287E+05  -0.95806218E+01   0.22424380E+01   0.16289716E-01  -0.13344332E-04   3
  0.32719425E-08   0.59144703E-12  -0.14364205E+05   0.14218996E+02                       4
```

APPENDIX A (CONTINUED)

```
N2                  J 9/65      N  2.   0  0.   0  0.   0  0.   G      300.000      5000.000   1
 0.28963194E+01   0.15154866E-02  -0.57735277E-06  0.99807393E-10  -0.65223555E-14   2
-0.90586184E+03   0.61615140E+01   0.36748261E+01  -0.12081500E-02   0.23240102E-05   3
-0.63217559E-09  -0.22577253E-12  -0.10611588E+04   0.23580424E+01                   4

N2C                 J 6/66      N  2.   C  1.  00 0.  00 0.   G      300.000      5000.000   1
 0.59145719E+01   0.17176878E-02  -0.73057492E-06  0.13812907E-09  -0.96540216E-14   2
 0.49688947E+05  -0.73560996E+01   0.28823173E+01  0.10861809E-01  -0.10399571E-04   3
 0.34580460E-06  -0.17324120E-12   0.50474679E+05  0.80410069E+01                   4

N2H4                J12/65      N  2.   H  4.  00 0.  00 0.   G      300.000      5000.000   1
 0.50947770E+01   0.93296138E-02  -0.33626986E-05  0.56308304E-09  -0.35859661E-13   2
 0.92996644E+04  -0.35950952E+01   0.79803836E+00  0.21788097E-01  -0.13456754E-04   3
-0.12698753E-09   0.25865213E-11   0.10379887E+05  0.18248696E+02                   4

N2O                 J12/64      N  2.   O  1.  00 0.  00 0.   G      300.000      5000.000   1
 0.47306679E+01   0.28258267E-02  -0.11558115E-05  0.21263603E-09  -0.14564087E-13   2
 0.81617682E+04  -0.17151073E+01   0.26189196E+01  0.86439616E-02  -0.68110624E-05   3
 0.22275877E-08  -0.80650330E-13   0.87590123E+04  0.92266952E+01                   4

N2O4                J 9/64      N  2.   O  4.  00 0.  00 0.   G      300.000      5000.000   1
 0.13506637E+02   0.58723267E-02  -0.24766296E-05  0.46556024E-09  -0.32402082E-13   2
-0.28609096E+04  -0.26252230E+02   0.36662865E+01  0.23491748E-01  -0.16007297E-04   3
 0.11845939E-08   0.20001618E-11  -0.90631797E+03  0.93973337E+01                   4

NA(S)               J 6/62      NA 1.   0  0.   0  0.   0  0.   S      300.000      370.980    1
 0.                  0.                  0.                  0.                  0.   2
 0.                  0.                  0.24118570E+01  0.89751859E-03  0.10583331E-04   3
-0.71915700E-08  -0.58226618E-11  -0.83578157E+03  -0.82157280E+01                  4

NA(L)               J 6/62      NA 1.   0  0.   0  0.   0  0.   L      370.980      2000.000   1
 0.40097373E+01  -0.12933184E-02   0.42443918E-06  0.52381272E-09  -0.183968C2E-12   2
-0.78115472E+03  -0.15366128E+02   0.45673226E+01  -0.25267108E-02  0.14840018E-05   3
 0.38590020E-10  -0.82500844E-13  -0.97421906E+03  -0.18377804E+02                  4

NA                  J 6/62      NA 1.  00 0.  00 0.  00 0.   G      300.000      5000.000   1
 0.25623078E+01  -0.13963284E-03   0.11292708E-06  -0.42307737E-10  0.67057055E-14   2
 0.12193782E+05   0.38957727E+01   0.24881726E+01  0.85426102E-04  -0.21514228E-06   3
 0.22671887E-09  -0.85125266E-13   0.12215904E+05  0.42804839E+01                   4

NA+                 J 3/65      NA 1.   E -1.  00 0.  00 0.   G      300.000      5000.000   1
 0.25000000E+01   0.                  0.                  0.                  0.   2
 0.72599329E+05   0.35374014E+01   0.25000000E+01  0.                  0.   3
 0.                  0.                  0.72599330E+05  0.35374014E+01                   4

NACL(S)             J 9/64      NA 1.  CL 1.   0  0.   0  0.   S      300.000      1073.800   1
 0.22134927E+01   0.15859902E-02   0.50486383E-05  0.26020549E-08  -0.36487096E-11   2
-0.40263203E+05  -0.26025660E+01   0.50240778E+01  0.51943066E-02  -0.72833730E-05   3
 0.63671979E-08  -0.12013424E-11  -0.51123335E+05  -0.21227201E+02                  4

NACL(L)             J 9/64      NA 1.  CL 1.   0  0.   0  0.   L      1073.800     5000.000   1
 0.12358487E+02  -0.63071201E-02   0.32004723E-05  -0.67717362E-09  0.51015612E-13   2
-0.51423265E+05   0.60585530E+02   0.                  0.                  0.   3
 0.                  0.                  0.                  0.                  4

NACL                J12/64      NA 1.  CL 1.  00 0.  00 0.   G      300.000      5000.000   1
 0.44829931E+01   0.15627241E-03  -0.28108383E-07  0.47163571E-11  -0.28832557E-15   2
-0.23170900E+05   0.22878194E+01   0.37032286E+01  0.31997608E-02  -0.48924502E-05   3
 0.34639218E-08  -0.91357521E-12  -0.23028276E+05  0.57603243E+01                   4

NAF(S)              J12/68      NA 1.   F  1.   0  0.   0  0.   S      300.000      1269.000   1
 0.78342026E+01  -0.94839180E-03  -0.54843986E-05  0.86843022E-08  -0.29285860E-11   2
-0.71810405E+05  -0.38815710E+02   0.36977552E+01  0.10520572E-01  -0.17235656E-04   3
 0.14125911E-07  -0.39514529E-11  -0.70647183E+05  -0.17396433E+02                  4

NAF(L)              J12/68      NA 1.   F  1.   0  0.   0  0.   L      1269.000     3500.000   1
 0.10963261E+02  -0.32068459E-02   0.11611662E-05  -0.16299297E-09  0.52456141E-14   2
-0.70673943E+05  -0.66375695E+02   0.                  0.                  0.   3
 0.                  0.                  0.                  0.                  4

NAF                 J12/68      NA 1.   F  1.   0  0.   0  0.   G      300.000      5000.000   1
 0.43366882E+01   0.25800580E-03  -0.72954961E-07  0.13348457E-10  -0.90007565E-15   2
-0.36323975E+05   0.12663019E+01   0.31643325E+01  0.49686921E-02  -0.72910807E-05   3
 0.49308423E-08  -0.12475984E-11  -0.36083204E+05  0.69325349E+01                   4

NAF2-               J12/68      NA 1.   F  2.   E  1.   0  0.   G      300.000      5000.000   1
 0.71223193E+01   0.41884055E-03  -0.17972299E-06  0.34041229E-10  -0.23751225E-14   2
-0.82755730E+05  -0.10799851E+02   0.45826889E+01  0.16605211E-01  -0.15720501E-04   3
 0.10547297E-07  -0.26415920E-11  -0.82234497E+05  0.14765312E+01                   4
```

ORIGINAL PAGE IS OF POOR QUALITY

APPENDIX A (CONTINUED)

```
NAH                 J 3/63      NA 1.   H  1.   00 0.   00 0.   G      300.000      5000.000      1
  0.38130579E+01   0.85643800E-03  -0.31226816E-06   0.98502671E-10  -0.40513924E-14   2
  0.13683062E+05   0.47100286E+00   0.31203950E+01   0.13946217E-02   0.22141234E-05   3
 -0.39950795E-08   0.16726178E-11   0.13940065E+05   0.43813999E+01                   4

NAO                 J12/67      NA 1.   O  1.   0  0.   0  0.   G      300.000      5000.000      1
  0.43924158E+01   0.21320574E-03  -0.45220598E-07   0.79751821E-11  -0.51735409E-15   2
  0.87118995E+04   0.23749248E+01   0.34421007E+01   0.91617241E-02  -0.63114348E-05   3
  0.44479199E-08  -0.11720486E-11   0.89011477E+04   0.69371625E+01                   4

NAO-                J12/67      NA 1.   O  1.   E  1.   0  0.   G      300.000      5000.000      1
  0.41868008E+01   0.22344672E-03  -0.48212472E-07   0.89720862E-11  -0.56094336E-15   2
 -0.15946268E+05   0.10004509E+01   0.34168855E+01   0.42117382E-02  -0.63164644E-05   3
  0.43873515E-08  -0.11372639E-11  -0.15752234E+05   0.56553725E+01                   4

NACH(S)             J 3/66      NA 1.   O  1.   H  1.   00 0.   S      300.000      592.250       1
  0.                0.                0.                0.                0.                2
  0.                0.                0.69758356E+01   0.13845689E-01  -0.11496212E-03   3
  0.30599796E-06  -0.22897632E-09  -0.53448255E+05  -0.33193509E+02                   4

NACH(L)             J 3/66      NA 1.   O  1.   H  1.   00 0.   L      592.250      5000.000      1
  0.10774143E+02  -0.70452126E-03   0.                0.                0.                2
 -0.53503303E+05  -0.52256989E+02   0.10774143E+02  -0.70452126E-03   0.                3
  0.                0.               -0.53503303E+05  -0.52256989E+02                   4

NACH                J 3/66      NA 1.   O  1.   H  1.   00 0.   G      300.000      5000.000      1
  0.44705183E+01   0.19253365E-02  -0.62522237E-06   0.95321167E-10  -0.55722160E-14   2
 -0.26808187E+05   0.23116081E+01   0.37588137E+01   0.41793587E-02  -0.26908011E-05   3
  0.22226965E-09   0.39074039E-12  -0.26645967E+05   0.58652624E+01                   4

NA2                 J 6/62      NA 2.   00 0.   00 0.   00 0.   G      300.000      5000.000      1
  0.44923659E+01   0.19571359E-03   0.22658417E-08  -0.10132954E-11   0.10965752E-15   2
  0.15186081E+05   0.20044168E+01   0.43197514E+01   0.91397957E-03  -0.11333878E-05   3
  0.79289225E-09  -0.20379358E-12   0.15220419E+05   0.28326974E+01                   4

NA2CL2              J12/64      NA 2.   CL 2.   00 0.   00 0.   G      300.000      5000.000      1
  0.98262001E+01   0.19184763E-03  -0.81608743E-07   0.15798181E-10  -0.10558954E-14   2
 -0.71077149E+05  -0.17049256E+02   0.79583953E+01   0.83962360E-02  -0.13017116E-04   3
  0.19277666E-07  -0.28644994E-11  -0.70725939E+05  -0.81884799E+01                   4

NA2F2               J12/68      NA 2.   F  2.   0  0.   0  0.   G      300.000      5000.000      1
  0.94335530E+01   0.63611588E-03  -0.27624720E-06   0.52917190E-10  -0.37313353E-14   2
 -0.16480114E+06  -0.19766155E+02   0.48212191E+01   0.19836396E-01  -0.30617614E-04   3
  0.21337040E-07  -0.55344314E-11  -0.10389005E+06   0.23530917E+01                   4

NE                  L 5/66      NE 1.   00 0.   00 0.   00 0.   G      300.000      5000.000      1
  0.25000000E+01   0.                0.                0.                0.                2
 -0.74537500E+03   0.33420438E+01   0.25000000E+01   0.                0.                3
  0.                0.              -0.74537498E+03   0.33420438E+01                   4

NE+                 L12/66      NE 1.   E -1.   00 0.   00 0.   G      300.000      5000.000      1
  0.29285147E+01  -0.41229320E-03   0.16341709E-06  -0.29554891E-10   0.20056917E-14   2
  0.25015218E+06   0.24159397E+01   0.21006406E+01   0.32416425E-02  -0.56265881E-05   3
  0.38693079E-08  -0.93291304E-12   0.25029535E+06   0.63098678E+01                   4

C                   J 6/62      C  1.   00 0.   00 0.   00 0.   G      300.000      5000.000      1
  0.25420596E+01  -0.27550619E-04  -0.31028033E-08   0.45510674E-11  -0.43680515E-15   2
  0.29230803E+05   0.49303080E+01   0.29464287E+01  -0.16381665E-02   0.24210316E-05   3
 -0.16028432E-08   0.38506964E-12   0.29147644E+05   0.29639949E+01                   4

C+                  L12/66      C  1.   E -1.   00 0.   00 0.   G      300.000      5000.000      1
  0.25060486E+01  -0.14464249E-04   0.12446049E-07  -0.46858472E-11   0.65548873E-15   2
  0.18794700E+06   0.43479741E+01   0.24984794E+01   0.11410972E-04  -0.29761355E-07   3
  0.32246539E-10  -0.12375517E-13   0.18794908E+06   0.43864355E+01                   4

C-                  J 6/65      C  1.   E  1.   00 0.   00 0.   G      300.000      5000.000      1
  0.25437173E+01  -0.53258700E-04   0.25119617E-07  -0.51851466E-11   0.39011542E-15   2
  0.11480516E+05   0.45202538E+01   0.28115796E+01  -0.11905697E-02   0.18710593E-05   3
 -0.13479178E-08   0.36663554E-12   0.11428431E+05   0.32402855E+01                   4

CH                  J 3/66      C  1.   H  1.   00 0.   00 0.   G      300.000      5000.000      1
  0.29106427E+01   0.95931650E-03  -0.19441702E-06   0.13756646E-10   0.14224542E-15   2
  0.39353815E+04   0.54423445E+01   0.38375943E+01  -0.10778858E-02   0.96830370E-06   3
  0.18713972E-09  -0.22571094E-12   0.36412823E+04   0.49370009E+00                   4

CH+                 J 3/66      C  1.   H  1.   E -1.   00 0.   G      300.000      5000.000      1
  0.27544809E+01   0.15025381E-02  -0.49411191E-06   0.79062805E-10  -0.48153427E-14   2
  0.14759966E+06   0.60078467E+01   0.35447365E+01  -0.10370383E-03  -0.54786128E-06   3
  0.18897588E-08  -0.94577482E-12   0.15736596E+06   0.18137392E+01                   4
```

ORIGINAL PAGE IS
OF POOR QUALITY

APPENDIX A (CONTINUED)

```
CH-                 J 3/66      C  1.   H  1.   F  1.   00 0.   G      300.000      5000.000     1
  0.28772416E+01   0.59323674E-03  -0.21167064E-06   0.17074738E-10   0.10719642E-15   2
 -0.18124287E+05   0.42625868E+01   0.34554504E+01   0.45712434E-03  -0.14994214E-05   3
  0.19713519E-08  -0.70807531E-12  -0.18351948E+05   0.97441617E+00                    4

C2                  J 9/65      C  2.   0  0.   0  0.   0  0.   G      300.000      5000.000     1
  0.36219535E+01   0.73618264E-03  -0.19652728E-06   0.36201558E-10   0.28045677E-14   2
 -0.12019825E+04   0.36150960E+01   0.36255985E+01  -0.18782164E-02   0.70554544E-05   3
 -0.67635137E-08   0.21555993E-11  -0.10475226E+04   0.43052779E+01                    4

C2-                 J12/66      C  2.   E  1.   00 0.   00 0.   G      300.000      5000.000     1
  0.38147234E+01   0.77444546E-03  -0.30677649E-06   0.56618114E-10  -0.38229402E-14   2
 -0.69910087E+04   0.29587795E+01   0.31440525E+01   0.12127972E-02   0.23812161E-05   3
 -0.40914092E-08   0.16885304E-11  -0.67369762E+04   0.67668667E+01                    4

P                   J 6/62      P  1.   00 0.   00 0.   00 0.   G      300.000      5000.000     1
  0.26302628E+01  -0.17633559E-03   0.12025113E-07   0.19742455E-10  -0.16623295E-14   2
  0.33352993E+05   0.46295133E+01   0.25010145E+01  -0.71502101E-05   0.17000178E-07   3
 -0.19050206E-10   0.73374466E-14   0.39407793E+05   0.53665581E+01                    4

P(S)                J 6/61      P  1.   0  0.   0  0.   0  0.   S      300.000      900.000      1
  0.                0.                0.                0.                0.                2
  0.                0.                0.11869142E+01   0.75957720E-02  -0.13645426E-04   3
  0.13366476E-07  -0.47391960E-11  -0.59485421E+03  -0.57859428E+01                    4

P+                  L12/66      P  1.   E -1.   00 0.   00 0.   G      300.000      5000.000     1
  0.25021547E+01  -0.58878899E-03   0.31298119E-06  -0.59727539E-10   0.39304925E-14   2
  0.16204407E+06   0.38205698E+01   0.43790417E+01  -0.66466723E-02   0.89340962E-05   3
 -0.54858021E-08   0.12098857E-11   0.16174775E+06  -0.13068769E+01                    4

PCL3                J 6/70      P  1.   CL 3.   0  0.   0  0.   G      300.000      5000.000     1
  0.94566116E+01   0.60278401E-03  -0.25846878E-06   0.48904266E-10  -0.34083285E-14   2
 -0.35604613E+05  -0.16542803E+02   0.52590537E+01   0.17880566E-01  -0.27317585E-04   3
  0.18898240E-07  -0.48738456E-11  -0.34764487E+05   0.32391765E+01                    4

PF3                 J12/69      P  1.   F  3.   0  0.   0  0.   G      300.000      5000.000     1
  0.84347733E+01   0.17393920E-02  -0.75119808E-06   0.14344247E-09  -0.10093979E-13   2
 -0.11608084E+06  -0.16476765E+02   0.23621878E+01   0.22820945E-01  -0.27656642E-04   3
  0.14490962E-07  -0.24602360E-11  -0.11467696E+06   0.13673269E+02                    4

PF5                 J12/69      P  1.   F  5.   0  0.   0  0.   G      300.000      5000.000     1
  0.12846184E+02   0.35104485E-02  -0.15198604E-05   0.29101904E-09  -0.20534708E-13   2
 -0.19426232E+06  -0.39487705E+02   0.10523249E+01   0.44454004E-01  -0.53901429E-04   3
  0.28416686E-07  -0.49143248E-11  -0.19153737E+06   0.19075847E+02                    4

PH                  J 6/67      P  1.   H  1.   00 0.   00 0.   G      300.000      5000.000     1
  0.30745442E+01   0.11698947E-02  -0.30381654E-06   0.44436314E-10  -0.27800975E-14   2
  0.29526775E+05   0.57548835E+01   0.36803433E+01  -0.12756018E-02   0.25932442E-05   3
  0.84354107E-09  -0.17208609E-12   0.29433909E+05   0.29054762E+01                    4

PH3                 J 6/62      P  1.   H  3.   00 0.   00 0.   G      300.000      5000.000     1
  0.33448794E+01   0.65770941E-02  -0.26336755E-05   0.47744460E-09  -0.32354350E-13   2
  0.12837666E+04   0.39416278E+01   0.31581935E+01   0.24941492E-01   0.90255253E-05   3
 -0.10227904E-07   0.32834250E-11   0.16387061E+04   0.62245564E+01                    4

PN                  J 9/62      P  1.   N  1.   00 0.   00 0.   G      300.000      5000.000     1
  0.34419226E+01   0.94460672E-03  -0.38923480E-06   0.73215826E-10  -0.50961632E-14   2
  0.11393698E+05   0.41772775E+01   0.33755239E+01  -0.41009386E-03   0.51265151E-05   3
 -0.59478898E-08   0.21213582E-11   0.11578840E+05   0.60897418E+01                    4

PO                  J12/60      P  1.   O  1.   00 0.   00 0.   G      300.000      5000.000     1
  0.34889008E+01   0.73137263E-03  -0.29549285E-06   0.55085807E-10  -0.38004822E-14   2
 -0.16713892E+04   0.45609736E+01   0.39692758E+01  -0.22016040E-02   0.77324127E-05   3
 -0.78250095E-08   0.26509901E-11  -0.18721788E+04   0.45414990E+01                    4

PS                  J 6/67      P  1.   S  1.   00 0.   00 0.   G      300.000      5000.000     1
  0.43563526E+01   0.20240865E-03  -0.78686674E-07   0.15193435E-10  -0.11648513E-15   2
  0.93838309E+04   0.32161159E+01   0.37492024E+01   0.24330574E-02  -0.41107901E-05   3
  0.17650760E-08  -0.34208790E-12   0.95171437E+04   0.61975908E+01                    4

P2                  J 6/61      P  2.   00 0.   00 0.   00 0.   G      300.000      5000.000     1
  0.41611733E+01   0.39620800E-03  -0.15580339E-06   0.29093474E-10  -0.20342458E-14   2
  0.20146756E+05   0.22279293E+01   0.28391107E+01   0.48265173E-02  -0.54947458E-05   3
  0.25800507E-08  -0.32236453E-12   0.20459594E+05   0.88292470E+01                    4

P4                  J 6/61      P  4.   00 0.   00 0.   00 0.   G      300.000      5000.000     1
  0.72262789E+01   0.26894128E-03  -0.37758338E-06   0.72379666E-10  -0.51066129E-14   2
  0.12490323E+05  -0.19654868E+02   0.35353300E+01   0.24125292E-01  -0.36462759E-04   3
  0.24916906E-07  -0.43298563E-11   0.13635307E+05   0.77427126E+01                    4
```

APPENDIX A (CONTINUED)

```
S(S)            J12/65      S 1.   0 0.   0 0.   0 0.   S      300.000      388.360      1
     0.                     0.                 0.                 0.                      2
     0.                     0.                 -0.50637025E+01    0.28819353E-02          3
     0.84787862E-06         -0.17344967E-08    0.71482629E+03     0.28714074E+02          4

S(L)            J12/65      S 1.   0 0.   0 0.   0 0.   L      388.360      2000.000     1
     0.34036672E+01         0.99C334C5E-03     -0.10114410E-05    0.40516327E-09          2
    -0.84538383E+03         -0.16344708E+02    -0.12706310E+02    0.30725216E-01          3
     0.13070637E-06         -0.35276150E-10    0.12346069E+04     0.36210160E+02          4

S               J12/65      S 1.   00 0.  00 0.   00 0.   G      300.000      5000.000     1
     C.29119165E+01         -0.5609C635E-03    0.28155555E-06     -0.50994812E-10         2
     C.32726267E+05         0.37785044E+01     0.29298157E+01     0.19994083E-03          3
     0.28521102E-08         -0.10656090E-11    0.32686945E+05     0.35000372E+01          4

SH              L12/66      S 1.   E -1.  00 0.   00 0.   G      300.000      5000.000     1
     C.24118653E+01         0.22103303E-03     -0.18939564E-06    0.61886675E-10          2
     0.15375732E+06         0.58861130E+01     0.25088214E+01     -0.42478561E-04         3
    -0.16148749E-09         0.60C12108E-13     0.15373003E+06     0.53857186E+01          4

SF4             J12/69      S 1.   F 4.   0 0.   0 0.   G      300.000      5000.000     1
     C.11101043E+C2         0.21130999E-02     -0.91283093E-06    0.17427082E-09          2
    -C.97712769E+05         -0.28685407E+02    0.24622425E+01     0.33574538E-01          3
     0.25301103E-07         -0.51523829E-11    -0.95780591E+05    0.13841967E+02          4

SF6             J 9/65      S 1.   F 6.   00 0.   00 0.   G      300.000      5000.000     1
     C.15286816E+02         0.41541264E-02     -0.18053249E-05    0.34670689E-09          2
    -0.15234672E+06         -0.55C69472E+02    -0.11646703E+01    0.64060912E-01          3
     0.48264600E-07         -0.98455246E-11    -0.14868151E+06    0.25921767E+02          4

SH              J 6/67      S 1.   H 1.   00 0.   00 0.   G      300.000      5000.000     1
     0.30371382E+01         0.12752466E-02     -0.42314345E-06    0.67719668E-10          2
     0.16545437E+05         0.60722981E+01     0.44098953E+01     -0.22063747E-02         3
     0.16467179E-08         -0.12144787E-11    0.16180734E+05     -0.10226129E+01         4

SN              J 6/61      S 1.   N 1.   00 0.   00 0.   G      300.000      5000.000     1
     0.38493976E+01         0.72756788E-03     -0.29370203E-06    0.55013628E-10          2
     0.30459962E+05         0.44179139E+01     0.39422971E+01     -0.26035515E-02         3
    -0.75168560E-08         0.25591098E-11     0.30563949E+05     0.45669484E+01          4

SO              J12/65      S 1.   O 1.   00 0.   00 0.   G      300.000      5000.000     1
     0.38280162E+C1         0.75993144E-03     -0.30791631E-06    0.57380156E-10          2
    -0.43632695E+03         0.44528198E+01     0.31224222E+01     0.13797342E-02          3
    -0.38700844E-08         0.16366249E-11     -0.17847567E+03    0.84176931E+01          4

SOF2            J 9/65      S 1.   O 1.   F 2.   00 0.   G      300.000      5000.000     1
     0.81678190E+01         0.20156607E-02     -0.86557421E-06    0.16471939E-09          2
    -0.70763942E+05         -0.14145544E+02    0.26905686E+01     0.20314017E-01          3
     0.11328486E-07         -0.16744583E-11    -0.69453573E+05    0.13247064E+02          4

SO2             J 6/61      S 1.   O 2.   00 0.   00 0.   G      300.000      5000.000     1
     C.52451364E+01         0.19704204E-02     -0.80375769E-06    0.15149969E-09          2
    -0.37558227E+05         -0.10873524E+01    0.32665338E+01     0.53217902E-02          3
    -0.52810047E-08         0.25590454E-11     -0.36908148E+05    0.96513476E+01          4

SC2F2           J 3/63      S 1.   O 2.   F 2.   00 0.   G      300.000      5000.000     1
     C.97589416E+01         0.35349972E-02     -0.15103050E-05    0.28648297E-09          2
    -0.10668096E+06         -0.23C29863E+02    0.26823217E+01     0.25219882E-01          3
     C.93820305E-08         -0.44501989E-12    -0.10487605E+06    0.12882633E+02          4

SC3             J 9/65      S 1.   O 3.   00 0.   00 0.   G      300.000      5000.000     1
     0.70757376E+01         0.31763387E-02     -0.13535760E-05    0.25630912E-09          2
    -0.50211376E+05         -0.11200793E+02    0.25780385E+01     0.14556335E-01          3
    -0.74203022E-09         0.19709473E-11     -0.48931753E+05    0.12751863E+02          4

S2              J12/65      S 2.   00 0.   00 0.   00 0.   G      300.000      5000.000     1
     C.42051134E+01         0.35309150E-03     -0.13543069E-06    0.25245375E-10          2
     0.14102908E+05         0.32C94717E+01     0.28724248E+01     0.50434461E-02          3
     0.33097022E-08         -0.57376109E-12    0.14487076E+05     0.98082405E+01          4

SI(S)           J 3/67      SI 1.  00 0.   00 0.   00 0.   S      300.000      1685.000     1
     0.24753989E+01         0.28112187E-03     -0.20939481E-06    0.42757187E-11          2
    -0.81255620E+03         -0.12188747E+02    0.84197538E+00     0.83710416E-02          3
     0.97533603E-08         -0.27279380E-11    -0.52486288E+03    -0.45272678E+01         4

SI(L)           J 3/67      SI 1.  00 0.   00 0.   00 0.   L      1685.000     5000.000     1
     C.32709915E+01         0.                 0.                 0.                      2
     C.40546547E+04         -0.13289281E+02    0.                 0.                      3
     C.                     0.                 0.                 0.                      4
```

```
SI                J 3/67      SI 1.   00 0.   00 0.   G        300.000        5000.000      1
  0.26506014E+01  -0.35763852E-03   0.29592293E-06  -0.72804929E-10   0.57963379E-14   2
  0.53437054E+05   0.52204057E+01   0.31793537E+01  -0.27646092E-02   0.44784028E-05   3
 -0.32833177E-08   0.91713631E-12   0.53339032E+05   0.27273204E+01                   4

SI+               L12/66      SI 1.   E -1.   00 0.   00 0.   G        300.000        5000.000      1
  0.26645138E+01  -0.19505635E-03   0.89017065E-07  -0.17851091E-10   0.13138569E-14   2
  0.14791814E+06   0.46289974E+01   0.39497015E+01  -0.53831622E-02   0.79533565E-05   3
 -0.52417458E-08   0.12637867E-11   0.14765904E+06  -0.15671487E+01                   4

SIC               J 3/67      SI 1.   C  1.   00 0.   00 0.   G        300.000        5000.000      1
  0.55799033E+01  -0.13409344E-02   0.75483047E-06  -0.16543778E-09   0.12663345E-13   2
  0.85046120E+05  -0.56633593E+01  -0.21924696E+01   0.41342700E-01  -0.78274113E-04   3
  0.60694120E-07  -0.16729267E-10   0.85953143E+05   0.28756080E+02                   4

SIC2              J 3/67      SI 1.   C  2.   00 0.   00 0.   G        300.000        5000.000      1
  0.57011523E+01   0.21220690E-02  -0.11457769E-05   0.31038708E-09  -0.27763857E-13   2
  0.72023391E+05  -0.49768951E+01   0.38806333E+01   0.67947767E-02  -0.50277962E-05   3
  0.10573232E-08   0.25513142E-12   0.72558249E+05   0.45374042E+01                   4

SICL              J 9/67      SI 1.   CL 1.   00 0.   00 0.   G        300.000        5000.000      1
  0.44179424E+01   0.13137080E-03  -0.30789013E-07   0.47802942E-11  -0.24135145E-15   2
  0.21650362E+05   0.33226348E+01   0.38247525E+01   0.24969130E-02  -0.36640276E-05   3
  0.25169051E-08  -0.65148061E-12   0.21774076E+05   0.61967573E+01                   4

SICL2             J12/69      SI 1.   CL 2.   0  0.   0  0.   G        300.000        5000.000      1
  0.66562009E+01   0.39225514E-03  -0.16975920E-06   0.30024021E-10  -0.14765027E-14   2
 -0.21865180E+05  -0.43502059E+01   0.42340627E+01   0.10291978E-01  -0.15513731E-04   3
  0.10572099E-07  -0.26771636E-11  -0.21378628E+05   0.73084885E+01                   4

SICL3             J12/69      SI 1.   CL 3.   0  0.   0  0.   G        300.000        5000.000      1
  0.93913634E+01   0.67583523E-03  -0.29385989E-06   0.56056340E-10  -0.39374825E-14   2
 -0.51298469E+05  -0.15758539E+02   0.51253419E+01   0.17930612E-01  -0.26825402E-04   3
  0.18160893E-07  -0.45701854E-11  -0.50431048E+05   0.48235054E+01                   4

SICL4             J 9/67      SI 1.   CL 4.   00 0.   00 0.   G        300.000        5000.000      1
  0.12089655E+02   0.10190735E-02  -0.44167865E-06   0.84481573E-10  -0.59491501E-14   2
 -0.82936052E+05  -0.29540086E+02   0.61040010E+01   0.24923114E-01  -0.36703263E-04   3
  0.24448748E-07  -0.60370155E-11  -0.81705075E+05  -0.98955289E+00                   4

SIF               J12/69      SI 1.   F  1.   0  0.   0  0.   G        300.000        5000.000      1
  0.41433075E+01   0.42824987E-03  -0.16212959E-06   0.29310633E-10  -0.18339280E-14   2
 -0.36327053E+04   0.32628912E+01   0.33086581E+01   0.25106061E-02  -0.13181498E-05   3
 -0.67703843E-09   0.61282750E-12  -0.34002393E+04   0.76058831E+01                   4

SIF2              J12/68      SI 1.   F  2.   0  0.   0  0.   G        300.000        5000.000      1
  0.63359092E+01   0.11232006E-02  -0.51341257E-06   0.10234931E-09  -0.69009282E-14   2
 -0.72721138E+05  -0.42661199E+01   0.29365750E+01   0.11439476E-01  -0.12803853E-04   3
  0.58541337E-08  -0.68518585E-12  -0.71985416E+05   0.11224577E+02                   4

SIF3              J 6/70      SI 1.   F  3.   0  0.   0  0.   G        300.000        5000.000      1
  0.84105118E+01   0.17564832E-02  -0.75509760E-06   0.14362943E-09  -0.10073781E-13   2
 -0.13523389E+06  -0.15189859E+02   0.30581580E+01   0.19504985E-01  -0.21991979E-04   3
  0.10298762E-07  -0.13244718E-11  -0.13395272E+06   0.11596385E+02                   4

SIF4              J 9/63      SI 1.   F  4.   00 0.   00 0.   G        300.000        5000.000      1
  0.10545038E+02   0.27200800E-02  -0.11741279E-05   0.22433362E-09  -0.15803156E-13   2
 -0.19792290E+06  -0.27951944E+02   0.31059749E+01   0.26866992E-01  -0.29186257E-04   3
  0.12074579E-07  -0.13617263E-11  -0.19611327E+06   0.94141918E+01                   4

SIH               J12/69      SI 1.   H  1.   0  0.   0  0.   G        300.000        5000.000      1
  0.30911184E+01   0.14489347E-02  -0.56349951E-06   0.10071335E-09  -0.63679401E-14   2
  0.44302446E+05   0.57808348E+01   0.41309782E+01  -0.35619084E-02   0.76432635E-05   3
 -0.53797081E-08   0.12582731E-11   0.44159598E+05   0.10358455E+01                   4

SIH4              J12/60      SI 1.   H  4.   00 0.   00 0.   G        300.000        5000.000      1
  0.44433856E+01   0.86334212E-02  -0.35060000E-05   0.64194963E-09  -0.43824526E-13   2
  0.18468284E+04  -0.40777748E+01   0.17519579E+01   0.11664482E-01   0.10686376E-05   3
 -0.75058684E-08   0.31097221E-11   0.28880916E+04   0.11303122E+02                   4

SIN               J 3/67      SI 1.   N  1.   00 0.   00 0.   G        300.000        5000.000      1
  0.39858621E+01  -0.87027056E-05   0.54269539E-06  -0.17951017E-09   0.16337069E-13   2
  0.43524809E+05   0.31615156E+01   0.31051955E+01   0.14652449E-02   0.18561060E-05   3
 -0.37734883E-08   0.16835331E-11   0.43785709E+05   0.78753761E+01                   4

SIO               J 9/67      SI 1.   O  1.   00 0.   00 0.   G        300.000        5000.000      1
  0.37478835E+01   0.81591943E-03  -0.32525396E-06   0.57324962E-10  -0.35106944E-14   2
 -0.13317430E+05   0.36478404E+01   0.32528276E+01   0.41823126E-03   0.37806220E-05   3
 -0.51024483E-08   0.19471317E-11  -0.13090340E+05   0.66485803E+01                   4
```

```
SIO2(S)            J 6/67     SI 1.   O  2.   00 0.   00 0.   S      300.000       847.000          1
     0.                     0.                 0.                 0.                 0.                2
     0.                     0.                 0.37282163E+00     0.21562223E-01    -0.14573894E-04   3
    -0.89309879E-08         0.12526015E-10    -0.11048161E+06    -0.28621543E+01                     4

SIO2(S)            J 6/67     SI 1.   O  2.   00 0.   00 0.   S      847.000      1079.000          1
     0.70854710E+01         0.12077507E-02     0.                 0.                 0.                2
    -0.11178740E+06        -0.36198180E+02     0.70854710E+01     0.12077507E-02     0.                3
     0.                     0.                -0.11178740E+06    -0.36198180E+02                     4

SIC2(S)            J 6/67     SI 1.   O  2.   00 0.   00 0.   S     1079.000      1996.000          1
     0.66032385E+01         0.25956500E-02    -0.69075293E-06    -0.17559104E-09     0.82131540E-13   2
    -0.11150871E+06        -0.23656253E+02     0.                 0.                 0.                3
     0.                     0.                 0.                 0.                                   4

SIO2(L)            J 6/67     SI 1.   O  2.   00 0.   00 0.   L     1996.000      5000.000          1
     0.10316204E+02         0.                 0.                 0.                 0.                2
    -0.11460598E+06        -0.57629588E+02     0.                 0.                 0.                3
     0.                     0.                 0.                 0.                                   4

SIC2               J 9/67     SI 1.   O  2.   00 0.   00 0.   G      300.000      5000.000          1
     0.58620395E+01         0.17719784E-02    -0.75194194E-06     0.14180584E-09    -0.98856417E-14   2
    -0.34767816E+05        -0.68603501E+01     0.32628058E+01     0.85016584E-02    -0.57388144E-05   3
     0.12896573E-10         0.97544976E-12    -0.38035971E+05     0.66549123E+01                     4

SIS                J12/60     SI 1.   S  1.   00 0.   00 0.   G      300.000      5000.000          1
     0.41729993E+01         0.39498404E-03    -0.16004802E-06     0.30841978E-10    -0.21886645E-14   2
     0.71885070E+04         0.28342404E+01     0.28507845E+01     0.49835917E-02    -0.59703409E-05   3
     0.30600985E-08        -0.48754490E-12     0.74929393E+04     0.93959024E+01                     4

SI2                J 3/67     SI 2.   00 0.   00 0.   00 0.   G      300.000      5000.000          1
     0.50474139E+01         0.53990034E-03    -0.43078376E-06     0.11355206E-09    -0.96262871E-14   2
     0.69133184E+05        -0.19234578E+01     0.38155393E+01    -0.19096542E-03     0.59233416E-05   3
    -0.57649603E-08         0.14775004E-11     0.69784655E+05     0.57275556E+01                     4

SI2C               J 3/67     SI 2.   C  1.   00 0.   00 0.   G      300.000      5000.000          1
     0.62510988E+01         0.13224176E-02    -0.72805214E-06     0.23269424E-09    -0.23285148E-13   2
     0.67300999E+05        -0.72966415E+01     0.40438938E+01     0.73456957E-02    -0.66412549E-05   3
     0.24885047E-08        -0.18196555E-12     0.62935417E+05     0.41712491E+01                     4

SI2N               J 3/67     SI 2.   N  1.   00 0.   00 0.   G      300.000      5000.000          1
     0.66709912E+01         0.91317882E-03    -0.39517130E-06     0.74397145E-10    -0.50284691E-14   2
     0.45620154E+05        -0.78114415E+01     0.36686735E+01     0.11301840E-01    -0.13637119E-04   3
     0.71688050E-08        -0.12378310E-11     0.46318083E+05     0.71095458E+01                     4

SI3                J 3/67     SI 3.   00 0.   00 0.   00 0.   G      300.000      5000.000          1
     0.74213360E+01        -0.11709948E-03     0.89820775E-07     0.71935964E-11    -0.25670837E-14   2
     0.74146699E+05        -0.10365274E+02     0.45979129E+01     0.10715274E-01    -0.16100422E-04   3
     0.10969207E-07        -0.27832875E-11     0.74766324E+05     0.34421671E+01                     4

XE                 L 4/70     XE 1.   O  0.   0  0.   0  0.   G      300.000      5000.000          1
     0.25000000E+01         0.                 0.                 0.                 0.                2
    -0.74537501E+03         0.61512740E+01     0.25000000E+01     0.                 0.                3
     0.                     0.                -0.74537499E+03     0.61512742E+01                     4

END                                  -0.     -0.     -0.     -0.          -0.          -0.            -0
```

APPENDIX B

CURVE FITTING EQUATIONS FOR DERIVING SRB-II INPUT DATA

A substantial savings in computer time may be realized by using the program options to input curve fitted data for output from the analytical simulation models rather than executing the programs themselves. Examples of these input data are CSCØEF(1), (2), and (3) for the theoretical c* simulation derived from the LEWIS Subroutine; and AK(1), (2), and (3) for theoretical vacuum Isp versus expansion ratio at 1000 psia derived from the LEWIS Subroutine. The c* curve fit coefficients are derived automatically in the Isp modules but the vacuum Isp curve fits are not. Thus, it is necessary for the user to exercise a curve fitting procedure in order to obtain the necessary coefficients for the input data.

Least Squares Second Order Fit

If we choose to represent a set of data (x_i, y_i), where $i = 1,2,3,\ldots,n$, by the same relationship $y = f(x)$, containing r unknown parameters a_1, $a_2, a_3, \ldots, a_r$, and form the deviations as

$$v_i = f(x_i) - y_i$$

Then the sum of the squares of the deviations

$$S \equiv \sum_{i=1}^{n} v_i^2 = \sum_{i=1}^{n} [f(x_i) - y_i]^2$$

is clearly a function of $a_1, a_2, a_3, \ldots, a_r$. We can then determine the a's to that S is a minimum.

Now if $S(a_1, a_2, a_3, \ldots, a_r)$ is a minimum, then at a point in question

$$\frac{\partial S}{\partial a_1} = 0, \frac{\partial S}{\partial a_2} = 0, \frac{\partial S}{\partial a_3} = 0, \ldots, \frac{\partial S}{\partial a_r} = 0 \qquad (1)$$

The set of r equations, (1), called normal equations, serve to determine the r unknown a's in $y = f(x)$. This particular "best-fit" criterion is known as the principle of least squares.

Now for a second degree polynomial fit.

$$y = a_1 + a_2 x + a_3 x^2$$

and

$$v_i = a_1 + a_2 x_i + a_3 x_i^2 - y_i$$

then

$$\frac{\partial v_i}{\partial a_1} = 1, \quad \frac{\partial v_i}{\partial a_2} = x_i, \quad \frac{\partial v_i}{\partial a_3} = x_i^2$$

Since the normal equations for a polynomial take the form

$$\sum_{i=1}^{n} v_i \frac{\partial v_i}{\partial a_k} = 0, \quad k = 1,2,3$$

The normal equations are

$$\sum_{i=1}^{n} (a_1 + a_2 x_i + a_3 x_i^2 - y_i) \cdot 1 = 0$$

$$\sum_{i=1}^{n} (a_1 + a_2 x_i + a_3 x_i^2 - y_i)\, x_i = 0$$

$$\sum_{i=1}^{n} (a_1 + a_2 x_i + a_3 x_i^2 - y_i)\, x_i^2 = 0$$

Collecting the coefficients of a_j

$$na_1 + (\sum_{i=1}^{n} x_i)a_2 + (\sum_{i=1}^{n} x_i^2)a_3 = \sum_{i=1}^{n} y_i \tag{2}$$

$$(\sum_{i=1}^{n} x_i)a_1 + (\sum_{i=1}^{n} x_i^2)a_2 + (\sum_{i=1}^{n} x_i^3)a_3 = \sum_{i=1}^{n} x_i y_i \tag{3}$$

$$(\sum_{i=1}^{n} x_i^2)a_1 + (\sum_{i=1}^{n} x_i^3)a_2 + (\sum_{i=1}^{n} x_i^4)a_3 = \sum_{i=1}^{n} x_i^2 y_i \tag{4}$$

Solving (2), (3) and (4) for a_j,

$$a_3 = \frac{(\Sigma x \Sigma y - n\Sigma xy)(\Sigma x \Sigma x^2 - n\Sigma x^3) - (\Sigma x^2 \Sigma y - n\Sigma x^2 y)[(\Sigma x)^2 - n\Sigma x^2]}{(\Sigma x \Sigma x^2 - n\Sigma x^3)^2 - [(\Sigma x^2)^2 - n\Sigma x^4][(\Sigma x)^2 - n\Sigma x^2]} \tag{5}$$

APPENDIX B (CONTINUED)

$$a_2 = \frac{(\Sigma x \Sigma y - n\Sigma xy) - a_3 (\Sigma x \Sigma x^2 - n\Sigma x^3)}{[(\Sigma x)^2 - n\Sigma x^2]} \tag{6}$$

$$a_1 = \frac{\Sigma y - \Sigma x\ a_2 - \Sigma x^2\ a_3}{n} \tag{7}$$

NOTE: All Σ in equations (5), (6), and (7) are from i=1 to n and variables x and y are subscripted$_i$.

Equations (5), (6) and (7) may be used to derive the required curve fit coefficients.

In cases which require a semi-log to the base e curve fit (AK(10, (11), and (12)), the value of $\log_e (y_i)$ should be substituted in equation (5), (6) and (7) for y_i.