NASA TECHNICAL NOTE

NASA TN D-8515

NASA TN D-8515

AEROELASTIC ANALYSIS FOR ROTORCRAFT IN FLIGHT OR IN A WIND TUNNEL

Wayne Johnson

Ames Research Center

and

Ames Directorate,

U.S. Army Air Mobility R&D Laboratory

Moffett Field, Calif. 94035

NATIONAL AERONAUTICS AND SPACE ADMINISTRATION • WASHINGTON D. C. • JULY 1977

1. Report No.	2. Government Accession No.	3. Recipient's Catalog No.
NASA TN D-8515		

4. Title and Subtitle	5. Report Date
AEROELASTIC ANALYSIS FOR ROTORCRAFT IN FLIGHT OR IN A WIND TUNNEL	July 1977
	6. Performing Organization Code
7. Author(s)	8. Performing Organization Report No.
Wayne Johnson	A-6740
	10. Work Unit No.
9. Performing Organization Name and Address	505-10-22
Ames Research Center, NASA and Ames Directorate, USAAMRDL Ames Research Center, Moffett Field, Calif. 94035	11. Contract or Grant No.
	13. Type of Report and Period Covered
12. Sponsoring Agency Name and Address National Aeronautics and Space Administration, Washington, D. C. 20546 and U.S. Army Air Mobility R&D Laboratory, Moffett Field, Calif. 94035	Technical Note
	14. Sponsoring Agency Code

15. Supplementary Notes

16. Abstract

An analytical model is developed for the aeroelastic behavior of a rotorcraft in flight or in a wind tunnel. A unified development is presented for a wide class of rotors, helicopters, and operating conditions. The equations of motion for the rotor are derived using an integral Newtonian method, which gives considerable physical insight into the blade inertial and aerodynamic forces. The rotor model includes coupled flap-lag bending and blade torsion degrees of freedom, and is applicable to articulated, hingeless, gimballed, and teetering rotors with an arbitrary number of blades. The aerodynamic model is valid for both high and low inflow, and for axial and nonaxial flight. The rotor rotational speed dynamics, including engine inertia and damping, and the perturbation inflow dynamics are included. For a rotor on a wind-tunnel support, a normal mode representation of the test module, strut, and balance system is used. The aeroelastic analysis for the rotorcraft in flight is applicable to a general two-rotor aircraft, including single main-rotor and tandem helicopter configurations, and side-by-side or tilting proprotor aircraft configurations. An arbitrary unaccelerating flight state is considered, with the aircraft motion represented by the six rigid body degrees of freedom and the elastic free vibration modes of the airframe. The rotor model includes rotor-rotor aerodynamic interference and ground effect. The aircraft model includes rotor-fuselage-tail aerodynamic interference, a transmission and engine dynamics model, and the pilot's controls. A constant-coefficient approximation for nonaxial flow and a quasistatic approximation for the low-frequency dynamics are also described. The coupled rotorcraft or rotor and support dynamics are described by a set of linear differential equations, from which the stability and aeroelastic response may be determined.

17. Key Words (Suggested by Author(s))	18. Distribution Statement
Helicopter flight dynamics Helicopter dynamic stability Rotorcraft aeroelasticity	Unlimited STAR Category — 39

19. Security Classif. (of this report)	20. Security Classif. (of this page)	21. No. of Pages	22. Price*
Unclassified	Unclassified	253	$8.50

*For sale by the National Technical Information Service, Springfield, Virginia 22161

TABLE OF CONTENTS

	Page
NOTATION	v
SUMMARY	1
1.0 INTRODUCTION	1
PART I. AEROELASTIC ANALYSIS FOR A ROTOR IN A WIND TUNNEL	5
2.0 ROTOR MODEL	5
2.1 Structural Analysis	5
2.2 Inertia Analysis	12
2.3 Aerodynamic Analysis	48
2.4 Rotor Speed and Engine Dynamics	56
2.5 Inflow Dynamics	58
2.6 Rotor Equations of Motion	65
2.7 Constant Coefficient Approximation	68
3.0 ADDITIONAL DETAILS OF THE ROTOR MODEL	70
3.1 Rotor Orientation	70
3.2 Rotor Trim	72
3.3 Lateral Velocity	73
3.4 Clockwise Rotating Rotor	73
3.5 Blade Bending and Torsion Modes	74
3.6 Lag Damper	77
3.7 Pitch/Bending Coupling	78
3.8 Normalization Parameters	79
4.0 ARBITRARY NUMBER OF BLADES	79
4.1 Four or More Blades	79
4.2 Two-Bladed Rotor	84
4.3 Single-Bladed Rotor	87
5.0 WIND TUNNEL SUPPORT MODEL	87
6.0 COUPLED ROTOR AND SUPPORT MODEL	89
6.1 Rigid Control System	91
6.2 Quasistatic Approximation	91
PART II. AEROELASTIC ANALYSIS FOR A ROTORCRAFT IN FLIGHT	93
7.0 ROTORCRAFT CONFIGURATION	93
7.1 Orientation	93
7.2 Pilot's Controls	97
7.3 Aircraft Trim	97
8.0 AIRCRAFT MODEL	99
8.1 Aircraft Motion	101
8.2 Aerodynamic Interference	105

8.3 Aerodynamic Equations of Motion 105
8.4 Aerodynamic Forces. 106

9.0 ROTOR MODEL DETAILS FOR THE FLIGHT CASE. 108
9.1 Rotor-Rotor Aerodynamic Interference. 108
9.2 Ground Effect 109
9.3 Pitch/Mast-Bending Coupling 110
9.4 Transmission and Engine Dynamics Model. 111
9.5 Rotor Speed Governor. 114

10.0 COUPLED ROTOR AND BODY MODEL 114
10.1 Rigid Control System. 118
10.2 Quasistatic Approximation 118
10.3 Side-by-Side or Tilting Proprotor Configuration 119
10.4 Two-Bladed Rotor Case 119

11.0 CONCLUDING REMARKS 122
11.1 Applications of the Analysis. 122
11.2 Future Development. 122

APPENDIX A. ROTOR INERTIAL AND AERODYNAMIC COEFFICIENTS 125

APPENDIX B. MATRICES OF THE ROTOR EQUATIONS OF MOTION 137

APPENDIX C. AIRCRAFT CONTROL TRANSFORMATION MATRICES. 199

APPENDIX D. MATRICES OF THE AIRCRAFT EQUATIONS OF MOTION. 203

APPENDIX E. AIRCRAFT AERODYNAMIC COEFFICIENTS 211

REFERENCES 221

FIGURES. 223

NOMENCLATURE

a	rotor blade section two-dimensional lift-curve slope
$\vec{a}$	acceleration of point on blade
$\vec{a}_o$	acceleration of hub
C_H	rotor drag force coefficient, $\frac{H}{\rho\pi R^4\Omega^2}$
C_{M_x}	rotor roll-moment coefficient, $\frac{M_x}{\rho\pi R^5\Omega^2}$
C_{M_y}	rotor pitch-moment coefficient, $\frac{M_y}{\rho\pi R^5\Omega^2}$
C_Q	rotor torque coefficient, $\frac{Q}{\rho\pi R^5\Omega^2}$
C_T	rotor thrust coefficient, $\frac{T}{\rho\pi R^4\Omega^2}$
C_Y	rotor side-force coefficient, $\frac{Y}{\rho\pi R^4\Omega^2}$
C_ζ	lag damping coefficient
c	rotor blade chord
c_d	blade section drag coefficient
c_ℓ	blade section lift coefficient
c_m	blade mean chord
D	blade section drag force
EI_{xx}	blade chordwise bending stiffness
EI_{zz}	blade flatwise bending stiffness
F_r	blade section radial aerodynamic force
F_x	blade section inplane aerodynamic force
F_z	blade section out-of-plane aerodynamic force
GJ	blade section torsional stiffness

g	acceleration due to gravity
g_s	structural damping coefficient
I_b	characteristic moment of inertia of blade
I_E	rotational moment of inertia of engine or motor
I_x, I_y, I_z, I_{xz}	aircraft moments of inertia
I_θ	blade section torsional moment of inertia
$\vec{i}, \vec{j}, \vec{k}$	unit vectors of blade principal axis system, including torsion
$\vec{i}_B, \vec{j}_B, \vec{k}_B$	unit vectors of rotating hub plane axis system for mth blade
$\vec{i}_E, \vec{j}_E, \vec{k}_E$	unit vectors of earth axis system
$\vec{i}_F, \vec{j}_F, \vec{k}_F$	unit vectors of body axis system
$\vec{i}_S, \vec{j}_S, \vec{k}_S$	unit vectors of nonrotating hub plane axis system
$\vec{i}_T, \vec{j}_T, \vec{k}_T$	unit vectors of tunnel axis system
$\vec{i}_V, \vec{j}_V, \vec{k}_V$	unit vectors of velocity axis system
$\vec{i}_{XS}, \vec{j}_{XS}, \vec{k}_{XS}$	unit vectors of blade principal axis system, including bending and torsion
$\vec{i}_o, \vec{j}_o, \vec{k}_o$	unit vectors of blade principal axis system, undeformed
K_E	engine shaft torsion spring constant
K_I	interconnect shaft torsion spring constant
K_{M_1}, K_{M_2}, K_M	rotor shaft torsion spring constant
K_{MC_k}, K_{MS_k}	pitch/mast-bending coupling
K_{P_i}	pitch/bending coupling
K_{P_G}	pitch/gimbal coupling
k_P	section modulus weighted radius of gyration
L	blade section lift force
M	moment
M	aircraft mass

M_a	blade section aerodynamic moment
M_k	aircraft free vibration node generalized mass
m	blade section mass per unit length
m	blade index, $m = 1, \ldots, N$
N	number of blades
$p_k^{(m)}$	blade torsion degree of freedom, kth mode of mth blade (p_o is rigid pitch motion)
Q_t	engine throttle torque coefficient
Q_Ω	engine damping coefficient
q	dynamic pressure, $\frac{1}{2}\rho V^2$
$q_k^{(m)}$	blade coupled bending degree of freedom, kth mode of mth blade
q_{s_k}	aircraft body free vibration degrees of freedom (rigid modes are $k = 1, \ldots, 6$ and elastic modes are $k = 7, \ldots, \infty$)
R	rotor blade radius
R_e	transformation matrix between Euler angle rates and inertial angular velocity
R_{FV}	rotation matrix between body axes and velocity axes
R_G	rotation matrix between shaft axes (gust components) and velocity axes
R_{SF}	rotation matrix between shaft axes and body axes
R_{ST}	rotation matrix between shaft axes and tunnel axes
r	blade radial station
r_E	transmission engine/rotor gear ratio
r_{FA}	pitch bearing radial offset
r_{I_1}, r_{I_2}, r_I	transmission rotor/interconnect shaft gear ratio
T	blade tension force; rotor thrust force
T_{CFE}	transformation matrix between pilot's controls and individual aircraft controls
U	blade section resultant velocity

u_G	longitudinal gust velocity
u_P	blade section out-of-plane velocity
u_R	blade section radial velocity
u_T	blade section inplane velocity
V	rotor or aircraft velocity
V_x, V_y, V_z	components of rotorcraft velocity in body axes (F system)
v_G	lateral gust velocity
w_G	vertical gust velocity
x	blade section chordwise variable
x_A	distance aerodynamic center of blade section aft of elastic axis
x_C	distance tension center of blade section behind elastic axis
x_F	aircraft longitudinal displacement degree of freedom
x_{FA}	torque offset
x_h	rotor hub longitudinal displacement
x_I	distance center of gravity of blade section aft of elastic axis
x_o	blade chordwise bending displacement
y_F	aircraft lateral displacement degree of freedom
y_h	rotor hub lateral displacement
z	blade section normal variable
z_F	aircraft vertical displacement degree of freedom
z_{FA}	gimbal undersling
z_h	rotor hub vertical displacement
z_o	blade normal bending displacement
α	blade section angle of attack
α_{HP}	rotor hub plane angle of attack with respect to air
α_x	rotor hub roll displacement

α_y	rotor hub pitch displacement
α_z	rotor hub yaw displacement
β_G	gimbal degree of freedom (rotating frame)
β_{GC}	gimbal pitch degree of freedom
β_{GS}	gimbal roll degree of freedom
β_T	teetering rotor blade flap degree of freedom
$\beta^{(k)}_{o,nc,ns,N/2}$	degrees of freedom of kth bending mode of rotor in nonrotating frame
γ	blade Lock number, $\frac{\rho a c_m R^4}{I_b}$
$\vec{\gamma}_k(\vec{r})$	aircraft free vibration rotation mode shape
δ_{FA_1}	hub precone angle
δ_{FA_2}	blade droop angle, outboard of pitch bearing
δ_{FA_3}	blade sweep angle, outboard of pitch bearing
δ_{FA_4}	feathering axis droop angle
δ_{FA_5}	feathering axis sweep angle
δ_a	aircraft aileron deflection
δ_c	lateral cyclic stick position
δ_e	aircraft elevator deflection
δ_f	aircraft flaperon deflection
δ_p	pedal position
δ_r	aircraft rudder deflection
δ_s	longitudinal cyclic stick position
δ_t	throttle position
δ_o	collective stick position
$\vec{\eta}_k$	kth blade bending mode shape
θ	blade section pitch angle

$\tilde{\theta}$	perturbation of blade pitch
θ^c	command root pitch of blade
θ^o	blade root pitch
θ_{coll}	collective pitch angle
θ_{con}	pitch control input
θ_e	blade elastic pitch deflection
θ_F	aircraft pitch angle degree of freedom
θ_{FP}	aircraft flight path pitch angle
θ_{FT}	aircraft trim pitch angle
θ_t	engine throttle control variable
θ_{tw}	blade built-in twist
$\theta_{o,nc,ns,N/2}$	degrees of freedom of kth torsion mode of rotor in nonrotating frame
κ_f	forward flight-induced flow empirical factor
κ_h	hover-induced inflow empirical factor
λ	rotor inflow ratio
$\lambda,\lambda_x,\lambda_y$	rotor inflow perturbation variables
$\lambda_w,\lambda_H,\lambda_v$	airframe/rotor aerodynamic interference variables
μ	rotor advance ratio
μ_x,μ_y,μ_z	components of rotor velocity in shaft axes
ν_G	gimbal natural frequency
ν_k	natural frequency of kth blade bending mode
ν_T	teetering natural frequency
ξ_k	kth torsion mode shape of blade
$\vec{\xi}_k(\vec{r})$	aircraft free vibration displacement mode shape
ρ	air density

σ	rotor solidity ratio
σ_{rr}	blade axial stress
ϕ	inflow angle of blade section
ϕ_F	aircraft roll angle degree of freedom
ϕ_{FT}	aircraft trim roll angle
ϕ_x, ϕ_z	rotation of blade section due to bending
ψ	rotor azimuth; dimensionless time variable
ψ_e	engine shaft azimuth perturbation degree of freedom
ψ_F	aircraft yaw angle degree of freedom
ψ_{FP}	aircraft flight-path yaw angle
ψ_m	azimuth of mth blade
ψ_s	rotor azimuth perturbation degree of freedom
ω_k	natural frequency of kth torsion mode of blade
ω_k	aircraft free vibration natural frequency
ω_θ	rigid pitch natural frequency of blade
$\vec{\omega}_o$	angular velocity of hub
Ω	rotor rotational speed
$(\dot{\ })$	time derivative
$(\ )'$	derivative with respect to r
$(\ )^*$	normalized quantity

Subscripts

AC	aerodynamic center
CG	center of gravity
EA	elastic axis
FA	feathering axis
HT	horizontal tail

TC	tension center
VT	vertical tail
WB	wing-body

AEROELASTIC ANALYSIS FOR ROTORCRAFT IN FLIGHT OR IN A WIND TUNNEL

Wayne Johnson

Ames Research Center, NASA
and
Ames Directorate, USAAMRDL

SUMMARY

An analytical model is developed for the aeroelastic behavior of a rotorcraft in flight or in a wind tunnel. A unified development is presented for a wide class of rotors, helicopters, and operating conditions. The equations of motion for the rotor are derived using an integral Newtonian method, which gives considerable physical insight into the blade inertial and aerodynamic forces. The rotor model includes coupled flap-lag bending and blade torsion degrees of freedom, and is applicable to articulated, hingeless, gimballed, and teetering rotors with an arbitrary number of blades. The aerodynamic model is valid for both high and low inflow, and for axial and nonaxial flight. The rotor rotational speed dynamics, including engine inertia and damping, and the perturbation inflow dynamics are included. For a rotor on a wind-tunnel support, a normal mode representation of the test module, strut, and balance system is used. The aeroelastic analysis for the rotorcraft in flight is applicable to a general two-rotor aircraft, including single main-rotor and tandem helicopter configurations, and side-by-side or tilting proprotor aircraft configurations. An arbitrary unaccelerating flight state is considered, with the aircraft motion represented by the six rigid body degrees of freedom and the elastic free vibration modes of the airframe. The rotor model includes rotor-rotor aerodynamic interference and ground effect. The aircraft model includes rotor-fuselage-tail aerodynamic interference, a transmission and engine dynamics model, and the pilot's controls. A constant-coefficient approximation for nonaxial flow and a quasistatic approximation for the low-frequency dynamics are also described. The coupled rotorcraft or rotor and support dynamics are described by a set of linear differential equations, from which the stability and aeroelastic response may be determined.

1.0 INTRODUCTION

The testing of rotorcraft in flight or in a wind tunnel requires a consideration of the coupled aeroelastic stability of the rotor and airframe, or the rotor and support system. Even when the primary purpose of the test is to measure the rotor performance, experience shows that the question of dynamic stability may be ignored only at the risk of catastrophic failure of the aircraft. Moreover, in the development of advanced rotor systems, the measurement and verification of the dynamic stability are themselves major goals of the test. Thus it is most desirable to have an analytical model of the

rotorcraft or rotor and support dynamics, both for pretest predictions and posttest correlations. Such a model is also applicable in investigations of isolated rotor aeroelasticity or helicopter flight dynamics. Furthermore, an analytical model for the rotorcraft is required as the basis for more extensive investigations of the aeroelastic behavior, such as automatic control system design. The principal limitation of the analyses available in the literature is that they are not applicable to a wide class of rotorcraft. Typically, aeroelastic stability analyses have been developed in response to a concern with some specific dynamic problem, and thus are suitable only for a particular type of rotor or a limited range of operating conditions. Often the model does not include the entire aircraft or does not consider the rotor shaft motion at all. This report presents the unified development of an aeroelastic analysis for a wide class of rotors and rotorcraft. A thorough documentation of the analytical model is required to interpret the results of past and future investigations of rotorcraft dynamic behavior using this model.

The usefulness of an analysis depends on its ability to handle a large class of problems; therefore, the scope of the aeroelastic model developed here is kept as wide as possible. The rotor model is applicable to articulated, hingeless, gimballed, and teetering rotors with an arbitrary number of blades (including two-bladed rotors). This generality is accomplished by using a modal representation for the blade coupled flap and lag motion, with a gimbal or teeter hinge included in the hub from the beginning of the analysis. Then an articulated or hingeless rotor may be modeled by dropping the gimbal degrees of freedom and using the modes of a hinged or cantilever blade, respectively. For a gimballed (or teetering) rotor, the gimbal degrees of freedom are retained, with cantilever modes for the blade bending motion. The description of the blade motion includes rigid pitch deflection due to control-system flexibility and elastic torsion modes. The rotor model also includes the rotational speed dynamics (with the effects of engine inertia and damping) and perturbation inflow dynamics to account for the unsteady aerodynamics of the rotor.

The aeroelastic analysis of the rotorcraft in flight is applicable to a general two-rotor aircraft, including single main-rotor and tandem helicopter configurations and side-by-side or tilting proprotor aircraft configurations. An arbitrary, unaccelerated equilibrium flight state is considered, with the aircraft motion represented by the six rigid body degrees of freedom and the elastic free vibration modes of the airframe. The rotor model for the aircraft in flight includes rotor-rotor aerodynamic interference and ground effect. The aircraft model includes rotor-fuselage-tail aerodynamic interference, a transmission and engine dynamics model, and the pilot's controls.

In part I, the rotor model is derived and also the model for the coupled rotor and wind-tunnel support dynamics. The equations of motion for the rotor are developed using an integral Newtonian method rather than the more common Lagrangian or differential Newtonian methods. The integral Newtonian approach allows greater use of engineering experience in deriving the equations and provides considerable physical insight into the inertial and aerodynamic forces of the rotor blade. By introducing a vector representation of the

coupled flap/lag bending displacement, a very compact form is obtained for the blade bending equations of motion. In part II, the aeroelastic analysis for the rotor craft in flight is derived. The coupled rotorcraft or rotor and support dynamics are described by a set of linear differential equations, from which the stability and aeroelastic response may be determined.

PART I. AEROELASTIC ANALYSIS FOR A ROTOR IN A WIND TUNNEL

The development of the aeroelastic analysis for a helicopter rotor and a wind-tunnel support (fig. 1) begins with a consideration of the rotor model in section 2. The structural, inertial, and aerodynamic forces on the blade are derived, followed by a consideration of the engine dynamics and the rotor inflow model. Then the equations of motion for the rotor are presented for a three-bladed rotor. Section 3 discusses further some details of the rotor model; section 4 extends the analysis to an arbitrary number of blades. In section 5, the support equations of motion are presented. Finally, in section 6, the rotor and support equations are combined to construct the equations of motion for the coupled system. Note that, although the analysis begins with dimensional quantities, in the final equations all parameters are dimensionless, based on air density ρ, rotor rotational speed Ω, and rotor radius R.

2. ROTOR MODEL

This section develops the aeroelastic analysis of the helicopter rotor. The rotor motion is represented by the following degrees of freedom: coupled flap and lag bending modes, rigid pitch motion (due to control-system flexibility), blade elastic torsion modes, rotor rotational speed perturbation, and gimball or teetering hinge motion (when required). The six components of the rotor shaft linear and angular motion are included, as well as the rotor blade pitch control. Three components of aerodynamic gusts are included as external disturbances. The rotor hub and root representation includes: precone, droop, and sweep; pitch bearing radial offset; feathering axis droop and sweep; and gimbal undersling and torque offset. Chordwise offsets of the blade center of gravity, aerodynamic center, and tension center are included in the blade representation. The undeformed elastic axis of the blade is assumed to be a straight line. The rotor aerodynamic model is generally valid for high and low inflow and for axial and nonaxial flight. The effects of reverse flow, compressibility, and static stall are included.

The linear differential equations describing the motion of the three-bladed rotor are presented in matrix form, together with equations for the forces and moments acting on the rotor hub. Two cases are considered: axial flow, which is a constant coefficient system, and nonaxial flow, which is a periodic coefficient system. Also, in section 2.7, a constant coefficient approximation for the nonaxial flow equations, using the mean values of the coefficients in the nonrotating frame, is derived. The development of the rotor model begins with the analysis of the blade structural moments.

2.1 Structural Analysis

The structural analysis consists of an engineering beam theory model for the coupled flap/lag bending and torsion of a rotor blade with large pitch and

twist. A high aspect ratio (of the structural elements) is assumed, so the beam model is applicable. The objective is to relate the bending moments at the section, and the torsion moment, to the blade deflection and elastic torsion at that section. The analysis follows the work of references 1 to 3.

2.1.1 Geometry- The basic assumptions are that an elastic axis exists, and the undeformed elastic axis is a straight line; and that the blade has a high aspect ratio (of the structural elements), so engineering beam theory applies. Figure 2 shows the geometry of the undeformed blade. The span variable r is measured from the center of rotation along the straight elastic axis. The section coordinates x and z are the principal axes of the section, with the origin at the elastic axis. Then, by definition, $\int_{section}(xz)dA = 0$. Really, the integral is over the tension-carrying elements, that is, a modulus weighted integral: $\int xzE\ dA = 0$. This remark holds for all section integrals in the structural analysis. The tension center (modulus weighted centroid) is on the x axis, at a distance x_C aft of the elastic axis: $\int x\ dA = x_C A$ and $\int z\ dA = 0$. Again, these are modulus weighted integrals. If E is uniform over the section, then x_C is the area centroid. If the section mass distribution is the same as the E distribution, then the tension center coincides with the section center of gravity.

The angle of the major principal axis (x axis) with respect to the hub plane is θ. The existence of the elastic axis means that elastic twist about the elastic axis occurs without bending. Generally, the elastic torsion deflection will be included in θ. The blade pitch bearing is at the radial station r_{FA}. The blade pitch is described by root pitch $\theta°$ (rigid pitch about the feathering axis, including that due to the elastic distortion of the control system), built-in twist θ_{tw}, and elastic torsion about the elastic axis θ_e. So $\theta = \theta° + \theta_{tw} + \theta_e$, where $\theta°(\psi)$ is the root pitch, $\theta(r_{FA}) = \theta°$; $\theta_{tw}(r)$ is the built-in twist, $\theta_{tw}(r_{FA}) = 0$; and $\theta_e(r,\psi)$ is the elastic torsion, $\theta_e(r_{FA},\psi) = 0$. There is shear stress in the blade due to θ_e only. It is assumed that θ_e is small, but $\theta°$ and θ_{tw} are allowed to be large.

The unit vectors in the rotating hub plane axis system are $\vec{i}_B$, $\vec{j}_B$, and $\vec{k}_B$ (fig. 2). The unit vectors for the principal axes of the section (x,r,z) are $\vec{i}$, $\vec{j}$, and $\vec{k}$; these vectors are for no bending, but include the elastic torsion in the pitch angle θ. So the principal unit vectors are rotated by θ from the hub plane:

$$\vec{i} = \vec{i}_B \cos\theta - \vec{k}_B \sin\theta$$

$$\vec{j} = \vec{j}_B$$

$$\vec{k} = \vec{i}_B \sin\theta + \vec{k}_B \cos\theta$$

2.1.2 Description of bending- Now the engineering beam theory assumption is introduced: plane sections perpendicular to the elastic axis remain so after the blade bends. Figure 3 shows the geometry of the deformed section. The deformation of the blade is described by (a) deflection of the elastic axis, x_o, r_o, and z_o; (b) rotation of the section due to bending, by

ϕ_x and ϕ_z; and (c) twist about the elastic axis, θ_e, which is implicit in $\vec{i}$ and $\vec{k}$. The quantities x_o, r_o, z_o, ϕ_x, ϕ_z, and θ_e are assumed to be small.

The unit vectors of the unbent cross section are $\vec{i}$, $\vec{j}$, and $\vec{k}$. The unit vectors of the deformed cross section are $\vec{i}_{XS}$, $\vec{j}_{XS}$, and $\vec{k}_{XS}$, where $\vec{i}_{XS}$ and $\vec{k}_{XS}$ are the principal axes of the section and $\vec{j}_{XS}$ is tangent to the deformed elastic axis. It follows then that

$$\vec{i}_{XS} = \vec{i} + \phi_z\vec{j}$$
$$\vec{j}_{XS} = \vec{j} - \phi_z\vec{i} + \phi_x\vec{k}$$
$$\vec{k}_{XS} = \vec{k} - \phi_x\vec{j}$$

Now, by definition, $\vec{j}_{XS} = d\vec{r}/ds$, where $\vec{r} = x_o\vec{i} + (r + r_o)\vec{j} + z_o\vec{k}$ and s is the arclength along the deformed elastic axis. Hence, to first order,

$$\vec{j}_{XS} = \vec{j} + (x_o\vec{i} + z_o\vec{k})'$$
$$= \vec{j} + (x_o' + z_o\theta')\vec{i} + (z_o' - x_o\theta')\vec{k}$$

It follows that the rotation of the section is

$$-\phi_z = x_o' + z_o\theta'$$
$$\phi_x = z_o' - x_o\theta'$$

or

$$\phi_x\vec{i} + \phi_z\vec{k} = (z_o\vec{i} - x_o\vec{k})'$$

The undeflected position of the blade element is $\vec{r} = r\vec{j} + x\vec{i} + z\vec{k}$, and the deflection position is

$$\vec{r} = (r + r_o)\vec{j} + x_o\vec{i} + z_o\vec{k} + x\vec{i}_{XS} + z\vec{k}_{XS}$$
$$= r\vec{j} + x_o\vec{i} + r_o\vec{j} + z_o\vec{k} + (x\phi_z - z\phi_x)\vec{j} + x\vec{i} + z\vec{k}$$

The first term in the deflected position is the radial station, the next three terms are the deflection of the elastic axis, the next term is the rotation of the section, and the final two terms are the location of the point on the cross section. For now, the elastic extension r_o is neglected. The strain analysis is simplified since then, to first order, $s = r$; r_o just gives a uniform strain over the section, which may be reintroduced later.

2.1.3 Analysis of strain- The fundamental metric tensor g_{mn} of the undistorted blade is defined by

$$(ds)^2 = d\vec{r} \cdot d\vec{r}$$

$$= \left(\frac{\partial \vec{r}}{\partial x_m} dx_m\right) \cdot \left(\frac{\partial \vec{r}}{\partial x_n} dx_n\right)$$

$$= g_{mn}\, dx_m\, dx_n$$

where ds is the differential length in the material and x_m are general curvilinear coordinates. Similarly, the metric tensor G_{mn} of the deformed blade is

$$(dS)^2 = d\vec{R} \cdot d\vec{R}$$

$$= \left(\frac{\partial \vec{R}}{\partial x_m} dx_m\right) \cdot \left(\frac{\partial \vec{R}}{\partial x_n} dx_n\right)$$

$$= G_{mn}\, dx_m\, dx_n$$

Then the strain tensor γ_{mn} is defined by the differential length increment:

$$2\gamma_{mn}\, dx_m\, dx_n = (dS)^2 - (ds)^2$$

or

$$\gamma_{mn} = \frac{1}{2}\,(G_{mn} - g_{mn})$$

For engineering beam theory, only the axial components of the strain and stress are required. (For a full exposition of the analysis of strain, see ref. 2.)

The metric of the undeformed blade (no bending and no torsion, so $\theta' = \theta'_{tw}$) is obtained from the undistorted position vector $\vec{r} = x\vec{i} + r\vec{j} + z\vec{k}$, giving

$$g_{rr} = \frac{\partial \vec{r}}{\partial r} \cdot \frac{\partial \vec{r}}{\partial r} = 1 + \theta'^2_{tw}(x^2 + z^2)$$

The metric of the deformed blade, including bending and torsion, is similarly obtained from the position vector $\vec{r} = (x + x_o)\vec{i} + (r + x\phi_z - z\phi_x)\vec{j} + (z + z_o)\vec{k}$, giving

$$G_{rr} = \frac{\partial \vec{r}}{\partial r} \cdot \frac{\partial \vec{r}}{\partial r} = (1 + x\phi'_z - z\phi'_x)^2 + [x'_o + \theta'(z + z_o)]^2 + [z'_o - \theta'(x + x_o)]^2$$

Then the axial component of the strain tensor is

$$\gamma_{rr} = \frac{1}{2}(G_{rr} - g_{rr})$$

$$= \frac{1}{2}\Big\{(1 + x\phi_z' - z\phi_x')^2 - 1 + [x_o' + \theta'(z + z_o)]^2$$

$$- \theta_{tw}'^2 z^2 + [z_o' - \theta'(x + x_o)]^2 - \theta_{tw}'^2 x^2\Big\}$$

The linear strain (for small x_o, z_o, θ_e, ϕ_x, and ϕ_z) is

$$\gamma_{rr} \cong \varepsilon_{rr} = x\phi_z' - z\phi_x' + \theta_{tw}'^2(xx_o + zz_o) + \theta_{tw}'[zx_o' - xz_o' + \theta_e'(x^2 + z^2)]$$

The strain due to the blade tension, ε_T, is a constant such that the tension is given by the integral over the blade section:

$$T = \int E\varepsilon_{rr}\, dA = \varepsilon_T \int E\, dA$$

Substituting for ε_{rr} and using the results $\int z\, dA = 0$, $\int x\, dA = x_C A$, and $\int(x^2 + z^2)dA = I_P = k_P{}^2 A$ (where k_P is the modulus weighted radius of gyration about the elastic axis) gives

$$\varepsilon_T = \frac{T}{EA} = \phi_z' x_C + \theta_{tw}'^2 x_o x_C - \theta_{tw}' z_o' x_C + \theta'\theta_e' k_P^2 + r_o'$$

In this expression, the strain due to the blade extension r_o has been included. It follows that the strain may be written:

$$\varepsilon_{rr} = \varepsilon_T + (x - x_C)(\phi_z' - \theta_{tw}'\phi_x) - z(\phi_x' + \theta_{tw}'\phi_z) + \theta_{tw}'\theta_e'(x^2 + z^2 - k_P^2)$$

2.1.4 Section moments- To find the moments on the section, the second engineering beam theory assumption is introduced: all stresses except σ_{rr} are negligible. The axial stress is given by $\sigma_{rr} = E\varepsilon_{rr}$. The direction of σ_{rr} is

$$\hat{e} = \frac{\partial\vec{r}/\partial r}{|\partial\vec{r}/\partial r|}$$

The moment on the deformed cross section (fig. 4) is $\vec{M} = M_x\vec{i}_{XS} + M_r\vec{j}_{XS} + M_z\vec{k}_{XS}$. The moment about the elastic axis due to the elemental force $\sigma_{rr}\, dA$ on the cross section is

$$d\vec{M} = (x\vec{i}_{XS} + z\vec{k}_{XS}) \times (\sigma_{rr}\hat{e})dA$$

$$= [-z\vec{i}_{XS} + x\vec{k}_{XS} + \theta_{tw}'(x^2 + z^2)\vec{j}_{XS}]\sigma_{rr}\, dA$$

Integrating over the blade section yields the result for the total moments due to bending and elastic torsion:

$$(M_x)_{EA} = -\int_{section} z\sigma_{rr}\, dA$$

$$(M_z)_{EA} = \int_{section} x\sigma_{rr}\, dA$$

$$M_r = GJ\theta_e' + \int_{section} (x^2 + z^2)\theta_{tw}'\sigma_{rr}\, dA$$

To M_r has been added the torsion moment $GJ\theta_e'$, due to shear stresses produced by elastic torsion. These moments are about the elastic axis. For bending, it is more convenient to work with moments about the tension center x_C:

$$M_x = -\int z\sigma_{rr}\, dA$$

$$M_z = \int (x - x_C)\sigma_{rr}\, dA$$

Substituting for σ_{rr} and integrating yields the following moments:

$$M_x = EI_{zz}(\phi_x' + \theta'\phi_z) - \theta'\theta_e' EI_{ZP}$$

$$M_z = EI_{xx}(\phi_z' - \theta'\phi_x) + \theta'\theta_e' EI_{XP}$$

$$M_r = (GJ + k_P^2 T + \theta'^2 EI_{PP})\,\theta_e' + \theta_{tw}' k_P^2 T$$

$$+ \theta'[EI_{XP}(\phi_z' - \theta'\phi_x) - EI_{ZP}(\phi_x' + \theta'\phi_z)]$$

where

$$I_{zz} = \int z^2\, dA$$

$$I_{xx} = \int (x - x_C)^2\, dA$$

$$I_P = k_P^2 A = \int (x^2 + z^2)\, dA$$

$$I_{XP} = \int (x - x_P)(x^2 + z^2)\, dA$$

$$I_{ZP} = \int z(x^2 + z^2)\, dA$$

$$I_{PP} = \int (x^2 + z^2 - k_P^2)^2\, dA$$

The integrals are all over the tension-carrying elements, of course (i.e., modulus weighted). The tension T acts at the tension center x_C; hence the bending moments about the elastic axis may be obtained from those about the tension center by $(M_z)_{EA} = M_z + x_C T$ and $(M_x)_{EA} = M_x$. The bending/torsion structural coupling is due to EI_{XP} and EI_{ZP}. For a symmetrical section, $EI_{ZP} = 0$.

2.1.5 Vector formulation- Define the section bending moment vector $\vec{M}_E^{(2)}$ and the flap/lag deflection $\vec{w}$ as:

$$\vec{M}_E^{(2)} = M_x\vec{i} + M_z\vec{k}$$

$$\vec{w} = z_o\vec{i} - x_o\vec{k}$$

$\vec{M}_E^{(2)}$ is not quite the moment on the section because M_x and M_z are really the $\vec{i}_{XS}$ and $\vec{k}_{XS}$ components of the moment.) The derivatives of $\vec{w}$ are

$$(z_o\vec{i} - x_o\vec{k})' = (z_o' - x_o\theta')\vec{i} - (x_o' + z_o\theta')\vec{k}$$

$$= \phi_x\vec{i} + \phi_z\vec{k}$$

$$(z_o\vec{i} - x_o\vec{k})'' = (\phi_x' + \theta'\phi_z)\vec{i} + (\phi_z' - \theta'\phi_x)\vec{k}$$

Then the result for the bending and torsion moments may be written:

$$\vec{M}_E^{(2)} = (EI_{zz}\vec{i}\vec{i} + EI_{xx}\vec{k}\vec{k}) \cdot (z_o\vec{i} - x_o\vec{k})'' + \theta_{tw}'\theta_e'(EI_{XP}\vec{k} - EI_{ZP}\vec{i})$$

$$M_r = (GJ + k_P^2T + \theta_{tw}'^2EI_{PP})\theta_e' + \theta_{tw}'k_P^2T + \theta_{tw}'(EI_{XP}\vec{k} - EI_{ZP}\vec{i}) \cdot (z_o\vec{i} - x_o\vec{k})''$$

This is the result sought here, namely, the relation between the structural moments and the deflections of the rotor blade.

Writing the bending stiffness dyadic as $EI = EI_{zz}\vec{i}\vec{i} + EI_{xx}\vec{k}\vec{k}$, and neglecting (for this paragraph only) the bending/torsion coupling terms (EI_{ZP} and EI_{XP}) gives

$$\vec{M}_E^{(2)} = EI\vec{w}''$$

$$M_r = GJ_{eff}\theta_e' + k_P^2T\theta_{tw}'$$

In this form, our result appears as a simple extension of the engineering beam theory result for uncoupled bending and torsion (for $\theta_{tw}' = 0$). The vector form allows a simultaneous treatment of the coupled inplane and out-of-plane bending of the blade, with considerable simplification of the equations as a consequence.

This relation between the moments and deflections is a linearized result. Thus the vectors $\vec{i}$ and $\vec{k}$ appearing in EI and in $\vec{w}$ are based on the trim pitch angle $\theta = \theta^\circ + \theta_{tw}$. The perturbations of $\vec{i}$ and $\vec{k}$ due to the elastic torsion give second-order moments, which have already been neglected in the derivation. The net torsion modulus is

$$GJ_{eff} = GJ + k_p{}^2T + \theta_{tw}'^2 EI_{PP}$$

where $T = \Omega^2 \int_r^1 \rho m \, d\rho$ is the centrifugal tension in the blade. For the elastic torsion stiffness characteristic of rotor blades, the GJ term usually dominates. The $k_p{}^2T$ term is only important near the root for blades that are very soft torsionally. The $\theta_{tw}'^2 EI_{PP}$ term is important only for very soft, highly twisted blades.

2.2 Inertia Analysis

This section derives the inertia forces of a helicopter rotor blade. The blade motion considered includes coupled flap/lag bending (including the rigid modes if the blade is articulated), rigid pitch, elastic torsion, gimbal pitch and roll (which are dropped from the model for articulated and hingeless rotors), and the rotational speed perturbation. The geometric model of the blade and hub includes precone, droop, and sweep; pitch bearing radial offset; feathering axis droop and sweep; and torque offset and gimbal undersling.

2.2.1 Rotor geometry- Consider an N-bladed rotor, rotating at speed Ω (fig. 5). The mth blade is at the azimuth location:

$$\psi_m = \psi + m\Delta\psi \ , \qquad m = 1, \ldots, N$$

where $\Delta\psi = 2\pi/N$, and $\psi = \Omega t$ is a dimensionless time variable. The S coordinate system ($\vec{i}_S$, $\vec{j}_S$, $\vec{k}_S$) is a nonrotating, inertial reference frame. The S system coordinates are the rotor shaft axes when there is no hub motion. When the shaft moves, however, due to the motion of the helicopter or the wind tunnel support, the S system remains fixed in space. The B system ($\vec{i}_B$, $\vec{j}_B$, $\vec{k}_B$) is a coordinate frame rotating with the mth blade. The acceleration, angular velocity, and angular acceleration of the hub, and the forces and moments exerted by the rotor on the hub are defined in the nonrotating frame (S system). Figure 6(a) shows the definition of the linear and angular motion of the rotor hub; figure 6(b) shows the definition of the rotor forces and moments action on the hub. The rotor blade equations of motion are derived in the rotating frame.

Figure 7 shows the blade hub and root geometry considered (undistorted). The origin of the B and S systems is the location of the gimbal. For articulated or hingeless rotors, where there is no gimbal, this is simply the point where the shaft motion and hub forces are evaluated. The hub of the rotor is a distance z_{FA} below the gimbal (gimbal undersling, which is not shown in fig. 7). The torque offset x_{FA} is positive in the $-\vec{i}_B$ direction. The azimuth ψ_m is measured to the feathering axis line (its projection in the hub plane), so the feathering axis is parallel to the $\vec{j}_B$ axis and offset

x_{FA} from the center of rotation. The precone angle δ_{FA_1} gives the orientation of the blade elastic axis inboard of the pitch bearing with respect to the hub plane; δ_{FA_1} is positive upward, and is assumed to be a small angle. The pitch bearing is offset radially from the center of rotation by r_{FA}. The rigid pitch rotation of the blade about the feathering axis occurs at r_{FA}. The droop angle δ_{FA_2} and the sweep angle δ_{FA_3} occur at r_{FA}, just outboard of the pitch bearing; δ_{FA_2} and δ_{FA_3} give the orientation of the elastic axis of the blade outboard of the pitch bearing, with respect to the precone. Both δ_{FA_2} and δ_{FA_3} are assumed to be small angles; δ_{FA_2} is positive downward and δ_{FA_3} is positive aft. Feathering axis droop δ_{FA_4} and sweep δ_{FA_5} define the orientation of the feathering axis with respect to the precone; δ_{FA_4} is positive downward, δ_{FA_5} is positive aft, and both are small angles. If $\delta_{FA_4} = \delta_{FA_5} = 0$, then the feathering axis orientation is just given by the precone; if $\delta_{FA_4} = \delta_{FA_2}$ and $\delta_{FA_5} = \delta_{FA_3}$, then the orientation is the same as the outboard elastic axis.

In summary, the blade root is underslung by z_{FA} and offset by x_{FA} relative to the gimbal. From the root to the pitch bearing, there is a shank, of length r_{FA}, which undistorted is a straight line at an angle δ_{FA_1} to the hub plane (small precone). The blade outboard of the pitch bearing at r_{FA}, undistorted, has a straight elastic axis, with small droop and sweep (δ_{FA_2} and δ_{FA_3}). The feathering axis also has small droop and sweep with respect to the precone (δ_{FA_4} and δ_{FA_5}). The shank (inboard of the pitch bearing at r_{FA}) and the blade (outboard of r_{FA}) are flexible in bending. The shank is assumed to be rigid in torsion; the blade outboard of the pitch bearing is flexible in torsion as well as bending. There is rigid pitch rotation of the blade about the pitch bearing, which takes place about the local direction of the feathering axis at r_{FA}, including the bending of the shank. Incorporation of the bending flexibility of the blade inboard of the pitch bearing means that general rotor configurations may be considered — an articulated rotor with the feathering axis inboard or outboard of the hinges or a cantilever blade with or without flexibility inboard of the pitch bearing. The special case of a rigid shank can be considered as well, of course.

Figure 8 shows the undeformed geometry of the blade. The description of the blade for the inertial analysis parallels that for the structural analysis (see fig. 2 and section 2.1.1). It is assumed that an elastic axis exists, that the undeformed elastic axis is a straight line, and that the blade has a high aspect ratio, so engineering beam theory and lifting line theory are applicable. Here x_I is the locus of the section center of gravity, x_A is the locus of the section aerodynamic center, and x_C is the locus of the section tension center. The distances x_I, x_A, and x_C are positive aft, measured from the elastic axis; generally, they are a function of r. The corresponding z displacements are neglected.

The $\vec{i}_o$, $\vec{j}_o$, and $\vec{k}_o$ coordinate system is the elastic axis/principal axis system of the section. Subscript o refers to the undeformed frame, that is, with no elastic torsion in θ, or gimbal or rotor speed degrees of freedom. The direction of the undeformed elastic axis is $\vec{j}_o$; $\vec{i}_o$ and $\vec{k}_o$ are the directions of the local principal axes of the undeformed section. The

spanwise variable is r, measured from the center of rotation. This variable is dimensionless, so $r = 1$ at the blade tip. The section coordinates x and z are mass principal axes, with origin at the elastic axis. It is assumed that the directions of the mass principal axes and the modulus principal axes are the same. The CG is at $z = 0$ and $x = x_I$. The section mass, center of gravity position, and section polar moment of inertia (about the elastic axis) are, by definition, then as follows:

$$\int_{section} dm = m$$

$$\int_{section} z\, dm = \int_{section} xz\, dm = 0$$

$$\int_{section} x\, dm = x_I m$$

$$\int_{section} (x^2 + z^2) dm = I_\theta$$

The blade pitch angle is θ (at this stage in the analysis, the undistorted or mean pitch, denoted by subscript m). The angle θ is measured from the hub plane to the section principal axis. It is thus the angle of rotation of $\vec{i}_o$ and $\vec{k}_o$ from the hub plane axes. The undeformed pitch angle consists of the collective pitch θ_{coll} plus the builtin twist $\theta_{tw}(r)$: $\theta = \theta_m = \theta_{coll} + \theta_{tw}$. We define θ_{coll} as the pitch at r_{FA}, so $\theta_{tw}(r_{FA}^+) = 0$. The root pitch is then $\theta° = \theta_{coll}$. The rotation by θ_{coll} is not present inboard of r_{FA}, but there can be pitch of the local principal axes with respect to the hub plane, which is included in θ_{tw} for $r < r_{FA}$. Note that $\theta_{tw}(r_{FA}^-)$ is not necessarily zero, hence there is a jump in θ_m at r_{FA}, of magnitude:

$$\theta(r_{FA}^+) - \theta(r_{FA}^-) = \theta_{coll} - \theta_{tw}(r_{FA}^-)$$

The trim pitch angle is then:

$$\theta_m = \begin{cases} \theta_{coll} + \theta_{tw}(r) , & r > r_{FA} \\ \theta° = \theta_{coll} , & r = r_{FA} \\ \theta_{tw}(r) , & r < r_{FA} \end{cases}$$

It is assumed that θ_m is steady (constant in time), independent of ψ. Cyclic variations in θ, as may be required to trim the rotor, are included in the perturbation to the pitch angle. We shall alow the trim pitch angle to be large, hence θ_{coll} and θ_{tw} may be large angles.

The droop and sweep of the blade elastic axis are defined with respect to the hub plane axes, so it follows that unless the feathering axis is parallel to the outboard elastic axis, these angles vary with the root pitch of the blade. Let $\delta^*_{FA_2}$ and $\delta^*_{FA_4}$ be the droop and sweep of the blade when the pitch

angle at 75-percent radius is zero. Then the following relation can be derived from the root geometry:

$$\delta_{FA_2} = \delta_{FA_4} + (\delta^*_{FA_2} - \delta_{FA_4})\cos\theta_{75} + (\delta^*_{FA_3} - \delta_{FA_5})\sin\theta_{75}$$

$$\delta_{FA_3} = \delta_{FA_5} - (\delta^*_{FA_2} - \delta_{FA_4})\sin\theta_{75} + (\delta^*_{FA_3} - \delta_{FA_5})\cos\theta_{75}$$

where $\theta_{75} = \theta^\circ + \theta_{tw}(r = 0.75)$. The angles $\delta^*_{FA_2}$ and $\delta^*_{FA_3}$ are fixed geometric constants, so the variation of the droop and sweep due to blade pitch perturbations is

$$\dot{\delta}_{FA_2} = \dot{\theta}^\circ(\delta_{FA_3} - \delta_{FA_5})$$

$$\dot{\delta}_{FA_3} = -\dot{\theta}^\circ(\delta_{FA_2} - \delta_{FA_4})$$

Between the B coordinate system (rotating hub plane axes) and the o system (undistorted section axes), there are the following rotations: $\delta_{FA_1} - \delta_{FA_2}$ about $\vec{i}_B$ (small precone and droop), δ_{FA_3} about $\vec{k}_B$ (small sweep), and then rotation θ_m about $\vec{j}_{EA}$ (the large pitch angle). So

$$\vec{i}_o = \cos\theta_m\vec{i}_B - \sin\theta_m\vec{k}_B + \vec{j}_B[(\delta_{FA_1} - \delta_{FA_2})\sin\theta_m - \delta_{FA_3}\cos\theta_m]$$

$$\vec{k}_o = \sin\theta_m\vec{i}_B + \cos\theta_m\vec{k}_B + \vec{j}_B[-(\delta_{FA_1} - \delta_{FA_2})\cos\theta_m - \delta_{FA_3}\sin\theta_m]$$

$$\vec{j}_o = \vec{j}_{EA} = \vec{j}_B + \delta_{FA_3}\vec{i}_B + (\delta_{FA_1} - \delta_{FA_2})\vec{k}_B$$

where δ_{FA_2} and δ_{FA_3} are based on $\theta^\circ_m = \theta_{coll}$, and are absent for $r < r_{FA}$. Subscripts o and m will be dropped when it is obvious that the undistorted geometry is being considered.

2.2.2 Rotor motion- The rotor blade motion is described by the following degrees of freedom:

(a) Gimball pitch and roll motion of the rotor disk (omitted for articulated and hingeless rotors)
(b) Rotor speed perturbation
(c) Then torsion about the elastic axis, and rigid pitch motion about the feathering axis
(d) Followed by bending deflection of the elastic axis, including rigid flap and lag motion if the blade is articulated.

Figure 9(a) shows the gimbal motion and rotor speed perturbation in the nonrotating frame. The gimbal degrees of freedom are β_{GC} and β_{GS} — respectively, pitch and roll of the rotor disk in the nonrotating frame. The rotor rotational speed perturbation is $\dot{\psi}_s$. The degree of freedom ψ_s is a rotation

about the shaft axis $\vec{k}_S$, so the azimuth angle of the mth blade is really $\psi_m + \psi_s$. Figure 9(b) shows the gimbal motion in the rotating frame. The degrees of freedom are β_G and θ_G, given by

$$\beta_G = \beta_{GC} \cos \psi_m + \beta_{GS} \sin \psi_m$$

$$\theta_G = -\beta_{GC} \sin \psi_m + \beta_{GC} \cos \psi_m$$

The gimbal effects are primarily due to β_G, the flapwise rotation about the $\vec{i}_B$ axis; θ_G, the rotation about $\vec{j}_B$, only introduces a translation of the hub due to z_{FA} and x_{FA}. The blade pitch θ is defined with respect to the hub plane, so only the blade inboard of the pitch bearing sees the pitch rotation due to θ_G.

Figure 3 showed the geometry of the deformed blade. The blade deformation is described by twist θ about the elastic axis, bending deflection x_o and z_o of the elastic axis, and rotations of the section ϕ_x and ϕ_z due to bending. The pitch angle θ, including perturbations, is implicit in the $\vec{i}$, $\vec{j}$, and $\vec{k}$ coordinate system; $\vec{i}$ and $\vec{k}$ are the principal axes of the blade with no bending, but now include the blade elastic torsion and rigid pitch motion. The XS axes ($\vec{i}_{XS}$, $\vec{j}_{XS}$, $\vec{k}_{XS}$) are the section principal axes and elastic axis of the deformed blade, including both torsion and bending. The tangent to the deformed elastic axis is $\vec{j}_{XS}$. From section 2.1.2, the rotation of the cross section by ϕ_x and ϕ_z is related to the bending as follows:

$$\phi_x \vec{i} + \phi_z \vec{k} = (z_o' - x_o\theta')\vec{i} - (x_o' + z_o\theta')\vec{k} = (z_o\vec{i} - x_o\vec{k})'$$

The blade position, relative to the root, is then

$$\vec{r} = (r + r_o)\vec{j} + x_o\vec{i} + z_o\vec{k} + x\vec{i}_{XS} + z\vec{k}_{XS}$$

$$= (r + r_o + x\phi_z - z\phi_x)\vec{j} + (x_o\vec{i} + z_o\vec{k}) + x\vec{i} + z\vec{k}$$

The perturbation of the radial position, $r_o + x\phi_z - z\phi_x$, will be neglected since it is much smaller than the radial position r.

The blade pitch angle θ is the angle of the major principal axis of the section (x axis) measured from the hub plane. The pitch is composed of the root pitch $\theta°(\psi)$ (the blade pitch at the pitch bearing, $r = r_{FA}$, due to control commands, control system flexibility, and kinematic coupling); the builtin twist $\theta_{tw}(r)$ (where $\theta_{tw}(r_{FA}) = 0$); and torsion about the elastic axis $\theta_e(r,\psi)$ (where $\theta_e(r_{FA},\psi) = 0$; only θ_e produces shear stress in the blade). The blade shank inboard of r_{FA} does not have the root pitch $\theta°$ or the elastic torsion θ_e. Thus the blade pitch is

$$\theta = \begin{cases} \theta° + \theta_{tw} + \theta_e , & r > r_{FA} \\ \theta° , & r = r_{FA} \\ \theta_{tw} , & r < r_{FA} \end{cases}$$

The commanded root pitch angle is defined as $\theta^c = \theta_{coll} + \theta_{con}$. Here θ_{coll} is the trim value of the collective pitch, which may be large but is assumed to be steady in time; θ_{con} is the perturbation control input (including cyclic to trim the rotor), which is time dependent but is assumed to be a small angle. The blade root pitch commanded by the control system is θ^c; $\theta°$ is the actual root pitch. The difference $(\theta° - \theta^c)$ is the rigid pitch motion due to control-system flexibility or kinematic coupling in the control system. Hence the blade pitch may be written as

$$\theta = \begin{cases} (\theta_{coll} + \theta_{tw}) + (\theta° - \theta^c) + \theta_{con} + \theta_e , & r > r_{FA} \\ \theta° = \theta_{coll} + (\theta° - \theta^c) + \theta_{con} , & r = r_{FA} \\ \theta_{tw} , & r < r_{FA} \end{cases}$$

The pitch angle θ may now be separated into trim and perturbation contributions:

$$\theta = \begin{cases} \theta_m + \tilde{\theta} , & r > r_{FA} \\ \theta_m° + \tilde{\theta}° , & r = r_{FA} \\ \theta_m , & r < r_{FA} \end{cases}$$

where the trim terms are (as above)

$$\theta_m = \begin{cases} \theta_{coll} + \theta_{tw} , & r > r_{FA} \\ \theta_{coll} , & r = r_{FA} \\ \theta_{tw} , & r < r_{FA} \end{cases}$$

and the perturbations are

$$\tilde{\theta} = \begin{cases} (\theta° - \theta^c) + \theta_{con} + \theta_e , & r > r_{FA} \\ \tilde{\theta}° = (\theta° - \theta^c) + \theta_{con} , & r = r_{FA} \\ 0 , & r < r_{FA} \end{cases}$$

The trim value of the pitch θ_m is composed of θ_{coll} and θ_{tw}; it is a large steady angle. The perturbation of the pitch angle $\tilde{\theta}$ is composed of the blade motion terms $(\theta° - \theta^c)$, θ_{con}, and θ_e; all are small angles, so $\tilde{\theta}$ is small. For the rigid pitch degree of freedom, the notation p_o is used where

$$p_o = \tilde{\theta}° = (\theta° - \theta^c) + \theta_{con}$$

(The notation p_o is chosen to be consistent with that for the modal expansion of the elastic torsion θ_e described below.) Note that p_o is the total rigid pitch motion of the blade, including the control angle θ_{con}.

2.2.3 Coordinate frames- Table 1 summarizes the coordinate frames used, and the axis rotations between them. The unit vectors of the B system are

$$\vec{i}_B = \sin\psi_m \vec{i}_S - \cos\psi_m \vec{j}_S$$

$$\vec{j}_B = \cos\psi_m \vec{i}_S + \sin\psi_m \vec{j}_S$$

$$\vec{k}_B = \vec{k}_S$$

Between the B system and the blade system, there are the following rotations: first, $\beta_G + \delta_{FA_1} - \delta_{FA_2}$ about $\vec{i}_B$, and $\psi_s - \delta_{FA_3}$ about $\vec{k}_B$; then θ about j_{EA}. Hence the unit vectors are

$$\vec{i} = \cos\theta \vec{i}_B - \sin\theta \vec{k}_B + \vec{j}_B[(\beta_G + \delta_{FA_1} - \delta_{FA_2})\sin\theta + (\psi_s - \delta_{FA_3})\cos\theta]$$

$$\vec{k} = \sin\theta \vec{i}_B + \cos\theta \vec{k}_B + \vec{j}_B[-(\beta_G + \delta_{FA_1} - \delta_{FA_2})\cos\theta + (\psi_s - \delta_{FA_3})\sin\theta]$$

$$\vec{j} = \vec{j}_{EA} = \vec{j}_B - (\psi_s - \delta_{FA_3})\vec{i}_B + (\beta_G + \delta_{FA_1} - \delta_{FA_2})\vec{k}_B$$

The unit vectors of the XS are

$$\vec{i}_{XS} = \vec{i} + \phi_z \vec{j}$$

$$\vec{j}_{XS} = \vec{j} - \phi_z \vec{i} + \phi_x \vec{k} = \vec{j} + (x_o \vec{i} + z_o \vec{k})'$$

$$\vec{k}_{XS} = \vec{k} - \phi_x \vec{j}$$

For the undisturbed blade system, the rotations by β_G and ψ_s are dropped, and also the pitch perturbations in θ. Hence the unit vectors are

$$\vec{i}_o = \cos\theta_m \vec{i}_B - \sin\theta_m \vec{k}_B + \vec{j}_B[(\delta_{FA_1} - \delta_{FA_2})\sin\theta_m - \delta_{FA_3}\cos\theta_m]$$

$$\vec{k}_o = \sin\theta_m \vec{i}_B + \cos\theta_m \vec{k}_B + \vec{j}_B[-(\delta_{FA_1} - \delta_{FA_2})\cos\theta_m - \delta_{FA_3}\sin\theta_m]$$

$$\vec{j}_o = \vec{j}_B + \delta_{FA_3}\vec{i}_B + (\delta_{FA_1} - \delta_{FA_2})\vec{k}_B$$

TABLE 1.- SUMMARY OF COORDINATE FRAMES

Coordinate frame	Axis rotations
S system nonrotating, hub plane frame	
	$\psi_m - 90°$ about $\vec{k}_S$ (shaft rotation)
B system rotating hub plane frame, mth blade	
	β_G about $\vec{i}_B$ (gimbal) θ_G about $\vec{j}_B$ (gimbal) ψ_s about $\vec{k}_B$ (rotor speed perturbation)
H system hub frame	
	δ_{FA_1} about $\vec{i}_H$ (precone)
FA system blade inboard elastic axis	
	$-\delta_{FA_2}$ about $\vec{i}_{FA}$ (droop) $-\delta_{FA_3}$ about $\vec{k}_{FA}$ (sweep)
EA system blade outboard elastic axis	
	θ about $\vec{j}_{EA}$ (pitch/torsion) $-\theta_G$ about $\vec{j}_{EA}$ (gimbal)
Blade system principal axes, including torsion	
	ϕ_x about $\vec{i}$ (bending) ϕ_z about $\vec{k}$ (bending)
XS system principal axes, including torsion and bending	

Now since the blade motion ($\tilde{\theta}$, β_G, and ψ_s) is small, the blade system unit vectors can be expanded in terms of those of the undisturbed frame:

$$\vec{i} = \vec{i}_o - \tilde{\theta}\vec{k}_o + \vec{j}_B\left\{[\beta_G - \tilde{\theta}°(\delta_{FA_3} - \delta_{FA_5})]\sin\theta + [\psi_s + \tilde{\theta}°(\delta_{FA_2} - \delta_{FA_4})]\cos\theta\right\}$$

$$\vec{k} = \vec{k}_o + \tilde{\theta}\vec{i}_o + \vec{j}_B\left\{-[\beta_G - \tilde{\theta}°(\delta_{FA_3} - \delta_{FA_5})]\cos\theta + [\psi_s + \tilde{\theta}°(\delta_{FA_2} - \delta_{FA_4})]\sin\theta\right\}$$

It follows that

$$(x_o\vec{i} + z_o\vec{k}) = (x_o\vec{i}_o + z_o\vec{k}_o) + \tilde{\theta}(z_o\vec{i}_o - x_o\vec{k}_o) + \vec{j}_B\Big\{[\psi_s + \tilde{\theta}^\circ(\delta_{FA_2} - \delta_{FA_4})]\vec{i}_B$$

$$- [\beta_G - \tilde{\theta}^\circ(\delta_{FA_3} - \delta_{FA_5})]\vec{k}_B\Big\} \cdot (x_o\vec{i}_o + z_o\vec{k}_o)$$

which is an expansion of the bending/torsion deflection of the blade in terms of the undisturbed axis system.

2.2.4 Blade position, velocity, and acceleration- The distance from the gimbal to a point on the blade section is

$$\vec{r} = -z_{FA}\vec{k}_H - x_{FA}\vec{i}_H + r_{FA}(\vec{j}_{FA} - \vec{j}_{EA}) + r\vec{j} + x_o\vec{i} + z_o\vec{k} + x\vec{i}_{XS} + z\vec{k}_{XS}$$

which may be written:

$$\vec{r} = \vec{i}_B(-x_{FA} - z_{FA}\theta_G - r_{FA}\delta_{FA_3}) + \vec{j}_B(z_{FA}\beta_G - x_{FA}\psi_s)$$

$$+ \vec{k}_B(-z_{FA} + x_{FA}\theta_G + r_{FA}\delta_{FA_2}) + r\vec{j} + (x_o\vec{i} + z_o\vec{k}) + (x\vec{i} + z\vec{k})$$

$$= \vec{i}_B[-x_{FA} - z_{FA}\theta_G - r\psi_s + (r - r_{FA})\delta_{FA_3}]$$

$$+ \vec{k}_B[-z_{FA} + x_{FA}\theta_G + r(\beta_G + \delta_{FA_1}) - (r - r_{FA})\delta_{FA_2}]$$

$$+ \vec{j}_B(r + z_{FA}\beta_G - x_{FA}\psi_s) + (x_o\vec{i} + z_o\vec{k}) + (x\vec{i} + z\vec{k})$$

The velocity of a point on the blade relative to the rotating frame (B system) is

$$\vec{v}_r = \left(\frac{d}{dt}\vec{r}\right)_B = \vec{i}_B(-z_{FA}\dot{\theta}_G - r\dot{\psi}_s) + \vec{j}_B(z_{FA}\dot{\beta}_G - x_{FA}\dot{\psi}_s) + \vec{k}_B(x_{FA}\dot{\theta}_G + r\dot{\beta}_G)$$

$$-(r - r_{FA})\dot{\theta}^\circ[(\delta_{FA_2} - \delta_{FA_4})\vec{i}_B + (\delta_{FA_3} - \delta_{FA_5})\vec{k}_B]$$

$$+ [(x_o + x)\vec{i} + (z_o + z)\vec{k}]^\cdot$$

where

$$[(x_o + x)\vec{i} + (z_o + z)\vec{k}]^\cdot \cong (x_o\vec{i}_o + z_o\vec{k}_o)^\cdot + \dot{\theta}[(z_o + z)\vec{i}_o - (x_o + x)\vec{k}_o]$$

Finally, the acceleration of a point on the blade relative to the rotating frame and neglecting the squares of velocities is

$$\vec{a}_r = \left(\frac{d}{dt}\vec{v}_r\right)_B = \vec{i}_B(-z_{FA}\ddot{\theta}_G - r\ddot{\psi}_s) + \vec{j}_B(z_{FA}\ddot{\beta}_G - x_{FA}\ddot{\psi}_s) + \vec{k}_B(x_{FA}\ddot{\theta}_G + r\ddot{\beta}_G)$$

$$- (r - r_{FA})\ddot{\theta}^\circ[(\delta_{FA_2} - \delta_{FA_4})\vec{i}_B + (\delta_{FA_3} - \delta_{FA_5})\vec{k}_B]$$

$$+ [(x_o + x)\vec{i} + (z_o + z)\vec{k}]^{\cdot\cdot}$$

$$[(x_o + x)\vec{i} + (z_o + z)\vec{k}]^{\cdot\cdot} \cong (x_o\vec{i}_o + z_o\vec{k}_o)^{\cdot\cdot} + \ddot{\theta}[(z_o + z)\vec{i} - (x_o + x)\vec{k}]$$

The acceleration of the blade is required with respect to an inertial frame, specifically, the S system. The B system rotates at a constant angular velocity $\vec{\Omega} = \Omega\vec{k}_B$ with respect to the S frame. The shaft motion is composed of linear and angular displacement of the origin of the S frame (the gimbal point at the hub center of rotation). The acceleration, angular velocity, and angular acceleration of the S system, with respect to the nonrotating inertial frame, are

$$\vec{a}_o = \ddot{x}_h\vec{i}_S + \ddot{y}_h\vec{j}_S + \ddot{z}_h\vec{k}_S$$

$$\vec{\omega}_o = \dot{\alpha}_x\vec{i}_S + \dot{\alpha}_y\vec{j}_S + \dot{\alpha}_z\vec{k}_S$$

$$\dot{\vec{\omega}}_o = \ddot{\alpha}_x\vec{i}_S + \ddot{\alpha}_y\vec{j}_S + \ddot{\alpha}_z\vec{k}_S$$

It is assumed that $\vec{a}_o$, $\vec{\omega}_o$, and $\dot{\vec{\omega}}_o$ are all small quantities.

The motion of the blade relative to the B frame was derived previously — the acceleration ($\vec{a}_r$) and velocity ($\vec{v}_r$) of the blade. Now the acceleration of a blade point in inertial space is derived in terms of the motion of the shaft, the rotation of the rotor, and the blade motion in the B frame. From the result for the acceleration in a rotating coordinate frame (the S frame, rotating at rate $\vec{\omega}_o$), it follows that

$$\vec{a} = \vec{a}_o + \vec{a}_{r,s} + 2\vec{\omega}_o\times\vec{v}_{r,s} + \vec{\omega}_o\times(\vec{\omega}_o\times\vec{r}) + \dot{\vec{\omega}}_o\times\vec{r}$$

where $\vec{a}_{r,s}$ and $\vec{v}_{r,s}$ are the acceleration and velocity relative to the S frame. The B system rotates at angular velocity $\vec{\Omega} = \Omega\vec{k}_B$ with respect to the S frame. Hence, with Ω constant and no angular or linear acceleration of the B frame with respect to the S frame, it follows that

$$\vec{a}_{r,s} = \vec{a}_r + 2\vec{\Omega}\times\vec{r} + \vec{\Omega}\times(\vec{\Omega}\times\vec{r})$$

$$\vec{v}_{r,s} = \vec{v}_r + \vec{\Omega}\times\vec{r}$$

where $\vec{a}_r$ and $\vec{v}_r$ are the acceleration and velocity relative to the B frame. Thus,

$$\vec{a} = \vec{a}_o + \vec{a}_r + 2\vec{\Omega}\times\vec{v}_r + \vec{\Omega}\times(\vec{\Omega}\times\vec{r}) + 2\vec{\omega}_o\times\vec{v}_r + 2\vec{\omega}_o\times(\vec{\Omega}\times\vec{r}) + \vec{\omega}_o\times(\vec{\omega}_o\times\vec{r}) + \dot{\vec{\omega}}_o\times\vec{r}$$

To first order in the velocity and angular velocity, this becomes, finally,

$$\vec{a} \cong \vec{a}_o + \vec{a}_r + 2\vec{\Omega}\times\vec{v}_r + \vec{\Omega}\times(\vec{\Omega}\times\vec{r}) + 2\vec{\omega}_o\times(\vec{\Omega}\times\vec{r}) + \dot{\vec{\omega}}_o\times\vec{r}$$

The six terms in $\vec{a}$ are, respectively, the acceleration of the origin, the relative acceleration in the rotating frame, the relative Coriolis acceleration, the centrifugal acceleration, the Coriolis acceleration due to the angular velocity of the origin, and the angular acceleration of the origin. In dyadic operator form, and with $\vec{\Omega} = \Omega\vec{k}_B$, the acceleration is

$$\vec{a} = \vec{a}_o + \vec{a}_r + 2\Omega(\vec{j}_B\vec{i}_B - \vec{i}_B\vec{j}_B)\vec{v}_r - \Omega^2(\vec{i}_B\vec{i}_B + \vec{j}_B\vec{j}_B)\vec{r}$$
$$+ 2\Omega(\vec{k}_B\vec{r} - \vec{r}\vec{k}_B)\vec{\omega}_o - (\vec{r}\times)\dot{\vec{\omega}}_o$$

To obtain then the total acceleration of the blade, the acceleration is multiplied by the density of the blade point (dm dr) and integrated over the volume of the blade.

2.2.5 Force and moment equilibrium- The equations of motion for elastic bending, torsion, and rigid pitch of the blade are obtained from equilibrium of inertial, aerodynamic, and elastic moments on the portion of the blade outboard of r:

$$-\vec{M}_E + \vec{M}_A = \vec{M}_I$$

where M_E is the structural moment on the inboard face of the deformed cross section (so $-M_E$ is the external force on the outboard face); M_A is the total aerodynamic moment on the blade surface outboard of r; and M_I is the total inertial moment of the blade outboard of r. The structural moment M_E is obtained from engineering beam theory for bending and torsion (section 2.1), from the control system flexibility for rigid pitch, or from the hub spring for gimbal motion. Alternatively, M_E may be viewed as the force or moment on the hub due to the rotor (so $-M_E$ is the force on the rotor); M_I is the inertial moment of the blade outboard of r, about the point $\vec{r}_o(r)$:

$$\vec{M}_I = \int_r^1 \int_{\text{section}} [\vec{r}(\rho) - \vec{r}_o(r)]\times\vec{a}\ dm\ d\rho$$

For bending of the blade, engineering beam theory gives

$$\vec{M}_E^{(2)} = M_x\vec{i} + M_z\vec{k} = (\vec{i}\vec{i}_{XS} + \vec{k}\vec{k}_{XS})\vec{M}_E$$

Therefore, the operator $(\vec{i}\vec{i}_{XS} + \vec{k}\vec{k}_{XS})$ is applied to $\vec{M}_I$ and $\vec{M}_A$ also. For bending, the moments about the tension center ($x = x_C$) are required. Then the desired partial differential equation for bending is obtained from $\partial^2 M^{(2)}/\partial r^2$.

For elastic torsion, engineering beam theory gives $M_{r_E} = \vec{j}_{XS} \cdot \vec{M}_E$. So this same operator is applied to $\vec{M}_I$ and $\vec{M}_A$. For torsion, moments about the section elastic axis $(x = 0)$ at r are required; also, elastic torsion involves only the blade outboard of r_{FA}. The desired partial differential equation for torsion is then obtained from $\partial M_r/\partial r$. The equation of motion for the rigid pitch degree of freedom p_o is obtained from equilibrium of moments about the feathering axis, $M_{FA} = \hat{e}_{FA} \cdot \vec{M}(r_{FA})$. Here $\vec{M}$ is the moment about the feathering axis $(x = 0)$ at $r = r_{FA}$, and $\hat{e}_{FA}$ is the direction of the feathering axis, including perturbations due to blade bending:

$$\hat{e}_{FA} = \vec{j}_{FA} + (x_o\vec{i} + z_o\vec{k})'\Big|_{r_{FA}} - \delta_{FA_4}\vec{k}_B + \delta_{FA_5}\vec{i}_B$$

The elastic restraint from the control-system flexibility gives the restoring moment about the feathering axis, completing the desired equation of motion.

The equations of motion for the gimbal degrees of freedom β_{GC} and β_{GS} are obtained from equilibrium of moments about the gimbal, $M_x = \vec{i}_S \cdot \vec{M}$ and $M_y = \vec{j}_S \cdot \vec{M}$, where $\vec{M}$ is the total moment (from all N blades) about the gimbal point, in the nonrotating frame. The equation of motion for the rotor speed perturbation degree of freedom ψ_S is obtained from equilibrium of torque moments $Q = -M_z = \vec{k}_S \cdot \vec{M}$, where, again, $\vec{M}$ is the total moment about the gimbal point.

The total rotor force and moment on the hub (at the gimbal point) are obtained from a sum over the N blades of $\vec{F}^{(m)}$ and $\vec{M}^{(m)}$, the force and moment due to the mth blade:

$$\vec{F} = \sum_{m=1}^{N} \vec{F}^{(m)}$$

$$\vec{M} = \sum_{m=1}^{N} \vec{M}^{(m)}$$

Since $-\vec{F}^{(m)}$ and $-\vec{M}^{(m)}$ are the forces on the blade, from force and moment equilibrium of the entire blade, it follows that

$$-\vec{F}^{(m)} + \vec{F}_A = \vec{F}_I$$

$$-\vec{M}^{(m)} + \vec{M}_A = \vec{M}_I$$

The hub force and moment are required in the nonrotating hub plane frame (S system); the components are defined as follows (see fig. 6):

$$\vec{F} = H\vec{i}_S + Y\vec{j}_S + T\vec{k}_S$$

$$\vec{M} = M_x\vec{i}_S + M_y\vec{j}_S - Q\vec{k}_S$$

Note that $\vec{M}$ produces the gimbal and rotor-speed perturbation motion if those degrees of freedom are used, but it is also transmitted through the gimbal to the helicopter body or support.

The aerodynamic forces and moments on the blade are obtained from the integral over the span of the aerodynamic forces and pitch moments on the blade section. The forces acting on the section at the elastic axis are F_x, F_z, and F_r (see fig. 10). These are the components of the aerodynamic lift and drag forces in the hub plane axis system (B frame) — F_x is in the hub plane, positive in the drag direction; F_z is normal to the hub plane, positive upward; and F_r is the radial force, positive outward. There are also radial components of F_x and F_z due to the tilt of the section by blade bending; here F_r is just the radial drag force. Thus the aerodynamic force acting on the section at the deformed elastic axis is

$$\vec{F}_{aero} = F_x\vec{i}_B + F_z\vec{k}_B - \vec{j}_B\vec{j}_{XS} \cdot (F_x\vec{i}_B + F_z\vec{k}_B) + F_r\vec{j}_{XS}$$

$$\cong F_x\vec{i}_B + F_z\vec{k}_B + \tilde{F}_r\vec{j}_B$$

where

$$\tilde{F}_r = F_r - F_z[\beta_G + \delta_{FA_1} - \delta_{FA_2} + \vec{k}_B \cdot (x_o\vec{i} + z_o\vec{k})']$$

$$- F_x[-\psi_s + \delta_{FA_3} + \vec{i}_B \cdot (x_o\vec{i} + z_o\vec{k})']$$

Finally, M_a is the section moment about the elastic axis, positive nose-up. Thus the aerodynamic moment is $\vec{M}_{aero} = M_a\vec{j}_{XS}$.

2.2.6 Bending equation- The equation of motion for blade bending is obtained from

$$\frac{\partial^2}{\partial r^2}\vec{M}_E^{(2)} + \frac{\partial^2}{\partial r^2}\vec{M}_I^{(2)} = \frac{\partial^2}{\partial r^2}\vec{M}_A^{(2)}$$

where $\vec{M}$ is the moment about the tension center $(x = x_C)$ at r and

$$\vec{M}^{(2)} = (\vec{i}\vec{i}_{XS} + \vec{k}\vec{k}_{XS})\vec{M} = [\vec{i}\vec{i} + \vec{k}\vec{k} - (x_o\vec{i} + z_o\vec{k})'\vec{j}]\vec{M}$$

Considering first the blade outboard of r_{FA}, the inertia moment is

$$\vec{M}_I = \int_r^1 \int_{section} (\vec{r}|_{\rho xz} - \vec{r}|_{rx_Co}) \times \vec{a}\ dm\ d\rho$$

$$= \int_r^1 \int \left\{(\rho - r)\vec{j} + (x_o + x)\vec{i} + (z_o + z)\vec{k} - [(x_o + x_C)\vec{i} + z_o\vec{k}]|_r\right\} \times \vec{a}\ dm\ d\rho$$

So

$$\frac{\partial \vec{M}}{\partial r} = -[\vec{j} + (x_o\vec{i} + z_o\vec{k} + x_c\vec{i})']\times \int_r^1\int \vec{a}\ dm\ d\rho - \int (x\vec{i} + z\vec{k} - x_C\vec{i})\times\vec{a}\ dm$$

$$\frac{\partial^2\vec{M}}{\partial r^2} = \vec{j}\times\int\vec{a}\ dm - \left[(x_o\vec{i} + z_o\vec{k} + x_C\vec{i})'\times \int_r^1\int \vec{a}\ dm\ d\rho\right]'$$

$$- \left[\int (x\vec{i} + z\vec{k} - x_C\vec{i})\times\vec{a}\ dm\right]'$$

$$\vec{j}\cdot\vec{M} = \int_r^1\int [(z_o + z)\vec{i} - (x_o + x)\vec{k} - (z_o\vec{i} - x_o\vec{k} - x_C\vec{k})|_r]\cdot\vec{a}\ dm\ d\rho$$

Finally,

$$\frac{\partial^2}{\partial r^2}\vec{M}_I^{(2)} = (\vec{i}\vec{i} + \vec{k}\vec{k})\frac{\partial^2\vec{M}_I}{\partial r^2} - [(x_o\vec{i} + z_o\vec{k})'\vec{j}\cdot\vec{M}_I]''$$

$$= \vec{j}\times\int\vec{a}\ dm + \left[\int(z\vec{i} - x\vec{k} + x_C\vec{k})\vec{j}\cdot\vec{a}\ dm\right]'$$

$$+ \left[(z_o\vec{i} - x_o\vec{k} - x_C\vec{k})'\int_r^1\int \vec{j}\cdot\vec{a}\ dm\ d\rho\right]'$$

$$- \left\{(x_o\vec{i} + z_o\vec{k})'\int_r^1\int [(z_o + z)\vec{i} - (x_o + x)\vec{k}\right.$$

$$\left. - (z_o\vec{i} - x_o\vec{k} - x_C\vec{k})|_r]\cdot\vec{a}\ dm\ d\rho\right\}''$$

The last term in this result — $[(x_o\vec{i} + z_o\vec{k})'\vec{j}\cdot\vec{M}_I]''$ — will be neglected since it is order $(c/R)^2$ smaller than the first term. Including the case $r < r_{FA}$, which introduces only an effect of droop and sweep, the result is

$$\frac{\partial^2\vec{M}_I^{(2)}}{\partial r^2} = \vec{j}\times\int\vec{a}\ dm + \left[\int(z\vec{i} - x\vec{k} + x_C\vec{k})\vec{j}\cdot\vec{a}\ dm\right]'$$

$$+ \left[(z_o\vec{i} - x_o\vec{k} - x_C\vec{k})'\int_r^1\int \vec{j}\cdot\vec{a}\ dm\ d\rho\right]'$$

$$- \delta(r - r_{FA})\left(\delta_{FA_2}\vec{i}_B + \delta_{FA_3}\vec{k}_B\right)\int_{r_{FA}}^1\int \vec{j}\cdot\vec{a}\ dm\ d\rho$$

where $\delta(r)$ is the delta function, that is, an impulse at $r = 0$. The acceleration due to the shaft motion (with $\vec{r} \cong r\vec{j}_B$) is

$$\vec{a} = \vec{a}_o + 2\Omega(\vec{k}_B\vec{r} - \vec{r}\vec{k}_B)\vec{\omega}_o - \vec{r}\times\dot{\vec{\omega}}_o$$
$$\cong \vec{a}_o + 2\Omega r(\vec{k}_B\vec{j}_B - \vec{j}_B\vec{k}_B)\vec{\omega}_o - r\vec{j}_B\times\dot{\vec{\omega}}_o$$

So

$$\frac{\partial^2\vec{M}^{(2)}}{\partial r^2} \cong m\vec{j}_B\times\vec{a} = m(\vec{i}_B\vec{k}_B - \vec{k}_B\vec{i}_B)\vec{a}_o + 2\Omega rm(\vec{i}_B\vec{j}_B)\vec{\omega}_o + mr(\vec{i}_B\vec{i}_B + \vec{k}_B\vec{k}_B)\dot{\vec{\omega}}_o$$

The blade relative acceleration gives

$$\frac{\partial^2\vec{M}^{(2)}}{\partial r^2} \cong \vec{j}\times\int \vec{a}_r\, dm = m\Big\{\vec{k}_B(z_{FA}\ddot{\theta}_G + r\ddot{\psi}_s) + \vec{i}_B(x_{FA}\ddot{\theta}_G + r\ddot{\beta}_G) + (z_o\vec{i} - x_o\vec{k})^{\cdot\cdot}$$
$$- \ddot{\theta}[(x_o + x_I)\vec{i} + z_o\vec{k}] - \ddot{\theta}^\circ(r - r_{FA})\left[\left(\delta_{FA_3} - \delta_{FA_5}\right)\vec{i}_B - \left(\delta_{FA_2} - \delta_{FA_4}\right)\vec{k}_B\right]\Big\}$$

The centrifugal acceleration is $\vec{a} = -\Omega^2(\vec{i}_B\vec{i}_B + \vec{j}_B\vec{j}_B)\vec{r}$, so

$$\vec{j}\times\vec{a} = \Omega^2\vec{k}_B\Big\{-x_{FA} - z_{FA}\theta_G - r_{FA}\delta_{FA_3} + \vec{i}_B\cdot[(x_o + x)\vec{i} + (z_o + z)\vec{k}]\Big\} + \Omega^2\vec{i}_B r\left(\beta_G + \delta_{FA_1} - \delta_{FA_2}\right)$$

$$\vec{j}\cdot\vec{a} \cong -\Omega^2 r$$

Thus

$$\frac{\partial^2\vec{M}^{(2)}}{\partial r^2} = -\Omega^2\Bigg(\left[(z_o\vec{i} - x_o\vec{k})'\int_r^1 \rho m\, d\rho\right]' + m\vec{k}_B\vec{k}_B\cdot(z_o\vec{i} - x_o\vec{k}) - \Big\{[\tilde{\theta}(x_o\vec{i} + z_o\vec{k} + x_C\vec{i})]'$$
$$\times\int_r^1 \rho m\, d\rho\Big\}' + [(x_C - x_I)\tilde{\theta}\vec{i}rm]' - m\vec{k}_B\tilde{\theta}\vec{k}_B\cdot(x_o\vec{i} + z_o\vec{k} + x_I\vec{i}) - \delta(r - r_{FA})\tilde{\theta}^\circ$$
$$\times\left[\left(\delta_{FA_3} - \delta_{FA_5}\right)\vec{i}_B - \left(\delta_{FA_2} - \delta_{FA_4}\right)\vec{k}_B\right]\int_{r_{FA}}^1 \rho m\, d\rho + \tilde{\theta}^\circ m\Big[r\left(\delta_{FA_3} - \delta_{FA_5}\right)\vec{i}_B$$
$$- r_{FA}\left(\delta_{FA_2} - \delta_{FA_4}\right)\vec{k}_B\Big] + \vec{k}_B m z_{FA}\theta_G - \vec{i}_B mr\beta_G\Bigg)$$
$$- \Omega^2\Big\{[(x_C - x_I)\vec{k}rm]' - \left[(x_C\vec{k})'\int_r^1 \rho m\, d\rho\right]' - \delta(r - r_{FA})\left(\delta_{FA_2}\vec{i}_B + \delta_{FA_3}\vec{k}_B\right)$$
$$\times\int_{r_{FA}}^1 \rho m\, d\rho + \vec{k}_B m\left(x_{FA} + r_{FA}\delta_{FA_3} - x_I\cos\theta\right) - \vec{i}_B mr\left(\delta_{FA_1} - \delta_{FA_2}\right)\Big\}$$

The Coriolis acceleration is $\vec{a} = 2\Omega\vec{k}_B\times\vec{v}_r$, so

$$\vec{j} \cdot \vec{a} = 2\Omega[-r\dot{\psi}_s - \vec{k}_B \cdot (z_o\vec{i} - x_o\vec{k})^{\bullet}]$$

$$\vec{j}\times\vec{a} = 2\Omega\left\{\vec{k}_B\vec{j}_B \cdot \vec{v}_r + \left[-\left(\delta_{FA_1} - \delta_{FA_2}\right)\vec{i}_B + \delta_{FA_3}\vec{k}_B\right][-r\dot{\psi}_s - \vec{k}_B \cdot (z_o\vec{i} - x_o\vec{k})^{\bullet}]\right\}$$

For the Coriolis acceleration due to the radial velocity $\vec{j} \cdot \vec{v}_r$, it is necessary to include the effect of the change in the radial position of the blade due to bending:

$$\Delta\vec{r} = -\vec{j}_B \frac{1}{2} \int_o^r \left[(x_o\vec{i} + z_o\vec{k} + x_I\vec{i})' - \left(\psi_s - \delta_{FA_3}\right)\vec{i}_B + \left(\beta_G + \delta_{FA_1} - \delta_{FA_2}\right)\vec{k}_B\right]^2 d\rho$$

so

$$\begin{aligned}\vec{j} \cdot \vec{v}_r = &-\int_o^r (z_o\vec{i} - x_o\vec{k})'^{\bullet} \cdot (z_o\vec{i} - x_o\vec{k} - x_I\vec{k})' \, d\rho - (z_o\vec{i} - x_o\vec{k})^{\bullet} \\ &\cdot \left[\left(\delta_{FA_1} - \delta_{FA_2}\right)\vec{i}_B - \delta_{FA_3}\vec{k}_B\right] - \dot{\beta}_G\left[-z_{FA} + \vec{i}_B \cdot (z_o\vec{i} - x_o\vec{k} - x_I\vec{k})\right. \\ &\left. + r\delta_{FA_1} - (r - r_{FA})\delta_{FA_2}\right] - \dot{\psi}_s\left[x_{FA} + \vec{k}_B \cdot (z_o\vec{i} - x_o\vec{k} - x_I\vec{k})\right. \\ &\left. - (r - r_{FA})\delta_{FA_3}\right]\end{aligned}$$

Then

$$\begin{aligned}\frac{\partial^2\vec{M}^{(2)}}{\partial r^2} = &\, 2\Omega\left(-\vec{k}_B m \int_o^r (z_o\vec{i} - x_o\vec{k})'^{\bullet} \cdot (z_o\vec{i} - x_o\vec{k} - x_I\vec{k})' d\rho - \vec{k}_B m\dot{\beta}_G\left[-z_{FA} + \vec{i}_B\right.\right. \\ &\left. \cdot (z_o\vec{i} - x_o\vec{k} - x_I\vec{k}) + r\delta_{FA_1} - (r - r_{FA})\delta_{FA_2} + r\beta_G\right] - \vec{k}_B m\dot{\psi}_s\left[x_{FA} + \vec{k}_B\right. \\ &\left. \cdot (z_o\vec{i} - x_o\vec{k} - x_I\vec{k}) + z_{FA}\theta_G + r_{FA}\delta_{FA_3}\right] - \left\{(x_C - x_I)\vec{k}m[r\dot{\psi}_s + \vec{k}_B\right. \\ &\left.\left. \cdot (z_o\vec{i} - x_o\vec{k})^{\bullet}]\right\}' - \left\{(z_o\vec{i} - x_o\vec{k} - x_C\vec{k})' \int_r^1 [\rho\dot{\psi}_s + \vec{k}_B \cdot (z_o\vec{i} - x_o\vec{k})^{\bullet}]\right. \\ &\left.\times m \, d\rho\right\}' + \delta(r - r_{FA})\left(\delta_{FA_2}\vec{i}_B + \delta_{FA_3}\vec{k}_B\right)\int_{r_{FA}}^1 [\rho\dot{\psi}_s + \vec{k}_B \cdot (z_o\vec{i} - x_o\vec{k})^{\bullet}]m \, d\rho \\ &+ m\left(\beta_G + \delta_{FA_1} - \delta_{FA_2}\right)\vec{j}\times[(z_o\vec{i} - x_o\vec{k})^{\bullet} + r\dot{\psi}_s\vec{k}_B]\Big)\end{aligned}$$

The structural moment (from section 2.1) is

$$\frac{\partial^2 \vec{M}_E^{(2)}}{\partial r^2} = [(EI_{zz}\vec{i}\vec{i} + EI_{xx}\vec{k}\vec{k})(z_o\vec{i} - x_o\vec{k})'']''$$

$$+ [(EI_{XP}\vec{k} - EI_{ZP}\vec{i})\theta'_{tw}\theta'_e]''$$

Finally, the aerodynamic moment about the tension center ($x = x_C$) at r, due to the blade loading acting at the elastic axis at ρ, is

$$\vec{M}_A = \int_r^1 \left(\vec{r}|_{\rho oo} - \vec{r}|_{rx_C o}\right) \times \vec{F}_{aero}\, d\rho$$

$$\cong \int_r^1 (\rho - r)(F_z\vec{i}_B - F_x\vec{k}_B)\, d\rho$$

So

$$\frac{\partial^2 \vec{M}_A^{(2)}}{\partial r^2} = \vec{j} \times \vec{F}_{aero} = F_z\vec{i}_B - F_x\vec{k}_B$$

2.2.7 Elastic torsion equation- The equation of motion for elastic torsion is obtained from

$$-\frac{\partial}{\partial r} M_{r_E} - \frac{\partial}{\partial r} M_{r_I} = -\frac{\partial}{\partial r} M_{r_A}$$

where $\vec{M}$ is the moment about the elastic axis at r and

$$\frac{\partial}{\partial r} M_r = \frac{\partial}{\partial r} \vec{j}_{XS} \cdot \vec{M} = \vec{j} \cdot \frac{\partial \vec{M}}{\partial r} + [(x_o\vec{i} + z_o\vec{k})' \cdot \vec{M}]'$$

The inertia moment is

$$\vec{M}_I = \int_r^1 \int_{section} (\vec{r}|_{\rho xz} - \vec{r}|_{roo}) \times \vec{a}\, dm\, d\rho$$

$$= \int_r^1 \int [(\rho - r)\vec{j} + (x_o + x)\vec{i} + (z_o + z)\vec{k} - (x_o\vec{i} + z_o\vec{k})|_r] \times \vec{a}\, dm\, d\rho$$

So

$$\frac{\partial \vec{M}}{\partial r} = -\left[\vec{j} + (x_o\vec{i} + z_o\vec{k})'\right] \times \int_r^1 \int \vec{a}\, dm\, d\rho - \int (x\vec{i} + z\vec{k}) \times \vec{a}\, dm$$

Thus we have

$$\frac{\partial M_{r_I}}{\partial r} = \int (x\vec{k} - z\vec{i}) \cdot \vec{a}\, dm - (z_o\vec{i} - x_o\vec{k})'' \cdot \int_r^l (\rho - r) \int \vec{a}\, dm\, d\rho - (x_o\vec{i} + z_o\vec{k})'$$

$$\cdot \int (x\vec{k} - z\vec{i})\vec{j} \cdot \vec{a}\, dm - (x_o\vec{i} + z_o\vec{k})'' \cdot \int_r^l \int [(z_o + z)\vec{i} - (x_o + x)\vec{k}$$

$$- (z_o\vec{i} - x_o\vec{k})\big|_r]\vec{j} \cdot \vec{a}\, dm\, d\rho$$

The ordinary differential equation for the kth torsion mode of the mth blade is obtained by operating with $\int_{r_{FA}}^{l} \xi_k(\ldots)dr$, where ξ_k is the elastic torsion mode shape. It is most convenient to apply this operator at this point in the analysis:

$$\int_{r_{FA}}^{l} \xi_k \frac{\partial M_{r_I}}{\partial r}\, dr = \int_{r_{FA}}^{l} \int \left\{ \xi_k (x\vec{k} - z\vec{i}) - \int_{r_{FA}}^{r} \xi_k (z_o\vec{i} - x_o\vec{k})''(r - \rho)d\rho \right\} \cdot \vec{a}\, dm\, dr$$

$$- \int_{r_{FA}}^{l} \xi_k \left\{ (x_o\vec{i} + z_o\vec{k})' \cdot \int (x\vec{k} - z\vec{i})\vec{j} \cdot \vec{a}\, dm + (x_o\vec{i} + z_o\vec{k})'' \right.$$

$$\left. \cdot \int_r^l \int [(z_o + z)\vec{i} - (x_o + x)\vec{k} - (z_o\vec{i} - x_o\vec{k})\big|_r]\vec{j} \cdot \vec{a}\, dm\, d\rho \right\} dr$$

and the following notation is adopted:

$$\vec{X}_k = \xi_k x_I \vec{k} - \int_{r_{FA}}^{r} \xi_k (z_o\vec{i} - x_o\vec{k})''(r - \rho)d\rho$$

The acceleration due to the shaft motion gives

$$\int_{r_{FA}}^{l} \xi_k \frac{\partial M_r}{\partial r}\, dr = \int_{r_{FA}}^{l} \vec{X}_k m\, dr(\vec{i}_B\vec{i}_B + \vec{k}_B\vec{k}_B)\vec{a}_o + 2\Omega \int_{r_{FA}}^{l} \vec{X}_k rm\, dr \cdot \vec{k}_B\vec{j}_B \cdot \vec{\omega}_o$$

$$+ \int_{r_{FA}}^{l} \vec{X}_k rm\, dr(\vec{k}_B\vec{i}_B - \vec{i}_B\vec{k}_B)\dot{\vec{\omega}}_o$$

The blade relative acceleration gives

$$\int_{r_{FA}}^{1} \xi_k \frac{\partial M_r}{\partial r}\, dr = \int_{r_{FA}}^{1} \vec{X}_k m\, dr \cdot (-z_{FA}\ddot{\theta}_G \vec{i}_B + x_{FA}\ddot{\theta}_G \vec{k}_B) + \int_{r_{FA}}^{1} \vec{X}_k rm\, dr \cdot (-\ddot{\psi}_s \vec{i}_B$$

$$+ \ddot{\beta}_B \vec{k}_B) + \int_{r_{FA}}^{1} \vec{X}_k \cdot (x_o \vec{i} + z_o \vec{k})\ddot{m}\, dr + \int_{r_{FA}}^{1} [\vec{X}_k \cdot (z_o \vec{i} - x_o \vec{k}$$

$$- x_I \vec{k}) + \xi_k x_I{}^2]\ddot{\theta} m\, dr - \int_{r_{FA}}^{1} \vec{X}_k \cdot \left[\left(\delta_{FA_2} - \delta_{FA_4}\right)\vec{i}_B\right.$$

$$\left. + \left(\delta_{FA_3} - \delta_{FA_5}\right)\vec{k}_B\right](r - r_{FA})\ddot{\theta}^{\circ} m\, dr - \int_{r_{FA}}^{1} \xi_k \ddot{\theta} I_\theta\, dr$$

where $I_\theta = \int (x^2 + z^2) dm$ is the section pitch moment of inertia about the elastic axis. The blade centrifugal acceleration gives

$$\int_{r_{FA}}^{1} \xi_k \frac{\partial M_r}{\partial r}\, dr = -\Omega^2 \left\{ -\int_{r_{FA}}^{1} \vec{X}_k m\, dr \cdot \vec{i}_B z_{FA} \theta_G - \int_{r_{FA}}^{1} \vec{X}_k rm\, dr \cdot \vec{k}_B \beta_G \right.$$

$$+ \int_{r_{FA}}^{1} \xi_k \tilde{\theta} I_\theta (\cos^2\theta - \sin^2\theta) dr - \int_{r_{FA}}^{1} \vec{X}_k \cdot \vec{k}_B \vec{k}_B \cdot (x_o \vec{i} + z_o \vec{k}$$

$$+ x_I \vec{i}) m\, dr - \int_{r_{FA}}^{1} \xi_k \left[(x_o \vec{i} + z_o \vec{k}) \cdot \vec{k} x_I m - r(x_o \vec{i} + z_o \vec{k})'' \right.$$

$$\left. \cdot \int_{r}^{1} (z_o \vec{i} - x_o \vec{k} - x_I \vec{k}) m\, d\rho \right] dr - \int_{r_{FA}}^{1} \vec{X}_k \cdot \left[\vec{i}_B \left(x_{FA} + r_{FA} \delta_{FA_3} \right) \right.$$

$$\left. \left. + \vec{k}_B r \left(\delta_{FA_1} - \delta_{FA_2} \right) \right] m\, dr \right\}$$

In the centrifugal acceleration, we have neglected a number of terms due to blade torsion and pitch which are of the same order as the propeller moment, but which are normally much smaller than the structural moment.

With $T = \Omega^2 \int_r^1 \rho m \, d\rho$, the structural moment (from section 2.1) is

$$\frac{\partial M_{r_E}}{\partial r} = \left[\left(GJ + k_P{}^2\Omega^2 \int_r^1 \rho m \, d\rho + \theta'^2_{tw} EI_{PP}\right)\theta'_e\right]' + \left(\theta'_{tw} k_P{}^2\Omega^2 \int_r^1 \rho m \, d\rho\right)'$$

$$+ [\theta'_{tw}(EI_{XP}\vec{k} - EI_{ZP}\vec{i}) \cdot (z_o\vec{i} - x_o\vec{k})'']'$$

Finally, the aerodynamic moment about the elastic axis at r is

$$\vec{M}_A = \int_r^1 M_a \vec{j}_{XS} \, d\rho + \int_r^1 [(\rho - r)\vec{j} + (x_o\vec{i} + z_o\vec{k}) - (x_o\vec{i} + z_o\vec{k})|_r] \times \vec{F}_{aero} \, d\rho$$

So

$$\frac{\partial \vec{M}_A}{\partial r} = -M_a \vec{j}_{XS} - \vec{j}_{XS} \times \int_r^1 \vec{F}_{aero} \, d\rho$$

$$\frac{\partial M_{r_A}}{\partial r} = \vec{j}_{XS} \cdot \frac{\partial \vec{M}_A}{\partial r} + (x_o\vec{i} + z_o\vec{k})'' \cdot \vec{M}_A$$

$$= -M_a - (z_o\vec{i} - x_o\vec{k})'' \cdot \int_r^1 (\rho - r)(F_x\vec{i}_B + F_z\vec{k}_B) d\rho$$

and

$$\int_{r_{FA}}^1 \xi_k \frac{\partial M_{r_A}}{\partial r} dr = - \int_{r_{FA}}^1 \xi_k M_a \, dr + \int_{r_{FA}}^1 \vec{X}_{A_k} \cdot (F_x\vec{i}_B + F_z\vec{k}_B) dr$$

where

$$\vec{X}_{A_k} = \vec{X}_k - \xi_k x_I \vec{k}$$

2.2.8 Rigid pitch equation- The equation of motion for rigid pitch is obtained from $M_{FA_E} + M_{FA_I} = M_{FA_A}$, where

$$M_{FA} = \hat{e}_{FA} \cdot \vec{M} = \left[\vec{j}_{FA} + (x_o\vec{i} + z_o\vec{k})'|_{r_{FA}} - \delta_{FA_4}\vec{k}_B + \delta_{FA_5}\vec{i}_B\right] \cdot \vec{M}$$

and $\vec{M}$ is the moment about the feathering axis at $r = r_{FA}$. The inertia moment is

$$\vec{M}_I = \int_{r_{FA}}^{l} \int \left(\vec{r}\big|_{rxz} - \vec{r}\big|_{r_{FA}oo} \right) \times \vec{a} \; dm \; dr$$

$$= \int_{r_{FA}}^{l} \int \left[(r - r_{FA})\vec{j} + (x_o + x)\vec{i} + (z_o + z)\vec{k} - (x_o\vec{i} + z_o\vec{k})\big|_{r_{FA}} \right] \times \vec{a} \; dm \; dr$$

So

$$M_{FA_I} = \int_{r_{FA}}^{l} \int \Big\{ (z_o + z)\vec{i} - (x_o + x)\vec{k} - \left[\left(\delta_{FA_2} - \delta_{FA_4} \right)\vec{i}_B + \left(\delta_{FA_3} - \delta_{FA_5} \right)\vec{k}_B \right]$$

$$\times (r - r_{FA}) - (z_o\vec{i} - x_o\vec{k})\big|_{r_{FA}} - (z_o\vec{i} - x_o\vec{k})'\big|_{r_{FA}} (r - r_{FA}) \Big\} \cdot \vec{a} \; dm \; dr$$

$$+ \int_{r_{FA}}^{l} \int \Big\{ \left[-(x_o\vec{i} + z_o\vec{k})'\big|_{r_{FA}} - \delta_{FA_5}\vec{i}_B + \delta_{FA_4}\vec{k}_B \right] \cdot \Big[(z_o + z)\vec{i} - (x_o + x)\vec{k}$$

$$- (z_o\vec{i} - x_o\vec{k})\big|_{r_{FA}} \Big] + \left(\delta_{FA_3}\vec{i}_B - \delta_{FA_2}\vec{k}_B \right) \cdot [(z_o+z)\vec{i} - (x_o+x)\vec{k}] \Big\} \vec{j} \cdot \vec{a} \; dm \; dr$$

and the following notation is adopted:

$$\vec{X}_o = -(z_o\vec{i} - x_o\vec{k} - x_I\vec{k}) + \left[\left(\delta_{FA_2} - \delta_{FA_4} \right)\vec{i}_B + \left(\delta_{FA_3} - \delta_{FA_5} \right)\vec{k}_B \right] (r - r_{FA})$$

$$+ (z_o\vec{i} - x_o\vec{k})\big|_{r_{FA}} + (z_o\vec{i} - x_o\vec{k})'\big|_{r_{FA}} (r - r_{FA})$$

The acceleration due to the shaft motion gives

$$M_{FA} = -\int_{r_{FA}}^{l} \vec{X}_o m \; dr (\vec{i}_B\vec{i}_B + \vec{k}_B\vec{k}_B)\vec{a}_o - 2\Omega \int_{r_{FA}}^{l} \vec{X}_o rm \; dr \cdot \vec{k}_B\vec{j}_B \cdot \vec{\omega}_o$$

$$-\int_{r_{FA}}^{l} \vec{X}_o rm \; dr (\vec{k}_B\vec{i}_B - \vec{i}_B\vec{k}_B)\dot{\vec{\omega}}_o$$

The blade relative acceleration gives

$$M_{FA} = -\int_{r_{FA}}^{1} \vec{X}_o m\, dr \cdot (-z_{FA}\ddot{\theta}_G \vec{i}_B + x_{FA}\ddot{\theta}_G \vec{k}_B) - \int_{r_{FA}}^{1} \vec{X}_o rm\, dr \cdot (-\ddot{\psi}_s \vec{i}_B + \ddot{\beta}_G \vec{k}_B)$$

$$- \int_{r_{FA}}^{1} \vec{X}_o \cdot (x_o \vec{i} + z_o \vec{k})^{\cdot\cdot} m\, dr - \int_{r_{FA}}^{1} [\vec{X}_o \cdot (z_o \vec{i} - x_o \vec{k} - x_I \vec{k}) + x_I{}^2]\ddot{\theta} m\, dr$$

$$+ \int_{r_{FA}}^{1} \vec{X}_o \cdot \left[\left(\delta_{FA_2} - \delta_{FA_4}\right)\vec{i}_B + \left(\delta_{FA_3} - \delta_{FA_5}\right)\vec{k}_B\right](r - r_{FA})\ddot{\theta}^{\circ} m\, dr$$

$$+ \int_{r_{FA}}^{1} \ddot{\theta} I_\theta\, dr$$

The centrifugal acceleration gives

$$M_{FA} = -\Omega^2\left(\int_{r_{FA}}^{1} \vec{X}_o m\, dr \cdot \vec{i}_B z_{FA}\theta_G + \int_{r_{FA}}^{1} \vec{X}_o rm\, dr \cdot \vec{k}_B \beta_G - \int_{r_{FA}}^{1} \tilde{\theta} I_\theta (\cos^2\theta - \sin^2\theta) dr\right.$$

$$+ \int_{r_{FA}}^{1} \vec{X}_o \cdot \left[\vec{i}_B\left(x_{FA} + r_{FA}\delta_{FA_3}\right) + \vec{k}_B r\left(\delta_{FA_1} - \delta_{FA_2}\right)\right] m\, dr + \int_{r_{FA}}^{1} \vec{X}_o \cdot \vec{k}_B \vec{k}_B$$

$$\cdot (x_o \vec{i} + z_o \vec{k} + x_I \vec{i}) m\, dr + \left[\delta_{FA_5}\vec{i}_B - \delta_{FA_4}\vec{k}_B + (x_o \vec{i} + z_o \vec{k})'\big|_{r_{FA}}\right]$$

$$\cdot (z_o \vec{i} - x_o \vec{k})\big|_{r_{FA}} \int_{r_{FA}}^{1} rm\, dr - \int_{r_{FA}}^{1} (x_o \vec{i} + z_o \vec{k} + x_I \vec{i}) \cdot \left\{(z_o \vec{i} - x_o \vec{k})\big|_{r_{FA}}\right.$$

$$\left.\left. - r_{FA}(z_o \vec{i} - x_o \vec{k})'\big|_{r_{FA}} - r_{FA}\left[\left(\delta_{FA_2} - \delta_{FA_4}\right)\vec{i}_B + \left(\delta_{FA_3} - \delta_{FA_5}\right)\vec{k}_B\right]\right\} m\, dr\right)$$

Next, the aerodynamic moment about the feathering axis at r_{FA} is

$$\vec{M}_A = \int_{r_{FA}}^{1} M_a \vec{j}_{XS}\, dr + \int_{r_{FA}}^{1} \left[(r - r_{FA})\vec{j} + (x_o \vec{i} + z_o \vec{k}) - (x_o \vec{i} + z_o \vec{k})\big|_{r_{FA}}\right] \times \vec{F}_{aero}\, dr$$

So

$$M_{FA_A} = \int_{r_{FA}}^{1} M_a\, dr - \int_{r_{FA}}^{1} (F_x \vec{i}_B + F_z \vec{k}_B) \cdot \vec{X}_{A_o}\, dr$$

where

$$\vec{X}_{A_o} = \vec{X}_o - x_I\vec{k}$$

The aerodynamic and inertial moments about the feathering axis are reacted by moments due to the deformation of the control system, moments due to the commanded pitch angle, and moments due to feedback (mechanical or kinematic) from the blade bending or gimbal motion. The restoring moment acting on the blade about the feathering axis is $-M_{con}$, which is given by the product of the elastic deformation in the control system and the control system stiffness K_{con}. Hence

$$M_{con} = K_{con}\left\{\tilde{\theta}^\circ - \theta_{con} + \sum_i K_{P_i} q_i + K_{P_G}\beta_G - (\theta_{1S}\cos\psi_m - \theta_{1C}\sin\psi_m)\psi_s\right\}$$

The variables q_i are the bending degrees of freedom (introduced below), so K_{P_i} is the kinematic pitch/bending coupling due to the control system and blade root geometry. Similarly, K_{P_G} is the pitch/flap coupling for the gimbal motion. For the rigid flap motion of the blade, this coupling is usually expressed in terms of a delta-three (δ_3) angle so that $K_P = \tan\delta_3$. The ψ_S term is the pitch change due to the rotor azimuth perturbation with a fixed swashplate. For a rigid control system ($K_{con} \to \infty$), the rigid pitch equation of motion reduces to

$$p_o = \tilde{\theta}^\circ = \theta_{con} - \sum_i K_{P_i} q_i - K_{P_G}\beta_G + (\theta_{1S}\cos\psi_m - \theta_{1C}\sin\psi_m)\psi_s$$

So, in this limit, p_o becomes just the control input, plus the kinematic coupling terms.

Now the control-system stiffness K_{con} is written in terms of the nonrotating natural frequency of the rigid pitch motion of the blade, ω_o, as

$$K_{con} = \left(\int_{r_{FA}}^{1} I_\theta\, dr\right)\omega_o^2$$

Then the structural pitch moment is

$$M_{FA_E} = \left(\int_{r_{FA}}^{1} I_\theta\, dr\right)\omega_o^2\left\{p_o - \theta_{con} + \sum_i K_{P_i} q_i + K_{P_G}\beta_G - (\theta_{1S}\cos\psi_m - \theta_{1C}\sin\psi_m)\psi_s\right\}$$

2.2.9 Blade force- The net force of the mth blade on the hub is $\vec{F}^{(m)} = \vec{F}_A - \vec{F}_I$, where $\vec{F}$ is the force due to the blade at the hub. The inertial force is

$$\vec{F}_I = \int_o^1 \int \vec{a}\, dm\, dr$$

Then the acceleration due to the shaft motion gives

$$\vec{F} = \int_o^1 m\, dr\, \vec{a}_o + 2\Omega \int_o^1 rm\, dr(\vec{k}_B\vec{j}_B - \vec{j}_B\vec{k}_B)\vec{\omega}_o + \int_o^1 rm\, dr(\vec{k}_B\vec{i}_B - \vec{i}_B\vec{k}_B)\dot{\vec{\omega}}_o$$

The relative acceleration gives

$$\vec{F} = \int_o^1 rm\, dr(-\vec{i}_B\ddot{\psi}_s + \vec{k}_B\ddot{\beta}_G) + \int_o^1 (x_o\vec{i} + z_o\vec{k})^{\cdot\cdot} m\, dr$$

The Coriolis acceleration gives

$$\vec{F} = 2\Omega \int_o^1 \int \vec{k}_B \times \vec{v}_r\, dm\, dr$$

$$= 2\Omega\vec{j}_B\left[- \int_o^1 rm\, dr\, \dot{\psi}_s + \int_o^1 \vec{i}_B \cdot (x_o\vec{i} + z_o\vec{k})^{\cdot} m\, dr\right]$$

The centrifugal acceleration gives

$$\vec{F} = -\Omega^2 \int_o^1 \int (\vec{i}_B\vec{i}_B + \vec{j}_B\vec{j}_B)\vec{r}\, dm\, dr$$

$$= -\Omega^2\left\{\vec{i}_B \int_o^1 \left[-x_{FA} + (r - r_{FA})\delta_{FA_3}\right] m\, dr + \vec{j}_B \int_o^1 rm\, dr - \vec{i}_B \int_o^1 rm\, dr\, \psi_s\right.$$

$$\left. + \vec{i}_B \int_o^1 \vec{i}_B \cdot (x_o\vec{i} + z_o\vec{k} + x_I\vec{i})m\, dr\right\}$$

Finally, the aerodynamic force is

$$\vec{F}_A = \int_o^1 \vec{F}_{aero}\, dr$$

$$= \int_o^1 (F_x\vec{i}_B + F_z\vec{k}_B + \tilde{F}_r\vec{j}_B)dr$$

2.2.10 Blade moment- The net moment of the mth blade on the hub about the gimbal point is $\vec{M}^{(m)} = \vec{M}_A - \vec{M}_I$. The inertial moment is

$$\vec{M}_I = \int_o^1 \int \vec{r} \times \vec{a} \, dm \, dr$$

The acceleration due to the shaft motion gives

$$\vec{M} = \int_o^1 rm \, dr(\vec{i}_B \vec{k}_B - \vec{k}_B \vec{i}_B)\vec{a}_o + 2\Omega \int_o^1 r^2 m \, dr \, \vec{i}_B \vec{j}_B \cdot \vec{\omega}_o$$

$$+ \int_o^1 r^2 m \, dr(\vec{i}_B \vec{i}_B + \vec{k}_B \vec{k}_B)\dot{\vec{\omega}}_o$$

The relative acceleration gives

$$\vec{M} = \int_o^1 rm \, dr(z_{FA}\ddot{\theta}_G \vec{k}_B + x_{FA}\ddot{\theta}_G \vec{i}_B) + \int_o^1 r^2 m \, dr(\vec{k}_B \ddot{\psi}_s + \vec{i}_B \ddot{\beta}_G) + \int_o^1 (z_o \vec{i} - x_o \vec{k})^{\cdot\cdot}$$

$$\times \, rm \, dr - \int_{r_{FA}}^1 \ddot{\theta}[(x_o + x_I)\vec{i} + z_o \vec{k}]rm \, dr - \ddot{\theta}^o \left[\left(\delta_{FA_3} - \delta_{FA_5}\right)\vec{i}_B\right.$$

$$\left. - \left(\delta_{FA_2} - \delta_{FA_4}\right)\vec{k}_B\right] \int_{r_{FA}}^1 (r - r_{FA})rm \, dr$$

The centrifugal acceleration gives

$$\vec{M} = \Omega^2 \vec{i}_B \left\{ \int_o^1 \left[-z_{FA} + r\delta_{FA_1} - (r - r_{FA})\delta_{FA_2}\right] rm \, dr + \int_o^1 r^2 m \, dr \, \beta_G + \int_o^1 \vec{k}_B \right.$$

$$\cdot \, (x_o \vec{i} + z_o \vec{k} + x_I \vec{i})rm \, dr + \int_o^1 \tilde{\theta}\vec{k}_B \cdot (z_o \vec{i} - x_o \vec{k} - x_I \vec{k})rm \, dr$$

$$\left. - \tilde{\theta}^o \left(\delta_{FA_3} - \delta_{FA_5}\right) \int_{r_{FA}}^1 (r - r_{FA})rm \, dr \right\}$$

using the relation

$$\vec{r}\times[\vec{\Omega}\times(\vec{\Omega}\times\vec{r})] = \vec{r}\times\vec{\Omega}\ \vec{\Omega}\cdot\vec{r}$$

$$= -\Omega^2\vec{k}_B\times\vec{r}\ \vec{k}_B\cdot\vec{r}$$

$$\cong -\Omega^2 r(-\vec{i}_B\ \vec{k}_B\cdot\vec{r})$$

Now the Coriolis acceleration is

$$\vec{r}\times\vec{a} = 2\Omega\left\{(\vec{j}_B\times\vec{r})[r\dot{\psi}_s + \vec{k}_B\cdot(z_o\vec{i} - x_o\vec{k})^{\cdot}] + r\vec{k}_B\vec{j}_B\cdot\vec{v}_r\right\}$$

where

$$\vec{j}_B\times\vec{r} = -\vec{k}_B\left[-x_{FA} + (r - r_{FA})\delta_{FA_3}\right] + \vec{i}_B\left[-z_{FA} + r\delta_{FA_1} - (r - r_{FA})\delta_{FA_2}\right]$$

$$+ (z_o\vec{i} - x_o\vec{k} - x_I\vec{k})$$

So

$$\vec{M} = 2\Omega\vec{i}_B\left\{\int_o^1 [r\dot{\psi}_s + \vec{k}_B\cdot(x_o\vec{i} + z_o\vec{k})^{\cdot}]\left[-z_{FA} + r\beta_G + r\delta_{FA_1} - (r - r_{FA})\delta_{FA_2}\right.\right.$$

$$\left.\left. + \vec{i}_B\cdot(z_o\vec{i} - x_o\vec{k} - x_I\vec{k})\right]m\ dr\right\} + 2\Omega\vec{k}_B\left\{-\int_o^1\int_o^r (z_o\vec{i} - x_o\vec{k})'^{\cdot}\cdot(z_o\vec{i} - x_o\vec{k}\right.$$

$$- x_I\vec{k})'d\rho\ rm\ dr + \int_o^1 \vec{i}_B\cdot(z_o\vec{i} - x_o\vec{k})'\left[-r\delta_{FA_1} - r\beta_G + (r - r_{FA})\delta_{FA_2}\right]m\ dr$$

$$+ \int_o^1 \vec{k}_B\cdot(z_o\vec{i} - x_o\vec{k})^{\cdot}\left(x_{FA} + r_{FA}\delta_{FA_3} + z_{FA}\theta_G\right)m\ dr + \int_o^1 \vec{k}_B\cdot(z_o\vec{i} - x_o\vec{k})^{\cdot}\vec{k}_B$$

$$\cdot\ (z_o\vec{i} - x_o\vec{k} - x_I\vec{k})m\ dr - \dot{\beta}_G\int_o^1\left[-z_{FA} + r\beta_G + r\delta_{FA_1} - (r - r_{FA})\delta_{FA_2}\right.$$

$$\left.\left. + \vec{i}_B\cdot(z_o\vec{i} - x_o\vec{k} - x_I\vec{k})\right]rm\ dr\right\}$$

Finally, the aerodynamic moment is

$$\vec{M}_A = \int_o^1 \vec{r}\times\vec{F}_{aero}\ dr$$

$$\cong \int_o^1 (F_z\vec{i}_B - F_x\vec{k}_B)r\ dr$$

2.2.11 Gimbal equation- The equation of motion for the gimbal degrees of freedom are obtained from the $\vec{i}_S$ and $\vec{j}_S$ components of the hub moment $\vec{M} = \sum_m \vec{M}^{(m)}$:

$$\vec{M}_{HS} + \vec{M}_I = \vec{M}_A$$

where $\vec{M}_{HS}$ is the spring and damper moment at the gimbal, reacting the rotor-applied moments. The gimbal spring and damper are assumed to be in the non-rotating frame. Hence

$$\vec{M}_{HS} = \vec{i}_S(K_G\beta_{GS} + C_G\dot{\beta}_{GS}) - \vec{j}_S(K_G\beta_{GC} + C_G\dot{\beta}_{GC})$$

Taking the $\vec{i}_S$ and $\vec{j}_S$ components of $\vec{M}$, the gimbal equations of motion are

$$M_y + C_G\dot{\beta}_{GC} + K_G\beta_{GC} = 0$$

$$-M_x + C_G\dot{\beta}_{GS} + K_G\beta_{GS} = 0$$

The gimbal hub spring and damper coefficients may be written:

$$K_G = \frac{N}{2} I_o\Omega^2(\nu_G{}^2 - 1)$$

$$C_G = \frac{N}{2} I_o\Omega C_G^*$$

where $I_o = \int_o^R r^2 m\, dr$, and ν_G is the rotating natural frequency of the gimbal flap motion.

2.2.12 Modal equations- Consider the equilibrium of the elastic, inertial, and centrifugal bending moments. From the results in section 2.2.6, these terms give the following homogeneous equation for bending of the blade:

$$[(EI_{zz}\vec{i}\vec{i} + EI_{xx}\vec{k}\vec{k})(z_o\vec{i} - x_o\vec{k})'']'' - \Omega^2\left[\int_r^1 \rho m\, d\rho\,(z_o\vec{i} - x_o\vec{k})'\right]'$$

$$- \vec{\Omega}m\vec{\Omega}\cdot(z_o\vec{i} - x_o\vec{k}) + m(z_o\vec{i} - x_o\vec{k})^{\cdot\cdot} = 0$$

This equation may be solved by the method of separation of variables. Writing

$$(z_o\vec{i} - x_o\vec{k}) = \vec{\eta}(r)e^{i\nu t}$$

it becomes

$$(EI\eta'')'' - \Omega^2\left[\int_r^1 \rho m\, d\rho\, \eta'\right]' - \vec{\Omega}m\vec{\Omega}\cdot\vec{\eta} - m\nu^2\vec{\eta} = 0$$

the modal equation for coupled flap/lag bending of the rotating blade. It is an ordinary differential equation for the mode shape $\vec{\eta}(r)$; this mode may be interpreted as the free vibration of the rotating beam at natural frequency ν.

This modal equation, with the appropriate boundary conditions for a cantilevered or hinged blade, is a proper Sturm-Liouville eigenvalue problem. It follows that there exists a series of eigensolutions $\vec{\eta}_k(r)$ of this equation, with corresponding eigenvalues ν_k^2. The eigensolutions or modes are orthogonal with weighting function m; if $i \neq k$,

$$\int_0^1 \vec{\eta}_i \cdot \vec{\eta}_k m \, dr = 0$$

These modes form a complete series, so it is possible to expand the rotor blade bending as a series in the modes:

$$z_o\vec{i} - x_o\vec{k} = \sum_{i=1}^{\infty} q_i(t)\vec{\eta}_i(r)$$

The bending modes are normalized to unit amplitude (dimensionless) at the tip: $|\vec{\eta}(1)| = 1$.

Consider the homogeneous equation for the elastic torsion motion of the nonrotating blade, that is, the balance of structural and inertial torsion moments. The results in section 2.2.7 give

$$-(GJ\theta_e')' + I_\theta\ddot{\theta}_e = 0$$

The equation for the torsion motion of a rotating blade, including centrifugal forces and some additional structural torsion moments, could be used instead. For the torsional stiffness typical of rotor blades, these terms have little effect, however, and the nonrotating torsion modes are an accurate representation of the blade motion. Solving this equation by separation of variables, we write $\theta_e = \xi(r)e^{i\omega t}$, so

$$(GJ\xi')' + I_\theta\omega^2\xi = 0$$

This equation is a proper Sturm-Liousville eigenvalue problem, from which it follows that there exists a series of eigensolutions $\xi_k(r)$ and corresponding eigenvalues ω_k^2 $(k = 1, \ldots, \infty)$. The modes are orthogonal with weighting function I_θ, so if $i \neq k$,

$$\int_{r_{FA}}^1 \xi_k\xi_i I_\theta \, dr = 0$$

The modes form a complete set, so the elastic torsion of the blade may be expanded as a series in the modes:

$$\theta_e = \sum_{i=1}^{\infty} p_i(t)\xi_i(r)$$

These modes are the free vibration shape of the nonrotating blade in torsion, at natural frequency ω_k. The torsion modes are normalized to unity at the tip, $\xi_k(1) = 1$.

2.2.13 Expansion in modes- The bending and torsion motion of the blade is now expanded as series in the normal modes. By this means, the partial differential equations for the motion (in r and t) are converted to ordinary differential equations (in time only) for the degrees of freedom.

For the blade bending, we write

$$(z_o\vec{i} - x_o\vec{k}) = (z_o\vec{i} - x_o\vec{k})_{trim} + \sum_{i=1}^{\infty} q_i(t)\vec{\eta}_i(r)$$

where $\vec{\eta}_i$ are the rotating, coupled bending modes defined above and $(z_o\vec{i} - x_o\vec{k})_{trim}$ is the trim bending deflection. These modes are orthogonal and satisfy the modal equation given above. The variables q_i are the degrees of freedom for the bending motion of the blade. When the substitution for the modal expansion is made, the subscript "trim" will be dropped, as that is all that can be meant by $(z_o\vec{i} - x_o\vec{k})$ then.

For the blade elastic torsion, we write

$$\theta_e = \sum_{i=1}^{\infty} p_i(t)\xi_i(r)$$

where ξ_i are the nonrotating elastic torsion modes. These modes are orthogonal and satisfy the modal equation given above. The variables p_i $(i \geq 1)$ are the degrees of freedom for the elastic torsion motion of the blade. The degree of freedom for rigid pitch motion is $p_o = \tilde{\theta}° = (\theta° - \theta^c) + \theta_{con}$. For rigid rotation about the feathering axis, the mode shape is simply $\xi_o \equiv 1$. Thus the total blade pitch perturbation is expanded as the series:

$$\tilde{\theta} = \sum_{i=0}^{\infty} p_i(t)\xi_i(r)$$

The total blade pitch θ (mean and perturbation) is then

$$\theta = \theta_m + \tilde{\theta} = (\theta_{coll} + \theta_{tw}) + \sum_{i=0}^{\infty} p_i\xi_i$$

Subscript m on the trim pitch angle is dropped when the substitution for the modal expansion is made since it is no longer needed to distinguish between the trim and perturbation quantities.

2.2.14 Fourier coordinate transformation- To this point in the analysis, the equations of motion and the rotor hub reactions have been obtained in the rotating frame, with degrees of freedom describing the motion of each blade separately. In fact, however, the rotor responds as a whole to excitation from the nonrotating frame — shaft motion, aerodynamic gusts, or control inputs. It is desirable to work with degrees of freedom that reflect this behavior. Such a representation of the rotor motion simplifies both the analysis and the understanding of the behavior.

The appropriate transformation to obtain the degrees of freedom and equations of motion in the nonrotating frame is of the Fourier type. There are many similarities between this coordinate change and Fourier series, discrete Fourier transforms, and Fourier interpolation; the common factor is, of course, the periodic nature of the system. A Fourier series representation of the blade motion is appropriate for dealing with the steady-state solution. Here we are considering the general dynamic behavior, including transient motions; hence the Fourier coordinate transformation is required. This coordinate transformation has been widely used in the classical literature, although often with only a heuristic basis. For example, it has been used in ground resonance analyses to represent the rotor lag motion (ref. 4) and in helicopter stability and control analyses for the rotor flap motion (ref. 5). More recently, there have been applications of the Fourier coordinate transformation with a sounder mathematical basis (e.g., ref. 6).

Consider a rotor with N blades equally spaced around the azimuth, at $\psi_m = \psi + m\Delta\psi$ (where $\Delta\psi = 2\pi/N$ and the blade index m ranges from 1 to N). Here $\psi = \Omega t$ is the dimensionless time variable. Let $q^{(m)}$ be the degree of freedom in the rotating frame for the mth blade, m = 1 to N. The Fourier coordinate transformation is a linear transform of the degrees of freedom from the rotating to the nonrotating frame. Thus the following new degrees of freedom are introduced:

$$\beta_o = \frac{1}{N} \sum_{m=1}^{N} q^{(m)}$$

$$\beta_{nc} = \frac{2}{N} \sum_{m=1}^{N} q^{(m)} \cos n\psi_m$$

$$\beta_{ns} = \frac{2}{N} \sum_{m=1}^{N} q^{(m)} \sin n\psi_m$$

$$\beta_{N/2} = \frac{1}{N} \sum_{m=1}^{N} q^{(m)} (-1)^m$$

Here β_o is a collective mode, β_{1C} and β_{1S} are cyclic modes, and $\beta_{N/2}$ is the reactionless mode. For example, for the rotor flap motion, β_o is the coning degree of freedom, while β_{1C} and β_{1S} are the tip-path-plane tilt degrees of freedom. The inverse transformation is

$$q^{(m)} = \beta_o + \sum_n (\beta_{nc} \cos n\psi_m + \beta_{ns} \sin n\psi_m) + \beta_{N/2}(-1)^m$$

which gives the motion of the individual blades again. The summation over n goes from 1 to $(N-1)/2$ for N odd and from 1 to $(N-2)/2$ for N even. The $\beta_{N/2}$ degree of freedom appears in the transformation only if N is even. The corresponding transformation for the velocity and acceleration are

$$\dot{q}^{(m)} = \dot{\beta}_o + \sum_n [(\dot{\beta}_{nc} + n\beta_{ns})\cos n\psi_m + (\dot{\beta}_{ns} - n\beta_{nc})\sin n\psi_m] + \dot{\beta}_{N/2}(-1)^m$$

$$\ddot{q}^{(m)} = \ddot{\beta}_o + \sum_n [(\ddot{\beta}_{nc} + 2n\dot{\beta}_{ns} - n^2\beta_{nc})\cos n\psi_m + (\ddot{\beta}_{ns} - 2n\dot{\beta}_{nc} - n^2\beta_{ns})\sin n\psi_m]$$

$$+ \ddot{\beta}_{N/2}(-1)^m$$

Note that transformation to the nonrotating frame introduces Coriolis and centrifugal terms.

The variables β_o, β_{nc}, β_{ns}, and $\beta_{N/2}$ are degrees of freedom, that is, functions of time, just as the variables $q^{(m)}$ are. These degrees of freedom describe the rotor motion as a whole, in the nonrotating frame, while $q^{(m)}$ describes the motion of an individual blade in the rotating frame. Thus we have a linear, reversible transformation between the N degrees of freedom $q^{(m)}$ in the rotating frame ($m = 1, \ldots, N$) and the N degrees of freedom (β_o, β_{nc}, β_{ns}, $\beta_{N/2}$) in the nonrotating frame. Compare this coordinate transformation with a Fourier series representation of the steady-state solution. In that case, $q^{(m)}$ is a periodic function of ψ_m, so the motions of all the blades are identical. It follows that the motion in the rotating frame may be represented by a Fourier series, the coefficients of which are steady in time but infinite in number. Thus there are similarities between the Fourier coordinate transformation and the Fourier series, but they are by no means identical.

This coordinate transform must be accompanied by a conversion of the equations of motion for $q^{(m)}$ from the rotating to the nonrotating frame. This conversion is accomplished by operating on the equations of motion with the following summation operations:

$$\frac{1}{N}\sum_m (\ldots), \quad \frac{2}{N}\sum_m (\ldots)\cos n\psi_m, \quad \frac{2}{N}\sum_m (\ldots)\sin n\psi_m, \quad \frac{1}{N}\sum_m (\ldots)(-1)^m$$

The result is equations for the β_o, β_{nc}, β_{ns}, and $\beta_{N/2}$ degrees of freedom, respectively. Note that these are the same operations as are involved in transforming the degrees of freedom from the rotating to the nonrotating frame. Since the operators are linear, constants may be factored out. Thus with constant coefficients in the equations of motion, the operators act only on the degrees of freedom. By making use of the definitions of the degrees of freedom in the nonrotating frame, and the corresponding results for the time derivatives, the conversion of the equations of motion is then straightforward. Complexities arise when it is necessary to consider periodic coefficients, such as due to the aerodynamics of the rotor in nonaxial flow (see sections 2.6.3 and 4.1).

The total force and moment on the hub have been obtained by summing the contributions from the individual blades. The result is operators exactly of the form above, for obtaining the total hub reaction in the nonrotating frame from the root reaction of the individual blades in the rotating frame. The origin of the summation operation is clear, and the $\sin \psi_m$ or $\cos \psi_m$ factors arise when the rotating forces are resolved into the nonrotating frame. One may, in fact, view the equation conversion operators in general as simply resolving the moments on the individual blades into the nonrotating frame.

The Fourier coordinate transformation is often associated in rotor dynamics with the generalized Floquet analysis. The latter is a stability analysis for linear differential equations with periodic coefficients. Indeed, there is a fundamental link between these topics because both are associated with the rotation of the system. However, they are, in fact, truly separate subjects — either can be required in the rotor analysis without the other. For example, a rotor in axial flow on a flexible support (or with some other relation to the nonrotating frame) requires the Fourier coordinate transformation to represent the blade motion, but is then a constant coefficient system. Alternatively, for the shaft-fixed dynamics of a rotor in forward flight, a single-blade representation in the rotating frame is appropriate, but there are periodic coefficients due to the forward flight aerodynamics which require the Floquet analysis to determine the system stability.

For the present investigation, the degrees of freedom to be transformed to the nonrotating frame are blade bending, blade pitch, and gimbal motion. The nomenclature for the corresponding degrees of freedom in the rotating and nonrotating frames are as follows:

	Rotating	Nonrotating
Bending	$q_i^{(m)}$	$\beta_o^{(i)}$, $\beta_{nc}^{(i)}$, $\beta_{ns}^{(i)}$, $\beta_{N/2}^{(i)}$
Pitch/torsion	$p_i^{(m)}$	$\theta_o^{(i)}$, $\theta_{nc}^{(i)}$, $\theta_{ns}^{(i)}$, $\theta_{N/2}^{(i)}$
Gimbal	β_G, θ_G	β_{GC}, β_{GS}
Rotor speed	ψ_s	ψ_s

The notation $\beta^{(i)}$ is used for the ith bending mode in the nonrotating frame. With the modes ordered according to frequency, $\beta^{(1)}$ is thus usually the fundamental lag mode, and $\beta^{(2)}$ the fundamental flap mode. Similarly, $\theta^{(i)}$ is the ith torsion mode, with $\theta^{(0)}$ rigid pitch and the remaining modes elastic torsion. The collective and cyclic modes (0,1C,1S) are particularly important because of their fundamental role in the coupled motion of the rotor and the nonrotating system. When the transformation of the equations and degrees of freedom is accomplished, for axial flow there is a complete decoupling of the variables into the following sets:

(a) the collective and cyclic (0,1C,1S) rotor degrees of freedom together with the gimbal tilt and rotor speed degrees of freedom and the rotor shaft motion

(b) the 2C,2S,...,nc,ns, and N/2 rotor degrees of freedom (as present)

Thus the rotor motion in the first set is coupled with the fixed system, while the second set consists of purely internal rotor motion. Nonaxial flow couples, to some extent, all the rotor degrees of freedom and the fixed system variables, primarily due to the aerodynamic terms; still the above separation of the degrees of freedom remains a dominant feature of the rotor dynamic behavior.

In this section, only the case of a three-bladed rotor is considered; thus the collective and cyclic rotor degrees of freedom (0,1C,1S) are the complete description of the rotor motion. The equations are extended to a general number of blades in section 4. With four or more blades, additional degrees of freedom are introduced compared to the $N = 3$ case, while the two-bladed rotor requires special consideration.

2.2.15 Equations of motion- The elements are now available to construct the equations of motion for the blade bending and torsion modes in the rotating frame and to construct the forces and moments acting on the hub due to one blade. The following steps are required:

(a) Substitute for the expansions of the bending and torsion motion as series in the modes.

(b) Use the appropriate modal equation to introduce the mode natural frequency into the bending or torsion equation, replacing the structural stiffness terms (and for bending also some of the centrifugal stiffness terms).

(c) For the bending equation, operate with $\int_0^1 \vec{\eta}_k \cdot (\ldots) dr$ to obtain the ordinary differential euqation for the kth mode of the mth blade (q_k equation).

(d) For the torsion equation, operate with $\int_{r_{FA}}^1 \xi_k (\ldots) dr$ to obtain the ordinary differential equation for the kth mode of the mth blade (p_k equation).

The result is the equations of motion and hub reactions in the rotating frame. The transformation to the nonrotating frame involves the following steps:

(a) Operate on the hub force and moment with $\sum_m(\ldots)$; that is, sum over all N blades to obtain the total force and moment on the hub.

(b) Find the $\vec{i}_S$, $\vec{j}_S$, and $\vec{k}_S$ components of the force and moment in the nonrotating frame (S system).

(c) Write the shaft motion $\vec{a}_o$, $\vec{\omega}_o$, and $\dot{\vec{\omega}}_o$ in terms of the $\vec{i}_S$, $\vec{j}_S$, and $\vec{k}_S$ components in the nonrotating frame (S system).

(d) Apply the Fourier coordinate transform to the equations of motion and rotor degrees of freedom — operate on the equations for bending and torsion with $(1/N)\sum_m(\ldots)$, $(2/N)\sum_m(\ldots)\cos\psi_m$, $(2/N)\sum_m(\ldots)\sin\psi_m$ and introduce the nonrotating degrees of freedom.

Names are now given to all the inertial constants. The equations of motion, hub forces and moments, and inertia constants are also normalized at this point. The inertia constants are divided by the rotor blade characteristic inertia $I_b = \int_o^R r^2 m\, dr$, and we introduce the blade Lock number $\gamma = \rho acR^4/I_b$. This normalization of the inertia constants is denoted by superscript $*$. The rotating equations of motion are divided by I_b; the hub forces and moments are divided by $(N/2)I_b$, except for the rotor thrust and torque, which are divided by NI_b. With this particular normalization, the forces and moments are obtained in rotor coefficient form.

The resulting hub forces and moments are as follows. (The inertial coefficients are defined in appendix A1.)

$$\gamma \frac{2C_H}{\sigma a} = \gamma\left(\frac{2C_H}{\sigma a}\right)_{aero} - 2M_b{}^*\ddot{x}_h + \sum S^*_{q_i} \cdot \vec{k}_B \ddot{\beta}^{(i)}_{1S}$$

$$\gamma \frac{2C_Y}{\sigma a} = \gamma\left(\frac{2C_Y}{\sigma a}\right)_{aero} - 2M_b{}^*\ddot{y}_h - \sum S^*_{q_i} \cdot \vec{k}_B \ddot{\beta}^{(i)}_{1C}$$

$$\gamma \frac{C_T}{\sigma a} = \gamma\left(\frac{C_T}{\sigma a}\right)_{aero} - M_b{}^*\ddot{z}_n - \sum S^*_{q_i} \cdot \vec{i}_B \ddot{\beta}^{(i)}_o$$

$$\gamma \frac{2C_{M_x}}{\sigma a} = \gamma\left(\frac{2C_{M_x}}{\sigma a}\right)_{aero} - I_o{}^*(\ddot{\alpha}_x + 2\dot{\alpha}_y) - I_o{}^*(\ddot{\beta}_{GS} - 2\dot{\beta}_{GC}) - \sum I^*_{q_i\alpha} \cdot \vec{i}_B(\ddot{\beta}^{(i)}_{1S}$$
$$- 2\dot{\beta}^{(i)}_{1C}) + \sum S^*_{p_i\alpha} \cdot \vec{i}_B(\ddot{\theta}^{(i)}_{1S} - 2\dot{\theta}^{(i)}_{1C}) - 2\sum I^*_{\dot{q}_i\alpha}(\dot{\beta}^{(i)}_{1S} - \beta^{(i)}_{1C})$$

$$\gamma \frac{2C_{M_y}}{\sigma a} = \gamma\left(\frac{2C_{M_y}}{\sigma a}\right)_{aero} - I_o^*(\ddot{\alpha}_y - 2\dot{\alpha}_x) + I_o^*(\ddot{\beta}_{GC} + 2\dot{\beta}_{GS}) + \sum I^*_{q_i\alpha} \cdot \vec{i}_B(\ddot{\beta}^{(i)}_{1C}$$

$$+ 2\dot{\beta}^{(i)}_{1S}) - \sum S^*_{p_i\alpha} \cdot \vec{i}_B(\ddot{\theta}^{(i)}_{1C} + 2\dot{\theta}^{(i)}_{1S}) + 2\sum I^*_{\dot{q}_i\alpha}(\dot{\beta}^{(i)}_{1C} + \beta^{(i)}_{1S})$$

$$\gamma \frac{C_Q}{\sigma a} = \gamma\left(\frac{C_Q}{\sigma a}\right)_{aero} + I_o^*\ddot{\alpha}_z + I_o^*\ddot{\psi}_s + \sum I^*_{q_i\alpha} \cdot \vec{k}_B\ddot{\beta}^{(i)}_o - \sum S^*_{p_i\alpha} \cdot \vec{k}_B\ddot{\theta}^{(i)}_o$$

$$- 2\sum I^*_{\dot{q}_i\psi}\dot{\beta}^{(i)}_o$$

The gimbal tilt equations of motion are

$$\gamma \frac{2C_{M_y}}{\sigma a} + I_o^* C_G^* \dot{\beta}_{GC} + I_o^*(\nu_G^2 - 1)\beta_{GC} = 0$$

$$-\gamma \frac{2C_{M_x}}{\sigma a} + I_o^* C_G^* \dot{\beta}_{GS} + I_o^*(\nu_G^2 - 1)\beta_{GS} = 0$$

Finally, the equations of motion for coupled flap/lag bending and for elastic torsion/rigid pitch of the blade in the rotating frame are

$$I^*_{q_k}(\ddot{q}_k + g_S\nu_k\dot{q}_k + \nu_k^2 q_k) + 2\sum I^*_{q_k\dot{q}_i}\dot{q}_i - \sum S^*_{q_k\ddot{p}_i}\ddot{p}_i - \sum S^*_{q_k p_i} p_i$$

$$+ I^*_{q_k\alpha} \cdot \vec{k}_B\ddot{\psi}_s + I^*_{q_k\alpha} \cdot \vec{i}_B(\ddot{\beta}_G + \beta_G) + 2I^*_{q_k\dot{\psi}}\dot{\psi}_s - I^*_{\dot{q}_k\alpha}(\ddot{\theta}_G - \theta_G + 2\dot{\beta}_G)$$

$$+ S^*_{q_k} \cdot \vec{i}_B\ddot{z}_h - S^*_{q_k} \cdot \vec{k}_B(\ddot{x}_h \sin\psi_m - \ddot{y}_h \cos\psi_m) + I^*_{q_k\alpha} \cdot \vec{k}_B\ddot{\alpha}_z$$

$$+ I^*_{q_k\alpha} \cdot \vec{i}_B[(\ddot{\alpha}_x + 2\ddot{\alpha}_y)\sin\psi_m - (\ddot{\alpha}_y - 2\dot{\alpha}_x)\cos\psi_m] = \gamma \frac{M_{q_k aero}}{ac} + I^*_{q_k o}$$

$$I^*_{p_k}(\ddot{p}_k + g_s\omega_k\dot{p}_k + \omega_k^2 p_k) + \sum I^*_{p_k\ddot{p}_i}\ddot{p}_i + \sum I^*_{p_k p_i} p_i - \sum S^*_{p_k\ddot{q}_i}\ddot{q}_i - \sum S^*_{p_k q_i} q_i$$

$$+ I^*_{p_k\alpha} \cdot \vec{i}_B\ddot{\psi}_s - I^*_{p_k\alpha} \cdot \vec{k}_B(\ddot{\beta}_G + \beta_G) - S^*_{p_k\ddot{\alpha}}(\ddot{\theta}_G + 2\dot{\beta}_G - \theta_G) + S^*_{p_k o} K_{P_G}\beta_G$$

$$+ S^*_{p_k o}(\theta_{1C}\sin\psi_m - \theta_{1S}\cos\psi_m)\psi_s - S^*_{p_k} \cdot \vec{k}_B\ddot{z}_h - S^*_{p_k} \cdot \vec{i}_B(\ddot{x}_h \sin\psi_m - \ddot{y}_h \cos\psi_m)$$

$$+ I^*_{p_k\alpha} \cdot \vec{i}_B\ddot{\alpha}_z - I^*_{p_k\alpha} \cdot \vec{k}_B[(\ddot{\alpha}_x + 2\dot{\alpha}_y)\sin\psi_m - (\ddot{\alpha}_y - 2\dot{\alpha}_x)\cos\psi_m]$$

$$= \gamma \frac{M_{p_k aero}}{ac} + [I^*_{p_o}\omega_o^2\xi_k(r_{FA})]\theta_{con}$$

Note that the structural damping terms have been included in the bending and torsion equations, modeled as equivalent viscous damping. The structural damping parameter g_s (equal to twice the equivalent damping ratio) generally is different for each degree of freedom. The bending and torsion equations in the nonrotating frame are presented later (section 2.6). (The inertial coefficients are defined in appendix A.)

The aerodynamic forces required are

$$\frac{2C_H}{\sigma a} = \frac{2}{N}\sum_m\left(\sin\psi_m \int_o^1 \frac{F_x}{ac}\,dr + \cos\psi_m \int_o^1 \frac{\tilde{F}_r}{ac}\,dr\right)$$

$$\frac{2C_Y}{\sigma a} = -\frac{2}{N}\sum_m\left(\cos\psi_m \int_o^1 \frac{F_x}{ac}\,dr - \sin\psi_m \int_o^1 \frac{\tilde{F}_r}{ac}\,dr\right)$$

$$\frac{C_T}{\sigma a} = \frac{1}{N}\sum_m \int_o^1 \frac{F_z}{ac}\,dr$$

$$\frac{2C_{M_x}}{\sigma a} = \frac{2}{N}\sum_m \sin\psi_m \int_o^1 \frac{F_z}{ac}\,r\,dr$$

$$\frac{2C_{M_y}}{\sigma a} = -\frac{2}{N}\sum_m \cos\psi_m \int_o^1 \frac{F_z}{ac}\,r\,dr$$

$$\frac{C_Q}{\sigma a} = \frac{1}{N}\sum_m \int_o^1 \frac{F_x}{ac}\,r\,dr$$

$$\frac{M_{q_k\text{aero}}}{ac} = \int_o^1 \vec{\eta}_k \cdot \left(\frac{F_z}{ac}\,\vec{i}_B - \frac{F_x}{ac}\,\vec{k}_B\right)dr$$

$$\frac{M_{p_k\text{aero}}}{ac} = \int_{r_{FA}}^1 \xi_k \frac{M_a}{ac}\,dr - \int_{r_{FA}}^1 \left(\frac{F_x}{ac}\,\vec{i}_B + \frac{F_z}{ac}\,\vec{k}_B\right)\cdot \vec{X}_{A_k}\,dr$$

where

$$\vec{X}_{A_k} = \vec{X}_k - \xi_k x_I \vec{k}$$

2.3 Aerodynamic Analysis

In this section, the aerodynamic forces and moments on the rotor blade are derived. We shall consider the general case of high or low inflow and axial or nonaxial flight. The aerodynamic terms in the rotor equations of motion and the hub forces and moments are obtained for two cases: axial flow, which involves constant coefficient equations, and nonaxial flow with periodic coefficients.

The principal assumptions in the aerodynamic analysis are: lifting line theory (i.e., strip theory or blade element theory) is used to calculate the section loading; the order c (rotor chord) terms in the aerodynamic lift are neglected; the order c^3 terms in the aerodynamic moment are neglected; virtual mass aerodynamic forces and moments are neglected; only first-order velocity terms are retained; and aerodynamic interference effects between the rotor and support are neglected. The analysis includes reverse-flow and large-angle effects. The effects of transient inflow changes on the system dynamics are also included, using an elementary model described in section 2.5.

2.3.1 Section aerodynamic forces- A hub plane reference frame is used for the aerodynamic forces. All forces and velocities are then resolved in the hub plane (i.e., in the B system). The hub plane reference frame is fixed with respect to the shaft; hence it is tilted and displaced by the shaft motion. Figure 10 illustrates the forces and velocities of the blade section aerodynamics. The velocity of the air seen by the blade, the pitch angle, and the angle of attack are defined as: θ is the blade pitch, measured from the reference plane; u_T, u_P, and u_R are the components of the air velocity seen by the blade, resolved with respect to the reference frame; $U = (u_T^2 + u_P^2)^{1/2}$ is the resultant air velocity in the plane of the section; $\phi = \tan^{-1} u_P/u_T$ is the induced angle; and $\alpha = \theta - \phi$ is the section angle of attack. The velocity u_T is in the hub plane, positive in the blade drag direction; u_R is in the hub plane, positive radially outward along the blade; and u_P is normal to the hub plane, positive down through the rotor disk. The aerodynamic forces and moment on the section, at the elastic axis, are defined as: L and D are the aerodynamic lift and drag forces on the section, respectively, normal and parallel to the resultant velocity U; F_z and F_x are the components of the total aerodynamic force on the section resolved with respect to the hub plane, normal to and in the plane of the rotor; F_r is the radial drag force on the blade, positive outward (same direction as positive u_R); and M_a is the section aerodynamic moment about the elastic axis, positive nose-up. The radial forces due to the tilt of F_z and F_x are considered separately; hence F_r consists only of the radial drag force.

The section lift and drag are

$$L = \frac{1}{2} \rho U^2 c c_\ell$$

$$D = \frac{1}{2} \rho U^2 c c_d$$

where U is the resultant velocity at the section, ρ is the air density, and c is the chord of the blade. The air density is dropped at this point in the analysis while the quantities are made dimensionless by use of ρ, Ω, and R. The section lift and drag coefficients, $c_\ell = c_\ell(\alpha, M)$ and $c_d = c_d(\alpha, M)$ are functions of the section angle of attack and Mach number:

$$\alpha = \theta - \phi = \theta - \tan^{-1} u_P/u_T$$

$$M = M_{TIP}U$$

where M_{TIP} is the tip Mach number — the rotor tip speed ΩR divided by the speed of sound. The dependence of c_ℓ and c_d on other quantities, such as the local yaw angle or unsteady angle of attack changes, is neglected. The radial drag force is

$$F_r = (u_R/U)D = \frac{1}{2} Uu_R cc_d$$

This radial drag force is based on the assumption that the viscous drag force on the section has the same sweep angle as the local section velocity. The moment about the elastic axis is

$$M_a = -x_{A_e} L + M_{AC} + M_{US}$$

$$= -x_{A_e} \frac{1}{2} U^2 cc_\ell + \frac{1}{2} U^2 c^2 c_{m_{ac}} + M_{US}$$

where x_A is the distance the aerodynamic center is behind the elastic axis, $c_{m_{ac}}$ is the section moment about the aerodynamic center (positive nose-up), and M_{US} is the unsteady aerodynamic moment. The effective distance between the aerodynamic center and elastic axis is

$$x_{A_e} = \begin{cases} x_A & \text{Normal flow} \\ -\left(x_A + \frac{c}{2}\right) & \text{Reverse flow} \end{cases}$$

For the section aerodynamic moment, it is necessary to include the unsteady aerodynamic terms, which, from thin airfoil theory (ref. 7), are

$$\frac{M_{US}}{ac} = -\frac{c^2}{32}\left\{VB\left[1 + 8\frac{x_{A_e}}{c} + 16\left(\frac{x_{A_e}}{c}\right)^2\right] + (\dot{w} + u_R w')\left(1 + 4\frac{x_{A_e}}{c}\right)\right\} \text{sign}(V)$$

Here w is the upwash velocity normal to the blade surface ($w = u_T \sin\theta - u_P \cos\theta$), $B = dw/dx$ (mainly, the pitch rate $\dot{\theta}$), and $V = u_T \cos\theta + u_P \sin\theta$. For stalled flow, the unsteady moment is set to zero ($M_{US} = 0$).

The aerodynamic forces with respect to the hub plane axes are then

$$F_z = L \cos \phi - D \sin \phi = (Lu_T - Du_P)/U$$

$$F_x = L \sin \phi + D \cos \phi = (Lu_P + Du_T)/U$$

Substituting for L and D and dividing by a, the two-dimensional section lift-curve slope, and by c_m, the mean section chord (which enter the Lock number γ also), we obtain

$$\frac{F_z}{ac} = U\left(u_T \frac{c_\ell}{2a} - u_P \frac{c_d}{2a}\right) \frac{c}{c_m}$$

$$\frac{F_x}{ac} = U\left(u_P \frac{c_\ell}{2a} + u_T \frac{c_d}{2a}\right) \frac{c}{c_m}$$

$$\frac{F_r}{ac} = Uu_R \frac{c_d}{2a} \frac{c}{c_m}$$

$$\frac{M_a}{ac} = \left(-x_{A_e} U^2 \frac{c_\ell}{2a} + U^2 \frac{cc_m{}_{ac}}{2a} + \frac{M_{US}}{ac}\right) \frac{c}{c_m}$$

The net rotor aerodynamic forces are obtained by integrating the section forces over the span of the blade and then summing over all N blades.

2.3.2 Perturbation forces- Each component of the velocity seen by the blade has a trim term due to operation of the rotor in its trim equilibrium state and a perturbation term due to the perturbed motion of the system. The latter results from the system degrees of freedom and is assumed to be small when the linear differential equations that describe the dynamics are obtained. The blade pitch and section velocities are written trim plus perturbation terms:

$$\theta \Rightarrow \theta + \delta\theta$$

$$u_T \Rightarrow u_T + \delta u_T$$

$$u_P \Rightarrow u_P + \delta u_P$$

$$u_R \Rightarrow u_R + \delta u_R$$

It follows that the perturbations of α, U, and M are

$$\delta\alpha = \delta\theta - (u_T\delta u_P - u_P\delta u_T)/U^2$$

$$\delta U = (u_T\delta u_T + u_P\delta u_P)/U$$

$$\delta M = M_{TIP}\delta U$$

and the perturbations of the aerodynamic coefficients are

$$\delta c_\ell = \frac{\partial c_\ell}{\partial\alpha}\,\delta\alpha + \frac{\partial c_\ell}{\partial M}\,\delta M = c_{\ell_\alpha}\,\delta\alpha + c_{\ell_M}\,\delta M$$

(similarly for c_m and c_d). The perturbations of the section aerodynamic forces may then be obtained by carrying out the differential operation on the expressions for F_z, F_x, F_r, and M_a, using the above results to express the perturbations in terms of $\delta\theta$, δu_T, δu_P, and δu_R. The coefficients of the perturbation quantities are then evaluated at the trim state. The results for the perturbation forces are:

$$\delta\frac{F_z}{ac} = \left(Uu_T\frac{c_{\ell_\alpha}}{2a} - Uu_P\frac{c_{d_\alpha}}{2a}\right)\frac{c}{c_m}\,\delta\theta + \left[-\frac{u_T}{U}\left(u_T\frac{c_{\ell_\alpha}}{2a} - u_P\frac{c_{d_\alpha}}{2a}\right) + \left(\frac{c_\ell}{2a} + M\frac{c_{\ell_M}}{2a}\right)\frac{u_Tu_P}{U}\right.$$

$$\left. - \left(\frac{c_d}{2a} + M\frac{c_{d_M}}{2a}\right)\frac{u_P^2}{U} - \frac{c_d}{2a}U\right]\frac{c}{c_m}\,\delta u_P + \left[\frac{u_P}{U}\left(u_T\frac{c_{\ell_\alpha}}{2a} - u_P\frac{c_{d_\alpha}}{2a}\right)\right.$$

$$\left. + \left(\frac{c_\ell}{2a} + M\frac{c_{\ell_M}}{2a}\right)\frac{u_T^2}{U} + \frac{c_\ell}{2a}U - \left(\frac{c_d}{2a} + M\frac{c_{d_M}}{2a}\right)\frac{u_Tu_P}{U}\right]\frac{c}{c_m}\,\delta u_T$$

$$= F_{z_\theta}\delta\theta + F_{z_P}\delta u_P + F_{z_T}\delta u_T$$

$$\delta\frac{F_x}{ac} = \left(Uu_P\frac{c_{\ell_\alpha}}{2a} + Uu_T\frac{c_{d_\alpha}}{2a}\right)\frac{c}{c_m}\,\delta\theta + \left[-\frac{u_T}{U}\left(u_P\frac{c_{\ell_\alpha}}{2a} + u_T\frac{c_{d_\alpha}}{2a}\right) + \left(\frac{c_\ell}{2a} + M\frac{c_{\ell_M}}{2a}\right)\frac{u_P^2}{U}\right.$$

$$\left. + \frac{c_\ell}{2a}U + \left(\frac{c_d}{2a} + M\frac{c_{d_M}}{2a}\right)\frac{u_Tu_P}{U}\right]\frac{c}{c_m}\,\delta u_P + \left[\frac{u_P}{U}\left(u_P\frac{c_{\ell_\alpha}}{2a} + u_T\frac{c_{d_\alpha}}{2a}\right)\right.$$

$$\left. + \left(\frac{c_\ell}{2a} + M\frac{c_{\ell_M}}{2a}\right)\frac{u_Pu_T}{U} + \left(\frac{c_d}{2a} + M\frac{c_{d_M}}{2a}\right)\frac{u_T^2}{U} + \frac{c_d}{2a}U\right]\frac{c}{c_m}\,\delta u_T$$

$$= F_{x_\theta}\delta_\theta + F_{x_P}\delta u_P + F_{x_T}\delta u_T$$

$$\delta \frac{F_r}{ac} = \left(Uu_R \frac{c_{d_\alpha}}{2a}\right) \frac{c}{c_m} \delta\theta + \left[- \frac{u_T u_R}{U} \frac{c_{d_\alpha}}{2a} + \left(\frac{c_d}{2a} + M \frac{c_{d_M}}{2a}\right) \frac{u_R u_P}{U}\right] \frac{c}{c_m} \delta u_P$$

$$+ \left[\frac{u_P u_R}{U} \frac{c_{d_\alpha}}{2a} + \left(\frac{c_d}{2a} + M \frac{c_{d_M}}{2a}\right) \frac{u_R u_T}{U}\right] \frac{c}{c_m} \delta u_T + \left(U \frac{c_d}{2a}\right) \frac{c}{c_m} \delta u_R$$

$$= F_{r_\theta} \delta\theta + F_{r_P} \delta u_P + F_{r_T} \delta u_T + F_{r_R} \delta u_R$$

$$\delta \frac{M_a}{ac} = \left[U^2 \left(-x_{A_e} \frac{c_{\ell_\alpha}}{2a} + c \frac{c_{m_\alpha}}{2a}\right)\right] \frac{c}{c_m} \delta\theta + \left[u_P \left(- x_{A_e} \frac{c_{\ell_\alpha}}{2a} + c \frac{c_{m_\alpha}}{2a}\right)\right.$$

$$\left. - x_{A_e} u_T \left(2 \frac{c_\ell}{2a} + M \frac{c_{\ell_M}}{2a}\right) + cu_T \left(2 \frac{c_m}{2a} + M \frac{c_{m_M}}{2a}\right)\right] \frac{c}{c_m} \delta u_T + \left[-u_T \left(-x_{A_e} \frac{c_{\ell_\alpha}}{2a}\right.\right.$$

$$\left.\left. + c \frac{c_{m_\alpha}}{2a}\right) - x_{A_e} u_P \left(2 \frac{c_\ell}{2a} + M \frac{c_{\ell_M}}{2a}\right) + cu_P \left(2 \frac{c_m}{2a} + M \frac{c_{m_M}}{2a}\right)\right] \frac{c}{c_m} \delta u_P + \frac{M_{US}}{ac} \frac{c}{c_m}$$

$$= M_{a_\theta} \delta\theta + M_{a_P} \delta u_P + M_{a_T} \delta u_T + \frac{M_{US}}{ac} \frac{c}{c_m}$$

2.3.3 Blade velocity- Now the air velocity seen by the blade section is considered: the trim velocity, composed of the forward speed, rotor rotation, and rotor-induced velocity terms; the perturbation velocities due to the rotor degrees of freedom and the shaft motion, and to the aerodynamic gust velocity.

The rotor is rotating at constant speed Ω. The velocity of the rotor with respect to the air is defined in figure 11. The rotor has a steady trim velocity V in inertial axes and a trim angle of attack α_{HP} of the rotor hub plane with respect to V. The velocity vector is in the rotor x-z plane, and α_{HP} is positive for forward tilt of the disk, producing a component of V downward through the disk. The rotor wake-induced velocity v is assumed to be uniform over the disk and normal to the hub plane (fig. 11). Following standard helicopter practice, the rotor advance ratio μ and inflow ratio λ are defined as

$$\mu = V \cos \alpha_{HP}/\Omega R$$

$$\lambda = (v + V \sin \alpha_{HP})/\Omega R$$

The advance and inflow ratios are the dimensionless components of the rotor velocity in the hub plane axis system. The inflow ratio λ is usually small for helicopter operation; the analysis is applicable to large inflow as well, however (as would be encountered, e.g., in proprotor operation). The advance ratio μ is zero for hover and axial flow, and $\mu > 0$ for helicopter forward flight. Note that, in body axes, the trim velocity vector is fixed with the reference frame and would therefore tilt with it. However, for the rotor and wind-tunnel support analysis, an inertial frame is used, so that tilt of the rotor by the shaft motion results in a small change in the directions of λ and μ as seen in the reference frame.

The rotor-induced velocity is obtained using the momentum theory result:

$$\lambda = \mu_z + \frac{C_T}{2\sqrt{\lambda^2/\kappa_h{}^4 + \mu^2/\kappa_f{}^2}}$$

where $\mu_z = \mu \tan \alpha_{HP}$. Empirical correction factors κ_h and κ_f are included for the effects of nonuniform inflow, tip losses, swirl, blockage, etc., in hover and forward flight. For the vortex ring and turbulent wake states, this momentum theory result is not applicable. Thus, if

$$\mu^2 + (2\mu_z + 3\lambda_h)^2 < \lambda_h{}^2$$

the following expression is used instead:

$$\lambda = \mu_z + \kappa_h \mu_z \left(\frac{0.373\mu_z{}^2 + 0.598\mu^2}{\lambda_h{}^2} - 1.991 \right)$$

where $\lambda_h = \sqrt{C_T/2}$.

The shaft motion consists of small linear and angular velocity, with components defined in the nonrotating frame:

$$\vec{v}_o = \dot{x}_h \vec{i}_S + \dot{y}_h \vec{j}_S + \dot{z}_h \vec{k}_S$$

$$\vec{\omega}_o = \dot{\alpha}_x \vec{i}_S + \dot{\alpha}_y \vec{j}_S + \dot{\alpha}_z \vec{k}_S$$

The aerodynamic gust velocity has components u_G, v_G, and w_G (longitudinal, lateral, and vertical, respectively) defined with respect to the shaft axes (fig. 11); these components are the velocity seen by the aircraft and are assumed to be small compared to ΩR. The gust components are normalized by dividing by ΩR, not by V as is often the practice for airplane analyses. The aerodynamic gust is assumed to be uniform throughout space. Eventually, the gust vector will be transformed to wind or tunnel axes (see section 3.1.4), but shaft axes are used in the development of the rotor equations of motion.

The result for the trim velocity terms is

$$u_T = r + \mu \sin \psi_m - \mu \cos \psi_m \left[\delta_{FA_3} - \vec{k}_B \cdot (z_o\vec{i} - x_o\vec{k})'_{trim}\right] + \vec{k}_B \cdot (z_o\vec{i} - x_o\vec{k})^{\bullet}_{trim}$$

$$u_P = \lambda + \vec{i}_B \cdot (z_o\vec{i} - x_o\vec{k})^{\bullet}_{trim} + r\dot{\beta}_{G_{trim}} + \mu \cos \psi_m \left[\delta_{FA_1} - \delta_{FA_2} + \beta_{G_{trim}}\right.$$
$$\left. + \vec{i}_B \cdot (z_o\vec{i} - x_o\vec{k})'_{trim}\right]$$

$$u_R = \mu \cos \psi_m + \left(x_{FA} + r_{FA}\delta_{FA_3}\right) + \vec{k}_B \cdot [(z_o\vec{i} - x_o\vec{k})_{trim} - r(z_o\vec{i} - x_o\vec{k})'_{trim}]$$
$$- \lambda\left[\delta_{FA_1} - \delta_{FA_2} + \beta_{G_{trim}} + \vec{i}_B \cdot (z_o\vec{i} - x_o\vec{k})'_{trim}\right]$$
$$+ \mu \sin \psi_m \left[\delta_{FA_3} - \vec{k}_B \cdot (z_o\vec{i} - x_o\vec{k})'_{trim}\right]$$

and for the trim pitch angle:

$$\theta = \theta_{coll} + \theta_{tw} + \theta_{cyc} - K_{P_G}\beta_{G_{trim}} - \Sigma K_{P_i} q_{i_{trim}}$$

Here θ_{cyc} is the input cyclic pitch required to trim the rotor. For trim velocity, the blade bending and gimbal motion is periodic. For axial flight, $\mu = 0$, the trim velocities are constant; for nonaxial flow, $\mu > 0$, these velocities are periodic in ψ_m due to the rotation of the blade with respect to the rotor forward velocity.

The result for the perturbations of the velocity components and the blade pitch, due to the rotor and shaft motion and the aerodynamic gust, is then:

$$\delta u_T = (\lambda\alpha_x + \dot{y}_h + v_G)\cos \psi_m + (\lambda\alpha_y - \dot{x}_h + u_G)\sin \psi_m + \mu \cos \psi_m(\alpha_z + \psi_s)$$
$$+ r(\dot{\alpha}_z + \dot{\psi}_s) + \Sigma \dot{q}_i(\vec{k}_B \cdot \vec{\eta}_i) + \mu \cos \psi_m \Sigma q_i(\vec{k}_B \cdot \vec{\eta}'_i)$$

$$\delta u_P = (\dot{z}_h - \mu\alpha_y - w_G) + \mu \cos \psi_m\beta_G + r(\dot{\beta}_G + \dot{\alpha}_x \sin \psi_m - \dot{\alpha}_y \cos \psi_m)$$
$$+ \Sigma \dot{q}_i(\vec{i}_B \cdot \vec{\eta}_i) + \mu \cos \psi_m \Sigma q_i(\vec{i}_B \cdot \vec{\eta}'_i)$$

$$\delta u_R = -(\lambda\alpha_x + \dot{y}_h + v_G)\sin \psi_m + (\lambda\alpha_y - \dot{x}_h + u_G)\cos \psi_m - \lambda\beta_G - \mu \sin \psi_m(\alpha_z + \psi_s)$$
$$+ \Sigma q_i[\vec{k}_B \cdot (\vec{\eta}_i - r\vec{\eta}'_i - \mu \sin \psi_m\vec{\eta}'_i) - \lambda\vec{i}_B \cdot \vec{\eta}'_i]$$

$$\delta\theta = \tilde{\theta} = \Sigma p_i\xi_i$$

Finally, the quantities required for the unsteady pitch moment are

$$V = u_T \cos\theta + u_P \sin\theta$$

$$B = \dot{\theta} + \beta_G + \Sigma\, q_i \vec{i}_B \cdot \vec{\eta}_i'$$

$$\dot{w} + u_R w = \Sigma\, \dot{p}_i \xi_i V + u_R \Sigma\, p_i \xi_i' V - \dot{\beta}_G 2u_R \cos\theta + \beta_G \mu \sin\psi_m \cos\theta$$

$$+ (\dot{\alpha}_z + \dot{\psi}_s) 2u_R \sin\theta - (\alpha_z + \psi_s)\mu \sin\psi_m \sin\theta - 2u_R \Sigma\, \dot{q}_i \vec{i} \cdot \vec{\eta}_i'$$

$$+ \Sigma\, q_i (\mu \sin\psi_m \vec{i} \cdot \vec{\eta}_i' - u_R^2 \vec{i} \cdot \vec{\eta}_i'')$$

2.3.4 Rotor aerodynamic forces- Combining the expansions for the section forces and moment in terms of the velocity perturbations, and the velocity in terms of the motion of the rotor and shaft, we may obtain the perturbations of the aerodynamic forces on the blade. These are the blade forces expanded as linear combinations of the degrees of freedom. Giving names to the aerodynamic coefficients at this point in the analysis, the results for the required aerodynamic forces on the rotating blade are as follows. The aerodynamic force for rotor bending is

$$\int_0^1 \vec{\eta}_k \cdot \left(\frac{F_z}{ac}\vec{i}_B - \frac{F_x}{ac}\vec{k}_B\right) dr = M_{q_k o} + M_{q_k \mu}[(\lambda\alpha_x + \dot{y}_h + v_G)\cos\psi_m + (\lambda\alpha_y - \dot{x}_h$$

$$+ u_G)\sin\psi_m] + M_{q_k \dot{\zeta}}(\dot{\alpha}_z + \dot{\psi}_s) + M_{q_k \zeta}(\alpha_z + \psi_s)$$

$$+ M_{q_k \lambda}(\dot{z}_h - \mu\alpha_y - w_G) + M_{q_k \dot{\beta}}(\dot{\beta}_G + \dot{\alpha}_x \sin\psi_m$$

$$- \dot{\alpha}_y \cos\psi_m) + M_{q_k \beta}\beta_G + \Sigma\, M_{q_k \dot{q}_i}\dot{q}_i + \Sigma\, M_{q_k q_i} q_i$$

$$+ \Sigma\, M_{q_k p_i} p_i$$

The radial force is

$$\int_0^1 \frac{\tilde{F}_r}{ac}\, dr = \int_0^1 \left\{\frac{F_r}{ac} - \frac{F_z}{ac}\left[\beta_G + \delta_{FA_1} - \delta_{FA_2} + \vec{k}_B \cdot (x_o\vec{i} + z_o\vec{k})'\right]\right.$$

$$\left. - \frac{F_x}{ac}\left[-\psi_s + \delta_{FA_3} + \vec{i}_B \cdot (x_o\vec{i} + z_o\vec{k})'\right]\right\} dr$$

$$= R_\mu[-(\lambda\alpha_x + \dot{y}_h + v_G)\sin\psi_m + (\lambda\alpha_y - \dot{x}_h + u_G)\cos\psi_m] + R_r[(\lambda\alpha_x + \dot{y}_h$$

$$+ v_G)\cos\psi_m + (\lambda\alpha_y - \dot{x}_h + u_G)\sin\psi_m] + R_{\dot{\zeta}}(\dot{\alpha}_z + \dot{\psi}_s) + R_\zeta(\alpha_z + \psi_s)$$

$$+ R_\lambda(\dot{z}_h - \mu\alpha_y - w_G) + R_{\dot{\beta}}(\dot{\beta}_G + \dot{\alpha}_x \sin\psi_m - \dot{\alpha}_y \cos\psi_m) + R_\beta \beta_G$$

$$+ \Sigma\, R_{\dot{q}_i}\dot{q}_i + \Sigma\, R_{q_i} q_i + \Sigma\, R_{p_i} p_i$$

The aerodynamic force for blade torsion and pitch is

$$\int_{r_{FA}}^{1} \xi_k \frac{M_a}{ac}\, dr - \int_{r_{FA}}^{1} \left(\frac{F_x}{ac} \vec{i}_B + \frac{F_z}{ac} \vec{k}_B \right) \cdot \vec{X}_{A_k}\, dr$$

$$= M_{p_k \mu} [(\lambda \alpha_x + \dot{y}_h + v_G) \cos \psi_m + (\lambda \alpha_y - \dot{x}_h + u_G) \sin \psi_m] + M_{p_k \dot{\zeta}} (\dot{\alpha}_z + \dot{\psi}_s)$$

$$+ M_{p_k \zeta} (\alpha_z + \psi_s) + M_{p_k \lambda} (\dot{z}_h - \mu \alpha_y - w_G) + M_{p_k \dot{\beta}} (\dot{\beta}_G + \dot{\alpha}_x \sin \psi_m - \dot{\alpha}_y \cos \psi_m)$$

$$+ M_{p_k \beta} \beta_G + \Sigma M_{p_k \dot{q}_i} \dot{q}_i + \Sigma M_{p_k q_i} q_i + \Sigma M_{p_k \dot{p}_i} \dot{p}_i + \Sigma M_{p_k p_i} p_i$$

Finally, the aerodynamic hub forces and moments are similar to the result for the blade bending, but with the following changes in the integrands and notation:

	Integrand	Coefficient notation
Flap moment	rF_z	M
Torque	rF_x	Q
Blade drag force	F_x	H
Thrust	F_z	T

Combining the results for the exapnsion of the aerodynamic forces, and the expansions of the velocities, the aerodynamic coefficients can be evaluated. The coefficients of the degrees of freedom in the aerodynamic forces are constant for axial flow, but for nonaxial flow they are periodic functions of ψ_m. (The aerodynamic coefficients are defined in appendix A2.)

2.4 Rotor Speed and Engine Dynamics

The rotor rotational speed degree of freedom ($\dot{\psi}_s$) is frequently an important factor in rotorcraft dynamics. With a turboshaft engine, the rotor behaves almost as a windmill. For a powered wind-tunnel model with an electric motor, the motor inertia and damping can significantly reduce the rotor speed perturbations. The equation of motion for ψ_s is given by the rotor torque equilibrium. We shall examine the extremes of a windmilling rotor and constant rotor speed and then derive a more general model including the engine inertia and damping.

For windmilling or autorotation operation, the rotor is free to turn on the shaft. No torque moments are transmitted from the rotor to the shaft and no shaft rotational motion is transmitted to the rotor. The equation of motion for the rotor speed perturbation ($\dot{\psi}_s$) is just $Q = 0$, or $\gamma C_Q/\sigma a = 0$. In axial flow, there is no spring term in the ψ_s equation, so the system is

first order in ψ_s. The rotor azimuth perturbation ψ_s is defined with respect to the shaft axes, which also have a yaw angle α_z; thus the rotor speed perturbation with respect to space is $\dot{\psi}_s + \dot{\alpha}_z$.

For constant rotor speed, the ψ_s degree of freedom and equation of motion are dropped from the system (i.e., the appropriate row and column are eliminated from the coefficient matrices). The solution for the rotor speed perturbation is just $\psi_s = 0$, so the rotational speed with respect to the shaft axes is constant at Ω.

Now consider a more general case, including the inertia and damping of the engine or motor. Any drive train flexibility is neglected since it usually does not have a major role in the rotor dynamics. Thus the engine model used does not add degrees of freedom to the analysis, it simply includes the engine inertia and damping in the rotor torque equilibrium. The engine effects are, of course, amplified by the transmission gear ratio. The equation of motion for ψ_s is then

$$Q = -I_E r_E^2 \ddot{\psi}_s - Q_\Omega r_E^2 \dot{\psi}_s$$

where I_E is the engine rotary inertia, r_E is the transmission gear ratio, and $Q_\Omega = dQ_E/d\Omega_E$ is the engine speed damping coefficient. Normalizing as usual, the equation becomes

$$\gamma \frac{C_Q}{\sigma a} + r_E^2 I_E^* \ddot{\psi}_s + r_E^2 Q_\Omega^* \dot{\psi}_s = 0$$

where $I_E^* = I_E/NI_b$ and $Q_\Omega^* = Q_\Omega/NI_b\Omega$. For the windmilling case, I_E^* and Q_Ω^* are set to zero. For constant rotor speed, the ψ_s degree of freedom and equation are dropped. This model may also treat the engine-out case, for which there is no engine damping, by setting $Q_\Omega^* = 0$.

The engine damping may be related to the engine trim operating condition by

$$Q_\Omega = \frac{\partial Q_E}{\partial \Omega_E} \cong \kappa \frac{Q_{E_o}}{\Omega_{E_o}} = \kappa \frac{P_{rotor}}{r_E^2 \Omega_{rotor}^2}$$

where κ is a constant depending on the engine type. In coefficient form, then,

$$r_E^2 Q_\Omega^* = \kappa\gamma \frac{C_Q}{\sigma a}$$

where C_Q is the trim rotor torque or power coefficient. This expression is applicable to a wide variety of engines (refs. 8 to 10). The constant takes the value $\kappa \cong 1$ for a turboshaft engine (refs. 8 and 9) or for a series d.c. electric motor (ref. 10). It takes the value $\kappa \cong 1/(1 - \eta)$ for an induction electric motor or an armature-controlled shunt d.c. motor (ref. 10; η is the

motor efficiency). For a field-controlled shunt d.c. motor, the only damping is mechanical or the damping of the load, so $\kappa \cong 0$ (ref. 10). For a synchronous electric motor, there is a spring on the rotational speed due to the motor, so the above model is not applicable (ref. 10). Generally, the inertia of the engine or motor is more a factor in the dynamics than the damping.

A rotor speed governor may be included in the model. For example, integral plus proportional feedback of the rotor speed perturbation to collective pitch (neglecting the governor dynamics) gives the control equation:

$$\Delta\theta_o^{con} = K_I\psi_s + K_P\dot{\psi}_s$$

Note that the integral feedback ($K_I \neq 0$) adds a spring term to the rotor speed dynamics. A governor would be unusual for a wind-tunnel model unless an actual helicopter was being tested (in which case, a throttle governor would be more likely). Moreover, the governor has little effect on the rotor dynamics generally, because it is basically a very-low-frequency feedback system. The rotor speed governor has a more important role in helicopter flight dynamics. Thus a more detailed model is given in part II (section 9) for the governor, as well as for the engine and transmission dynamics.

2.5 Inflow Dynamics

The aerodynamic forces on the rotor result in wake-induced inflow velocity at the disk, for both the trim and transient loadings. The wake-induced velocity perturbations can be a significant factor in the rotor aeroelastic behavior; an extreme case is the influence of the shed wake on rotor blade flutter (ref. 11). Therefore, the rotor inflow dynamics should be incorporated into the aeroelastic analysis. However, the relationship between the inflow perturbations and the transient loading is likely more complex even than for the steady problem (nonuniform wake-induced inflow calculation), and models for the perturbation inflow dynamics are still under development. In the present analysis, an elementary representation of the inflow dynamics is used. The basic assumption is that the rotor forces vary slowly enough (compared to the wake response) that the classical actuator disk results are applicable to the perturbation as well as the trim inflow velocities.

A contribution to the velocity normal to the rotor disk of the following form is considered:

$$\delta u_P = \lambda + \lambda_x r \cos\psi_m + \lambda_y r \sin\psi_m$$

Here the perturbation inflow component λ is uniform over the rotor disk, while the inflow due to λ_x and λ_y varies linearly over the disk. The inflow dynamics model must relate these inflow components to the transient aerodynamic forces on the rotor, specifically to the thrust C_T, pitch moment C_{M_y}, and roll moment C_{M_x}.

2.5.1 Moment-induced velocity perturbations- For hover, the perturbation inflow $\delta v(r,\psi)$ at a point on the rotor disk may be related to the perturbation of the local disk loading dT/dA by

$$\delta v = \frac{dT/dA}{2\rho v_o}$$

where v_o is here the trim value of the induced velocity. This result can be derived either by momentum theory for the disk element dA (cf. $v_o = T/2\rho A v_o$ for steady state) or by vortex theory (ref. 12). It is applicable only for harmonic changes of the blade loading, however, that is, variations occurring at a frequency $\omega/\Omega = n/\text{rev}$ in the rotating frame, where n is a nonzero integer.

Assuming a linear variation of the loading over the disk, the pitch and roll moments give

$$\frac{dT}{dA} = -4\,\frac{\delta M_y}{RA}\,r\cos\psi + 4\,\frac{\delta M_x}{RA}\,r\sin\psi$$

It follows that δv also has a linear variation. Furthermore, the moments involve harmonic (1/rev) loading, so the above result is applicable, and it gives in coefficient form:

$$\delta\lambda = -2\,\frac{\delta C_{M_y}}{\lambda_o}\,r\cos\psi + 2\,\frac{\delta C_{M_x}}{\lambda_o}\,r\sin\psi$$

where λ_o is the trim inflow ratio (see section 2.3.3). This result can be extended to forward flight following the usual approach of momentum theory. The mass flow through the differential disk area dA is determined by the resultant velocity through the disk, so generally $\dot{m} = \rho(V^2 + v_o^2)^{1/2}\,dA$. Then $dT = 2\dot{m}\,\delta v$ gives

$$\delta v = \frac{dT/dA}{2\rho\sqrt{V^2 + v_o^2}}$$

Thus the inflow perturbation becomes

$$\delta\lambda = -\frac{2\delta C_{M_y}}{\sqrt{\mu^2 + \lambda_o^2}}\,r\cos\psi + \frac{2\delta C_{M_x}}{\sqrt{\mu^2 + \lambda_o^2}}\,r\sin\psi$$

For speeds above transition (μ above 0.1 or 0.15), this is approximately

$$\delta\lambda = -\frac{2\delta C_{M_y}}{\mu}\,r\cos\psi + \frac{2\delta C_{M_x}}{\mu}\,r\sin\psi$$

which may also be obtained directly from the differential form of the induced velocity in forward flight ($\lambda_i \cong C_T/2\mu$).

2.5.2 Thrust-induced velocity perturbation- Now consider the inflow changes due to rotor thrust transients. The above relation between δv and dT/dA is not applicable in this case. That relationship is based on low-frequency variations of a harmonic blade loading (ref. 12). The thrust changes correspond to low-frequency variations of the mean blade loading, and thus a different approach is required.

For thrust perturbations, it is possible to simply consider a perturbation form of the hover momentum theory result for the trim inflow, $\lambda_o = (C_T/2)^{1/2}$. For low-frequency thrust changes then,

$$\delta\lambda = \frac{\partial\lambda}{\partial C_T}\,\delta C_T = \frac{\delta C_T}{4\lambda_o}$$

Note that the harmonic loading result would give an inflow change twice as large, $\delta\lambda = \delta C_T/2\lambda_o$. The difference is due to the rotor shed wake. For harmonic loading (such as 1/rev variations due to the moments), there is both shed and trailed vorticity in the wake, with half the inflow perturbation coming from the shed wake and half from the trailed wake. The rotor thrust produces trailed wake vorticity only (i.e., tip vortices), and hence half the wake influence as the rotor hub moments.

The extension to forward flight is based on the momentum theory result for the trim inflow:

$$\lambda_o = \mu \tan \alpha_{HP} + \frac{C_T}{2\sqrt{\mu^2 + \lambda_o^2}}$$

Then

$$\delta\lambda = \frac{\partial\lambda}{\partial C_T}\,\delta C_T = \frac{\delta C_T}{2\sqrt{\mu^2 + \lambda_o^2} + C_T\lambda_o/(\mu^2 + \lambda_o^2)}$$

$$\cong \frac{\delta C_T}{2\left(\lambda_o + \sqrt{\mu^2 + \lambda_o^2}\right)}$$

(The last approximation is valid for small inflow.) In summary then, the result obtained for the inflow perturbation due to the unsteady thrust and moment changes is

$$\delta\lambda = \frac{\delta C_T}{2\left(\lambda_o + \sqrt{\mu^2 + \lambda_o^2}\right)} - \frac{2\delta C_{M_y}}{\sqrt{\mu^2 + \lambda_o^2}}\, r \cos\psi + \frac{2\delta C_{M_x}}{\sqrt{\mu^2 + \lambda_o^2}}\, r \sin\psi$$

2.5.3 Lift deficiency function- Wake effects in unsteady aerodynamic theory are often represented by a lift deficiency function. Consider the lift deficiency function implied by the above results. The aerodynamic pitch and roll moments on the disk may be written:

$$\begin{pmatrix} \dfrac{-2C_{M_y}}{\sigma a} \\ \\ \dfrac{2C_{M_x}}{\sigma a} \end{pmatrix} = \begin{pmatrix} \dfrac{-2C_{M_y}}{\sigma a} \\ \\ \dfrac{2C_{M_x}}{\sigma a} \end{pmatrix}_{QS} - \frac{1}{8}\begin{pmatrix} \lambda_x \\ \lambda_y \end{pmatrix}$$

where QS means the quasistatic loading, that is, all moment terms except those due to the wake. The induced velocity change due to the hub moments is given above as

$$\begin{pmatrix} \lambda_x \\ \lambda_y \end{pmatrix} = \frac{2}{\sqrt{\mu^2 + \lambda_o^2}} \begin{pmatrix} -C_{M_y} \\ C_{M_x} \end{pmatrix}$$

Substituting for the inflow changes produces

$$\begin{pmatrix} \dfrac{-2C_{M_y}}{\sigma a} \\ \\ \dfrac{2C_{M_x}}{\sigma a} \end{pmatrix} = C \begin{pmatrix} \dfrac{-2C_{M_y}}{\sigma a} \\ \\ \dfrac{2C_{M_x}}{\sigma a} \end{pmatrix}_{QS}$$

where the lift deficiency function C is

$$C = \frac{1}{1 + \dfrac{\sigma a}{8\sqrt{\mu^2 + \lambda_o^2}}}$$

Thus all rotor aerodynamic hub moments are reduced by the factor C due to the rotor wake influence, which can significantly affect the dynamic behavior. For forward flight, the lift deficiency function is

$$C = \frac{1}{1 + (\sigma a/8\mu)}$$

and, for hover,

$$C = \frac{1}{1 + (\sigma a/8\lambda_o)}$$

The hover result is, in fact, the same as the low reduced frequency, harmonic loading limit of Loewy's lift deficiency function (see refs. 11 and 12). Miller shows that it is a good approximation to the real part of Loewy's function to at least a reduced frequency of 0.5, although it neglects the phase shift entirely, of course (ref. 12).

Similarly, the aerodynamic thrust changes can be written:

$$\frac{C_T}{\sigma a} = \left(\frac{C_T}{\sigma a}\right)_{QS} - \frac{1}{4}\lambda$$

and the inflow perturbation is

$$\lambda = \frac{C_T}{2\left(\lambda_o + \sqrt{\mu^2 + \lambda_o^2}\right)}$$

Hence

$$\frac{C_T}{\sigma a} = C\left(\frac{C_T}{\sigma a}\right)_{QS}$$

with the lift deficiency function here:

$$C = \frac{1}{1 + \dfrac{\sigma a}{8\left(\lambda_o + \sqrt{\mu^2 + \lambda_o^2}\right)}}$$

For forward flight, this gives the same function as for the moments, while for hover the thrust changes give

$$C = \frac{1}{1 + \dfrac{\sigma a}{16\lambda_o}}$$

Thus the wake effects reduce the aerodynamic thrust forces by the factor C; the reduction in hover is not as large as for the moments, however, because of the shed wake effects for moments.

Typical values of the lift deficiency function from the above expressions are $C \cong 0.8$ for forward flight; $C \cong 0.7$ for thrust changes in hover; and $C \cong 0.5$ for moment changes in hover. In practice, it is more convenient to incorporate the inflow influence in the aeroelastic analysis using a differential equation model rather than a lift deficiency function. The lift deficiency function is useful, however, in estimating the magnitude of the wake effects.

2.5.4 Inflow due to velocity perturbations- Perturbations of the rotor velocity will also produce a wake-induced velocity change because of the change of the mass flow through the disk. Consider again the momentum theory result for the trim induced velocity:

$$\lambda_i = \frac{C_T}{2\sqrt{\mu^2 + (\mu_z + \lambda_i)^2}}$$

Then, for low-frequency changes of the rotor inplane and normal velocity components (μ and μ_z), the induced velocity perturbation is

$$\delta\lambda = -\frac{C_T(\mu\delta\mu + \lambda_o\delta\mu_z)}{2(\mu^2 + \lambda_o{}^2)^{3/2} + C_T\lambda_o}$$

For hover, this reduces to

$$\delta\lambda = -\frac{1}{2}\,\delta\mu_z$$

and, for forward flight,

$$\delta\lambda = -\frac{C_T}{2\mu^2}\,\delta\mu - \frac{C_T\lambda}{2\mu^3}\,\delta\mu_z$$

Including the thrust term, the total perturbation of the uniform induced velocity component is then

$$\delta\lambda = \frac{\delta C_T - \dfrac{C_T}{(\mu^2 + \lambda_o{}^2)}(\mu\delta\mu + \lambda_o\delta\mu_z)}{2\left(\lambda_o + \sqrt{\mu^2 + \lambda_o{}^2}\right)}$$

The simplest means of incorporating the rotor velocity perturbation terms in the analysis is to treat them as additional terms in the thrust perturbation. To complete this expression, it is necessary to identify the velocity perturbations. Since the velocity components are in the shaft axes, the contributions of the shaft motion and aerodynamic gusts are: $\delta\mu_x = -\dot{x}_h + u_G$, $\delta\mu_y = \dot{y}_h + v_G$, and $\delta\mu_z = \dot{z}_h - w_G$. The shaft angular motion gives no net induced velocity change because the mass flow through the rotor disk depends only on the magnitude of the resultant velocity.

2.5.5 Inflow dynamics model- Considering an inflow perturbation consisting of uniform and linear (1/rev) components,

$$\delta\lambda = \lambda + \lambda_x r\cos\psi + \lambda_y r\sin\psi$$

the analysis above has related these terms to the perturbation aerodynamic thrust and hub moments on the rotor as:

$$\begin{pmatrix} \lambda \\ \lambda_x \\ \lambda_y \end{pmatrix} = \begin{bmatrix} \dfrac{1}{2\left(\lambda_o + \sqrt{\mu^2 + \lambda_o^2}\right)} & 0 & 0 \\ 0 & \dfrac{2}{\sqrt{\mu^2 + \lambda_o^2}} & 0 \\ 0 & 0 & \dfrac{2}{\sqrt{\mu^2 + \lambda_o^2}} \end{bmatrix} \begin{pmatrix} C_T \\ -C_{M_y} \\ C_{M_x} \end{pmatrix}$$

This relationship might be generalized to

$$\vec{\lambda} = \frac{\partial\lambda}{\partial L}\vec{L}$$

where $\partial\lambda/\partial L$ may be a full nine-element matrix. Here we shall consider only the diagonal terms obtained from momentum and vortex theory. As a further generalization, a time lag in the inflow response to loading changes can be included by introducing a first-order time lag term:

$$\tau\dot{\vec{\lambda}} + \vec{\lambda} = \frac{\partial\lambda}{\partial L}\vec{L}$$

Following reference 12, let $\tau = \kappa(\partial\lambda/\partial L)$, where κ is a diagonal matrix:

$$\kappa = \begin{bmatrix} \kappa_o & 0 & 0 \\ 0 & \kappa_c & 0 \\ 0 & 0 & \kappa_s \end{bmatrix}$$

The values $\kappa_o = 0.85$ and $\kappa_c = \kappa_s = 0.11$ are from reference 13. References 13 and 14 show that these values for the time lag correlate fairly well with experiment, and also that the lag does not, in fact, have a very important role in the dynamics.

In summary then, the inflow dynamics model consists of a set of first-order, linear, differential equations for the inflow variables λ, λ_x, and λ_y:

$$\gamma \frac{\kappa_o}{\sigma a} \dot{\lambda} + \frac{2\gamma}{\sigma a}\left(\frac{\lambda_o}{\kappa_h^2} + \sqrt{\frac{\mu^2}{\kappa_f^2} + \frac{\lambda_o^2}{\kappa_h^4}}\right)\lambda = \left(\gamma \frac{C_T}{\sigma a}\right)_{aero}$$

$$\gamma \frac{2\kappa_c}{\sigma a} \dot{\lambda}_x + \frac{\gamma}{\sigma a}\sqrt{\frac{\mu^2}{\kappa_f^2} + \frac{\lambda_o^2}{\kappa_h^4}}\,\lambda_x = -\left(\gamma \frac{2C_{M_y}}{\sigma a}\right)_{aero}$$

$$\gamma \frac{2\kappa_s}{\sigma a} \dot{\lambda}_y + \frac{\gamma}{\sigma a}\sqrt{\frac{\mu^2}{\kappa_f^2} + \frac{\lambda_o^2}{\kappa_h^4}}\,\lambda_y = \left(\gamma \frac{2C_{M_x}}{\sigma a}\right)_{aero}$$

Expressions for the aerodynamic thrust and moment to complete these equations may be obtained above. It is also necessary to include the aerodynamic forces due to the inflow perturbations in the equations of motion for the rotor degrees of freedom. This is an elementary extension of the results of section 2.3, for, by comparing terms in δup, it is seen that λ corresponds to $\dot{z}_h$, λ_x to $-\dot{\alpha}_y$, and λ_y to $\dot{\alpha}_x$. Thus, generally, three degrees of freedom and equations have been added to the system that describes the rotor dynamics.

The time lag is not usually an important factor, so the quasistatic model for the inflow dynamics is generally sufficient. Dropping the time lag terms, the equations for λ, λ_x, and λ_y reduce to linear algebraic equations. Thus, in the quasistatic case, the inflow perturbations do not increase the order of the system. The wake influence reduces to an algebraic substitution relation, which, if incorporated analytically, would lead to lift deficiency functions as derived previously (with large-order systems, it is more practical to accomplish the substitution numerically).

An elementary model has been presented for the rotor inflow dynamics. Such a model has shown good correlation with experiment (refs. 13 and 14), and it gives the correct low-frequency limit for the lift deficiency function (cf. refs. 11 and 12). A more accurate model will probably be necessary for some applications, and a more complex model might be constructed, but further research in this subject is required before a model becomes available which is uniformly more valid than that presented here.

2.6 Rotor Equations of Motion

2.6.1 Inertia coefficients- At this point, the linear differential equations of motion for the rotor model are constructed. The equations of motion are in the nonrotating frame, that is, the Fourier coordinate transformation has been applied to the bending and torsion degrees of freedom of the blade. For now, only a three-bladed rotor is considered (N = 3); the equations are extended to an arbitrary number of blades in section 4. Matrix notation is used for the equations. The coefficient matrices are constructed from the results of the previous sections (primarily, sections 2.2 and 2.3). The vectors of the rotor degrees of freedom (x_R), shaft motion (α), rotor blade pitch

input (v_R), aerodynamic gust input (g_s, in shaft axes), and the hub forces and moments (F) are defined as:

$$x_R = \begin{bmatrix} \beta_o^{(k)} \\ \beta_{1C}^{(k)} \\ \beta_{1S}^{(k)} \\ \theta_o^{(k)} \\ \theta_{1C}^{(k)} \\ \theta_{1S}^{(k)} \\ \beta_{GC} \\ \beta_{GS} \\ \psi_s \\ \lambda \\ \lambda_x \\ \lambda_y \end{bmatrix}, \quad v_R = \begin{bmatrix} \theta_o^{con} \\ \theta_{1C}^{con} \\ \theta_{1S}^{con} \end{bmatrix}, \quad g_S = \begin{bmatrix} u_G \\ v_G \\ \omega_G \end{bmatrix}$$

$$F = \begin{bmatrix} \gamma \dfrac{C_T}{\sigma a} \\ \gamma \dfrac{2C_H}{\sigma a} \\ -\gamma \dfrac{2C_Y}{\sigma a} \\ \gamma \dfrac{C_Q}{\sigma a} \\ \gamma \dfrac{2C_{M_y}}{\sigma a} \\ -\gamma \dfrac{2C_{M_x}}{\sigma a} \end{bmatrix}, \quad \alpha = \begin{bmatrix} x_h \\ y_h \\ z_h \\ \alpha_x \\ \alpha_y \\ \alpha_z \end{bmatrix}$$

Note that, in the rotor degrees of freedom x_R, the notation $\beta^{(k)}$ and $\theta^{(k)}$ is intended to cover as many bending and torsion modes as the analysis requires.

The equations of motion for the rotor, and the hub reactions take the form:

$$A_2\ddot{x}_R + A_1\dot{x}_R + A_0x_R + \tilde{A}_2\ddot{\alpha} + \tilde{A}_1\dot{\alpha} = Bv_R + M_{aero}$$

$$F = C_2\ddot{x}_R + C_1\dot{x}_R + C_0x_R + \tilde{C}_2\ddot{\alpha} + \tilde{C}_1\dot{\alpha} + F_{aero}$$

Here only the structural and inertial terms are included in the coefficient matrices; M_{aero} and F_{aero} are the aerodynamic forcing terms. (These inertial matrices are defined in appendix B1.)

2.6.2 Aerodynamic coefficients — axial flow- The aerodynamic terms F_{aero} and M_{aero} of the rotor equations of motion and the hub reactions are required to complete the differential equations of the rotor model. They are obtained by summing over all N blades of the blade aerodynamic forces in the rotating frame (section 2.3) and introducing the Fourier coordinate transformation for the blade bending and torsion degrees of freedom as required.

The case of a rotor operating in axial flow ($\mu = 0$) is considered first. In axial flow, the aerodynamic coefficients for the blade forces in the rotating frame are constants, independent of the blade azimuth angle ψ_m. The coefficients are also then entirely independent of the blade index (m); hence the summation over the N blades operates only on the system degrees of freedom, not on the aerodynamic coefficients themselves (which factor out of the summation). The result for the required aerodynamic forces is

$$-M_{aero} = A_1\dot{x}_R + A_0x_R + \tilde{A}_1\dot{\alpha} + \tilde{A}_0\alpha - B_Gg_s$$

$$F_{aero} = C_1\dot{x}_R + C_0x_R + \tilde{C}_1\dot{\alpha} + \tilde{C}_0\alpha + D_Gg_s$$

The coefficient matrices are constant for axial flow (see appendix B2).

2.6.3 Aerodynamic coefficients — nonaxial flow- Finally, the aerodynamic terms for the rotor operating in nonaxial flow, $\mu > 0$, are considered. In this case, the aerodynamic coefficients of the rotating blade forces are periodic functions of ψ_m because of the periodically varying aerodynamics of the edgewise moving rotor. It follows that the rotor in nonaxial flight is described by a system of differential equations with periodic coefficients.

It is possible to express the aerodynamic coefficients of the rotating blade forces as Fourier series, and then to obtain the coefficients of the nonrotating equations in terms of these harmonics. The result is rather complicated, however, and, in the present analysis, it would even be necessary to numerically evaluate the harmonics of the Fourier series. The simplest approach for numerical work with large-order systems is to leave the coefficients of the nonrotating equations in terms of the summation over the N blades of the rotor. The summation is easily performed numerically, and it is found that this form is also appropriate for a constant coefficient approximation to the system.

The required aerodynamic forces again take the form:

$$-M_{aero} = A_1\dot{x}_R + A_0 x_R + \tilde{A}_1\dot{\alpha} + \tilde{A}_0\alpha - B_G g_s$$

$$F_{aero} = C_1\dot{x}_R + C_0 x_R + \tilde{C}_1\dot{\alpha} + \tilde{C}_0\alpha + D_G g_s$$

For nonaxial flow, the coefficient matrices are periodic functions of the blade azimuth angle $\psi_m = \psi + m\Delta\psi$ ($\Delta\psi = 2\pi/N$). For a three-bladed rotor considered here, the period of the equations in the nonrotating frame is $\Delta\psi = (2/3)\pi$ (120°). (The coefficient matrices are given in appendix B3.)

2.7 Constant Coefficient Approximation

The rotor dynamics in nonaxial flow are described by a set of linear differential equations with periodic coefficients. A constant coefficient approximation for nonaxial flow is desirable (if it is demonstrated to be accurate enough) because the calculation required to analyze the dynamic behavior is reduced considerably compared to that for the periodic coefficient equations, and because the powerful techniques for analyzing time-invariant linear differential equations are then applicable. However, such a model is only an approximation to the correct aeroelastic behavior. The accuracy of the approximation must be determined by comparison with the correct periodic coefficient solutions. The constant coefficient approximation derived here uses the mean values of the periodic coefficients of the differential equations in the nonrotating frame.

To find the mean value of the coefficients, the operator

$$\frac{1}{2\pi}\int_0^{2\pi} (\ldots)\,d\psi$$

is applied to the periodic aerodynamic coefficients (given in section 2.6.3 and appendix B3), resulting in terms of the form:

$$\frac{1}{2\pi}\int_0^{2\pi} \frac{1}{N}\sum_m \begin{pmatrix} 1 \\ \cos\psi_m \\ \sin\psi_m \\ 2\cos^2\psi_m \\ 2\sin^2\psi_m \\ 2\sin\psi_m\cos\psi_m \end{pmatrix} M(\psi_m)\,d\psi = \frac{1}{N}\sum_m \frac{1}{2\pi}\int_0^{2\pi} \begin{pmatrix} 1 \\ \cos\psi_m \\ \sin\psi_m \\ 2\cos^2\psi_m \\ 2\sin^2\psi_m \\ 2\sin\psi_m\cos\psi_m \end{pmatrix} M(\psi_m)\,d\psi_m = \begin{pmatrix} M^\circ \\ \frac{1}{2}M^{1C} \\ \frac{1}{2}M^{1S} \\ M^\circ + \frac{1}{2}M^{2C} \\ M^\circ - \frac{1}{2}M^{2C} \\ \frac{1}{2}M^{2S} \end{pmatrix}$$

Here M^{nc} and M^{ns} are the harmonics of a Fourier series representation of the rotating blade aerodynamic coefficient M:

$$M(\psi_m) = M^\circ + \sum_{n=1}^{\infty} M^{nc} \cos n\psi_m + M^{ns} \sin n\psi_m$$

In the present case, these harmonics must be evaluated numerically. The aerodynamic coefficient M is calculated at J points, equally spaced around the azimuth. Then the harmonics are calculated using the Fourier interpolation formulas:

$$M^\circ = \frac{1}{J} \sum_j M(\psi_j)$$

$$M^{nc} = \frac{2}{J} \sum_j M(\psi_j) \cos n\psi_j$$

$$M^{ns} = \frac{2}{J} \sum_j M(\psi_j) \sin n\psi_j$$

where $\psi_j = j\Delta\psi = j(2\pi/J)$ $(j = 1, \ldots, J)$. The number of harmonics required is $n = N-1$ for N odd and $n = N-2$ for N even (N is the number of blades). Good accuracy from the Fourier interpolation requires at least that $J = 6n$. Using these Fourier interpolation expressions, the required harmonics are

$$\begin{pmatrix} M^\circ \\ \frac{1}{2} M^{1C} \\ \frac{1}{2} M^{1S} \\ M^\circ + \frac{1}{2} M^{2C} \\ M^\circ - \frac{1}{2} M^{2C} \\ \frac{1}{2} M^{2S} \end{pmatrix} = \frac{1}{J} \sum_j \begin{pmatrix} 1 \\ \cos \psi_j \\ \sin \psi_j \\ 2 \cos^2 \psi_j \\ 2 \sin^2 \psi_j \\ 2 \sin \psi_j \cos \psi_j \end{pmatrix} M(\psi_j)$$

It follows then that the constant coefficient approximation is obtained from the periodic coefficient expressions by the simple transformation:

$$\frac{1}{N} \sum_{m=1}^{N} (\ldots)\, M(\psi_m) \Rightarrow \frac{1}{J} \sum_{j=1}^{J} (\ldots)\, M(\psi_j)$$

The summation over N blades ($m = 1, \ldots, N$; $\Delta\psi = 2\pi/N$) for a periodic coefficient is replaced by a summation over the rotor azimuth ($j = 1, \ldots, J$; $\Delta\psi = 2\pi/J$) for the constant coefficient approximation. This is quite convenient since the same procedure may be used to evaluate the coefficients for the two cases, with simply a change in the azimuth increment. The periodic coefficients must be evaluated throughout the period of $\psi = 0$ to $2\pi/N$, of course; the constant coefficient approximation (mean values only) is evaluated only once.

With the substitution $(1/N) \sum_m \rightarrow (1/J) \sum_j$, the results given in appendix B3 for the periodic coefficient matrices are directly applicable to the constant coefficient approximation as well.

3. ADDITIONAL DETAILS OF ROTOR MODEL

3.1 Rotor Orientation

The rotor orientation is defined by a rotation matrix between the shaft axes and a tunnel axis system:

$$\begin{pmatrix} \vec{i}_S \\ \vec{j}_S \\ \vec{k}_S \end{pmatrix} = R_{ST} \begin{pmatrix} \vec{i}_T \\ \vec{j}_T \\ \vec{k}_T \end{pmatrix}$$

The wind-tunnel axis system used has the x axis directed downstream, the z axis positive upward, and the y axis positive to the right (looking upstream). The wind-tunnel velocity is then $V\vec{i}_T$ and the components of the velocity in the shaft axes are

$$\begin{pmatrix} \mu_x \\ -\mu_y \\ -\mu_z \end{pmatrix} = R_{ST} \begin{pmatrix} V \\ 0 \\ 0 \end{pmatrix}$$

The hub plane angle of attack and yaw angles may be obtained from the following expressions:

$$\alpha_{HP} = \tan^{-1} \mu_z \Big/ \sqrt{\mu_x^2 + \mu_y^2}$$

$$\psi_{HP} = \tan^{-1} \mu_y/\mu_x$$

As examples, we shall consider a helicopter, a propeller test rig, and a tilting proprotor aircraft in a wind tunnel.

3.1.1 Helicopter- For a helicopter rotor in a wind tunnel with a turntable, the shaft axes orientation is given by first yaw to the right by ψ_T, then pitch aft by θ_T. Thus the rotation matrix is

$$R_{ST} = \begin{bmatrix} C_\theta C_\psi & -C_\theta S_\psi & -S_\theta \\ S_\psi & C_\psi & 0 \\ S_\theta C_\psi & -S_\theta S_\psi & C_\theta \end{bmatrix}$$

3.1.2 Propeller test rig- Consider a propeller test rig that may be yawed by ψ_T (positive to the right), with axial flow for $\psi_T = 0$. Then,

$$R_{ST} = \begin{bmatrix} -S_\psi & -C_\psi & 0 \\ 0 & 0 & 1 \\ -C_\psi & S_\psi & 0 \end{bmatrix}$$

3.1.3 Tilting proprotor aircraft- The nacelle and rotor of a tilting proprotor aircraft can be tilted by an angle α_P, where $\alpha_P = 0$ for axial flow (airplane configuration) and $\alpha_P = 90°$ for edgewise flow (helicopter configuration). It is assumed that the nacelle has a cant angle ϕ_R (positive outward in helicopter mode, zero for airplane mode), and that the aircraft has a pitch angle θ_T (positive nose-up). The resulting rotation matrix is

$$R_{ST} = \begin{bmatrix} C_\phi S_\alpha C_\theta + C_\alpha S_\theta & -S_\phi S_\alpha & -C_\phi S_\alpha S_\theta + C_\alpha C_\theta \\ C_\phi S_\phi (1 - C_\alpha) C_\theta + S_\phi S_\alpha S_\theta & C_\phi{}^2 + S_\phi{}^2 C_\alpha & -C_\phi S_\phi (1 - C_\alpha) S_\theta + S_\phi S_\alpha C_\theta \\ -(C_\phi{}^2 C_\alpha + S_\phi{}^2) C_\theta + C_\phi S_\alpha S_\theta & -C_\phi S_\phi (1 - C_\alpha) & (C_\phi{}^2 C_\alpha + S_\phi{}^2) S_\theta + C_\phi S_\alpha C_\theta \end{bmatrix}$$

3.1.4 Gust orientation- The aerodynamic gust components are defined with respect to the tunnel axes (wind axes) for the analysis of the rotor and wind-tunnel support dynamics. The vector of gust velocities seen by the rotor is then

$$g = \begin{pmatrix} u_G \\ v_G \\ w_G \end{pmatrix}$$

where u_G is positive downstream, v_G positive from the right, and w_G positive upward. The rotor aerodynamic forces were derived considering gust components in the shaft axes, g_s. The substitution $g_s = R_{ST} g$ into the equations of motion then transforms the gust components to the tunnel axes.

3.2 Rotor Trim

There are two direct requirements in the dynamics analysis for the trim solution for the rotor blade motion and rotor performance: first, the trim bending deflection $(x_o\vec{i} + z_o\vec{k})$ is required for the coefficients; second, the evaluation of the aerodynamic coefficients requires the lift and drag loading of the rotor blade. The result of this role of the trim solution in the analysis is that the aeroelastic behavior depends generally on the operating state of the rotor. The evaluation of the coefficients of the equations of motion must therefore be preceded by a preliminary calculation of the rotor trim. The trim solution for the blade motion is periodic in the rotating frame for the general case of nonaxial flow; for the axial flow ($\mu = 0$), the blade motion is steady in the rotating frame. For the trim blade motion in the present analysis, only the bending and gimbal degrees of freedom are considered. It is assumed that there is no unsteady shaft motion, that the rotor speed is constant, and that there is no torsion/pitch motion (except cyclic control and any bending/torsion coupling).

In the trim solution, it is assumed that all blades have the same periodic motion and that the gimbal deflection is constant. The equations of motion are solved by a harmonic analysis method, which solves the rotating equations of motion directly for the harmonics of a Fourier series expansion of the periodic motion. The equations for the blade motion are obtained from the above analysis, for the bending and gimbal degrees of freedom:

$$I^*_{q_k}(\ddot{q}_k + g_s\nu_k\dot{q}_k + \nu_k{}^2 q_k) + 2\sum I^*_{q_k\dot{q}_i}\dot{q}_i = I^*_{q_k o} + \gamma\int_o^1 \vec{\eta}_k \cdot \left(\frac{F_z}{ac}\vec{i}_B - \frac{F_x}{ac}\vec{k}_B\, dr\right)$$

$$I_o{}^*(\nu_G{}^2 - 1)\begin{pmatrix}\beta_{GC}\\ \beta_{GS}\end{pmatrix} = \frac{2}{J}\sum_j \begin{pmatrix}\cos\psi_j\\ \sin\psi_j\end{pmatrix}\gamma\int_o^1 \frac{F_z}{ac}\, dr$$

The inertia coefficients are defined in appendix A1, and the aerodynamic forces are evaluated using the trim velocity components (section 2.3).

After the blade motion calculation converges, the rotor performance is evaluated, including the mean aerodynamic forces and moments the rotor produces at the hub (in particular, the rotor thrust and power). In an outer loop, there can be an iteration on the controls to trim the rotor to some desired operating state. Possible options include adjusting the collective to achieve a target thrust or torque, or adjusting collective and cyclic pitch to achieve a target thrust and flapping or a target lift and propulsive force.

For axial flow ($\mu = 0$), the trim solution is independent of ψ (assuming no cyclic pitch input). The gimbal motion is zero, and the equation for the blade bending modal deflection reduces to

$$I^*_{q_k}\nu_k{}^2 q_k = I^*_{q_k o} + \gamma\int_o^1 \vec{\eta}_k \cdot \left(\frac{F_z}{ac}\vec{i}_B - \frac{F_x}{ac}\vec{k}_B\right)dr$$

So, in this case, only the mean blade bending motion is nonzero, and an iterative solution for the blade motion is not required. Furthermore, of the forces and moments on the rotor hub, only the thrust and torque are nonzero.

3.3 Lateral Velocity

For the development of the aerodynamic analysis of the rotor in section 2.3, it was assumed that the trim velocity of the rotor was in the x-z plane of the shaft axis system. Generally, however, it is also necessary to consider a lateral velocity component, that is, $\mu_y = j_S \cdot \vec{V}$. An alternative would be to rotate the shaft axes until $\vec{j}_S \cdot \vec{V} = 0$, but that would imply a redefinition of the rotor zero azimuth position for every flight state. Such a redefinition of ψ is not desirable since it changes the values of parameters such as control-system phasing, and even the definition of the rotor degrees of freedom such as tip-path-plane tilt. Hence it is preferable to directly incorporate the effects of the lateral velocity in the analysis. The velocity of the air seen by the rotor disk has then three components in the shaft axes: μ_x, positive aft; μ_y, positive from the right; and μ_z, positive downward ($\vec{V}_{air} = \mu_x \vec{i}_S - \mu_y \vec{j}_S - \mu_z \vec{k}_S$).

The incorporation of μ_y into the analysis developed in section 2 is straightforward. The only influence is on the rotor aerodynamics. In the trim induced velocity, μ^2 is replaced by $\mu_x^2 + \mu_y^2$ (section 2.3.3); this substitution is also made in the coefficients of the equations for the inflow perturbations (section 2.5.4). In the trim velocity of the blade (section 2.3.3), the quantity $\mu \cos \psi_m$ is replaced by $\mu_x \cos \psi_m - \mu_y \sin \psi_m$, and the quantity $\mu \sin \psi_m$ by $\mu_x \sin \psi_m + \mu_y \cos \psi_m$; these substitutions are also required in the ζ, β, and q_i aerodynamic derivatives and in the unsteady terms of the torsion equation aerodynamic coefficients (appendix A2). Finally, the quantity $\mu\alpha_y$ is replaced by $\mu_x\alpha_y + \mu_y\alpha_x$ in the perturbation velocity δu_P (section 2.3.3). It follows that lateral velocity μ_y terms are added to the α_x columns (fourth columns) of the aerodynamic matrices $\tilde{A}_0$ and $\tilde{C}_0$ in the equations of motion, in a fashion similar to the μ_x terms in the α_y columns (fifth columns; see appendices B2 and B3).

3.4 Clockwise Rotating Rotor

The equations of motion for the rotor have been developed assuming counterclockwise rotation of the blades as viewed from above. The equations for a clockwise rotating rotor are obtained by implementing a mirror-image transformation consisting of the following sign changes:

(a) Change the signs of the y_h, α_x, and α_z columns of the $\tilde{A}$ and $\tilde{C}$ matrices.

(b) Change the signs of the C_Y, C_Q, and C_{M_x} rows of the C, $\tilde{C}$, and D_G matrices.

(c) Change the sign of the v_G column of the B_G and D_G matrices.

(d) Change the sign of the lateral velocity μ_y.

The degrees of freedom of the rotor remain defined with respect to the actual rotation direction; for example, blade lag motion is still positive opposing the blade rotation, and the lateral tip-path-plane or gimbal tilt β_{1S} is still positive toward the retreating side of the disk. The mirror-image transformation accounts for the reversals of some components of α, F, and g (which are defined in the nonrotating system) relative to the counterclockwise or clockwise rotating rotors.

3.5 Blade Bending and Torsion Modes

3.5.1 Coupled bending modes of a rotating blade- Equilibrium of the elastic, inertial, and centrifugal bending moments on the blade gives the differential equation for the coupled flap/lag bending of the rotating blade (see section 2.2). For free vibration — the homogeneous equation with harmonic motion at the natural frequency ν — we obtain the modal equation for bending of the blade:

$$(EI\vec{\eta}'')'' - \Omega^2\left(\int_r^R \rho m \, d\rho \; \vec{\eta}'\right)' - m\vec{\Omega}\vec{\Omega}\cdot\vec{\eta} - m\nu^2\vec{\eta} = 0$$

Here $\vec{\eta}(r) = z_o\vec{i} - x_o\vec{k}$ is the bending deflection (mode shape), $EI = EI_{zz}\vec{i}\vec{i} + EI_{xx}\vec{k}\vec{k}$ is the bending stiffness dyadic, $\vec{\Omega} = \Omega\vec{k}_B$ is the rotor rotational speed, ν is the natural frequency of the mode, and $K_s = K_F\vec{i}_B\vec{i}_B + K_L\vec{k}_B\vec{k}_B$ is the hinge spring dyadic. The boundary conditions are:

(a) At the tip (r = R): $EI\vec{\eta}'' = (EI\vec{\eta}'')' = 0$.

(b) At the root (r = e): $\vec{\eta} = \vec{\eta}' = 0$ for a cantilever blade; $\vec{\eta} = 0$ and $EI\vec{\eta}'' = K_s\vec{\eta}'$ for an articulated blade.

The root boundary condition is applied at the offset $r = e$ to allow for hinge offset of an articulated rotor or a very stiff hub of a hingeless rotor. The hinge springs are assumed to be oriented in the hub frame here, but could also include a component that rotates with the blade pitch; K_F is the flap spring and K_L, the lag spring constant.

This is an eigenvalue problem, a differential equation in r for the mode shapes $\vec{\eta}$ and the natural frequencies ν. The equation with the appropriate boundary conditions constitutes a proper Sturm-Liouville eigenvalue problem. It follows that the solution exists — a series of modes $\vec{\eta}_i(r)$ and the corresponding natural frequencies ν_i — and that the modes are orthogonal with weight m. Hence, if $i \neq k$, then

$$\int_o^R \vec{\eta}_i \cdot \vec{\eta}_k m \, dr = 0$$

The frequencies satisfy the energy balance relation:

$$\nu^2 = \frac{\vec{\eta}'(e)\, K_s \vec{\eta}'(e) + \int_e^R \left[\vec{\eta}'' EI \vec{\eta}'' + \Omega^2 \int_r^R \rho m \, d\rho \; \eta'^2 - m(\vec{\Omega} \cdot \vec{\eta})^2 \right] dr}{\int_e^R \eta^2 m \, dr}$$

The modal equation is solved by a Galerkin method. The mode shape is expanded as a finite series in the functions $\vec{f}_i(r)$:

$$\vec{\eta} = \Sigma \, c_i \vec{f}_i(r)$$

We require that each $\vec{f}_i$ satisfy the boundary conditions on $\vec{\eta}$, then the sum automatically does. Since a finite series is required for computation, this is an approximate calculation. For best numerical accuracy, the functions $\vec{f}_i$ should then be chosen so that at least the lower-frequency modes can be well represented. Substituting this series in the differential equation and operating with

$$\int_e^1 \vec{f}_k \cdot (\ldots) dr$$

reduces the problem (after integration by parts and an application of the boundary conditions) to a set of algebraic equations for $\vec{c} = [c_i]$:

$$(A - \nu^2 B)\vec{c} = 0$$

The coefficient matrices are

$$A_{ki} = \vec{f}_k'(e) \frac{K_s}{\Omega^2 R^3} \vec{f}_i'(e) + \int_e^1 \left[\vec{f}_k'' \frac{EI}{\Omega^2 R^4} \vec{f}_i'' + \int_r^1 \rho m \, d\rho \; \vec{f}_k \cdot \vec{f}_i - m\vec{f}_k \cdot \vec{k}_B \vec{f}_i \cdot \vec{k}_B \right] dr$$

$$B_{ki} = \int_e^1 m\vec{f}_k \cdot \vec{f}_i \, dr$$

The eigenvalues of the matrix $(B^{-1}A)$ are the natural frequencies ν^2 of the coupled bending vibration of the blade, and the corresponding eigenvectors $\vec{c}$ give the mode shape $\vec{\eta}$. As a final step, the modes are normalized to unity at the tip: $|\vec{\eta}(1)| = 1$.

A convenient set of functions for f_i are the following polynomials (ref. 7):

$$f_n = \frac{(n+2)(n+3)}{6} x^{n+1} - \frac{n(n+3)}{3} x^{n+2} + \frac{n(n+1)}{6} x^{n+3}$$

where $x = (r - e)/(1 - e)$. For a hinged blade, $f_1 = x$ is used. The polynomials satisfy the required boundary conditions but are not orthogonal functions. For the hinge spring term in A_{ki} (articulated blades only), note that $f_n'(e) = 0$, except for the first mode where $f_1'(e) = 1/(1 - e)$.

3.5.2 Articulated blade modes- For an articulated rotor blade, the modal differential equation need not be solved if the higher bending modes are not required. Rigid lag and flap motion about the hinges gives the two lowest frequency modes:

$$\vec{\eta}_{lag} = -\left(\frac{r - e_\ell}{1 - e_\ell}\right)\vec{k}_B$$

$$\vec{\eta}_{flap} = \left(\frac{r - e_f}{1 - e_F}\right)\vec{i}_B$$

Note that separate hinge offsets may be used for flap and lag motion. The natural frequencies are obtained directly from the energy balance relation:

$$\nu^2_{lag} = \frac{e_\ell \int_{e_\ell}^{1} \eta m \, dr + K_L}{(1 - e_\ell) \int_{e_\ell}^{1} \eta^2 m \, dr}$$

$$\nu^2_{flap} = 1 + \frac{e_f \int_{e_f}^{1} \eta m \, dr + K_F}{(1 - e_f) \int_{e_f}^{1} \eta^2 m \, dr}$$

3.5.3 Torsion modes of a nonrotating blade- Equilibrium of the elastic and inertial torsion moments (see section 2.2) gives the modal equation:

$$(GJ\xi')' + I_\theta \omega^2 \xi = 0$$

with the boundary conditions $\xi' = 0$ at the tip ($r = R$), and $\xi = 0$ at the pitch bearing ($r = r_{FA}$). The modes are orthogonal with weight I_θ. Hence, if $i \neq k$, then

$$\int_{r_{FA}}^{R} \xi_i \xi_k I_\theta = 0$$

The frequencies satisfy the relation:

$$\omega^2 = \frac{\int_{r_{FA}}^{R} GJ\xi'^2 \, dr}{\int_{r_{FA}}^{R} I_\theta \xi^2 \, dr}$$

These are nonrotating torsion modes, so the solution is independent of the rotor speed or collective pitch. The equation is solved by a Galerkin method. Writing $\xi = \Sigma c_i f_i(r)$, where the functions f_i satisfy the boundary conditions on ξ, and operating with $\int_{r_{FA}}^{1} f_k(\ldots)dr$ on the differential equation produces a set of algebraic equations for $\vec{c} = [c_i]$:

$$(A - \omega^2 B)\vec{c} = 0$$

The coefficient matrices are

$$A_{ki} = \int_{r_{FA}}^{1} \frac{GJ}{\Omega^2 R^2} f_k' f_i' \, dr$$

$$B_{ki} = \int_{r_{FA}}^{1} I_\theta f_k f_i \, dr$$

The eigenvalues of the matrix $(B^{-1}A)$ give the natural frequencies of the torsion vibration, and the corresponding eigenvectors for $\vec{c}$ give the modes. Finally, the torsion modes are normalized to unit at the tip, $\xi(1) = 1$.

A convenient set of functions to use for f_i is the solution for the torsion modes of a uniform beam:

$$f_n = \sin\left[\left(n - \frac{1}{2}\right)\pi \frac{r - r_{FA}}{1 - r_{FA}}\right]$$

These functions satisfy the boundary conditions and will usually be close to the actual mode shapes.

3.6 Lag Damper

For articulated rotors, the mechanical lag damper has an important role in the dynamics. A lag damping term is added to the blade bending equation of motion (section 2.2):

$$I^*_{q_k}(\ddot{q}_k + g_s\nu_k\dot{q}_k + \nu_k{}^2 q_k) + 2\sum_i I^*_{q_k\dot{q}_i}\dot{q}_i + \sum_i g_{lag}\vec{k}_B\cdot\vec{\eta}'_k(e)\vec{k}_B\cdot\vec{\eta}'_i(e)\dot{q}_i + \ldots$$

$$= \gamma\frac{M_{q_k aero}}{ac} + I^*_{q_k o}$$

where $g_{lag} = C_\zeta/I_b\Omega$ and C_ζ is the lag damping coefficient. The quantity $\vec{k}_B\cdot\eta'_k(e)$ is the slope of the kth bending mode in the lagwise direction, just outboard of the lag hinge. The manner in which the lag damping enters the equation of motion is obtained by a Galerkin or Rayleigh-Ritz analysis. The lag damper results in a bending moment at the lag hinge. Thus it is necessary to evaluate moments at the blade root by integrating along the span, which has, in fact, been our practice.

3.7 Pitch/Bending Coupling

The kinematic pitch/bending coupling K_{P_i} and the pitch/gimbal coupling K_{P_G} have a significant role in the rotor dynamic behavior. The definition of K_{P_i} is the rigid pitch motion due to a unit deflection of the ith bending mode: $K_{P_i} = -\,d\theta/dq_i$. For an articulated rotor, the first "bending" modes are rigid lag and flap motion about the hinges. The pitch/flap coupling is often defined in terms of the delta-three angle: $K_P = \tan\delta_3$. It is possible to simply input the kinematic coupling parameters to the stability calculations if values are available from either measurements or some other analysis. It is also desirable, however, to be able to calculate the coupling from a model of the blade root geometry.

Figure 12 is a schematic of the blade root and control-system geometry considered here, which shows the position of the feather bearing, pitch horn, and pitch link for no bending deflection of the blade. The radial locations of the feather bearing and pitch link are r_{FA} and r_{PH}, respectively; the lengths of the pitch horn and pitch line are x_{PH} and x_{PL}. The orientation of the pitch horn and pitch link are given by the angles $\phi_{PH} + \theta_{75}$ and ϕ_{PL}. Control input produces a vertical motion of the bottom of the pitch link and hence a feathering motion of the blade about the pitch axis. The bending motion of the blade, with either bending flexibility or an actual hinge inboard of the pitch bearing, produces an inplane or out-of-plane deflection of the pitch bearing. With the bottom of the pitch link fixed in space, a pitch change of the blade results. The vertical and inplane displacements of the pitch horn (the end at r_{PH}) due to bending of the blade in the ith mode are

$$\Delta z = q_i\vec{i}_B\cdot[\vec{\eta}_i(r_{FA}) - \vec{\eta}'_i(r_{FA})(r_{FA} - r_{PH})]$$

$$\Delta x = -q_i\vec{k}_B\cdot[\vec{\eta}_i(r_{FA}) - \vec{\eta}'_i(r_{FA})(r_{FA} - r_{PH})]$$

The kinematic pitch/bending coupling is derived from the geometric constraint that the lengths of the pitch horn and pitch link be fixed. The result is

$$K_{P_i} = \frac{(\cos\phi_{PL}\vec{i}_B + \sin\theta_{PL}\vec{k}_B)\cdot[\vec{\eta}_i(r_{FA}) - \vec{\eta}_i(r_{FA})(r_{FA} - r_{PH})]}{-x_{PH}\cos(\phi_{PH} + \theta_{75} + \phi_{PL})}$$

Similarly, for a gimballed rotor, the pitch/gimbal coupling is

$$K_{P_G} = \frac{-(r_{PH}/x_{PH})\cos\phi_{PL}}{\cos(\phi_{PH} + \theta_{75} + \phi_{PL})}$$

$$= \frac{\left(K_{P_G}\right)_{\text{pitch horn horizontal}}}{\cos(\phi_{PH} + \theta_{75} + \phi_{PL})}$$

3.8 Normalization Parameters

It has been the practice here to deal with dimensionless quantities based on the air density, rotor speed, and rotor radius (ρ, Ω, and R). In addition, the equations of motion inertia coefficients, and aerodynamic coefficients have been normalized using the following parameters: I_b, a characteristic moment of inertia of the blade; c_m, the blade mean chord; and a, the blade two-dimensional lift-curve slope. These parameters have no effect on the numerical problem. It is essential, however, to be consistent in the definition of the normalization quantities and the parameters that depend on them. In particular, the blade Lock number and rotor solidity are defined as

$$\gamma = \frac{\rho a c_m R^4}{I_b}$$

$$\sigma = \frac{N c_m}{\pi R}$$

The Lock number may be defined for standard air conditions (ρ_o), and then $\gamma(\rho/\rho_o)$ used in the analysis to account for the actual temperature and altitude at which the aircraft or wind tunnel is operating. It is convenient to use the rotor solidity as the primary parameter and to obtain the mean chord from $c_m/R = \sigma\pi/N$.

4. ARBITRARY NUMBER OF BLADES

4.1 Four or More Blades

In this section, the rotor model is extended to an arbitrary number of blades. The equations derived in section 2 are for a three-bladed rotor. We

begin with a consideration of the case of four or more blades. Each rotating degree of freedom of the blade (i.e., bending or torsion motion) must result in N degrees of freedom for the rotor as a whole. Thus increasing the number of blades adds degrees of freedom and equations of motion to the rotor description. In axial flow, these additional degrees of freedom do not couple with the collective and cyclic (0,1C,1S) degrees of freedom of the rotor. Hence the equations in section 2.6 remain valid for rotors with $N > 3$ also, and we need be concerned here only with the equations of motion for the additional degrees of freedom. For nonaxial flow, however, all rotor degrees of freedom are coupled.

The Fourier coordinate transformation for four or more blades adds the following degrees of freedom to the collective and cyclic variables for $N = 3$:

$$\beta_{2C} = \frac{2}{N} \sum_m q^{(m)} \cos 2\psi_m$$

$$\beta_{2S} = \frac{2}{N} \sum_m q^{(m)} \sin 2\psi_m$$

$$\vdots$$

$$\beta_{nc} = \frac{2}{N} \sum_m q^{(m)} \cos n\psi_m$$

$$\beta_{ns} = \frac{2}{N} \sum_m q^{(m)} \sin n\psi_m$$

$$\beta_{N/2} = \frac{1}{N} \sum_m q^{(m)} (-1)^m$$

So

$$q^{(m)} = \beta_o + \sum_n (\beta_{nc} \cos n\psi_m + \beta_{ns} \sin n\psi_m) + \beta_{N/2}(-1)^m$$

The result for the torsion/pitch modes is similar. The summation over m goes from 1 to N; the summation over n goes from 1 to $(N - 1)/2$ for N odd and to $(N - 2)/2$ for N even. The $\beta_{N/2}$ and $\theta_{N/2}$ degrees of freedom are present only if N is even. Then there are a total of N nonrotating degrees of freedom corresponding to each bending and torsion mode of the blade.

These additional degrees of freedom are not coupled inertially with the shaft or gimbal motion. The bending and torsion equations in the rotating frame are thus reduced to

$$I^*_{q_k}(\ddot{q}_k + g_s\nu_k\dot{q}_k + \nu_k{}^2 q_k) + \sum I^*_{q_k\dot{q}_i}\dot{q}_i - \sum S^*_{q_k\ddot{p}_i}\ddot{p}_i - \sum S^*_{q_k p_i} p_i = \gamma \frac{M_{q_k aero}}{ac}$$

$$I^*_{p_k}(\ddot{p}_k + g_s\omega_k\dot{p}_k + \omega_k{}^2 p_k) + \sum I^*_{p_k\ddot{p}_i}\ddot{p}_i + \sum I^*_{p_k p_i} p_i - \sum S^*_{p_k\ddot{q}_i}\ddot{q}_i$$

$$- \sum S^*_{p_k q_i} q_i = \gamma \frac{M_{p_k aero}}{ac} + I^*_{p_o}\omega_o{}^2\xi_k(r_{FA})\theta_{con}$$

The equations of motion in the nonrotating frame are obtained by application of the following summation operators:

$$\frac{2}{N}\sum_m(\ldots)\cos n\psi_m\ , \quad \frac{2}{N}\sum_m(\ldots)\sin n\psi_m\ , \quad \frac{1}{N}\sum_m(\ldots)(-1)^m$$

and introduction of the Fourier coordinate transformation as required.

The additional equations of motion for the rotor with four or more blades are then:

$$A_2\ddot{x}_R + A_1\dot{x}_R + A_0 x_R = Bv_R + M_{aero}$$

The vectors of the rotor degrees of freedom (x_R) and blade pitch control inputs (v_R) are:

$$x_R = \begin{bmatrix} \beta^{(k)}_{nc} \\ \beta^{(k)}_{ns} \\ \beta^{(k)}_{N/2} \\ \theta^{(k)}_{nc} \\ \theta^{(k)}_{ns} \\ \theta^{(k)}_{N/2} \end{bmatrix}, \quad v_R = \begin{bmatrix} \theta^{con}_{nc} \\ \theta^{con}_{ns} \\ \theta^{con}_{N/2} \end{bmatrix}$$

(The matrices of the inertia coefficients are given in appendix B4.)

To complete the equations of motion, the aerodynamic terms must be evaluated. The aerodynamic forces in axial flow still do not couple the additional degrees of freedom for $N \geq 4$ with the shaft or gimbal motion. Thus the aerodynamic forces for the bending and torsion modes in the rotating frame reduce to

$$M_{q_k aero} = \sum M_{q_k \dot{q}_i} \dot{q}_i + \sum M_{q_k q_i} q_i + \sum M_{q_k p_i} p_i$$

$$M_{p_k aero} = \sum M_{p_k \dot{q}_i} \dot{q}_i + \sum M_{p_k q_i} q_i + \sum M_{p_k \dot{p}_i} \dot{p}_i + \sum M_{p_k p_i} p_i$$

Thus the aerodynamic terms for axial flow take the form:

$$-M_{aero} = A_1 \dot{x}_R + A_2 x_R$$

(The matrices of the aerodynamic coefficients are given in appendix B5.)

The aerodynamic forces in nonaxial flow ($\mu > 0$) couple all degrees of freedom of the rotor with each other and with the shaft and gimbal motion. Then, not only are additional degrees of freedom and equations of motion involved if $N > 3$, but the number of blades also influences the equations and the hub reactions given in section 2.6. Rather than directly presenting the aerodynamic matrices for the general case of three or more blades in nonaxial flow, the analysis is extended by means of an observed pattern in the coefficients. In the nonaxial flow equations in appendix B3, note the repeated occurrence of the following submatrices:

$$P = \begin{bmatrix} 1 & C_1 & S_1 \\ 2C_1 & 2C_1^2 & 2C_1S_1 \\ 2S_1 & 2C_1S_1 & 2S_1^2 \end{bmatrix} = \begin{bmatrix} 1 \\ 2C_1 \\ 2S_1 \end{bmatrix} [1 \quad C_1 \quad S_1]$$

$$DP = \begin{bmatrix} 0 & -S_1 & C_1 \\ 0 & -2C_1S_1 & 2C_1^2 \\ 0 & -2S_1^2 & 2C_1S_1 \end{bmatrix} = \begin{bmatrix} 1 \\ 2C_1 \\ 2S_1 \end{bmatrix} [0 \quad -S_1 \quad C_1]$$

(using the notation $S_n = \sin n\psi_m$ and $C_n = \cos n\psi_m$). These matrices are a direct result of the introduction of the Fourier coordinate transformation (columns) and the application of the summation operators to obtain the nonrotating equations (rows). The matrix DP arises from application of the Fourier transformation to the time derivatives ($\dot{q}_i$ or $\dot{p}_i$). In the B_G and $\tilde{A}$ matrices, only some columns of P and DP appear, while in the C matrices only some rows appear. The extension to an arbitrary number of blades ($N \geq 3$) is then, simply,

$$P = \begin{bmatrix} 1 \\ 2C_1 \\ 2S_1 \\ \vdots \\ 2C_n \\ 2S_n \\ (-1)^m \end{bmatrix} [1 \quad C_1 \quad S_1 \quad \ldots \quad C_n \quad S_n \quad (-1)^m]$$

$$DP = \begin{bmatrix} 1 \\ 2C_1 \\ 2S_1 \\ \vdots \\ 2C_n \\ 2S_n \\ (-1)^m \end{bmatrix} [0 \quad -S_1 \quad C_1 \quad \ldots \quad -nS_n \quad nC_n \quad 0]$$

The constant coefficient approximation for the aerodynamic terms in non-axial flow is derived for $N \geq 4$ following section 2.7. It is found that the approximation is obtained from the periodic coefficient result by the transformation:

$$\frac{1}{N} \sum_{m=1}^{N} \begin{bmatrix} 1 \\ C_n \\ S_n \\ C_n C_\ell \\ C_n S_\ell \\ S_n S_\ell \\ (-1)^m \\ C_n(-1)^m \\ S_n(-1)^m \end{bmatrix} M(\psi_m) \rightarrow \frac{1}{J} \sum_{j=1}^{J} \begin{bmatrix} 1 \\ C_n \\ S_n \\ C_n C_\ell \\ C_n S_\ell \\ S_n S_\ell \\ 0 \\ 0 \\ 0 \end{bmatrix} M(\psi_j)$$

So the periodic coefficient results are still applicable to the constant coefficient approximation if the summation over the N blades is replaced by a summation around the rotor azimuth.

4.2 Two-Bladed Rotor

Rotors with three or more blades may be analyzed within the same general framework, but the two-bladed rotor is a special case. The rotor with $N \geq 3$ has axisymmetric inertia and structural properties and hence the nonrotating equations have constant coefficients in axial flow. In contrast, the lack of axisymmetry with a two-bladed rotor leads to periodic coefficient differential equations, even in the inertial terms and in axial flow. Only in special cases (e.g., shaft fixed, or with an isotropic support — analyzed in the rotating frame) are the dynamics of a two-bladed rotor described by constant coefficient equations.

The rotor degrees of freedom in the nonrotating frame are obtained as usual from the Fourier coordinate transformation. For $N = 2$, the bending degrees of freedom are coning and teetering type modes:

$$\beta_0 = \frac{1}{N} \sum_m q^{(m)} = \frac{1}{2} [q^{(2)} + q^{(1)}]$$

$$\beta_1 = \frac{1}{N} \sum_m q^{(m)} (-1)^m = \frac{1}{2} [q^{(2)} - q^{(1)}]$$

The pitch/torsion degrees of freedom θ_0 and θ_1 are similarly defined. The teetering degree of freedom β_T, which corresponds to the gimbal motion of the rotor with three or more blades, is also included for the two-bladed rotor. The teetering motion is defined in the rotating frame; hence (see fig. 9),

$$\beta_G = \beta_T (-1)^m$$

$$\theta_G = 0$$

The special characteristics of the two-bladed rotor dynamics are reflected in the appearance of the teetering-type degrees of freedom (β_1, θ_1, and β_T), which take the place of the cyclic (1C and 1S) motions for $N \geq 3$.

The bending and torsion equations in the rotating frame, derived in section 2, remain valid for $N = 2$. The rotor equations of motion in the nonrotating frame are obtained by operating on the bending and torsion equations with the following summation operators:

$$\frac{1}{N} \sum_m (\ldots) \quad \text{and} \quad \frac{1}{N} \sum_m (\ldots)(-1)^m$$

The equation of motion for the teetering degree of freedom is obtained from equilibrium of moments about the teeter hinge (in the rotating frame):

$$-2M_T + C_T\dot{\beta}_T + K_T\beta_T = 0$$

The teetering moment M_T is given by the root flapwise bending moment:

$$M_T = \frac{1}{N}\sum_m \vec{i}_B \cdot \vec{M}^{(m)}(-1)^m$$

where C_T and K_T are the damper and spring constants about the teeter hinge in the rotating frame. In terms of the natural frequency and damping coefficient, $C_T = 2I_o\Omega C_T^*$ and $K_T = 2I_o\Omega^2(\nu_T^2 - 1)$. The hub forces and moments are obtained by summing the root forces and moments from both blades, as for $N \geq 3$. The equations are normalized and the inertia coefficients named in a manner similar to the $N = 3$ case (section 2.2). Inflow dynamics and the rotor speed dynamics are included as for $N \geq 3$ (sections 2.4 and 2.5).

The vectors of the rotor degrees of freedom (x_R) and the rotor blade pitch input (v_R) are defined as follows for the two-bladed rotor:

$$x_R = \begin{bmatrix} \beta_o^{(k)} \\ \beta_1^{(k)} \\ \theta_0^{(k)} \\ \theta_1^{(k)} \\ \beta_T \\ \psi_s \\ \lambda \\ \lambda_x \\ \lambda_y \end{bmatrix}, \quad v_R = \begin{bmatrix} \theta_0^{con} \\ \theta_1^{con} \end{bmatrix}$$

The vectors of the shaft motion (α) and the hub reactions (F) are defined as in section 2.6. The equations of motion then take the form:

$$A_2\ddot{x}_R + A_1\dot{x}_R + A_0x_R + \tilde{A}_2\ddot{\alpha} + \tilde{A}_1\dot{\alpha} = Bv_R + M_{aero}$$

$$F = C_2\ddot{x}_R + C_1\dot{x}_R + C_0x_R + \tilde{C}_2\ddot{\alpha} + \tilde{C}_1\alpha + F_{aero}$$

(The matrices of the inertia coefficients are given in appendix B6.) Note that there are periodic coefficients in the matrices coupling the rotor and shaft motion ($\tilde{A}$, C, $\tilde{C}$).

The aerodynamic forces M_{aero} and F_{aero} are required to complete the equations. The teetering aerodynamic moment is defined as

$$\frac{M_{T_{aero}}}{ac} = \frac{1}{N} \sum_m \int_0^1 \frac{F_z}{ac} r \, dr (-1)^m$$

The aerodynamic hub forces and moments are defined as for $N \geq 3$. The aerodynamic forces on the bending modes are

$$M_{\beta_0 aero} = \frac{1}{N} \sum_m M_{q_k aero}$$

$$M_{\beta_1 aero} = \frac{1}{N} \sum_m M_{q_k aero} (-1)^m$$

The definitions of the torsion aerodynamic forces $M_{\theta_0 aero}$ and $M_{\theta_1 aero}$ are similar. The aerodynamic forces are then:

$$-M_{aero} = A_1 \dot{x}_R + A_0 x_R + \tilde{A}_1 \dot{\alpha} + \tilde{A}_0 \alpha - B_G g_s$$

$$F_{aero} = C_1 \dot{x}_R + C_0 x_R + \tilde{C}_1 \dot{\alpha} + \tilde{C}_0 \alpha + D_G g_s$$

The vector of aerodynamic gust components (g_s) is defined as in section 2.6. (The matrices of the aerodynamic coefficients are given in appendix B7.)

A constant coefficient approximation for the two-bladed rotor may be obtained in a manner similar to the $N \geq 3$ case. For the aerodynamic forces, as usual the summation over N blades is simply replaced by an average over J points around the azimuth:

$$\frac{1}{N} \sum_m \begin{bmatrix} 1 \\ \cos \psi_m \\ \sin \psi_m \\ (-1)^m \end{bmatrix} M(\psi_m) \Rightarrow \frac{1}{J} \sum_j \begin{bmatrix} 1 \\ \cos \psi_j \\ \sin \psi_j \\ 0 \end{bmatrix} M(\psi_j)$$

Note that all aerodynamic terms involving $(-1)^m$ drop in the constant coefficient approximation. For the inertia terms, the mean values of the periodic coefficients are easily obtained.

The constant coefficient approximation is not as useful — or as accurate — for the two-bladed rotor as for $N \geq 3$. With three or more blades, the

source of the periodic coefficients is nonaxial flow, hence the periodicity is of order μ or smaller. At low advance ratio then, the constant coefficient approximation may be expected to be a good representation of the correct dynamics. The two-bladed rotor has also periodic coefficients due to the inherent lack of axisymmetry of the rotor. This periodicity is large even for axial flow, and neglecting it in the constant coefficient approximation is often a poor representation of the dynamics.

4.3 Single-Bladed Rotor

A single-blade analysis is useful for problems not involving the shaft motion or other excitation from the nonrotating frame. The only rotor blade degrees of freedom involved are the bending and torsion motion. The shaft motion, gimbal motion, and the rotor speed perturbation are dropped from the system. The hub reactions need not be considered. The single-blade analysis is, of course, in the rotating frame. The equations of motion for the bending and torsion modes of the blade are then:

$$I^*_{q_k}(\ddot{q}_k + g_s\nu_k\dot{q}_k + \nu_k{}^2 q_k) + 2\sum I^*_{q_k\dot{q}_i}\dot{q}_i - \sum S^*_{q_k\ddot{p}_i}\ddot{p}_i - \sum S^*_{q_k p_i} p_i$$

$$- \sum \gamma M_{q_k\dot{q}_i}\dot{q}_i - \sum \gamma M_{q_k q_i} q_i - \sum \gamma M_{q_k p_i} p_i = 0$$

$$I^*_{p_k}(\ddot{p}_k + g_s\omega_k\dot{p}_k + \omega_k{}^2 p_k) + \sum I^*_{p_k\ddot{p}_i}\ddot{p}_i + \sum I^*_{p_k p_i} p_i - \sum S^*_{p_k\ddot{q}_i}\ddot{q}_i - \sum S^*_{p_k q_i} q_i$$

$$- \sum \gamma M_{p_k\dot{q}_i}\dot{q}_i - \sum \gamma M_{p_k q_i} q_i - \sum \gamma M_{p_k\dot{p}_i}\dot{p}_i - \sum \gamma M_{p_k p_i} p_i = I_{p_o}\omega_o{}^2\xi_k(r_{FA})\theta_{con}$$

5. WIND-TUNNEL SUPPORT MODEL

Consider now the aeroelastic model for the wind-tunnel support system. The rotor support is described by a set of linear constant coefficient differential equations excited by forces and moments at the rotor hub. The hub motion produced by the support degrees of freedom completes the description. Let x_s be the vector of the support degrees of freedom and v_s, the vector of input or control variables for the support system. As for the rotor model, the vectors of the shaft motion at the hub (α), the aerodynamic gust components (g), and the rotor forces and moments acting on the hub (F) are defined as:

$$\alpha = \begin{bmatrix} x_h \\ y_h \\ z_h \\ \alpha_x \\ \alpha_y \\ \alpha_z \end{bmatrix}, \quad g = \begin{bmatrix} u_G \\ v_G \\ w_G \end{bmatrix}, \quad F = \begin{bmatrix} \gamma \dfrac{C_T}{\sigma a} \\ \gamma \dfrac{2C_H}{\sigma a} \\ -\gamma \dfrac{2C_Y}{\sigma a} \\ \gamma \dfrac{C_Q}{\sigma a} \\ \gamma \dfrac{2C_{M_y}}{\sigma a} \\ -\gamma \dfrac{2C_{M_x}}{\sigma a} \end{bmatrix}$$

The gust components are here in the tunnel axis system (x downstream, y to the right, and z upward), while the components of α and F are in the shaft axis system. The equations of motion for the wind-tunnel support then take the following form:

$$a_2\ddot{x}_s + a_1\dot{x}_s + a_0 x_s = bv_s + b_G g + \tilde{a}F$$

and the rotor hub motion is given by the linear transformation:

$$\alpha = cx_s$$

The equations are dimensionless, based on ρ, Ω, and R. With F in rotor coefficient form, it is also convenient to normalize the equations by dividing by the characteristic inertia $(N/2)I_b$. Note that the matrix $\tilde{a}$ may always be obtained from the matrix c (reciprocity theorem).

The sophistication required of the description of the wind-tunnel strut and balance system and the aircraft or rotor test module depends on the dynamic problem being studied and also, of course, on the available data from which the model is to be constructed. Consider, for example, a general model based on a normal vibration mode description of the elastic wind-tunnel support system. The displacement $\vec{u}(\vec{r},t)$ and rotation $\vec{\theta}(\vec{r},t)$ at an arbitrary point $\vec{r}$ are expanded in series of orthogonal vibration modes, with generalized coordinates $q_{s_k}(t)$:

$$\vec{u}(\vec{r},t) = \sum_k q_{s_k}(t)\vec{\xi}_k(\vec{r})$$

$$\vec{\theta}(\vec{r},t) = \sum_k q_{s_k}(t)\vec{\gamma}_k(\vec{r})$$

The differential equations for the degrees of freedom q_{s_k} are then

$$M_k\left(\ddot{q}_{s_k} + g_s\omega_k\dot{q}_{s_k} + \omega_k{}^2 q_{s_k}\right) = Q_k$$

where M_k is the modal mass and ω_k, the natural frequency; g_s is here the structural damping coefficient for the mode and Q_k is the generalized force.

The hub motion is obtained from the mode shapes $\vec{\xi}$ and $\vec{\gamma}$ at the rotor hub, $\alpha = c\left\{q_{s_k}\right\}$, where

$$C = \begin{bmatrix} & \vec{i}_S \cdot \vec{\xi}_k & \\ & \vec{j}_S \cdot \vec{\xi}_k & \\ \cdots & \vec{k}_S \cdot \vec{\xi}_k & \cdots \\ & \vec{i}_S \cdot \vec{\gamma}_k & \\ & \vec{j}_S \cdot \vec{\gamma}_k & \\ & \vec{k}_S \cdot \vec{\gamma}_k & \end{bmatrix} = \begin{bmatrix} \cdots & R_{ST}\vec{\xi}_k & \cdots \\ & R_{ST}\vec{\gamma}_k & \end{bmatrix}$$

Here $\vec{\xi}$ and $\vec{\gamma}$ are in the tunnel axis system, so R_{ST} is the rotation matrix to the shaft axes (see section 3.1). The generalized forces due to the rotor hub forces and moments are $\{Q_k\} = \tilde{a}F$, where

$$\tilde{a} = \begin{bmatrix} & & & \vdots & & \\ 2\vec{k}_S \cdot \vec{\xi}_k & \vec{i}_S \cdot \vec{\xi}_k & -\vec{j}_S \cdot \xi_k & -2\vec{k}_S \cdot \vec{\gamma}_k & \vec{j}_S \cdot \vec{\gamma}_k & -\vec{i}_S \cdot \vec{\gamma}_k \\ & & & \vdots & & \end{bmatrix}$$

Generally, Q_k may also have additional contributions, including mechanical or aerodynamic damping forces of the form $\sum_i C_{ki}q_{s_i}$, support-system control inputs of form $\sum_i b_{ki}v_{s_i}$, and aerodynamic gust forces on the support of the form $\sum_i b_{G_{ki}}g_i$. Making the equations dimensionless and normalizing as appropriate produces the required model for the wind-tunnel support.

6. COUPLED ROTOR AND SUPPORT MODEL

The equations of motion have been derived for the rotor and for the wind-tunnel support. Now these equations may be combined to construct the set of linear differential equations which describes the dynamics of the coupled

system. The vectors of the degrees of freedom (x), the control inputs (v), and the aerodynamic gust components (g) are defined as:

$$x = \begin{bmatrix} x_R \\ x_S \end{bmatrix}, \quad v = \begin{bmatrix} v_R \\ v_S \end{bmatrix}, \quad g = \begin{bmatrix} u_G \\ v_G \\ w_G \end{bmatrix}$$

The equations of motion for the coupled rotor and wind-tunnel support model then take the following form:

$$A_2\ddot{x} + A_1\dot{x} + A_0x = Bv + B_Gg$$

To derive the coupled equations, recall the results for the rotor equations of motion and the hub forces and moments from section 2.6:

$$A_2\ddot{x}_R + A_1\dot{x}_R + A_0x_R + \tilde{A}_2\ddot{\alpha} + \tilde{A}_1\dot{\alpha} + \tilde{A}_0\alpha = Bv_R + B_Gg_s$$

$$F = C_2\ddot{x}_R + C_1\dot{x}_R + C_0x_R + C_2\ddot{\alpha} + C_1\dot{\alpha} + C_0\alpha + D_Gg_s$$

and the results for the support equations and the hub motion (from section 5):

$$a_2\ddot{x}_s + a_1\dot{x}_s + a_0x_s = bv_s + b_Gg + \tilde{a}F$$

$$\alpha = cx_s$$

The gust components in the rotor equations are transformed to the tunnel (wind) axes by the substitution $g_s = R_{ST}g$. The coupled equations of motion are obtained by substituting the hub motion (α) into the rotor forces and moments (F) and then substituting for F into the support equations of motion. The following coefficient matrices for the complete system may then be constructed:

$$A_2 = \left[\begin{array}{c|c} A_2 & \tilde{A}_2c \\ \hline -\tilde{a}C_2 & a_2 - \tilde{a}\tilde{C}_2c \end{array}\right]$$

$$A_1 = \left[\begin{array}{c|c} A_1 & \tilde{A}_1c \\ \hline -\tilde{a}C_1 & a_1 - \tilde{a}\tilde{C}_1c \end{array}\right]$$

$$A_0 = \left[\begin{array}{c|c} A_0 & \tilde{A}_0c \\ \hline -\tilde{a}C_0 & a_0 - \tilde{a}\tilde{C}_0c \end{array}\right]$$

$$B = \left[\begin{array}{c|c} B & 0 \\ \hline 0 & b \end{array}\right]$$

$$B_G = \left[\frac{B_G R_{ST}}{b_G + \tilde{a} D_G R_{ST}}\right]$$

6.1 Rigid Control System

Frequently, the rotor is modeled as having a rigid control system. This option requires some restructuring of the equations of motion, for the rotor equations have been derived assuming that the blade rigid pitch degrees of freedom are present in the model and that the blade pitch control inputs enter through these degrees of freedom. A rigid control system is the limit of infinite control system and blade torsional stiffness. Thus the rotor blade elastic torsion motion is zero, and the solution of the rigid pitch equation of motion reduces to

$$p_o = \theta^{con} - \sum K_{P_i} q_i + K_{P_G} \beta_G + (\theta_{1S} \cos \psi_m - \theta_{1C} \sin \psi_m)\psi_s$$

or, in the nonrotating frame,

$$\begin{pmatrix} \theta_o \\ \theta_{1C} \\ \theta_{1S} \end{pmatrix}_o = \begin{pmatrix} \theta_o \\ \theta_{1C} \\ \theta_{1S} \end{pmatrix}_{con} - K_{P_i} \begin{pmatrix} \beta_o \\ \beta_{1C} \\ \beta_{1S} \end{pmatrix}_i - K_{P_G} \begin{pmatrix} 0 \\ \beta_{GC} \\ \beta_{GS} \end{pmatrix} + \begin{pmatrix} 0 \\ \theta_{1S} \\ -\theta_{1C} \end{pmatrix} \psi_s$$

(the result for $N \neq 3$ is similar). The blade pitch motion in this limit consists of the control input θ^{con}, feedback of the bending and gimbal motion due to the kinematic coupling, and a pitch change due to the azimuth perturbation with a fixed swashplate. Thus it is first necessary to account for the pitch/bending, pitch/gimbal, and pitch/azimuth coupling, which requires only operations on the columns of A_0 (as indicated by the above equations). Next the control matrix B is reconstructed from the rigid pitch columns of A_0 since the blade pitch motion becomes a control variable rather than a degree of freedom. Finally, the equations of motion for the rigid pitch degrees of freedom may be dropped from the system.

6.2 Quasistatic Approximation

A quasistatic approximation is often used in rotor dynamics to reduce the order of the system. In the present analysis of the rotor in a wind tunnel, the quasistatic option is applicable to the inflow dynamics and sometimes to the blade pitch/torsion degrees of freedom. Let us assume that the equations

of motion have been reordered so that the quasistatic variables (x_0) appear last in the state vector:

$$x = \begin{bmatrix} x_1 \\ x_0 \end{bmatrix}$$

The quasistatic approximation consists of neglecting the acceleration and velocity terms of the quasistatic variables. Thus the equations of motion take the form:

$$\begin{bmatrix} A_2^{11} & 0 \\ A_2^{01} & 0 \end{bmatrix} \begin{pmatrix} x_1 \\ x_0 \end{pmatrix}^{\cdot\cdot} + \begin{bmatrix} A_1^{11} & 0 \\ A_1^{01} & 0 \end{bmatrix} \begin{pmatrix} x_1 \\ x_0 \end{pmatrix}^{\cdot} + \begin{bmatrix} A_0^{11} & A_0^{10} \\ A_0^{01} & A_0^{00} \end{bmatrix} \begin{pmatrix} x_1 \\ x_0 \end{pmatrix} = \begin{bmatrix} B^1 \\ B^0 \end{bmatrix} v$$

Frequently, the x_1 acceleration and velocity terms in the x_0 equations will also be neglected ($A_2^{01} = A_1^{01} = 0$). The quasistatic variables now are no longer described by differential equations but rather by linear algebraic equations. The solution for x_0 then is simply

$$x_0 = [A_0^{00}]^{-1}[B^0 v - A_2^{01}\ddot{x}_1 - A_1^{01}\dot{x}_1 - A_0^{01}x_1]$$

Substituting for x_0 in the x_1 equations of motion gives then the reduced-order equations for the quasistatic approximation:

$$[A_2^{11} - A_0^{10}(A_0^{00})^{-1}A_2^{01}]\ddot{x}_1 + [A_1^{11} - A_0^{10}(A_0^{00})^{-1}A_1^{01}] + \dot{x}_1[A_0^{11} - A_0^{10}(A_0^{00})^{-1}A_0^{01}]x_1$$

$$= [B^1 - A_0^{10}(A_0^{00})^{-1}B^0]v$$

The quasistatic approximation retains the low-frequency dynamics of the x_0 variables. Whether that is a satisfactory representation of the aeroelastic behavior should always be verified by comparison with the results of the higher order model.

PART II. AEROELASTIC ANALYSIS FOR A ROTORCRAFT IN FLIGHT

An aeroelastic analysis for a general two-rotor aircraft in steady-state flight is now developed (fig. 13). The rotorcraft to which the analysis is applicable include single main-rotor and tail-rotor helicopters, tandem-rotor helicopters, and side-by-side or tilting proprotor aircraft. Section 7 describes the rotorcraft configuration considered. In section 8, the equations of motion for the helicopter fuselage are derived, including both rigid body and elastic motions of the aircraft. The aerodynamic forces of the aircraft wing-body, horizontal tail, and vertical tail are included. A simple model for rotor-fuselage-tail aerodynamic interference (trim and perturbation) is developed. The rotor model used is that developed in part I; extensions of the model required for the helicopter in flight (principally in the inflow and transmission models) are developed in section 9. Finally, in section 10, the rotor and aircraft body equations are combined to construct the equations of motion for the coupled system. The analysis for the side-by-side or tilting proprotor configuration is simplified if complete lateral symmetry is assumed in both the aircraft and the flight state. In that case, the longitudinal and lateral motions separate, allowing the solution of two lower order problems.

7. ROTORCRAFT CONFIGURATION

The rotorcraft configuration features that have a major role in the dynamic behavior are the aircraft velocity and orientation and the position and orientation of the rotors. The aircraft flight path is usually specified, and by a trim calculation in which zero net force and moment on the aircraft are achieved, the control positions and aircraft orientation are determined. The orientation and position of the rotors are fixed geometric parameters.

7.1 Orientation

7.1.1 Flight-path and trim Euler angles— The aircraft flight path is specified by the velocity magnitude V and the orientation of the velocity vector with respect to earth axes. The velocity vector has a yaw angle ψ_{FP} (positive to the right) and a pitch angle θ_{FP} (positive upward). Thus the climb and side velocities of the aircraft are $V_{climb} = V \sin \theta_{FP}$ and $V_{side} = V \sin \psi_{FP} \cos \theta_{FP}$. The aircraft attitude with respect to earth axes is specified by the trim Euler angles, first pitch θ_{FT} (positive nose-up), then roll ϕ_{FT} (positive to the right). Airplane convention is followed here for the coordinate systems — x positive forward, y positive to the right, and z positive downward (see ref. 15). Between the earth axes (E system) and the velocity axes (V system) are rotations ψ_{FP} and θ_{FP}. Between the earth axes and the body axes (F system) are rotations θ_{FT} and ϕ_{FT}. Thus the rotation matrix between the V system and the F system is

$$
R_{FV} = \begin{bmatrix}
C_{\theta_{FT}} C_{\theta_{FP}} C_{\psi_{FP}} + S_{\theta_{FT}} S_{\theta_{FP}} & -C_{\theta_{FT}} S_{\psi_{FP}} & C_{\theta_{FT}} S_{\theta_{FP}} C_{\psi_{FP}} - S_{\theta_{FT}} C_{\theta_{FP}} \\
S_{\theta_{FT}} S_{\phi_{FT}} C_{\theta_{FP}} C_{\psi_{FP}} + C_{\phi_{FT}} C_{\theta_{FP}} S_{\psi_{FP}} - C_{\theta_{FT}} S_{\phi_{FT}} S_{\theta_{FP}} & -S_{\theta_{FT}} S_{\phi_{FT}} S_{\psi_{FP}} + C_{\phi_{FT}} C_{\psi_{FP}} & S_{\theta_{FT}} S_{\phi_{FT}} S_{\theta_{FP}} C_{\psi_{FP}} + C_{\phi_{FT}} S_{\theta_{FP}} S_{\psi_{FP}} + C_{\theta_{FT}} S_{\phi_{FT}} C_{\theta_{FP}} \\
S_{\theta_{FT}} C_{\phi_{FT}} C_{\theta_{FP}} C_{\psi_{FP}} - S_{\phi_{FT}} C_{\theta_{FP}} S_{\psi_{FP}} - C_{\theta_{FT}} C_{\phi_{FT}} S_{\theta_{FP}} & -S_{\theta_{FT}} C_{\phi_{FT}} S_{\psi_{FP}} - S_{\phi_{FT}} C_{\psi_{FP}} & S_{\theta_{FT}} C_{\phi_{FT}} S_{\theta_{FP}} C_{\psi_{FP}} - S_{\phi_{FT}} S_{\theta_{FP}} S_{\psi_{FP}} + C_{\theta_{FT}} C_{\phi_{FT}} C_{\theta_{FP}}
\end{bmatrix}
$$

The trim calculation determines the Euler angles θ_{FT} and ϕ_{FT} (and, perhaps, the flight-path climb angle θ_{FP} also).

The velocity of the aircraft is $\vec{V} = V\vec{i}_V$, so the components in the body axes are

$$
\begin{pmatrix} V_x \\ V_y \\ V_z \end{pmatrix} = VR_{FV}\vec{i}_V
$$

The acceleration due to gravity is $\vec{g} = g\vec{k}_E$ or, in body axes,

$$
g = g\vec{k}_E = g\begin{pmatrix} -\sin\theta_{FT} \\ \cos\theta_{FT}\sin\phi_{FT} \\ \cos\theta_{FT}\cos\phi_{FT} \end{pmatrix}
$$

7.1.2 Rotor position and orientation— The rotor hub position is specified in the body axes relative to the aircraft center-of-gravity position, $\vec{r}_{hub} = (x\vec{i}_F + y\vec{j}_F + z\vec{k}_F)_{hub}$. The rotor orientation is defined by a rotation matrix between the shaft axes (S system) and the aircraft body axes (F system):

$$\begin{pmatrix} \vec{i}_S \\ \vec{j}_S \\ \vec{k}_S \end{pmatrix} = R_{SF} \begin{pmatrix} \vec{i}_F \\ \vec{j}_F \\ \vec{k}_F \end{pmatrix}$$

The shaft axis components of the velocity seen by the rotor are then:

$$\begin{pmatrix} -\mu_x \\ \mu_y \\ \mu_z \end{pmatrix} = R_{SF} R_{FV} \begin{pmatrix} V \\ 0 \\ 0 \end{pmatrix}$$

The hub plane angle-of-attack and yaw angle may then be obtained from

$$\alpha_{HP} = \tan^{-1} \mu_z / \sqrt{\mu_x^2 + \mu_y^2}$$

$$\psi_{HP} = \tan^{-1} \mu_y / \mu_x$$

The sign of the lateral velocity μ_y must be changed for a clockwise rotating rotor (section 3.5), and if the induced velocity is included, the inflow ratio is $\lambda = \mu_z + \lambda_i$.

For a helicopter main rotor, the orientation with respect to the body axes is specified by a shaft angle of attack θ_R (positive for tilt forward) and a roll angle ϕ_R (positive to the right). Thus,

$$R_{SF} = \begin{bmatrix} -C_\theta & 0 & -S_\theta \\ -S_\phi S_\theta & C_\phi & S_\phi C_\theta \\ C_\phi S_\theta & S_\phi & -C_\phi C_\theta \end{bmatrix}$$

The orientation of a tail rotor is specified by a cant angle ϕ_R (positive upward) and a shaft angle of attack θ_R (positive forward). The tail rotor thrust is to the right for a counterclockwise rotating main rotor and to the left for clockwise rotation. Thus the definition of the tail-rotor shaft axes depends on the main rotor rotation direction. Let Ω_{mr} be +1 for a counterclockwise rotating main rotor -1 for clockwise rotation. Then the rotation matrix for the tail rotor is

$$R_{SF} = \begin{bmatrix} -C_\theta & \Omega_{mr} C_\phi S_\theta & -S_\phi S_\theta \\ 0 & S_\phi & \Omega_{mr} C_\phi \\ S_\theta & \Omega_{mr} C_\phi C_\theta & -S_\phi C_\theta \end{bmatrix}$$

The nacelle and rotor of a tilting proprotor aircraft can be tilted by an angle α_p, where $\alpha_p = 0$ for axial flow (airplane configuration), and $\alpha_p = 90°$ for edgewise flow (helicopter configuration). The rotor orientation is also described by a cant angle ϕ_R (positive outward in helicopter mode, zero in airplane mode) and a pitch angle θ_R (positive nose upward), which is the angle of attack of the shaft with respect to the body axes when $\alpha_p = 0$. Thus the rotation matrix is

$$R_{SF} = \begin{bmatrix} -C_\phi S_\alpha C_\theta - C_\alpha S_\theta & -S_\phi S_\alpha & C_\phi S_\alpha S_\theta - C_\alpha C_\theta \\ -C_\phi S_\phi (1 - C_\alpha) C_\theta - S_\phi S_\alpha S_\theta & C_\phi^2 + S_\phi^2 C_\alpha & C_\phi S_\phi (1 - C_\alpha) S_\theta - S_\phi S_\alpha C_\theta \\ (C_\phi^2 C_\alpha + S_\phi^2) C_\theta - C_\phi S_\alpha S_\theta & -C_\phi S_\phi (1 - C_\alpha) & -(C_\phi^2 C_\alpha + S_\phi^2) S_\theta - C_\phi S_\alpha C_\theta \end{bmatrix}$$

The rotor hub location $\vec{r}_{hub}$ for the tilting proprotor aircraft is defined by the pivot location $\vec{r}_{pivot}$ and the mast height h, so that

$$\vec{r}_{hub} = \vec{r}_{pivot} + h \begin{bmatrix} (C_\phi^2 C_\alpha + S_\phi^2) C_\theta - C_\phi S_\alpha S_\theta \\ -C_\phi S_\phi (1 - C_\alpha) \\ -(C_\phi^2 C_\alpha + S_\phi^2) S_\theta - C_\phi S_\alpha C_\theta \end{bmatrix}$$

7.1.3 Gust orientation— The aerodynamic gust components are defined with respect to the wind axes for the analysis of the rotorcraft in flight. The vector of gust velocity seen by the aircraft is

$$g = \begin{pmatrix} u_G \\ v_G \\ w_G \end{pmatrix}$$

where u_G is positive downward, v_G is positive from the right, and w_G is positive upward. The aircraft aerodynamic forces are derived for gust components in the body axes, g_F. Hence the transformation $g_F = R_{FV} g$ is required. The rotor aerodynamic forces were derived considering gust components in the shaft axes, g_S. The substitution $g_S = R_G g$, where

$$R_G = \begin{bmatrix} -1 & 0 & 0 \\ 0 & 1 & 0 \\ 0 & 0 & -1 \end{bmatrix} R_{SF} R_{FV}$$

into the equations of motion then transforms the gust components to the wind axes.

7.2 Pilot Controls

The control variables included in the rotorcraft model are collective and cyclic pitch of the two rotors, engine throttle θ_t, and the aircraft controls (wing flaperon angle δ_f, wing aileron angle δ_a, elevator angle δ_e, and rudder angle δ_r). The control vector is thus:

$$v^T = \left[\left(\theta_o^{con} \theta_{1C}^{con} \theta_{1S}^{con}\right)_1 \left(\theta_o^{con} \theta_{1C}^{con} \theta_{1S}^{con}\right)_2 \theta_t \delta_f \delta_e \delta_a \delta_r\right]$$

The pilot controls, however, consist of collective stick δ_o (positive upward), lateral cyclic stick δ_c (positive to the right), longitudinal cyclic stick δ_s (positive forward), pedal δ_p (positive yaw right), and throttle lever δ_t:

$$v_P = \begin{pmatrix} \delta_o \\ \delta_c \\ \delta_s \\ \delta_p \\ \delta_t \end{pmatrix}$$

A linear relationship between the control inputs of the pilot and the rotor and aircraft control variables is assumed:

$$v = T_{CFE} v_P + v_o$$

where v_o is the control input with all sticks centered ($v_P = 0$), and T_{CFE} is a transformation matrix defined by the control-system geometry. This transformation is required to obtain the aircraft response to the control input of the pilot. In addition, it is the pilot controls that must be adjusted to trim the rotorcraft. (The control transformation matrices for the single main-rotor and tail-rotor helicopter, the tandem main-rotor helicopter, and the side-by-side or tilting proprotor configurations are given in appendix C.)

7.3 Aircraft Trim

The construction of the equations of motion for the rotorcraft dynamics must be preceded by a trim calculation, which determines the aircraft control

settings and orientation required for the specified equilibrium flight conditions. Equilibrium flight requires that the net force and moment on the aircraft be zero, which gives six equations to solve for the six trim variables, consisting of four pilot controls and the two trim Euler angles (δ_o, δ_c, δ_s, δ_p, θ_{FT}, and ϕ_{FT}). This procedure is for level flight ($\theta_{FP} = 0$) or a specified climb velocity. If, instead, the power available is specified, such as for power-off descent, then an additional trim variable (flight-path angle θ_{FP}) and an additional equation (the power required equals the power available) must be included in the trim calculation.

The balance of forces and moments about the aircraft center of gravity and the balance of power give the trim equations. The contributions to the forces and moments are from aircraft weight, aircraft aerodynamic forces, and hub reactions of the two rotors. In helicopter coefficient form, the force, moment, and power equations are

$$\frac{a}{\gamma}\frac{W}{(NI_b\Omega^2/R)_1}\vec{k}_E + \left(\frac{C_H}{\sigma}\vec{i}_S + \frac{C_Y}{\sigma}\vec{j}_S + \frac{C_T}{\sigma}\vec{k}_S\right)_{\text{rotor 1}}$$

$$+ \frac{(\gamma NI_b\Omega^2/R)_2}{(\gamma NI_b\Omega^2/R)_1}\left(\frac{C_H}{\sigma}\vec{i}_S + \frac{C_Y}{\sigma}\vec{j}_S + \frac{C_T}{\sigma}\vec{k}_S\right)_{\text{rotor 2}}$$

$$+ \frac{V^2}{2\sigma A}\left\{-\left(\frac{D_{WB}}{q} + \frac{D_{HT}}{q} + \frac{D_{VT}}{q}\right)\vec{i}_V + \left(\frac{Y_{WB}}{q} - \frac{L_{VT}}{q}\right)\vec{j}_V - \left(\frac{L_{WB}}{q} + \frac{L_{HT}}{q}\right)\vec{k}_V\right\} = 0$$

$$\left\{\left(\frac{C_{M_x}}{\sigma}\vec{i}_S + \frac{C_{M_y}}{\sigma}\vec{j}_S - \frac{C_Q}{\sigma}\vec{k}_S\right) + \left(\vec{r}_{hub}\times\right)\left(\frac{C_H}{\sigma}\vec{i}_S + \frac{C_Y}{\sigma}\vec{j}_S + \frac{C_T}{\sigma}\vec{k}_S\right)\right\}_{\text{rotor 1}}$$

$$+ \left\{\frac{(\gamma NI_b\Omega^2)_2}{(\gamma NI_b\Omega^2)_1}\left(\frac{C_{M_x}}{\sigma}\vec{i}_S + \frac{C_{M_y}}{\sigma}\vec{j}_S - \frac{C_Q}{\sigma}\vec{k}_S\right)\right.$$

$$\left. + \frac{(\gamma NI_b\Omega^2/R)_2}{(\gamma NI_b\Omega^2/R)_1}\left(\vec{r}_{hub}\times\right)\left(\frac{C_H}{\sigma}\vec{i}_S + \frac{C_Y}{\sigma}\vec{j}_S + \frac{C_T}{\sigma}\vec{k}_S\right)\right\}_{\text{rotor 2}}$$

$$+ \left\{\frac{V^2}{2\sigma AR}\left(\frac{M_x}{q}\vec{i}_V + \frac{M_y}{q}\vec{j}_V + \frac{M_z}{q}\vec{k}_V\right) + \frac{V^2}{2\sigma A}\left(\vec{r}_{WB}\times\right)\left(-\frac{D}{q}\vec{i}_V + \frac{Y}{q}\vec{j}_V - \frac{L}{q}\vec{k}_V\right)\right\}_{WB}$$

$$+ \left\{\frac{V^2}{2\sigma A}\left(\vec{r}_{HT}\times\right)\left(-\frac{D}{q}\vec{i}_V - \frac{L}{q}\vec{k}_V\right)\right\}_{HT} + \left\{\frac{V^2}{2\sigma A}\left(\vec{r}_{VT}\times\right)\left(-\frac{D}{q}\vec{i}_V - \frac{L}{q}\vec{j}_V\right)\right\}_{VT} = 0$$

$$\left(\frac{C_Q}{\sigma}\right)_{\text{rotor 1}} + \frac{(\gamma N I_b \Omega^3)_2}{(\gamma N I_b \Omega^3)_1}\left(\frac{C_Q}{\sigma}\right)_{\text{rotor 2}} = \left(\frac{C_P}{\sigma}\right)_{\text{rotor power available}}$$

The components of the force and moment equations are obtained in the body axes (F system). Here W is the aircraft weight; and the hub reactions for rotor 2 are normalized using the parameters of that rotor, hence the factors accounting for the normalization of the coefficients. The aircraft aerodynamic forces are acting on the wing-body (WB), horizontal tail (HT), and vertical tail (VT). Here L, D, and Y are, respectively, the aerodynamic lift, drag, and side forces; M_x, M_y, and M_z are the roll, pitch, and yaw moments on the wing-body and q is the dynamic pressure.

A consideration of the aerodynamic interference between the rotors, wing, and tail is required to accurately calculate the trim state. A simple model for this interference is used here. The rotor-induced velocity, together with the aircraft velocity, is used to determine the angle of attack at the wing and tail. For the horizontal tail, the angle-of-attack change due to the wing wake is also included. The rotor-induced velocity λ_i is assumed to be directed along the rotor shaft ($\vec{k}_S$). A multiplicative factor on the induced velocity is used to account for the fraction of the aerodynamic surface within the wake and the fraction of the fully developed wake velocity achieved. A further multiplicative factor accounts for the decrease in the wake-induced velocity away from the wake boundaries (see, also, the discussion of the perturbation aerodynamic interference model, section 8.2). The angle-of-attack change at the horizontal tail due to the wing is calculated by

$$\Delta\alpha = \frac{0.45\ C_{L_{WB}}}{(\ell_w^2/S_w)^{0.735}(\ell_{HT}/c_w)^{0.25}}$$

where $C_{L_{WB}}$ is the wing lift coefficient; S_w, ℓ_w, and c_w are, respectively, wing area, span, and chord; and ℓ_{HT} is the tail length (ref. 16). Alternatively, all the interference effects could be included in the wing-body, horizontal tail, and vertical tail aerodynamic characteristics.

The trim equations are nonlinear in the control variables, of course. Thus an iterative solution procedure is required in which the control variables are incremented in the direction to achieve zero net force and moment, based on a set of local partial derivatives obtained at the beginning of the trim calculation by making step changes in the individual control variables. The solution is considered to have converged to the desired trim state when the net force and moment are within a certain tolerance level.

8. AIRCRAFT MODEL

The aeroelastic motion of the rotorcraft airframe is described by a set of linear, constant coefficient differential equations, excited by the hub

reactions of the two rotors. Let x_s be the vector of the aircraft degrees of freedom, v_s the vector of the aircraft control variables, and g_F the vector of the aerodynamic gust components. The equations of motion for the rotorcraft in flight are required in the following form:

$$a_2\ddot{x}_s + a_1\dot{x}_s + a_0x_s = bv_s + b_Gg_F + \tilde{a}F$$

and the hub motion is given by

$$\alpha = cx_s$$

Here F and α are as usual the rotor hub reactions and hub motion in the shaft axes (S system):

$$F = \begin{bmatrix} \gamma \dfrac{C_T}{\sigma a} \\ \gamma \dfrac{2C_H}{\sigma a} \\ -\gamma \dfrac{2C_Y}{\sigma a} \\ \gamma \dfrac{C_Q}{\sigma a} \\ \gamma \dfrac{2C_{M_y}}{\sigma a} \\ -\gamma \dfrac{C_{M_x}}{\sigma a} \end{bmatrix}, \qquad \alpha = \begin{bmatrix} x_h \\ y_h \\ z_h \\ \alpha_x \\ \alpha_y \\ \alpha_z \end{bmatrix}$$

(For convenience, only the terms for one rotor are shown, but, in fact, the interface between the aircraft and the rotor is required at both hubs. The parameters of rotor 1 are used to make quantities dimensionless and to normalize the aircraft equations of motion.)

In this section, the aircraft equations of motion are constructed in the required form. The aircraft degrees of freedom (x_s) consist of the six rigid-body degrees of freedom and the elastic free-vibration modes. The input variables (v_s) consist of the aircraft aerodynamic controls — flaperon, aileron, elevator, and rudder. An elementary model for rotor-wing-tail aerodynamic interference is also developed.

A body axis coordinate frame with its origin at the aircraft center of gravity (F system) is used to describe the motion. Airplane practice is followed for these axes — x forward, y to the right, and z downward (ref. 15). The coordinate frame used is not a principal axis system, however. Moreover, the airplane practice of aligning the x axis with the trim velocity is not followed since, for rotorcraft, the hover case (V = 0) must be considered.

Lateral symmetry of the aircraft inertia and of the aerodynamic surfaces is assumed; the location and orientation of the two rotors is entirely general, however.

8.1 Aircraft Motion

8.1.1 Degrees of freedom— The linear and angular rigid-body motion of the aircraft is defined in the body axes (F system). The linear degrees of freedom are x_F (positive forward), y_F (positive to the right), and z_F (positive downward). These variables are dimensionless based on the rotor radius R. Thus the velocity perturbations are normalized using the rotor tip speed ΩR rather than the forward speed V as is airplane practice. The angular degrees of freedom are the Euler angles ψ_F (yaw to the right), θ_F (pitch nose-up), and ϕ_F (roll right). Then the linear and angular velocity perturbations are

$$\vec{u}_F = \dot{x}_F\vec{i}_F + \dot{y}_F\vec{j}_F + \dot{z}_F\vec{k}_F$$

$$\vec{\omega}_F = R_e\left(\dot{\phi}_F\vec{i}_F + \dot{\theta}_F\vec{j}_F + \dot{\psi}_F\vec{k}_F\right)$$

where

$$R_e = \begin{bmatrix} 1 & 0 & -\sin\theta_{FT} \\ 0 & \cos\phi_{FT} & \sin\phi_{FT}\cos\theta_{FT} \\ 0 & -\sin\phi_{FT} & \cos\phi_{FT}\cos\theta_{FT} \end{bmatrix}$$

For the elastic motion of the aircraft in flight, the displacement $\vec{u}$ and rotation $\vec{\theta}$ at an arbitrary point $\vec{r}$ are expanded in series of the orthogonal free vibration modes:

$$\vec{u}(\vec{r},t) = \sum_{k=1}^{\infty} q_{s_k}(t)\vec{\xi}_k(\vec{r})$$

$$\vec{\theta}(\vec{r},t) = \sum_{k=1}^{\infty} q_{s_k}(t)\vec{\gamma}_k(\vec{r})$$

The first six degrees of freedom are the rigid body motions: $q_{s_1}, \ldots, q_{s_6}$ are, respectively, ϕ_F, θ_F, ψ_F, x_F, y_F, and z_F. The generalized coordinates q_{s_k} for $k = 7$ to ∞ are the elastic modes of the aircraft. Orthogonality implies that the elastic vibration modes produce no net displacement of the aircraft center of gravity or rotation of the principal axes.

For the rigid-body motions, the mode shapes are simply

$$\left[\vec{\xi}_1 \; . \; . \; . \; \vec{\xi}_6\right] = \left[(-\vec{r}\times)R_e \,|\, I\right]$$
$$\left[\vec{\gamma}_1 \; . \; . \; . \; \vec{\gamma}_6\right] = \left[R_e \,|\, 0\right]$$

8.1.2 Hub motion— The linear and angular motion at the rotor hub in the shaft axes (S system) is then

$$\begin{pmatrix} x_h \\ y_h \\ z_h \\ \alpha_x \\ \alpha_y \\ \alpha_z \end{pmatrix} = \begin{bmatrix} & \vec{i}_S \cdot \vec{\xi}_k(\vec{r}_{hub}) & \\ & \vec{j}_S \cdot \vec{\xi}_k(\vec{r}_{hub}) & \\ & \vec{k}_S \cdot \vec{\xi}_k(\vec{r}_{hub}) & \\ \cdots & \vec{i}_S \cdot \vec{\gamma}_k(\vec{r}_{hub}) & \cdots \\ & \vec{j}_S \cdot \vec{\gamma}_k(\vec{r}_{hub}) & \\ & \vec{k}_S \cdot \vec{\gamma}_k(\vec{r}_{hub}) & \end{bmatrix} \left\{ q_{s_k} \right\}$$

or

$$\alpha = \left[\begin{array}{c|c|ccc} R_{SF}(-\vec{r}_{hub}\times)R_e & R_{SF} & \cdots & R_{SF}\vec{\xi}_k & \cdots \\ \hline R_{SF}R_e & 0 & \cdots & R_{SF}\vec{\gamma}_k & \cdots \end{array}\right] x_s$$

$$= c x_s$$

The total velocity of a point is the sum of the trim and perturbation velocities, $\dot{\vec{u}} = \vec{V} + \sum \dot{q}_{s_k}\vec{\xi}_k$, in body axes. The rotor equations require the velocity components at the hub in an inertial frame, however (S system), and the Euler angle rotations between the body and inertial axes introduce perturbations of the trim velocity $\vec{V}$. So the perturbation velocity becomes $\dot{\vec{u}} = \vec{\alpha}_F\times\vec{V} + \sum \dot{q}_{s_k}\vec{\xi}_k$, where, in the S system,

$$\vec{\alpha}_F\times\vec{V} = \begin{bmatrix} \lambda\alpha_y - \mu_y\alpha_z \\ -\lambda\alpha_x - \mu_x\alpha_z \\ \mu_x\alpha_y + \mu_y\alpha_x \end{bmatrix}$$

It follows that the $(\dot{x}_h,\dot{y}_h,\dot{z}_h)$ columns of the rotor matrices $\tilde{A}_1$ and $\tilde{C}_1$ contribute to the $(\alpha_x,\alpha_y,\alpha_z)$ columns of $\tilde{A}_o$ and $\tilde{C}_o$, which exactly cancel the existing terms due to the rotation of the inertial axes relative to the velocity components μ and λ (see the matrices in section 2.6). The result

is that the net angular hub motion columns of $\tilde{A}_o$ and $\tilde{C}_o$ are zero for the Euler angles.

Furthermore, the acceleration is $\ddot{\vec{u}} = \vec{\omega}_F \times \vec{V} + \sum \ddot{q}_{s_k} \vec{\xi}_k$, where the second term is the inertial acceleration due to the rotation of the trim velocity vector by the body axes angular velocity. The components of this additional acceleration in the shaft axes system are

$$\Delta \begin{pmatrix} x_h \\ y_h \\ z_h \end{pmatrix}^{\cdot\cdot} = \vec{\omega}_F \times \vec{V} = R_{SF}(-\vec{V}\times) R_e \begin{pmatrix} \dot{\phi}_F \\ \dot{\theta}_F \\ \dot{\psi}_F \end{pmatrix}$$

In summary, the hub motion is $\alpha = cx_s$ (where the matrix c is given above), with two exceptions. First, for the Euler angles, the net $(\alpha_x, \alpha_y, \alpha_z)$ columns of the rotor matrices $\tilde{A}_o$ and $\tilde{C}_o$ are zero because of the use of body axes. Second, in $\ddot{\alpha}$ there are additional linear acceleration terms due to the Euler angle velocities, $\Delta\ddot{\alpha} = \bar{c}x_s$ (where only the upper righthand 3×3 submatrix of $\bar{c}$ is nonzero).

8.1.3 Equations of motion and hub forces— Following the usual steps of airplane flight-dynamics analyses (ref. 15), the rigid-body equations of motion are obtained by equating the angular and linear acceleration to the net moments and forces on the aircraft: $I\dot{\vec{\omega}}_F = \sum \vec{M}$ and $M(\dot{\vec{u}}_F + \vec{\omega}_F \times \vec{V}) = \sum \vec{F}$. In terms of the body axes degrees of freedom then, including the gravitational force, the equations are

$$R_e^T I^* R_e \begin{pmatrix} \phi_F \\ \theta_F \\ \psi_F \end{pmatrix}^{\cdot\cdot} = \begin{pmatrix} Q_1^* \\ Q_2^* \\ Q_3^* \end{pmatrix}$$

$$M^* \begin{pmatrix} x_F \\ y_F \\ z_F \end{pmatrix}^{\cdot\cdot} - M^*(\vec{V}\times) R_e \begin{pmatrix} \phi_F \\ \theta_F \\ \psi_F \end{pmatrix}^{\cdot\cdot}$$

$$+ M^* g \begin{bmatrix} 0 & \cos\theta_{FT} & 0 \\ -\cos\theta_{FT}\cos\phi_{FT} & \sin\theta_{FT}\sin\phi_{FT} & 0 \\ \cos\theta_{FT}\sin\phi_{FT} & \sin\theta_{FT}\cos\phi_{FT} & 0 \end{bmatrix} \begin{pmatrix} \phi_F \\ \theta_F \\ \psi_F \end{pmatrix} = \begin{pmatrix} Q_4^* \\ Q_5^* \\ Q_6^* \end{pmatrix}$$

Here M is the aircraft mass (including the rotors) and I, the moment of inertia matrix:

$$I = \begin{bmatrix} I_x & 0 & -I_{xz} \\ 0 & I_y & 0 \\ -I_{xz} & 0 & I_z \end{bmatrix}$$

($I_{xy} = I_{yz} = 0$ since lateral symmetry is assumed). The equations are dimensionless and are normalized by dividing by the characteristic inertia $(N/2)I_b$ (using the parameters of rotor 1). Thus $M^* = M/[(1/2)NI_b/R^2]$ and $I^* = I/[(1/2)NI_b]$. Note that the gravitational constant g is also dimensionless based on the acceleration $\Omega^2 R$.

For the elastic degrees of freedom, since orthogonal free-vibration modes are used, the equations of motion are simply

$$M_k^* \left(\ddot{q}_{s_k} + g_s \omega_k \dot{q}_{s_k} + \omega_k^2 q_{s_k}\right) = Q_k^* , \qquad k \geqslant 7$$

where M_k is the generalized mass, the normalized mass is $M_k^* = M_k/[(1/2)NI_b/R^2)]$, ω_k is the natural frequency of the mode, and g_s is the structural damping coefficient.

There are two sources for the generalized forces Q_k^*: the rotor hub reactions and the aerodynamic forces on the aircraft. The generalized force due to the rotor hub reaction is $Q_k = \vec{\xi}_k(\vec{r}_{hub}) \cdot \vec{F}_{hub} + \vec{\gamma}_k(\vec{r}_{hub}) \cdot \vec{M}_{hub}$. Normalizing Q_k by dividing by $(N/2)I_b$ gives then $\{Q_k^*\} = \tilde{a}F$, where

$$\tilde{a} = \begin{bmatrix} 2\vec{k}_S \cdot \vec{\xi}_k & \vec{i}_S \cdot \vec{\xi}_k & -\vec{j}_S \cdot \vec{\xi}_k & \vdots & -2\vec{k}_S \cdot \vec{\gamma}_k & \vec{j}_S \cdot \vec{\gamma}_k & -\vec{i}_S \cdot \vec{\gamma}_k \\ & & & \vdots & & & \end{bmatrix}$$

$$= c^T \begin{bmatrix} 0 & 1 & 0 & 0 & 0 & 0 \\ 0 & 0 & -1 & 0 & 0 & 0 \\ 2 & 0 & 0 & 0 & 0 & 0 \\ 0 & 0 & 0 & 0 & 0 & -1 \\ 0 & 0 & 0 & 0 & 1 & 0 \\ 0 & 0 & 0 & -2 & 0 & 0 \end{bmatrix}$$

The aircraft aerodynamic forces are obtained in section 8.4.

8.2 Aerodynamic Interference

The interference between the rotor wake and the aircraft aerodynamic surfaces (wing and tail) can be a factor in the dynamic behavior. As a simple model of this aerodynamic interference, it is assumed that there is a perturbation velocity at the wing, the horizontal tail, and the vertical tail, which is a linear combination of the perturbation induced velocities from the two rotors (λ_{R_1} and λ_{R_2}). Including a first-order time lag, the equations for the interference velocities are then

$$\tau_W \dot{\lambda}_W + \lambda_W = K_{W_1} C_{W_1} \lambda_{R_1} + K_{W_2} C_{W_2} \frac{(\Omega R)_2}{(\Omega R)_1} \lambda_{R_2}$$

$$\tau_H \dot{\lambda}_H + \lambda_H = K_{H_1} C_{H_1} \lambda_{R_1} + K_{H_2} C_{H_2} \frac{(\Omega R)_2}{(\Omega R)_1} \lambda_{R_2}$$

$$\tau_V \dot{\lambda}_V + \lambda_V = K_{V_1} C_{V_1} \lambda_{R_1} + K_{V_2} C_{V_2} \frac{(\Omega R)_2}{(\Omega R)_1} \lambda_{R_2}$$

A time lag of $\tau = \ell/V$ is used, where V is the aircraft velocity and ℓ is the distance between the aerodynamic surface and the dominant rotor.

The first multiplicative factors (K) account for the maximum fraction of the aerodynamic surface affected by the wake and the fraction of the fully developed wake velocity achieved. Typical values would be $K = 1.5$ to 1.8 (or 0 for no interference). The second multiplicative factors (C) account for the cosine of the angle between the wake axis and the normal to the aerodynamic surface, and the decrease in the wake-induced velocity away from the wake surface. The following expression is used: C = (cosine of angle between wake and surface)/(maximum of 1 and $1 + L$), where L is the perpendicular distance from the aerodynamic surface to the nearest wake boundary ($L < 0$ if the surface is inside the rotor wake cylinder).

8.3 Aircraft Equations of Motion

The equations of motion for the aircraft in flight may now be written:

$$a_2 \ddot{x}_s + a_1 \dot{x}_s + a_0 x_s = Q_{rotor} + Q_{aero}$$

The vector of the aircraft degrees of freedom consists of the six angular and linear rigid-body motions, the generalized coordinates of the antisymmetric and symmetric elastic modes, and the aerodynamic interference velocities:

$$x_s = \begin{bmatrix} \phi_F \\ \theta_F \\ \psi_F \\ x_F \\ y_F \\ z_F \\ q_{s_k}\text{anti} \\ q_{s_k}\text{sym} \\ \lambda_w \\ \lambda_H \\ \lambda_v \end{bmatrix}$$

The generalized force due to one rotor is $Q_{rotor} = \tilde{a}F$, and the hub motion for one rotor is $\alpha = cx_s$. There are additional linear acceleration terms due to the Euler angle velocities given by $\Delta\ddot{\alpha} = \bar{c}x_s$.

The matrices c and $\bar{c}$ are defined in section 8.1.2; $\tilde{a}$ is given in section 8.1.3 (note that $\tilde{a}$ can be obtained directly from c). The inertia, structural, and gravitation forces are included in the matrices of the equations coefficients (appendix D1).

8.4 Aerodynamic Forces

To complete the aircraft equations of motion, the aerodynamic forces acting on the wing-body, horizontal tail, and vertical tail are required. Helicopter airframe aerodynamics involves complex nonlinear phenomena, particularly significant aerodynamic interference such as between the tail and the rotor and fuselage. It is difficult to include such effects in any simple model. For best results, therefore, experimental data should be used as much as possible, but often such data are simply not available. Thus analytical expressions for the aerodynamic stability derivatives are required.

The aerodynamic forces on the wing and tail are calculated by a strip theory analysis. The generalized force is obtained by integrating the section lift and drag forces and the section moment along the span. Three-dimensional effects are accounted for in the integrated aerodynamic characteristics used for the wing and tail. A body axis system is used, but with the x axis not aligned with the aircraft velocity vector. Otherwise, the analysis follows the usual derivation of airplane stability derivatives (see ref. 15).

Lateral symmetry is assumed for the aerodynamic forces. Specifically, it is assumed that the trim velocity and the center of action of the wing and tail are in the x-z plane. Then the symmetric and the antisymmetric modes of the airframe are not coupled by the aerodynamic forces.

The aircraft motion consists of the rigid body and elastic degrees of freedom. Consistent with the strip theory analysis, the wing elastic motion is described by vertical and chordwise bending and torsion, including wing root motion due to the fuselage flexibility. For the kth symmetric or antisymmetric mode of the airframe, the wing motion is thus described by vertical deflection $z_k(\ell)$ (positive upward), chordwise deflection $x_k(\ell)$ (positive aft), and torsion or pitch $\theta_k(\ell)$ (positive nose-up), where ℓ is the spanwise coordinate ($\ell = 0$ at the root, and $\ell = \pm(1/2)\ell_w$ at the wing tips). For symmetric modes, x_k, z_k, and θ_k are nonzero at the root due to the fuselage motion (but $x_k'(0) = z_k'(0) = 0$). For antisymmetric modes, $x_k'(0)$ and $z_k(0)$ are nonzero, while $x_k(0) = z_k(0) = \theta_k(0) = 0$; in addition, the fuselage motion gives a lateral reflection of the wing y_k (positive to the right).

For the tail motion, only rigid linear and angular motion due to the fuselage flexibility is considered; bending and torsion of the tail surfaces are neglected. Thus the horizontal tail motion for symmetric modes is described by vertical deflection z_k (positive upward), longitudinal deflection x_k (positive forward), and pitch θ_k (positive nose-up). The vertical tail motion for antisymmetric modes consists of lateral deflection y_k (positive to the right), roll ϕ_k (positive roll right), and yaw ψ_k (positive yaw right). There is no vertical tail motion in symmetric modes; the horizontal tail motion in antisymmetric modes is just roll ϕ_k (positive roll right).

The aircraft controls considered are wing flaperon deflection δ_f and aileron deflection δ_a (symmetric and antisymmetric motion of the wing control surfaces), horizontal tail elevator deflection δ_e, and vertical tail rudder deflection δ_r. Aerodynamic forces due to the three gust components (in the F body axis system) are included.

The aerodynamic forces on the aircraft, required to complete the equations of motion in section 8.3, take the following form:

$$Q_{aero} = -a_2\ddot{x}_s - a_1\dot{x}_s - a_0x_s + bv_s + b_Gg_F$$

The vector of aircraft degrees of freedom x_s is defined in section 8.3. The vector of the aircraft controls v_s and the components of the gust vector g_F (in the F system) are

$$v_s = \begin{pmatrix} \delta_f \\ \delta_e \\ \delta_a \\ \delta_r \end{pmatrix}, \qquad g_F = \begin{pmatrix} u_G \\ v_G \\ w_G \end{pmatrix}_F$$

The matrices of the aerodynamic coefficients are given in appendix D2. Expressions for the aerodynamic coefficients required in these matrices are given in appendix E.

9. ROTOR MODEL DETAILS FOR THE FLIGHT CASE

To treat the general twin-rotor helicopter, a number of extensions of the rotor model are required, principally in the models for the inflow dynamics and the rotor speed dynamics. Rotor-rotor aerodynamic interference is considered, in both the trim- and perturbation-induced velocities. Ground effect is also included in the inflow dynamics model. Pitch/mast-bending coupling is introduced. A transmission and engine model for two interconnected rotors is derived. The drive train dynamics are described by the rotor speed, interconnect shaft torsion, and engine shaft torsion degrees of freedom. The throttle control variable is introduced. Finally, a governor with collective or throttle feedback of rotor speed is considered.

9.1 Rotor-Rotor Aerodynamic Interference

With twin-rotor aircraft, it is necessary to account for the rotor-rotor aerodynamic interference in both the trim- and perturbation-induced velocities. The model used expressed the induced velocity at each rotor as a linear combination of the isolated rotor-induced velocities. Let λ_{i_1} and λ_{i_2} be the trim-induced velocities of the two isolated rotors (calculated as described in section 2.3.3). Then the trim inflow ratios are

$$\lambda_1 = \mu_{z_1} + \lambda_{i_1} + \kappa_{12} \frac{(\Omega R)_2}{(\Omega R)_1} \lambda_{i_2}$$

$$\lambda_2 = \mu_{z_2} + \lambda_{i_2} + \kappa_{21} \frac{(\Omega R)_2}{(\Omega R)_1} \lambda_{i_1}$$

Here κ_{12} and κ_{21} are the rotor-rotor aerodynamic interference factors. Separate values are used for the interference factors in hover and forward flight, with a linear variation from $\mu = 0.05$ to 0.10.

Similarly, the rotor-rotor interference is included in the uniform inflow perturbation. Recall from section 2.5 that the differential equation for the inflow dynamics of the isolated rotor is

$$\tau\dot{\lambda} + \lambda = \frac{\partial\lambda}{\partial L}\left(\gamma \frac{C_T}{\sigma a}\right)_{aero}$$

where $(\partial\lambda/\partial L)^{-1} = (2\gamma/\sigma a)(\lambda_o/\kappa_h^2 + \sqrt{\lambda_o^2/\kappa_h^4 + \mu^2/\kappa_f^2})$. With two rotors, the inflow perturbations at one is a combination of the influence of both rotors; hence the differential equations become

$$\tau_1\dot{\lambda}_{R_1} + \lambda_{R_1} = \left(\frac{\partial\lambda}{\partial L}\right)_1 \left(\gamma \frac{C_T}{\sigma a}\right)_1 + \kappa_{12} \frac{(\Omega R)_2}{(\Omega R)_1} \left(\frac{\partial\lambda}{\partial L}\right)_2 \left(\gamma \frac{C_T}{\sigma a}\right)_2$$

$$\tau_2\dot{\lambda}_{R_2} + \lambda_{R_2} = \left(\frac{\partial\lambda}{\partial L}\right)_2 \left(\gamma \frac{C_T}{\sigma a}\right)_2 + \kappa_{21} \frac{(\Omega R)_1}{(\Omega R)_2} \left(\frac{\partial\lambda}{\partial L}\right)_1 \left(\gamma \frac{C_T}{\sigma a}\right)_1$$

The interference factors κ_{12} and κ_{21} are the same as for the trim-induced velocity.

For the side-by-side or tilting proprotor aircraft configurations, lateral symmetry gives $\kappa_{12} = \kappa_{21} = \kappa$. Then the trim-induced velocity is $\lambda = \mu_z + (1 + \kappa)\lambda_i$. The differential equation for the inflow perturbation becomes

$$\tau\dot{\lambda} + \lambda = (1 + \kappa) \frac{\partial\lambda}{\partial L} \left(\gamma \frac{C_T}{\sigma a}\right)_{aero}$$

for symmetric dynamics and

$$\tau\dot{\lambda} + \lambda = (1 - \kappa) \frac{\partial\lambda}{\partial L} \left(\gamma \frac{C_T}{\sigma a}\right)_{aero}$$

for the antisymmetric dynamics of the aircraft.

9.2 Ground Effect

To account for the effect of the ground on the rotorcraft dynamics, it is necessary to correct the trim- and perturbation-induced velocities for the proximity of the ground plane. Based on reference 17, an approximate expression for the ratio of the induced velocities in and out of ground effect is

$$\frac{v_\infty}{v} = \frac{T}{T_\infty} = \frac{1}{1 - (4z_{eff})^{-2}}$$

Here $z_{eff} = z/\cos\varepsilon$, where z is the altitude of the rotor hub above ground level, normalized by the rotor radius, and ε is the angle between the ground and the rotor wake:

$$\cos\varepsilon = \frac{(\mu_x \vec{i}_S - \mu_y \vec{j}_S - \lambda \vec{k}_S) \cdot \vec{k}_E}{\sqrt{\mu_x^2 + \mu_y^2 + \lambda^2}}$$

which thus accounts for the effect of forward speed. Note that ground effect is essentially negligible for altitudes greater than the rotor diameter, or at forward speeds $\mu > 2(C_T/2)^{1/2}$. This expression compares well with test results, down to an altitude of about 1/2 rotor radius (see ref. 17). The trim-induced velocity in ground effect (before incorporating the rotor-rotor

interference) is thus

$$\lambda = \mu_z + \left(1 - \frac{\cos^2 \varepsilon}{16z^2}\right)\lambda_i$$

The effect of the ground on the inflow dynamics is to add a perturbation due to changes in the rotor height above the ground:

$$\tau\dot{\lambda} + \lambda = \frac{\partial\lambda}{\partial L}\left(\gamma \frac{C_T}{\sigma a}\right)_{aero} + \frac{\partial\lambda}{\partial z}\,\delta z$$

where, again based on the results in reference 17,

$$\frac{\partial\lambda}{\partial z} = \frac{\lambda_o \cos^2 \varepsilon}{8z^3}$$

(Actually, the ground-effect term is added to the equations for rotors 1 and 2, including the rotor-rotor interference terms, as in section 9.1.) The rotor height perturbation δz is due to the rigid body and elastic degrees of freedom of the airframe. The vertical component of the displacement at the rotor hub gives

$$\begin{aligned}
\delta z &= -\vec{k}_E \cdot (x_h\vec{i}_S + y_h\vec{j}_S + z_h\vec{k}_S) \\
&= \left(z_{hub} \cos \theta_{FT} \sin \phi_{FT} - y_{hub} \cos \theta_{FT} \cos \phi_{FT}\right)\phi_F \\
&\quad + \left[\left(z_{hub} \cos \phi_{FT} + y_{hub} \sin \phi_{FT}\right)\sin \theta_{FT} + x_{hub} \cos \theta_{FT}\right]\theta_F + (\sin \theta_{FT})x_F \\
&\quad + (-\cos \theta_{FT} \sin \phi_{FT})y_F + (-\cos \theta_{FT} \cos \phi_{FT})z_F + \sum_{k=7}^{\infty} \vec{\xi}_k \cdot \vec{k}_E q_{s_k}
\end{aligned}$$

Since $\partial\lambda/\partial z > 0$, ground effect introduces a positive spring to the rotorcraft height dynamics (z_F perturbations). A decrease in the rotor height above the ground produces a decrease in the induced velocity, hence a rotor thrust increase that acts as a spring against the vertical height change.

For the side-by-side helicopter configuration, the antisymmetric dynamics exhibit an unstable roll oscillation due to interaction of the rotor wake and the ground. Such behavior can be included in the ground effect model derived here by using a negative value for $\partial\lambda/\partial z$ (a negative roll spring), which must be obtained from experimental data.

9.3 Pitch/Mast-Bending Coupling

Flexibility between the rotor swashplate and hub will produce a blade pitch change due to elastic motion of the airframe. This coupling between

the rotor pitch and the mast-bending will be accounted for by introducing kinematic feedback terms of the following form:

$$\begin{pmatrix} \Delta\theta_{1C} \\ \Delta\theta_{1S} \end{pmatrix} = - \sum_{k=7}^{\infty} \begin{pmatrix} K_{MC_i} \\ K_{MS_i} \end{pmatrix} q_{s_i}$$

9.4 Transmission and Engine Dynamics Model

The rotor rotational speed degree of freedom can be an important factor in the rotorcraft flight dynamics. A model is required which accounts for the coupling of the two rotors through the flexible drive train, and for the engine damping and inertia. The throttle control of engine torque must also be introduced. Figure 14(a) is a schematic of the transmission-engine model used for the single main-rotor and tail-rotor, and the tandem main-rotor helicopter configurations. The two rotors are connected by a shaft, and the engine is geared to one rotor (rotor 1 in fig. 14(a)). The torsional flexibility of the drive train is represented by the rotor shaft springs K_{M_1} and K_{M_2}, the interconnect shaft spring K_I, and the engine shaft spring K_E. The transmission gear ratios are r_E (ratio of the engine speed to rotor 1 speed), and r_{I_1} and r_{I_2} (ratio of the interconnect shaft speed to rotor speed). Thus r_{I_1}/r_{I_2} is the ratio of the trim rotational speeds of rotors 2 and 1.

The degrees of freedom are the rotational speed perturbations of the two rotors ($\dot{\psi}_{s_1}$ and $\dot{\psi}_{s_2}$) and the engine speed perturbation ($\dot{\psi}_e$). The engine shaft azimuth perturbation ψ_e is defined relative to rotor 1 rotation, so the total engine speed perturbation with respect to space is $r_E(\dot{\psi}_{s_1} + \dot{\psi}_e)$. With coupling of the speeds of the two rotors by the drive system, it is more appropriate to use the degrees of freedom:

$$\psi_s = \psi_{s_1}$$

$$\psi_I = \psi_{s_2} - \left(r_{I_1}/r_{I_2}\right)\psi_{s_1}$$

Here ψ_I is the differential azimuth perturbation between the two rotors. The degrees of freedom ψ_I and ψ_e therefore involve elastic torsion in the drive train (in the interconnect shaft and engine shaft, respectively) and so represent high-frequency modes. The degree of freedom ψ_s is the rotational speed perturbation of the drive system as a whole — both rotors, the engine, and the transmission.

The engine model includes the inertia, damping, and control torques:

$$I_E\dot{\Omega}_E = Q_E - Q_\Omega\Omega_E + Q_t\theta_t$$

Here Ω_E is the engine speed and Q_E is the perturbation torque on the engine. The engine rotary inertia is I_E; Q_Ω is the engine speed damping coefficient, that is, the torque per unit speed change at constant throttle setting (see section 2.4). The variable θ_t is the engine throttle control position and Q_t is the torque applied due to a throttle change at constant speed:

$$Q_t = \left.\frac{\partial Q}{\partial \theta_t}\right|_{\Omega_E=\text{const}} = \left.\frac{1}{\Omega_E}\frac{\partial P_{\text{engine}}}{\partial \theta_t}\right|_{\Omega_E=\text{const}}$$

Thus Q_t and Q_Ω can be obtained from data on the engine power as a function of throttle position and engine speed.

The differential equations of motion for the rotor speed dynamics are obtained from equilibrium of the torques on the two rotors and the engine. The resulting equations for ψ_s, ψ_I, and ψ_e are

$$\left(\gamma\frac{C_Q}{\sigma a}\right)_1 + \frac{r_{I_1}}{r_{I_2}}\frac{(NI_b\Omega^2)_2}{(NI_b\Omega^2)_1}\left(\gamma\frac{C_Q}{\sigma a}\right)_2 + r_E^2 I_E^*(\ddot{\psi}_s + \ddot{\psi}_e) + r_E^2 Q_\Omega^*(\dot{\psi}_s + \dot{\psi}_e) = r_E Q_t^* \theta_t$$

$$-\frac{r_{I_1}}{r_{I_2}}\frac{K_{MI_z}}{K_{M_1}}\left(\gamma\frac{C_Q}{\sigma a}\right)_1 + \frac{(NI_b\Omega^2)_2}{(NI_b\Omega^2)_1}\left(\gamma\frac{C_Q}{\sigma a}\right)_2 + K_{MI_2}^*\psi_I = 0$$

$$r_E^2 I_E^*(\ddot{\psi}_e + \ddot{\psi}_s) + r_E^2 Q_\Omega^*(\dot{\psi}_e + \dot{\psi}_s) + K_{EM_2}^*\psi_e - K_{EI_2}^*\psi_I = r_E Q_t^* \theta_t$$

where

$$K_{MI_2} = \frac{K_{M_2} r_{I_2}^2 K_I}{K_{M_2} + r_{I_2}^2 K_I}$$

$$K_{EM_2} = \frac{r_E^2 K_E K_{MM}}{r_E^2 K_E\left(K_{M_2} + r_{I_2}^2 K_I\right) + K_{MM}}$$

$$K_{EI_2} = \frac{r_E^2 K_E r_{I_1} K_{M_2} r_{I_2} K_I}{r_E^2 K_E\left(K_{M_2} + r_{I_2}^2 K_I\right) + K_{MM}}$$

$$K_{MM} = K_{M_1}K_{M_2} + K_I\left(r_{I_2}^2 K_{M_1} + r_{I_1}^2 K_{M_2}\right)$$

The spring constants are normalized by dividing by $(NI_b\Omega^2)_1$; $I_E^* = I_E/(NI_b)$. An alternative configuration for the transmission is with the engine by rotor 2, instead of by rotor 1 as in figure 14(a). The equations of motion for that case are obtained simply by exchanging subscripts 1 and 2 in the

three equations above; note that the definitions of the degrees of freedom are then:

$$\psi_s = \psi_{s_2}$$

$$\psi_I = \psi_{s_1} - \left(r_{I_2}/r_{I_1}\right)\psi_{s_2}$$

The normalized damping and throttle coefficients may be written

$$r_E^2 Q_\Omega^* = \frac{r_E^2 Q_\Omega}{NI_b\Omega} \cong \kappa \frac{P_{rotor}}{NI_b\Omega^3}$$

and

$$r_E Q_t^* = \frac{r_E Q_t}{NI_b\Omega} = \frac{\partial P_{engine}/\partial\theta_t}{NI_b\Omega^3}$$

The approximate expression for Q_Ω^* is discussed in section 2.4.

The side-by-side or tilting proprotor aircraft requires a different transmission and engine model due to the lateral symmetry assumed for these configurations. Figure 14(b) is a schematic of the model considered. The two rotors are connected by a cross-shaft, and there are two engines, one geared to each rotor. The degrees of freedom are the rotor speed perturbation $\dot{\psi}_s$ and the engine speed perturbation $\dot{\psi}_e$ (defined relative to the rotor speed again). The equations of motion for ψ_s and ψ_e follow as above:

$$\gamma \frac{C_Q}{\sigma a} + K_{MR} r_E^2 I_E^* (\ddot{\psi}_s + \ddot{\psi}_e) + K_{MR} r_E^2 Q_\Omega^* (\dot{\psi}_s + \dot{\psi}_e) + K_{MI}^* \psi_s = K_{MR} r_E Q_t^* \theta_t$$

$$r_E^2 I_E^* (\ddot{\psi}_e + \ddot{\psi}_s) + r_E^2 Q_\Omega^* (\dot{\psi}_e + \dot{\psi}_s) + K_{EM}^* \psi_e + K_{EI}^* \psi_s = r_E Q_t^* \theta_t$$

where

$$K_{EM} = \frac{r_E^2 K_E (K_M + 2r_I^2 K_I)}{K_M + r_E^2 K_E + 2r_I^2 K_I}$$

$$K_{EI} = \frac{r_E^2 K_E 2r_I^2 K_I}{K_M + r_E^2 K_E + 2r_I^2 K_I}$$

$$K_{MI} = \frac{K_M 2r_I^2 K_I}{K_M + 2r_I^2 K_I}$$

$$K_{MR} = \frac{K_M}{K_M + 2r_I^2 K_I}$$

For antisymmetric motion, ψ_s is the differential azimuth perturbation between the two rotors, involving torsion in the interconnect shaft. For symmetric motions, there is no torque on the interconnect shaft, so the above equations apply with $K_I = 0$ (so $K_{MR} = 1$ and $K_{EI} = K_{MI} = 0$).

The case of a rotorcraft in autorotation can be treated with this model by dropping the ψ_e degree of freedom and dropping the engine terms from the ψ_s and ψ_I equations (helicopters usually have an overrunning clutch to disconnect the rotors from the engine at zero torque). The engine-out case (engine and rotors still connected) can be handled by dropping the engine damping term. The case of constant rotor speed is modeled by simply dropping the ψ_s, ψ_I, and ψ_e equations and degrees of freedom from the system. Generally, the ψ_I and ψ_e degrees of freedom are only involved with high-frequency dynamics, and so it is usually sufficient to consider the ψ_s degree of freedom for flight dynamics analyses.

9.5 Rotor Speed Governor

When the rotor rotational speed perturbation is included in the flight dynamics analysis, it is usually necessary to also include the rotor speed governor in the model for a consistent calculation of the aeroelastic behavior. The governor model considered is integral and proportional feedback of the engine speed to throttle and to the collective pitch of rotors 1 and 2. The control equations are then

$$\Delta\theta_t = K_{P_e}(\dot{\psi}_s + \dot{\psi}_e) + K_{I_e}(\psi_s + \psi_e)$$

$$(\Delta\theta_o)_{\text{rotor 1}} = K_{P_1}(\dot{\psi}_s + \dot{\psi}_e) + K_{I_1}(\psi_s + \psi_e)$$

$$(\Delta\theta_o)_{\text{rotor 2}} = K_{P_2}(\dot{\psi}_s + \dot{\psi}_e) + K_{I_2}(\psi_s + \psi_e)$$

Note that $\dot{\psi}_s$ is the rotor speed error and ψ_s then is the integral of the error. Since the governor dynamics are neglected, this model does not add degrees of freedom to the aeroelastic analysis.

10. COUPLED ROTOR AND BODY MODEL

The equations of motion have been derived for the two rotors and for the aircraft body. Now these equations may be combined to construct the set of linear differential equations that describes the dynamics of the complete rotorcraft system. The equations of motion for the coupled model then have the following form:

$$A_2\ddot{x} + A_1\dot{x} + A_0x = Bv + B_Pv_P + B_Gg$$

Here x is the vector of the degrees of freedom for the entire system, v is the vector of the individual control inputs, v_P is the vector of the pilot's control inputs, and g is the aerodynamic gust vector (in velocity axes).

$$A_2\ddot{x}_R + A_1\dot{x}_R + A_0x_R + \tilde{A}_2\ddot{\alpha} + \tilde{A}_1\dot{\alpha} + \tilde{A}_0\alpha = Bv_R + B_Gg_s$$

$$F = C_2\ddot{x}_R + C_1\dot{x}_R + C_0x_R + \tilde{C}_2\ddot{\alpha} + \tilde{C}_1\dot{\alpha} + \tilde{C}_0\alpha + D_Gg_s$$

for rotors 1 and 2 (see part I; in particular, section 2.6). Recall that the vector of rotor degrees of freedom x_R consists of the flap/lag bending, rigid pitch/elastic torsion, gimbal tilt, rotational speed, and inflow perturbation variables; the vector of the rotor controls v_R consists of the blade pitch control inputs; and the aerodynamic gust vector g_s is in the shaft axes for the rotor model:

$$x_R = \begin{bmatrix} \beta^{(k)} \\ \theta^{(k)} \\ \beta_{GC} \\ \beta_{GS} \\ \psi_s \\ \lambda \\ \lambda_x \\ \lambda_y \end{bmatrix} \qquad v_R = \begin{bmatrix} \theta^{con} \end{bmatrix} \qquad g_s = \begin{bmatrix} u_G \\ v_G \\ w_G \end{bmatrix}_s$$

As usual, α and F are, respectively, the hub motion and hub reaction in the shaft axes.

The equation of motion and the hub motion expressions from the aircraft model (section 8) are

$$a_2\ddot{x}_s + a_1\dot{x}_s + a_0x_s = bv_s + b_Gg_F + \tilde{a}F$$

$$\alpha = cx_s$$

$$\Delta\ddot{\alpha} = \bar{c}\dot{x}_s$$

where $\Delta\ddot{\alpha}$ is the linear acceleration due to the rotation of the velocity vector in body axes by the Euler angular velocity (section 8.1.2). The aircraft degree-of-freedom vector x_s consists of the rigid-body angular and linear variables, the antisymmetric and symmetric elastic free-vibration modes of the airframe, and the aerodynamic interference inflow variables; the vector of the control inputs v_s consists of the aircraft aerodynamic control-surface deflections; and the aerodynamic gust vector g_F is in the body axes for the aircraft model:

$$x_s = \begin{bmatrix} \phi_F \\ \theta_F \\ \psi_F \\ x_F \\ y_F \\ z_F \\ q_{s_k}\text{anti} \\ q_{s_k}\text{sym} \\ \lambda_w \\ \lambda_H \\ \lambda_v \end{bmatrix}, \quad v_s = \begin{bmatrix} \delta_f \\ \delta_e \\ \delta_a \\ \delta_r \end{bmatrix}, \quad g_F = \begin{bmatrix} u_G \\ v_G \\ w_G \end{bmatrix}_F$$

The gust components for the rotorcraft model must be in velocity axes; hence substitutions $g_S = R_G g$ and $g_F = R_{FV} g$ are required in the rotor and body equations (see section 7.1.3). The transmission and engine model (section 9.4) replaces the individual rotor speed perturbations $\dot{\psi}_{s_1}$ and $\dot{\psi}_{s_2}$ by the coupled degrees of freedom $\dot{\psi}_s$ and $\dot{\psi}_I$, introduces the engine speed degree of freedom $\dot{\psi}_e$, and adds the engine throttle control θ_t to the model. The pilot controls $v_P = (\delta_o \quad \delta_c \quad \delta_s \quad \delta_p \quad \delta_t)^T$ are related to the rotorcraft input vector v by a linear transformation $v = T_{CFE} v_P$ (see section 7.2). Then the state vector x, control vector v, and aerodynamic gust vector g for the complete rotorcraft model are

$$x = \begin{bmatrix} x_{R_1} \\ x_{R_2} \\ \psi_e \\ x_s \end{bmatrix}, \quad v = \begin{bmatrix} v_{R_1} \\ v_{R_2} \\ \theta_t \\ v_s \end{bmatrix}, \quad g = \begin{bmatrix} u_G \\ v_G \\ w_G \end{bmatrix}_V$$

The coupled equations of motion are obtained by substituting the hub motion into the rotor equations and hub reactions, and then the hub reactions into the body equations of motion. The resulting coefficient matrices for the coupled system are

$$A_2 = \left[\begin{array}{c|c} A_2 & \tilde{A}_2 C \\ \hline -\tilde{a}C_2 & a_2 - \tilde{a}\tilde{C}_2 c \end{array}\right]$$

$$A_1 = \left[\begin{array}{c|c} A_1 & \tilde{A}_1 c + \tilde{A}_2 \bar{c} \\ \hline -\tilde{a}C_1 & \begin{array}{c} a_1 - \tilde{a}\tilde{C}_1 c \\ - \tilde{a}\tilde{C}_2 \bar{c} \end{array} \end{array}\right]$$

$$A_0 = \left[\begin{array}{c|c} A_0 & \tilde{A}_0 c \\ \hline -\tilde{a}C_0 & a_0 - \tilde{a}\tilde{C}_0 c \end{array}\right]$$

$$B = \left[\begin{array}{c|c} B & 0 \\ \hline 0 & b \end{array}\right]$$

$$B_G = \left[\begin{array}{c} B_G R_G \\ \hline b_G R_{FV} + \tilde{a} D_G R_G \end{array}\right]$$

$$B_p = BT_{CFE}$$

In constructing these matrices, it is necessary to skip the angular hub motion (α_x, α_y, α_z) columns of $\tilde{A}_0$ and $\tilde{C}_0$ for the Euler angles (ϕ_F, θ_F, ψ_F) since body axes are used for the aircraft motion (see section 8.1.2). Also, the linear hub motion (x_h, y_h, z_h) columns of $\tilde{C}_2$ should be skipped for the body degrees of freedom, assuming that the rotor mass is already included in the aircraft gross weight and free-vibration generalized masses.

The rotorcraft equations of motion are normalized based on the parameters of rotor 1 (Ω, R, N, I_b, γ, σ, etc.). The equations for rotor 2 as derived are, however, based on the rotor 2 parameters. Therefore, it is necessary to multiply the coefficient matrices for the rotor 2 equations of motion and hub reactions by appropriate scale factors to account for the differences in normalization. The degrees of freedom and control variables for rotor 2 will

still be normalized based on rotor 2 parameters. Most are angular variables anyway, hence inherently dimensionless. The components of the hub motion, hub reaction, and gust are based on rotor 1 parameters, however: the linear hub displacements in α are based on R_1 not R_2; the gust velocities are based on $(\Omega R)_1$ not $(\Omega R)_2$; and the forces and moments in F are based on $(NI_b\Omega^2/R)_1$ and $(NI_b\Omega^2)_1$, respectively. Finally, the scale factors for the rotor 2 equations must account for the time scale of the complete system, which is based on the trim rotation speed of rotor 1.

The equations for the rotor inflow dynamics are completed by accounting for the rotor-rotor aerodynamic interference (section 9.1) and the effect of the ground (section 9.2). The equations for the airframe-rotor aerodynamic interference variables (λ_w, λ_H, λ_v) are completed after constructing the coupled equations of motion. Note that this aerodynamic interference is the only coupling of the rotor and body not taking place through the rotor hub. Pitch/mast-bending coupling is accounted for by adding terms for the elastic airframe degrees of freedom ($q_{s_k}, k \geqslant 7$) in the rotor rigid pitch equations (section 9.3). The rotor speed governor model is added to the system as described in section 9.5. Finally, the unused equations of motion and degrees of freedom may be eliminated from the model by deleting the appropriate rows and columns from the coefficient matrices.

10.1 Rigid Control System

A rigid control system model may be used for either or both rotors. In the limit of infinite control system stiffness, the equations of motion for the rotor rigid pitch degrees of freedom reduce to the algebraic relations:

$$\begin{pmatrix}\theta_o\\ \theta_{1C}\\ \theta_{1S}\end{pmatrix}_o = \begin{pmatrix}\theta_o\\ \theta_{1C}\\ \theta_{1S}\end{pmatrix}_{con} - \sum K_{P_i}\begin{pmatrix}\beta_o\\ \beta_{1C}\\ \beta_{1S}\end{pmatrix}_i - K_{P_G}\begin{pmatrix}0\\ \beta_{GC}\\ \beta_{GS}\end{pmatrix} + \begin{pmatrix}0\\ \theta_{1S}\\ -\theta_{1C}\end{pmatrix}\psi_s$$

$$- \sum_{k=7}^{\infty}\begin{pmatrix}0\\ K_{MC_k}\\ K_{MS_k}\end{pmatrix} q_{s_k}$$

(the result for the number of blades $N \neq 3$ is similar). On the basis of this equation, the matrices A_o and B are reconstructed as outlined in section 6.1.

10.2 Quasistatic Approximation

It is frequently possible to reduce the order of the system of equations describing the rotorcraft dynamics by considering a quasistatic approximation

for certain of the degrees of freedom. In the present analysis of the rotorcraft in flight, the quasistatic approximation is applicable to the inflow dynamics of either or both rotors, to the rotor-body aerodynamic interference variables, to the rigid pitch/elastic torsion degrees of freedom of either or both rotors, to all the degrees of freedom for rotor 1, rotor 2, or both rotors, or even to all degrees of freedom except the six rigid-body motions of the aircraft. The reduction of the model by eliminating the quasistatic variables is described in section 6.2.

The quasistatic rotor model is frequently useful, and often valid, in the analysis of rotorcraft flight dynamics. It is usually a satisfactory representation for the tail rotor and may also be satisfactory for the main rotor dynamics for such applications as low-rate stability and control augmentation system investigations. Generally, whether the quasistatic model is a satisfactory representation of the aeroelastic behavior must always be verified for a particular application of the analysis by comparison with the results of the higher order model.

10.3 Side-by-Side or Tilting Proprotor Configuration

The aeroelastic analysis for the side-by-side or tilting proprotor aircraft configuration requires special consideration. Assuming complete lateral symmetry of both the aircraft and the flight state, the symmetric and antisymmetric motions are entirely decoupled. Thus the analysis involves the solution of two problems of half the order of the whole system. The motions of the left and right sides of the aircraft are then given by, respectively, the sum and difference of the symmetric and antisymmetric degrees of freedom.

The symmetry of the flight state requires $\psi_{FP} = 0$ (no side velocity) and $\phi_{FT} = 0$ (zero trim roll angle). The trim solution has automatically $\delta_c = \delta_p = \phi_{FT} = 0$, so it is only necessary to solve three equations (vertical and longitudinal force, and pitch moment) for three trim variables (δ_o, δ_s, and θ_{FT}). The construction of the coupled differential equations of motion follows basically the steps outlined above for the general two-rotor helicopter. It is also necessary to obtain the equations of motion for one rotor, however, multiplying the hub reactions by a factor of 2 to account for both rotors of the aircraft (the renormalization for rotor 2 is not required since the two rotors are identical in this case).

10.4 Two-Bladed Rotor Case

The two-bladed rotor has special dynamic characteristics compared with the case of three or more blades. Generally, the dynamic behavior is described by periodic coefficient differential equations, so a Floquet analysis is required except for special cases (such as a shaft-fixed rotor in axial flow; see section 4.2). For helicopter flight dynamics, the main concern is with the low-frequency impedance of the rotor hub reaction response to shaft motion, control inputs, and gusts.

The impedance of a linear time-invariant (constant coefficient) dynamic system is described by a transfer function $H(\omega)$:

$$\bar{F} = H(\omega)\bar{\alpha}$$

that relates the magnitude and phase of the input and output at frequency ω. The implication of the periodic coefficients of the two-bladed rotor is that such a transfer function relation does not exist, for an input at frequency ω generally produces a response at all frequencies $\omega \pm n\Omega$, $n = 0, \ldots, \infty$. Then the input-output relation takes the form:

$$F = \left[\sum_{n=-\infty}^{\infty} H_n(\omega)e^{in\Omega t}\right]\bar{\alpha}\, e^{i\omega t}$$

The flap or teetering response of the two-bladed rotor is found to be primarily at frequencies $\omega \pm \Omega$. It follows that the low-frequency flap response is at $\pm\Omega$, so the low-frequency motion can be written:

$$\beta = \beta_{1C} \cos\psi + \beta_{1S} \sin\psi$$

It is found that the solution for the β_{1C} and β_{1S} flap motion is identical to that for the rotor with $N \geqslant 3$ at low frequency. Furthermore, it is found that the average of the coefficients of the hub reactions at low frequency is the same for the two-bladed rotor as for $N \geqslant 3$. But while this constant coefficient result is exact for a rotor with three or more blades in hover, due to the rotor inertial and aerodynamic axisymmetry, for the two-bladed rotor there really are periodic coefficients in the hub reactions. Specifically, there is a large 2/rev variation of the coefficients even in hover due to the rotor asymmetry when $N = 2$.

Difficulties also arise with the quasistatic approximation. As implemented in section 6.2, the velocity and acceleration terms in an equation are dropped, reducing that equation to an algebraic substitution relation for the quasistatic variable. For a rotor with three or more blades, the quasistatic approximation applied to the equations in the nonrotating frame produces exactly the low-frequency response of the rotor. Note that it is necessary to consider both the β_{1C} and β_{1S} equations even when only longitudinal or lateral dynamics of the helicopter are involved, for the β_{1S} and vice versa. For the two-bladed rotor, however, the quasistatic approximation does not give the low-frequency response because the β_1 equation is really in the rotating frame.

In summary, the two-bladed rotor is indeed a special case. First, the description of the dynamics is unique, involving the teetering degree of freedom β_1, which is fundamentally in the rotating frame, rather than the cyclic degrees of freedom β_{1C} and β_{1S}. The frequency response is not given by the common transfer function relation because the system is not time invariant. The low-frequency flap response does reduce to a tip-path-plane representation, identical to the result for $N \geqslant 3$; but the $\omega = 0$ limit,

which allows the $\beta_1 = \beta_{1C} \cos \psi + \beta_{1S} \sin \psi$ representation, is a special case.

Second, the equation of motion for the helicopter flight dynamics, while the same as for $N \geqslant 3$ if the averaged coefficients are used, in fact involves large-amplitude periodic coefficients even for the low-frequency response of the hovering rotor. There is a 2/rev variation of the coefficients due to the lack of axisymmetry of the two-bladed rotor. For $\nu = 1$ (no flap hub spring), the effect is mainly on the helicopter pitch and roll damping and cross-coupling.

Third, the quasistatic approximation as implemented here, when applied to the two-bladed rotor, does not give the low-frequency response as it does for $N \geqslant 3$. The source of the difficulty is the fact that the β_1 equation of motion is in the rotating frame still, so the β_1 response to low-frequency inputs from the nonrotating frame is not at low-frequency also, but rather at 1/rev.

The special characteristics of the two-bladed rotor dynamics pose a number of problems for the analysis of the aeroelastic behavior. Generally, it is necessary to use the Floquet analysis of the periodic coefficient equations more often than for a rotor with three or more blades. In fact, it is not possible to use directly the constant coefficient approximation (section 3.2) for flight dynamics since that eliminates the coupling of the rotor and the shaft motion. The quasistatic rotor model is very useful for helicopter flight dynamics investigations, for $N = 2$ as well as $N \geqslant 3$. Some procedure other than that of section 6.2 is required, however, to obtain the quasistatic representation of the two-bladed rotor. The simplest procedure is to use an equivalent $N \geqslant 3$ model for the rotor. Then the quasistatic approximation gives the desired low-frequency, constant-coefficient response of the actual two-bladed rotor. For the teetering rotor helicopter, a three-bladed gimballed rotor is a good choice for the equivalent model. The fundamental parameters of the rotor (γ, σ, etc.) must be maintained; hence the equivalent rotor will have a chord and mass distribution sealed by a factor $2/N_{equiv}$. A frequent use of such an equivalent model would be to represent a two-bladed tail rotor.

The validity of these approximate analyses of the two-bladed rotor — the constant coefficient approximation and the equivalent rotor representation — must always be verified for a particular application, of course. While some useful range of validity may always be expected, eventually the periodic coefficients or high-frequency dynamics become important enough to require a more rigorous analysis.

11. CONCLUDING REMARKS

11.1 Applications of the Analysis

The aeroelastic analysis developed here has been applied in a number of investigations of rotorcraft dynamics, both to check the basic features of the analysis and to obtain information about the dynamic behavior of specific rotors and aircraft. References 18 and 21 present some results of these investigations. In reference 18, results are given for a number of classical problems of shaft-fixed rotor dynamics. The flapping frequency response to pitch control inputs is presented, including an examination of the influence of the rotor inflow dynamics for articulated and hingeless rotors. A root locus of the flapping stability of an articulated rotor in forward flight is given, including the influence of the periodic aerodynamic coefficients at high advance ratio. Thirdly, reference 18 presents flutter and divergence stability boundaries for an articulated rotor in hover. The influence of the offset between the center of gravity and the aerodynamic center, of the first bending mode, and of forward flight on the flutter boundary is examined.

The rotor and wind-tunnel support aeroelastic analysis has been applied to several configurations. A number of calculations have been made of the ground resonance stability of articulated rotors on a test module, strut, and balance frame system; reference 18 presents typical results, including a comparison with an elementary stability criterion. Reference 19 gives the aeroelastic stability calculations for gimballed and hingeless proprotors on a cantilever wing. The proprotor and cantilever wing model has also been used in an investigation of optimal control designs for gust alleviation (ref. 20). Finally, reference 21 presents the predicted dynamic stability for a tilting proprotor aircraft in a wind tunnel, including the airframe, strut, and balance dynamics.

The rotorcraft in flight aeroelastic analysis has been used in reference 18 to calculate the flight dynamics of four representative helicopters: a small articulated rotor helicopter, a large articulated rotor helicopter, a soft-inplane hingeless rotor helicopter, and a tandem rotor helicopter. The results include an examination of the influence on the flight dynamics of the quasistatic rotor model, the rotor lag motion and other degrees of freedom, the rotor inflow dynamics, and coupled lateral and longitudinal aircraft motion. Finally, reference 21 presents the predicted dynamic characteristics of a tilting proprotor aircraft in flight, including trim conditions, flight dynamics, gust response, aeroelastic stability, and wing response to control inputs.

11.2 Future Development

An aeroelastic analysis for a rotorcraft in flight or in a wind tunnel has been developed, in which the dynamic behavior is described by a set of linear differential equations. From these equations, the dynamic stability, flight dynamics, and aeroelastic response of the system may be calculated, and

they form the basis for more extensive investigations such as automatic control-system design. It is not possible to anticipate all features that will be required to model future rotor designs, so it must be expected that new applications will often require further development of the model, sometimes by minor extensions and sometimes by major ones. Thus, in addition to its current use in investigations of rotor dynamics, the present analysis also provides the basis for the continuing development of models for rotorcraft aeroelastic behavior.

APPENDIX A. ROTOR INERTIAL AND AERODYNAMIC COEFFICIENTS

A1. ROTOR INERTIAL COEFFICIENTS

The inertial coefficients required for the rotor equations of motion (see section 2.2) are

$$M_b^* = \int_o^1 m\, dr/I_b$$

$$S_{q_i}^* = \int_o^1 \vec{\eta}_i m\, dr/I_b$$

$$I_o^* = \int_o^1 r^2 m\, dr/I_b$$

$$I_{q_i\alpha}^* = \int_o^1 \vec{\eta}_i r m\, dr/I_b$$

$$S_{p_i\alpha}^* = \frac{1}{I_b}\int_{r_{FA}}^1 \Big\{\xi_i\left(x_o\vec{i} + z_o\vec{k} + x_I\vec{i}\right) + \xi_i(r_{FA})\Big[\left(\delta_{FA_3} - \delta_{FA_5}\right)\vec{i}_B - \left(\delta_{FA_2} - \delta_{FA_4}\right)\vec{k}_B\Big](r - r_{FA})\Big\} rm\, dr$$

$$I_{\dot{q}_i\alpha}^* = \frac{1}{I_b}\int_o^1 \vec{k}_B \cdot \vec{\eta}_i\Big[-z_{FA} + r\delta_{FA_1} - (r - r_{FA})\delta_{FA_2} + r\beta_G + \vec{i}_B \cdot (z_o\vec{i} - x_o\vec{k} - x_I\vec{k})\Big] m\, dr$$

$$I_{\dot{q}_o\alpha}^* = \frac{1}{I_b}\int_o^1 r\Big[-z_{FA} + r\delta_{FA_1} - (r - r_{FA})\delta_{FA_2} + r\beta_G + \vec{i}_B \cdot (z_o\vec{i} - x_o\vec{k} - x_I k)\Big] m\, dr$$

$$I_{\dot{q}_i\psi}^* = \frac{1}{I_b}\Big\{\int_o^1 rm \int_o^r \vec{\eta}_i' \cdot (z_o\vec{i} - x_o\vec{k} - x_I\vec{k})' d\rho\, dr + \int_o^1 \vec{i}_B \cdot \vec{\eta}_i\Big[r\delta_{FA_1} - (r - r_{FA})\delta_{FA_2} + r\beta_G\Big] m\, dr - \int_o^1 \vec{k}_B \cdot \vec{\eta}_i\Big[x_{FA} + r_{FA}\delta_{FA_3} + z_{FA}\theta_G + \vec{k}_B \cdot (z_o\vec{i} - x_o\vec{k} - x_I\vec{k})\Big] m\, dr\Big\}$$

$$I_{q_k}^* = \int_o^1 \eta_k^2\, m\, dr/I_b$$

$$S^*_{q_k\ddot{p}_i} = \frac{1}{I_b}\int_0^1 \vec{\eta}_k \cdot \Big\{\xi_i(x_o\vec{i} + z_o\vec{k} + x_I\vec{i})$$

$$- \xi_i(r_{FA})\Big[\big(\delta_{FA_2} - \delta_{FA_4}\big)\vec{k}_B$$

$$- \big(\delta_{FA_3} - \delta_{FA_5}\big)\vec{i}_B\Big](r - r_{FA})\Big\} m\, dr$$

$$S^*_{q_k p_i} = \frac{1}{I_b}\Big[\int_{r_{FA}}^1 \vec{\eta}_k \cdot \Big(-\Big\{[\xi_i(x_o\vec{i} + z_o\vec{k} + x_I\vec{i})]' \int_r^1 \rho m\, d\rho\Big\}'$$

$$+ [(x_C - x_I)\xi_i\vec{i} rm]'$$

$$- m\vec{k}_B\xi_i\vec{k}_B \cdot (x_o\vec{i} + z_o\vec{k} + x_I\vec{i})$$

$$+ \xi_i(r_{FA})m\Big[r\big(\delta_{FA_3} - \delta_{FA_5}\big)\vec{i}_B$$

$$- r_{FA}\big(\delta_{FA_2} - \delta_{FA_4}\big)\vec{k}_B\Big]\Big) dr$$

$$- \vec{\eta}_k(r_{FA}) \cdot \Big[\big(\delta_{FA_3} - \delta_{FA_5}\big)\vec{i}_B$$

$$- \big(\delta_{FA_2} - \delta_{FA_4}\big)\vec{k}_B\Big]\xi_i(r_{FA})\int_{r_{FA}}^1 rm\, dr$$

$$- \int_{r_{FA}}^1 \vec{\eta}_k \cdot \Big[\big(EI_{XP}\vec{k} - EI_{ZP}\vec{i}\big)\theta'_{tw}\xi_i'\Big]''\, dr\Big]$$

$$I^*_{q_k\dot{q}_i} = \frac{1}{I_b}\Big[-\int_0^1 \vec{\eta}_k \cdot \vec{k}_B m \int_0^r \vec{\eta}_i' \cdot (z_o\vec{i} - x_o\vec{k} - x_I\vec{k})' d\rho\, dr$$

$$+ \int_0^1 \vec{\eta}_i \cdot \vec{k}_B m \int_0^r \vec{\eta}_k' \cdot (z_o\vec{i} - x_o\vec{k} - x_C\vec{k})' d\rho\, dr$$

$$- \int_0^1 \vec{\eta}_k \cdot \Big\{\big[(x_C - x_I)\vec{k} m\vec{k}_B \cdot \vec{\eta}_i\big]'$$

$$- m\big(\delta_{FA_1} - \delta_{FA_2} + \beta_G\big)\vec{j}\times\vec{\eta}_i\Big\} dr$$

$$+ \vec{\eta}_k(r_{FA}) \cdot \big(\delta_{FA_2}\vec{i}_B + \delta_{FA_3}\vec{k}_B\big)\int_{r_{FA}}^1 \vec{k}_B \cdot \vec{\eta}_i m\, dr\Big]$$

$$I^*_{q_k\dot{\psi}} = \frac{1}{I_b}\Bigg(\int_o^1 rm\int_o^r \vec{\eta}_k' \cdot (z_o\vec{i} - x_o\vec{k} - x_C\vec{k})'d\rho\ dr$$

$$- \int_o^1 \vec{\eta}_k \cdot \vec{k}_B\Big[x_{FA} + r_{FA}\delta_{FA_3} + z_{FA}\theta_G$$

$$+ \vec{k}_B \cdot (z_o\vec{i} - x_o\vec{k} - x_I\vec{k})\Big] m\ dr$$

$$- \int_o^1 \vec{\eta}_k \cdot \Big\{\big[(x_C - x_I)\vec{k}rm\big]'$$

$$- m\big(\delta_{FA_1} - \delta_{FA_2} + \beta_G\big)\vec{i}_B r\Big\}\ dr$$

$$+ \vec{\eta}_k(r_{FA}) \cdot \Big(\delta_{FA_2}\vec{i}_B + \delta_{FA_3}\vec{k}_B\Big)\int_{r_{FA}}^1 rm\ dr\Bigg)$$

$$I^*_{q_k o} = \frac{1}{I_b}\Bigg(-\int_o^1 \vec{\eta}_k \cdot \Big\{\big[(x_C\vec{k})'\int_r^1 \rho m\ d\rho\big]' + \big[(x_I - x_C)\vec{k}mr\big]'$$

$$+ m\vec{i}_B r\big(\delta_{FA_1} - \delta_{FA_2}\big) - m\vec{k}_B\big(x_{FA} + r_{FA}\delta_{FA_3} - x_I\cos\theta\big)\Big\}dr$$

$$- \vec{\eta}_k(r_{FA}) \cdot \Big(\delta_{FA_2}\vec{i}_B + \delta_{FA_3}\vec{k}_B\Big)\int_{r_{FA}}^1 rm\ dr\Bigg)$$

$$I^*_{p_k} = \int_{r_{FA}}^1 \xi_k^2 I_\theta\ dr/I_b$$

$$S^*_{p_k} = \int_{r_{FA}}^1 \vec{X}_k m\ dr/I_b$$

$$I^*_{p_k\alpha} = \int_{r_{FA}}^1 \vec{X}_k rm\ dr/I_b$$

$$S^*_{p_k\ddot{\alpha}} = \frac{1}{I_b}\int_{r_{FA}}^1 \vec{X}_k \cdot \vec{i}_B\Big[-z_{FA} + r\delta_{FA_1} - (r - r_{FA})\delta_{FA_2} + r\beta_G$$

$$+ \vec{i}_B \cdot (z_o\vec{i} - x_o\vec{k} - x_I\vec{k})\Big] m\ dr$$

$$S^*_{p_k\ddot{q}_i} = \frac{1}{I_b}\int_{r_{FA}}^1 \vec{X}_k \cdot (-\vec{j}\times\vec{\eta}_i)m\ dr$$

$$I^*_{p_k p_i} = \frac{1}{I_b}\Bigg(-\int_{r_{FA}}^{1} \xi_i\Big[\vec{X}_k \cdot (z_o\vec{i} - x_o\vec{k} - x_I\vec{k}) + \xi_k x_I^2\Big]m\,dr$$

$$+\int_{r_{FA}}^{1} \vec{X}_k \cdot \Big[\big(\delta_{FA_2} - \delta_{FA_4}\big)\vec{i}_B$$

$$+ \big(\delta_{FA_3} - \delta_{FA_5}\big)\vec{k}_B\Big](r - r_{FA})\xi_i(r_{FA})m\,dr$$

$$+\int_{r_{FA}}^{1} \Big\{\big[\xi_k - \xi_k(r_{FA})\big]\xi_i(r_{FA})$$

$$+ \big[\xi_i - \xi_i(r_{FA})\big]\xi_k(r_{FA})\Big\}I_\theta\,dr\Bigg)$$

$$I^*_{p_k p_i} = \frac{1}{I_b}\Bigg\{\int_{r_{FA}}^{1} \xi_k\xi_i I_\theta(\cos^2\theta - \sin^2\theta)dr$$

$$- \int_{r_{FA}}^{1} \big[\xi_k - \xi_k(r_{FA})\big]\Big[\Big(k_p^2\int_r^1 \rho m\,d\rho$$

$$+ \theta'^2_{tw}\,EI_{PP}\Big)\xi_i'\Big]'\,dr\Bigg\}$$

$$S^*_{p_k o} = I^*_{p_o}\omega_o^2\xi_k(r_{FA})$$

$$S^*_{p_k q_i} = \frac{1}{I_b}\Bigg\{\int_{r_{FA}}^{1} \vec{X}_k \cdot \vec{k}_B\vec{i}_B \cdot \vec{\eta}_i m\,dr + \int_{r_{FA}}^{1} \xi_k x_I m\vec{i} \cdot (\vec{\eta}_i' r - \vec{\eta}_i)dr$$

$$+ \int_{r_{FA}}^{1} \xi_k(x_o\vec{i} + z_o\vec{k})'' \cdot \int_r^1 \big[r\vec{\eta}_i - \rho\vec{\eta}_i(r)\big]\,m\,d\rho\,dr$$

$$-\int_{r_{FA}}^{1} \xi_k\vec{\eta}_i'' \int_r^1 \Big[r\vec{i}_B\vec{i}_B \cdot (x_o\vec{i} + z_o\vec{k} + x_I\vec{i})$$

$$+ \rho\vec{k}_B\vec{k}_B \cdot (x_o\vec{i} + z_o\vec{k} + x_I\vec{i}) - \rho(x_o\vec{i} + z_o\vec{k})\Big|_r$$

$$+ (\rho - r)\vec{i}_B\big(x_{FA} + r_{FA}\delta_{FA_3} + z_{FA}\theta_G\big) + (\rho - r)\vec{k}_B\rho\big(\delta_{FA_1} - \delta_{FA_2} + \beta_G\big)\Big]m\,d\rho\,dr$$

$$+\int_{r_{FA}}^{1} \xi_k\Big[\theta'_{tw}\big(EI_{XP}\vec{k} - EI_{ZP}\vec{i}\big) \cdot \vec{\eta}_i''\Big]'\,dr\Bigg\}$$

$$
\begin{aligned}
S^*_{p_o q_i} = \frac{1}{I_b}\Bigg(&\int_{r_{FA}}^{1} \vec{X}_o \cdot \vec{k}_B \vec{i}_B \cdot \vec{\eta}_i m \, dr \\
&+ \int_{r_{FA}}^{1} [\vec{\eta}_i - r\vec{\eta}_i'(r_{FA})] \cdot \Big\{ -\vec{k}_B \vec{k}_B \cdot (x_o \vec{i} + z_o \vec{k} + x_I \vec{i}) \\
&+ (x_o \vec{i} + z_o \vec{k})\Big|_{r_{FA}} - r_{FA}(x_o \vec{i} + z_o \vec{k})'\Big|_{r_{FA}} \\
&- \vec{i}_B\left(x_{FA} + r_{FA}\delta_{FA_3} + z_{FA}\theta_G\right) - \vec{k}_B r\left(\delta_{FA_1} - \delta_{FA_2} + \beta_G\right) \\
&+ r_{FA}\Big[\left(\delta_{FA_3} - \delta_{FA_5}\right)\vec{i}_B - \left(\delta_{FA_2} - \delta_{FA_4}\right)\vec{k}_B\Big]\Big\} m \, dr \\
&+ \int_{r_{FA}}^{1} (\vec{\eta}_i - r\vec{\eta}_i')\Big|_{r_{FA}} \cdot \Big[-\vec{i}_B \vec{i}_B \cdot (x_o \vec{i} + z_o \vec{k} + x_I \vec{i}) \\
&+ r(x_o \vec{i} + z_o \vec{k})'\Big|_{r_{FA}} + r\left(\delta_{FA_5}\vec{i}_B - \delta_{FA_4}\vec{k}_B\right) \\
&+ \vec{i}_B\left(x_{FA} + r_{FA}\delta_{FA_3} + z_{FA}\theta_G\right) + \vec{k}_B r\left(\delta_{FA_1} - \delta_{FA_2} + \beta_G\right)\Big] m \, dr \\
&+ \vec{\eta}_i'(r_{FA}) \cdot \left(\delta_{FA_3}\vec{i}_B - \delta_{FA_2}\vec{k}_B\right) \int_{r_{FA}}^{1} r r_{FA} m \, dr \\
&- K_{p_i} \omega_o^2 I_{p_o}\Bigg)
\end{aligned}
$$

where, for elastic torsion ($k \geq 1$),

$$
\vec{X}_k = \xi_k x_I \vec{k} - \int_{r_{FA}}^{r} \xi_k (z_o \vec{i} - x_o \vec{k})''(r - \rho) d\rho
$$

and for rigid pitch (k = 0)r,

$$\vec{X}_o = -(z_o\vec{i} - x_o\vec{k} - x_I\vec{k})$$
$$+ \left[\left(\delta_{FA_2} - \delta_{FA_4}\right)\vec{i}_B + \left(\delta_{FA_3} - \delta_{FA_5}\right)\vec{k}_B\right](r - r_{FA})$$
$$+ (z_o\vec{i} - x_o\vec{k})\Big|_{r_{FA}} + (z_o\vec{i} - x_o\vec{k})'\Big|_{r_{FA}}(r - r_{FA})$$

A2. ROTOR AERODYNAMIC COEFFICIENTS

The aerodynamic coefficients required for the rotor equations of motion (see section 2.3) are as follows. Recall that these coefficients are constant for axial flow, but are periodic functions of ψ_m for nonaxial flow. The coefficients for blade bending are

$$M_{q_k o} = \int_o^1 \vec{\eta}_k \cdot \left(\frac{F_z}{ac}\vec{i}_B - \frac{F_x}{ac}\vec{k}_B\right)dr$$

$$M_{q_k \mu} = \int_o^1 \vec{\eta}_k \cdot \left(F_{z_T}\vec{i}_B - F_{x_T}\vec{k}_B\right)dr$$

$$M_{q_k \dot{\zeta}} = \int_o^1 \vec{\eta}_k \cdot \left(F_{z_T}\vec{i}_B - F_{x_T}\vec{k}_B\right)r\ dr$$

$$M_{q_k \zeta} = \mu \cos \psi_m M_{q_k \mu}$$

$$M_{q_k \lambda} = \int_o^1 \vec{\eta}_k \cdot \left(F_{z_p}\vec{i}_B - F_{x_p}\vec{k}_B\right)dr$$

$$M_{q_k \dot{\beta}} = \int_o^1 \vec{\eta}_k \cdot \left(F_{z_p}\vec{i}_B - F_{x_p}\vec{k}_B\right)r\ dr$$

$$M_{q_k \beta} = \mu \cos \psi_m M_{q_k \lambda}$$

$$M_{q_k \dot{q}_i} = \int_o^1 \vec{\eta}_k \cdot \left(F_{z_T}\vec{i}_B - F_{x_T}\vec{k}_B\right)\vec{k}_B \cdot \vec{\eta}_i\ dr$$
$$+ \int_o^1 \vec{\eta}_k \cdot \left(F_{z_p}\vec{i}_B - F_{x_p}\vec{k}_B\right)\vec{i}_B \cdot \vec{\eta}_i\ dr$$

$$M_{q_k q_i} = \mu \cos \psi_m \left[\int_o^1 \vec{\eta}_k \cdot \left(F_{z_T}\vec{i}_B - F_{x_T}\vec{k}_B\right)\vec{k}_B \cdot \vec{\eta}_i'\ dr\right.$$
$$\left. + \int_o^1 \vec{\eta}_k \cdot \left(F_{z_p}\vec{i}_B - F_{x_p}\vec{k}_B\right)\vec{i}_B \cdot \vec{\eta}_i'\ dr\right]$$

$$M_{q_k p_i} = \int_o^1 \vec{\eta}_k \cdot \left(F_{z_\theta}\vec{i}_B - F_{x_\theta}\vec{k}_B\right)\xi_i\ dr$$

The aerodynamic coefficients for the flap moment are

$$M_\mu = \int_0^1 F_{z_T} r \, dr$$

$$M_{\dot{\zeta}} = \int_0^1 F_{z_T} r^2 \, dr$$

$$M_\zeta = \mu \cos \psi_m M_\mu$$

$$M_\lambda = \int_0^1 F_{z_p} r \, dr$$

$$M_{\dot{\beta}} = \int_0^1 F_{z_p} r^2 \, dr$$

$$M_\beta = \mu \cos \psi_m M_\lambda$$

$$M_{\dot{q}_i} = \int_0^1 \left(F_{z_T} \vec{k}_B \cdot \vec{\eta}_i + F_{z_p} \vec{i}_B \cdot \vec{\eta}_i \right) r \, dr$$

$$M_{q_i} = \mu \cos \psi_m \int_0^1 \left(F_{z_T} \vec{k}_B \cdot \vec{\eta}_i' + F_{z_p} \vec{i}_B \cdot \vec{\eta}_i' \right) r \, dr$$

$$M_{p_i} = \int_0^1 F_{z_\theta} \xi_i r \, dr$$

The aerodynamic coefficients for the other hub forces and moments follow the pattern of the flap moment, with the following changes in the notation and integrands:

	Integrand	Coefficient
Flap moment	rF_z	M
Torque	rF_x	Q
Blade drag force	F_x	H
Thrust	F_z	T

The radial force coefficients are

$$R_\mu = \int_0^1 F_{r_R} \, dr$$

$$R_r = \int_0^1 \tilde{F}_{r_T} \, dr$$

$$R_{\dot{\zeta}} = \int_0^1 \tilde{F}_{r_T} r \, dr$$

$$R_{\zeta} = \mu \cos \psi_m R_r - \mu \sin \psi_m R_\mu - \int_0^1 \frac{F_x}{ac} dr$$

$$R_{\lambda} = \int_0^1 \tilde{F}_{r_P} \, dr$$

$$R_{\dot{\beta}} = \int_0^1 \tilde{F}_{r_P} r \, dr$$

$$R_{\beta} = \mu \cos \psi_m R_\lambda - \lambda R_\mu - \int_0^1 \frac{F_z}{ac} dr$$

$$R_{\dot{q}_i} = \int_0^1 \left(\tilde{F}_{r_T} \vec{k}_B \cdot \vec{\eta}_i + \tilde{F}_{r_P} \vec{i}_B \cdot \vec{\eta}_i \right) dr$$

$$R_{q_i} = \mu \cos \psi_m \int_0^1 \left(\tilde{F}_{r_T} \vec{k}_B \cdot \vec{\eta}_i' + \tilde{F}_{r_P} \vec{i}_B \cdot \vec{\eta}_i' \right) dr$$

$$+ \int_0^1 F_{r_R} \left[\vec{k}_B \cdot \left(\vec{\eta}_i - r\vec{\eta}_i' - \mu \sin \psi_m \vec{\eta}_i' \right) - \lambda \vec{i}_B \cdot \vec{\eta}_i' \right] dr$$

$$- \int_0^1 \left(\frac{F_z}{ac} \vec{i}_B \cdot \vec{\eta}_i' + \frac{F_x}{ac} \vec{k}_B \cdot \vec{\eta}_i' \right) dr$$

$$R_{p_i} = \int_0^1 \tilde{F}_{r_\theta} \xi_i \, dr$$

where

$$\tilde{F}_{r_T} = F_{r_T} - F_{z_T} \left[\beta_G + \delta_{FA_1} - \delta_{FA_2} + \vec{k}_B \cdot (x_o \vec{i} + z_o \vec{k})' \right]$$

$$- F_{x_T} \left[\delta_{FA_3} + \vec{i}_B \cdot (x_o \vec{i} + z_o \vec{k})' \right]$$

and $\tilde{F}_{r_P}$ and $\tilde{F}_{r_\theta}$ are similarly defined. Finally, the aerodynamic coefficients for the blade pitch and torsion are

$$M_{p_k \mu} = \int_{r_{FA}}^1 \left[\xi_k M_{a_T} - \left(F_{x_T} \vec{i}_B + F_{z_T} \vec{k}_B \right) \cdot \vec{X}_{A_k} \right] dr$$

$$M_{p_k\dot{\zeta}} = \int_{r_{FA}}^{1} \left[\xi_k M_{a_T} - \left(F_{x_T}\vec{i}_B + F_{z_T}\vec{k}_B\right) \cdot \vec{X}_{A_k}\right] r\, dr$$

$$- \int_{r_{FA}}^{1} \xi_k \frac{c^2}{32}\left(1 + 4\frac{x_{A_e}}{c}\right) 2u_R \sin\theta \ \mathrm{sign}(V) \frac{c}{c_m}\, dr$$

$$M_{p_k\zeta} = \mu \cos\psi_m M_{p_k\mu}$$

$$+ \int_{r_{FA}}^{1} \xi_k \frac{c^2}{32}\left(1 + 4\frac{x_{A_e}}{c}\right)\mu \sin\psi_m \sin\theta \ \mathrm{sign}(V) \frac{c}{c_m}\, dr$$

$$M_{p_k\lambda} = \int_{r_{FA}}^{1} \left[\xi_k M_{a_p} - \left(F_{x_p}\vec{i}_B + F_{z_p}\vec{k}_B\right) \cdot \vec{X}_{A_k}\right] dr$$

$$M_{p_k\dot{\beta}} = \int_{r_{FA}}^{1} \left[\xi_k M_{a_p} - \left(F_{x_p}\vec{i}_B + F_{z_p}\vec{k}_B\right) \cdot \vec{X}_{A_k}\right] r\, dr$$

$$+ \int_{r_{FA}}^{1} \xi_k \frac{c^2}{32}\left(1 + 4\frac{x_{A_e}}{c}\right) 2u_R \cos\theta \ \mathrm{sign}(V) \frac{c}{c_m}\, dr$$

$$M_{p_k\beta} = \mu \cos\psi_m M_{p_k\lambda}$$

$$- \int_{r_{FA}}^{1} \xi_k \frac{c^2}{32} |V| \left[1 + 8\frac{x_{A_e}}{c} + 16\left(\frac{x_{A_e}}{c}\right)^2\right] \frac{c}{c_m}\, dr$$

$$- \int_{r_{FA}}^{1} \xi_k \frac{c^2}{32}\left(1 + 4\frac{x_{A_e}}{c}\right)\mu \sin\psi_m \cos\theta \ \mathrm{sign}(V) \frac{c}{c_m}\, dr$$

$$M_{p_k\dot{q}_i} = \int_{r_{FA}}^{1} \left[\xi_k M_{a_T} - \left(F_{x_T}\vec{i}_B + F_{z_T}\vec{k}_B\right) \cdot \vec{X}_{A_k}\right] \vec{k}_B \cdot \vec{\eta}_i\, dr$$

$$+ \int_{r_{FA}}^{1} \left[\xi_k M_{a_p} - \left(F_{x_p}\vec{i}_B + F_{z_p}\vec{k}_B\right) \cdot \vec{X}_{A_k}\right] \vec{i}_B \cdot \vec{\eta}_i\, dr$$

$$+ \int_{r_{FA}}^{1} \xi_k \frac{c^2}{32}\left(1 + 4\frac{x_{A_e}}{c}\right) 2u_R \vec{i} \cdot \vec{\eta}_i' \ \mathrm{sign}(V) \frac{c}{c_m}\, dr$$

$$M_{p_k q_i} = \mu \cos \psi_m \left\{ \int_{r_{FA}}^{1} \left[\xi_k M_{a_T} - \left(F_{x_T} \vec{i}_B + F_{z_T} \vec{k}_B \right) \cdot \vec{X}_{A_k} \right] \vec{k}_B \cdot \vec{\eta}_i' \, dr \right.$$

$$\left. + \int_{r_{FA}}^{1} \left[\xi_k M_{a_p} - \left(F_{x_p} \vec{i}_B + F_{z_p} \vec{k}_B \right) \cdot \vec{X}_{A_k} \right] \vec{i}_B \cdot \vec{\eta}_i' \, dr \right\}$$

$$- \int_{r_{FA}}^{1} \left(\frac{F_x}{ac} \vec{i}_B + \frac{F_z}{ac} \vec{k}_B \right) \cdot \vec{X}_{A_k q_i} \, dr$$

$$- \int_{r_{FA}}^{1} \xi_k \frac{c^2}{32} |V| \left[1 + 8 \frac{x_{A_e}}{c} + 16 \left(\frac{x_{A_e}}{c} \right)^2 \right] \vec{i}_B \cdot \vec{\eta}_i' \frac{c}{c_m} \, dr$$

$$- \int_{r_{FA}}^{1} \xi_k \frac{c^2}{32} \left(1 + 4 \frac{x_{A_e}}{c} \right) \left[\mu \sin \psi_m \vec{i} \cdot \vec{\eta}_i' \right.$$

$$\left. - \left(\mu \cos \psi_m \right)^2 \vec{i} \cdot \vec{\eta}_i'' \right] \operatorname{sign}(V) \frac{c}{c_m} \, dr$$

$$M_{p_k p_i} = \int_{r_{FA}}^{1} \left[\xi_k M_{a_\theta} - \left(F_{x_\theta} \vec{i}_B + F_{z_\theta} \vec{k}_B \right) \cdot \vec{X}_{A_k} \right] \xi_i \, dr$$

$$- \int_{r_{FA}}^{1} \xi_k \frac{c^2}{32} u_R \xi_i' |V| \left(1 + 4 \frac{x_{A_e}}{c} \right) \frac{c}{c_m} \, dr$$

$$M_{p_k \dot{p}_i} = - \int_{r_{FA}}^{1} \xi_k \xi_i \frac{c^2}{16} |V| \left[1 + 6 \frac{x_{A_e}}{c} + 8 \left(\frac{x_{A_e}}{c} \right)^2 \right] \frac{c}{c_m} \, dr$$

where

$$\vec{X}_{A_k} = - \int_{r_{FA}}^{r} \xi_k (z_o \vec{i} - x_o \vec{k})''(r - \rho) d\rho$$

$$\vec{X}_{A_o} = - (z_o \vec{i} - x_o \vec{k}) + \left[\left(\delta_{FA_2} - \delta_{FA_4} \right) \vec{i}_B + \left(\delta_{FA_3} - \delta_{FA_5} \right) \vec{k}_B \right] (r - r_{FA})$$

$$+ (z_o \vec{i} - x_o \vec{k}) \Big|_{r_{FA}} + (z_o \vec{i} - x_o \vec{k})' \Big|_{r_{FA}} (r - r_{FA})$$

and

$$\vec{X}_{A_k q_i} = -\int_{r_{FA}}^{r} \xi_k \vec{\eta}_i''(r - \rho)d\rho$$

$$\vec{X}_{A_k q_o} = -\vec{\eta}_i + \vec{\eta}_i(r_{FA}) + \vec{\eta}_i'(r_{FA})(r - r_{FA})$$

APPENDIX B. MATRICES OF ROTOR EQUATIONS OF MOTION

B1. INERTIAL MATRICES FOR ROTOR EQUATIONS

The inertial matrices for the rotor equations of motion in the nonrotating frame (see section 2.6.1) are given below. For clarity, the superscript * denoting the normalization of the inertial coefficients has been omitted. The inertial coefficients are defined in appendix A1.

$$
A_2 = \begin{bmatrix}
I_{q_k} & & & -S_{q_k\ddot{p}_i} & & & & & I_{q_k\alpha}\cdot\vec{k}_B & & \\
& I_{q_k} & & & -S_{q_k\ddot{p}_i} & & I_{q_k\alpha}\cdot\vec{i}_B & -I_{\dot{q}_k\alpha} & & & \\
& & I_{q_k} & & & -S_{q_k\ddot{p}_i} & I_{\dot{q}_k\alpha} & I_{q_k\alpha}\cdot\vec{i}_B & & & \\
-S_{p_k\ddot{q}_i} & & & I_{p_k}+I_{p_k\ddot{p}_i} & & & & & I_{p_k\alpha}\cdot\vec{i}_B & & \\
& -S_{p_k\ddot{q}_i} & & & I_{p_k}+I_{p_k\ddot{p}_i} & & -I_{p_k\alpha}\cdot\vec{k}_B & -S_{p_k\ddot{\alpha}} & & & \\
& & -S_{p_k\ddot{q}_i} & & & I_{p_k}+I_{p_k\ddot{p}_i} & S_{p_k\ddot{\alpha}} & -I_{p_k\alpha}\cdot\vec{k}_B & & & \\
& I_{q_i\alpha}\cdot\vec{i}_B & & & -S_{p_i\alpha}\cdot\vec{i}_B & & I_o & & & & \\
& & I_{q_i\alpha}\cdot\vec{i}_B & & & -S_{p_i\alpha}\cdot\vec{i}_B & & I_o & & & \\
I_{q_i\alpha}\cdot\vec{k}_B & & & -S_{p_i\alpha}\cdot\vec{k}_B & & & & & I_o+I_E r_E^2 & & \\
& & & & & & & & & \gamma\frac{k_o}{\sigma a} & \\
& & & & & & & & & & \gamma\frac{2k_c}{\sigma a} \\
& & & & & & & & & & \gamma\frac{2k_s}{\sigma a}
\end{bmatrix}
$$

$$
A_1 = \begin{bmatrix}
I_{q_k} g_s \nu_k + 2I_{q_k} \dot{q}_i & & & & & & & 2I_{q_k} \dot{\psi} & & & \\
& I_{q_k} g_s \nu_k + 2I_{q_k} \dot{q}_i & 2I_{q_k} & & -2S_{q_k} \ddot{p}_i & & 2I_{q_k} \alpha \cdot \vec{i}_B & & & & \\
& -2I_{q_k} & I_{q_k} g_s \nu_k + 2I_{q_k} \dot{q}_i & & 2S_{q_k} \ddot{p}_i & & -2I_{q_k} \alpha \cdot \vec{i}_B & & & & \\
& & & I_{p_k} g_s \omega_k & & & & & & & \\
& & -2S_{p_k} \ddot{q}_i & & I_{p_k} g_s \omega_k & 2I_{p_k} + 2I_{p_k} \ddot{p}_i & & -2I_{p_k} \alpha \cdot \vec{k}_B & & & \\
& 2S_{p_k} \ddot{q}_i & & & -2I_{p_k} - 2I_{p_k} \ddot{p}_i & I_{p_k} g_s \omega_k & 2I_{p_k} \alpha \cdot \vec{k}_B & & & & \\
& 2I_{\dot{q}_i} \alpha & 2I_{q_i} \alpha \cdot \vec{i}_B & & & -2S_{p_i} \alpha \cdot \vec{i}_B & I_o C_G & 2I_o & & & \\
& -2I_{q_i} \alpha \cdot \vec{i}_B & 2I_{\dot{q}_i} \alpha & & 2S_{p_i} \alpha \cdot \vec{i}_B & & -2I_o & I_o C_G & & & \\
-2I_{\dot{q}_i} \psi & & & & & & & & Q_\Omega r_E^2 & & \\
& & & & & & & & & \frac{2\gamma}{\sigma a} \left(\lambda_o + \sqrt{\mu^2 + \lambda_o^2}\right) & & \\
& & & & & & & & & & \frac{\gamma}{\sigma a} \sqrt{\mu^2 + \lambda_o^2} & \\
& & & & & & & & & & & \frac{\gamma}{\sigma a} \sqrt{\mu^2 + \lambda_o^2}
\end{bmatrix}
$$

$$
A_o = \begin{bmatrix}
I_{q_k}\nu_k^2 & & & -S_{q_k p_i} & & & & & & & \\
 & I_{q_k}(\nu_k^2-1) & I_{q_k}g_s\nu_k + 2I_{q_k}\dot{q}_i & & S_{q_k}\ddot{p}_i - S_{q_k p_i} & & & & & & \\
 & -I_{q_k}g_s\nu_k - 2I_{q_k}\dot{q}_i & I_{q_k}(\nu_k^2-1) & & & S_{q_k}\ddot{p}_i - S_{q_k p_i} & & & & & \\
-S_{p_k q_i} & & & I_{p_k}\omega_k^2 + I_{p_k p_i} & & & & & & & \\
 & S_{p_k}\ddot{q}_i - S_{p_k q_i} & & & I_{p_k}(\omega_k^2-1) + I_{p_k p_i} - I_{p_k}\ddot{p}_i & I_{p_k}g_s\omega_k & S_{p_k o}K_{p_G} & & -S_{p_k o}\theta_{1s} & & \\
 & & S_{p_k}\ddot{q}_i - S_{p_k q_i} & & -I_{p_k}g_s\omega_k & I_{p_k}(\omega_k^2-1) + I_{p_k p_i} - I_{p_k}\ddot{p}_i & & S_{p_k o}K_{p_G} & S_{p_k o}\theta_{1c} & & \\
 & & 2I_{\dot{q}_i}\alpha & & & & I_o(\nu_G^2-1) & & & & \\
 & -2I_{\dot{q}_i}\alpha & & & & & & I_o(\nu_G^2-1) & & & \\
 & & & & & & & & & & \\
 & & & & & & & & & & \\
 & & & & & & & & & & \\
 & & & & & & & & & &
\end{bmatrix}
$$

$$
\tilde{A}_2 = \begin{bmatrix}
 & & S_{q_k}\cdot\vec{i}_B & & & I_{q_k\alpha}\cdot\vec{k}_B \\
 & S_{q_k}\cdot\vec{k}_B & & & -I_{q_k\alpha}\cdot\vec{i}_B & \\
-S_{q_k}\cdot\vec{k}_B & & & I_{q_k\alpha}\cdot\vec{i}_B & & \\
 & & -S_{p_k}\cdot\vec{k}_B & & & I_{p_k\alpha}\cdot\vec{i}_B \\
 & S_{p_k}\cdot\vec{i}_B & & & I_{p_k\alpha}\cdot\vec{k}_B & \\
-S_{p_k}\cdot\vec{i}_B & & & -I_{p_k\alpha}\cdot\vec{k}_B & & \\
 & & & & -I_o & \\
 & & & I_o & & \\
 & & & & & I_o \\
 & & & & & \\
 & & & & & \\
 & & & & &
\end{bmatrix}
$$

$$
\tilde{A}_1 = \begin{bmatrix}
 & & & & & 2I_{q_k}\dot{\psi} \\
 & & & 2I_{q_k}\alpha\cdot\vec{i}_B & & \\
 & & & & 2I_{q_k}\alpha\cdot\vec{i}_B & \\
 & & & & & \\
 & & & -2I_{p_k}\alpha\cdot\vec{k}_B & & \\
 & & & & -2I_{p_k}\alpha\cdot\vec{k}_B & \\
 & & & 2I_o & & \\
 & & & & 2I_o & \\
 & & & & & \\
 & & & & & \\
 & & & & & \\
 & & & & &
\end{bmatrix}
$$

$$
B = \begin{bmatrix}
 & & \\
 & & \\
 & & \\
I_{p_o}\omega_o^2\xi_k(r_{FA}) & & \\
 & I_{p_o}\omega_o^2\xi_k(r_{FA}) & \\
 & & I_{p_o}\omega_o^2\xi_k(r_{FA}) \\
 & & \\
 & & \\
 & & \\
 & & \\
 & & \\
 & & \\
\end{bmatrix}
$$

$$C_2 = \begin{bmatrix} -S_{q_i}\cdot\vec{i}_B & & & & & & & & & & & \\ & & S_{q_i}\cdot\vec{k}_B & & & & & & & & & \\ & S_{q_i}\cdot\vec{k}_B & & & & & & & & & & \\ I_{q_i\alpha}\cdot\vec{k}_B & & & -S_{p_i\alpha}\cdot\vec{k}_B & & & & & I_o & & & \\ & I_{q_i\alpha}\cdot\vec{i}_B & & & -S_{p_i\alpha}\cdot\vec{i}_B & & I_o & & & & & \\ & & I_{q_i\alpha}\cdot\vec{i}_B & & & -S_{p_i\alpha}\cdot\vec{i}_B & & I_o & & & & \end{bmatrix}$$

$$
C_1 = \begin{bmatrix}
 & & & & & & & & & & & \\
 & & & & & & & & & & & \\
 & & & & & & & & & & & \\
-2I_{\dot{q}_i\psi} & & & & & & & & & & & \\
 & 2I_{\dot{q}_i\alpha} & 2I_{q_i\alpha}\cdot\vec{i}_B & & & -2S_{p_i\alpha}\cdot\vec{i}_B & & 2I_o & & & & \\
 & -2I_{q_i\alpha}\cdot\vec{i}_B & 2I_{\dot{q}_i\alpha} & & 2S_{p_i\alpha}\cdot\vec{i}_B & & -2I_o & & & & &
\end{bmatrix}
$$

$$C_o = \begin{bmatrix} & & & & & & & & & & & \\ & & & & & & & & & & & \\ & & & & & & & & & & & \\ & & & & & & & & & & & \\ & & 2I_{\dot{q}_i\alpha} & & & & & & & & & \\ & -2I_{\dot{q}_i\alpha} & & & & & & & & & & \end{bmatrix}$$

$$\tilde{C}_2 = \begin{bmatrix} & & -M_b & & & \\ -2M_b & & & & & \\ & 2M_b & & & & \\ & & & & & I_o \\ & & & & -I_o & \\ & & & I_o & & \end{bmatrix}$$

$$\tilde{C}_1 = \begin{bmatrix} & & & & & \\ & & & & & \\ & & & & & \\ & & & & & \\ & & & 2I_o & & \\ & & & & 2I_o & \end{bmatrix}$$

and:

$$M_{aero} = \gamma \begin{bmatrix} \frac{M_{\beta_o}}{ac} \\ \frac{M_{\beta_{1C}}}{ac} \\ \frac{M_{\beta_{1S}}}{ac} \\ \frac{M_{\theta_o}}{ac} \\ \frac{M_{\theta_{1C}}}{ac} \\ \frac{M_{\theta_{1S}}}{ac} \\ -\frac{2C_{M_y}}{\sigma a} \\ \frac{2C_{M_x}}{\sigma a} \\ -\frac{C_Q}{\sigma a} \\ -\frac{C_T}{\sigma a} \\ \frac{2C_{M_y}}{\sigma a} \\ -\frac{2C_{M_x}}{\sigma a} \end{bmatrix} \qquad F_{aero} = \gamma \begin{bmatrix} \frac{C_T}{\sigma a} \\ \frac{2C_H}{\sigma a} \\ -\frac{2C_Y}{\sigma a} \\ \frac{C_Q}{\sigma a} \\ \frac{2C_{M_y}}{\sigma a} \\ -\frac{2C_{M_x}}{\sigma a} \end{bmatrix}$$

B2. AERODYNAMIC MATRICES FOR ROTOR EQUATIONS IN AXIAL FLOW

The aerodynamic matrices for the rotor equations of motion in axial flow (see section 2.6.2) are given below. The aerodynamic coefficients are defined in appendix A2.

$$
A_1 = \begin{bmatrix}
-\gamma M_{q_k \dot{q}_i} & & & & & & & & -\gamma M_{q_k \dot{\zeta}} & -\gamma M_{q_k \lambda} & & \\
& -\gamma M_{q_k \dot{q}_i} & & & & & -\gamma M_{q_k \dot{\beta}} & & & & -\gamma M_{q_k \dot{\beta}} & \\
& & -\gamma M_{q_k \dot{q}_i} & & & & & -\gamma M_{q_k \dot{\beta}} & & & & -\gamma M_{q_k \dot{\beta}} \\
-\gamma M_{p_k \dot{q}_i} & & & -\gamma M_{p_k \dot{p}_i} & & & & & -\gamma M_{p_k \dot{\zeta}} & -\gamma M_{p_k \lambda} & & \\
& -\gamma M_{p_k \dot{q}_i} & & & -\gamma M_{p_k \dot{p}_i} & & -\gamma M_{p_k \dot{\beta}} & & & & -\gamma M_{p_k \dot{\beta}} & \\
& & -\gamma M_{p_k \dot{q}_i} & & & -\gamma M_{p_k \dot{p}_i} & & -\gamma M_{p_k \dot{\beta}} & & & & -\gamma M_{p_k \dot{\beta}} \\
& -\gamma M_{\dot{q}_i} & & & & & -\gamma M_{\dot{\beta}} & & & & -\gamma M_{\dot{\beta}} & \\
& & -\gamma M_{\dot{q}_i} & & & & & -\gamma M_{\dot{\beta}} & & & & -\gamma M_{\dot{\beta}} \\
\gamma Q_{\dot{p}_i} & & & & & & & & \gamma Q_{\dot{\zeta}} & \gamma Q_{\lambda} & & \\
-\gamma T_{\dot{q}_i} & & & & & & & & -\gamma T_{\dot{\zeta}} & -\gamma T_{\lambda} & & \\
& -\gamma M_{\dot{q}_i} & & & & & -\gamma M_{\dot{\beta}} & & & & -\gamma M_{\dot{\beta}} & \\
& & -\gamma M_{\dot{q}_i} & & & & & -\gamma M_{\dot{\beta}} & & & & -\gamma M_{\dot{\beta}}
\end{bmatrix}
$$

$$
A_o = \begin{bmatrix}
-\gamma M_{q_k q_i} & & & -\gamma M_{q_k p_i} & & & & & -\gamma M_{q_k \zeta} & & & \\
& -\gamma M_{q_k q_i} & -\gamma M_{q_k \dot{q}_i} & & -\gamma M_{q_k p_i} & & -\gamma M_{q_k \beta} & -\gamma M_{q_k \dot{\beta}} & & & & \\
& \gamma M_{q_k \dot{q}_i} & -\gamma M_{q_k q_i} & & & -\gamma M_{q_k p_i} & \gamma M_{q_k \dot{\beta}} & -\gamma M_{q_k \beta} & & & & \\
-\gamma M_{p_k q_i} & & & -\gamma M_{p_k p_i} & & & & & -\gamma M_{p_k \zeta} & & & \\
& -\gamma M_{p_k q_i} & -\gamma M_{p_k \dot{q}_i} & & -\gamma M_{p_k p_i} & -\gamma M_{p_k \dot{p}_i} & -\gamma M_{p_k \beta} & -\gamma M_{p_k \dot{\beta}} & & & & \\
& \gamma M_{p_k \dot{q}_i} & -\gamma M_{p_k q_i} & & \gamma M_{p_k \dot{p}_i} & -\gamma M_{p_k p_i} & \gamma M_{p_k \dot{\beta}} & -\gamma M_{p_k \beta} & & & & \\
& -\gamma M_{q_i} & -\gamma M_{\dot{q}_i} & & -\gamma M_{p_i} & & -\gamma M_{\beta} & -\gamma M_{\dot{\beta}} & & & & \\
& \gamma M_{\dot{q}_i} & -\gamma M_{q_i} & & & -\gamma M_{p_i} & \gamma M_{\dot{\beta}} & -\gamma M_{\beta} & & & & \\
\gamma Q_{q_i} & & & \gamma Q_{p_i} & & & & & \gamma Q_{\zeta} & & & \\
-\gamma T_{q_i} & & & -\gamma T_{p_i} & & & & & -\gamma T_{\zeta} & & & \\
& -\gamma M_{q_i} & -\gamma M_{\dot{q}_i} & & -\gamma M_{p_i} & & -\gamma M_{\beta} & -\gamma M_{\dot{\beta}} & & & & \\
& \gamma M_{\dot{q}_i} & -\gamma M_{q_i} & & & -\gamma M_{p_i} & \gamma M_{\dot{\beta}} & -\gamma M_{\beta} & & & &
\end{bmatrix}
$$

$$
\tilde{A}_1 = \begin{bmatrix}
 & & -\gamma M_{q_k\lambda} & & & -\gamma M_{q_k\dot{\zeta}} \\
 & -\gamma M_{q_k\mu} & & & \gamma M_{q_k\dot{\beta}} & \\
\gamma M_{q_k\mu} & & & -\gamma M_{q_k\dot{\beta}} & & \\
 & & -\gamma M_{p_k\lambda} & & & -\gamma M_{p_k\dot{\zeta}} \\
 & -\gamma M_{p_k\mu} & & & \gamma M_{p_k\dot{\beta}} & \\
\gamma M_{p_k\mu} & & & -\gamma M_{p_k\dot{\beta}} & & \\
 & -\gamma M_{\mu} & & & \gamma M_{\dot{\beta}} & \\
\gamma M_{\mu} & & & -\gamma M_{\dot{\beta}} & & \\
 & & \gamma Q_{\lambda} & & & \gamma Q_{\dot{\zeta}} \\
 & & -\gamma T_{\lambda} & & & -\gamma T_{\dot{\zeta}} \\
 & -\gamma M_{\mu} & & & \gamma M_{\dot{\beta}} & \\
\gamma M_{\mu} & & & -\gamma M_{\dot{\beta}} & &
\end{bmatrix}
$$

$$
\tilde{A}_o = \begin{bmatrix}
 & & & & \gamma\mu M_{q_k\lambda} & -\gamma M_{q_k\zeta} \\
 & & & -\gamma\lambda M_{q_k\mu} & & \\
 & & & & -\gamma\lambda M_{q_k\mu} & \\
 & & & & -\gamma\mu M_{p_k\lambda} & -\gamma M_{p_k\zeta} \\
 & & & -\gamma\lambda M_{p_k\mu} & & \\
 & & & & -\gamma\lambda M_{p_k\mu} & \\
 & & & -\gamma\lambda M_{\mu} & & \\
 & & & & -\gamma\lambda M_{\mu} & \\
 & & & & -\gamma\mu Q_{\lambda} & \gamma Q_{\zeta} \\
 & & & & \gamma\mu T_{\lambda} & -\gamma T_{\zeta} \\
 & & & -\gamma\lambda M_{\mu} & & \\
 & & & & -\gamma\lambda M_{\mu} &
\end{bmatrix}
$$

$$
B_G = \begin{bmatrix}
 & & -\gamma M_{q_k\lambda} \\
 & \gamma M_{q_k\mu} & \\
\gamma M_{q_k\mu} & & \\
 & & -\gamma M_{p_k\lambda} \\
 & \gamma M_{p_k\mu} & \\
\gamma M_{p_k\mu} & & \\
 & \gamma M_{\mu} & \\
\gamma M_{\mu} & & \\
 & & \gamma Q_{\lambda} \\
 & & -\gamma T_{\lambda} \\
 & \gamma M_{\mu} & \\
\gamma M_{\mu} & &
\end{bmatrix}
$$

$$
C_1 = \left[\begin{array}{c|c|c|c|c|c|c|c|c|c|c|c}
\gamma T_{\dot{q}_i} & & & & & & & & \gamma T_{\dot{\zeta}} & \gamma T_{\lambda} & & \\
\hline
 & \gamma R_{\dot{q}_i} & \gamma H_{\dot{q}_i} & & & & \gamma R_{\dot{\beta}} & \gamma H_{\dot{\beta}} & & & \gamma R_{\dot{\beta}} & \gamma H_{\dot{\beta}} \\
\hline
 & \gamma H_{\dot{q}_i} & -\gamma R_{\dot{q}_i} & & & & \gamma H_{\dot{\beta}} & -\gamma R_{\dot{\beta}} & & & \gamma H_{\dot{\beta}} & -\gamma R_{\dot{\beta}} \\
\hline
\gamma Q_{\dot{q}_i} & & & & & & & & \gamma Q_{\dot{\zeta}} & \gamma Q_{\lambda} & & \\
\hline
 & -\gamma M_{\dot{q}_i} & & & & & -\gamma M_{\dot{\beta}} & & & & -\gamma M_{\dot{\beta}} & \\
\hline
 & & -\gamma M_{\dot{q}_i} & & & & & -\gamma M_{\dot{\beta}} & & & & -\gamma M_{\dot{\beta}}
\end{array}\right]
$$

$$
C_o = \left[\begin{array}{c|c|c|c|c|c|c|c|c|c|c|c}
\gamma T_{q_i} & & & \gamma T_{p_i} & & & & & \gamma T_{\zeta} & & & \\
\hline
 & \gamma R_{q_i} - \gamma H_{\dot{q}_i} & \gamma H_{q_i} + \gamma R_{\dot{q}_i} & & \gamma R_{p_i} & \gamma H_{q_i} & \gamma R_{\beta} - \gamma H_{\dot{\beta}} & \gamma H_{\beta} + \gamma R_{\dot{\beta}} & & & & \\
\hline
 & \gamma H_{q_i} + \gamma R_{\dot{q}_i} & -\gamma R_{q_i} + \gamma H_{\dot{q}_i} & & \gamma H_{p_i} & -\gamma R_{p_i} & \gamma H_{\beta} + \gamma R_{\dot{\beta}} & -\gamma R_{\beta} + \gamma H_{\dot{\beta}} & & & & \\
\hline
\gamma Q_{q_i} & & & \gamma Q_{p_i} & & & & & \gamma Q_{\zeta} & & & \\
\hline
 & -\gamma M_{q_i} & -\gamma M_{\dot{q}_i} & & -\gamma M_{p_i} & & -\gamma M_{\beta} & -\gamma M_{\dot{\beta}} & & & & \\
\hline
 & \gamma M_{\dot{q}_i} & -\gamma M_{q_i} & & & -\gamma M_{p_i} & \gamma M_{\dot{\beta}} & -\gamma M_{\beta} & & & &
\end{array}\right]
$$

$$\tilde{C}_1 = \begin{bmatrix} & & \gamma T_\lambda & & & \gamma T_{\dot{\zeta}} \\ -\gamma(H_\mu+R_\mu) & \gamma R_r & & \gamma H_{\dot{\beta}} & -\gamma R_{\dot{\beta}} & \\ \gamma R_r & \gamma(H_\mu+R_\mu) & & -\gamma R_{\dot{\beta}} & -\gamma H_{\dot{\beta}} & \\ & & \gamma Q_\lambda & & & \gamma Q_{\dot{\zeta}} \\ & -\gamma M_\mu & & & \gamma M_{\dot{\beta}} & \\ \gamma M_\mu & & & -\gamma M_{\dot{\beta}} & & \end{bmatrix}$$

$$
\tilde{C}_o = \begin{bmatrix}
 & & & & -\gamma\mu T_\lambda & \gamma T_\zeta \\
 & & & \gamma\lambda R_r & \gamma\lambda(H_\mu+R_\mu) & \\
 & & & \gamma\lambda(H_\mu+R_\mu) & -\gamma\lambda R_r & \\
 & & & & -\gamma\mu Q_\lambda & \gamma Q_\zeta \\
 & & & -\gamma\lambda M_\mu & & \\
 & & & & -\gamma\lambda M_\mu &
\end{bmatrix}
$$

$$D_G = \begin{bmatrix} & & -\gamma T_\lambda \\ \gamma(H_\mu + R_\mu) & \gamma R_r & \\ -\gamma R_r & \gamma(H_\mu + R_\mu) & \\ & & -\gamma Q_\lambda \\ & -\gamma M_\mu & \\ -\gamma M_\mu & & \end{bmatrix}$$

B3. AERODYNAMIC MATRICES FOR ROTOR EQUATIONS IN NONAXIAL FLOW

The aerodynamic matrices for the rotor equations of motion in nonaxial flow (see section 2.6.3) are given below. Note that each matrix is a summation over all the blades, that is, $m = 1, \ldots, N$. The notation $C = \cos \psi_m$ and $S = \sin \psi_m$ is used in these matrices. The aerodynamic coefficients are defined in appendix A2.

$$
A_1 = \gamma \frac{1}{N} \sum_m
\begin{bmatrix}
-M_{q_k \dot{q}_i} & -M_{q_k \dot{q}_i} C & -M_{q_k \dot{q}_i} S & & & & -M_{q_k \dot{\beta}} C & -M_{q_k \dot{\beta}} S & -M_{q_k \dot{\zeta}} & -M_{q_k \lambda} & -M_{q_k \dot{\beta}} C & -M_{q_k \dot{\beta}} S \\
-M_{q_k \dot{q}_i} 2C & -M_{q_k \dot{q}_i} 2C^2 & -M_{q_k \dot{q}_i} 2CS & & & & -M_{q_k \dot{\beta}} 2C^2 & -M_{q_k \dot{\beta}} 2CS & -M_{q_k \dot{\zeta}} 2C & -M_{q_k \lambda} 2C & -M_{q_k \dot{\beta}} 2C^2 & -M_{q_k \dot{\beta}} 2CS \\
-M_{q_k \dot{q}_i} 2S & -M_{q_k \dot{q}_i} 2CS & -M_{q_k \dot{q}_i} 2S^2 & & & & -M_{q_k \dot{\beta}} 2CS & -M_{q_k \dot{\beta}} 2S^2 & -M_{q_k \dot{\zeta}} 2S & -M_{q_k \lambda} 2S & -M_{q_k \dot{\beta}} 2CS & -M_{q_k \dot{\beta}} 2S^2 \\
-M_{p_k \dot{q}_i} & -M_{p_k \dot{q}_i} C & -M_{p_k \dot{q}_i} S & -M_{p_k \dot{p}_i} & -M_{p_k \dot{p}_i} C & -M_{p_k \dot{p}_i} S & -M_{p_k \dot{\beta}} C & -M_{p_k \dot{\beta}} S & -M_{p_k \dot{\zeta}} & -M_{p_k \lambda} & -M_{p_k \dot{\beta}} C & -M_{p_k \dot{\beta}} S \\
-M_{p_k \dot{q}_i} 2C & -M_{p_k \dot{q}_i} 2C^2 & -M_{p_k \dot{q}_i} 2CS & -M_{p_k \dot{p}_i} 2C & -M_{p_k \dot{p}_i} 2C^2 & -M_{p_k \dot{p}_i} 2CS & -M_{p_k \dot{\beta}} 2C^2 & -M_{p_k \dot{\beta}} 2CS & -M_{p_k \dot{\zeta}} 2C & -M_{p_k \lambda} 2C & -M_{p_k \dot{\beta}} 2C^2 & -M_{p_k \dot{\beta}} 2CS \\
-M_{p_k \dot{q}_i} 2S & -M_{p_k \dot{q}_i} 2CS & -M_{p_k \dot{q}_i} 2S^2 & -M_{p_k \dot{p}_i} 2S & -M_{p_k \dot{p}_i} 2CS & -M_{p_k \dot{p}_i} 2S^2 & -M_{p_k \dot{\beta}} 2CS & -M_{p_k \dot{\beta}} 2S^2 & -M_{p_k \dot{\zeta}} 2S & -M_{p_k \lambda} 2S & -M_{p_k \dot{\beta}} 2CS & -M_{p_k \dot{\beta}} 2S^2 \\
-M_{\dot{q}_i} 2C & -M_{\dot{q}_i} 2C^2 & -M_{\dot{q}_i} 2CS & & & & -M_{\dot{\beta}} 2C^2 & -M_{\dot{\beta}} 2CS & -M_{\dot{\zeta}} 2C & -M_{\lambda} 2C & -M_{\dot{\beta}} 2C^2 & -M_{\dot{\beta}} 2CS \\
-M_{\dot{q}_i} 2S & -M_{\dot{q}_i} 2CS & -M_{\dot{q}_i} 2S^2 & & & & -M_{\dot{\beta}} 2CS & -M_{\dot{\beta}} 2S^2 & -M_{\dot{\zeta}} 2S & -M_{\lambda} 2S & -M_{\dot{\beta}} 2CS & -M_{\dot{\beta}} 2S^2 \\
Q_{\dot{q}_i} & Q_{\dot{q}_i} C & Q_{\dot{q}_i} S & & & & Q_{\dot{\beta}} C & Q_{\dot{\beta}} S & Q_{\dot{\zeta}} & Q_{\lambda} & Q_{\dot{\beta}} C & Q_{\dot{\beta}} S \\
-T_{\dot{q}_i} & -T_{\dot{q}_i} C & -T_{\dot{q}_i} S & & & & -T_{\dot{\beta}} C & -T_{\dot{\beta}} S & -T_{\dot{\zeta}} & -T_{\lambda} & -T_{\dot{\beta}} C & -T_{\dot{\beta}} S \\
-M_{\dot{q}_i} 2C & -M_{\dot{q}_i} 2C^2 & -M_{\dot{q}_i} 2CS & & & & -M_{\dot{\beta}} 2C^2 & -M_{\dot{\beta}} 2CS & -M_{\dot{\zeta}} 2C & -M_{\lambda} 2C & -M_{\dot{\beta}} 2C^2 & -M_{\dot{\beta}} 2CS \\
-M_{\dot{q}_i} 2S & -M_{\dot{q}_i} 2CS & -M_{\dot{q}_i} 2S^2 & & & & -M_{\dot{\beta}} 2CS & -M_{\dot{\beta}} 2S^2 & -M_{\dot{\zeta}} 2S & -M_{\lambda} 2S & -M_{\dot{\beta}} 2CS & -M_{\dot{\beta}} 2S^2
\end{bmatrix}
$$

$$A_o = \gamma \frac{1}{N} \sum_m$$

$-M_{q_k q_i}$	$M_{q_k \dot{q}_i} S$ $-M_{q_k q_i} C$	$-M_{q_k \dot{q}_i} C$ $-M_{q_k q_i} S$	$-M_{q_k p_i}$	$-M_{q_k p_i} C$	$-M_{q_k p_i} S$	$M_{q_k \dot{\beta}} S$ $-M_{q_k \beta} C$	$-M_{q_k \dot{\beta}} C$ $-M_{q_k \beta} S$	$-M_{q_k \zeta}$			
$-M_{q_k q_i} 2C$	$M_{q_k \dot{q}_i} 2CS$ $-M_{q_k q_i} 2C^2$	$-M_{q_k \dot{q}_i} 2C^2$ $-M_{q_k q_i} 2CS$	$-M_{q_k p_i} 2C$	$-M_{q_k p_i} 2C^2$	$-M_{q_k p_i} 2CS$	$M_{q_k \dot{\beta}} 2CS$ $-M_{q_k \beta} 2C^2$	$-M_{q_k \dot{\beta}} 2C^2$ $-M_{q_k \beta} 2CS$	$-M_{q_k \zeta} 2C$			
$-M_{q_k q_i} 2S$	$M_{q_k \dot{q}_i} 2S^2$ $-M_{q_k q_i} 2CS$	$-M_{q_k \dot{q}_i} 2CS$ $-M_{q_k q_i} 2S^2$	$-M_{q_k p_i} 2S$	$-M_{q_k p_i} 2CS$	$-M_{q_k p_i} 2S^2$	$M_{q_k \dot{\beta}} 2S^2$ $-M_{q_k \beta} 2CS$	$-M_{q_k \dot{\beta}} 2CS$ $-M_{q_k \beta} 2S^2$	$-M_{q_k \zeta} 2S$			
$-M_{p_k q_i}$	$+M_{p_k \dot{q}_i} S$ $-M_{p_k q_i} C$	$-M_{p_k \dot{q}_i} C$ $-M_{p_k q_i} S$	$-M_{p_k p_i}$	$-M_{p_k p_i} C$ $M_{p_k \dot{p}_i} S$	$-M_{p_k p_i} S$ $-M_{p_k \dot{p}_i} C$	$+M_{p_k \dot{\beta}} S$ $-M_{p_k \beta} C$	$-M_{p_k \dot{\beta}} C$ $-M_{p_k \beta} S$	$-M_{p_k \zeta}$			
$-M_{p_k q_i} 2C$	$+M_{p_k \dot{q}_i} 2CS$ $-M_{p_k q_i} 2C^2$	$-M_{p_k \dot{q}_i} 2C^2$ $-M_{p_k q_i} 2CS$	$-M_{p_k p_i} 2C$	$-M_{p_k p_i} 2C^2$ $M_{p_k \dot{p}_i} 2CS$	$-M_{p_k p_i} 2CS$ $-M_{p_k \dot{p}_i} 2C^2$	$+M_{p_k \dot{\beta}} 2CS$ $-M_{p_k \beta} 2C^2$	$-M_{p_k \dot{\beta}} 2C^2$ $-M_{p_k \beta} 2CS$	$-M_{p_k \zeta} 2C$			
$-M_{p_k q_i} 2S$	$+M_{p_k \dot{q}_i} 2S^2$ $-M_{p_k q_i} 2CS$	$-M_{p_k \dot{q}_i} 2CS$ $-M_{p_k q_i} 2S^2$	$-M_{p_k p_i} 2S$	$-M_{p_k p_i} 2CS$ $M_{p_k \dot{p}_i} 2S^2$	$-M_{p_k p_i} 2S^2$ $-M_{p_k \dot{p}_i} 2CS$	$+M_{p_k \dot{\beta}} 2S^2$ $-M_{p_k \beta} 2CS$	$-M_{p_k \dot{\beta}} 2CS$ $-M_{p_k \beta} 2S^2$	$-M_{p_k \zeta} 2S$			
$-M_{q_i} 2C$	$+M_{\dot{q}_i} 2CS$ $-M_{q_i} 2C^2$	$-M_{\dot{q}_i} 2C^2$ $-M_{q_i} 2CS$	$-M_{p_i} 2C$	$-M_{p_i} 2C^2$	$-M_{p_i} 2CS$	$+M_{\dot{\beta}} 2CS$ $-M_{\beta} 2C^2$	$-M_{\dot{\beta}} 2C^2$ $-M_{\beta} 2CS$	$-M_{\zeta} 2C$			
$-M_{q_i} 2S$	$+M_{\dot{q}_i} 2S^2$ $-M_{q_i} 2CS$	$-M_{\dot{q}_i} 2CS$ $-M_{q_i} 2S^2$	$-M_{p_i} 2S$	$-M_{p_i} 2CS$	$-M_{p_i} 2S^2$	$+M_{\dot{\beta}} 2S^2$ $-M_{\beta} 2CS$	$-M_{\dot{\beta}} 2CS$ $-M_{\beta} 2S^2$	$-M_{\zeta} 2S$			
Q_{q_i}	$Q_{q_i} C$ $-Q_{\dot{q}_i} S$	$Q_{q_i} S$ $Q_{\dot{q}_i} C$	Q_{p_i}	$Q_{p_i} C$	$Q_{p_i} S$	$-Q_{\dot{\beta}} S$ $Q_{\beta} C$	$Q_{\dot{\beta}} C$ $Q_{\beta} S$	Q_{ζ}			
$-T_{q_i}$	$-T_{q_i} C$ $T_{\dot{q}_i} S$	$-T_{q_i} S$ $-T_{\dot{q}_i} C$	$-T_{p_i}$	$-T_{p_i} C$	$-T_{p_i} S$	$T_{\dot{\beta}} S$ $-T_{\beta} C$	$-T_{\dot{\beta}} C$ $-T_{\beta} S$	$-T_{\zeta}$			
$-M_{q_i} 2C$	$-M_{q_i} 2C^2$ $M_{\dot{q}_i} 2CS$	$-M_{q_i} 2CS$ $-M_{\dot{q}_i} 2C^2$	$-M_{p_i} 2C$	$-M_{p_i} 2C^2$	$-M_{p_i} 2CS$	$M_{\dot{\beta}} 2CS$ $-M_{\beta} 2C^2$	$-M_{\dot{\beta}} 2C^2$ $-M_{\beta} 2CS$	$-M_{\zeta} 2C$			
$-M_{q_i} 2S$	$-M_{q_i} 2CS$ $M_{\dot{q}_i} 2S^2$	$-M_{q_i} 2C^2$ $-M_{\dot{q}_i} 2CS$	$-M_{p_i} 2S$	$-M_{p_i} 2CS$	$-M_{p_i} 2S^2$	$M_{\dot{\beta}} 2S^2$ $-M_{\beta} 2CS$	$-M_{\dot{\beta}} 2CS$ $-M_{\beta} 2S^2$	$-M_{\zeta} 2S$			

$$
\tilde{A}_1 = \gamma \frac{1}{N} \sum_m \begin{bmatrix}
M_{q_k\mu}S & -M_{q_k\mu}C & -M_{q_k\lambda} & -M_{q_k\dot{\beta}}S & M_{q_k\dot{\beta}}C & -M_{q_k\dot{\zeta}} \\
M_{q_k\mu}2CS & -M_{q_k\mu}2C^2 & -M_{q_k\lambda}2C & -M_{q_k\dot{\beta}}2CS & M_{q_k\dot{\beta}}2C^2 & -M_{q_k\dot{\zeta}}2C \\
M_{q_k\mu}2S^2 & -M_{q_k\mu}2CS & -M_{q_k\lambda}2S & -M_{q_k\dot{\beta}}2S^2 & M_{q_k\dot{\beta}}2CS & -M_{q_k\dot{\zeta}}2S \\
M_{p_k\mu}S & -M_{p_k\mu}C & -M_{p_k\lambda} & -M_{p_k\dot{\beta}}S & M_{p_k\dot{\beta}}C & -M_{p_k\dot{\zeta}} \\
M_{p_k\mu}2CS & -M_{p_k\mu}2C^2 & -M_{p_k\lambda}2C & -M_{p_k\dot{\beta}}2CS & M_{p_k\dot{\beta}}2C^2 & -M_{p_k\dot{\zeta}}2C \\
M_{p_k\mu}2S^2 & -M_{p_k\mu}2CS & -M_{p_k\lambda}2S & -M_{p_k\dot{\beta}}2S^2 & M_{p_k\dot{\beta}}2CS & -M_{p_k\dot{\zeta}}2S \\
M_{\mu}2CS & -M_{\mu}2C^2 & -M_{\lambda}2C & -M_{\dot{\beta}}2CS & M_{\dot{\beta}}2C^2 & -M_{\dot{\zeta}}2C \\
M_{\mu}2S^2 & -M_{\mu}2CS & -M_{\lambda}2S & -M_{\dot{\beta}}2S^2 & M_{\dot{\beta}}2CS & -M_{\dot{\zeta}}2S \\
-Q_{\mu}S & Q_{\mu}C & Q_{\lambda} & Q_{\dot{\beta}}S & -Q_{\dot{\beta}}C & Q_{\dot{\zeta}} \\
T_{\mu}S & -T_{\mu}C & -T_{\lambda} & -T_{\dot{\beta}}S & T_{\dot{\beta}}C & -T_{\dot{\zeta}} \\
M_{\mu}2CS & -M_{\mu}2C^2 & -M_{\lambda}2C & -M_{\dot{\beta}}2CS & M_{\dot{\beta}}2C^2 & -M_{\dot{\zeta}}2C \\
M_{\mu}2S^2 & -M_{\mu}2CS & -M_{\lambda}2S & -M_{\dot{\beta}}2S^2 & M_{\dot{\beta}}2CS & -M_{\dot{\zeta}}2S
\end{bmatrix}
$$

$$\tilde{A}_o = \gamma \frac{1}{N} \sum_m \begin{bmatrix}
 & & & -\lambda M_{q_k\mu} C & \mu M_{q_k\lambda} - \lambda M_{q_k\mu} S & -M_{q_k\zeta} \\
 & & & -\lambda M_{q_k\mu} 2C^2 & \mu M_{q_k\lambda} 2C - \lambda M_{q_k\mu} 2CS & -M_{q_k\zeta} 2C \\
 & & & -\lambda M_{q_k\mu} 2CS & \mu M_{q_k\lambda} 2S - \lambda M_{q_k\mu} 2S^2 & -M_{q_k\zeta} 2S \\
 & & & -\lambda M_{p_k\mu} C & \mu M_{p_k\lambda} - \lambda M_{p_k\mu} S & -M_{p_k\zeta} \\
 & & & -\lambda M_{p_k\mu} 2C^2 & \mu M_{p_k\lambda} 2C - \lambda M_{p_k\mu} 2CS & -M_{p_k\zeta} 2C \\
 & & & -\lambda M_{p_k\mu} 2CS & \mu M_{p_k\lambda} 2S - \lambda M_{p_k\mu} 2S^2 & -M_{p_k\zeta} 2S \\
 & & & -\lambda M_{\mu} 2C^2 & \mu M_{\lambda} 2C - \lambda M_{\mu} 2CS & -M_{\zeta} 2C \\
 & & & -\lambda M_{\mu} 2CS & \mu M_{\lambda} 2S - \lambda M_{\mu} 2S^2 & -M_{\zeta} 2S \\
 & & & \lambda Q_{\mu} C & -\mu Q_{\lambda} \quad \lambda Q_{\mu} S & Q_{\zeta} \\
 & & & -\lambda T_{\mu} C & \mu T_{\lambda} - \lambda T_{\mu} S & -T_{\zeta} \\
 & & & -\lambda M_{\mu} 2C^2 & \mu M_{\lambda} 2C - \lambda M_{\mu} 2CS & -M_{\zeta} 2C \\
 & & & -\lambda M_{\mu} 2CS & \mu M_{\lambda} 2S - \lambda M_{\mu} 2S^2 & -M_{\zeta} 2S
\end{bmatrix}$$

$$B_G = \gamma \frac{1}{N} \sum_m \begin{bmatrix} M_{q_k}\mu S & M_{q_k}\mu C & -M_{q_k}\lambda \\ M_{q_k}\mu 2CS & M_{q_k}\mu 2C^2 & -M_{q_k}\lambda 2C \\ M_{q_k}\mu 2S^2 & M_{q_k}\mu 2CS & -M_{q_k}\lambda 2S \\ M_{p_k}\mu S & M_{p_k}\mu C & -M_{p_k}\lambda \\ M_{p_k}\mu 2CS & M_{p_k}\mu 2C^2 & -M_{p_k}\lambda 2C \\ M_{p_k}\mu 2S^2 & M_{p_k}\mu 2CS & -M_{p_k}\lambda 2S \\ M_\mu 2CS & M_\mu 2C^2 & -M_\lambda 2C \\ M_\mu 2S^2 & M_\mu 2CS & -M_\lambda 2S \\ -Q_\mu S & -Q_\mu C & Q_\lambda \\ T_\mu S & T_\mu C & -T_\lambda \\ M_\mu 2CS & M_\mu 2C^2 & -M_\lambda 2C \\ M_\mu 2S^2 & M_\mu 2CS & -M_\lambda 2S \end{bmatrix}$$

$$C_1 = \begin{bmatrix}
T_{\dot{q}_i} & T_{\dot{q}_i}C & T_{\dot{q}_i}S & & & & T_{\dot{\beta}}C & T_{\dot{\beta}}S & T_{\dot{\zeta}} & T_{\lambda} & T_{\dot{\beta}}C & T_{\dot{\beta}}S \\
\hline
\begin{matrix} H_{\dot{q}_i}2S \\ R_{\dot{q}_i}2C \end{matrix} & \begin{matrix} H_{\dot{q}_i}2CS \\ R_{\dot{q}_i}2C^2 \end{matrix} & \begin{matrix} H_{\dot{q}_i}2S^2 \\ R_{\dot{q}_i}2CS \end{matrix} & & & & \begin{matrix} H_{\dot{\beta}}2CS \\ R_{\dot{\beta}}2C^2 \end{matrix} & \begin{matrix} H_{\dot{\beta}}2S^2 \\ R_{\dot{\beta}}2CS \end{matrix} & \begin{matrix} H_{\dot{\zeta}}2S \\ R_{\dot{\zeta}}2C \end{matrix} & \begin{matrix} H_{\lambda}2S \\ R_{\lambda}2C \end{matrix} & \begin{matrix} H_{\dot{\beta}}2CS \\ R_{\dot{\beta}}2C^2 \end{matrix} & \begin{matrix} H_{\dot{\beta}}2S^2 \\ R_{\dot{\beta}}2CS \end{matrix} \\
\hline
\begin{matrix} H_{\dot{q}_i}2C \\ -R_{\dot{q}_i}2S \end{matrix} & \begin{matrix} H_{\dot{q}_i}2C^2 \\ -R_{\dot{q}_i}2CS \end{matrix} & \begin{matrix} H_{\dot{q}_i}2CS \\ -R_{\dot{q}_i}2S^2 \end{matrix} & & & & \begin{matrix} H_{\dot{\beta}}2C^2 \\ -R_{\dot{\beta}}2CS \end{matrix} & \begin{matrix} H_{\dot{\beta}}2CS \\ -R_{\dot{\beta}}2S^2 \end{matrix} & \begin{matrix} H_{\dot{\zeta}}2C \\ -R_{\dot{\zeta}}2S \end{matrix} & \begin{matrix} H_{\lambda}2C \\ -R_{\lambda}2S \end{matrix} & \begin{matrix} H_{\dot{\beta}}2C^2 \\ -R_{\dot{\beta}}2CS \end{matrix} & \begin{matrix} H_{\dot{\beta}}2CS \\ -R_{\dot{\beta}}2S^2 \end{matrix} \\
\hline
Q_{\dot{q}_i} & Q_{\dot{q}_i}C & Q_{\dot{q}_i}S & & & & Q_{\dot{\beta}}C & Q_{\dot{\beta}}S & Q_{\dot{\zeta}} & Q_{\lambda} & Q_{\dot{\beta}}C & Q_{\dot{\beta}}S \\
\hline
-M_{\dot{q}_i}2C & -M_{\dot{q}_i}2C^2 & -M_{\dot{q}_i}2CS & & & & -M_{\dot{\beta}}2C^2 & -M_{\dot{\beta}}2CS & -M_{\dot{\zeta}}2C & -M_{\lambda}2C & -M_{\dot{\beta}}2C^2 & -M_{\dot{\beta}}2CS \\
\hline
-M_{\dot{q}_i}2S & -M_{\dot{q}_i}2CS & -M_{\dot{q}_i}2S^2 & & & & -M_{\dot{\beta}}2CS & -M_{\dot{\beta}}2S^2 & -M_{\dot{\zeta}}2S & -M_{\lambda}2S & -M_{\dot{\beta}}2CS & -M_{\dot{\beta}}2S^2
\end{bmatrix}$$

$$C_o = \gamma \frac{1}{N} \sum_m \begin{bmatrix}
T_{q_i} & \begin{matrix} -T_{\dot{q}_i} S \\ T_{q_i} C \end{matrix} & \begin{matrix} T_{\dot{q}_i} C \\ T_{q_i} S \end{matrix} & T_{p_i} & T_{p_i} C & T_{p_i} S & \begin{matrix} -T_{\dot{\beta}} S \\ T_{\beta} C \end{matrix} & \begin{matrix} T_{\dot{\beta}} C \\ T_{\beta} S \end{matrix} & T_{\zeta} & & & \\
\begin{matrix} H_{q_i} 2S \\ R_{q_i} 2C \end{matrix} & \begin{matrix} -H_{\dot{q}_i} 2S^2 \\ H_{q_i} 2CS \\ -R_{\dot{q}_i} 2CS \\ R_{q_i} 2C^2 \end{matrix} & \begin{matrix} H_{\dot{q}_i} 2CS \\ H_{q_i} 2S^2 \\ R_{\dot{q}_i} 2C^2 \\ R_{q_i} 2CS \end{matrix} & \begin{matrix} H_{p_i} 2S \\ R_{p_i} 2C \end{matrix} & \begin{matrix} H_{p_i} 2CS \\ R_{p_i} 2C^2 \end{matrix} & \begin{matrix} H_{p_i} 2S^2 \\ R_{p_i} 2CS \end{matrix} & \begin{matrix} -H_{\dot{\beta}} 2S^2 \\ H_{\beta} 2CS \\ -R_{\dot{\beta}} 2CS \\ R_{\beta} 2C^2 \end{matrix} & \begin{matrix} H_{\dot{\beta}} 2CS \\ H_{\beta} 2S^2 \\ R_{\dot{\beta}} 2C^2 \\ R_{\beta} 2CS \end{matrix} & \begin{matrix} H_{\zeta} 2S \\ R_{\zeta} 2C \end{matrix} & & & \\
\begin{matrix} H_{q_i} 2C \\ -R_{q_i} 2S \end{matrix} & \begin{matrix} -H_{\dot{q}_i} 2CS \\ H_{q_i} 2C^2 \\ +R_{\dot{q}_i} 2S^2 \\ -R_{q_i} 2CS \end{matrix} & \begin{matrix} H_{\dot{q}_i} 2C^2 \\ H_{q_i} 2CS \\ -R_{\dot{q}_i} 2CS \\ -R_{q_i} 2S^2 \end{matrix} & \begin{matrix} H_{p_i} 2C \\ -R_{p_i} 2S \end{matrix} & \begin{matrix} H_{p_i} 2C^2 \\ -R_{p_i} 2CS \end{matrix} & \begin{matrix} H_{p_i} 2CS \\ -R_{p_i} 2S^2 \end{matrix} & \begin{matrix} -H_{\dot{\beta}} 2CS \\ H_{\beta} 2C^2 \\ +R_{\dot{\beta}} 2S^2 \\ -R_{\beta} 2CS \end{matrix} & \begin{matrix} H_{\dot{\beta}} 2C^2 \\ H_{\beta} 2CS \\ -R_{\dot{\beta}} 2CS \\ -R_{\beta} 2S^2 \end{matrix} & \begin{matrix} H_{\zeta} 2C \\ -R_{\zeta} 2S \end{matrix} & & & \\
Q_{q_i} & \begin{matrix} -Q_{\dot{q}_i} S \\ Q_{q_i} C \end{matrix} & \begin{matrix} Q_{\dot{q}_i} C \\ Q_{q_i} S \end{matrix} & Q_{p_i} & Q_{p_i} C & Q_{p_i} S & \begin{matrix} -Q_{\dot{\beta}} S \\ Q_{\beta} C \end{matrix} & \begin{matrix} Q_{\dot{\beta}} C \\ Q_{\beta} S \end{matrix} & Q_{\zeta} & & & \\
-M_{q_i} 2C & \begin{matrix} M_{\dot{q}_i} 2CS \\ -M_{q_i} 2C^2 \end{matrix} & \begin{matrix} -M_{\dot{q}_i} 2C^2 \\ -M_{q_i} 2CS \end{matrix} & -M_{p_i} 2C & -M_{p_i} 2C^2 & -M_{p_i} 2CS & \begin{matrix} M_{\dot{\beta}} 2CS \\ -M_{\beta} 2C^2 \end{matrix} & \begin{matrix} -M_{\dot{\beta}} 2C^2 \\ -M_{\beta} 2CS \end{matrix} & -M_{\zeta} 2C & & & \\
-M_{q_i} 2S & \begin{matrix} M_{\dot{q}_i} 2S^2 \\ -M_{q_i} 2CS \end{matrix} & \begin{matrix} -M_{\dot{q}_i} 2CS \\ -M_{q_i} 2S^2 \end{matrix} & -M_{p_i} 2S & -M_{p_i} 2CS & -M_{p_i} 2S^2 & \begin{matrix} M_{\dot{\beta}} 2S^2 \\ -M_{\beta} 2CS \end{matrix} & \begin{matrix} -M_{\dot{\beta}} 2CS \\ -M_{\beta} 2S^2 \end{matrix} & -M_{\zeta} 2S & & & \end{bmatrix}$$

$$\tilde{C}_1 = \gamma \frac{1}{N} \sum_m \begin{bmatrix} -T_\mu S & T_\mu C & T_\lambda & T_{\dot\beta} S & -T_{\dot\beta} C & T_{\dot\zeta} \\ \hline \begin{matrix} -H_\mu 2S^2 \\ -R_\mu 2C^2 \\ -R_r 2CS \end{matrix} & \begin{matrix} H_\mu 2CS \\ -R_\mu 2CS \\ R_r 2C^2 \end{matrix} & \begin{matrix} H_\lambda 2S \\ R_\lambda 2C \end{matrix} & \begin{matrix} H_{\dot\beta} 2S^2 \\ R_{\dot\beta} 2CS \end{matrix} & \begin{matrix} -H_{\dot\beta} 2CS \\ -R_{\dot\beta} 2C^2 \end{matrix} & \begin{matrix} H_{\dot\zeta} 2S \\ R_{\dot\zeta} 2C \end{matrix} \\ \hline \begin{matrix} -H_\mu 2CS \\ R_\mu 2CS \\ R_r 2S^2 \end{matrix} & \begin{matrix} H_\mu 2C^2 \\ R_\mu 2S^2 \\ -R_r 2CS \end{matrix} & \begin{matrix} H_\lambda 2C \\ -R_\lambda 2S \end{matrix} & \begin{matrix} H_{\dot\beta} 2CS \\ -R_{\dot\beta} 2S^2 \end{matrix} & \begin{matrix} -H_{\dot\beta} 2C^2 \\ R_{\dot\beta} 2CS \end{matrix} & \begin{matrix} H_{\dot\zeta} 2C \\ -R_{\dot\zeta} 2S \end{matrix} \\ \hline -Q_\mu S & Q_\mu C & Q_\lambda & Q_{\dot\beta} S & -Q_{\dot\beta} C & Q_{\dot\zeta} \\ \hline M_\mu 2CS & -M_\mu 2C^2 & -M_\lambda 2C & -M_{\dot\beta} 2CS & +M_{\dot\beta} 2C^2 & -M_{\dot\zeta} 2C \\ \hline M_\mu 2S^2 & -M_\mu 2CS & -M_\lambda 2S & -M_{\dot\beta} 2S^2 & M_{\dot\beta} 2CS & -M_{\dot\zeta} 2S \end{bmatrix}$$

$$\tilde{C}_o = \gamma \frac{1}{N} \sum_m \begin{bmatrix}
 & & & \lambda T_\mu C & -\mu T_\lambda \\ & & & & \lambda T_\mu S & T_\zeta \\
\hline
 & & & \lambda H_\mu 2CS & \lambda R_\mu 2C^2 \\ & & & -\lambda R_\mu 2CS & -\mu H_\lambda 2S & H_\zeta 2S \\ & & & \lambda R_r 2C^2 & \lambda H_\mu 2S^2 & R_\zeta 2C \\ & & & & -\mu R_\lambda 2C \\ & & & & \lambda R_r 2CS \\
\hline
 & & & \lambda H_\mu 2C^2 & -\lambda R_\mu 2CS \\ & & & \lambda R_\mu 2S^2 & -\mu H_\lambda 2C & H_\zeta 2C \\ & & & -\lambda R_r 2CS & \lambda H_\mu 2CS & -R_\zeta 2S \\ & & & & \mu R_\lambda 2S \\ & & & & -\lambda R_r 2S^2 \\
\hline
 & & & \lambda Q_\mu C & -\mu Q_\lambda \\ & & & & \lambda Q_\mu S & Q_\zeta \\
\hline
 & & & -\lambda M_\mu 2C^2 & \mu M_\lambda 2C \\ & & & & -\lambda M_\mu 2CS & -M_\zeta 2C \\
\hline
 & & & -\lambda M_\mu 2CS & \mu M_\lambda 2S \\ & & & & -\lambda M_\mu 2S^2 & -M_\zeta 2S
\end{bmatrix}$$

$$D_G = \gamma \frac{1}{N} \sum_m \begin{bmatrix} T_\mu S & T_\mu C & -T_\lambda \\ \hline H_\mu 2S^2 + R_\mu 2C^2 + R_r 2CS & H_\mu 2CS - R_\mu 2CS + R_r 2C^2 & -H_\lambda 2S - R_\lambda 2C \\ \hline H_\mu 2CS - R_\mu 2CS - R_r 2S^2 & H_\mu 2C^2 + R_\mu 2S^2 - R_r 2CS & -H_\lambda 2C + R_\lambda 2S \\ \hline Q_\mu S & Q_\mu C & -Q_\lambda \\ \hline -M_\mu 2CS & -M_\mu 2C^2 & M_\lambda 2C \\ \hline -M_\mu 2S^2 & -M_\mu 2CS & M_\lambda 2S \end{bmatrix}$$

B4. INERTIAL MATRICES FOR ROTOR WITH FOUR OR MORE BLADES

The inertial matrices for the equations of motion of a rotor with four or more blades (see section 4.1) are given below.

$$A_2 = \left[\begin{array}{c|c|c|c|c|c}
I_{q_k} & & & -S_{q_k\ddot{p}_i} & & \\
\hline
 & I_{q_k} & & & -S_{q_k\ddot{p}_i} & \\
\hline
 & & I_{q_k} & & & -S_{q_k\ddot{p}_i} \\
\hline
-S_{p_k\ddot{q}_i} & & & I_{p_k} + I_{p_k\ddot{p}_i} & & \\
\hline
 & -S_{p_k\ddot{q}_i} & & & I_{p_k} + I_{p_k\ddot{p}_i} & \\
\hline
 & & -S_{p_k\ddot{q}_i} & & & I_{p_k} + I_{p_k\ddot{p}_i}
\end{array}\right]$$

$$
A_1 = \begin{bmatrix}
I_{q_k} g_s \nu_k + 2I_{q_k}\dot{q}_i & 2nI_{q_k} & & & -2nS_{q_k}\ddot{p}_i & \\
-2nI_{q_k} & I_{q_k} g_s \nu_k + 2I_{q_k}\dot{q}_i & & 2nS_{q_k}\ddot{p}_i & & \\
 & & I_{q_k} g_s \nu_k + 2I_{q_k}\dot{q}_i & & & \\
 & -2nS_{p_k}\ddot{q}_i & & I_{p_k} g_s \omega_k & 2nI_{p_k} + 2nI_{p_k}\ddot{p}_i & \\
2nS_{p_k}\ddot{q}_i & & & -2nI_{p_k} - 2nI_{p_k}\ddot{p}_i & I_{p_k} g_s \omega_k & \\
 & & & & & I_{p_k} g_s \omega_k
\end{bmatrix}
$$

$$
A_o = \begin{bmatrix}
I_{q_k}(\nu_k^2-n^2) & nI_{q_k}g_s\nu_k + n2I_{q_k}\dot{q}_i & & -S_{q_kp_i} + n^2S_{q_k\ddot{p}_i} & & \\
-nI_{q_k}g_s\nu_k - n2I_{q_k}\dot{q}_i & I_{q_k}(\nu_k^2-n^2) & & & -S_{q_kp_i} + n^2S_{q_k\ddot{p}_i} & \\
 & & I_{q_k}\nu_k^2 & & & -S_{q_kp_i} \\
-S_{p_kq_i} + n^2S_{p_k\ddot{q}_i} & & & I_{p_k}(\omega_k^2-n^2) + I_{p_kp_i} - n^2I_{p_k\ddot{p}_i} & nI_{p_k}g_s\omega_k & \\
 & -S_{p_kq_i} + n^2S_{p_k\ddot{q}_i} & & -nI_{p_k}g_s\omega_k & I_{p_k}(\omega_k^2-n^2) + I_{p_kp_i} - n^2I_{p_k\ddot{p}_i} & \\
 & & -S_{p_kq_i} & & & I_{p_k}\omega_k^2 + I_{p_kp_i}
\end{bmatrix}
$$

$$B = \begin{bmatrix} & & \\ & & \\ & & \\ I_{p_o}\omega_o^2\xi_k(r_{FA}) & & \\ & I_{p_o}\omega_o^2\xi_k(r_{FA}) & \\ & & I_{p_o}\omega_o^2\xi_k(r_{FA}) \end{bmatrix}$$

$$M_{aero} = \gamma \begin{bmatrix} \frac{M_{\beta_{nc}}}{ac} \\ \frac{M_{\beta_{ns}}}{ac} \\ \frac{M_{\beta_{(N/2)}}}{ac} \\ \frac{M_{\theta_{nc}}}{ac} \\ \frac{M_{\theta_{ns}}}{ac} \\ \frac{M_{\theta_{(N/2)}}}{ac} \end{bmatrix} = \gamma \begin{bmatrix} \frac{2}{N}\sum_m \frac{M_{q_k}}{ac} \sin n\psi_m \\ \frac{2}{N}\sum_m \frac{M_{q_k}}{ac} \cos n\psi_m \\ \frac{1}{N}\sum_m \frac{M_{q_k}}{ac} (-1)^m \\ \frac{2}{N}\sum_m \frac{M_{p_k}}{ac} \cos n\psi_m \\ \frac{2}{N}\sum_m \frac{M_{p_k}}{ac} \sin n\psi_m \\ \frac{1}{N}\sum_m \frac{M_{p_k}}{ac} (-1)^m \end{bmatrix}$$

B5. AERODYNAMIC MATRICES FOR ROTOR WITH FOUR OR MORE BLADES IN AXIAL FLOW

The aerodynamic matrices for the equations of motion of a rotor with four or more blades in axial flow (see section 4.1) are given below.

$$A_1 = \begin{bmatrix} -\gamma M_{q_k \dot{q}_i} & & & & & \\ & -\gamma M_{q_k \dot{q}_i} & & & & \\ & & -\gamma M_{q_i \dot{q}_i} & & & \\ -\gamma M_{p_k \dot{q}_i} & & & -\gamma M_{p_k \dot{p}_i} & & \\ & -\gamma M_{p_k \dot{q}_i} & & & -\gamma M_{p_k \dot{p}_i} & \\ & & -\gamma M_{p_k \dot{q}_i} & & & -\gamma M_{p_k \dot{p}_i} \end{bmatrix}$$

$$A_o = \begin{bmatrix} -\gamma M_{q_k q_i} & -n\gamma M_{q_k \dot{q}_i} & & -\gamma M_{q_k p_i} & & \\ n\gamma M_{q_k \dot{q}_i} & -\gamma M_{q_k q_i} & & & -\gamma M_{q_i p_i} & \\ & & -\gamma M_{q_k q_i} & & & -\gamma M_{q_k p_i} \\ -\gamma M_{p_k q_i} & -n\gamma M_{p_k \dot{q}_i} & & -\gamma M_{p_k p_i} & -n\gamma M_{p_k \dot{p}_i} & \\ n\gamma M_{p_k \dot{q}_i} & -\gamma M_{p_k q_i} & & n\gamma M_{p_k \dot{p}_i} & -\gamma M_{p_k p_i} & \\ & & -\gamma M_{p_k q_i} & & & -\gamma M_{p_k p_i} \end{bmatrix}$$

B6. INERTIAL MATRICES FOR TWO-BLADED ROTOR

The inertial matrices for the two-bladed rotor equations of motion (see section 4.2) are given below. The notation $C = \cos \psi_m$ and $S = \sin \psi_m$ is used, where $\psi_m = \psi + m\pi$.

$$
A_2 = \frac{1}{N}\sum_m \begin{bmatrix}
I_{q_k} & & -S_{q_k\ddot{p}_i} & -S_{q_k\ddot{p}_i}(-1)^m & & I_{q_k\alpha}\cdot\vec{k}_B & & & \\
 & I_{q_k} & -S_{q_k\ddot{p}_i}(-1)^m & -S_{q_k\ddot{p}_i} & I_{q_k\alpha}\cdot\vec{i}_B & & & & \\
-S_{p_k\ddot{q}_i} & -S_{p_k\ddot{q}_i}(-1)^m & I_{p_k}+I_{p_k\ddot{p}_i} & I_{p_k\ddot{p}_i}(-1)^m & -I_{p_k\alpha}\cdot\vec{k}_B(-1)^m & I_{p_k\alpha}\cdot\vec{i}_B & & & \\
-S_{p_k\ddot{q}_i}(-1)^m & -S_{p_k\ddot{q}_i} & I_{p_k\ddot{p}_i}(-1)^m & I_{p_k}+I_{p_k\ddot{p}_i} & -I_{p_k\alpha}\cdot\vec{k}_B & I_{p_k\alpha}\cdot\vec{i}_B(-1)^m & & & \\
 & I_{q_i\alpha}\cdot\vec{i}_B & -S_{p_i\alpha}\cdot\vec{i}_B(-1)^m & -S_{p_i\alpha}\cdot\vec{i}_B & I_o & & & & \\
I_{q_i\alpha}\cdot\vec{k}_B & & -S_{p_i\alpha}\cdot\vec{k}_B & -S_{p_i\alpha}\cdot\vec{k}_B(-1)^m & & I_o+r_E^2 I_E & & & \\
 & & & & & & \gamma\frac{k_o}{\sigma a} & & \\
 & & & & & & & \gamma\frac{2k_C}{\sigma a} & \\
 & & & & & & & & \gamma\frac{2k_S}{\sigma a}
\end{bmatrix}
$$

$$A_1 = \frac{1}{N}\sum_m \begin{bmatrix}
I_{q_k} g_s \nu_k + 2I_{q_k \dot{q}_i} & 2I_{q_k \dot{q}_i}(-1)^m & & & -2I_{\dot{q}_k \alpha}(-1)^m & 2I_{q_k \dot{\psi}} & & & \\
2I_{q_k \dot{q}_i}(-1)^m & I_{q_k} g_s \nu_k + 2I_{q_k \dot{q}_i} & & & -2I_{\dot{q}_k \alpha} & 2I_{q_k \dot{\psi}}(-1)^m & & & \\
 & & I_{p_k} g_s \omega_k & & -2S_{p_k \ddot{\alpha}}(-1)^m & & & & \\
 & & & I_{p_k} g_s \omega_k & -2S_{p_k \ddot{\alpha}} & & & & \\
2I_{\dot{q}_i \alpha}(-1)^m & 2I_{\dot{q}_i \alpha} & & & I_o C_T & 2I_{\dot{q}_o \alpha}(-1)^m & & & \\
-2I_{\dot{q}_i \psi} & -2I_{\dot{q}_i \psi}(-1)^m & & & -2I_{\dot{q}_o \alpha}(-1)^m & Q_\Omega r_E^2 & & & \\
 & & & & & & \frac{2\gamma}{\sigma a}\left(\lambda_o + \sqrt{\mu^2+\lambda_o^2}\right) & & \\
 & & & & & & & \frac{\gamma}{\sigma a}\sqrt{\mu^2+\lambda_o^2} & \\
 & & & & & & & & \frac{\gamma}{\sigma a}\sqrt{\mu^2+\lambda_o^2}
\end{bmatrix}$$

$$A_o = \frac{1}{N}\sum_m \begin{bmatrix}
I_{q_k}\nu_k^2 & & -S_{q_k p_i} & -S_{q_k p_i}(-1)^m & & & & & \\
 & I_{q_k}\nu_k^2 & -S_{q_k p_i}(-1)^m & -S_{q_k p_i} & I_{q_k\alpha}\cdot\vec{i}_B & & & & \\
-S_{p_k q_i} & -S_{p_k q_i}(-1)^m & I_{p_k}\omega_k^2 + I_{p_k p_i} & & -I_{p_k\alpha}\cdot\vec{k}_B(-1)^m & & & & \\
-S_{p_k q_i}(-1)^m & -S_{p_k q_i} & & I_{p_k}\omega_k^2 + I_{p_k p_i} & S_{p_k o}K_{P_T} - I_{p_k\alpha}\cdot\vec{k}_B & S_{p_k o}(\theta_{1C}S - \theta_{1S}C)(-1)^m & & & \\
 & I_{q_i\alpha}\cdot\vec{i}_B & -S_{p_i\alpha}\cdot\vec{i}_B(-1)^m & -S_{p_i\alpha}\cdot\vec{i}_B & I_o\nu_T^2 & & & & \\
 & & & & & & & & \\
 & & & & & & & & \\
 & & & & & & & & \\
 & & & & & & & & \\
\end{bmatrix}$$

$$\tilde{A}_2 = \frac{1}{N}\sum_m \begin{bmatrix}
 & & S_{q_k}\cdot\vec{i}_B & & & I_{q_k\alpha}\cdot\vec{k}_B \\
-S_{q_k}\cdot\vec{k}_B S(-1)^m & S_{q_k}\cdot\vec{k}_B C(-1)^m & & I_{q_k\alpha}\cdot\vec{i}_B S(-1)^m & -I_{q_k\alpha}\cdot\vec{i}_B C(-1)^m & \\
-S_{p_k}\cdot\vec{i}_B S & S_{p_k}\cdot\vec{i}_B C & -S_{p_k}\cdot\vec{k}_B & -I_{p_k\alpha}\cdot\vec{k}_B S & I_{p_k\alpha}\cdot\vec{k}_B C & I_{p_k\alpha}\cdot\vec{i}_B \\
-S_{p_k}\cdot\vec{i}_B S(-1)^m & S_{p_k}\cdot\vec{i}_B C(-1)^m & -S_{p_k}\cdot\vec{k}_B(-1)^m & -I_{p_k\alpha}\cdot\vec{k}_B S(-1)^m & I_{p_k\alpha}\cdot\vec{k}_B C(-1)^m & I_{p_k\alpha}\cdot\vec{i}_B(-1)^m \\
 & & & I_o S(-1)^m & -I_o C(-1)^m & \\
 & & & & & I_o \\
 & & & & & \\
 & & & & & \\
 & & & & &
\end{bmatrix}$$

$$\tilde{A}_1 = \frac{1}{N}\sum_m \begin{bmatrix} & & & & & 2I_{q_k}\dot{\psi} \\ & & & 2I_{q_k\alpha}\cdot\vec{i}_B C(-1)^m & 2I_{q_k\alpha}\cdot\vec{i}_B S(-1)^m & 2I_{q_k\dot{\psi}}(-1)^m \\ & & & -2I_{p_k\alpha}\cdot\vec{k}_B C & -2I_{p_k\alpha}\cdot\vec{k}_B S & \\ & & & -2I_{p_k\alpha}\cdot k_B C(-1)^m & -2I_{p_k\alpha}\cdot\vec{k}_B S(-1)^m & \\ & & & 2I_o C(-1)^m & 2I_o S(-1)^m & \\ & & & & & \\ & & & & & \\ & & & & & \\ & & & & & \end{bmatrix}$$

$$B = \left[\begin{array}{c|c} & \\ \hline & \\ \hline I_{p_o}\omega_o^2\xi_k(r_{FA}) & \\ \hline & I_{p_o}\omega_o^2\xi_k(r_{FA}) \\ \hline & \\ \hline & \\ \hline & \\ \hline & \\ \hline & \end{array}\right]$$

$$C_2 = \frac{1}{N}\sum_m \begin{bmatrix} -S_{q_i}\cdot\vec{i}_B & & & & & & & & \\ & S_{q_i}\cdot\vec{k}_B 2S(-1)^m & & & & & & & \\ & S_{q_i}\cdot\vec{k}_B 2C(-1)^m & & & & & & & \\ I_{q_i\alpha}\cdot\vec{k}_B & & -S_{p_i\alpha}\cdot\vec{k}_B & -S_{p_i\alpha}\cdot\vec{k}_B(-1)^m & & I_o & & & \\ & I_{q_i\alpha}\cdot\vec{i}_B 2C(-1)^m & -S_{p_i\alpha}\cdot\vec{i}_B 2C & -S_{p_i\alpha}\cdot\vec{i}_B 2C(-1)^m & 2I_o C(-1)^m & & & & \\ & I_{q_i\alpha}\cdot\vec{i}_B 2S(-1)^m & -S_{p_i\alpha}\cdot\vec{i}_B 2S & -S_{p_i\alpha}\cdot\vec{i}_B 2S(-1)^m & 2I_o S(-1)^m & & & & \end{bmatrix}$$

$$C_1 = \frac{1}{N}\sum_m \begin{bmatrix} & & & & & & & & \\ & S_{q_i}\cdot\vec{k}_B 4C(-1)^m & & & & & & & \\ & -S_{q_i}\cdot\vec{k}_B 4S(-1)^m & & & & & & & \\ -2I_{\dot{q}_i\psi} & -2I_{\dot{q}_i\psi}(-1)^m & & & -2I_{\dot{q}_o\alpha}(-1)^m & & & & \\ 4I_{\dot{q}_i\alpha}C & 4I_{\dot{q}_i\alpha}C(-1)^m & & & & 4I_{\dot{q}_i o}C & & & \\ 4I_{\dot{q}_i\alpha}S & 4I_{\dot{q}_i\alpha}S(-1)^m & & & & 4I_{\dot{q}_i o}S & & & \end{bmatrix}$$

$$
C_o = \frac{1}{N}\sum_m \begin{bmatrix}
 & & & & & & & & \\
 & -S_{q_i}\cdot\vec{k}_B 2S(-1)^m & & & & & & & \\
 & -S_{q_i}\cdot\vec{k}_B 2C(-1)^m & & & & & & & \\
 & & & & & & & & \\
 & I_{q_i\alpha}\cdot\vec{i}_B 2C(-1)^m & -S_{p_i\alpha}\cdot\vec{i}_B 2C & -S_{p_i\alpha}\cdot\vec{i}_B 2C(-1)^m & 2I_o C(-1)^m & & & & \\
 & I_{q_i\alpha}\cdot\vec{i}_B 2S(-1)^m & -S_{p_i\alpha}\cdot\vec{i}_B 2S & -S_{p_i\alpha}\cdot\vec{i}_B 2S(-1)^m & 2I_o S(-1)^m & & & & \\
\end{bmatrix}
$$

$$\tilde{C}_2 = \frac{1}{N} \sum_m \begin{bmatrix} & & -M_b & & & \\ -2M_b & & & & & \\ & 2M_b & & & & \\ & & & & & I_o \\ & & & I_o 2CS & -I_o 2C^2 & \\ & & & I_o 2S^2 & -I_o 2CS & \end{bmatrix}$$

$$\tilde{C}_1 = \frac{1}{N} \sum_m \begin{bmatrix} & & & & & \\ & & & & & \\ & & & & & \\ & & & & & \\ & & & I_o 4C^2 & I_o 4CS & \\ & & & I_o 4CS & I_o 4S^2 & \end{bmatrix}$$

$$M_{aero} = \gamma \begin{bmatrix} \frac{M_{\beta_o}}{ac} \\ \hline \frac{M_{\beta_1}}{ac} \\ \hline \frac{M_{\theta_o}}{ac} \\ \hline \frac{M_{\theta_1}}{ac} \\ \hline \frac{M_T}{ac} \\ \hline -\frac{C_Q}{\sigma a} \\ \hline \frac{C_T}{\sigma a} \\ \hline -\frac{2C_{M_y}}{\sigma a} \\ \hline -\frac{2C_{M_x}}{\sigma a} \end{bmatrix} \qquad F_{aero} = \gamma \begin{bmatrix} \frac{C_T}{\sigma a} \\ \hline \frac{2C_H}{\sigma a} \\ \hline -\frac{2C_Y}{\sigma a} \\ \hline \frac{C_Q}{\sigma a} \\ \hline \frac{2C_{M_y}}{\sigma a} \\ \hline -\frac{2C_{M_x}}{\sigma a} \end{bmatrix}$$

B7. AERODYNAMIC MATRICES FOR TWO-BLADED ROTOR

The aerodynamic matrices for the two-bladed rotor equations of motion (see section 4.2) are given below. The notation $C = \cos \psi_m$ and $S = \sin \psi_m$ is used, where $\psi_m = \psi + m\pi$.

$$
A_1 = \gamma \frac{1}{N} \sum_m \begin{bmatrix}
-M_{q_k \dot{q}_i} & -M_{q_k \dot{q}_i}(-1)^m & & & -M_{q_k \dot{\beta}}(-1)^m & -M_{q_k \dot{\zeta}} & -M_{q_k \lambda} & -M_{q_k \dot{\beta}} C & -M_{q_k \dot{\beta}} S \\
-M_{q_k \dot{q}_i}(-1)^m & -M_{q_k \dot{q}_i} & & & -M_{q_k \dot{\beta}} & -M_{q_k \dot{\zeta}}(-1)^m & -M_{q_k \lambda}(-1)^m & -M_{q_k \dot{\beta}} C(-1)^m & -M_{q_k \dot{\beta}} S(-1)^m \\
-M_{p_k \dot{q}_i} & -M_{p_k \dot{q}_i}(-1)^m & -M_{p_k \dot{p}_i} & -M_{p_k \dot{p}_i}(-1)^m & -M_{p_k \dot{\beta}}(-1)^m & -M_{p_k \dot{\zeta}} & -M_{p_k \lambda} & -M_{p_k \dot{\beta}} C & -M_{p_k \dot{\beta}} S \\
-M_{p_k \dot{q}_i}(-1)^m & -M_{p_k \dot{q}_i} & -M_{p_k \dot{p}_i}(-1)^m & -M_{p_k \dot{p}_i} & -M_{p_k \dot{\beta}} & -M_{p_k \dot{\zeta}}(-1)^m & -M_{p_k \lambda}(-1)^m & -M_{p_k \dot{\beta}} C(-1)^m & -M_{p_k \dot{\beta}} S(-1)^m \\
-M_{\dot{q}_i}(-1)^m & -M_{\dot{q}_i} & & & -M_{\dot{\beta}} & -M_{\dot{\zeta}}(-1)^m & -M_{\lambda}(-1)^m & -M_{\dot{\beta}} C(-1)^m & -M_{\dot{\beta}} S(-1)^m \\
Q_{\dot{q}_i} & Q_{\dot{q}_i}(-1)^m & & & Q_{\dot{\beta}}(-1)^m & Q_{\dot{\zeta}} & Q_{\lambda} & Q_{\dot{\beta}} C & Q_{\dot{\beta}} S \\
-T_{\dot{q}_i} & -T_{\dot{q}_i}(-1)^m & & & -T_{\dot{\beta}}(-1)^m & -T_{\dot{\zeta}} & -T_{\lambda} & -T_{\dot{\beta}} C & -T_{\dot{\beta}} S \\
-M_{\dot{q}_i} 2C & -M_{\dot{q}_i} 2C(-1)^m & & & -M_{\dot{\beta}} 2C(-1)^m & -M_{\dot{\zeta}} 2C & -M_{\lambda} 2C & -M_{\dot{\beta}} 2C^2 & -M_{\dot{\beta}} 2CS \\
-M_{\dot{q}_i} 2S & -M_{\dot{q}_i} 2S(-1)^m & & & -M_{\dot{\beta}} 2S(-1)^m & -M_{\dot{\zeta}} 2S & -M_{\lambda} 2S & -M_{\dot{\beta}} 2CS & -M_{\dot{\beta}} 2S^2
\end{bmatrix}
$$

$$A_o = \gamma \frac{1}{N} \sum_m \begin{bmatrix}
-M_{q_k q_i} & -M_{q_k q_i}(-1)^m & -M_{q_k p_i} & -M_{q_k p_i}(-1)^m & -M_{q_k \beta}(-1)^m & -M_{q_k \zeta} & & & \\
-M_{q_k q_i}(-1)^m & -M_{q_k q_i} & -M_{q_k p_i}(-1)^m & -M_{q_k p_i} & -M_{q_k \beta} & -M_{q_k \zeta}(-1)^m & & & \\
-M_{p_k q_i} & -M_{p_k q_i}(-1)^m & -M_{p_k p_i} & -M_{p_k p_i}(-1)^m & -M_{p_k \beta}(-1)^m & -M_{p_k \zeta} & & & \\
-M_{p_k q_i}(-1)^m & -M_{p_k q_i} & -M_{p_k p_i}(-1)^m & -M_{p_k p_i} & -M_{p_k \beta} & -M_{p_k \zeta}(-1)^m & & & \\
-M_{q_i}(-1)^m & -M_{q_i} & -M_{p_i}(-1)^m & -M_{p_i} & -M_{\beta} & -M_{\zeta}(-1)^m & & & \\
Q_{q_i} & Q_{q_i}(-1)^m & Q_{p_i} & Q_{p_i}(-1)^m & Q_{\beta}(-1)^m & Q_{\zeta} & & & \\
-T_{q_i} & -T_{q_i}(-1)^m & -T_{p_i} & -T_{p_i}(-1)^m & -T_{\beta}(-1)^m & -T_{\zeta} & & & \\
-M_{q_i} 2C & -M_{q_i} 2C(-1)^m & -M_{p_i} 2C & -M_{p_i} 2C(-1)^m & -M_{\beta} 2C(-1)^m & -M_{\zeta} 2C & & & \\
-M_{q_i} 2S & -M_{q_i} 2S(-1)^m & -M_{p_i} 2S & -M_{p_i} 2S(-1)^m & -M_{\beta} 2S(-1)^m & -M_{\zeta} 2S & & &
\end{bmatrix}$$

$$
\tilde{A}_1 = \gamma \frac{1}{N} \sum_m \begin{bmatrix}
M_{q_k\mu}S & -M_{q_k\mu}C & -M_{q_k\lambda} & -M_{q_k\dot{\beta}}S & M_{q_k\dot{\beta}}C & -M_{q_k\dot{\zeta}} \\
M_{q_k\mu}S(-1)^m & -M_{q_k\mu}C(-1)^m & -M_{q_k\lambda}(-1)^m & -M_{q_k\dot{\beta}}S(-1)^m & M_{q_k\dot{\beta}}C(-1)^m & -M_{q_k\dot{\zeta}}(-1)^m \\
M_{p_k\mu}S & -M_{p_k\mu}C & -M_{p_k\lambda} & -M_{p_k\dot{\beta}}S & M_{p_k\dot{\beta}}C & -M_{p_k\dot{\zeta}} \\
M_{p_k\mu}S(-1)^m & -M_{p_k\mu}C(-1)^m & -M_{p_k\lambda}(-1)^m & -M_{p_k\dot{\beta}}S(-1)^m & M_{p_k\dot{\beta}}C(-1)^m & -M_{p_k\dot{\zeta}}(-1)^m \\
M_{\mu}S(-1)^m & -M_{\mu}C(-1)^m & -M_{\lambda}(-1)^m & -M_{\dot{\beta}}S(-1)^m & M_{\dot{\beta}}C(-1)^m & -M_{\dot{\zeta}}(-1)^m \\
-Q_{\mu}S & Q_{\mu}C & Q_{\lambda} & Q_{\dot{\beta}}S & -Q_{\dot{\beta}}C & Q_{\dot{\zeta}} \\
T_{\mu}S & -T_{\mu}C & -T_{\lambda} & -T_{\dot{\beta}}S & T_{\dot{\beta}}C & -T_{\dot{\zeta}} \\
M_{\mu}2CS & -M_{\mu}2C^2 & -M_{\lambda}2C & -M_{\dot{\beta}}2CS & M_{\dot{\beta}}2C^2 & -M_{\dot{\zeta}}2C \\
M_{\mu}2S^2 & -M_{\mu}2CS & -M_{\lambda}2S & -M_{\dot{\beta}}2S^2 & M_{\dot{\beta}}2CS & -M_{\dot{\zeta}}2S
\end{bmatrix}
$$

$$\tilde{A}_o = \gamma \frac{1}{N} \sum_m \begin{bmatrix} & & & -\lambda M_{q_k\mu} C & \mu M_{q_k\lambda} \\ & & & & -\lambda M_{q_k\mu} S & -M_{q_k\zeta} \\ & & & -\lambda M_{q_k\mu} C(-1)^m & \mu M_{q_k\lambda}(-1)^m \\ & & & & -\lambda M_{q_k\mu} S(-1)^m & -M_{q_k\zeta}(-1)^m \\ & & & -\lambda M_{p_k\mu} C & \mu M_{p_k\lambda} \\ & & & & -\lambda M_{p_k\mu} S & -M_{p_k\zeta} \\ & & & -\lambda M_{p_k\mu} C(-1)^m & \mu M_{p_k\lambda}(-1)^m \\ & & & & -\lambda M_{p_k\mu} S(-1)^m & -M_{p_k\zeta}(-1)^m \\ & & & -\lambda M_\mu C(-1)^m & \mu M_\lambda(-1)^m \\ & & & & -\lambda M_\mu S(-1)^m & -M_\zeta(-1)^m \\ & & & \lambda Q_\mu C & -\mu Q_\lambda \\ & & & & \lambda Q_\mu S & Q_\zeta \\ & & & -\lambda T_\mu C & \mu T_\lambda \\ & & & & -\lambda T_\mu S & -T_\zeta \\ & & & -\lambda M_\mu 2C^2 & \mu M_\lambda 2C \\ & & & & -\lambda M_\mu 2CS & -M_\zeta 2C \\ & & & -\lambda M_\mu 2CS & \mu M_\lambda 2S \\ & & & & -\lambda M_\mu 2S^2 & -M_\zeta 2S \end{bmatrix}$$

$$B_G = \gamma \frac{1}{N} \sum_m \begin{bmatrix} M_{q_k\mu} S & M_{q_k\mu} C & -M_{q_k\lambda} \\ M_{q_k\mu} S(-1)^m & M_{q_k\mu} C(-1)^m & -M_{q_k\lambda}(-1)^m \\ M_{p_k\mu} S & M_{p_k\mu} C & -M_{p_k\lambda} \\ M_{p_k\mu} S(-1)^m & M_{p_k\mu} C(-1)^m & -M_{p_k\lambda}(-1)^m \\ M_\mu S(-1)^m & M_\mu C(-1)^m & -M_\lambda(-1)^m \\ -Q_\mu S & -Q_\mu C & Q_\lambda \\ T_\mu S & T_\mu C & -T_\lambda \\ M_\mu 2CS & M_\mu 2C^2 & -M_\lambda 2C \\ M_\mu 2S^2 & M_\mu 2CS & -M_\lambda 2S \end{bmatrix}$$

$$C_1 = \gamma \frac{1}{N} \sum_m \begin{bmatrix} T_{\dot{q}_i} & T_{\dot{q}_i}(-1)^m & & & T_{\dot{\beta}}(-1)^m & T_{\dot{\zeta}} & T_{\lambda} & T_{\dot{\beta}}C & T_{\dot{\beta}}S \\ \hline H_{\dot{q}_i}2S \\ R_{\dot{q}_i}2C & H_{\dot{q}_i}2S(-1)^m \\ R_{\dot{q}_i}2C(-1)^m & & & H_{\dot{\beta}}2S(-1)^m \\ R_{\dot{\beta}}2C(-1)^m & H_{\dot{\zeta}}2S \\ R_{\dot{\zeta}}2C & H_{\lambda}2S \\ R_{\lambda}2C & H_{\dot{\beta}}2CS \\ R_{\dot{\beta}}2C^2 & H_{\dot{\beta}}2S^2 \\ R_{\dot{\beta}}2CS \\ \hline H_{\dot{q}_i}2C \\ -R_{\dot{q}_i}2S & H_{\dot{q}_i}2C(-1)^m \\ -R_{\dot{q}_i}2S(-1)^m & & & H_{\dot{\beta}}2C(-1)^m \\ -R_{\dot{\beta}}2S(-1)^m & H_{\dot{\zeta}}2C \\ -R_{\dot{\zeta}}2S & H_{\lambda}2C \\ -R_{\lambda}2S & H_{\dot{\beta}}2C^2 \\ -R_{\dot{\beta}}2CS & H_{\dot{\beta}}2CS \\ -R_{\dot{\beta}}2S^2 \\ \hline Q_{\dot{q}_i} & Q_{\dot{q}_i}(-1)^m & & & Q_{\dot{\beta}}(-1)^m & Q_{\dot{\zeta}} & Q_{\lambda} & Q_{\dot{\beta}}C & Q_{\dot{\beta}}S \\ \hline -M_{\dot{q}_i}2C & -M_{\dot{q}_i}2C(-1)^m & & & -M_{\dot{\beta}}2C(-1)^m & -M_{\dot{\zeta}}2C & -M_{\lambda}2C & -M_{\dot{\beta}}2C^2 & -M_{\dot{\beta}}2CS \\ \hline -M_{\dot{q}_i}2S & -M_{\dot{q}_i}2S(-1)^m & & & -M_{\dot{\beta}}2S(-1)^m & -M_{\dot{\zeta}}2S & -M_{\lambda}2S & -M_{\dot{\beta}}2CS & -M_{\dot{\beta}}2S^2 \end{bmatrix}$$

$$C_o = \gamma \frac{1}{N} \sum_m \begin{bmatrix}
T_{q_i} & T_{q_i}(-1)^m & T_{p_i} & T_{p_i}(-1)^m & T_\beta(-1)^m & T_\zeta & & & \\
\begin{matrix} H_{q_i}2S \\ R_{q_i}2C \end{matrix} & \begin{matrix} H_{q_i}2S(-1)^m \\ R_{q_i}2C(-1)^m \end{matrix} & \begin{matrix} H_{p_i}2S \\ R_{p_i}2C \end{matrix} & \begin{matrix} H_{p_i}2S(-1)^m \\ R_{p_i}2C(-1)^m \end{matrix} & \begin{matrix} H_\beta 2S(-1)^m \\ R_\beta 2C(-1)^m \end{matrix} & \begin{matrix} H_\zeta 2S \\ R_\zeta 2C \end{matrix} & & & \\
\begin{matrix} H_{q_i}2C \\ -R_{q_i}2S \end{matrix} & \begin{matrix} H_{q_i}2C(-1)^m \\ -R_{q_i}2S(-1)^m \end{matrix} & \begin{matrix} H_{p_i}2C \\ -R_{p_i}2S \end{matrix} & \begin{matrix} H_{p_i}2C(-1)^m \\ -R_{p_i}2S(-1)^m \end{matrix} & \begin{matrix} H_\beta 2C(-1)^m \\ -R_\beta 2S(-1)^m \end{matrix} & \begin{matrix} H_\zeta 2C \\ -R_\zeta 2S \end{matrix} & & & \\
Q_{q_i} & Q_{q_i}(-1)^m & Q_{p_i} & Q_{p_i}(-1)^m & Q_\beta(-1)^m & Q_\zeta & & & \\
-M_{q_i}2C & -M_{q_i}2C(-1)^m & -M_{p_i}2C & -M_{p_i}2C(-1)^m & -M_\beta 2C(-1)^m & -M_\zeta 2C & & & \\
-M_{q_i}2S & -M_{q_i}2S(-1)^m & -M_{p_i}2S & -M_{p_i}2S(-1)^m & -M_\beta 2S(-1)^m & -M_\zeta 2S & & &
\end{bmatrix}$$

$$\tilde{C}_1 = \gamma \frac{1}{N} \sum_m \begin{bmatrix} -T_\mu S & T_\mu C & T_\lambda & T_{\dot\beta} S & -T_{\dot\beta} C & T_{\dot\zeta} \\ \hline \begin{matrix} -H_\mu 2S^2 \\ -R_\mu 2C^2 \\ -R_r 2CS \end{matrix} & \begin{matrix} H_\mu 2CS \\ -R_\mu 2CS \\ R_r 2C^2 \end{matrix} & \begin{matrix} H_\lambda 2S \\ R_\lambda 2C \end{matrix} & \begin{matrix} H_{\dot\beta} 2S^2 \\ R_{\dot\beta} 2CS \end{matrix} & \begin{matrix} -H_{\dot\beta} 2CS \\ -R_{\dot\beta} 2C^2 \end{matrix} & \begin{matrix} H_{\dot\zeta} 2S \\ R_{\dot\zeta} 2C \end{matrix} \\ \hline \begin{matrix} -H_\mu 2CS \\ R_\mu 2CS \\ R_r 2S^2 \end{matrix} & \begin{matrix} H_\mu 2C^2 \\ R_\mu 2S^2 \\ -R_r 2CS \end{matrix} & \begin{matrix} H_\lambda 2C \\ -R_\lambda 2S \end{matrix} & \begin{matrix} H_{\dot\beta} 2CS \\ -R_{\dot\beta} 2S^2 \end{matrix} & \begin{matrix} -H_{\dot\beta} 2C^2 \\ R_{\dot\beta} 2CS \end{matrix} & \begin{matrix} H_{\dot\zeta} 2C \\ -R_{\dot\zeta} 2S \end{matrix} \\ \hline -Q_\mu S & Q_\mu C & Q_\lambda & Q_{\dot\beta} S & -Q_{\dot\beta} C & Q_{\dot\zeta} \\ \hline M_\mu 2CS & -M_\mu 2C^2 & -M_\lambda 2C & -M_{\dot\beta} 2CS & M_{\dot\beta} 2C^2 & -M_{\dot\zeta} 2C \\ \hline M_\mu 2S^2 & -M_\mu 2CS & -M_\lambda 2S & -M_{\dot\beta} 2S^2 & M_{\dot\beta} 2CS & -M_{\dot\zeta} 2S \end{bmatrix}$$

$$
\tilde{C}_o = \gamma \frac{1}{N} \sum_m
\begin{bmatrix}
 & & & \lambda T_\mu C & \lambda T_\mu S - \mu T_\lambda & T_\zeta \\
 & & & \lambda H_\mu 2CS - \lambda R_\mu 2CS \lambda R_r 2C^2 & \lambda H_\mu 2S^2 \lambda R_\mu 2C^2 \lambda R_r 2CS - \mu H_\lambda 2S - \mu R_\lambda 2C & H_\zeta 2S R_\zeta 2C \\
 & & & \lambda H_\mu 2C^2 \lambda R_\mu 2S^2 - \lambda R_r 2CS & \lambda H_\mu 2CS - \lambda R_\mu 2CS - \lambda R_r 2S^2 - \mu H_\lambda 2C - \mu R_\lambda 2S & H_\zeta 2C - R_\zeta 2S \\
 & & & \lambda Q_\mu C & \lambda Q_\mu S - \mu Q_\lambda & Q_\zeta \\
 & & & -\lambda M_\mu 2C^2 & -\lambda M_\mu 2CS \mu M_\lambda 2C & -M_\zeta 2C \\
 & & & -\lambda M_\mu 2CS & -\lambda M_\mu 2S^2 \mu M_\lambda 2S & -M_\zeta 2S
\end{bmatrix}
$$

$$D_G = \gamma \frac{1}{N} \sum_m \begin{bmatrix} T_\mu S & T_\mu C & -T_\lambda \\ \hline \begin{array}{c} H_\mu 2S^2 \\ +R_\mu 2C^2 \\ +R_r 2CS \end{array} & \begin{array}{c} H_\mu 2CS \\ -R_\mu 2CS \\ +R_r 2C^2 \end{array} & \begin{array}{c} -H_\lambda 2S \\ -R_\lambda 2C \end{array} \\ \hline \begin{array}{c} H_\mu 2CS \\ -R_\mu 2CS \\ -R_r 2C^2 \end{array} & \begin{array}{c} H_\mu 2C^2 \\ +R_\mu 2S^2 \\ -R_r 2CS \end{array} & \begin{array}{c} -H_\lambda 2C \\ +R_\lambda 2S \end{array} \\ \hline Q_\mu S & Q_\mu C & -Q_\lambda \\ \hline -M_\mu 2CS & -M_\mu 2C^2 & M_\lambda 2C \\ \hline -M_\mu 2S^2 & -M_\mu 2CS & M_\lambda 2S \end{bmatrix}$$

APPENDIX C. AIRCRAFT CONTROL TRANSFORMATION MATRICES

The transformation matrices between the pilot controls and the individual rotor controls (T_{CFE}, see section 7.2) are given below for the single main-rotor and tail-rotor and the tandem main-rotor helicopter configurations. The K values are gain factors in the control system, and the $\Delta\psi$ values are swashplate azimuth lead angles. The main rotor or the front rotor is assumed to be rotor 1 and the tail rotor or rear rotor is rotor 2. The parameter Ω here takes the value +1 for counterclockwise rotation of the rotor and -1 for clockwise rotation.

$$
(T_{CFE})_{\substack{\text{single}\\ \text{main}\\ \text{rotor}}} = \begin{bmatrix}
K_o & & & & \\
 & -\Omega_{mr} K_c \cos \Delta\psi_c & -K_s \sin \Delta\psi_s & & \\
 & \Omega_{mr} K_c \sin \Delta\psi_c & -K_s \cos \Delta\psi_s & & \\
 & & & -\Omega_{mr} K_p & \\
 & & & & \\
 & & & & \\
K_t & & & & 1 \\
K_f & & & & \\
 & & K_e & & \\
 & -K_a & & & \\
 & & & K_r &
\end{bmatrix}
$$

$$
(T_{CFE})_{\substack{\text{tandem}\\ \text{main}\\ \text{rotors}}} = \begin{bmatrix}
K_{FO} & & -K_{FS} & & \\
 & -\Omega_1 K_{FC} \cos \Delta\psi_{FC} & & -\Omega_1 K_{FP} \cos \Delta\psi_{FP} & \\
 & \Omega_1 K_{FC} \sin \Delta\psi_{FC} & & \Omega_1 K_{FP} \sin \Delta\psi_{FP} & \\
K_{RO} & & K_{RS} & & \\
 & -\Omega_2 K_{RC} \cos \Delta\psi_{RC} & & \Omega_2 K_{RP} \cos \Delta\psi_{RP} & \\
 & \Omega_2 K_{RC} \sin \Delta\psi_{RC} & & -\Omega_2 K_{RP} \sin \Delta\psi_{RP} & \\
K_t & & & & 1 \\
K_f & & & & \\
 & & K_e & & \\
 & -K_a & & & \\
 & & & K_r &
\end{bmatrix}
$$

For the side-by-side or tilting propotor configurations, the lateral symmetry of the aircraft allows the control transformation to be separated into symmetric and antisymmetric matrices as follows. For a tilting propotor aircraft, the gain parameters (K) would generally be functions of the pylon tilt angle α_p.

$$\begin{pmatrix} \theta_o \\ \theta_{1C} \\ \theta_{1S} \\ \theta_t \\ \delta_f \\ \delta_e \end{pmatrix}_{sym} = \begin{bmatrix} K_o & & \\ & -K_s \sin \Delta\psi_s & \\ & -K_s \cos \Delta\psi_s & \\ K_t & & 1 \\ K_f & & \\ & K_e & \end{bmatrix} \begin{pmatrix} \delta_o \\ \delta_s \\ \delta_t \end{pmatrix}$$

$$\begin{pmatrix} \theta_o \\ \theta_{1C} \\ \theta_{1S} \\ \theta_t \\ \delta_a \\ \delta_r \end{pmatrix}_{antisym} = \begin{bmatrix} -K_c & \\ & K_p \sin \Delta\psi_p \\ & K_p \cos \Delta\psi_p \\ & \\ -K_a & \\ & K_r \end{bmatrix} \begin{pmatrix} \delta_c \\ \delta_p \end{pmatrix}$$

APPENDIX D. MATRICES OF AIRCRAFT EQUATIONS OF MOTION

D1. INERTIAL MATRICES FOR AIRCRAFT EQUATIONS

The inertial matrices for the aircraft equations of motion are given below (see section 8.3). These matrices also include the gravitational forces and the structural forces for the elastic body modes. Superscript * denoting the normalization of the parameters has been omitted for clarity.

$$
a_2 = \begin{bmatrix}
I_x & I_{xz}S_\phi & -I_xS_\theta - I_{xz}C_\phi C_\theta & & & & & & & & \\
I_{xz}S_\phi & I_yC_\phi^2 + I_zS_\phi^2 & (I_y - I_z) * S_\phi C_\phi C_\theta - I_{xz}S_\phi S_\theta & & & & & & & & \\
-I_xS_\theta - I_{xz}C_\phi C_\theta & (I_y - I_z) * S_\phi C_\phi C_\theta - I_{xz}S_\phi S_\theta & I_xS_\theta^2 + I_yS_\phi^2C_\theta^2 + I_zC_\phi^2C_\theta^2 + I_{xz}2C_\phi S_\theta C_\theta & & & & & & & & \\
 & & & M & & & & & & & \\
 & & & & M & & & & & & \\
 & & & & & M & & & & & \\
 & & & & & & M_k & & & & \\
 & & & & & & & M_k & & & \\
 & & & & & & & & \tau_W & & \\
 & & & & & & & & & \tau_H & \\
 & & & & & & & & & & \tau_V
\end{bmatrix}
$$

$$
a_1 = \begin{bmatrix}
 & & & & & & & & & & \\
 & & & & & & & & & & \\
 & & & & & & & & & & \\
 & MV_z C_\phi + MV_y S_\phi & MV_z S_\phi C_\theta - MV_y C_\phi C_\theta & & & & & & & & \\
-MV_z & -MV_x S_\phi & MV_z S_\theta + MV_x C_\phi C_\theta & & & & & & & & \\
MV_y & -MV_x C_\phi & -MV_y S_\theta - MV_x S_\phi C_\theta & & & & & & & & \\
 & & & & & & M_k g_s \omega_k & & & & \\
 & & & & & & & M_k g_s \omega_k & & & \\
 & & & & & & & & 1 & & \\
 & & & & & & & & & 1 & \\
 & & & & & & & & & & 1
\end{bmatrix}
$$

$$
a_o = \begin{bmatrix}
 & & & & & & & & & & \\
 & & & & & & & & & & \\
 & & & & & & & & & & \\
 & MgC_\theta & & & & & & & & & \\
-MgC_\theta C_\phi & MgS_\theta S_\phi & & & & & & & & & \\
MgC_\theta S_\phi & MgS_\theta C_\phi & & & & & & & & & \\
 & & & & & & M_k\omega_k^2 & & & & \\
 & & & & & & & M_k\omega_k^2 & & & \\
 & & & & & & & & & & \\
 & & & & & & & & & & \\
 & & & & & & & & & &
\end{bmatrix}
$$

D2. AERODYNAMIC MATRICES FOR AIRCRAFT EQUATIONS

The aerodynamic matrices for the aircraft equations of motion (see section 8.4) are given below. The aerodynamic coefficients are defined in appendix E.

$$a_2 = \begin{bmatrix} & & & & & & & & & & \\ & & & & & -C_{\theta\ddot{z}} & & & & & \\ & & & & & & & & & & \\ & & & & & & & & & & \\ & & & & & & & & & & \\ & & & & & -C_{z\ddot{z}} & & & & & \\ & & & & & & & & & & \\ & & & & & & & & & & \\ & & & & & & & & & & \\ & & & & & & & & & & \\ & & & & & & & & & & \end{bmatrix}$$

$$
a_1 = \begin{bmatrix}
-C_{\phi\dot{\phi}} & & -C_{\phi\dot{\psi}} & & -C_{\phi\dot{y}} & & -C_{\phi\dot{q}} & & & & -C_{\phi\lambda_v} \\
 & -C_{\theta\dot{\theta}} & & -C_{\theta\dot{x}} & & -C_{\theta\dot{z}} & & -C_{\theta\dot{q}} & -C_{\theta\lambda_w} & -C_{\theta\lambda_H} & \\
-C_{\psi\dot{\phi}} & & -C_{\psi\dot{\psi}} & & -C_{\psi\dot{y}} & & -C_{\psi\dot{q}} & & & & -C_{\psi\lambda_v} \\
 & -C_{x\dot{\theta}} & & -C_{x\dot{x}} & & -C_{x\dot{z}} & & -C_{x\dot{q}} & -C_{x\lambda_w} & -C_{x\lambda_H} & \\
-C_{y\dot{\phi}} & & -C_{y\dot{\psi}} & & -C_{y\dot{y}} & & -C_{y\dot{q}} & & & & -C_{y\lambda_v} \\
 & -C_{z\dot{\theta}} & & -C_{z\dot{x}} & & -C_{z\dot{z}} & & -C_{z\dot{q}} & -C_{z\lambda_w} & -C_{z\lambda_H} & \\
-C_{q\dot{\phi}} & & -C_{q\dot{\psi}} & & -C_{q\dot{y}} & & -C_{q\dot{q}} & & & & -C_{q\lambda_v} \\
 & -C_{q\dot{\theta}} & & -C_{q\dot{x}} & & -C_{q\dot{z}} & & -C_{q\dot{q}} & -C_{q\lambda_w} & -C_{q\lambda_H} & \\
 & & & & & & & & & & \\
 & & & & & & & & & & \\
 & & & & & & & & & &
\end{bmatrix}
$$

$$
a_o = \begin{bmatrix}
 & & & & & & -C_{\phi q} & & & & \\
 & & & & & & & -C_{\theta q} & & & \\
 & & & & & & -C_{\psi q} & & & & \\
 & & & & & & & -C_{xq} & & & \\
 & & & & & & -C_{yq} & & & & \\
 & & & & & & & -C_{zq} & & & \\
 & & & & & & -C_{qq} & & & & \\
 & & & & & & & -C_{qq} & & & \\
 & & & & & & & & & & \\
 & & & & & & & & & & \\
 & & & & & & & & & &
\end{bmatrix}
$$

$$b = \begin{bmatrix} & & C_{\phi a} & C_{\phi r} \\ C_{\theta f} & & & \\ & & C_{\psi a} & C_{\psi r} \\ C_{xf} & C_{xe} & & \\ & & C_{ya} & C_{yr} \\ C_{zf} & C_{ze} & & \\ & & C_{qa} & C_{qr} \\ C_{qf} & C_{qe} & & \\ & & & \\ & & & \\ & & & \end{bmatrix} \qquad b_G = \begin{bmatrix} & C_{\phi\dot{y}} & \\ C_{\theta\dot{x}} & & C_{\theta\dot{z}} \\ & C_{\psi\dot{y}} & \\ C_{x\dot{x}} & & C_{x\dot{z}} \\ & C_{y\dot{y}} & \\ C_{z\dot{x}} & & C_{z\dot{z}} \\ & C_{q\dot{y}} & \\ C_{q\dot{x}} & & C_{q\dot{z}} \\ & & \\ & & \\ & & \end{bmatrix}$$

APPENDIX E. AIRCRAFT AERODYNAMIC COEFFICIENTS

The aerodynamic coefficients required for the symmetric and antisymmetric aircraft equations of motion (see section 8.4) are defined as follows.

$$C_{\theta\dot{\theta}} = -\frac{\gamma}{\sigma a} V q_y^2 \left\{ \left[x^2 K_{LA} + z^2 K_{DU} - xz(K_{DA} + K_{LU}) \right]_{WB} + \left[x^2 K_{LA} + z^2 K_{DU} - xz(K_{DA} + K_{LU}) \right]_{HT} \right\}$$

$$C_{x\dot{\theta}} = -\frac{\gamma}{\sigma a} V q_y \left[(zK_{DU} - xK_{DA})_{WB} + (zK_{DU} - xK_{DA})_{HT} \right]$$

$$C_{z\dot{\theta}} = -\frac{\gamma}{\sigma a} V q_y \left[(zK_{LU} - xK_{LA})_{WB} + (zK_{LU} - xK_{LA})_{HT} \right]$$

$$C_{q_k\dot{\theta}} = -\frac{\gamma}{\sigma a} V q_y \left[-e_x (zK_{DU} - xK_{DA})_{WB} - e_z (zK_{LU} - xK_{LA})_{WB} + x_k (zK_{DU} - xK_{DA})_{HT} + z_k (zK_{LU} - xK_{LA})_{HT} \right]$$

$$C_{\theta\dot{x}} = -\frac{\gamma}{\sigma a} V q_y \left[(zK_{DU} - xK_{LU})_{WB} - (K_{MU})_{WB} + \left(1 - \frac{\partial\varepsilon}{\partial\alpha}\right)(zK_{DU} - xK_{LU})_{HT} \right]$$

$$C_{x\dot{x}} = -\frac{\gamma}{\sigma a} V \left[(K_{DU})_{WB} + (K_{DU})_{HT} \right]$$

$$C_{z\dot{x}} = -\frac{\gamma}{\sigma a} V \left[(K_{LU})_{WB} + (K_{LU})_{HT} \right]$$

$$C_{q_k\dot{x}} = -\frac{\gamma}{\sigma a} V \left[-(e_x K_{DU} + e_z K_{LU})_{WB} + (x_k K_{DU} + z_k K_{LU})_{HT} \right]$$

$$C_{\theta\dot{z}} = -\frac{\gamma}{\sigma a} V q_y \left[(zK_{DA} - xK_{LA})_{WB} - (K_{MA})_{WB} + \left(1 - \frac{\partial\varepsilon}{\partial\alpha}\right)(zK_{DA} - xK_{LA})_{HT} \right]$$

$$C_{x\dot{z}} = -\frac{\gamma}{\sigma a} V \left[(K_{DA})_{WB} + \left(1 - \frac{\partial\varepsilon}{\partial\alpha}\right)(K_{DA})_{HT} \right]$$

$$C_{z\dot{z}} = -\frac{\gamma}{\sigma a} V\left[(K_{LA})_{WB} + \left(1 - \frac{\partial\varepsilon}{\partial\alpha}\right)(K_{LA})_{HT}\right]$$

$$C_{q_k\dot{z}} = -\frac{\gamma}{\sigma a} V\left[-(e_x K_{DA} + e_z K_{LA})_{WB} + (x_k K_{DA} + z_k K_{LA})_{HT}\right]$$

$$C_{\theta\dot{q}_i} = -\frac{\gamma}{\sigma a} V q_y \Big\{-[e_x(zK_{DU} - xK_{LU}) + e_z(zK_{DA} - xK_{LA})]_{WB}$$

$$+ [x_i(zK_{DU} - xK_{LU}) + z_i(zK_{DA} - xK_{LA})]_{HT}\Big\}$$

$$C_{x\dot{q}_i} = -\frac{\gamma}{\sigma a} V\left[-(e_x K_{DU} + e_z K_{DA})_{WB} + (x_i K_{DU} + z_i K_{DA})_{HT}\right]$$

$$C_{z\dot{q}_i} = -\frac{\gamma}{\sigma a} V\left[-(e_x K_{LU} + e_z K_{LA})_{WB} + (x_i K_{LU} + z_i K_{LA})_{HT}\right]$$

$$C_{q_k\dot{q}_i} = -\frac{\gamma}{\sigma a} V\Big[(e_{zz}K_{LA} + e_{zx}K_{LU} + e_{xz}K_{DA} + e_{xx}K_{DU})_{WB}$$

$$+ \left(\frac{S_w c_w}{8AR} e_{\theta\theta}\right)_{WB} + (z_k z_i K_{LA} + z_k x_i K_{LU} + x_k z_i K_{DA} + x_k x_i K_{DU})_{HT}\Big]$$

$$C_{\theta\ddot{z}} = -\frac{\gamma}{\sigma a} V q_y \left\{\frac{\partial\varepsilon}{\partial\alpha}\,[z^2 K_{DU} + x^2 K_{LA} - xz(K_{DA} + K_{LU})]_{HT}\right\}$$

$$C_{z\ddot{z}} = -\frac{\gamma}{\sigma a} V\left[\frac{\partial\varepsilon}{\partial\alpha}\,(zK_{LU} - xK_{LA})_{HT}\right]$$

$$C_{\theta q_i} = -\frac{\gamma}{\sigma a} V^2\left[e_\theta(zK_{DT} - xK_{LT})_{WB} + \theta_i(zK_{DT} - xK_{LT})_{HT}\right]$$

$$C_{xq_i} = -\frac{\gamma}{\sigma a} V^2\left[(e_\theta K_{DT})_{WB} + (\theta_i K_{DT})_{HT}\right]$$

$$C_{zq_i} = -\frac{\gamma}{\sigma a} V^2\left[(e_\theta K_{LT})_{WB} + (\theta_i K_{LT})_{HT}\right]$$

$$C_{q_k q_i} = -\frac{\gamma}{\sigma a} V^2\left[-(e_{x\theta}K_{DT} + e_{z\theta}K_{LT})_{WB} + \theta_i(x_k K_{DT} + z_k K_{LT})_{HT}\right]$$

$$C_{\theta\lambda_w} = \frac{\gamma}{\sigma a} V q_y\left[\left(zK_{DW} - xK_{LW} - \frac{1}{AR}\frac{M_\alpha}{q}\right)_{WB}\right]$$

$$C_{x\lambda_w} = \frac{\gamma}{\sigma a} V\left[(K_{DW})_{WB}\right]$$

$$C_{z\lambda_w} = \frac{\gamma}{\sigma a} V\left[(K_{LW})_{WB}\right]$$

$$C_{q_k\lambda_w} = \frac{\gamma}{\sigma a} V\left[-(e_x K_{DW} + e_z K_{LW})_{WB}\right]$$

$$C_{\theta\lambda_H} = \frac{\gamma}{\sigma a} V q_y\left[(zK_{DW} - xK_{LW})_{HT}\right]$$

$$C_{x\lambda_H} = \frac{\gamma}{\sigma a} V\left[(K_{DW})_{HT}\right]$$

$$C_{z\lambda_H} = \frac{\gamma}{\sigma a} V\left[(K_{LW})_{HT}\right]$$

$$C_{q_k\lambda_H} = \frac{\gamma}{\sigma a} V\left[(x_k K_{DW} + z_k K_{LW})_{HT}\right]$$

$$C_{\theta\delta_f} = -\frac{\gamma}{\sigma a} V^2 q_y\left[\frac{\ell_O - \ell_I}{\ell_w/2}\left(zK_{DC} - xK_{LC} - \frac{1}{AR}\frac{M_\delta}{q}\right)_{WB}\right]$$

$$C_{x\delta_f} = -\frac{\gamma}{\sigma a} V^2\left[\frac{\ell_O - \ell_I}{\ell_w/2}(K_{DC})_{WB}\right]$$

$$C_{z\delta_f} = -\frac{\gamma}{\sigma a} V^2\left[\frac{\ell_O - \ell_I}{\ell_w/2}(K_{LC})_{WB}\right]$$

$$C_{q_k\delta_f} = -\frac{\gamma}{\sigma a} V^2\left[-(e_{x\delta}K_{DC} + e_{z\delta}K_{LC})_{WB}\right]$$

$$C_{\theta\delta_e} = -\frac{\gamma}{\sigma a} V^2 q_y\left[(zK_{DC} - xK_{LC})_{HT}\right]$$

$$C_{x\delta_e} = -\frac{\gamma}{\sigma a} V^2\left[(K_{DC})_{HT}\right]$$

$$C_{z\delta_e} = -\frac{\gamma}{\sigma a} V^2\left[(K_{LC})_{HT}\right]$$

$$C_{q_k\delta_e} = -\frac{\gamma}{\sigma a} V^2 \left[(x_k K_{DC} + z_k K_{LC})_{HT}\right]$$

$$C_{\phi\dot{\phi}} = -\frac{\gamma}{\sigma a} V\left[\frac{1}{12}\ \ell_w^2 (K_{LA})_{WB} + \left(1 - \frac{V}{z}\frac{\partial\sigma}{\partial p}\right)(z^2 K_{LA})_{VT}\right]$$

$$C_{\psi\dot{\phi}} = -\frac{\gamma}{\sigma a} V\left\{\frac{1}{12}\ \ell_w^2 (-r_z K_{DA} + r_x K_{LA})_{WB}\right.$$

$$\left. + \left(1 - \frac{V}{z}\frac{\partial\sigma}{\partial p}\right)[-z(xr_z - zr_x)K_{LA} - z^2 r_y K_{DA}]_{VT}\right\}$$

$$C_{y\dot{\phi}} = -\frac{\gamma}{\sigma a} V\left[\frac{1}{4}\ \ell_w (\psi_w K_{DA} + \phi_w K_{LA})_{WB} + \left(1 - \frac{V}{z}\frac{\partial\sigma}{\partial p}\right)(-zK_{LA})_{VT}\right]$$

$$C_{q_k\dot{\phi}} = -\frac{\gamma}{\sigma a} V\left[-(e_{x\ell} K_{DA} - e_{z\ell} K_{LA})_{WB} + \left(\frac{1}{12}\ \ell_H^2 \phi_k K_{LA}\right)_{HT} - (y_k z K_{LA})_{VT}\right]$$

$$C_{\phi\dot{\psi}} = -\frac{\gamma}{\sigma a} V\left\{\frac{1}{12}\ \ell_w^2 (-r_z K_{LU} + r_x K_{LA})_{WB}\right.$$

$$\left. + \left(1 - \frac{V}{x}\frac{\partial\sigma}{\partial r}\right)\left[-z(xr_z - zr_x)K_{LA} - z^2 r_y K_{LU}\right]_{VT}\right\}$$

$$C_{\psi\dot{\psi}} = -\frac{\gamma}{\sigma a} V\left\{\frac{1}{12}\ \ell_w^2 \left[r_z^2 K_{DU} + r_x^2 K_{LA} - r_z r_x (K_{DA} + K_{LU})\right]_{WB}\right.$$

$$+ \left(1 - \frac{V}{x}\frac{\partial\sigma}{\partial r}\right)\left[(xr_z - zr_x)^2 K_{LA} + (zr_y)^2 K_{DU}\right.$$

$$\left.\left. + (xr_z - zr_x) zr_y (K_{DA} + K_{LU})\right]_{VT}\right\}$$

$$C_{y\dot{\psi}} = -\frac{\gamma}{\sigma a} V\left\{\frac{1}{4}\ \ell_w \left[-r_z(\psi_w K_{DU} + \phi_w K_{LU}) + r_x(\psi_w K_{DA} + \phi_w K_{LA})\right]_{WB}\right.$$

$$\left. + \left(1 - \frac{V}{x}\frac{\partial\sigma}{\partial r}\right)\left[(xr_z - zr_x)K_{LA} + zr_y K_{LU}\right]_{VT}\right\}$$

$$C_{q_k\dot{\psi}} = -\frac{\gamma}{\sigma a} V\left\{\left[e_{x\ell}(r_z K_{DU} - r_x K_{DA}) + e_{z\ell}(r_z K_{LU} - r_x K_{LA})\right]_{WB}\right.$$

$$+ \left[\frac{1}{12}\ \ell_H^2 \phi_k (-r_z K_{LU} + r_x K_{LA})\right]_{HT}$$

$$\left. + \left[y_k (xr_z - zr_x) K_{LA} + y_k z r_y K_{LU}\right]_{VT}\right\}$$

$$C_{\phi\dot{y}} = -\frac{\gamma}{\sigma a} V\left[\frac{1}{4}\ell_w(\psi_w K_{LU} + \phi_w K_{LA})_{WB} - \frac{1}{AR}\left(\frac{N_{x_\beta}}{q}\right)_{WB} - \left(1 - \frac{\partial\sigma}{\partial\beta}\right)(zK_{LA})_{VT}\right]$$

$$C_{\psi\dot{y}} = -\frac{\gamma}{\sigma a} V\left\{\frac{1}{4}\ell_w\left[-r_z(\psi_w K_{DU} + \phi_w K_{DA}) + r_x(\psi_w K_{LU} + \phi_w K_{LA})\right]_{WB} - r_z\frac{1}{AR}\left(\frac{N_{z_\beta}}{q}\right)_{WB} + \left(1 - \frac{\partial\sigma}{\partial\beta}\right)\left[(xr_z - zr_x)K_{LA} + zr_y K_{DA}\right]_{VT}\right\}$$

$$C_{y\dot{y}} = -\frac{\gamma}{\sigma a} V\left[\left(1 - \frac{\partial\sigma}{\partial\beta}\right)(K_{LA})_{VT} - \frac{1}{A}\left(\frac{Y_\beta}{q}\right)_{WB}\right]$$

$$C_{q_k\dot{y}} = -\frac{\gamma}{\sigma a} V\left\{-\left[e_x(\psi_w K_{DU} + \phi_w K_{DA}) + e_z(\psi_w K_{LU} + \phi_w K_{LA})\right]_{WB} + (y_k K_{LA})_{VT}\right\}$$

$$C_{\phi\dot{q}_i} = -\frac{\gamma}{\sigma a} V\left[-(e_{x\ell}K_{LU} + e_{z\ell}K_{LA})_{WB} + \left(\frac{1}{12}\ell_H^2\phi_i K_{LA}\right)_{HT} - (y_i zK_{LA})_{VT}\right]$$

$$C_{\psi\dot{q}_i} = -\frac{\gamma}{\sigma a} V\left\{\left[e_{x\ell}(r_z K_{DU} - r_x K_{LU}) + e_{z\ell}(r_z K_{DA} - r_x K_{LA})\right]_{WB} + \left[\frac{1}{12}\ell_H^2\phi_i(-r_z K_{DA} + r_x K_{LA})\right]_{HT} + \left[y_i(xr_z - zr_x)K_{LA} + y_i zr_y K_{DA}\right]_{VT}\right\}$$

$$C_{y\dot{q}_i} = -\frac{\gamma}{\sigma a} V\left\{-\left[e_x(\psi_w K_{DU} + \phi_w K_{LU}) + e_z(\psi_w K_{DA} + \phi_w K_{LA})\right]_{WB} + (y_i K_{LA})_{VT}\right\}$$

$$C_{q_k\dot{q}_i} = -\frac{\gamma}{\sigma a} V\left\{(e_{zz}K_{LA} + e_{zx}K_{LU} + e_{xz}K_{DA} + e_{xx}K_{DU})_{WB} + \left(\frac{S_w c_w}{8AR}e_{\theta\theta}\right)_{WB} + \left(\frac{1}{12}\ell_H^2\phi_k\phi_i K_{LA}\right)_{HT} + \left[\left(y_k y_i + \frac{1}{12}\ell_V^2\phi_k\phi_i\right)K_{LA}\right]_{VT}\right\}$$

$$C_{\phi q_i} = -\frac{\gamma}{\sigma a} V^2 \left[(e_{\theta \ell} K_{LT})_{WB} + (z \psi_i K_{LT})_{VT} \right]$$

$$C_{\psi q_i} = -\frac{\gamma}{\sigma a} V^2 \Big\{ \left[e_{\theta \ell} (r_x K_{LT} - r_z K_{DT}) \right]_{WB} + \left[-\psi_i \left((x r_z - z r_x) K_{LT} + z r_y K_{DT} \right) \right]_{VT} \Big\}$$

$$C_{y q_i} = -\frac{\gamma}{\sigma a} V^2 \left[e_\theta (\phi_w K_{LT} + \psi_w K_{DT})_{WB} - (\psi_i K_{LT})_{VT} \right]$$

$$C_{q_k q_i} = -\frac{\gamma}{\sigma a} V^2 \left[-(e_{x\theta} K_{DT} + e_{z\theta} K_{LT})_{WB} - (y_k \psi_i K_{LT})_{VT} \right]$$

$$C_{\phi \lambda_v} = \frac{\gamma}{\sigma a} V \left[(-z K_{LW})_{VT} \right]$$

$$C_{\psi \lambda_v} = \frac{\gamma}{\sigma a} V \Big\{ \left[(x r_z - z r_x) K_{LW} + z r_y K_{DW} \right]_{VT} \Big\}$$

$$C_{y \lambda_v} = \frac{\gamma}{\sigma a} V \left[(K_{LW})_{VT} \right]$$

$$C_{q_k \lambda_v} = \frac{\gamma}{\sigma a} V \left[(y_k K_{LW})_{VT} \right]$$

$$C_{\phi \delta_a} = -\frac{\gamma}{\sigma a} V^2 \left[\frac{1}{4} \ell_w \left(\frac{\ell_O^2 - \ell_I^2}{\ell_w^2/4} \right) (K_{LC})_{WB} \right]$$

$$C_{\psi \delta_a} = -\frac{\gamma}{\sigma a} V^2 \left[\frac{1}{4} \ell_w \left(\frac{\ell_o^2 - \ell_I^2}{\ell_w^2/4} \right) (r_x K_{LC} - r_z K_{DC})_{WB} \right]$$

$$C_{y \delta_a} = -\frac{\gamma}{\sigma a} V^2 \left[\frac{1}{4} \ell_w \left(\frac{\ell_O^2 - \ell_I^2}{\ell_w^2/4} \right) (\phi_w K_{LC} + \psi_w K_{DC})_{WB} \right]$$

$$C_{q_k \delta_a} = -\frac{\gamma}{\sigma a} V^2 \left[-(e_{x\delta} K_{DC} + e_{z\delta} K_{LC})_{WB} \right]$$

$$C_{\phi \delta_r} = -\frac{\gamma}{\sigma a} V^2 \left[-(z K_{LC})_{VT} \right]$$

$$C_{\psi\delta_r} = -\frac{\gamma}{\sigma a} V^2 \left\{ \left[(xr_z - zr_x)K_{LC} + zr_y K_{DC} \right]_{VT} \right\}$$

$$C_{y\delta_r} = -\frac{\gamma}{\sigma a} V^2 \left[(K_{LC})_{VT} \right]$$

$$C_{q_k\delta_r} = -\frac{\gamma}{\sigma a} V^2 \left[(y_k K_{LC})_{VT} \right]$$

Subscripts WB, HT, and VT refer to the wing-body, horizontal tail, and vertical tail, respectively. The components of the aircraft angular velocity introduce the following factors:

$$q_y = \cos \phi_{FT}$$

$$r_x = -\sin \theta_{FT}$$

$$r_y = \sin \phi_{FT} \cos \theta_{FT}$$

$$r_z = \cos \phi_{FT} \cos \theta_{FT}$$

The quantities x and z are the location of the aerodynamic surface center of action, in body axes (F system), relative to the aircraft center of gravity. The parameter A is the rotor area (πR^2); S_w, c_w, and ℓ_w are, respectively, the wing area, chord, and span; ℓ_I and ℓ_O are the inboard and outboard edges of the wing control surface; ψ_w and ϕ_w are the wing sweep and dihedral angles (assumed to be small). The horizontal tail and vertical tail spans are ℓ_H and ℓ_V, respectively.

In airplane analyses, it is conventional to use coefficients based on the wing area S_w. A rotorcraft usually does not have a wing and, generally, there is no good reference area for the airframe aerodynamics. Thus, here the aerodynamic force characteristics are used in the form L/q, which have dimensions of length-squared (q is the dynamic pressure; the moment characteristics, M/q, have dimensions length-cubed). This form is appropriate for the analysis of a specific vehicle, where the scaling with velocity, but not with size, is of concern. The aerodynamic characteristics required for the wing-body description are the lift, drag, and pitching moment (L/q, D/q, and M_y/q), and their derivatives with respect to angle of attack, flaperon deflection, and aileron deflection; and the side force, rolling moment, and yawing moment (Y/q, N_x/q, and N_z/q) and their derivatives with respect to sideslip angle. The rolling and yawing moment derivatives N_{x_β} and N_{z_β} are for the wing-body alone (no vertical tail contributions), and without the sweep and dihedral terms already included in $C_{\phi\dot{y}}$ and $C_{\psi\dot{y}}$. The vertical and horizontal tail

aerodynamic characteristics required are lift and drag and their derivatives with respect to angle of attack and control-surface deflection. To account for the velocity vector not being aligned with the x axis, the aerodynamic characteristics are required in the following combinations for the aerodynamic coefficients:

$$K_{LA} = \frac{1}{A}\left[\left(\frac{L_\alpha}{q} + \frac{D}{q}\right)\cos^2 \phi_V + 2\,\frac{D}{q}\sin^2 \phi_V + \left(\frac{D_\alpha}{q} + \frac{L}{q}\right)\sin \phi_V \cos \phi_V\right]$$

$$K_{DA} = \frac{1}{A}\left[\left(\frac{D_\alpha}{q} - \frac{L}{q}\right)\cos^2 \phi_V - 2\,\frac{L}{q}\sin^2 \phi_V - \left(\frac{L_\alpha}{q} - \frac{D}{q}\right)\sin \phi_V \cos \phi_V\right]$$

$$K_{LU} = \frac{1}{A}\left[2\,\frac{L}{q}\cos^2 \phi_V - \left(\frac{D_\alpha}{q} - \frac{L}{q}\right)\sin^2 \phi_V - \left(\frac{L_\alpha}{q} - \frac{D}{q}\right)\sin \phi_V \cos \phi_V\right]$$

$$K_{DU} = \frac{1}{A}\left[2\,\frac{D}{q}\cos^2 \phi_V + \left(\frac{L_\alpha}{q} + \frac{D}{q}\right)\sin^2 \phi_V - \left(\frac{D_\alpha}{q} + \frac{L}{q}\right)\sin \phi_V \cos \phi_V\right]$$

$$K_{MA} = \frac{1}{AR}\left(\frac{M_\alpha}{q}\cos \phi_V + 2\,\frac{M}{q}\sin \phi_V\right)$$

$$K_{MU} = \frac{1}{AR}\left(2\,\frac{M}{q}\cos \phi_V - \frac{M_\alpha}{q}\sin \phi_V\right)$$

$$K_{LT} = \frac{1}{A}\left(\frac{L_\alpha}{q}\cos \phi_V + \frac{D_\alpha}{q}\sin \phi_V\right)$$

$$K_{DT} = \frac{1}{A}\left(\frac{D_\alpha}{q}\cos \phi_V - \frac{L_\alpha}{q}\sin \phi_V\right)$$

$$K_{LC} = \frac{1}{A}\left(\frac{L_\delta}{q}\cos \phi_V + \frac{D_\delta}{q}\sin \phi_V\right)$$

$$K_{DC} = \frac{1}{A}\left(\frac{D_\delta}{q}\cos \phi_V - \frac{L_\delta}{q}\sin \phi_V\right)$$

$$K_{LW} = \frac{1}{A}\left[\left(\frac{L_\alpha}{q} + \frac{D}{q}\right)\cos \phi_V + \left(\frac{D_\alpha}{q} - \frac{L}{q}\right)\sin \phi_V\right]$$

$$K_{DW} = \frac{1}{A}\left[\left(\frac{D_\alpha}{q} - \frac{L}{q}\right)\cos \phi_V - \left(\frac{L_\alpha}{q} + \frac{D}{q}\right)\sin \phi_V\right]$$

Here ϕ_V is the angle of attack of the reference axis system, so $\phi_V = \tan^{-1} V_z/V_x$ for the wing-body and horizontal tail and $\phi_V = \tan^{-1} V_y/V_x$ for the vertical tail.

The wing-induced velocity at the horizontal tail is accounted for by the derivative $\partial\varepsilon/\partial\alpha$. The following expression is used (from ref. 16):

$$\frac{\partial\varepsilon}{\partial\alpha} = \frac{0.45\ C_{L_\alpha}}{(\ell_w^2/S_w)^{0.735}(\ell_{HT}/c_w)^{0.25}}$$

where ℓ_{HT} is the tail length and C_{L_α} is the wing lift-curve slope. The side-wash velocities at the vertical tail are given by $\partial\sigma/\partial\beta$, $(V/z_{VT})\partial\sigma/\partial p$, and $(V/x_{VT})\partial\sigma/\partial r$ for sideslip, rolling, and yawing motion, respectively. Typical values are $\partial\sigma/\partial\beta$ and $(V/x_{VT})\partial\sigma/\partial r$ near zero and $(V/z_{VT})\partial\sigma/\partial p$ approximately 1 (ref. 15).

Finally, the required integrals of the wing bending and torsion motion for the elastic degrees of freedom are:

$$e_{zz} = \int_0^1 z_k z_i \frac{d\ell}{\ell_w/2} - (y_k e_z + e_z y_i)\phi_w$$

$$e_{zx} = \int_0^1 z_k x_i \frac{d\ell}{\ell_w/2} - y_k e_x \phi_w - e_z y_i \psi_w$$

$$e_{xz} = \int_0^1 x_k z_i \frac{d\ell}{\ell_w/2} - y_k e_z \psi_w - e_x y_i \phi_w$$

$$e_{xx} = \int_0^1 x_k x_i \frac{d\ell}{\ell_w/2} - (y_k e_x + e_x y_i)\psi_w$$

$$e_z = \int_0^1 z_k \frac{d\ell}{\ell_w/2}$$

$$e_x = \int_0^1 x_k \frac{d\ell}{\ell_w/2}$$

$$e_\theta = \int_0^1 \theta_i \frac{d\ell}{\ell_w/2}$$

$$e_{z\ell} = \int_0^1 z_k{}^{\ell} \frac{d\ell}{\ell_w/2} - y_k \frac{\ell_w}{4} \phi_w$$

$$e_{x\ell} = \int_0^1 x_k{}^{\ell} \frac{d\ell}{\ell_w/2} - y_k \frac{\ell_w}{4} \psi_w$$

$$e_{\theta\ell} = \int_0^1 \theta_i{}^{\ell} \frac{d\ell}{\ell_w/2}$$

$$e_{z\theta} = \int_0^1 z_k \theta_i \frac{d\ell}{\ell_w/2} - y_k e_\theta \phi_w$$

$$e_{x\theta} = \int_0^1 x_k \theta_i \frac{d\ell}{\ell_w/2} - y_k e_\theta x_w$$

$$e_{\theta\theta} = \int_0^1 \theta_k \theta_i \frac{d\ell}{\ell_w/2}$$

$$e_{z\delta} = \int_{\ell_I}^{\ell_O} z_k \frac{d\ell}{\ell_w/2} - y_k \phi_w \frac{\ell_O - \ell_I}{\ell_w/2}$$

$$e_{x\delta} = \int_{\ell_I}^{\ell_O} x_k \frac{d\ell}{\ell_w/2} - y_k \psi_w \frac{\ell_O - \ell_I}{\ell_w/2}$$

The y_k terms are absent for the symmetric modes; the integrals $e_{z\ell}$, $e_{x\ell}$, and $e_{\theta\ell}$ are required only for antisymmetric modes.

REFERENCES

1. Houbolt, John C.; and Brooks, George W.: Differential Equations of Motion for Combined Flapwise Bending, Chordwise Bending, and Torsion of Twisted Nonuniform Rotor Blades, NACA Rept. 1346, 1958.

2. Bisplinghoff, Raymond L.; Mar, James W.; and Pian, Theodore H. H.; Statics of Deformable Solids, Addison-Wesley Publ. Co., 1965.

3. Rivelo, Robert M.: Theory and Analysis of Flight Structures, McGraw-Hill Book Co., 1968.

4. Coleman, Robert P.; and Feingold, Arnold M.: Theory of Self-Excited Mechanical Oscillations of Helicopter Rotors with Hinged Blades, NACA Rept. 1351, 1958.

5. Miller, R. H.: Helicopter Control and Stability in Hovering Flight, J. Aeronaut. Sci., vol. 15, no. 8, Aug. 1948, pp. 453-472.

6. Hohenemser, Kurt H.; and Yin, Sheng-Kuang: Some Applications of the Method of Multiblade Coordinates, J. American Helicopter Soc., vol. 17, no. 3, July 1972, pp. 3-12.

7. Bisplinghoff, Raymond L.; Ashley, Holt; and Halfman, Robert L.: Aeroelasticity, Addison-Wesley Publ. Co., 1955.

8. Ashley, Holt: Engineering Analysis of Flight Vehicles, Addison-Wesley Publ. Co., 1974.

9. Hill, Philip G.; and Peterson, Carl R.: Mechanics and Thermodynamics of Propulsion, Addison-Wesley Publ. Co., 1965.

10. Nasar, S. A.: Electromagnetic Energy Conversion Devices and Systems, Prentice-Hall, Inc., 1970.

11. Loewy, Robert G.: A Two-Dimensional Approximation to the Unsteady Aerodynamics of Rotary Wings, J. Aeronaut. Sci., vol. 24, no. 2, Feb. 1957, pp. 81-92.

12. Miller, R. H.: Rotor Blade Harmonic Air Loading, AIAA J., vol. 2, no. 7, July 1964, pp. 1254-1269.

13. Peters, David A.: Hingeless Rotor Frequency Response with Unsteady Inflow, NASA SP-352, 1974.

14. Ormiston, Robert A.; and Peters, David A.: Hingeless Helicopter Rotor Response with Nonuniform Inflow and Elastic Blade Bending, J. Aircraft, vol. 9, no. 10, Oct. 1972, pp. 730-736.

15. Etkin, Bernard: Dynamics of Flight, John Wiley and Sons, Inc., 1959.

16. Dommasch, Daniel O.; Sherby, Sydney S.; and Connally, Thomas F.: Airplane Aerodynamics, Fourth ed., Pitman Publ. Corp., 1968.

17. Cheeseman, I. C.; and Bennett, W. E.: The Effect of the Ground on a Helicopter Rotor in Forward Flight, ARC R&M 3021, Sept. 1955.

18. Johnson, Wayne: Elementary Applications of a Rotorcraft Dynamic Stability Analysis, NASA TM X-73,161, 1976.

19. Johnson, Wayne: Analytical Modeling Requirements for Tilting Proprotor Aircraft Dynamics, NASA TN D-8013, 1975.

20. Johnson, Wayne: Optimal Control Alleviation of Tilting Proprotor Gust Response, NASA TM X-62,494, 1975.

21. Johnson, Wayne: Predicted Dynamic Characteristics of the XV-15 Tilting Proprotor Aircraft in Flight and in the 40- by 80-Ft Wind Tunnel, NASA TM X-73,158, 1976.

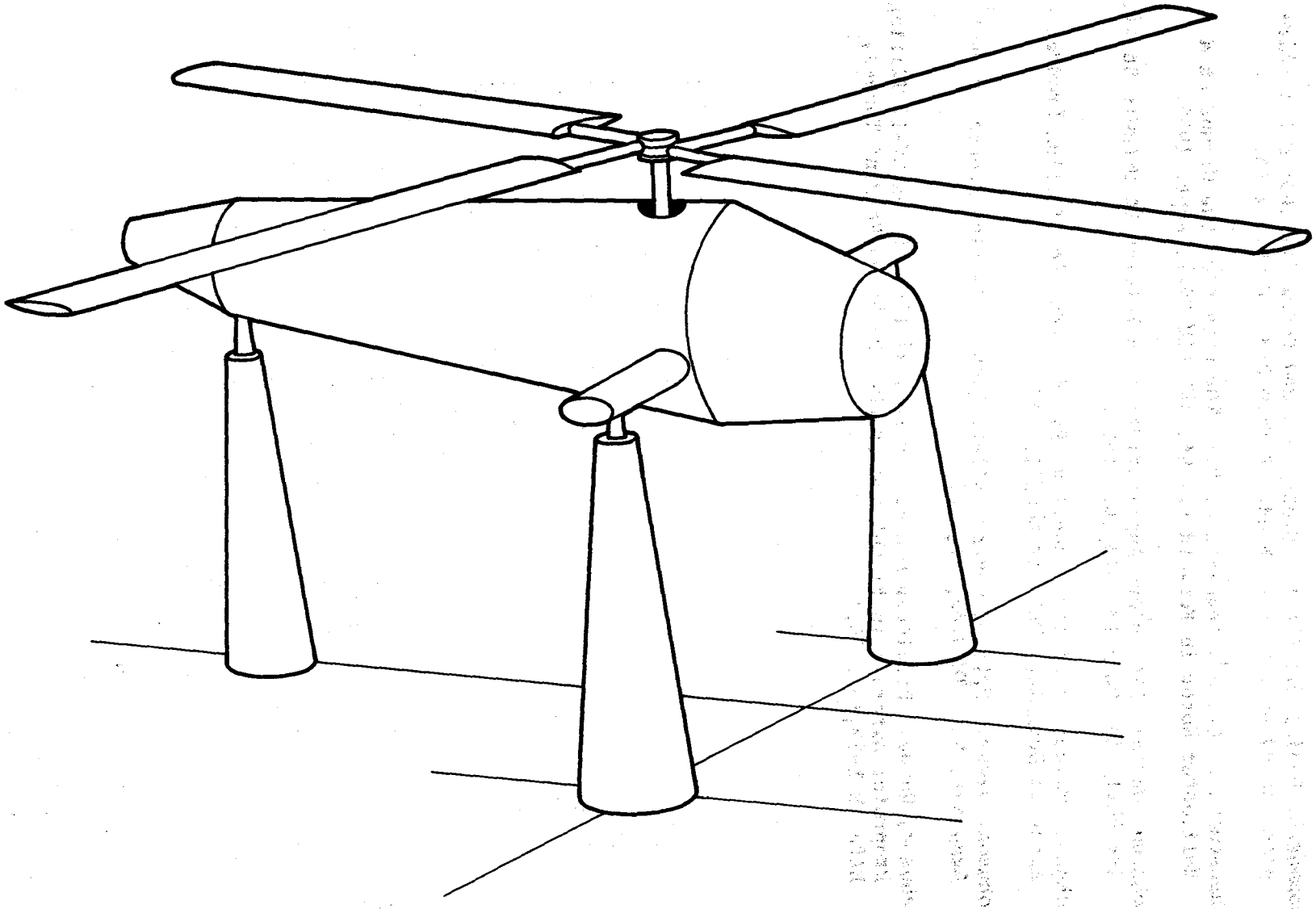

Figure 1.- Typical rotor and wind-tunnel support configuration.

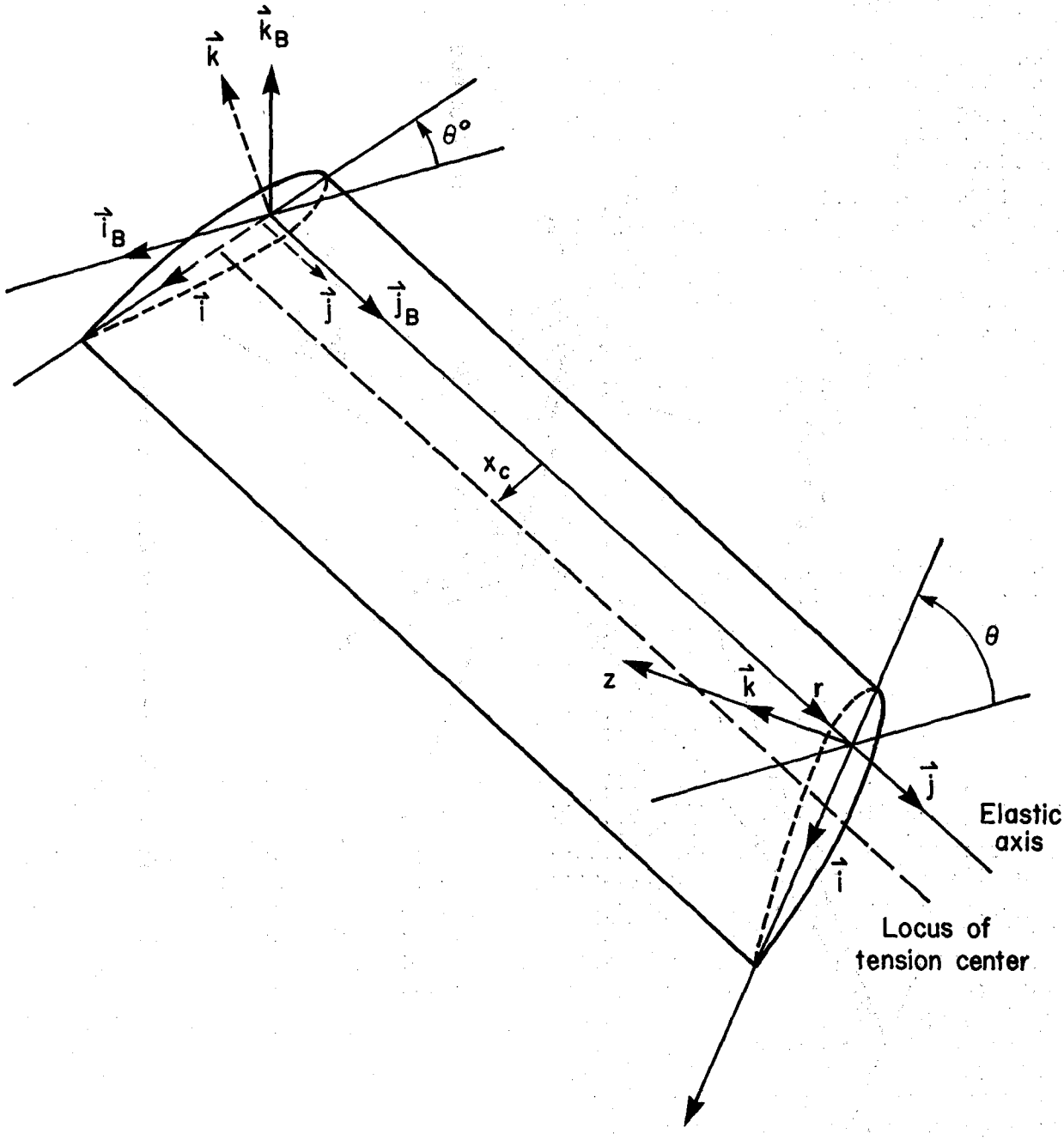

Figure 2.- Geometry of undeformed blade.

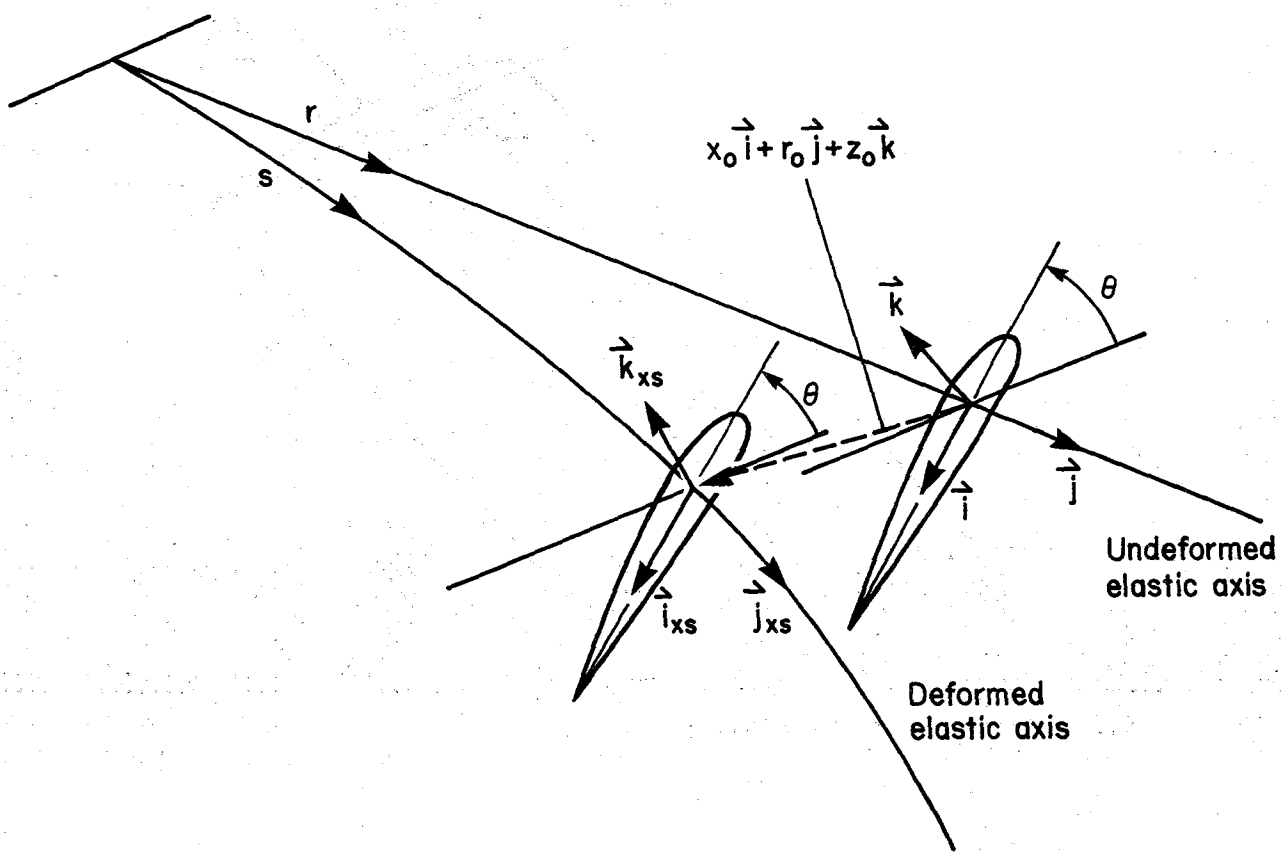

Figure 3.- Geometry of deformed blade.

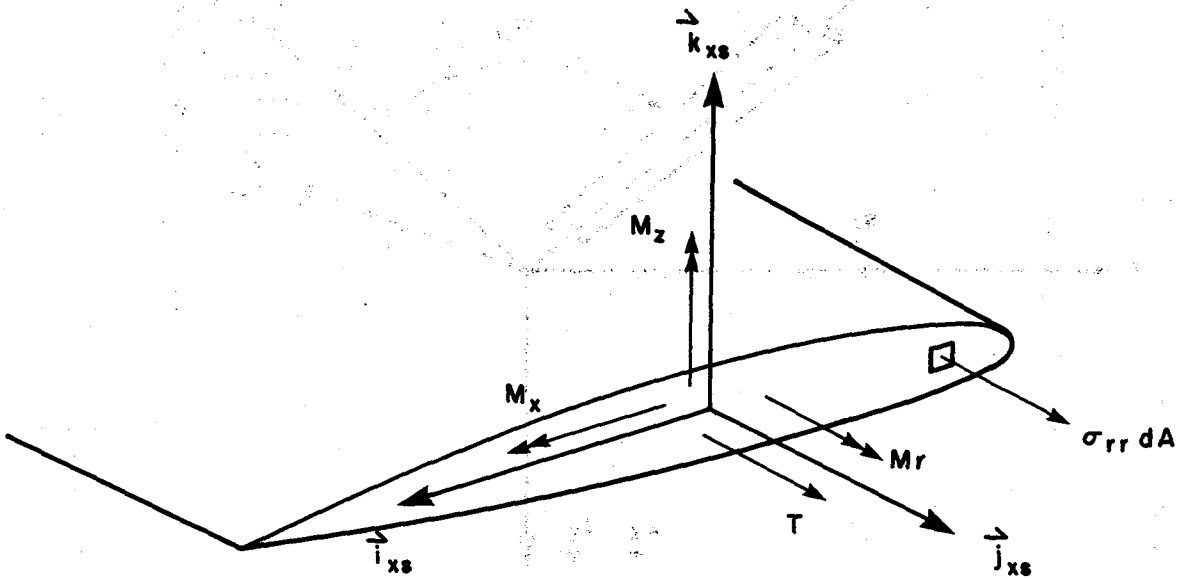

Figure 4.- Bending and torsion moments on blade section.

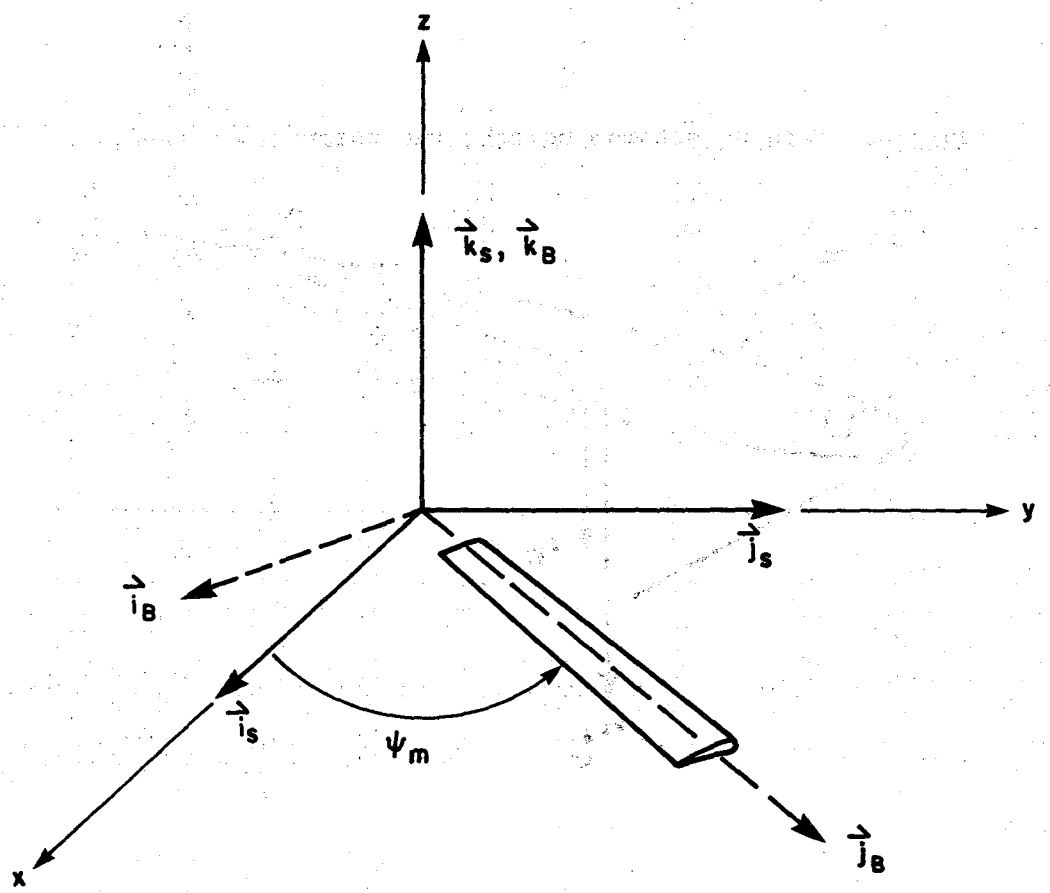

Figure 5.- Hub frame coordinate systems; shaft axes (nonrotating) and blade axes (rotating).

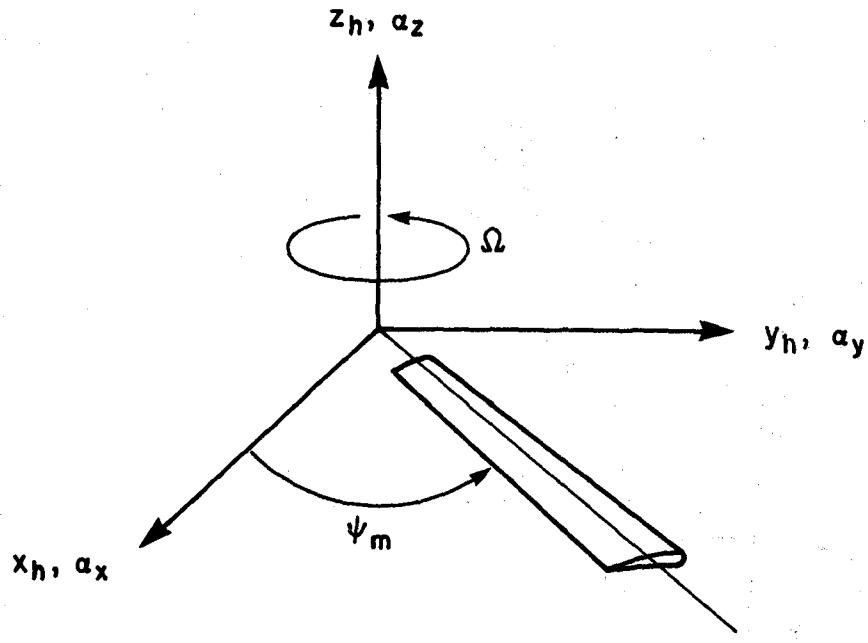

(a) Shaft motion.

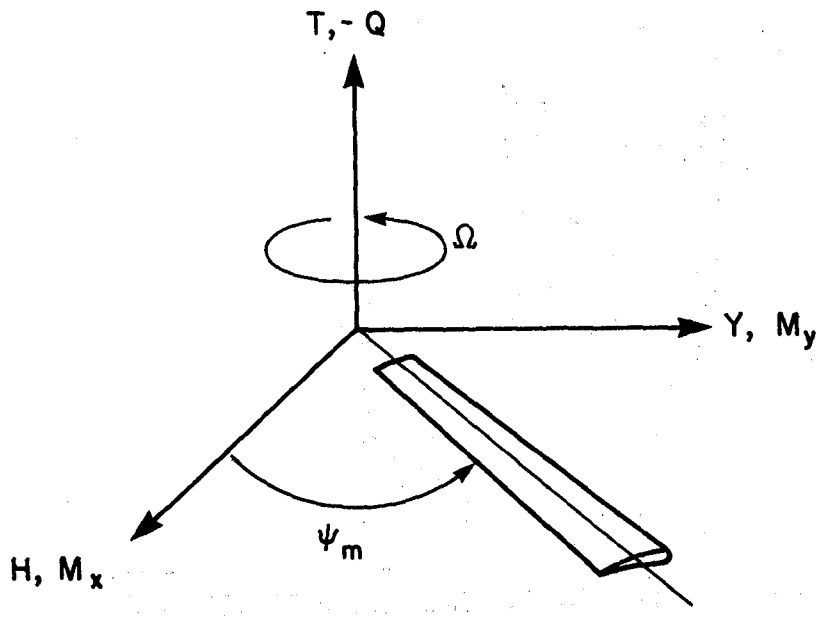

(b) Hub reactions.

Figure 6.- Notation and sign conventions for linear and angular shaft motion (displacements in an inertial frame) and forces and moments acting on rotor hub (in nonrotating frame).

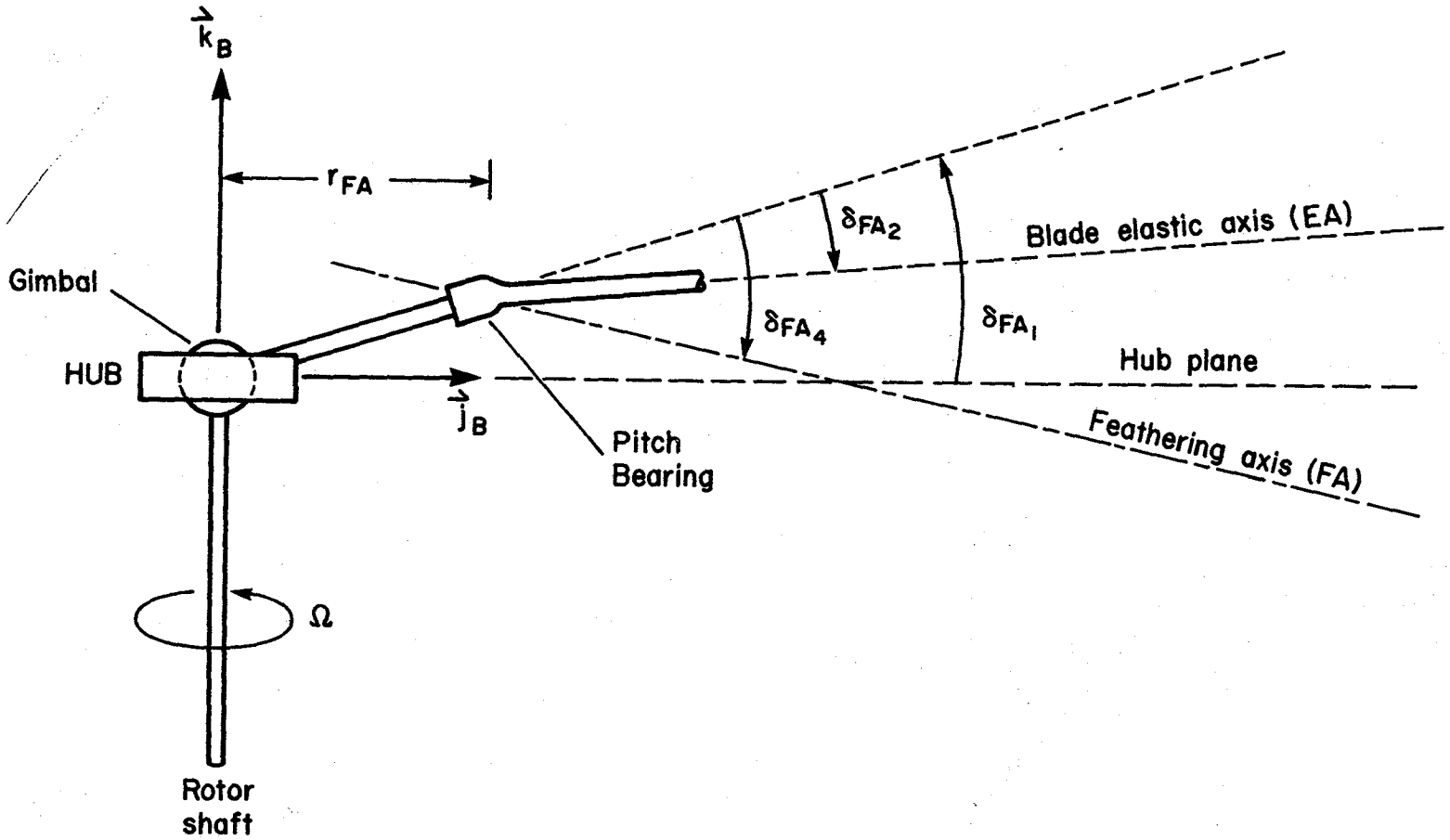

(a) Side view.

Figure 7.- Schematic of the rotor hub and root geometry showing the pitch bearing radial offset (r_{FA}), torque offset (x_{FA}), precone (δ_{FA_1}), droop (δ_{FA_2}), sweep (δ_{FA_3}), feathering axis droop (δ_{FA_4}), and feathering axis sweep (δ_{FA_5}). Only a single undistorted blade is shown without the gimbal undersling (z_{FA}); gimbal is dropped from the model for articulated and hingeless rotors.

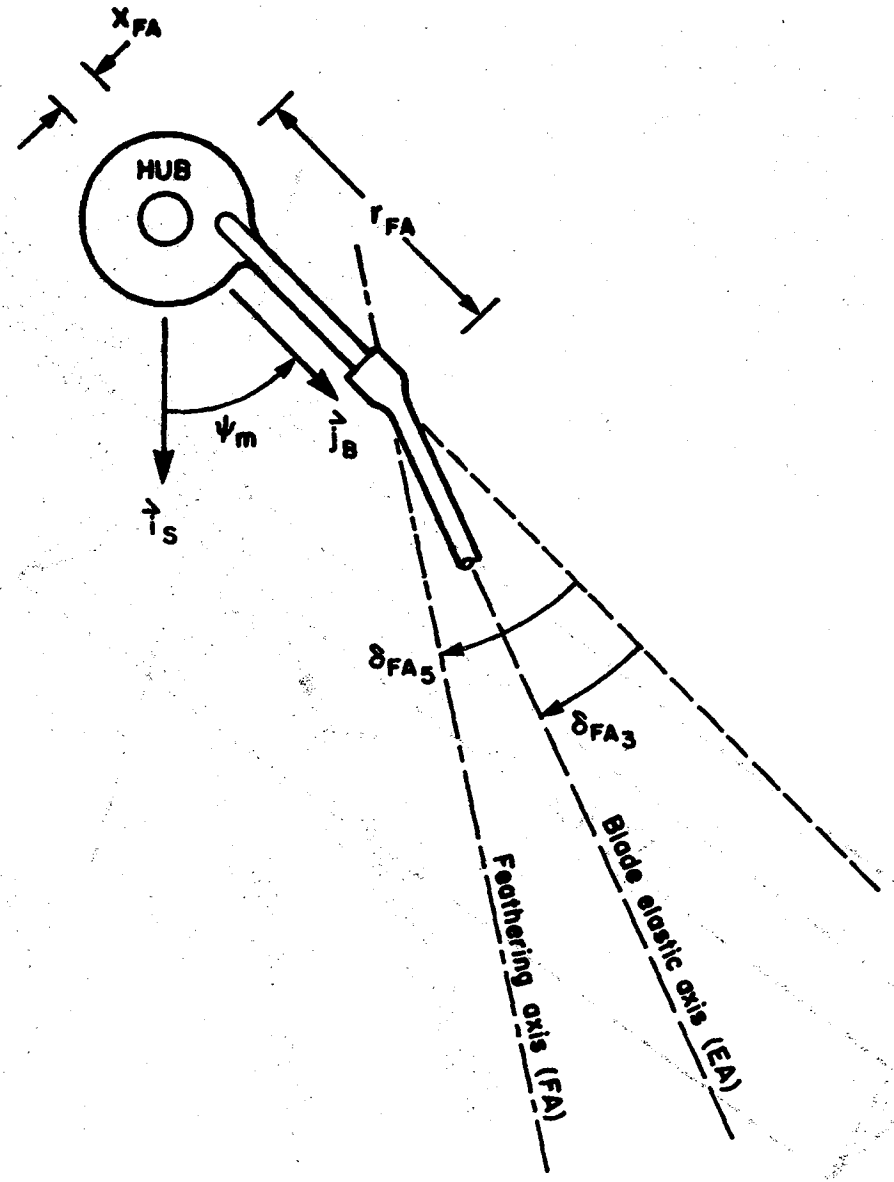

(b) Top view.

Figure 7.- Concluded.

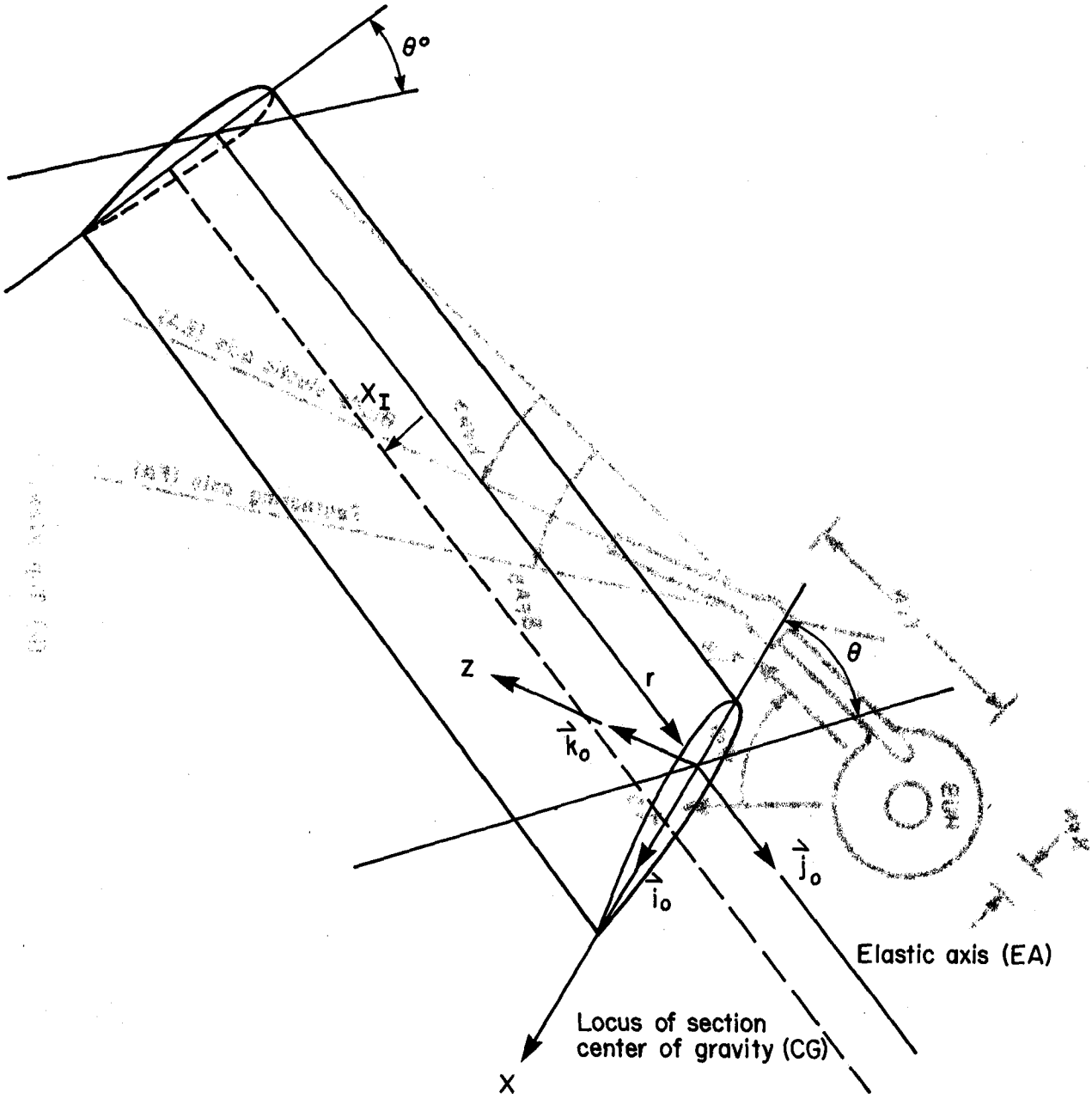

Figure 8.- Geometry of undeformed blade.

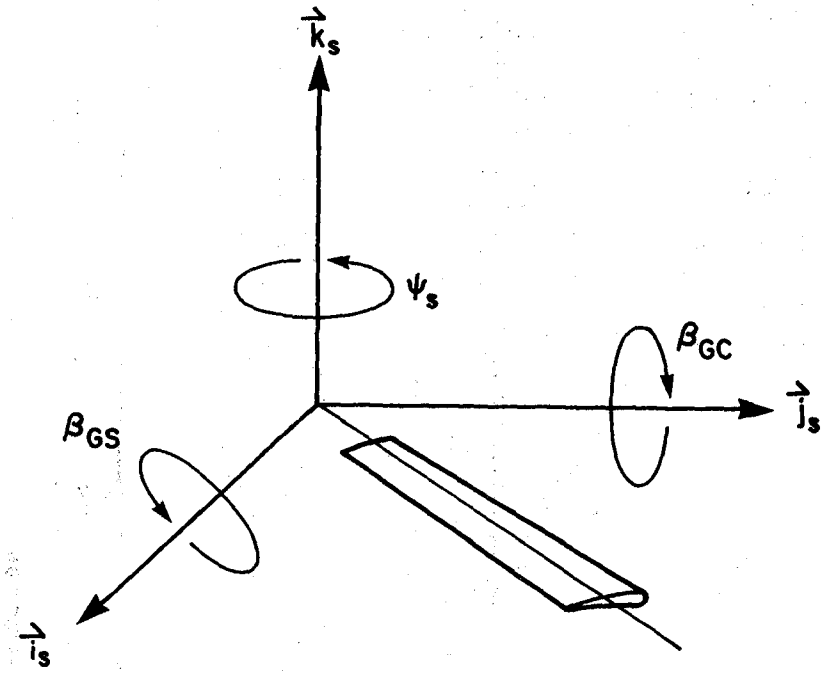

(a) Nonrotating frame.

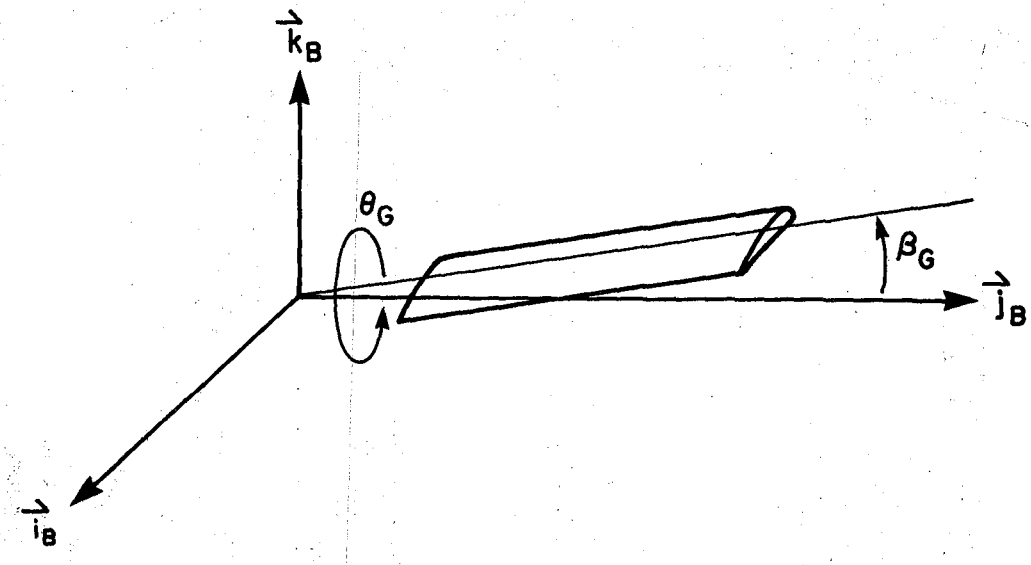

(b) Rotating frame.

Figure 9.- Notation and sign conventions for gimbal motion and rotor speed perturbation.

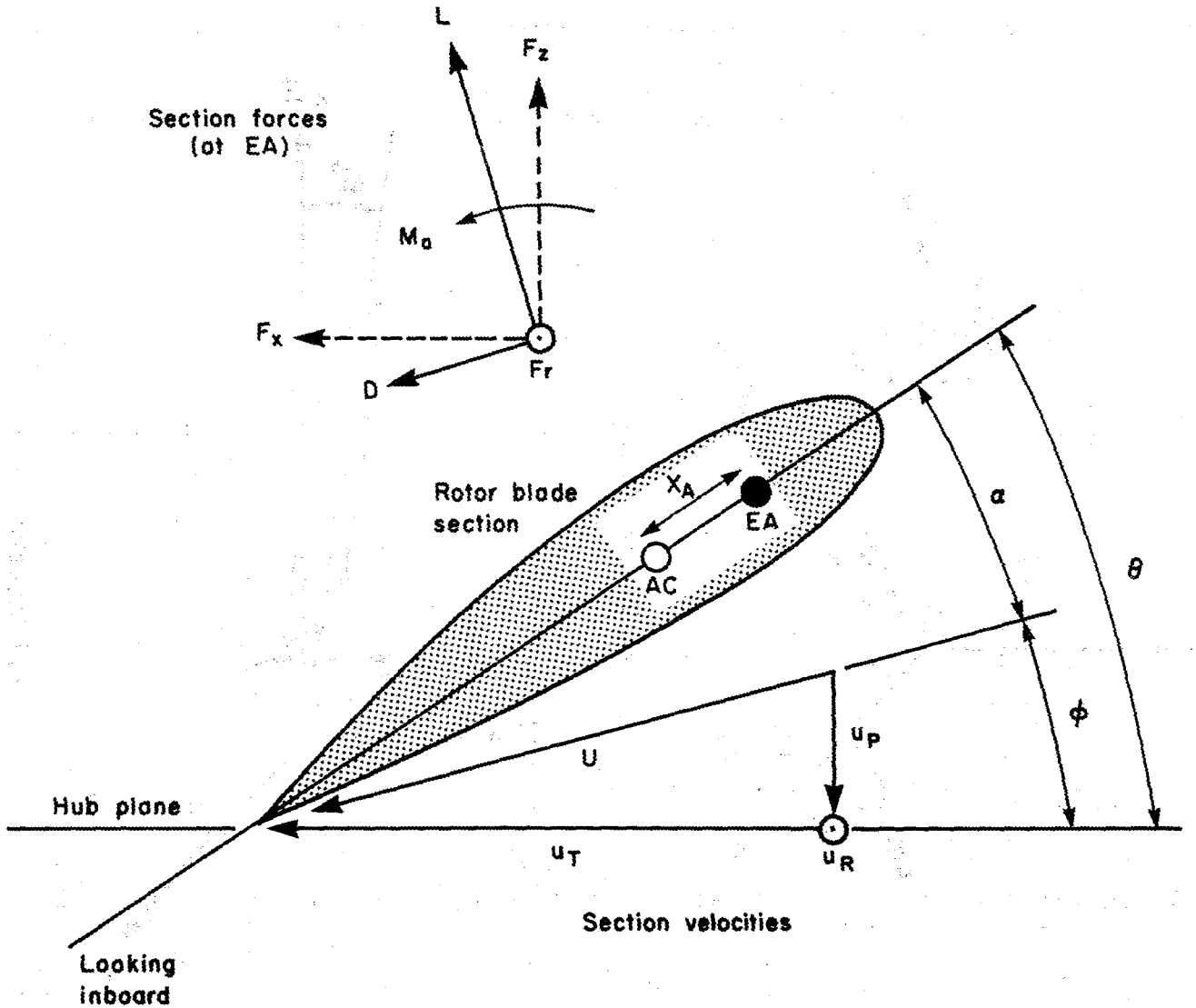

Figure 10.- Rotor blade section aerodynamics; notation and sign conventions for section forces and velocities.

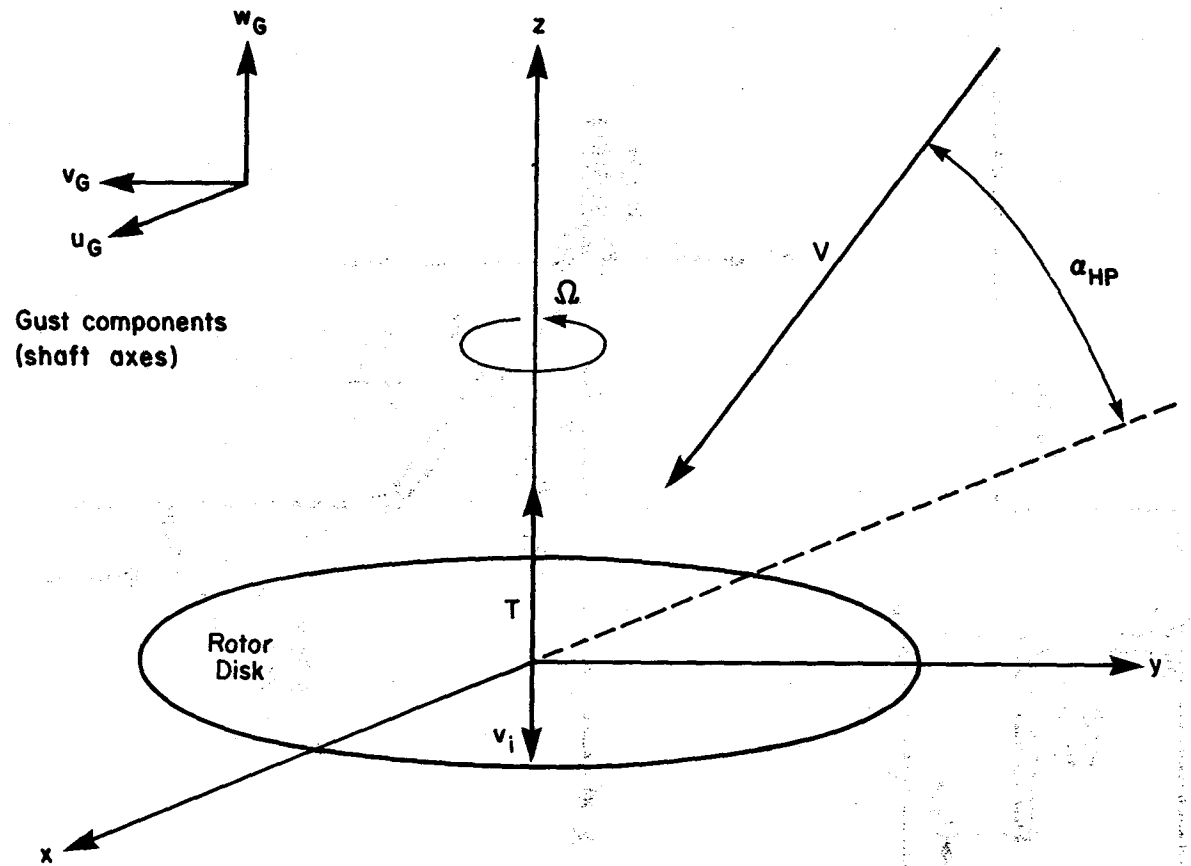

Figure 11.- Notation and sign conventions for rotor velocity and orientation (V and α_{HP}), induced velocity (v_i), and aerodynamic gust velocity components (u_G, v_G, w_G).

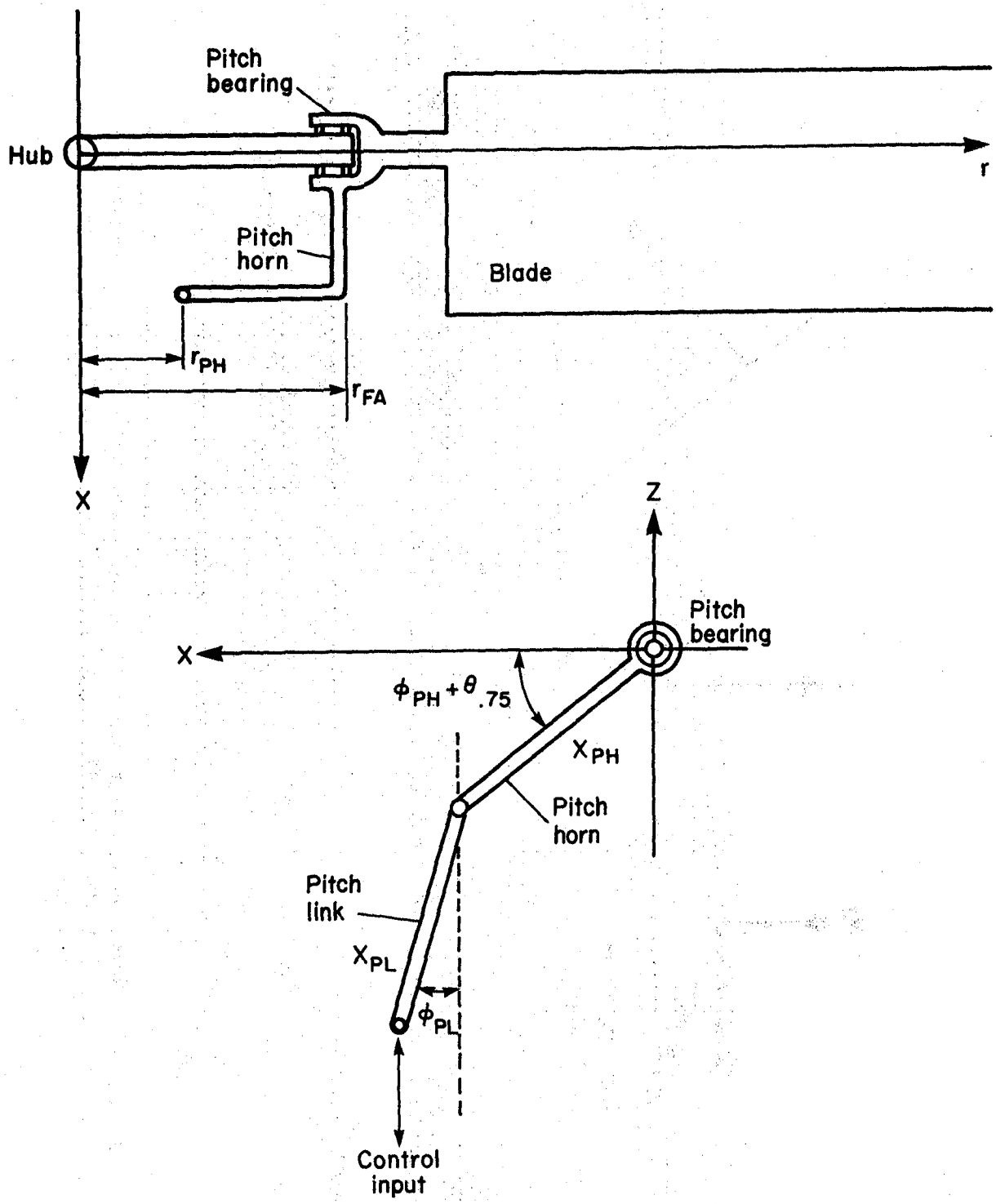

Figure 12.- Schematic of blade root and control-system geometry for calculating the kinematic pitch/bending coupling.

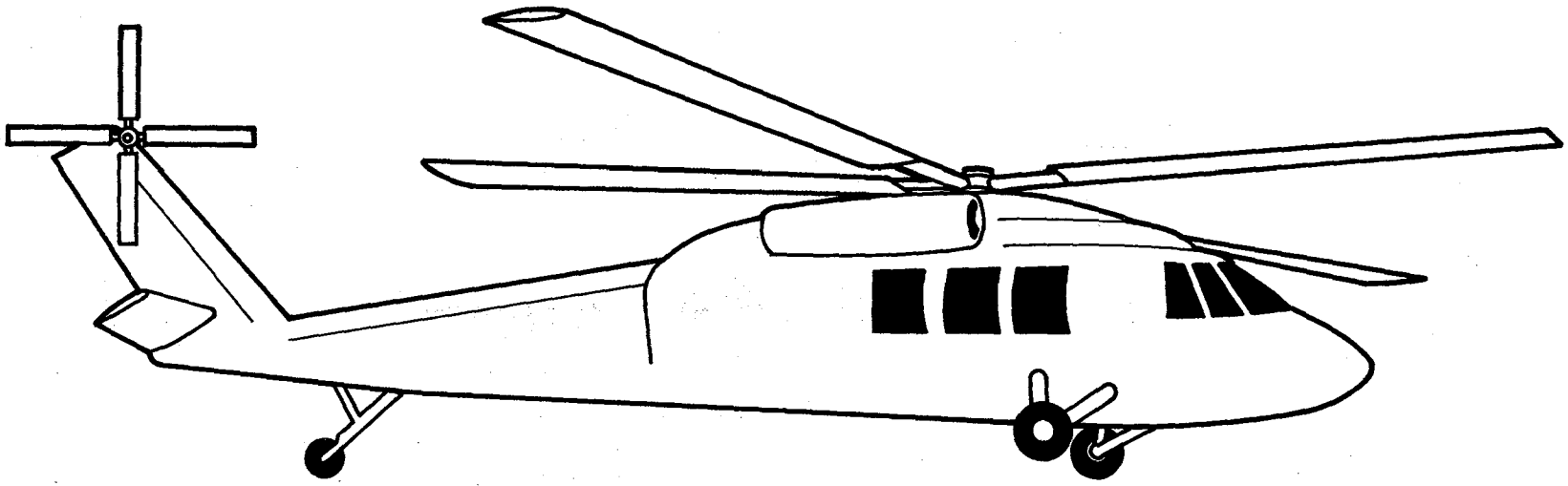

(a) Single main-rotor and tail-rotor helicopter.

Figure 13.- Typical rotorcraft configurations considered by the aeroelastic analysis.

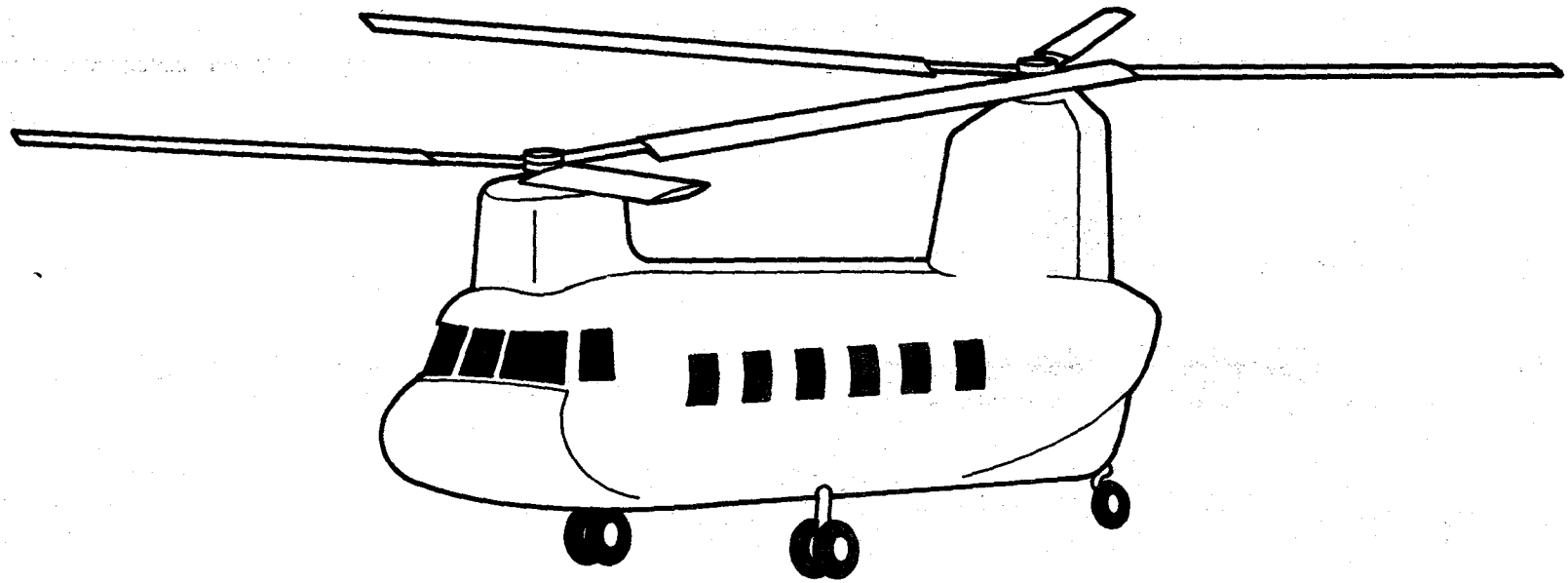

(b) Tandem main-rotor helicopter.

Figure 13.- Continued.

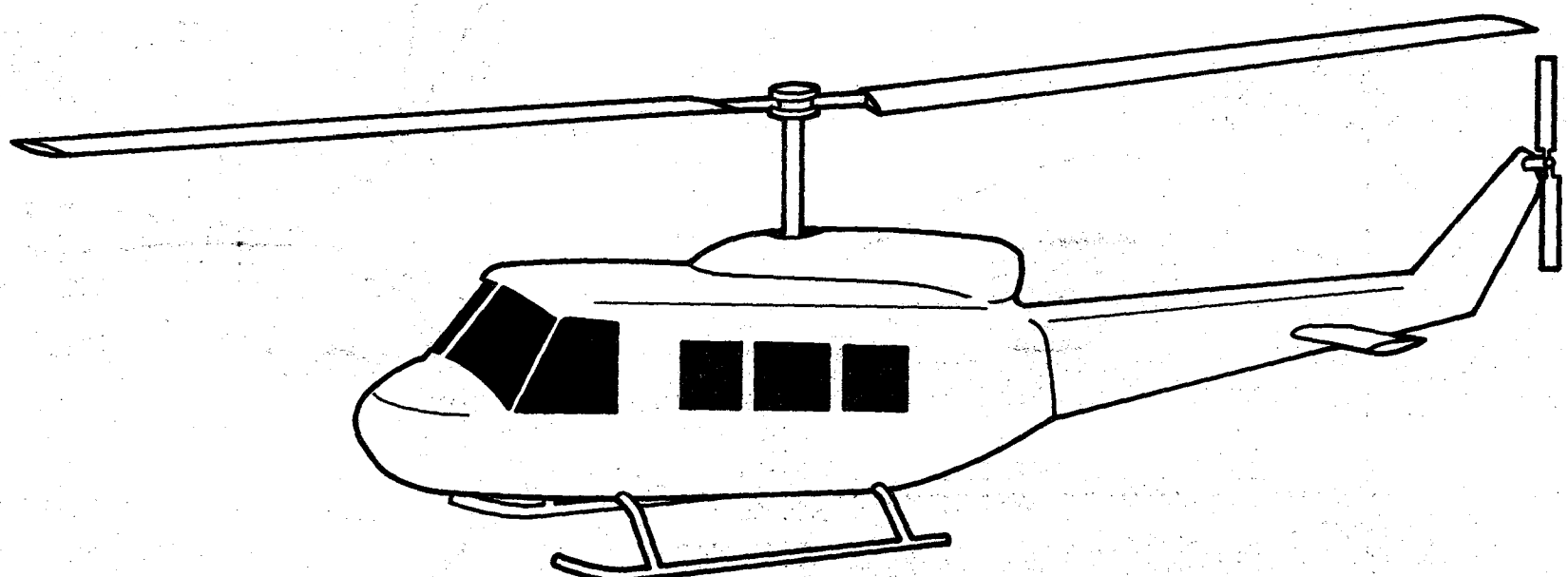

(c) Two-bladed main-rotor helicopter.

Figure 13.- Continued.

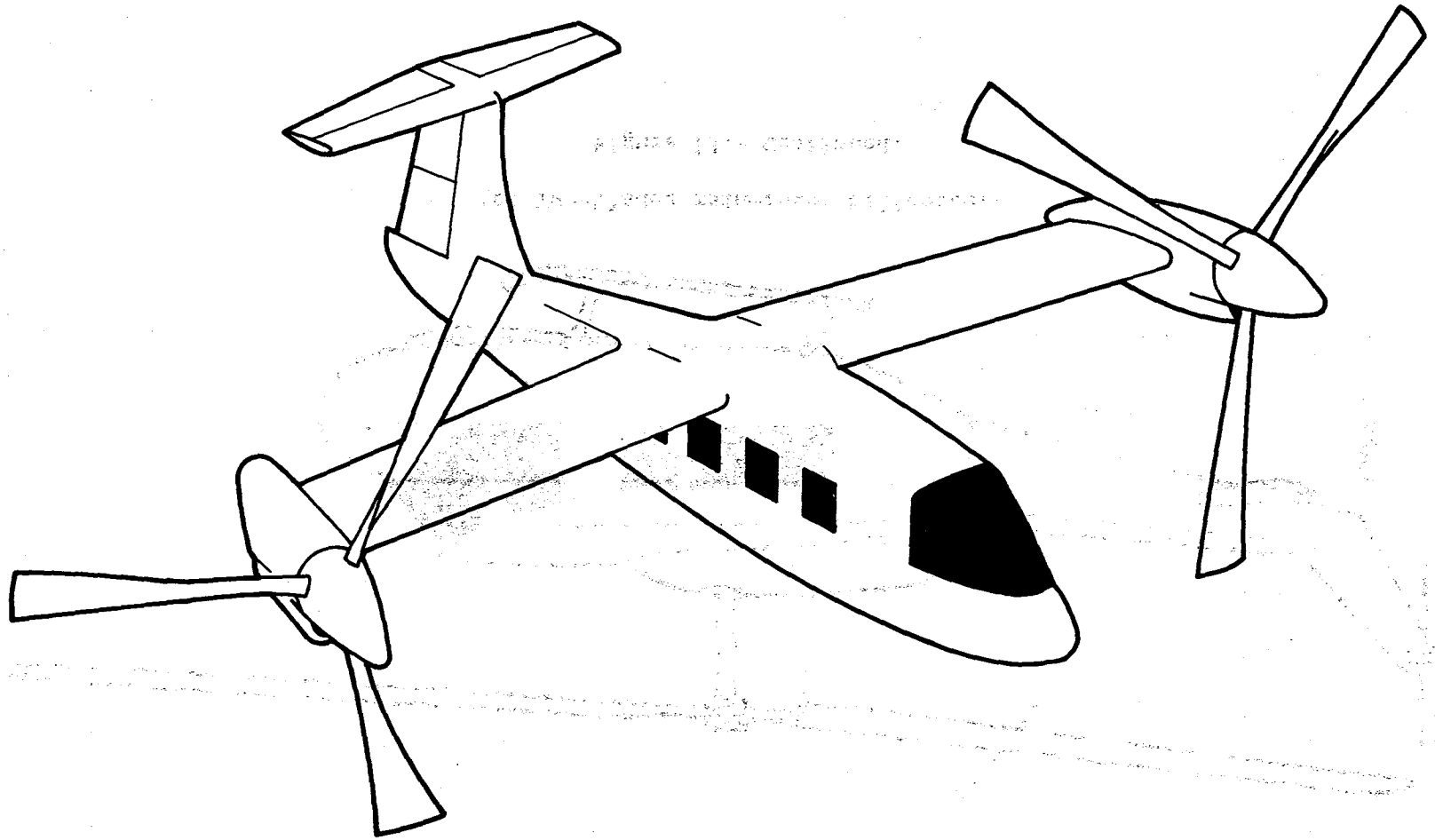

(d) Tilting proprotor aircraft.

Figure 13.- Concluded.

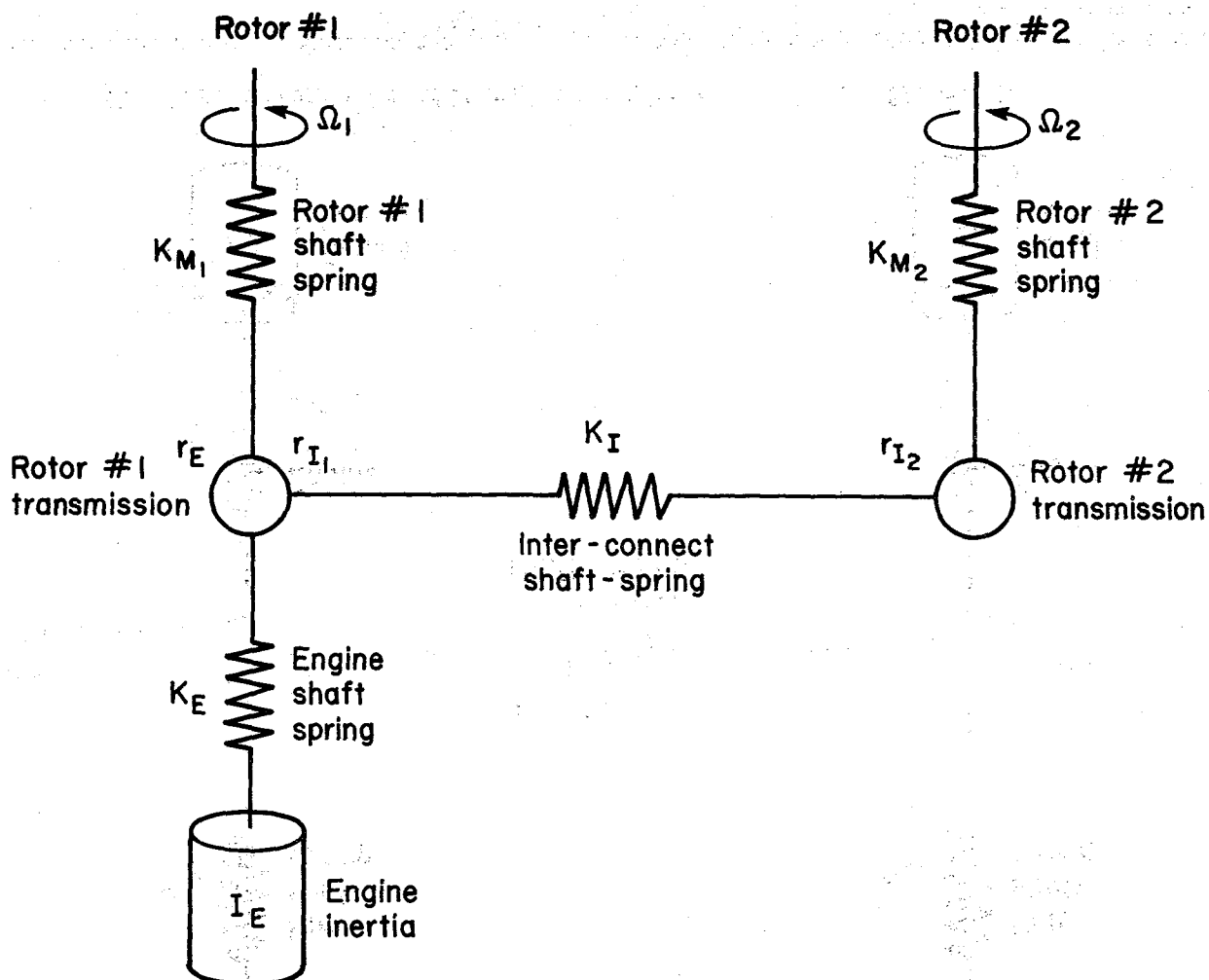

(a) Single main-rotor and tail-rotor or tandem main-rotor helicopter configurations.

Figure 14.- Schematics of rotorcraft transmission and engine dynamics models.

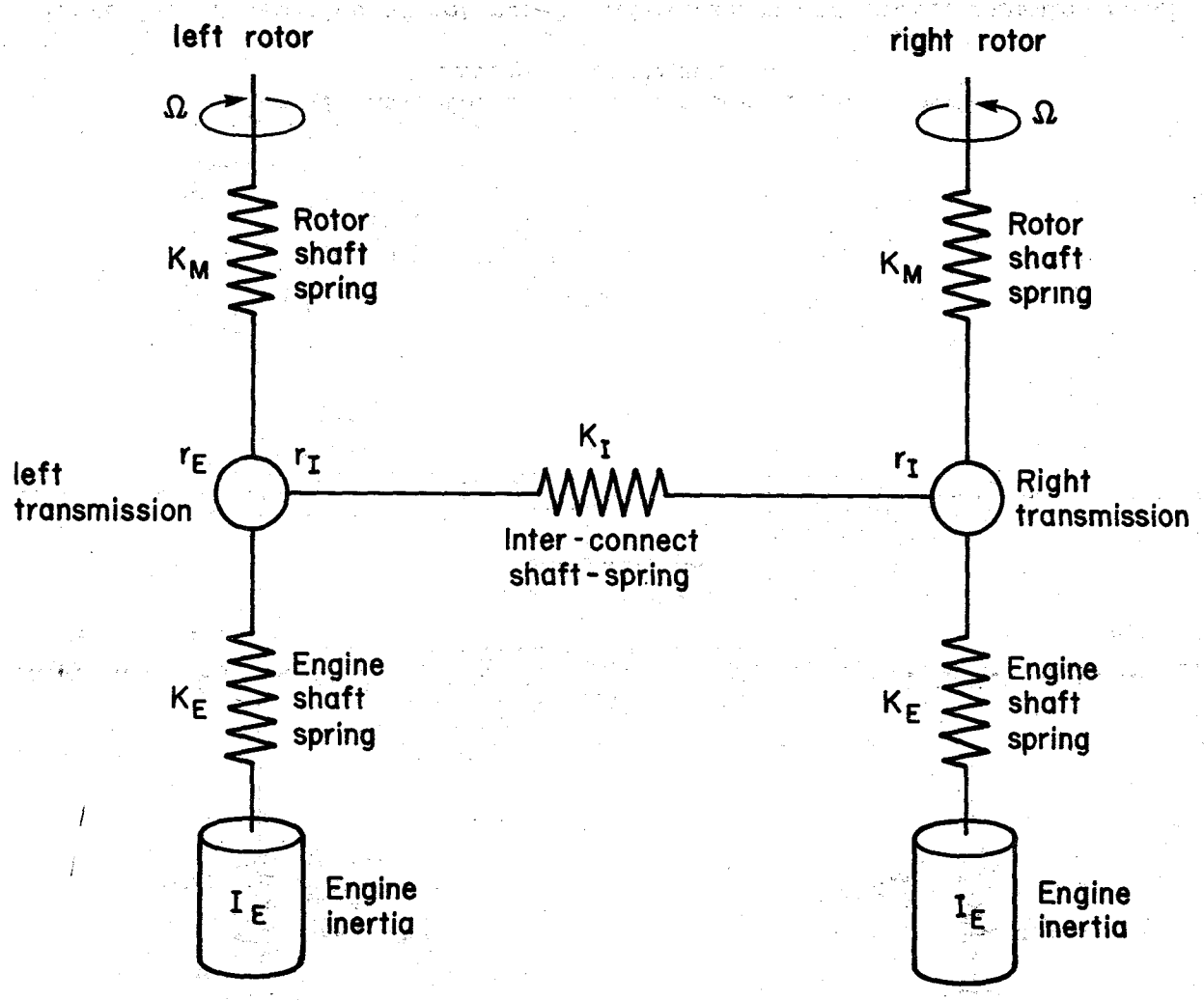

(b) Side-by-side or tilting proprotor aircraft configurations.

Figure 14.- Concluded.

*U.S. GOVERNMENT PRINTING OFFICE: 1977 - 735-004/16

NATIONAL AERONAUTICS AND SPACE ADMINISTRATION
WASHINGTON, D.C. 20546

OFFICIAL BUSINESS
PENALTY FOR PRIVATE USE $300

SPECIAL FOURTH-CLASS RATE
BOOK

POSTAGE AND FEES PAID
NATIONAL AERONAUTICS AND
SPACE ADMINISTRATION
451

POSTMASTER: If Undeliverable (Section 158 Postal Manual) Do Not Return

"The aeronautical and space activities of the United States shall be conducted so as to contribute . . . to the expansion of human knowledge of phenomena in the atmosphere and space. The Administration shall provide for the widest practicable and appropriate dissemination of information concerning its activities and the results thereof."

—NATIONAL AERONAUTICS AND SPACE ACT OF 1958

NASA SCIENTIFIC AND TECHNICAL PUBLICATIONS

TECHNICAL REPORTS: Scientific and technical information considered important, complete, and a lasting contribution to existing knowledge.

TECHNICAL NOTES: Information less broad in scope but nevertheless of importance as a contribution to existing knowledge.

TECHNICAL MEMORANDUMS: Information receiving limited distribution because of preliminary data, security classification, or other reasons. Also includes conference proceedings with either limited or unlimited distribution.

CONTRACTOR REPORTS: Scientific and technical information generated under a NASA contract or grant and considered an important contribution to existing knowledge.

TECHNICAL TRANSLATIONS: Information published in a foreign language considered to merit NASA distribution in English.

SPECIAL PUBLICATIONS: Information derived from or of value to NASA activities. Publications include final reports of major projects, monographs, data compilations, handbooks, sourcebooks, and special bibliographies.

TECHNOLOGY UTILIZATION PUBLICATIONS: Information on technology used by NASA that may be of particular interest in commercial and other non-aerospace applications. Publications include Tech Briefs, Technology Utilization Reports and Technology Surveys.

Details on the availability of these publications may be obtained from:

SCIENTIFIC AND TECHNICAL INFORMATION OFFICE

NATIONAL AERONAUTICS AND SPACE ADMINISTRATION

Washington, D.C. 20546