DRA

SPACE TRANSPORTATION SYSTEM PAYLOADS MISSION CONTROL STUDY

CONTINUATION PHASE A-1

VOLUME II-B

(NASA-CR-151027) STS PAYLOADS MISSION CONTROL STUDY CONTINUATION PHASE A-1. VOLUME 2-B: TASK 2. EVALUATION AND REFINEMENT OF IMPLEMENTATION GUIDELINES FOR THE SELECTED STS (TRW Defense and Space

N77-31233

HC A08/MF A01

Unclas

G3/16 15056

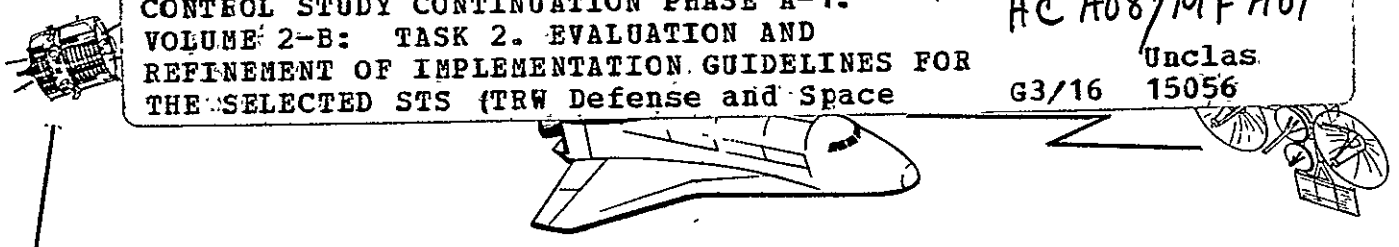

FINAL STUDY REPORT FOR TASK 2

EVALUATION AND REFINEMENT OF IMPLEMENTATION GUIDELINES FOR THE SELECTED STS PAYLOAD OPERATOR CONCEPT

DEC 1976
RECEIVED
NASA STI FACILITY
INPUT BRANCH

CONTRACT NAS9-14484

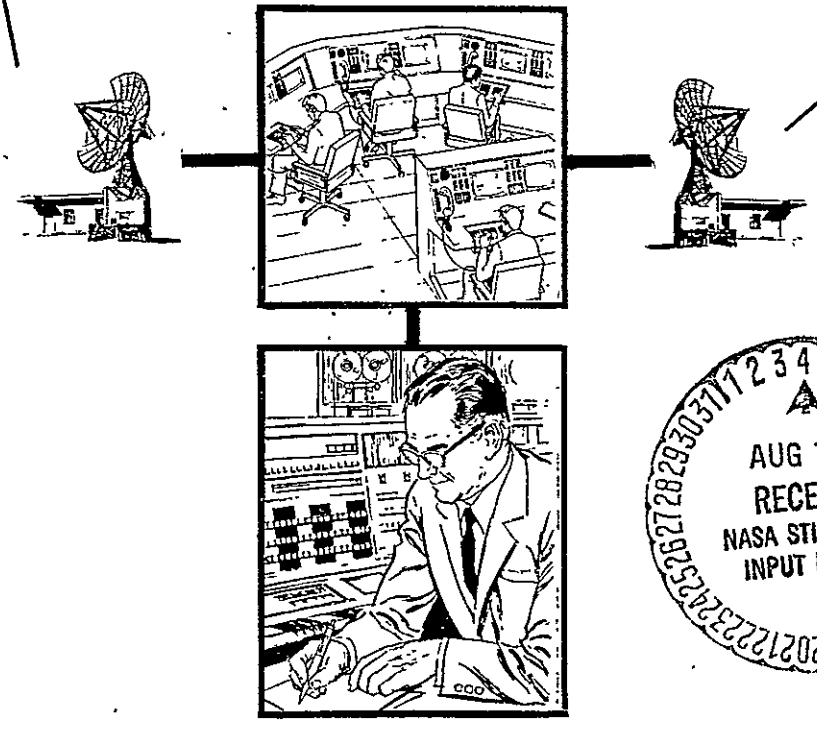

Prepared for

NATIONAL AERONAUTICS AND SPACE ADMINISTRATION

LYNDON B. JOHNSON SPACE CENTER
HOUSTON, TEXAS 77058

AUG 1977
RECEIVED
NASA STI FACILITY
INPUT BRANCH

August 1976

TRW
DEFENSE AND SPACE SYSTEMS GROUP
ONE SPACE PARK
REDONDO BEACH, CALIFORNIA

26904-H019-R0-00
Volume II-B

FINAL REPORT
FOR
STS PAYLOADS MISSION CONTROL STUDY
CONTINUATION PHASE A-1

TASK 2
EVALUATION AND REFINEMENT OF IMPLEMENTATION GUIDELINES FOR THE SELECTED STS PAYLOAD OPERATOR CONCEPT

NAS9-14484 AUGUST 1976

Prepared for
NATIONAL AERONAUTICS AND SPACE ADMINISTRATION
LYNDON B. JOHNSON SPACE CENTER
HOUSTON, TEXAS

Prepared by
TRW DEFENSE AND SPACE SYSTEMS GROUP

One Space Park
Redondo Beach, California

and

1110 NASA Road One
Houston, Texas

Approved: O L Brownlee
O. L. Brownlee
Study Manager
TRW Defense and Space
Systems Group
Redondo Beach, California
(213) 535-0378

Approved: L E Wood
L. E. Wood
Deputy Study Manager
TRW Defense and Space
Systems Group
Houston, Texas
(713) 333-3133

Approved: C. R. Hicks Jr.
C. R. Hicks, Jr.
Contracting Officer
Representative
Payloads Operations Division (CH)
(713) 483-5161

FOREWORD

This document represents one Section of the FINAL REPORT for the STS PAYLOADS MISSION CONTROL STUDY CONTINUATION PHASE A-1, prepared by TRW Defense and Space Systems Group under Contract NAS9-14484, with NASA, Lyndon B. Johnson Space Center. The complete list of documents that comprise the FINAL REPORT of this Study is as follows:

- Volume I - Integrating Summary Report
- Volume II-A - Study Task 1 - Joint Products and Functions for Preflight Planning of Flight Operations, Training and Simulations
- *Volume II-B - Study Task 2 - Evaluation and Refinement of Implementation Guidelines for the Selected STS Payload Operator Concept
- Volume II-C - Study Task 3 - Joint Preflight Activities in Preparation for STS Payload Flight Operations

* This Document

CONTENTS

Page

2.0 EVALUATION AND REFINEMENT OF IMPLEMENTATION GUIDELINES FOR THE SELECTED STS PAYLOAD OPERATOR CONCEPT (TASK 2). 2-1

2.1 DEFINE APPROACHES TO PAYLOAD OPERATOR CONTROL CENTER (POCC) DEVELOPMENT THAT ENCOURAGE EARLY STANDARDIZATION AND FACILITATE NASA-WIDE SYSTEM OF POCC'S (SUBTASK 2A). 2-1

2.1.1 Introduction 2-1

2.1.1.1 Study Guidelines for Subtask 2A 2-2

2.1.2 Approach to POCC Development 2-3

2.1.2.1 Approaches to POCC Standardization. 2-3
2.1.2.2 POCC Functional Standardization 2-5
2.1.2.2.1 POCC Functions 2-6
2.1.2.2.1.1 Common POCC Functions 2-9
2.1.2.2.1.2 Unique POCC Functions 2-23
2.1.2.2.2 Summary of Functional Standardization . . . 2-23
2.1.2.2.3 Advantages of Functional Standardization. . 2-39
2.1.2.2.4 Standard POCC (SPOCC) Network 2-39
2.1.2.3 Implementation Activity Network 2-41
2.1.2.3.1 System Characteristics 2-41
2.1.2.3.2 Drivers for System Implementation 2-45
2.1.2.3.3 Implementation Plan and Schedules 2-46
2.1.2.3.3.1 1977-1978 Activities. 2-46
2.1.2.3.3.2 Activities from 1979 through Mid-1982 . . . 2-50

2.1.3 Subtask 2A Summary Conclusions and Recommendations . . . 2-53

2.2 DETAIL OPERATIONAL INTERFACES BETWEEN STS OPERATOR AND PAYLOAD OPERATOR FOR PRELAUNCH AND FLIGHT PHASES (SUBTASK 2B). 2-55

2.2.1 Introduction 2-55

2.2.1.1 Study Guidelines for Subtask 2B 2-55
2.2.1.2 Approach. 2-56
2.2.1.3 Scope 2-57

2.2.2 Prelaunch Activities 2-59

2.2.2.1 General 2-59
2.2.2.2 Command Interface 2-59
2.2.2.2.1 JSC Payload Command Interface, Prelaunch Phase, KSC. 2-59
2.2.2.2.2 GSFC Payload Commands Interface, Prelaunch Phase, KSC. 2-63

CONTENTS (Continued)

		Page
2.2.2.2.2.1	Payload Arrival	2-63
2.2.2.2.2.2	Payload Installation	2-64
2.2.2.2.2.3	Interface Testing	2-64
2.2.2.2.2.4	KSC Interface Activity	2-69
2.2.2.2.3	JPL Payload Command Interface, Prelaunch Phase, KSC	2-69
2.2.2.2.3.1	Payload Arrival	2-69
2.2.2.2.3.2	Payload Installation	2-69
2.2.2.2.3.3	Interface Testing	2-70
2.2.2.2.4	DOD Payload Command Interface, Prelaunch Phase, KSC	2-73
2.2.2.3	Health Telemetry Interfaces	2-77
2.2.2.3.1	JSC Payload Health Telemetry Interface, Prelaunch Phase, KSC	2-77
2.2.2.3.2	GSFC Payload Health Telemetry Interface, Prelaunch Phase, KSC	2-77
2.2.2.3.2.1	Payload Arrival, Installation, and KSC Interface Activity	2-77
2.2.2.3.2.2	Interface Testing	2-81
2.2.2.3.3	JPL Payload Health Telemetry Interface, Prelaunch Phase, KSC	2-86
2.2.2.3.3.1	Payload Arrival and Installations	2-86
2.2.2.3.3.2	Interface Testing	2-86
2.2.2.3.4	DOD Payload Health Telemetry Interface, Prelaunch Phase, KSC	2-89
2.2.2.4	Science Telemetry Interfaces	2-93
2.2.2.4.1	JSC Payload Science Telemetry Interface, Prelaunch Phase, KSC	2-93
2.2.2.4.2	JSC Payload Science Telemetry Interface, Prelaunch Phase, VAFB	2-93
2.2.2.4.3	GSFC Payload Science Telemetry Interface, Prelaunch Phase, KSC	2-99
2.2.2.4.4	JPL Payload Science Telemetry Interface, Prelaunch Phase, KSC	2-99
2.2.2.4.5	DOD Payload Experiment Data Flow, Prelaunch Phase, KSC	2-105
2.2.3	Operational Activities	2-107
2.2.3.1	General	2-107
2.2.3.2	Command Interfaces	2-107
2.2.3.2.1	JSC Payload Command Interface, Operational Phase	2-107
2.2.3.2.2	GSFC Payload Interface, Operational Phase	2-112

CONTENTS (Continued)

		Page
2.2.3.2.3	JPL Payload Command Interface, Operational Phase	2-112
2.2.3.2.4	DOD Payload Command Interface, Operational Phase	2-117
2.2.3.3	Health Telemetry Interfaces	2-121
2.2.3.3.1	JSC Payload Health Telemetry Interface, Operational Phase	2-121
2.2.3.3.2	GSFC Payload Health Telemetry Interface, Operational Phase	2-121
2.2.3.3.3	JPL Payload Health Telemetry, Operational Phase	2-127
2.2.3.3.4	DOD Payload Health Telemetry Interface, Operational Phase	2-131
2.2.3.4	Science Telemetry Interfaces	2-133
2.2.3.4.1	JSC Payload Science Telemetry Interface, Operational Phase	2-133
2.2.3.4.2	GSFC Payload Science Telemetry Interface, Operational Phase	2-137
2.2.3.4.3	JPL Payload Science Telemetry Interface, Operational Phase	2-137
2.2.3.4.4	DOD Payload Experiment Telemetry Data Flow, Operational Phase	2-137
2.2.4	Subtask 2B Conclusions and Recommendations	2-145
2.2.5	Subtask 2B Summary	2-147
APPENDIX A - ACRONYMS AND ABBREVIATIONS		A-1
APPENDIX B - REFERENCES AND TECHNICAL CONTACTS		B-1

PRECEDING PAGE BLANK NOT FILMED

TABLES

		Page
2.1a	Common* Payload Operation Control Functions - DP Operating System	2-11
2.1b	Common* Payload Operation Control Functions - Communication Processing	2-12
2.1c	Common* Payload Operation Control Functions - Data Base Management	2-13
2.1d	Common* Payload Operation Control Functions - Man-Machine Interface	2-14
2.1e	Common* Payload Operation Control Functions - Simulation and Training	2-15
2.1f	Common* Payload Operation Control Functions - Testing and Checkout	2-16
2.1g	Common* Payload Operation Control Functions - Mission Planning/Flight Planning	2-17
2.1h	Common* Payload Operation Control Functions - Flight Support	2-18
2.1i	Common* Payload Operation Control Functions - Payload Operation and Control	2-19
2.1j	Common* Payload Operation Control Functions - Payload Command Processing	2-20
2.1k	Common* Payload Operation Control Functions - Telemetry Data Processing	2-21
2.1ℓ	Common* Payload Operation Control Functions - Experiment Operation and Control	2-22
2.1m	GSFC Unique Payload Operation Control Functions	2-24
2.1n	GSFC Experiment Dependent Unique Functions	2-27
2.1o	JSC Unique Payload Operation Control Functions	2-28
2.2p	JSC Experiment Dependent Unique Functions	2-29
2.1q	JPL Unique Payload Operation Control Functions	2-31
2.1r	Advantages/Disadvantages of POCC Standardization	2-40
2.2-1	Information Links, Command Interface, Prelaunch	2-67
2.2-2	Information Links, Payload Health Interface, Prelaunch	2-85

PRECEDING PAGE BLANK NOT FILMED

FIGURES

		Page
2.1-1	Payload Supported by Primary POCC's	2-7
2.1-2	POCC Support by Flight Phase, Activity Matrix - Primary and Backup POCC's	2-8
2.1-3	Standard POCC Functional Block Diagram	2-33
2.1-4	Limited Standardization with Backup Capability	2-35
2.1-5	POCC Standardization Alternatives	2-36
2.1-6	Standard POCC Hardware Architecture	2-38
2.1-7	Conceptual Hierarchy of a Standard POCC Network	2-43
2.1-8	SPOCC System Development Activity Network	2-47
2.2-1	Summary of Figures Depicting Interfaces with POCC's, Prelaunch and Operational	2-58
2.2-2	JSC Payload Command Interface, Prelaunch Phase, KSC	2-61
2.2-3	GSFC Payload Command Interface, Prelaunch Phase, KSC	2-65
2.2-4	JPL Payload Command Interface, Prelaunch Phase, KSC	2-71
2.2-5	DOD Payload Command Interface, Prelaunch Phase, KSC	2-75
2.2-6	JSC Payload Health Telemetry Interface, Prelaunch Phase, KSC	2-79
2.2-7	GSFC Payload Health Telemetry Interface, Prelaunch Phase, KSC	2-83
2.2-8	JPL Payload Health Telemetry Interface, Prelaunch Phase, KSC	2-87
2.2-9	DOD Payload Health Telemetry Interface, Prelaunch Phase, KSC	2-91
2.2-10	JSC Payload Science Telemetry Interface, Prelaunch Phase, KSC	2-95
2.2-11	JSC Payload Science Telemetry Interface, Prelaunch Phase, VAFB	2-97

FIGURES (Continued)

		Page
2.2-12	GSFC Payload Science Telemetry Interface, Prelaunch Phase, KSC	2-101
2.2-13	JPL Payload Science Telemetry Interface, Prelaunch Phase, KSC	2-103
2.2-14	Payload Experiment Data Flow, Prelaunch Phase, DOD Payload, KSC	2-106
2.2-15	JSC Payload Command Interface, Operational Phase	2-109
2.2-16	GSFC Payload Command Interface, Operational Phase	2-113
2.2-17	JPL Payload Command Interface, Operational Phase	2-115
2.2-18	DOD Payload Command Interface, Operational Phase	2-119
2.2-19	JSC Payload Health Telemetry Interface, Operational Phase	2-123
2.2-20	GSFC Payload Health Telemetry Interface, Operational Phase	2-125
2.2-21	JPL Payload Health Telemetry Interface, Operational Phase	2-129
2.2-22	DOD Payload Health Telemetry Interface, Operational Phase	2-132
2.2-23	JSC Payload Science Telemetry Interface, Operational Phase	2-135
2.2-24	GSFC Payload Science Telemetry Interface, Operational Phase	2-139
2.2-25	JPL Payload Science Telemetry Interface, Operational Phase	2-141
2.2-26	DOD Payload Experiment Telemetry Data Flow, Operational Phase	2-143

2.0 EVALUATION AND REFINEMENT OF IMPLEMENTATION GUIDELINES FOR THE SELECTED STS PAYLOAD OPERATOR CONCEPT (TASK 2)

NASA selected a preferred flight control concept for STS payloads from the basic study and TRW provided general guidelines for implementation during 1980 through 1991. This follow-on study evaluates and refines those implementation guidelines with emphasis on standardized approaches (Subtask 2A) and definition of operational interfaces between STS Operator and Payload Operator elements (Subtask 2B).

2.1 DEFINE APPROACHES TO PAYLOAD OPERATOR CONTROL CENTER (POCC) DEVELOPMENT THAT ENCOURAGE EARLY STANDARDIZATION AND FACILITATE NASA-WIDE SYSTEM OF POCC'S (SUBTASK 2A)

The purpose of Subtask 2A is to define approaches to Payload Operations Control Center (POCC) development that will permit early standardization of system architecture and identify systems that will facilitate the earliest achievement of a fully integrated NASA-wide system of STS POCC's.

2.1.1 Introduction

With the advent of the Space Transportation System (STS), future payloads will benefit from economical and highly standardized methods of launch into orbit, servicing and systems support on-orbit, and retrieval, as required by the specific missions.

In addition to the standard operations made possible by the STS, GSFC will make available a standard "bus" for free-flying payloads through the design of a multi-mission modular spacecraft.

With the steps being taken toward standardization of launch vehicles, powered upper stages, Spacelab payload support systems and large automated spacecraft for free-flyers, it seems logical that the ground facilities for support of STS payloads should evolve toward a Standard Payload Operations Control Center (SPOCC).

This subtask addresses the approach to optimum standardization of POCC's for all classes of payloads.

2.1.1.1 Study Guidelines for Subtask 2A

In addition to the guidelines for the study, the following special guidelines have been used for Subtask 2A.

a. The target date for completion of implementation of POCC standardization is mid-1982 since this is approximately the 50-percent point in achieving the traffic model flight rate.

b. The OFT flights have not been considered from the standpoint of POCC implementation

*c. JSC, GSFC and JPL have been designated as the primary NASA Payload Operations Centers (POC's) for Spacelab, Automated Earth Orbit (including geosynchronous), and Planetary, respectively.

d. It is assumed that existing POCC's at JSC, GSFC and JPL along with existing plans for augmentation will be sufficient to handle payload traffic. This study addresses the evolutionary change-over to standardization and improvement of efficiency, with the attendant potential cost savings, rather than the sufficiency of the existing and planned capabilities of the Centers to meet functional requirements.

*Note: Definition of POCC versus POC. A Payload Operations Control Center (POCC) is the focal point of payload flight operations, typically a room equipped with controls and displays, telephones, etc, and constitutes one element of a Payload Operations Center (POC). The POC, i.e., JSC (Spacelab), GSFC (Automated Earth Orbit-LEO and GEO) or JPL (Planetary) also provides other capabilities, such as Experiment Data Processing, Flight Maneuver Computations, Orbit Determination, etc., in addition to the POCC's.

2.1.2 Approach to POCC Development

Task f of the basic study has defined general guidelines for an implementation plan for STS Payload Flight Control with special emphasis on the Payload Operation Control Center. Utilizing the same representative payloads, flight types and primary NASA Centers addressed in the basic study, the objective of Subtask 2A is to refine and detail the implementation guidelines for cost effective Payload Operations Control Centers (POCC's).

An approach to POCC design and development will be presented using maximum practical standardization of system architecture, software and hardware leading to the concept of the optimally Standard POCC (SPOCC) including both common and unique POCC functions. A typical SPOCC associated with any one of the three primary NASA Centers, namely JSC, GSFC and JPL, will consist of the same common POCC functions augmented by a variable subset of unique payload and experiment dependent functions. The following study will define the functional characteristics of the Standard POCC and attempt to identify the common functions as well as the various subsets of unique functions relative to each POCC type based on presently planned payload requirements.

2.1.2.1 Approaches to POCC Standardization

A key concept formulated in the basic study toward implementing a cost effective NASA-wide POCC System for STS payloads is the idea of POCC standardization. The concept becomes more attractive for operations during the later years of the STS era when payloads are launched more frequently, are of a longer duration and require a greater extent of processing capability and interface control. Under these circumstances, the idea of payload-dedicated POCC's is no longer justifiable. Especially from a cost point of view, some level of POCC standardization is necessary to allow for simple and relatively inexpensive design, development and upgrading of the capabilities for the required

network of POCC's. POCC standardization offers the advantages of a simple, efficient, cost-effective approach for POCC development to meet increased loading requirements.

There are various ways of achieving POCC standardization:

a. Functional standardization where an attempt is made to standardize the majority of POCC functions. A small percentage of functions are assumed unique to the class of payload and nature of the experiments.

b. Procedural standardization where operational procedures to monitor, command and control the payload and to a certain extent the experiment are standardized. Included in such a standardization are the command and control philosophy, payload command sequences with respect to flight type, experimental procedures with respect to scientific experiments, and the man-machine interface.

c. Hardware configuration standardization where the processing hardware and peripherals, hardware interfaces and essentially the POCC hardware architecture are standardized.

d. Communication standardization where an attempt is made to standardize all external interfaces to the NASA Centers as much as practically possible, leading to a common communication network with standards for communications, transfer protocols and data formats.

e. Standardization relative to primary payloads of interest. All GSFC POCC's would be primarily standardized to handle Automated Earth Orbit payloads. All JSC POCC's would be primarily standardized to handle Spacelab payloads. All JPL POCC's would be primarily standardized to handle Planetary payloads. A secondary objective might be to allow POCC's, for each POC, the capability to handle to some extent another payload class not assigned to that Center on a primary basis.

Full POCC standardization, consisting of a mix of the various concepts presented in this paragraph and allowing each POCC to handle any payload, is not practically advantageous due to cost, added inflexibility, especially from a user's point of view, and extensive planning and development effort.

The approach to be taken in this subtask will be to find the optimum limited standardization approach assuming the planned payload types, the number and duration of the payload flights, the present POCC capabilities, the desired POCC objectives and the allowable timeframe for POCC development.

The objectives here are to lay the ground rules for functional standardization for all primary POCC's aiming toward standard data processing software and standard architecture for processing hardware and peripherals, and present a plan for SPOCC system development. Standardization will be primarily directed toward POCC's of the same class, i.e., Spacelab, Automated Earth Orbiting or Planetary. Limited functional standardization will be applied to these POCC's and their independent capability to handle primary as well as secondary payloads will be explored.

2.1.2.2 POCC Functional Standardization

In order to perform the desired functional standardization and derive a model for a standard POCC (SPOCC), all functions allocated to the POCC versus the STS Flight Operator, should be reviewed for all planned payloads and experiments and for each of the three POCC classes. For each class, common and unique functions should be identified, resulting in a model for the standard POCC for each POCC class.

The three standard POCC models should then be further analyzed for functional commonality leading toward a unique POCC model for all POCC classes. The common functions of this model should be common for all POCC's. This standard POCC model could be ideally used in the development of a cost-effective NASA-wide network of Payload Operation Control Centers.

As a guideline for this subtask, we are going to consider only the three primary NASA Centers, namely JSC, GSFC and JPL, and assume that all planned payloads are essentially allocated among these three Centers.

Non-NASA payloads are allocated to a unique non-NASA facility. Figure 2.1-1 shows the three NASA Centers and the payloads allocated to each. In this payload model, GSFC is assumed to be the primary payload operator for Automated Earth Orbiting payloads, JSC for Spacelab payloads and JPL for Planetary payloads. Figure 2.1-2 indicates the related POCC versus Flight Phase activity matrix. This matrix has been expanded to include not only the support of primary payload classes assigned, but secondary or backup POCC support to another Center.

2.1.2.2.1 POCC Functions

A review of all planned payloads was performed to identify top level POCC functions required for payload operation. All payload-related ground functions were identified.

The following is a list of major POCC functional areas:

a. Data Processing Executive Function which controls all data processing activities and supports all application functions.

b. Communication function which specifies ground rules for data transfer and coordinates all data communications external to a POCC.

c. Data Base Management Function which maintains the POCC data bases.

d. Man-Machine Interface Functions which control and coordinate all man-machine interactions.

e. Simulation Function responsible for providing drivers and algorithms for simulation of engineering subsystems, experimental procedure and mission plans.

f. Testing Function responsible for POCC subsystems, communications network, payload spacecraft and experimental subsystems checkouts.

g. Mission Planning consisting of all preflight planning activities in support of payload operations.

h. Flight Support Function which supports the STS Operator functions during Orbiter flight and analyzes Orbiter flight data; it also provides support for POC processing of tracking data, attitude and orbit data, flight maneuvers computations and ephemeris data.

FLIGHT TYPE / PRIMARY POCC LOCATIONS	SPACELAB				AUTOMATED EARTH ORBIT (LEO ONLY)						AUTOMATED IUS/SSUS/TUG (AEO/GEO/PLANETARY) **			
	A	B	C	D	E	F	G	H	I	J*	K	L	M	N
JSC	ATL	AMPS	SO	SO SEOPS HEA						LS (SPACE-LAB)				
GSFC					DELIVER EOS	DELIVER ST/SI RETRIEVE HEAO-C	SERVICE EOS	SERVICE ST	DELIVER BESS 2-MINI-LAGEOS FFTO	DELIVER EXPLORER				
JPL												MARINER		PIONEER
NON-NASA		SP (INT'L)								DELIVER STP (DOD)	DISASTER WARNING COMSAT		TRAFFIC MGMT INTELSAT	

AEO - AUTOMATED EARTH ORBIT
GEO - GEOSYNCHRONOUS EARTH ORBIT
LEO - LOW EARTH ORBIT

* J IS A "MULTI-CARGO" FLIGHT, CONTAINING SPACELAB LS WITH AEO DELIVERIES OF EXPLORER AND STP (DOD).
** L AND N ARE PLANETARY, K AND M ARE MULTI-SATELLITE, ALSO REQUIRING POWERED UPPER STAGE.

Figure 2.1-1. Payload Supported by Primary POCC's

FLIGHT TYPE	SPACELAB					AUTOMATED EARTH ORBIT								AUTOMATED IUS/SSUS/TUG								
FLIGHT PHASE / PRIMARY POCC LOCATIONS	ASCENT	ON-ORBIT ACTIVATION OF CHECKOUT	ON-ORBIT OPERATIONS	PAYLOAD DEACTIVATION	REENTRY	ORBITER ASCENT	ORBITER ON-ORBIT ACTIVATION OF CHECKOUT	PAYLOAD DEPLOYMENT	PAYLOAD OPERATIONS	PAYLOAD RENDEZVOUS & SERVICING	PAYLOAD RETRIEVAL	PAYLOAD DEACTIVATION	ORBITER REENTRY	IUS/SSUS/TUG - PAYLOAD DEPLOYMENT	IUS/SSUS/TUG - ASCENT	IUS/SSUS/TUG ORBIT ACTIVATION & CHECKOUT	PAYLOAD DEPLOYMENT	PAYLOAD INJECTION	PAYLOAD OPERATION	TUG DEORBIT	TUG RETRIEVAL	TUG/SSUS/IUS DEACTIVATION
JSC	P	P	P	P	P	B	B	B	B	B	B	B	B									
GSFC	B	B	B	B	B	P	P	P	P	P	P	P	P	P	P	P	P	P	P	P	P	P
														(AUTO EO/GEOSYNC ONLY)								
JPL		B	B	B				B	B					P	P	P	P	P	P/B	P	P	P
														(P FOR PLANETARY, B FOR AEO)								
NON-NASA		P	P	P			P	P	P			P					P	P	P			

LEGEND: P = PRIMARY, B = BACKUP POCC

Figure 2.1-2. POCC Support by Flight Phase, Activity Matrix - Primary and Backup POCC's

i. Payload Operation and Control Function which monitors all payload spacecraft engineering subsystems, analyzes spacecraft condition, and initiates and controls spacecraft guidance activities (in our context payload is synonymous to spacecraft which houses all the engineering and experiment subsystems).

j. Payload Command Function responsible for the generation of all payload commands for the spacecraft as well as the experiment.

k. Telemetry Function responsible for the monitoring and preprocessing of telemetry data.

l. Experiment Operation and Control Function which monitors the experimental data, controls and coordinates the experimental activities and preprocesses the scientific data.

m. Status Monitoring Function responsible for keeping track of the status of the entire payload system and operation, and related ground stations.

2.1.2.2.1.1 Common POCC Functions

Following the review of POCC functional areas, all similar functions were grouped into representative subsets for each of the three major payload classes separately.

Similar subsets for all three classes were analyzed for commonality. Similar functions within subsets were grouped, leading to sets of functions common to all payloads irrespective of payload class.

The following is a summary list of functions common to all POCC's:

a. Data Processing (DP) Operating System comprising the executive for data processing including task scheduling, interrupt handling error recovery, and peripheral coordination.

b. Communication Processing consisting of monitoring all communication interfaces, maintaining the communication integrity and preprocessing communication data; and performing network control.

c. Data Base Management capable of supporting local as well as centralized data base creation, maintenance and update.

d. Man-Machine Interface comprising operator command validation and display formatting into a standard set of formats.

e. Simulation of standard payload engineering and scientific subsystem models for operator training and system exercise.

f. Testing of standard system operational procedures, engineering subsystems and scientific equipments through generation of standard test commands and analysis of test data.

g. Off-line Mission Planning comprising the analysis of external support, user requirements and Orbiter/payload system; generation of standard mission and contingency plans, command sequences, experimental schedules and development of standard operational procedures.

h. Flight support providing standard support to the STS Operator; analyzing Orbiter flight data; monitoring and evaluating POC processed data such as payload ephemeris, attitude and orbit data, tracking and flight maneuver data; monitoring payload/Orbiter function and status.

i. Payload Operation and Control comprising the monitoring and analysis of standard payload spacecraft engineering functions and subsystems; controlling the operation and guidance of the spacecraft, evaluating spacecraft condition; monitoring and coordinating the payload mission.

j. Payload Command Processing consisting of the standard generation and monitoring of outgoing payload commands.

k. Telemetry Data Processing consisting of the standard monitoring and preprocessing of incoming telemetry data.

l. Experiment Operation and Control including the monitoring of standard scientific equipment, the control of standard experimental procedures and the gross analysis of experimental data.

m. Status monitoring of the entire system; supervising data recordings; maintaining system logs; and generating performance plots.

These common payload functions are covered in greater detail in Tables 2.1a through 2.1ℓ.

TABLE 2.1a. COMMON* PAYLOAD OPERATION CONTROL FUNCTIONS - DP OPERATING SYSTEM

- EXECUTIVE CONTROL
- TASK SCHEDULING
- PROCESS INITIALIZATION/TERMINATION
- INTERRUPT HANDLING
- TASK PRIORITY SELECTION/ASSIGNMENT
- MONITOR/COORDINATE PERIPHERAL I/O
- ERROR PROCESSING AND RECOVERY
- DATA RECORDING AND LOGGING
- DATA BASE MANAGEMENT EXECUTIVE
- BACKGROUND/FOREGROUND PROCESSING CAPABILITY
- DP SUBSYSTEM STATUS MONITORING
- OPERATING SYSTEM SECURITY

*COMMON MEANS COMMON TO ALL PAYLOADS REGARDLESS OF CLASS.

TABLE 2.1b. COMMON* PAYLOAD OPERATION CONTROL FUNCTIONS - COMMUNICATION PROCESSING

- MONITOR COMMUNICATION INTERFACES
  - MONITOR GROUND/PAYLOAD COMMUNICATIONS
  - MONITOR ALL USER INTERFACES
  - MONITOR COMMUNICATION WITH ALL POCC'S AND FLIGHT CONTROL CENTERS
- MAINTAIN COMMUNICATION LINE INTEGRITY
  - MAINTAIN COMMUNICATION PROTOCOL
  - HANDSHAKING
  - MONITOR TRANSMISSION ERRORS
  - REQUEST/INITIATE RETRANSMISSIONS
  - LOG COMMUNICATION DATA
- PREPROCESS COMMUNICATION DATA
  - VALIDATE/DECODE INPUT DATA
  - FORMAT/COMPRESS OUTPUT DATA
  - MULTIPLEXING AND DEMULTIPLEXING
  - STRIP PAYLOAD DATA
  - ROUTE FOR RECORDING AND PLAYBACK
- TEST ALL COMMUNICATION LINES
- PROVIDE CAPABILITY FOR
  - CONFIGURATION CHANGES
  - PROTOCOL MODIFICATION

*COMMON MEANS COMMON TO ALL PAYLOADS REGARDLESS OF CLASS.

TABLE 2.1c. COMMON* PAYLOAD OPERATION CONTROL FUNCTIONS - DATA BASE MANAGEMENT

- FILE DEFINITION AND CREATION
- FILE DIRECTORY PROCESSING
- FILE ADDRESSING/SEARCHING
- DATA STORAGE AND RETRIEVAL
- MAINTAIN DATA BASE INTEGRITY AND SECURITY
- LOG DATA BASE ACTIVITY
- SUPPORT DISTRIBUTIVE/CENTRALIZED DATA BASE
- MULTIPLE USER ACCESS
- ON-LINE AND BATCH DATA BASE PROCESSING
- SUPPORT AUTOMATED OFF-LINE DATA PRINTOUT
- COMMON DATA BASE CONTENT
    - PAYLOAD OPERATION/ENGINEERING DATA
    - PAYLOAD EXPERIMENT DATA
    - PAYLOAD TELEMETRY DATA
    - MISSION/FLIGHT PLANS
    - PAYLOAD COMMANDS
    - SYSTEM, PAYLOAD AND EXPERIMENT STATUS INFORMATION

*COMMON MEANS COMMON TO ALL PAYLOADS REGARDLESS OF CLASS.

TABLE 2.1d. COMMON* PAYLOAD OPERATION CONTROL FUNCTIONS - MAN-MACHINE INTERFACE

- OPERATOR COMMAND PROCESSING
  - ACCEPT AND VALIDATE OPERATOR COMMANDS
  - PREPROCESS AND EDIT OPERATOR MESSAGES
  - FORMAT OPERATOR COMMANDS
  - LOG OPERATOR COMMANDS
- DISPLAY GENERATION
  - DISPLAY FORMATTING
  - REAL TIME DISPLAY GENERATION
    - TELEMETRY DATA
    - SYSTEM STATUS
    - TABULAR DATA
  - BACKGROUND DISPLAY GENERATION
  - ALARM GENERATION
  - SELECTIVE DISPLAY UPDATE/ERASE
  - DISPLAY MONITORING
- MONITORING OF ALL MAN-MACHINE INTERACTIONS

*COMMON MEANS COMMON TO ALL PAYLOADS REGARDLESS OF CLASS.

TABLE 2.1e. COMMON* PAYLOAD OPERATION CONTROL FUNCTIONS - SIMULATION AND TRAINING

- ON-LINE SIMULATION FOR:
  - SYSTEM EXERCISING
  - PERSONNEL TRAINING
  - OPERATIONAL PROCEDURE VERIFICATION
  - MISSION/FLIGHT PLANS VALIDATION
- OFF-LINE SIMULATION TO DEBUG OPERATIONAL SOFTWARE
- SIMULATE OPERATIONALLY CRITICAL PAYLOAD SUBSYSTEMS
- SIMULATE MALFUNCTIONS AND ANOMALIES
- SIMULATE EXTERNAL INTERFACES
- SIMULATE STANDARD ENGINEERING AND SCIENTIFIC SUBSYSTEM MODELS
- SIMULATE PAYLOAD MISSION/FLIGHT PLANS

*COMMON MEANS COMMON TO ALL PAYLOADS REGARDLESS OF CLASS.

TABLE 2.1f. COMMON* PAYLOAD OPERATION CONTROL FUNCTIONS - TESTING AND CHECKOUT

- STANDARD TESTING OF SYSTEM OPERATION, PROCEDURES AND SUBSYSTEMS
    - TEST ALL COMMUNICATION INTERFACES
    - ENGINEERING SUBSYSTEMS
    - SCIENTIFIC EQUIPMENT
- REAL-TIME AUTOMATIC/MANUAL PAYLOAD CHECKOUT
- TEST DATA ANALYSIS
- MONITOR AND LOG TEST FAILURES
- PAYLOAD OPERATIONAL READINESS VERIFICATION
- GENERATION OF STANDARD TEST COMMANDS

*COMMON MEANS COMMON TO ALL PAYLOADS REGARDLESS OF CLASS.

TABLE 2.1g. COMMON* PAYLOAD OPERATION CONTROL FUNCTIONS - MISSION PLANNING/FLIGHT PLANNING

- USER/EXPERIMENT REQUIREMENTS ANALYSIS
- ANALYSIS OF EXTERNAL RESOURCE AND PLANNED SUPPORT
- TECHNICAL EVALUATION OF SPACECRAFT/PAYLOAD SYSTEMS
- OFF-LINE GENERATION OF:
    - PAYLOAD/EXPERIMENT OPERATIONS PLANS AND SCHEDULING
    - CONTINGENCY PLANS
    - MISSION OR FLIGHT/COMMAND TIMELINE, SEQUENCE AND PROFILES
    - SIMULATION MODELS
    - PERFORMANCE CRITERIA
    - ENERGY CONSUMPTION PROFILES
- ANALYSIS OF FUNCTIONAL SIMULATOR RESULTS
- ON-LINE REAL-TIME UPDATE OF PAYLOAD/EXPERIMENT PLANS
- OPERATIONAL PROCEDURE DEVELOPMENT

*COMMON MEANS COMMON TO ALL PAYLOADS REGARDLESS OF CLASS.

TABLE 2.1h. COMMON* PAYLOAD OPERATION CONTROL FUNCTIONS - FLIGHT SUPPORT

- MONITOR SUPPORT SPACECRAFT/PAYLOAD DURING ORBITER FLIGHT
- ORBITER FLIGHT DATA MONITORING AND QUICK-LOOK ANALYSIS
- SUPPORT TRACKING DATA ANALYSIS AND ORBIT DETERMINATION
    - QUICK-LOOK ANALYSIS OF TRACK DATA
- SUPPORT ATTITUDE DATA PROCESSING
    - PREPROCESS ATTITUDE SENSOR DATA
    - MONITOR RAW ATTITUDE DATA QUALITY
    - MONITOR/EVALUATE POC ATTITUDE PREDICTIONS
- SUPPORT FLIGHT MANEUVER DATA PROCESSING
    - MONITOR/EVALUATE POC PROCESSED FLIGHT MANEUVER DATA
- SUPPORT PAYLOAD EPHEMERIS DATA PROCESSING
    - MONITOR/EVALUATE POC PROCESSED EPHEMERIS DATA
- MONITOR PAYLOAD DEPLOYMENT
- MONITOR ORBITER/PAYLOAD HANDOVERS

*COMMON MEANS COMMON TO ALL PAYLOADS REGARDLESS OF CLASS.

TABLE 2.1i. COMMON* PAYLOAD OPERATION CONTROL FUNCTIONS - PAYLOAD OPERATION AND CONTROL.

- PAYLOAD CONTROL
  - REAL-TIME CONTROL OF PAYLOAD OPERATIONS DURING ALL PHASES
  - EXECUTE/COORDINATE PLANNED PAYLOAD OPERATION SEQUENCE
  - INITIATE CONTINGENCY PLANS FOR EMERGENCY SITUATIONS
  - GO/NO-GO DECISION FOR CONTINUING MISSION/FLIGHT
  - PAYLOAD ACTIVATION/RECONFIGURATION/DEACTIVATION
  - STIMULATE PAYLOAD COMMANDS
  - CONSUMABLES ANALYSIS
- PAYLOAD ENGINEERING ANALYSIS
  - VERIFY PAYLOAD DATA
    - VERIFY PAYLOAD EPHEMERIS AND ORIENTATION
    - VERIFY PAYLOAD ALIGNMENT MECHANISM
    - VERIFY PAYLOAD MANEUVER REQUIREMENTS
  - MONITOR CONSUMABLES
  - MONITOR PAYLOAD PYROTECHNICS FOR NON-ARMED CONDITION
  - ANALYZE, SET-UP AND CALIBRATE PAYLOAD SUBSYSTEMS
  - VERIFY GROUND SYSTEM PERFORMANCE
- PAYLOAD GUIDANCE
- PAYLOAD STATUS MONITORING
  - MONITOR CRITICAL PAYLOAD FUNCTIONS
  - MONITOR PAYLOAD FUNCTIONAL AND OPERATIONAL STATUS
  - ANALYZE AND ISOLATE PAYLOAD FAULTS AND ANOMALIES
  - CHECKOUT PAYLOAD EQUIPMENT
  - MAINTAIN ENGINEERING AND OPERATION RECORDS
  - MONITOR PAYLOAD DEPLOYMENT

*COMMON MEANS COMMON TO ALL PAYLOADS REGARDLESS OF CLASS.

TABLE 2.1j. COMMON* PAYLOAD OPERATION CONTROL FUNCTIONS - PAYLOAD COMMAND PROCESSING

- MONITOR PAYLOAD COMMAND SEQUENCE
- MAINTAIN COMMAND LOG AND COMMAND MASTER DATA RECORD
- COMMAND GENERATION
  - PREPARE COMMAND SEQUENCE
  - COMMAND ENCODING AND FORMATTING
  - COMMAND VERIFICATION
  - INITIATE COMMAND TRANSMISSION
- COMMON PAYLOAD COMMANDS
  - PAYLOAD FLIGHT SUPPORT COMMANDS
  - STANDARD PAYLOAD OPERATION AND CONTROL COMMANDS
  - STANDARD EXPERIMENT RELATED COMMANDS
  - PAYLOAD STATUS MONITORING COMMANDS

*COMMON MEANS COMMON TO ALL PAYLOADS REGARDLESS OF CLASS.

TABLE 2.1k. COMMON* PAYLOAD OPERATION CONTROL FUNCTIONS - TELEMETRY DATA PROCESSING

- MONITOR PAYLOAD TELEMETRY

- PREPROCESS TELEMETRY DATA
  - ACCEPT AND VALIDATE DATA
  - REFORMAT DATA
  - DECOMMUTATE DATA
  - PERFORM REDUNDANCY CHECKS
  - DETECT FRAME SYNC PATTERN

- RECORD AND LOG TELEMETRY DATA

- SUPPORT PAYLOAD EPHEMERIS DATA PROCESSING
  - PROCESS EPHEMERIS DATA
  - VERIFY SATISFACTORY PAYLOAD EPHEMERIS AND ORIENTATION

*COMMON MEANS COMMON TO ALL PAYLOADS REGARDLESS OF CLASS.

TABLE 2.1ℓ. COMMON* PAYLOAD OPERATION CONTROL FUNCTIONS - EXPERIMENT OPERATION AND CONTROL.

EXPERIMENT MONITOR AND CONTROL

- MONITOR SCIENTIFIC INSTRUMENTS PARAMETERS
- EXECUTE/COORDINATE PLANNED EXPERIMENT SEQUENCE
- EVALUATE/COORDINATE USER EXPERIMENT REQUIREMENTS
- SET-UP AND CALIBRATE SCIENTIFIC INSTRUMENTS
- ACTIVATE/DEACTIVATE SCIENTIFIC INSTRUMENTS
- COORDINATE EXPERIMENT SEQUENCE WITH USER

- EXPERIMENT DATA ANALYSIS
  - EVALUATE POC PROCESSED EXPERIMENT DATA
  - MONITOR RAW EXPERIMENT DATA QUALITY
  - PREPROCESS EXPERIMENT DATA FOR USER QUICK-LOOK

- EXPERIMENT STATUS MONITORING
  - ANALYZE OUT-OF-TOLERANCE SUBSYSTEMS
  - MONITOR/EVALUATE EXPERIMENT PERFORMANCE
  - MAINTAIN EXPERIMENT STATUS LOGS

*COMMON MEANS COMMON TO ALL PAYLOADS, REGARDLESS OF CLASS.

2.1.2.2.1.2 Unique POCC Functions

Unique POCC functions with respect to each payload class were identified and grouped into similar subsets. An analysis of these subsets for any one of the payload classes shows that a unique function belongs to one of the following groupings:

a. Mission Planning

b. Flight Support

c. Payload Operation and Control

d. Experiment Operation and Control

Moreover, each such unique function was highly dependent on the payload type and the nature of the experiment.

Unique functions for each of the three payload classes are listed in Tables 2.1m through 2.1q.

2.1.2.2.2 Summary of Functional Standardization

From the foregoing analysis, we can make the following assumptions

a. All POCC's designed to handle one class of payload can be highly standardized with only a limited set of unique functions strictly dependent on payload control and scientific experiment.

b. It is possible to design POCC's capable of handling two or more payload classes. The extent of unique functions is, however, higher than for (a) because of the greater extent of uniqueness introduced by the basic differences between payload classes. For example, planetary payloads and experiments are quite different from Spacelab or Automated Earth Orbiting Payloads.

TABLE 2.1m. GSFC UNIQUE PAYLOAD OPERATION CONTROL FUNCTIONS

- EOS DELIVERY
  - COMPLETE PAYLOAD CHECKOUT FOLLOWING SEPARATION FROM ORBITER
  - COMMAND PAYLOAD TO THE SELF-BOOST CONFIGURATION FOR ORBIT TRANSFER INITIATION
  - INITIATE PAYLOAD ASCENT MANEUVER

- HEAO RETRIEVAL
  - COMMAND PAYLOAD TO NORMAL OPERATION
  - PLAN REACTIVATION OF ATTITUDE CONTROL AND DETERMINATION SUBSYSTEM (ACDS)
  - REACTIVATE ACDS FOR ORBITER RETRIEVAL
  - *PLAN AND SUPPORT ORBITER RENDEZVOUS FUNCTIONS
  - *VERIFY/MONITOR PAYLOAD SAFETY AND CONTAMINATION STATUS
  - *DETERMINE EPHEMERIS CORRECTION NEEDED FOR RENDEZVOUS
  - *DEFINE AND INPUT CORRECTIVE MANEUVERS AND ASSOCIATED COMMANDS FOR PAYLOAD AND ORBITER
  - *MONITOR DOCKING MANEUVERS
  - *VERIFY PAYLOAD OPERATIONAL STATUS PRIOR TO RETRIEVAL
  - *MONITOR PAYLOAD/ORIBTER CONFLICTS DURING REENTRY
  - *INITIATE AND VERIFY PAYLOAD DEACTIVATION DURING DESCENT
  - *TRANSMIT SPECIAL HANDLING INFORMATION ON PAYLOAD TO LANDING SITE

*THESE FUNCTIONS ARE UNIQUE TO THE PAYLOAD SERVICE/RETRIEVAL OPERATION, NOT TO THE PAYLOAD

TABLE 2.1m. GSFC UNIQUE PAYLOAD OPERATION CONTROL FUNCTIONS (CONTINUED)

- EOS SERVICE
  - *COMMAND PAYLOAD TRANSFER TO ORBITER ORBIT
  - *PERFORM ALL PAYLOAD/ORBITER RENDEZVOUS AND DOCKING FUNCTIONS SIMILAR TO HEAO
  - INITIATE/MONITOR PAYLOAD MODULE EXCHANGE OPERATION/MECHANISM
  - *DETERMINE REPAIRS, REPLACEMENTS, CHANGES, ADJUSTMENTS AND REPLENISHMENTS REQUIRED FOR PAYLOAD
  - *PLAN SERVICING PROCEDURE
  - *MONITOR NEW INSTALLED EQUIPMENT
  - *PERFORM PAYLOAD PRE-DEPLOYMENT CHECKOUT
  - *PERFORM ALL PAYLOAD DEPLOYMENT FUNCTIONS SIMILAR TO EOS DELIVERY
- ST DELIVERY
  - **FUNCTIONS SIMILAR TO EOS DELIVERY

* THESE FUNCTIONS ARE UNIQUE TO THE PAYLOAD SERVICE/RETRIEVAL OPERATION, NOT TO THE PAYLOAD.

** THESE FUNCTIONS ARE UNIQUE TO THE DELIVERY/SERVICE OPERATION, NOT TO THE PAYLOAD.

TABLE 2.1m. GSFC UNIQUE PAYLOAD OPERATION CONTROL FUNCTIONS (CONTINUED)

ST SERVICE

- **FUNCTIONS SIMILAR TO EOS SERVICE
- **VERIFY PAYLOAD PLACED ON EXTERNAL POWER DURING PAYLOAD RETRIEVAL
- **PLACE PAYLOAD ON INTERNAL POWER UPON COMPLETION OF SERVICE
- DURING PAYLOAD DEPLOYMENT, ORIENT PAYLOAD FOR MAXIMUM SOLAR POWER AND DEPLOY SOLAR ARRAYS AND TDRS ANTENNAS
- **PERFORM PAYLOAD POST-DEPLOYMENT CHECKOUT

FFTO

- MONITOR/CONTROL FFTO MANEUVERS
- MONITOR/CONTROL FFTO RENDEZVOUS PROCEDURE

** THESE FUNCTIONS ARE UNIQUE TO THE DELIVERY/SERVICE OPERATION, NOT TO THE PAYLOAD

TABLE 2.1n. GSFC EXPERIMENT DEPENDENT UNIQUE FUNCTIONS

- EOS DELIVERY
  - UNCAGE/RECAGE TELEMETRY SCANNER
  - INITIATE REMOVAL OF PROTECTIVE COVERS AND CONTAMINATION SHROUDS
  - OPERATE AND MONITOR TELEMETRY SCANNER FOR NORMAL OPERATION

TABLE 2.1o. JSC UNIQUE PAYLOAD OPERATION CONTROL FUNCTIONS

- ATL
  - ESTABLISH INITIAL PAYLOAD POINTING
  - COORDINATE SCHEDULE/LOCATION OF GROUND TRUTH DATA COLLECTION
  - MONITOR STS STATUS AND PERFORMANCE
  - ALLOCATE/MODIFY GROUND AND ONBOARD FUNCTIONS AS REQUIRED
- AMPS
  - DIRECT PAYLOAD TO PERMIT SIMULTANEOUS OBSERVATION OF EARTH AND MAGNETOSPHERE
  - ESTABLISH INITIAL PAYLOAD POINTING
  - CONTROL SUBSATELLITE OPERATIONS
- SO
  - ALIGN PAYLOAD IN AN OPTIMUM DIRECTION RELATIVE TO THE SUN
- SEOPS
  - ALLOCATE/MODIFY GROUND AND ONBOARD FUNCTIONS AS REQUIRED
- HEA
  - GROUND CONTROL OF ON-ORBIT OPERATIONS

TABLE 2.2p. JSC EXPERIMENT DEPENDENT UNIQUE FUNCTIONS

- ATL
  - CALCULATE EPHEMERIDES OF CELESTIAL BODIES FOR TELESCOPE SIGHTING
  - CALCULATE POINTING ANGLES FOR EARTH LOOKING INSTRUMENTS
  - MAINTAIN TEMPERATURE OF BIOLOGICAL REFRIGERATOR
  - PROVIDE TARGET SELECTION, TIMING AND POINTING ANGLES
  - MONITOR TESTS FOR COLONY GROWTH EXPERIMENTS
  - DEPLOY/RETRACT BOOM
  - MONITOR ENVIRONMENTAL EFFECTS EXPERIMENT DATA
  - VERIFY LIDAR MEASUREMENTS
  - MONITOR UV METEOR SPECTROSCOPY DATA
  - IN GENERAL, PERFORM REPETITIVE EXPERIMENT SET-UP, OPERATION, SHUTDOWN AND DATA EVALUATION
- AMPS
  - ANALYZE PERIODICALLY COLLECTED DATA
  - COORDINATE GROUND BASED ANALYSIS WITH ELECTRON AND CHEMICAL INJECTION EVENTS
  - MONITOR TELESCOPE POINTING
  - EVALUATE TARGET POINTING DATA
  - MONITOR FILM USAGE
  - VERIFY GAIN SETTING AND EXPOSURE TIME
  - DEPLOY/RETRACT BOOM
  - MONITOR SUBSATELLITE OPERATIONS

TABLE 2.1p. JSC EXPERIMENT DEPENDENT UNIQUE FUNCTIONS (CONTINUED)

SO

- MONITOR ANTENNA POINTING
- PROVIDE TARGET POINTING AND TIMING DATA
- COLLECT TARGET GROUND TRUTH DATA
- COORDINATE GROUND TARGET ACTIVATION
- MONITOR TERRESTRIAL WEATHER DATA

- CONTROL/MONITOR MAGNETIC SPECTROMETER

LS

- ASSESS AND RECORD EXPERIMENT DATA IN REAL TIME

TABLE 2.1q. JPL UNIQUE PAYLOAD OPERATION CONTROL FUNCTIONS

- MARINER
  - CALCULATE TARGET-PLANET EMPHEMERIDES FOR USE IN SPACECRAFT TRAJECTORY
  - CALCULATE AND ACTIVATE MID-COURSE CORRECTIONS
  - ACTIVATE/VERIFY PAYLOAD ELECTRICAL POWER SYSTEM
  - *PERFORM QUICK-LOOK CHECK OF IUS/PAYLOAD
  - *MONITOR IUS/PAYLOAD DEPLOYMENT AND VERIFY SATISFACTORY DEPLOYMENT
  - COMMAND PAYLOAD TO SAFE-BOOST CONFIGURATION FOR TRANSFER ORBIT
  - REMOVE PROTECTIVE COVERS AND CONTAMINATION SHROUDS
  - VERIFY IUS/PAYLOAD GO/NO-GO FOR INJECTION
  - VERIFY MARINER INJECTION SEQUENCE
  - ARM PAYLOAD PYROTECHNICS AND PRESSURIZE PROPULSION
  - ENABLE PAYLOAD PROPULSION MODULE
  - AT ENCOUNTER, CONTINUOUS REAL-TIME MONITORING AND PREPROCESSING OF SCIENTIFIC AND ENGINEERING DATA
  - TRANSMIT CORRECTIVE INPUTS TO ENGINEERING AND SCIENCE INSTRUMENTS
  - FOLLOWING TARGET ENCOUNTER PREPARE AND TRANSMIT DAILY FLIGHT ACTIVITY SEQUENCE
  - *MONITOR IUS/PAYLOAD FLIGHT CONTROL ACTIVITY

- PIONEER
  - *MONITOR TUG/PAYLOAD FLIGHT CONTROL ACTIVITY

* THESE FUNCTIONS ARE UNIQUE TO THE IUS/TUG OR SSUS OPERATION, NOT TO THE PAYLOAD

c. The optimum POCC will functionally consist of the set of common functions augmented by a set of unique required functions depending on payload class and experiment. The set of common functions are self-sufficient in the sense that they include all essential functions to coordinate, execute and monitor all standard data processing, C^3 and system support functions; they also include basic payload operation and control as well as standard experiment control functions.

From these results, we can introduce the concept of the Standard POCC (SPOCC) with its standard functional model. Figure 2.1-3 is a functional block diagram of a SPOCC showing:

- All common functions
- Functional areas where unique functions could be added
- Main interfaces
- Top level data flow.

Such a POCC model could be used at JSC, GSFC or JPL with the only difference being the extent of additional unique functions. A SPOCC could be made to handle any two or even all three classes of payloads.

It is also possible to conceptualize the idea of a fully standard POCC where software and hardware capabilities exist to handle any class of payload. Functionally, this POCC would have a standard resident set of all the identified common functions while the specific set of unique functions would be added as required to permit total POCC reconfiguration from one payload class to another.

The idea of full functional standardization allowing a POCC the capability to handle any payload is not considered practical due to high cost and inefficiency. Furthermore, the study guidelines dictate the following:

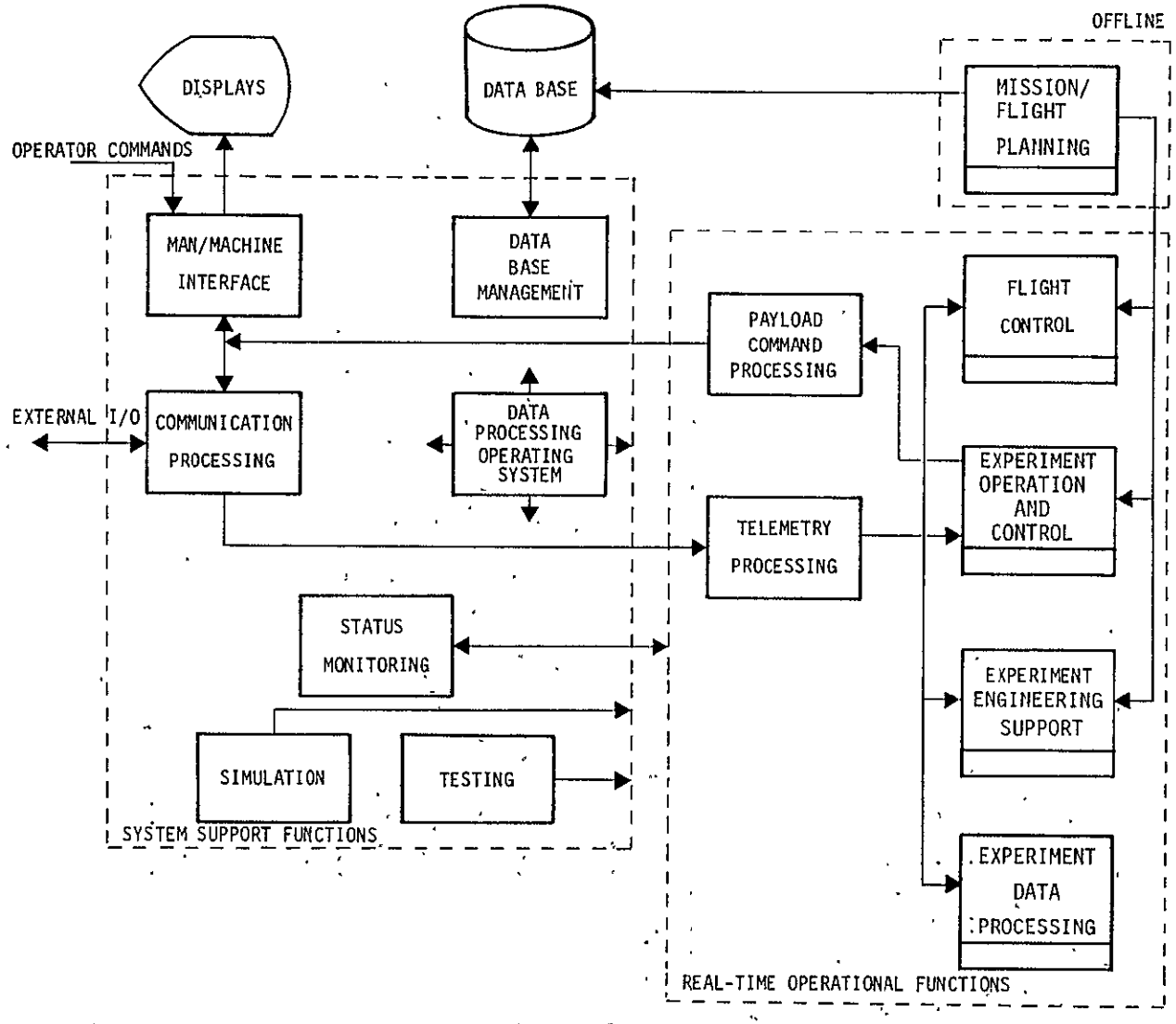

Figure 2.1-3. Standard POCC Functional Block Diagram

a. JSC POCC's initially handle Spacelab Payloads with future expansion to Automated Earth Orbit Payload activity.

b. GSFC POCC's initially handle Automated Earth Orbit Payloads with possible future expansion to Spacelab Payload activity.

c. JPL is exclusively assigned for Planetary Payloads. However, expansion to a capability to handle Spacelab and Automated Earth Orbit payloads on a backup basis is feasible.

Therefore, it is safe to assume that both JSC and GSFC should be given the capability of fully handling their primary payloads with additional capability (backup or degraded as a minimum) to handle their secondary payloads. As for JPL, planetary payloads should normally be the only objective. An examination of the YARDLEY Modified Payload Traffic Model shows the high number of planned Spacelab and Automated Earth Orbiting Payloads compared to Planetary Payloads suggesting possible overload conditions for JSC and GSFC and the possible requirement of using JPL as a backup even to a limited extent, common functions only for example.

Cost considerations emphasize the need for limited standardization using the concept of the Standard POCC as illustrated by the simplified activity matrix on Figure 2.1-4. For both JSC and GSFC, full backup capability is provided. In case of overload or even complete failure, automatic switch-over, transparent to the operator allows the POCC of one Center to use totally or even partially software and hardware subsystems residing at a POCC of the other Center. JPL can only provide limited backup capability to both GSFC and JSC (common functions only) and there are no plans to provide backup of Planetary POCC's for JPL. Note that full backup capability is proposed between POCC's of the same Center.

Figure 2.1-5 compares schematically the functional characteristics of the three primary POCC's in terms of totally dedicated, full standardization and limited standardization. The latter approach is the most optimum since it is less expensive than the former two and yet provides the desirable primary and backup capabilities.

LOCATIONS \ FLIGHT TYPES	SPACELAB	AUTOMATED EARTH ORBITING	PLANETARY
JSC POCC's	PRIMARY	FULL BACKUP	-------
GSFC POCC's	FULL BACKUP	PRIMARY	-------
JPL POCC'S	LIMITED BACKUP	LIMITED BACKUP	PRIMARY

NOTE: FULL BACKUP CAPABILITY IS ALSO PROVIDED AMONG POCC'S AT THE SAME CENTER

Figure 2.1-4. Limited Standardization with Backup Capability

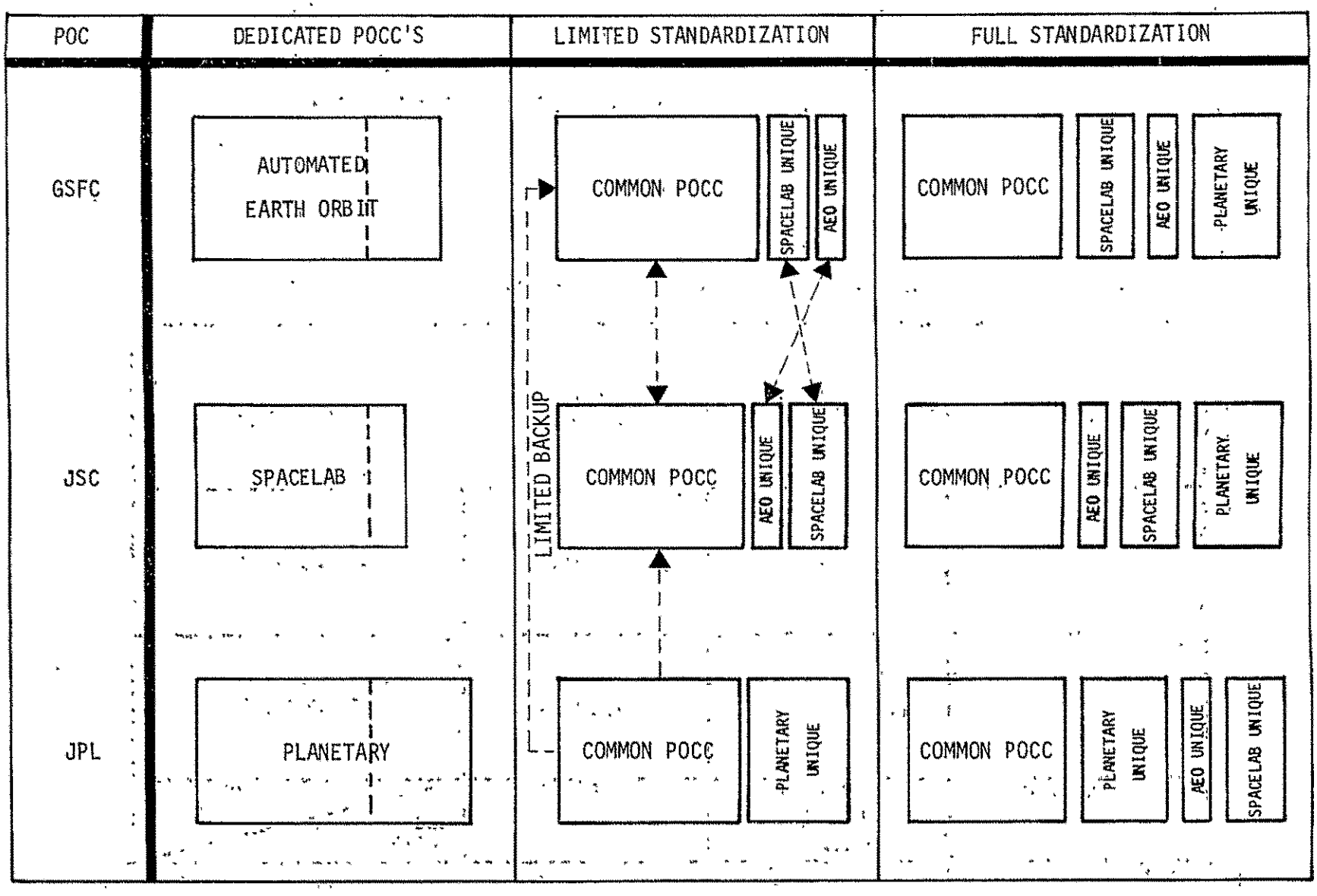

Figure 2.1-5. POCC Standardization Alternatives

The common POCC, which includes all common and standard support functions, is the same for all three POCC types. With adequate communication, it would be easy to reconfigure a Center to make full use of the common POCC of another. Automated Earth Orbit (AEO) and Spacelab unique functions are made available to both JSC and GSFC. Each primary set of unique functions is resident in its respective primary POCC; the other set of unique functions can be made available, upon request, through hardware reconfiguration and software loading (for both GSFC and JSC POCC's, this means that the available manpower should be familiar with both Spacelab and AEO Operational procedures). Planetary unique functions are exclusively allocated to JPL.

The concept of functional standardization is also applicable to remote portable POCC's allowing other NASA Centers or User Facilities to operate as on-line secondary payload control centers. Remote portable POCC's are specially suited to handle overloads from these Centers.

Functional standardization allows a POCC to standardize its processing hardware. Since a large percentage of POCC functions are common to all classes of payloads, the baseline hardware can also be assumed standard. The standard POCC hardware should have enough spare capability (CPU memory size, processing power, mass storage, peripherals) to accommodate all the required unique functions. A distributed architecture is recommended for the standard POCC with all functions allocated to an array of miniprocessors. Figure 2.1-6 depicts a typical standard POCC architecture; functions allocated to each processor are clearly indicated; the diagram also shows all external interfaces, required peripherals and the estimated processing power of each mini in terms of instructions per second.

Standardization can also be extended to software packages. Standard software routines common to all POCC's are assumed resident in main memory, while unique software packages are stored in mass storage and loaded to main memory when required by the data processing operating system. Standard methods could be devised to design, develop and maintain this software with a standard set of diagnostic routines for checking and validation.

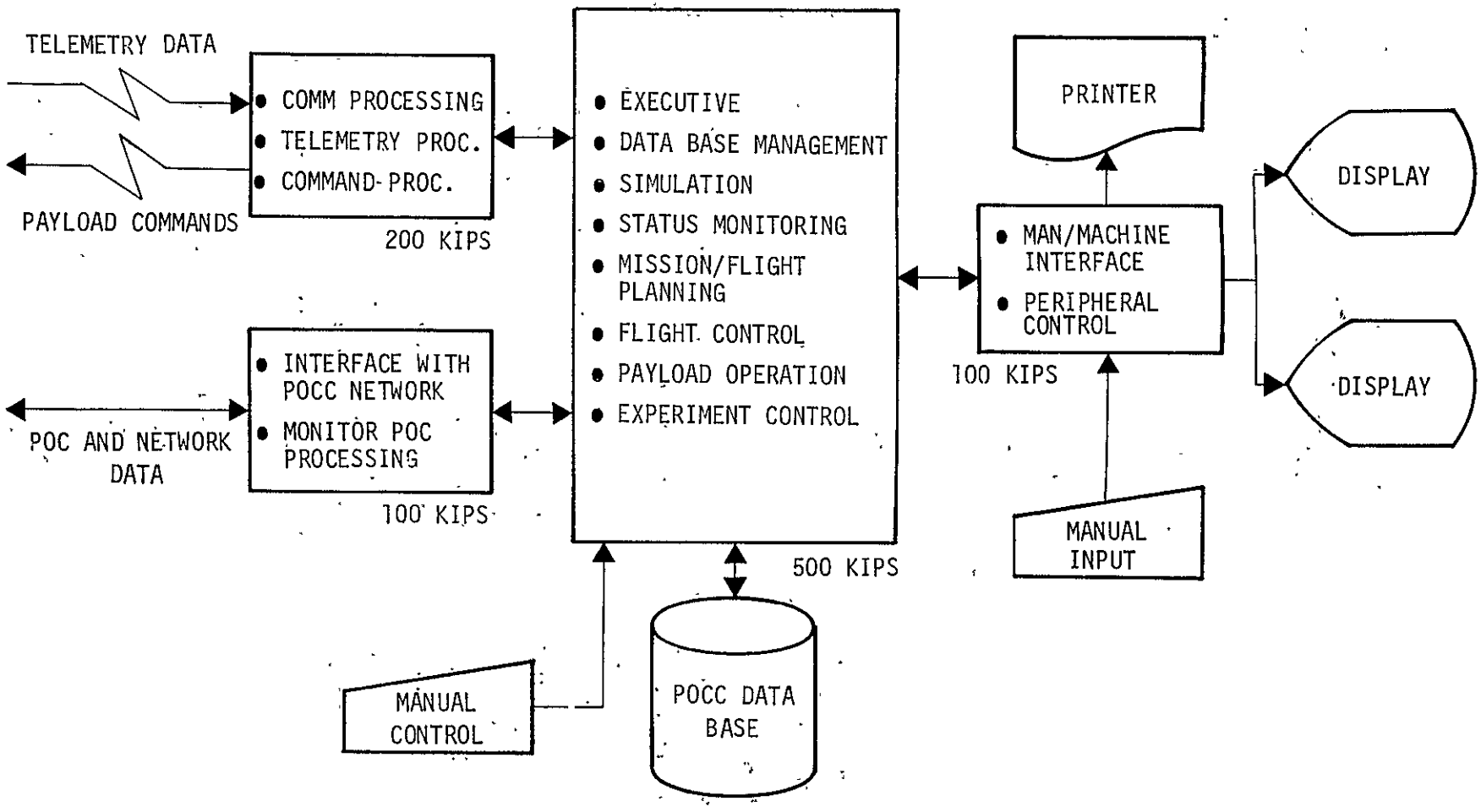

Figure 2.1-6. Standard POCC Hardware Architecture

2.1.2.2.3 Advantages of Functional Standardization

Compared to totally dedicated, specially designed and developed POCC's to handle unique experiments, standardization offers an alternative in line with the basic characteristic of the Space Shuttle era, namely, reuseability at a minimal additional cost. Initial costs required in the design and development of the Standard POCC need not be higher than the aggregate of the various Centers' costs to upgrade their POCC equipment and software in accordance with the changing technology. Furthermore, overall life cycle costs should be greatly reduced. Table 2.1r lists advantages and disadvantages of standardization. Cost savings is by far the greatest advantage.

2.1.2.2.4 Standard POCC (SPOCC) Network

The SPOCC concept is recommended as the basis for a cost effective NASA-wide network of Payload Operation Control Centers configured to handle the maximum traffic loads to be experienced in the STS era. The three basic centers, namely JSC, GSFC and JPL, are each used for the primary control of their class of payloads. Each Payload Operations Center (POC), communicates with a number of SPOCC's each capable of handling any assigned STS payload during the joint operation and selected ones capable of handling free flyer operations. All SPOCC's are on-line with the corresponding POC. All three Centers communicate with each other directly. The Integrated Operations Manager (IOM) becomes involved when necessary to resolve conflicts or make decisions affecting more than one Center. JSC and GSFC SPOCC's can be reconfigured to handle either Spacelab or AEO payloads, while JPL SPOCC's are exclusively limited to Planetary. Any SPOCC of a Center can use any one of the others as a backup through direct communication; any JSC SPOCC can provide full backup capability for a GSFC SPOCC and vice versa; any JPL SPOCC can provide limited backup for either a JSC or GSFC SPOCC. A SPOCC may simultaneously support the combined STS operation of a Spacelab or AEO payload and a free flyer operation which is independent of the STS. Each SPOCC has its own local data base which is independent of the Center's data base. Individual SPOCC data is made available to any other SPOCC in the network through direct communication via the IOM.

TABLE 2.1r. ADVANTAGES/DISADVANTAGES OF POCC STANDARDIZATION

ADVANTAGES	DISADVANTAGES
• LOWER OVERALL COST • HARDWARE AND SOFTWARE MULTI-APPLICATION • ESTABLISHES STANDARD REQUIREMENTS FOR ALL POCC'S • REDUCED MANPOWER AND TRAINING REQUIREMENTS • MODULARITY • EXPANDABILITY • UNIFORM OPERATIONAL PROCEDURES • MULTI-PAYLOAD HANDLING CAPABILITY • IMPROVED AVAILABILITY • UNIFORMITY IN POCC DESIGN AND DEVELOPMENT • IMPROVED EFFICIENCY OF OPERATION	• NECESSITY FOR DEVELOPMENT AND VALIDATION OF DESIGN CONCEPT • REQUIRED USER COMPLIANCE • MORE INVOLVED DATA BASE MANAGEMENT • HIGHER MANPOWER VERSATILITY REQUIRED • INCREASED COMMUNICATION REQUIREMENTS

The Integrated Operations Manager (IOM) data base keeps track of the interaction between SPOCC's of different Centers and keeps a record of all interface data.

Figure 2.1-7 describes the baseline NASA network of Standard POCC's. In addition to the prime Centers and their SPOCC's, the figure shows the main external interfaces. STDN, TDRSS and DSN are placed under a common Network Operation Control Center (NOCC) whose function is to perform all support functions of tracking and data acquisition resources by a single responsible authority. The MCC is directly connected to the IOM, the NOCC and the KSC/VAFB. Standard remote portable SPOCC's are allowed to operate with each host POC via DOMSAT links. All POCC's of a Center can communicate directly with each other under control of the POC. POCC's of different Centers are allowed to communicate under control of NASCOM operations.

The concepts of limited SPOCC standardization and limited backup capability within the SPOCC system offer an optimum low cost system that permits efficient pooling of resources and eliminates unnecessary redundancies. Although using a standard configuration, each Center's SPOCC is allowed to retain its primary payload characteristics with an option for reconfiguration to a secondary mission when required. Standardization at a system level allows for low cost software and hardware maintenance, reduces manpower training time and simplifies command, control and communication requirements.

2.1.2.3 Implementation Activity Network

This section will outline the implementation plans recommended for achieving the NASA-wide system of standard STS/Payload POCC's. The concept of Standard POCC (SPOCC) described in Section 2.1.2.2 will be the basis for the proposed approach.

2.1.2.3.1 System Characteristics

The major system features with respect to standardization are:

a. Limited standardization is recommended where each of the three primary NASA Centers are primarily responsible in handling their own payloads, namely:

FOLDOUT FRAME 1

FOLDOUT FRAME 2

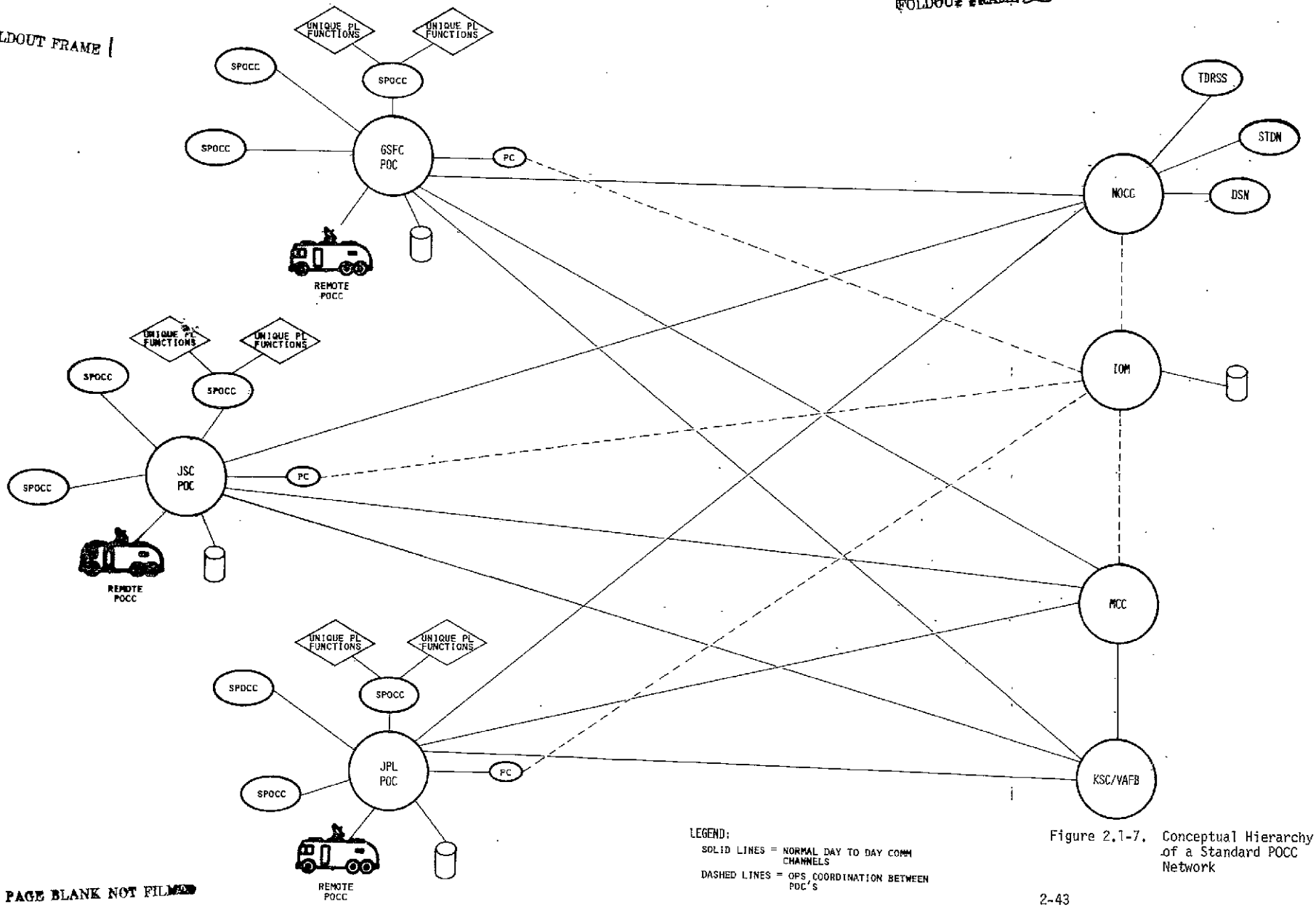

Figure 2.1-7. Conceptual Hierarchy of a Standard POCC Network

PRECEDING PAGE BLANK NOT FILMED

1. JSC has primary responsibility for Spacelab payloads.
2. GSFC has primary responsibility for AEO payloads.
3. JPL has primary responsibility for Planetary payloads.

In addition, it is recommended that provisions be made for GSFC to provide full backup capability for Spacelab payloads, and JSC to provide full backup capability for AEO payloads. Under this plan, JPL could only provide limited backup capability for both GSFC and JSC. No backup is recommended at other Centers for JPL payloads.

b. Except for a set of unique POCC functions depending exclusively on payload operation and experiment control, all remaining functional requirements are found to be common to all POCC's. This functional commonality is the basis for POCC software and eventual hardware standardization.

c. The Standard POCC network depicted in Figure 2.1-7 provides the baseline configuration. Necessary communication is provided to allow full backup capability between SPOCC's of the same Center and limited backup capability, as described previously, between SPOCC's of different Centers. A common Network Operation Control Center is recommended to handle all data. Each Center utilizes a payload coordinator (PC) and the Integrated Operations Manager controls the interface between Centers. The remote portable Standard POCC allows a remote user to communicate with the system and conduct experiments at his facility.

2.1.2.3.2 Drivers for System Implementation

The major drivers for system implementation are:

a. Cost is the major driver and dictates the pace of system evolution. A cost-effective approach to standardization requires that the change-over of each system element to a standard implementation occurs at the time nominally planned for modernizing or expanding existing equipment, software and procedures.

b. Existing long-range plans of each participating Center will influence the time table for making system changes. The various Centers' plans should be reviewed to determine methods of converging toward common SPOCC system architecture while at the same time enhancing the Centers' POCC capabilities at the pace required to support the increase in STS payload activity supported by each Center.

c. The Spacelab POCC's will become drivers for the standardization of design. Since Spacelab POCC's for the Mature Operational Phase of STS do not exist as such, early efforts should be devoted to ensuring that any new resources acquired for these POCC's will contribute to long-range plans for standardization of SPOCC architecture.

d. Another driver is the buildup of communications traffic. As the load builds with an increase in launch frequency and multiple overlaps of long duration operations, network enhancements to meet these requirements should support standardization of system interfaces with POCC's, including methods of interfacing remote portable POCC's.

e. As industrial applications for STS payloads are developed in number, the need for simplified standard methods of supporting a wide range of users in their own facilities will become apparent. The remote portable POCC, standard methods of interfacing various communications networks and methods of standard data processing support will be essential prior to wide acceptance of the STS system by industrial users.

f. Introduction of the Payload Coordinator (PC) function at each Center and the Integrated Operations Manager (IOM) into the Payload Command and Control hierarchy will also dictate the necessity for standard POCC architecture and procedures.

g. Imposition of standards for NASA and DOD payloads and the introduction of the Multimission Modular Spacecraft will lend further impetus to standardize the ground support resources.

2.1.2.3.3 Implementation Plan and Schedules

Figure 2.1-8 describes a summary of the development activity network with timeline and interactions between activity blocks. A brief description of the activities of each block will be given next.

2.1.2.3.3.1 1977-1978 Activities

The major thrust of the recommended POCC implementation plan is to reduce ground operating costs through an evolutionary implementation of flexible standard systems of hardware and software for POCC's to be implemented as replacements at the time of the normal equipment generation update period.

FOLDOUT FRAME 1

FOLDOUT FRAME 2

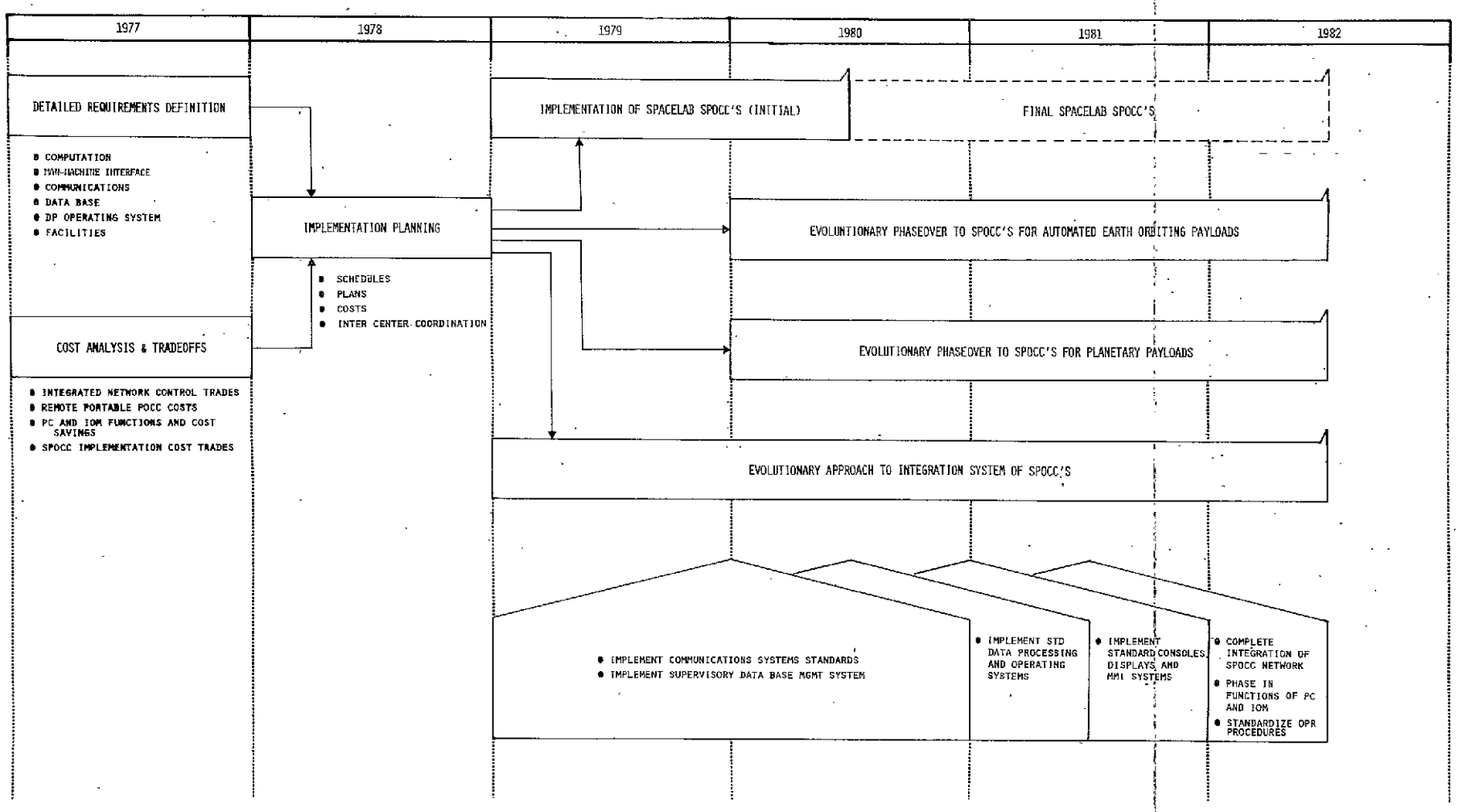

Figure 2.1-8. SPOCC System Development Activity Network

PRECEDING PAGE BLANK NOT FILMED

Over the past decade, the NASA Centers with responsibility for Payload Operations have developed sophisticated capabilities for command and control of their assigned types of payloads and, in recent years, planning at these Centers has included considerations for standardization among the POCC's employed at these Centers. This study subtask has assessed the feasibility of extending POCC standardization to include payloads of different types.

It is not feasible or cost effective to discard existing systems in the interest of standardization. What the study recommends is an evolutionary approach based on a modular system architecture which can be implemented incrementally as existing systems become obsolete or require augmentation due to increased system loads.

Two initial tasks are scheduled during this period. They are:

a. The detailed definition of requirements in terms of hardware, software and procedures based on the concepts set forth in this task.

b. The all important task of conducting cost analyses and tradeoffs to drive the implementation planning to the least cost solution and to show quantitatively the savings to be gained as a result of a standard NASA-wide system of SPOCC's.

During this timeframe, a variety of tradeoff tasks and requirements analysis tasks are performed including:

- Detailed requirements definition for computation resources, man-machine interfaces, communications system enhancements, consolidation of data base system requirements, definition of the Data Processing Operating System, facility requirements and configurations for portable POCC's.

- Cost analysis and tradeoffs include assessment of cost savings resulting from integration of network control for STDN, TDRSS, and DSN; costs of implementing a standard design for Remote Portable POCC's; cost savings resulting from implementation of the Payload Coordinator (PC) and the Integrated Operations Manager (IOM); and cost trades considering various methods and timeframes for implementing the SPOCC's.

- A change policy for users of standard portable POCC's must be defined.

Following the cost analysis and requirements definition tasks, a detailed implementation plan must be generated. In this activity, it will be necessary to review the long-range plans of each Center and integrate the individual Centers' plans into a NASA-wide master plan in order to converge toward a standard approach to POCC implementation.

As an example of this planning activity, the replacement schedule for computers, for each of the three Centers, should be coordinated such that future data processing tasks can be modularized in a standard system design with similar functions for each Center allocated to similar hardware which, in turn, should be sized for the largest requirement if Centers are to provide backup services for each other at a future date.

Implementation planning will involve detailed scheduling and activity networks required to phase-in the standard POCC's over the ensuing 3-1/2 years.

Other major considerations will include:

- System baselining and maintenance of configuration control through the evolutionary period.
- Coordination of plans between the Centers to effect economics during procurement of system elements and to ensure common design approaches where feasible.
- Detailed schedules will be developed for each Center's activities over the full time period until mid-1982. An overall system schedule will be required to coordinate the detailed Center schedules.
- Detailed planning of the PC and IOM functions will be required so that system design can reflect efficient man-machine interfaces to incorporate these functions in the design of future generation consoles, display systems and data handling systems.

2.1.2.3.3.2 Activities from 1979 through Mid-1982

As shown in Figure 2.1-8, there are several activities which proceed in parallel during this period.

Initial Spacelab POCC implementation must start in time to provide a modest capability for the early Spacelab flights. Since these POCC's do not exist except as capabilities left over from Apollo, Skylab, and Apollo-Soyuz Programs, early efforts will probably focus on methods to employ these resources for the initial support of JSC Spacelab POCC's.

As the flight rate and level of complexity of Spacelab flights start to build up beginning in about mid-1980, the development of a final architecture for Spacelab POCC's should evolve. This embraces the proper timeframe for coordination of the standard POCC design among the Centers so that the configuration of the standard POCC can evolve along practically the same timeline.

GSFC and JPL POCC's will be in a more mature stage of development than Spacelab POCC's and, therefore, should start the phase-over to standardization at an earlier date, beginning in 1980 since changes will impact them more.

At the bottom of Figure 2.1-8, are shown the time phasing for various elements of individual POCC standardization, as well as system implementation involving the networks, communications and the supervising data base management system. It will be noted that these activities overlap each other but are shown in a logical sequence.

The implementation of system communication standards, and supervisory data base management system will likely precede the standard data processing system and the Data Processing Operating System since they can function in a degraded mode until the Data Processing System can incorporate all of the system enhancements which are inherent in these standard systems.

While the Data Processing System and its software may occur slightly ahead of implementing standard consoles, display systems and other man-machine interface hardware it would be beneficial if they evolve together.

The design of all system elements must take cognizance of the requirements which will have been previously established for the PC's and the IOM so that console positions, communication stations, displays and other considerations will have been included even though the introduction into the STS Payload Operations of these functions may not come until 1982 or later.

One of the last features of the integrated network of NASA-wide POCC's to be implemented will be the capability of one Center to back-up certain functions of another Center. This feature will not be needed until the traffic load approaches saturation for a given Center. Furthermore it can not be implemented effectively until DOMSAT communications can be made available economically to transfer high rate data from one POC to another. When the communications system is available it will, for example, be feasible for one Center to off-load some of the computing load of another Center by direct computer-to-computer transfer of jobs.

The implementation of remote portable POCC's for use in interfacing industrial and other users with the NASA operational system from their industrial facilities will be required as the STS becomes a recognized mode of space transportation. The capability to interface Remote Portable POCC's with JSC, GSFC and JPL in that order should be implemente into the system of Standard POCC's. If the requirements study shows the need for remote POCC's at a later time in the STS operational era, the implementation of the Remote POCC's could then be introduced with minimum impact on the SPOCC Network.

2.1.3 Subtask 2A Summary Conclusions and Recommendations

(1) The Standard POCC (SPOCC) is recommended for use during joint STS-Payload operational phases. In the case of large, complex, automated satellites, the continuing free-flight operations would be controlled from the payload-unique portion of the POCC, supported from time-to-time by a SPOCC when service missions, retrieval or back-up support are applicable.

(2) The SPOCC concept should be implemented and ready for support of payloads by the time the payload traffic model reaches 50 percent of the maximum level, which is mid-1982.

(3) The implementation of the SPOCC should evolve through augmentation of existing POCC systems and grow toward standardization as present systems are phased out due to obsolescence.

(4) As existing large-scale computers become obsolete, their replacements should be with minicomputers or modular components which can be dedicated to specific functions or sets of functions.

2.2 DETAIL OPERATIONAL INTERFACES BETWEEN STS OPERATOR AND PAYLOAD OPERATOR FOR PRELAUNCH AND FLIGHT PHASES (SUBTASK 2B)

2.2.1 Introduction

This subtask will detail and refine the implementation guidelines for the three NASA-approved flight control concepts for STS payloads in addition to DOD payloads with emphasis on operational interfaces with STS Flight Operation. Interface philosophy for both prelaunch and operational phases are established as follows:

- STS Payload Operator ↔ MCC-H (including DOD)
- STS Payload Operator ↔ KSC
- STS Payload Operator ↔ VAFB
- STS Payload Operator/STS Flight Operator - NASA Networks

2.2.1.1 Study Guidelines for Subtask 2B

The general study guidelines for the performance of Subtask 2B excerpted from the Study Plan are:

1. The STS, consisting of the Shuttle, IUS/SSUS and Spacelab support systems, with flight control from MCC/JSC, provides a service to "customers." ["Customers" here are all NASA Centers and selected non-NASA/non-DOD payloads that utilize NASA Centers for flight operations.]

2. The main thrust of this study effort will address STS payload programs during the operational STS phase.

3. Payload operations will be performed by a payload organization or its agent within safety limits established by the STS Flight Operator.

4. MCC/JSC will provide "flight support" for all NASA missions during prelaunch, ascent, reentry and landing. ["Flight Support" here includes:
   - GO/NO-GO for launch
   - Trajectory, Event Systems, Crew Status
   - Landing site readiness.]

PRECEDING PAGE BLANK NOT FILMED

5. For on-orbit operations during periods when STS has an operational interface with the payload, "flight support" will be jointly provided by MCC/JSC and the responsible Payload Operations Center. ["Flight Support" here includes all functions (tasks) done in support of the on-orbit operations.]

6. For on-orbit operations during periods when the STS has no operational interface with the payload, "flight support" will be provided by the responsible Payload Operations Center or Agent designated by the responsible Payload Project Office.

7. Payload organizations will utilize NASA Control Center host facilities for operations or establish their own Payload Operations Centers where economically justified.

8. Major NASA Control Centers shall provide host facilities for customers, or provide appropriate operational interfaces with customers' remote location with respect to the Control Center, if feasible.

9. Required voice, data, command and tracking channels will be provided to all operations areas, but coordinated by MCC/JSC so long as STS has an operational interface.

10. Simplicity of interfaces during launch/landing and during flight among user, developer and operator, and ease of total STS/STS payload ground system verification shall be considered as criteria in assessing interfaces and costs.

11. Emphasis will be placed on defining joint STS/Payload functions and flight phases rather than free-flight activities or mission operational activities involving only the payload.

2.2.1.2 Approach

The approach taken for the performance of Subtask 2B involves: 1) the assimilation of the basic study results with respect to the operational interfaces; 2) development of POCC/Payload end-to-end communications flow diagrams; and 3) descriptions of the communications flows for Payload Commands, Payloads Health Telemetry, and Payloads Science Telemetry. The criteria utilized during the establishment of the end-to-end flow diagrams were:

1. Simplification of System Operation
2. Standardization of Operating Procedures and Functions
3. Maximum utilization of existing and planned capabilities

Subtask 2B output goals achieved were:

1. Provide in one document the description of all payload interfaces to facilitate further assessment and optimization of the operational interfaces if and where required.

2. Assess specific interfaces for possible simplification and/or standardization.

3. Formulate and present study conclusions and recommendations.

2.2.1.3 Scope

This report will describe POCC interfaces in terms of prelaunch and operational phases, Sections 2.2.2 and 2.2.3, respectively. The interface descriptions in each section have been separated into Command and Telemetry links. The Telemetry links are further discussed in terms of Payload Health and Experiment Telemetry - data downlink transmission. The commands are described in terms of payload command uplink transmission. Figure 2.2-1 identifies the communications flow diagrams detailed in this report in terms of operations phases (prelaunch and operational), payload links (command or telemetry), and link types (Health or Science Telemetry) for each Payload Operations Center (JSC, GSFC, JPL, and DOD). The numbers within the blocks serve to:

1. Identify the figures within this report where specific interfaces are illustrated.

2. Identify which interfaces will be required for specific types of payloads.

The performance of this study task relied heavily on operations information from several payload organizations. Information included in this report was obtained either verbally or by reference to technical operations planning reports and presentations. Information acquired in the performance of this task may have been used directly within this report without alteration. TRW, therefore, wishes to acknowledge the sources of data utilized in the performance of this task by identifying technical contacts and references in Appendix B of this report.

PHASE	PAYLOAD LINK	TYPE	PAYLOAD ORGANIZATIONS/REPORT REFERENCE Figure			
			JSC	GSFC	JPL	DOD
PRELAUNCH	COMMAND		2.2-2	2.2-3	2.2-4	2.2-5
	TELEMETRY	HEALTH	2.2-6	2.2-7	2.2-8	2.2-9
		EXPERIMENT	2.2-10 2.2-11 (VAFB)	2.2-12	2.2-13	2.2-14
OPERATIONAL	COMMAND		2.2-15	2.2-16	2.2-17	2.2-18
	TELEMETRY	HEALTH	2.2-19	2.2-20	2.2-21	2.2-22
		EXPERIMENT	2.2-23	2.2-24	2.2-25	2.2-26

NOTES:

1) Numbers in blocks refer to figure numbers.
2) All interfaces based on KSC except 2.2-11 which is VAFB.

Figure 2.2-1. Summary of Figures Depicting Interfaces with POCC's, Prelaunch and Operational

2.2.2 Prelaunch Activities

2.2.2.1 General

Prelaunch activities for this study phase include those payload operations for Payload Commands, Payload Health Telemetry, and Payload Science Telemetry for JSC, GSFC, JPL, and DOD payloads during payload checkout and buildup of the Orbiter at the launch pad.

2.2.2.2 Command Interface

2.2.2.2.1 JSC Payload Command Interface, Prelaunch Phase, KSC (Figure 2.2-2)

The Spacelab and Spacelab payload sequence of operations are described in order to clarify the payload command interface requirements during the prelaunch phase. The operational sequence is presently envisioned as follows:

a. After Orbiter landing, Spacelab is moved to Operations and Checkout Building [Payload Processing Facility (PPF)] where it undergoes postflight test and checkout for two to three days. The Spacelab experimental equipment is also separated in the PPF.

b. Spacelab is subsequently placed in the Payload Checkout Stand (PCS) where it undergoes maintenance and refurbishment before the next flight. Commands are sent to the Spacelab and its payloads (and integrated payloads) from the Payload Control Room at KSC. The PCS provides for physical and functional simulation of the Orbiter interfaces. This simulation permits functional checks of Spacelab subsystems and payloads.

c. The Spacelab is removed from the PCS and transported to the Orbiter Processing Facility (OPF) (or Pad) where it is installed in the Orbiter. Subsequent to the Spacelab and its payload having been integrated with the Orbiter, all further remote control and monitoring of the Spacelab is performed from the Orbiter and/or LPS. The Spacelab checkout is performed from the Launch Processing System (LPS) payload station console located in the Launch Control Center (LCC) (see Figure 2.2-2).

Integrated testing of the Spacelab at the Pad is limited to those functions required to monitor the Spacelab subsystems and the payload for launch readiness and to perform minimal preparations of the Spacelab for launch.

The T = 0 umbilical is not used for Spacelab since there are no payload functions on it. Commands to the Spacelab are transmitted over the Orbiter Multiplexer-Demultiplexer (MDM) (see Figure 2.2-2).

FOLDOUT FRAME 1

FOLDOUT FRAME 2

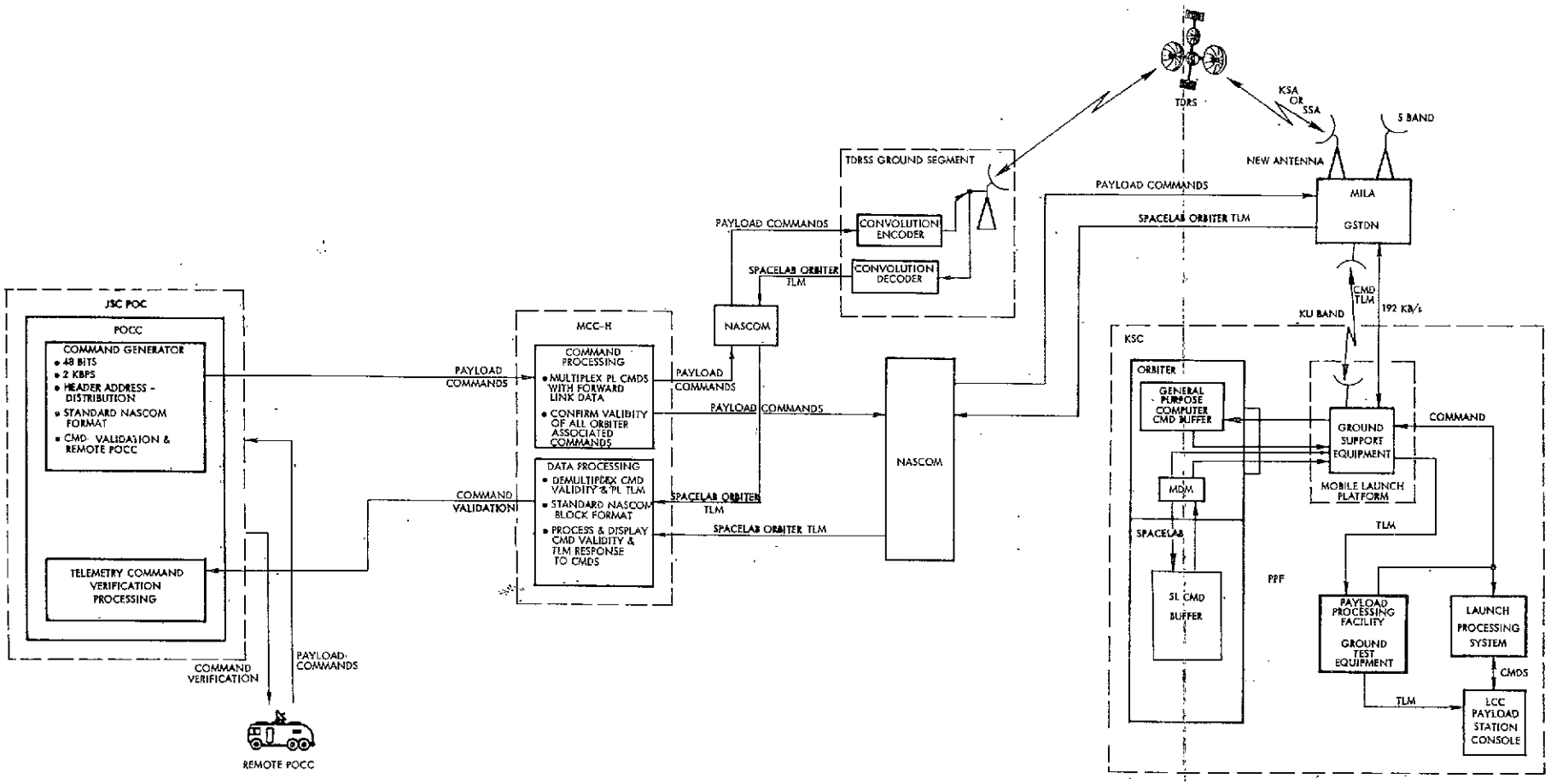

Figure 2.2-2. JSC Payload Command Interface, Prelaunch Phase, KSC

PRECEDING PAGE BLANK NOT FILMED

PRECEDING PAGE BLANK NOT FILMED

The command data flow to the Spacelab while in the PCS is from the PPF at KSC (Figure 2.2-2). Command validation messages are retransmitted from the Spacelab Command Data Buffer to the PPF from where the command messages are executed. When the Spacelab is on the Pad, commands are transmitted to it and its payloads from the Payload Station Console in the LCC. For end-to-end checkout, commands are also generated at the JSC POCC in NASCOM format and packed into NASCOM blocks for transmission via MCC-H over NASCOM links either directly or via the TDRSS ground station, over TDRS, to MILA. Command data is subsequently routed from MILA to the Orbiter and Spacelab, on the Pad, as shown in Figure 2.2-2.

All commands issued by JSC-POCC are stored in the Orbiter computers and the commands are returned to the MCC-H for confirmation. The MCC-H then transmits a confirmation message back to the POCC. Receipt of this positive confirmation message permits the POCC to transmit a "Command Execute" command.

Receipt of the "Command Execute" causes the Orbiter computer to transfer its stored commands to Spacelab and/or payloads.

This added precaution provides for extended crew safety and Orbiter protection.

2.2.2.2.2 GSFC Payload Commands Interface, Prelaunch Phase, KSC (Figure 2.2-3)

2.2.2.2.2.1 Payload Arrival

This concept is predicated on the assumption that the payload will have been thoroughly tested and evaluated at the payload contractor's facility or at an appropriate Government Facility prior to shipment to the launch site. Upon arrival of the payload at the launch site, it is transferred to the Payload Processing Facility (PPF), where it will be checked out with the Ground Test Equipment (GTE) which is comprised of a Payload Ground Station (PGS), a Remote Payload Station (PS) Console, and a Payload Stimulus Console.

Tests will be conducted at the PPF to verify safe payload arrival at the launch site.

2.2.2.2.2.2 Payload Installation

Payloads may be either pad-installed or pre-pad-installed, which requires a slight difference in operations at KSC. For example, a pre-pad-installed payload permits the performance of a more detailed payload check-out than would be possible if it was pad-installed. A pre-pad-installed payload also will require a payload stimulus console to provide detector stimulus and/or control signals.

A pad-installed payload would be provisioned with detector stimulus and control signals by virtue of its connectivity to the Orbiter. However, for mission-unique payloads, direct connections to the payload may not be allowed after payload installation in the Orbiter.

2.2.2.2.2.3 Interface Testing

Payload preinstallation testing at KSC will be conducted in a closed loop between the payload and the payload GTE as the focal point of tests operations as shown in the flow diagram, Figure 2.2-3. Tests will be conducted in the PPF to verify safe payload arrival at the launch site. The POCC will require data links to support commands and data flow and to verify communication links from KSC to GSFC. These links will be required to support POCC activities later in the payload flow. All the links envisioned as necessary to support the payload activity are given in Table 2.2-1.

Prior to moving the payload from the PPF to the Orbiter Processing Facility (OPF) or the Payload Changeout Room (PCR) for installation in the Orbiter, a POCC-PGS-payload interface verification check will be made to ensure POCC ability to command the payload.

It is planned that testing with the RF links will be performed in conjunction with the Orbiter avionics while the payload is still in the PPF and the Orbiter is in the OPF. The MCC-H will be required to be on-line to receive and interleave a 2-kbps payload-command bit-stream from the GSFC-POCC and transmit it to the Orbiter in the OPF via MILA and MCC-H. The Orbiter will relay the payload 2-kbps portion of the interleaved command bit-stream to the payload in the PPF.

FOLDOUT FRAME 1

FOLDOUT FRAME 2

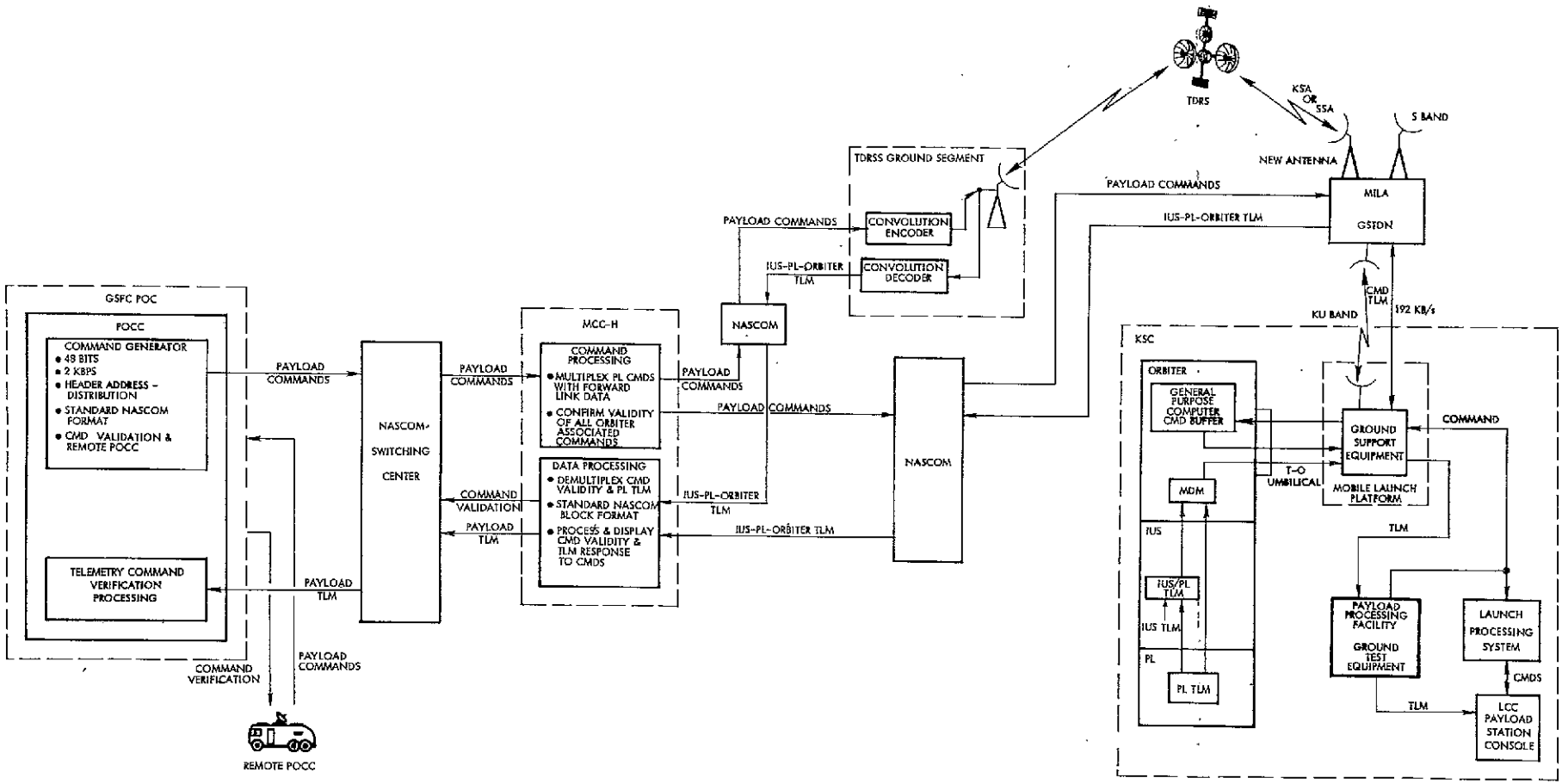

Figure 2.2-3. GSFC Payload Command Interface, Prelaunch Phase, KSC

Table 2.2-1. Information Links, Command Interface, Prelaunch

FROM \ TO	POCC	PPF	OPF	PAD
POCC	---	B, C		
PPF	B	---	A, B	A
OPF	B	A, B	---	
IVE		A		
PCR				B

LINK TYPES:
A. 16 KHz
B. 3 KHz Voice
C. 2 Kbps

PRECEDING PAGE BLANK NOT FILMED
Missing

Just prior to moving to the OPF, the onboard computer in the command and data handling portion of the payload will be loaded with the flight program (or verified if the program has been previously loaded). Once the memory is loaded and verified at the PPF, it is not anticipated that any further memory loads will be necessary. However, the memory will be dumped and verified at least one additional time prior to launch. After the payload arrives at the OPF and is installed in the Orbiter, the GTE (PGS) will monitor payload commands as available via the T = 0 umbilical. The POCC will also be able to monitor the payload commands either directly via the PGS through NASCOM or via the Orbiter OI link. The PGS will command directly via the T = 0 umbilical and the POCC can command either directly or via the Orbiter avionics.

After payload installation and completion of interface testing, further monitoring will be done by both the PGS and the POCC. Payload data flow will be the same at the pad as it was for OPF-installed payloads. It is anticipated that all critical payload/Orbiter interface testing will be verified prior to arriving at the launch pad for payloads installed in the OPF. For pad-installed payloads, interface testing will be performed immediately following installation. Most of the launch pad activity after installation and prior to the terminal count should consist mainly of payload monitoring.

After the payload is installed in the Orbiter at the OPF or at the pad, it is a requirement to check out the payload-to-Ku-band interface if such a communications system is aboard the payload. This is to be an end-to-end test for transmission of payload commands and receipt of telemetry between the POCC, MCC, GSTDN, TDRSS, Orbiter, and payload. The PGS will process the demodulated Ku-band data to assist the interface verification.

After the payload is installed in the Orbiter at the OPF or at the pad, the POCC software will verify the hardline connection for commands through the Orbiter avionics system.

2.2.2.2.2.4 KSC Interface Activity

The payload will employ the Flight Support System (FSS) to interface with the Orbiter. The FSS will bridge the standard Orbiter interface with the standard interface of the payload. The major components will be retention trunnions, positioning platform, payload station panel, power conditioner, and associated cabling. A special purpose manipulator system (SPMS) and module exchange mechanism (MEM) will be added for a servicing mission.

The interface verification equipment (IVE) will be used to verify the mechanical and electrical interfaces of the FSS-payload to those of the Orbiter prior to on-line operations (installation to the Orbiter). Typical examples would be verifying the Orbiter accommodations to support payloads using the same interfaces (use of an integrated cargo harness) and verification of non-interference between payload-to-payload interfaces (RFI, EMI, etc.). The performance of these verifications at KSC will require payload command, telemetry, and voice lines between the IVE facility and the PGS in the PPF.

2.2.2.2.3 JPL Payload Command Interface, Prelaunch Phase, KSC (Figure 2.2-4)

2.2.2.2.3.1 Payload Arrival

JPL payloads arriving at KSC are brought to the Payload Assembly and Checkout Facility (Building AO) prior to mating with the IUS. The payload is then transferred to the Sterilization, Assembly, and Encapsulation Facility (SAEF) where the payload will be mated to the IUS following the performance of a hierarchy of tests and operations.

It is presumed that a Shuttle Orbiter simulator will be available to support the prelaunch tests in the SAEF such as:

1. Verification and system testing of the payload-IUS-Orbiter interface

2. End-to-end Data System capabilities.

2.2.2.2.3.2 Payload Installation

Integration of the spacecraft with the IUS and the Orbiter may be accomplished as a horizontal installation of the cargo into the Orbiter in

the Orbiter Processing Facility (OPF) or a vertical installation of the cargo (or payload) into the Orbiter on the launch pad.

The primary reasons for preferring a cargo installation at the launch pad are:

1. It represents the shortest on-pad time.
2. The availability of a continuously controlled and monitored environment.

2.2.2.2.3.3 Interface Testing

The operations concept for interface testing of the payload commands at KSC is shown in Figure 2.2-4. This operations concept assumes that preliminary testing of the payload at the subsystem and system level will have been completed; that the payload/IUS interface compatibility will have been tested; and that the payload end-to-end data system and the STS Data System mission-dependent elements will have both been tested and verified.

Upon completion of the payload/IUS integration and verification of the payload/IUS and cargo/Orbiter interfaces, a payload/STS end-to-end Data System compatibility test will be performed. This test will provide verification that the JPL POCC can command the payload.

Remote monitoring and control of the payload at the launch pad will be retained in Building AO via landlines to payload GSE installed in the MLP and then to the payload via hardlines to the T = 0 umbilical. Verification of command reception is also provided by an S-band link between the payload and Building AO via the T = 0 umbilical and launch pad/AO link.

S-band and X-band link verification is performed with the cargo doors open and the RF signals are reradiated between the launch pad MLP and MIL-71.

The flow of commands are generated at JPL POCC and are transferred to the payload via several different paths.

1. JPL POCC generated commands are transferred to MCC-H via NASCOM where the validity of all Orbiter associated commands are confirmed. The commands are then transferred via NASCOM to the TDRSS which in turn communicates with MILA-GSTDN via KSA or SSA band. The MILA then relays the command to the Orbiter via the ground support equipment (GSE) of the MLP.

FOLDOUT FRAME 1

FOLDOUT FRAME 2

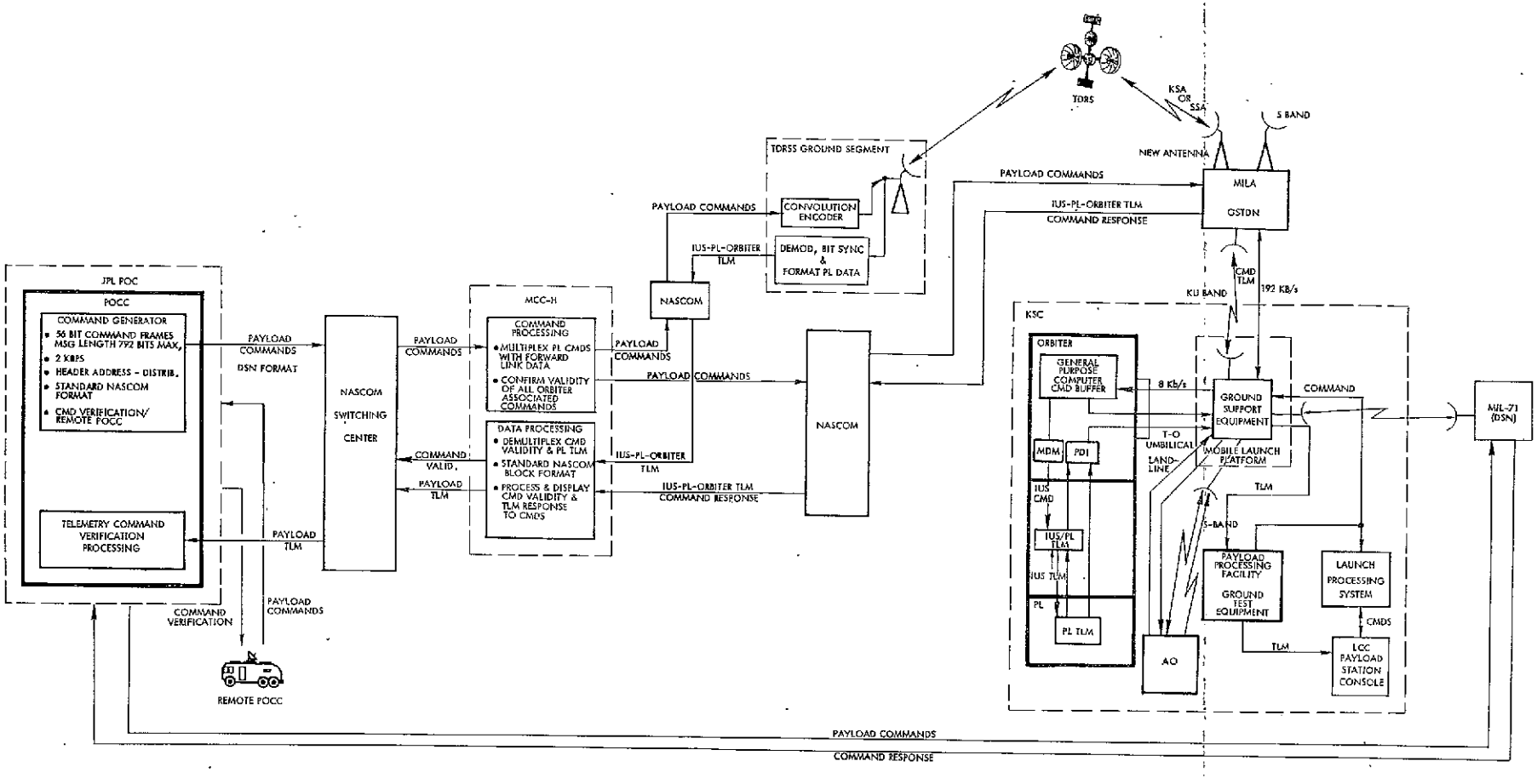

Figure 2.2-4. JPL Payload Command Interface, Prelaunch Phase, KSC

PRECEDING PAGE BLANK NOT FILMED
MISSING

2. JPL POCC generated commands are transferred to MCC-H via NASCOM where the validity of all Orbiter associated commands are confirmed. The commands are then transferred via NASCOM to MILA GSTDN and thence to the Orbiter via the GSE of the MLP. Upon receipt, validation, and distribution of the command, a command response is generated and is returned to the JPL POCC via the return path (MCP-MILA-NASCOM-MCC-H-NASCOM-JPL POCC).

Command verification is acquired by processing the payload telemetry which will have been stripped from the payload-IUS-Orbiter telemetry data stream by MCC-H.

2.2.2.2.4 DOD Payload Command Interface, Prelaunch Phase, KSC (Figure 2.2-5)

Prelaunch communications are designed to provide DOD payload integration and checkout and range safety. The communications flow is shown in Figure 2.2-5. The communications requirements are based on the evaluation of the KSC systems description, available Ground Operations System material, and DOD Mission Operations System Segment Communications and Tracking Requirements Description.

DOD payload checkout prior to launching is accomplished via the Remote Vehicle Checkout Facility (RVCF) at KSC. The RVCF receives telemetry and transmits commands to the payload, via SGLS, and verifies the Orbiter's FM Communication System compatibility with the AF Satellite Control Facility (SCF).

DOD payload commands are transmitted to the DOD payload(s) and IUS/SSUS at KSC via the following paths:

a. Dedicated payload safing commands for caution and warning (C and W) from DOD Payload Processing Facility via Launch Control Center (LCC) to Pad. The command data transfer takes place using the T = 0 payload umbilical cable.

b. Commands are transmitted over DOD Remote Vehicle Checkout Facility (RVCF) at KSC via Space-Ground Link Subsystem (SGLS) PM link to Pad and DOD payload and/or IUS.

c. Commands are transmitted over MCC-H via NASCOM, TDRS, MILA and LCC to Pad. All DOD commands expected to be sent over MCC-H are coordinated beforehand with MCC-H. Command validation and verification is confirmed at the MCC-H and command telemetry response (verification) is confirmed at the DOD POCC. MCC-H can perform command lockout for invalid DOD commands and DOD can make sure

FOLDOUT FRAME

FOLDOUT FRAME 2

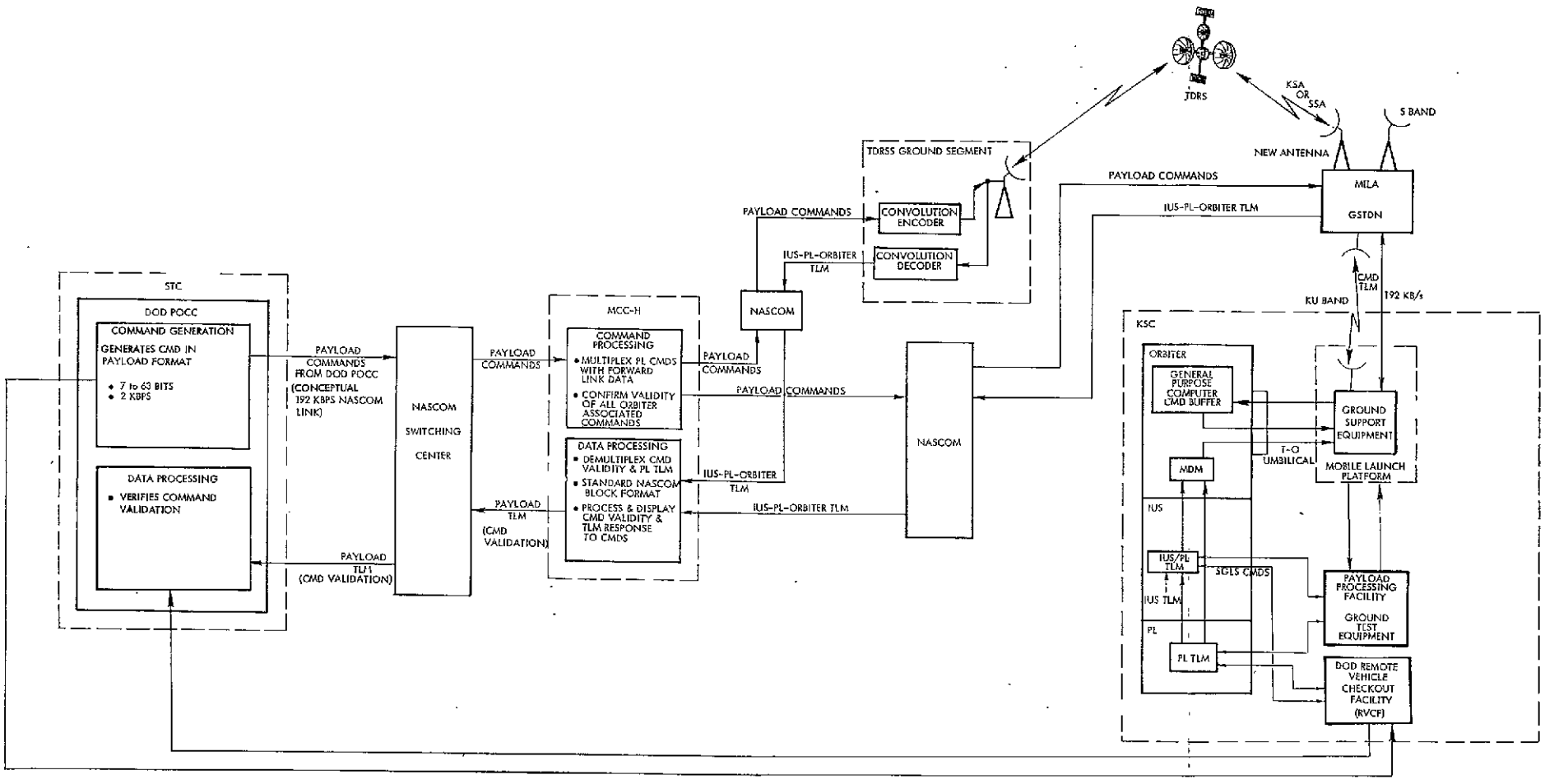

Figure 2.2-5. DOD Payload Command Interface, Prelaunch Phase, KSC

ORIGINAL PAGE IS
OF POOR QUALITY

NASA will not transmit NASA commands to DOD payloads. This link is only used for backup.

d. Prestored commands on the Orbiter are activated over any of the three links.

All commands are two-stage; DOD-POCC transmits command to payload command buffer, the command is returned over forward telemetry link to POCC for validation and enable command is transmitted to payload from POCC.

Communications with payload and IUS/SSUS when payloads are in the Orbiter on the Pad is either over a hardwired link, via the Payload Data Interleaver or MDM to computers on the Shuttle. The DOD POCC must obtain permission from MCC-H and LCC to transmit commands to the payloads.

2.2.2.3 Health Telemetry Interfaces

2.2.2.3.1 JSC Payload Health Telemetry Interface, Prelaunch Phase, KSC (Figure 2.2-6)

The flow of Payload Health Telemetry is summarized in Figure 2.2-6. In the Spacelab checkout phase before removal to the pad, Health Telemetry data is received directly from the Spacelab and/or payloads at the LCC Payload Station Console. After removal to the pad, Health Telemetry is received over the hardwired link from the Orbiter MDM via the Ground Support Equipment and PPF to the LCC Payload Station Console. For end-to-end checkout, Health Telemetry will be transmitted over MILA/GSTDN either directly over NASCOM ground link or via the TDRS link and NASCOM to MCC-H where the Spacelab and payload Health Telemetry is demultiplexed from Orbiter telemetry and forwarded to the JSC POCC for processing and display. The Health Telemetry, where required, will also be forwarded from the JSC POCC to remote POCC's.

2.2.2.3.2 GSFC Payload Health Telemetry Interface, Prelaunch Phase, KSC (Figure 2.2-7)

2.2.2.3.2.1 Payload Arrival, Installation, and KSC Interface Activity

The payload arrival, installation, and KSC interface activities for the GSFC payload Health Telemetry interfaces are similar to those described for the GSFC payload command interfaces in Sections 2.2.2.2.2.1, 2.2.2.2.2.2, and 2.2.2.2.2.4 of this report.

PRECEDING PAGE BLANK NOT FILMED

FOLDOUT FRAME 1

FOLDOUT FRAME 2

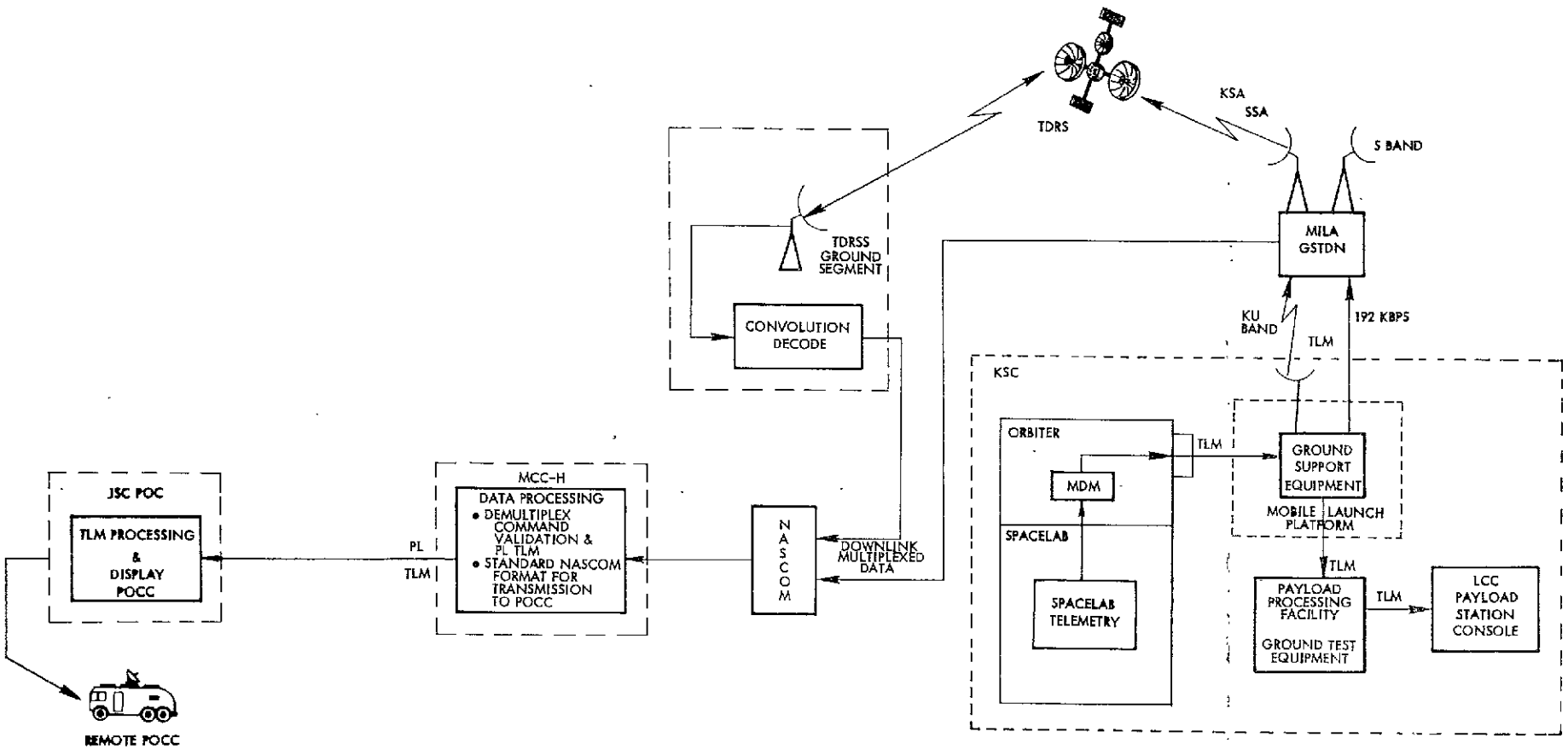

Figure 2.2-6. JSC Payload Health Telemetry Interface, Prelaunch Phase, KSC

18

2.2.2.3.2.2 Interface Testing PRECEDING PAGE BLANK NOT FILMED Missing

Payload preinstallation testing at KSC will be conducted in a closed loop between the payload and the payload GTE including the PGS as the foca point of test operations as shown in Figure 2.2-7. Tests will be conducte in the PPF to verify safe payload arrival at the launch site. The POCC will require data links to support commands and data flow and to verify communication links from KSC to GSFC. These links will be required to support POCC activities later in the payload flow. All the links envisioned as necessary to support the payload activity are given in Table 2.:

Prior to moving the payload from the PPF to the Orbiter Processing Facility (OPF) or the Payload Changeout Room (PCR) for installation in the Orbiter, a POCC-PGS-payload interface verification check will be made to ensure that the POCC can receive and process payload Health Telemetry (non-interleaved) direct data.

Testing with the RF links will be performed in conjunction with the Orbiter avionics while the payload is still in the PPF and the Orbiter is in the OPF. Payload Health Telemetry will be transmitted from the PPF to the OPF and interleaved with the Orbiter 128 kbps telemetry bit stream. This bit stream will be relayed to the POCC via MILA and the MCC.

Just prior to moving to the OPF, the onboard computer in the command and data handling module of the MMS will be loaded with flight program (or verified if the program has been previously loaded). Once the memory is loaded and verified at the PPF, it is not anticipated that any further memory loads will be necessary. However, the memory will be dumped and verified at least one additional time prior to launch. After the payload arrives at the OPF and is installed in the Orbiter, the PGS will monitor payload Health Telemetry directly as available via the T = 0 umbilical. The POCC will also be able to monitor the payload Health Telemetry either directly via the PGS through NASCOM or directly via the Orbiter OI link. The PGS will command directly via the T = 0 umbilical and the POCC can command either directly or via the Orbiter avionics. When the Orbiter avionics are available, the POCC should be able to back up the PGS and monitor the payload via the Orbiter OI link.

FOLDOUT FRAME 1

FOLDOUT FRAME 2

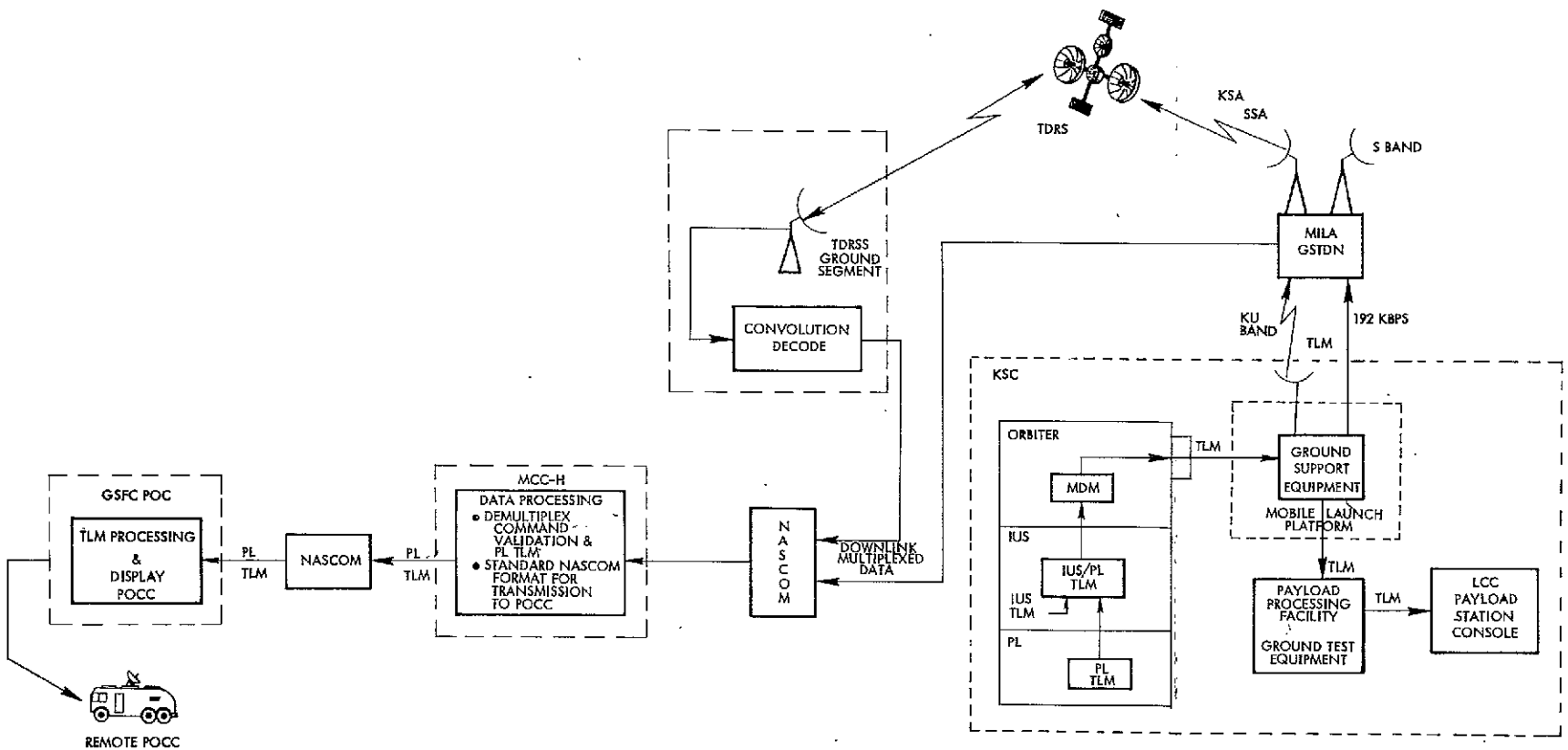

Figure 2.2-7. GSFC Payload Health Telemetry Interface, Prelaunch Phase, KSC

Table 2.2-2. Information Links, Payload Health Interface, Prelaunch

FROM \ TO	POCC	PPF	OPF	PAD
POCC	----	C,E		
PPF	C	---	A,B	A,C
OPF		C,D		
IVE		A		
PCR				C
LCC		C		

LINK TYPES: A - 1 MHZ BW 64 kbps
B - 128 KHZ BW 64 kbps
C - 3 KHZ Voice
D - 16 KHZ
E - 128 kbps Direct

PRECEDING PAGE BLANK NOT FILMED
missing

After payload installation and completion of interface testing, further monitoring will be done by both the PGS and the GSFC POCC. Payload data flow will be the same at the pad as it was for OPF-installed payloads. It is anticipated that all critical payload/Orbiter interface testing will be verified prior to arriving at the launch pad for payloads installed in the OPF. For pad-installed payloads, interface testing will be performed immediately following installation. Most of the launch pad activity after installation and prior to the terminal count should consist mainly of payload monitoring.

After the payload is installed in the Orbiter at the OPF or at the pad, it is a requirement to check out the payload-to-Ku-band interface if such a communications system is aboard the payload. This is to be an end-to-end test for transmission of payload commands and receipt of telemetry between the POCC, MCC, GSTDN, TDRSS east, Orbiter, and payload. The PGS will process the demodulated Ku-band data to assist the interface verification.

After the payload is installed in the Orbiter at the OPF or at the pad, the POCC software will verify the hardline connection for commands through the Orbiter avionics system.

2.2.2.3.3 JPL Payload Health Telemetry Interface, Prelaunch Phase, KSC (Figure 2.2-8)

2.2.2.3.3.1 Payload Arrival and Installations

The payload arrival and installations interface activities for the JPL payload Health Telemetry interfaces are identical to those described in Sections 2.2.2.2.3.1 and 2.2.2.2.3.2 of this report.

2.2.2.3.3.2 Interface Testing

The operations concept for interface testing of the payload Health Telemetry at KSC is depicted in Figure 2.2-8. As described in Section 2.2.2.2.3.3 of this report, this operation concept assumes that preliminary testing has been performed and that remote monitoring and control will be retained in Building AO as described in the reference section. In addition, payload Health Telemetry is directly transferred to the AO via an S-band link,

FOLDOUT FRAME 1

FOLDOUT FRAME 2

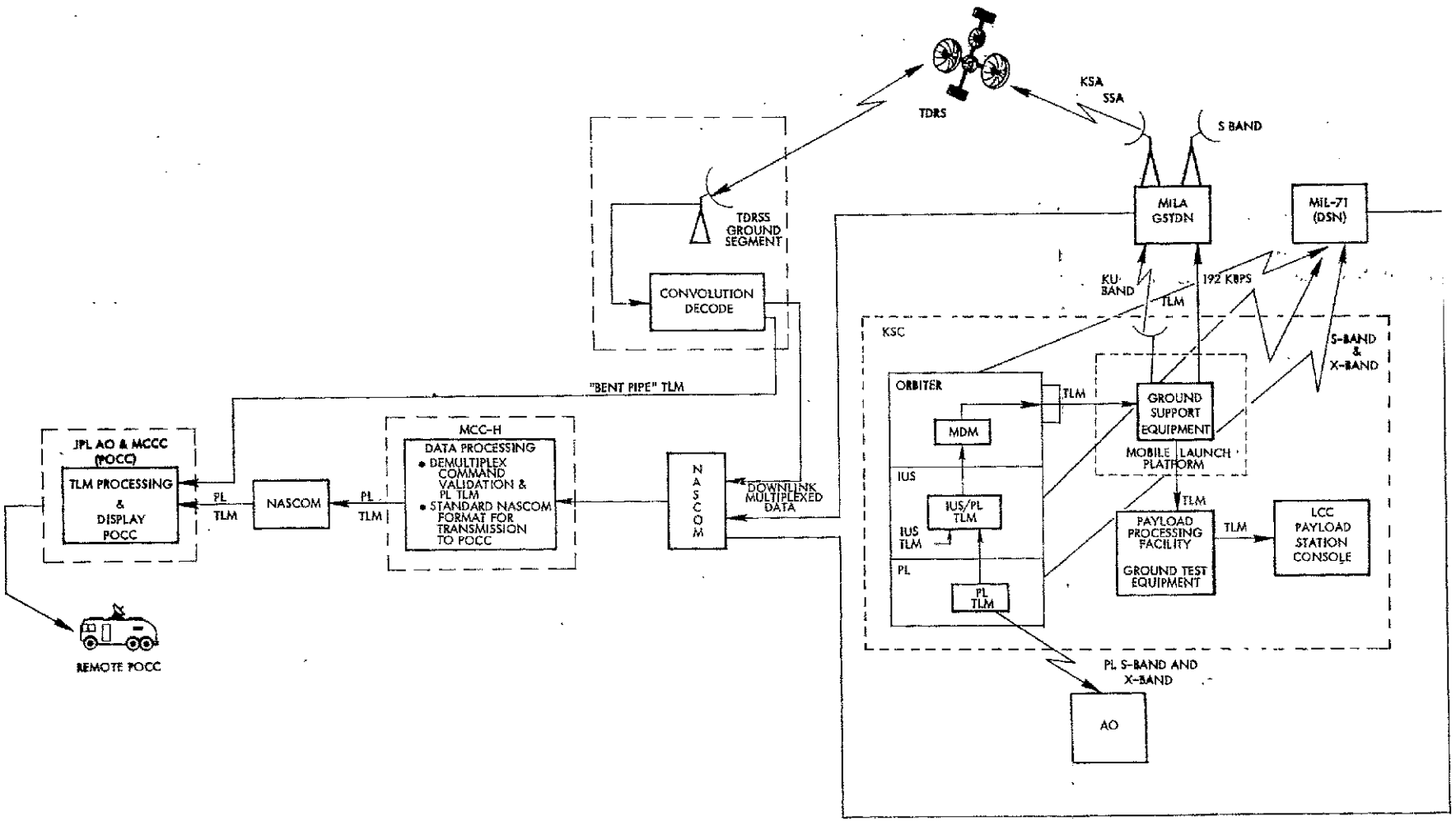

Figure 2.2-8. JPL Payload Health Telemetry Interface, Prelaunch Phase, KSC

PRECEDING PAGE BLANK NOT FILMED

S-band and X-band link verification is performed with the cargo doors open and the Health Telemetry signals are radiated to the MLP where they are reradiated to MILA and MIL-71.

The flow of Health Telemetry from the payload to the JPL POCC is by the following several paths:

1. Payload Health Telemetry is radiated directly via S-band and X-band to MIL-71 for transmission by NASCOM directly to JPL (AO) and MCCC (JPL POCC).

2. Payload Health Telemetry is multiplexed with the IUS and via an S-band link to MILA and then NASCOM to MCC-H where the payload-IUS Health Telemetry is demultiplexed and the payload portion of the data stream is transferred via NASCOM to JPL POCC for processing and display.

3. Payload-IUS Health Telemetry is multiplexed with the Orbiter and via either S-band or Ku-band to MILA. The telemetry data is then transferred to MCC-H via the NASCOM where the Orbiter telemetry data stream is demultiplexed and the payload portion of the data stream is transferred via NASCOM to the JPL POCC for processing and display.

4. Payload "Bent Pipe" data from the Orbiter is transferred via Ku-band to the MILA, then relayed to the JPL POCC via the TDRSS-NASCOM.

5. The TDRSS link serves as an alternate link for MILA.

2.2.2.3.4 DOD Payload Health Telemetry Interface, Prelaunch Phase, KSC (Figure 2.2-9)

The Payload Health Telemetry is normally transmitted directly to the DOD POCC from the DOD Payload Processing Facility (PPF) as shown in Figure 2.2-9. During the latter phases of prelaunch checkout at the Pad, the communications link via MILA, TDRSS, NASCOM and MCC-H is checked out. This link ensures both command and telemetry response compatibility of communications between the Payload and DOD POCC. The Payload Health Telemetry includes command verification and payload status information.

At KSC, the payload telemetry is processed by the DOD Payload Processing Facility and monitored in the Launch Control Center at the Payload Station Console. IUS-Payload and Payload Health Telemetry can also be transmitted directly over the FM transmitter to the PPF, or via the Remote Vehicle Checkout Facility to STC and the DOD POCC.

FOLDOUT FRAME 1

FOLDOUT FRAME 2

MISSING PAGE NOT FILMED

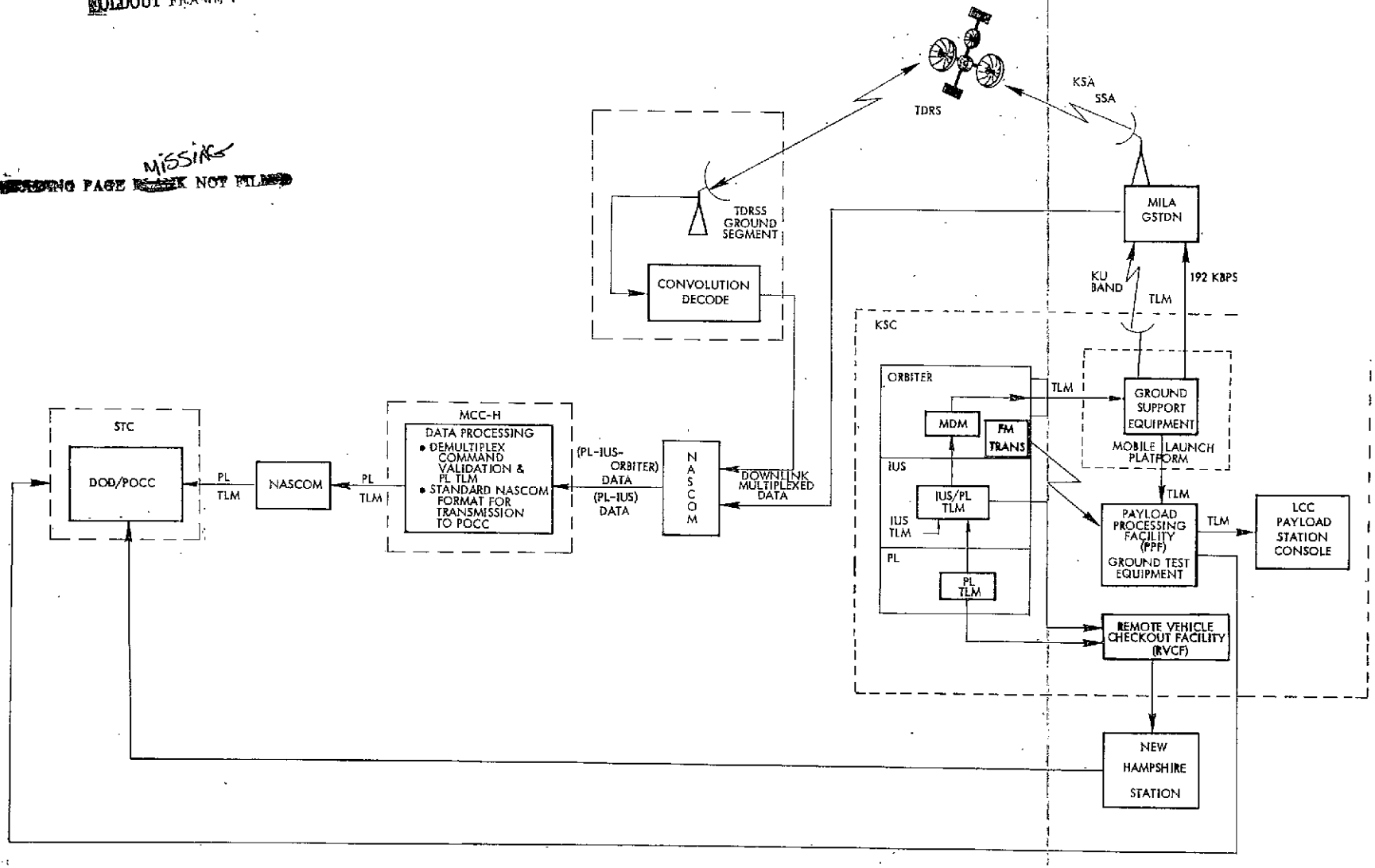

Figure 2.2-9. DOD Payload Health Telemetry Interface, Prelaunch Phase, KSC

MISSING
PRECEDING PAGE BLANK NOT FILMED

2.2.2.4 Science Telemetry Interfaces

2.2.2.4.1 JSC Payload Science Telemetry Interface, Prelaunch Phase, KSC (Figure 2.2-10)

The payload Science Telemetry flow is shown in Figure 2.2-10. Similar to Health Telemetry in the prelaunch phase, Spacelab and payload data is initially, during the Spacelab checkout phase, transmitted from Spacelab to the LCC Payload Station Console. Selected Science Telemetry will be multiplexed with Orbiter data during the on-pad phase and transmitted over the MDM to GSTDN and either over ground links via NASCOM or using TDRS and the Ku-band link to the TDRSS ground station where it may either be multiplexed with tracking data for transmission over a wideband T1 channel to MCC-H or transmitted directly over a DOMSAT channel to MCC-H. MCC-H will subsequently demultiplex the Spacelab Science Telemetry data and forward it to the JSC POCC. The science data transmission between the JSC POCC and a remote POCC can be either via DOMSAT for higher bandwidth data or via landlines.

2.2.2.4.2 JSC Payload Science Telemetry Interface, Prelaunch Phase, VAFB (Figure 2.2-11)

The flow diagram, Figure 2.2-11, depicts the flow of JSC Payload Science Telemetry data from a Spacelab mounted payload aboard an Orbiter stationed at the launch pad at VAFB.

Similar to JSC Payload Science Telemetry handling at KSC, all detailed Wideband Science Telemetry will have been previously checked out at the Launch Control Center Payload Station Console at VAFB prior to moving the Orbiter/Spacelab to the pad at VAFB. Only selected Science Telemetry multiplexed with Orbiter data will be transmitted from the Orbiter to the Ground Support Equipment which transmits the data to the TDRSS ground station over the TDRSS Ku-band link.

Identical to telemetry transmission from the Spacelab at KSC to the JSC POCC, the science data transmission between the JSC POCC and a remote POCC can be either via DOMSAT for higher bandwidth data or via landlines.

MISSING
PRECEDING PAGE BLANK NOT FILMED

FOLDOUT FRAME 2

FOLDOUT FRAME 1

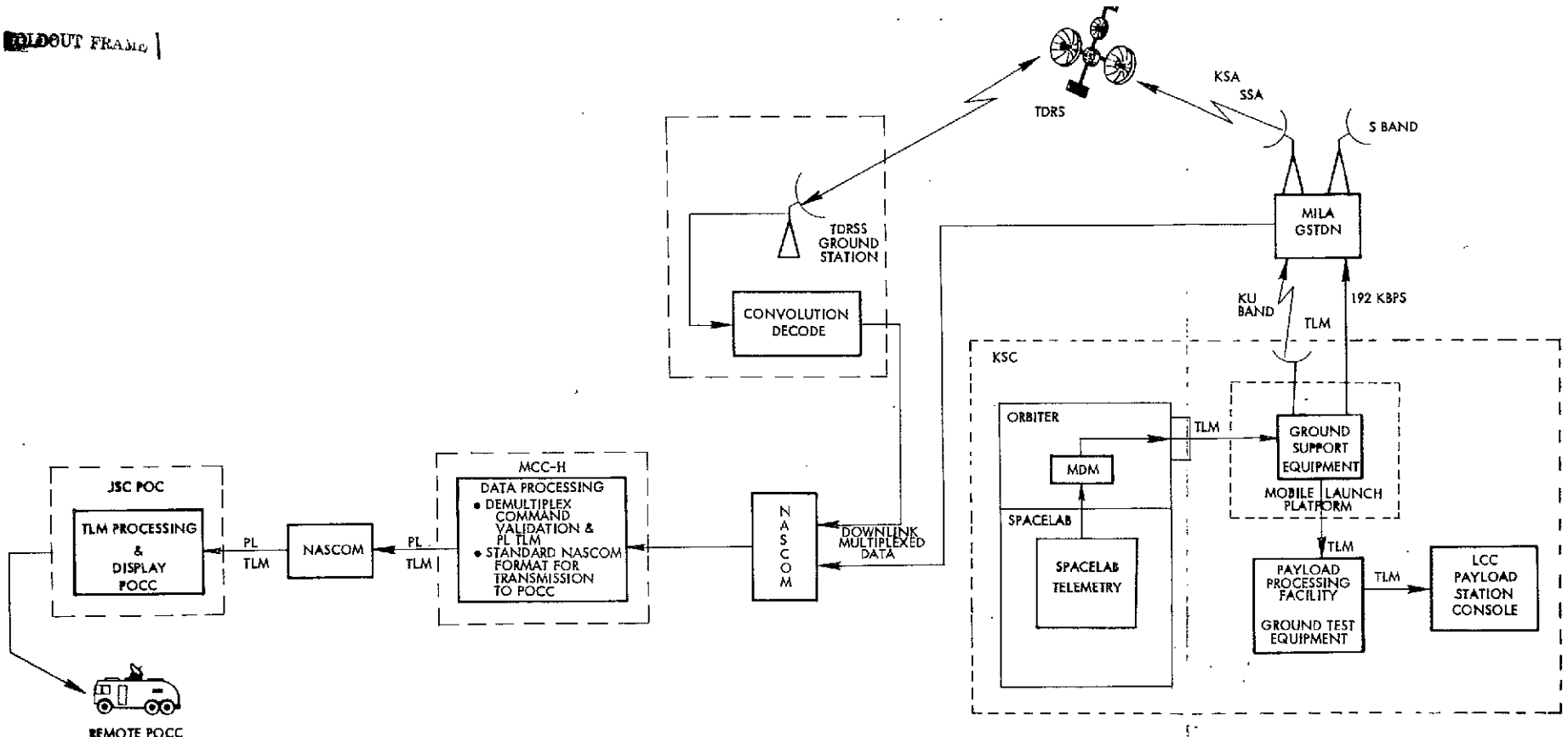

Figure 2.2-10. JSC Payload Science Telemetry Interface, Prelaunch Phase, KSC

FOLDOUT FRAME 1

FOLDOUT FRAME 2

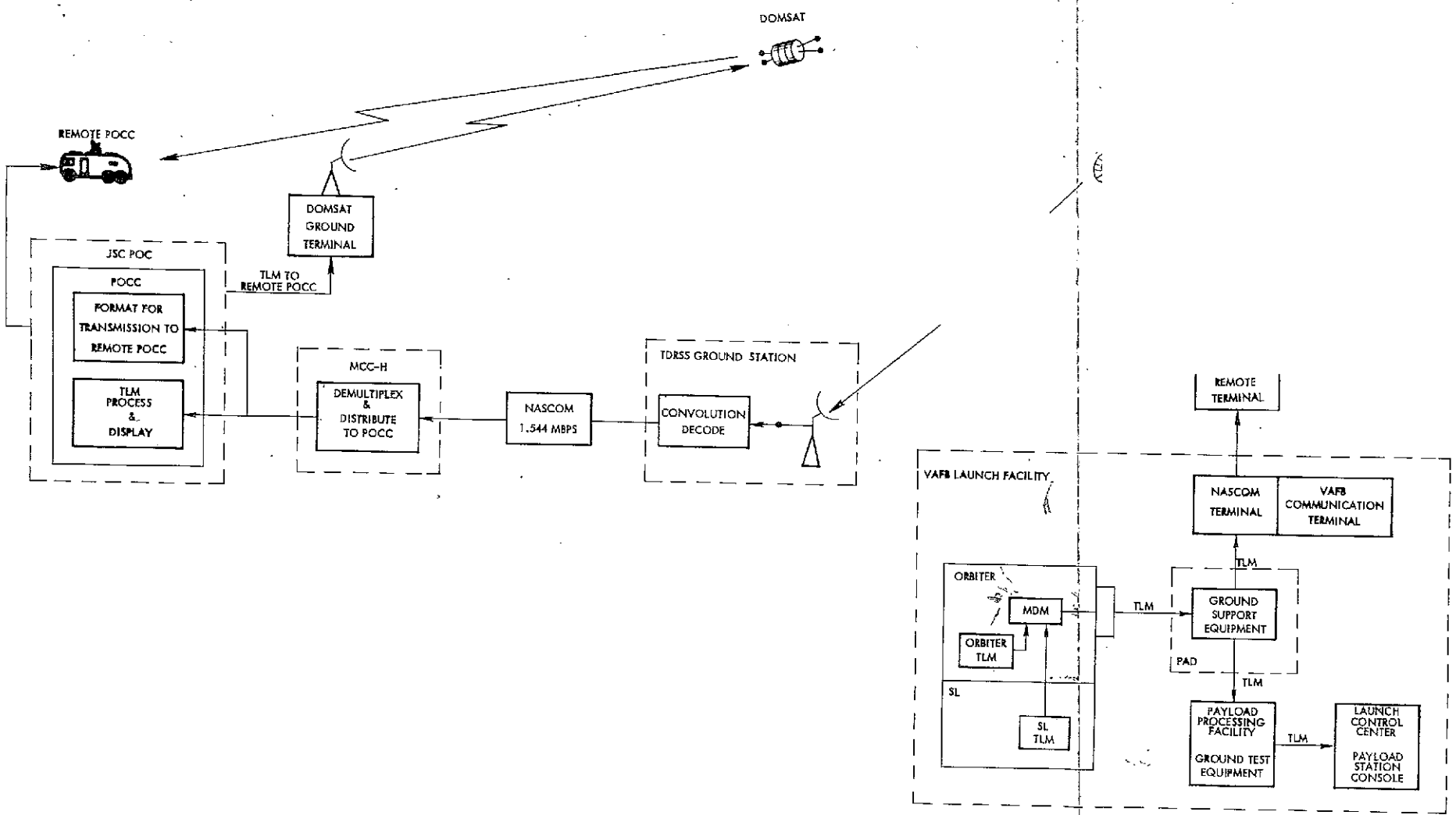

Figure 2.2-11. JSC Payload Science Telemetry Interface, Prelaunch Phase, VAFB

2.2.2.4.3 GSFC Payload Science Telemetry Interface, Prelaunch Phase, KSC (Figure 2.2-12)

Science Telemetry aboard the GSFC payloads is handled identical to the payload Health Telemetry using the same RF links. There is, however, an additional RF link employed between the TDRSS Ground Segment and the GSFC POCC. This additional RF link is the DOMSAT (Domestic Satellite) which parallels the NASCOM/MCC-H path between the TDRSS and the GSFC POCC. This concept is shown in Figure 2-11.

2.2.2.4.4 JPL Payload Science Telemetry Interface, Prelaunch Phase, KSC (Figure 2.2-13)

The flow diagram, Figure 2.2-13, depicts the flow of Payload Science Telemetry data from a JPL payload located aboard the Orbiter at the KSC launch pad to its associated JPL POCC. Payload telemetry distribution at KSC is also transmitted to the Payload Processing Facility (PPF) and the Payload Station Console (PSC) in the Launch Control Center (LCC).

The Payload Science Telemetry is normally transmitted back to the JPL POCC via the NASCOM ground link; however, during the latter phases of the prelaunch checkout at the pad, the communication link via MILA through TDRSS is checked out. This link ensures both command and telemetry response compatibility of the communications between the payload and its POCC. The Payload Science Telemetry is defined as including command verification and payload status. Command verification is the Payload Telemetry response to a command. Payload status is indicated on the flow diagram as PL TLM.

The remote POCC can receive the same telemetry as the POCC since it has the capability of generating commands and requires the telemetry for command verification and execute.

At KSC the Payload Telemetry is processed by the Payload Processing Facility and monitored in the Launch Control Center at the Payload Station Console.

All payload telemetry is multiplexed with the IUS and Orbiter Telemetry to simulate the actual multiplexing used during Operational Flight.

FOLDOUT FRAME 1

FOLDOUT FRAME 2

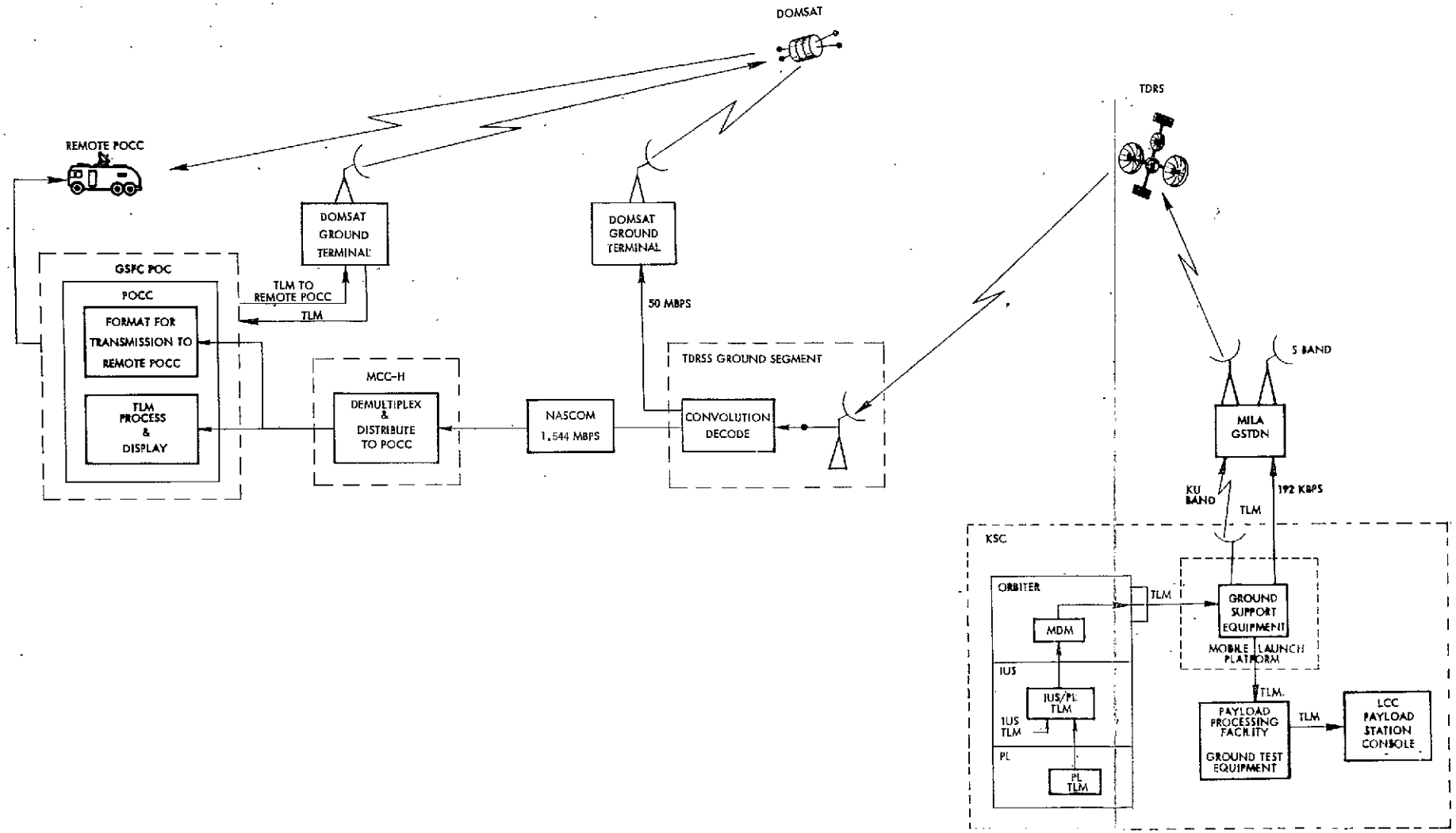

Figure 2.2-12. GSFC Payload Science Telemetry Interface, Prelaunch Phase, KSC

PRECEDING PAGE BLANK NOT FILMED

FOLDOUT FRAME 1

FOLDOUT FRAME 2

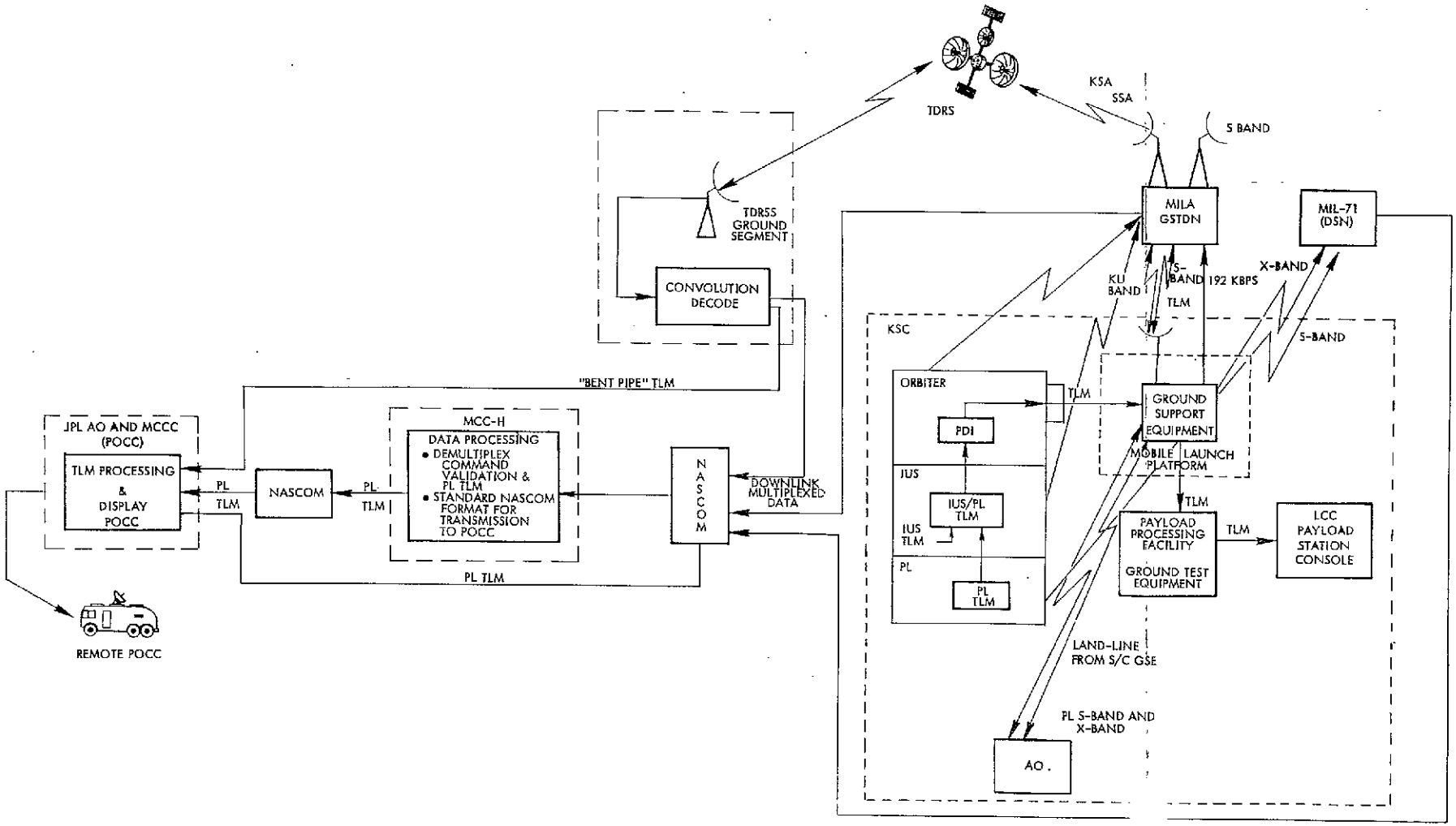

Figure 2.2-13. JPL Payload Scien
Telemetry Interfa
Prelaunch Phase, I

PRECEDING PAGE BLANK NOT FILMED

2.2.2.4.5 DOD Payload Experiment Data Flow, Prelaunch Phase, KSC (Figure 2.2-14)

The Payload Experiment Telemetry is transmitted directly from the payload in the Orbiter, over an umbilical hardline to the DOD Payload Processing Facility. There will be no NASA interfaces for the DOD Experimental Data Telemetry Link.

The DOD payload experimental data flow during the prelaunch phase is shown in Figure 2.2-14.

PRECEDING PAGE BLANK NOT FILMED

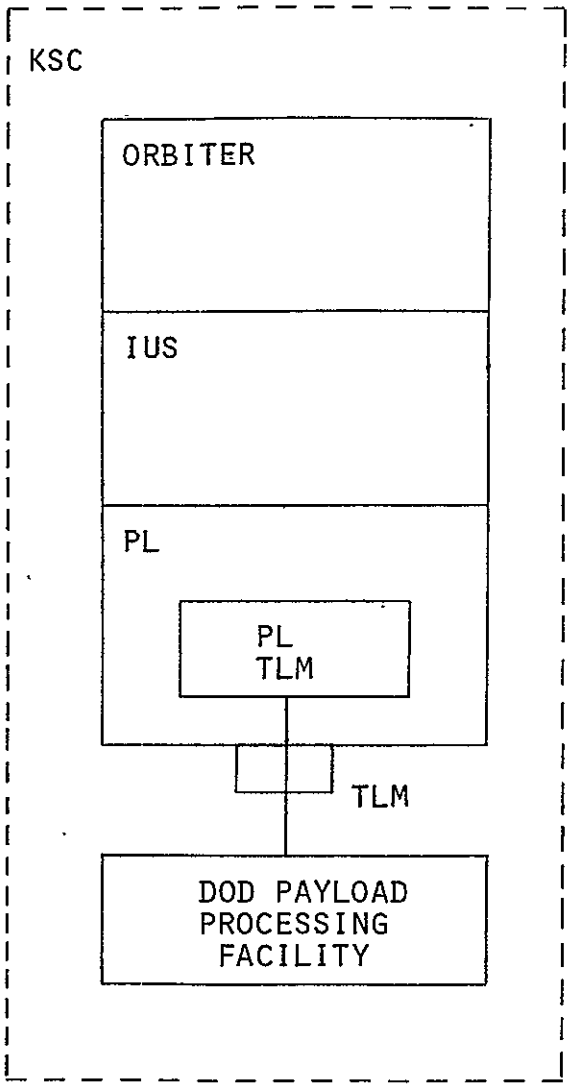

Figure 2.2-14. Payload Experiment Data Flow, Prelaunch Phase, DOD Payload, KSC

2.2.3 Operational Activities

2.2.3.1 General

Operational activities for this study include those payload operations for Payload Commands, Payload Health Telemetry, and Payload Science Telemetry for JSC, GSFC, JPL, and DOD payloads after launch and including ascent, on-orbit, and deployment phases. These operations will include those payload-associated operations while the payload is:

1. In initial free flight
2. Attached to the IUS/SSUS
3. Attached to the Orbiter in orbit.

2.2.3.2 Command Interfaces

2.2.3.2.1 JSC Payload Command Interface, Operational Phase (Figure 2.2-15)

Figure 2.2-15 shows the command data flow from a JSC POCC through the Orbiter to the Spacelab and Spacelab payloads. Payload commands are transmitted in standard NASCOM format to MCC-H where payload commands are multiplexed with forward link data destined for the STDN ground station to GSFC on a 1.544 Mbps NASCOM link. GSFC (NASCOM) performs a message switch function and routes the command blocks to the designated station based on a station ID that is located in the overhead of the NASCOM command data block.

The uplink GSTDN station validates the command message, adds a 32-bit sync and station ID word, and time division multiplexes the command data with voice. The station then transmits a 72 Kbps (high bit-rate) or a 32 Kbps (low bit-rate) command and voice data stream to the Orbiter. Commands are subsequently retransmitted from the Spacelab and payloads by the Orbiter to both MCC-H and the Spacelab POCC for verification and logging before a command execute command is transmitted to the payload. Commands

FOLDOUT FRAME 1

FOLDOUT FRAME 2

PRECEDING PAGE BLANK NOT FILMED

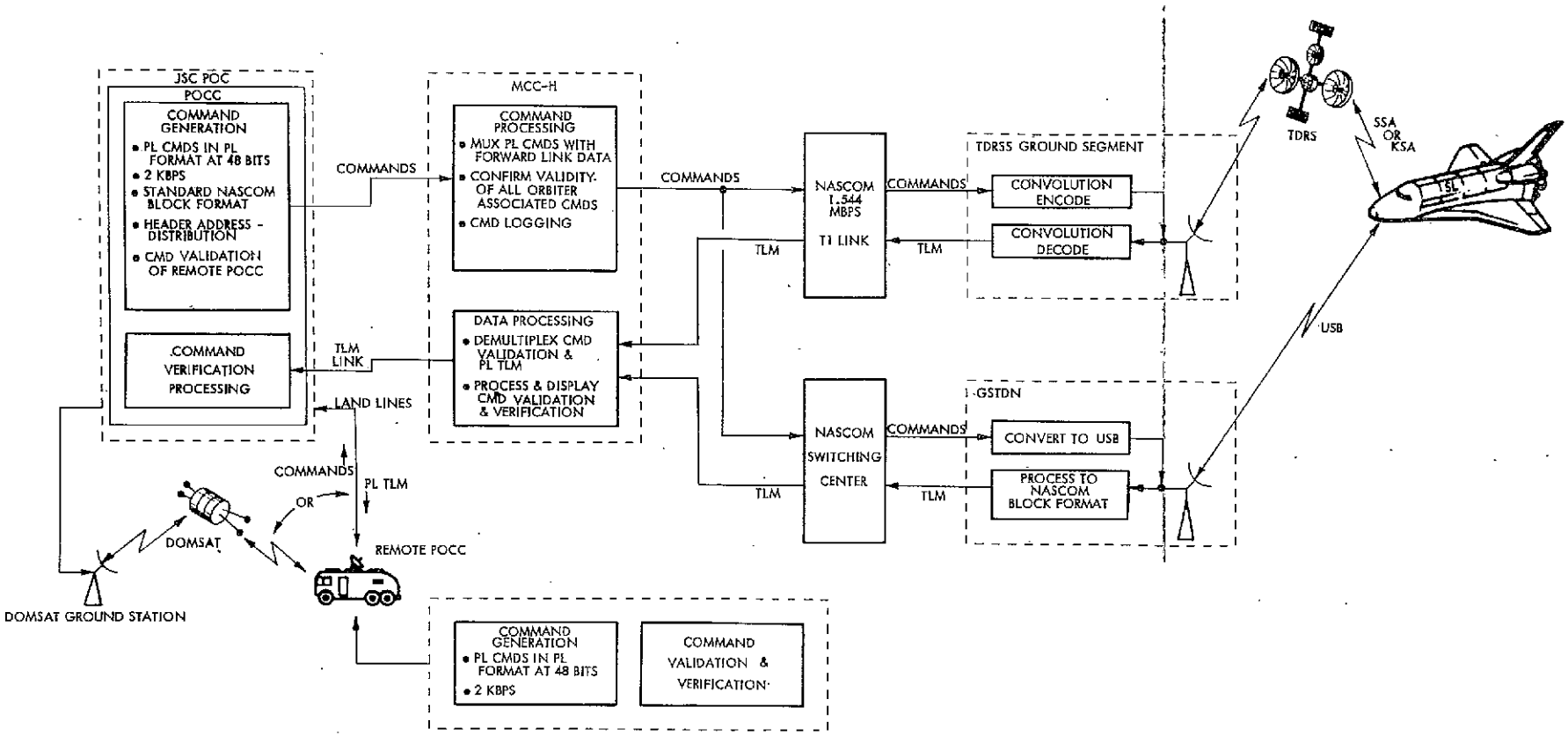

Figure 2.2-15. JSC Payload Command Interface, Operational Phase

are validated* only at MCC-H before a command execute message is transmitted to the Spacelab and payload(s) from the POCC. A list of Spacelab commands which could constitute a hazard to the Orbiter and payloads is identified prior to flight and inhibited during designated flight phases. The "hazardous command" protection is thus provided by MCC-H. The uplink GSTDN station also records the uplink command data and transmits a command history consisting of readback of commands received, including time tags with site command acceptance to the JSC POCC, in case of loss of signal (LOS) from the Orbiter.

If the command data is to be routed to the TDRSS ground station, MCC-H will accomplish all of the functions that the GSTDN station performed. For the TDRSS, MCC-H multiplexes the 2 Kbps Spacelab command data from the JSC POCC with Orbiter data and outputs the 72 Kbps or the 32 Kbps in the Orbiter uplink format. The TDRSS performs a throughput function by receiving the data stream over the NASCOM link and relaying it to the Orbiter. The TDRSS provides a command history such that MCC-H (and the JSC POCC) can determine the actual uplink data that was transmitted, with associated time.

The command links from remote POCC's are identical to those described in the prelaunch phase.

---

*Command validation is the bit-by-bit repeat of the command word duplicating the command stored in the Command Storage Buffer of the General Purpose Computer aboard the Orbiter. The command validation telemetry is demultiplexed from the Orbiter operational instrumentation (OI) data stream and transmitted to the JSC POCC in real time and in the same format and at the same rates as output from Spacelab. When the MCC-H confirms the command transmission, it then transmits a command confirmation message back to the JSC POCC. The POCC then transmits an execute command. All commands stored in the Orbiter's General Purpose Computer Command Buffer are transferred to the payload upon receipt of the execute command. Thus, Command validation indicates corrections of the command. Command verification, on the other hand, is the term used to indicate that the command has actually been sent.

PRECEDING PAGE BLANK NOT FILMED

ORIGINAL PAGE IS
OF POOR QUALITY

2.2.3.2.2 GSFC Payload Interface, Operational Phase (Figure 2.2-16)

Command data will be sent to the GSFC payload during the operational phase (Ascent and On-orbit) with the commands originating with the GSFC POCC or the remote POCC.

During the ascent phase, it is not anticipated that any commands except safing commands will be sent to the payload since the payload will be in a monitored-only-mode to ensure that it survives the launch environment and data saved for diagnostic purposes in the event an anomaly occurs.

When the Orbiter reaches final orbit, then on-orbit operations begin and the payload will be commanded by the GSFC POCC. During deployment the POCC will check out the command capability. The flow of commands from the POCC to the payload is shown in Figure 2.2-16.

Prior to deployment, RF communication will be established between the payload and the GSFC POCC via the TDRSS/GSTDN/NASCOM/MCC-H. Also prior to the extraction of the payload umbilical, a direct RF link will be established between the payload and the Orbiter.

Following deployment, the Orbiter translates to a specified distance from the payload and maintains an escort operating mode. It is during the Escort Mode that the GSFC POCC performs a payload checkout using POCC-originated commands.

Following successful deployment and payload checkout, normal payload operations begin with complete payload control from the GSFC POCC and with payload experiment data processing, orbit computation, attitude determinations, etc., accomplished via GSFC support facilities. Real-time commanding will be accomplished through the STDN/TDRSS.

2.2.3.2.3 JPL Payload Command Interface, Operational Phase

JPL Payload Command Interfaces are depicted in Figure 2.2-17 which illustrates the three operating modes:

1. Attached (Payload-IUS still physically attached to the Orbiter).
2. Detached (Payload-IUS detached from the Orbiter).
3. Free flight (Payload separated from the IUS).

FOLDOUT FRAME 1

FOLDOUT FRAME 2

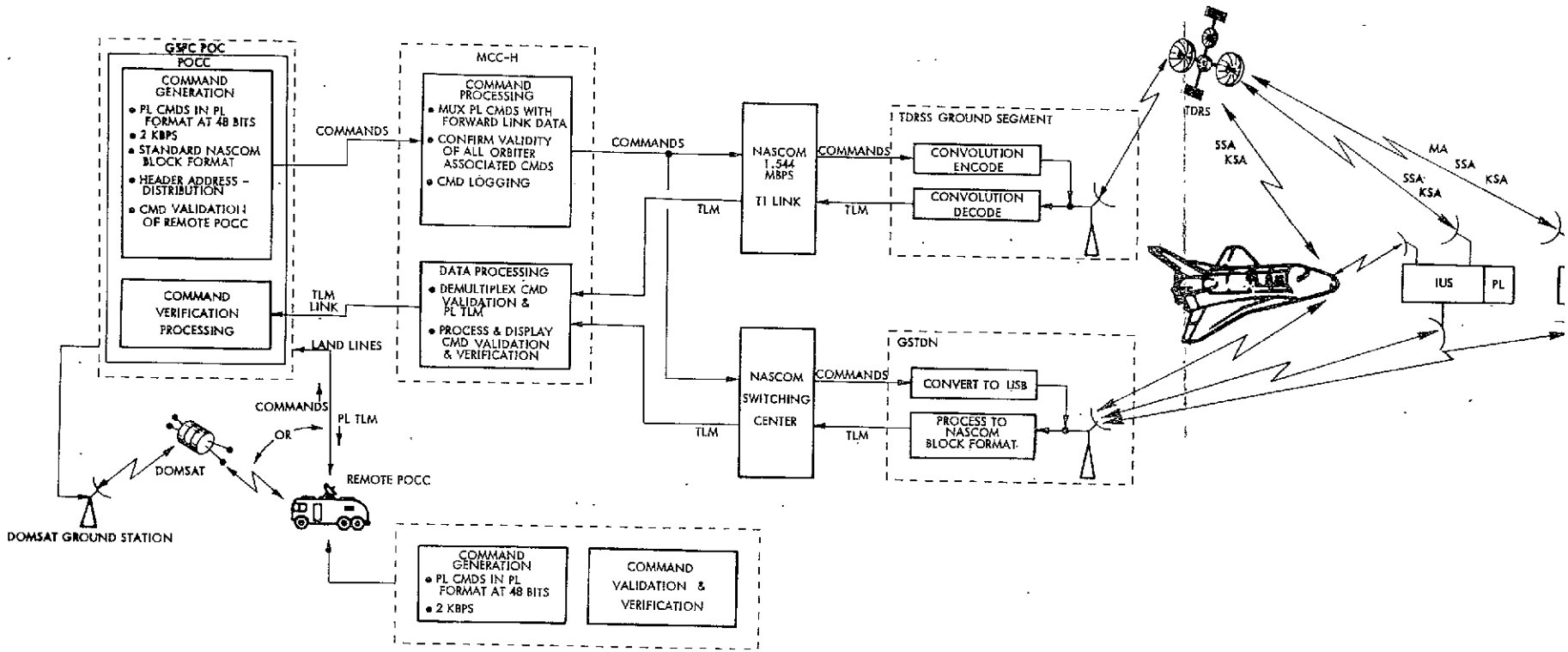

Figure 2.2-16. GSFC Payload Command Interface, Operationa Phase

FOLDOUT FRAME 1

FOLDOUT FRAME 2

PRECEDING PAGE BLANK NOT FILMED

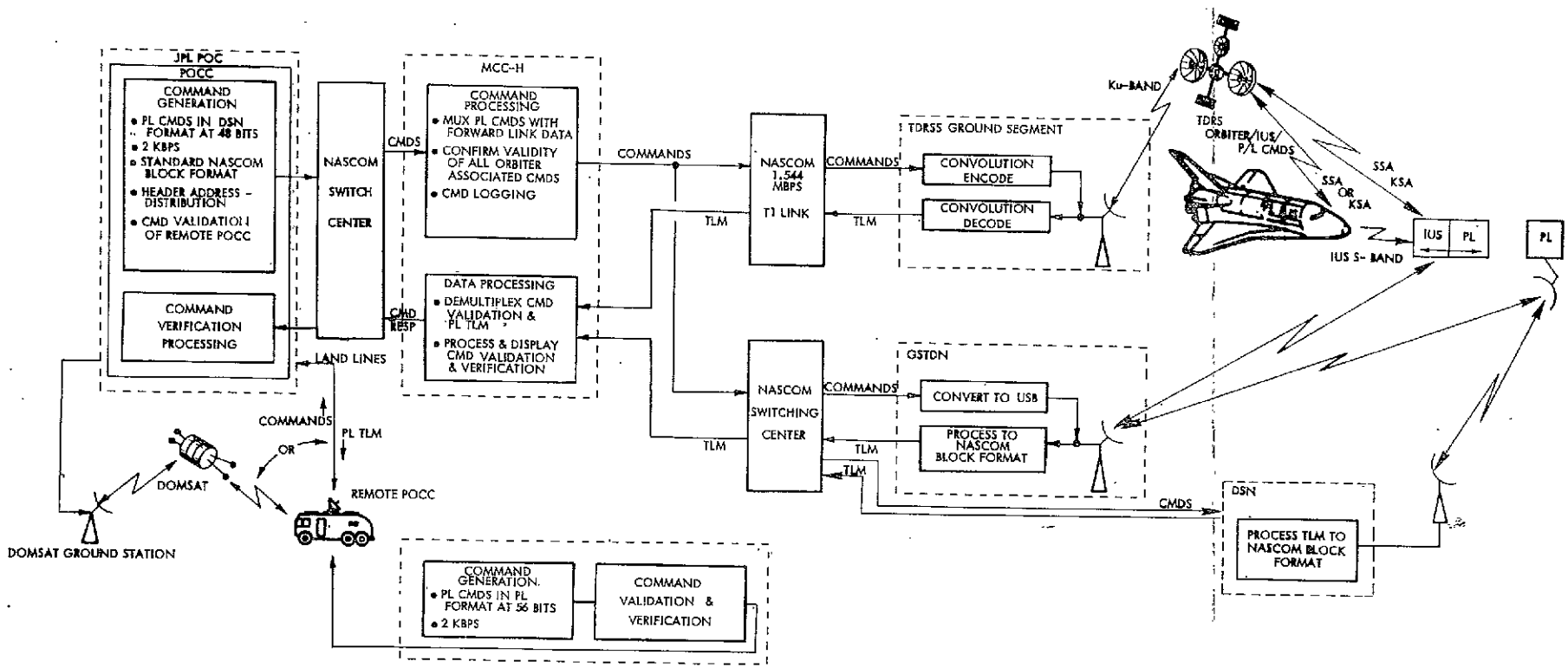

Figure 2.2-17. JPL Payload Command Interface, Operational Phase

In the "attached" operating mode, payload commands generated in the JPL POCC are transferred to the MCC-H via NASCOM where they are multiplexed with forward link data and the validity of all Orbiter-associated commands are confirmed. The confirmed commands are then transferred to the 1.544 Mbps NASCOM link to the TDRSS ground segment and via the Ku-band link to the TDRS. The TDRS communicates the Payload/IUS/Orbiter commands to the Orbiter via SSA or KSA transmission links.

Command verification is achieved by processing the demultiplexed telemetry data received from the Orbiter via the TDRS-NASCOM-MCC-H-NASCOM link.

In the "attached" operating mode, the Payload/IUS interfaces with the data system as follows:

1. JPL POCC initiated commands are transferred to the MCC-H via NASCOM and to the Payload-IUS via the NASCOM-TDRS in the "attached" operating mode.

2. JPL POCC initiated commands are transferred to the Orbiter as in the "attached" operating mode and then transferred to the Payload-IUS over an S-band link.

3. The alternate path routes the MCC-H processed commands via NASCOM and the GSTDN using a USB link to the Payload-IUS.

Verification of commands is satisfied by processing the telemetry received from the return links and as processed by the MCC-H to strip the payload telemetry from the Orbiter telemetry stream.

In the "Free Flight" operating mode, JPL POCC generated commands reach the payload via the JPL POCC-NASCOM-MCC-H-NASCOM-GSTDN path as described for the detached operating mode. In addition, command data is received directly via JPL POCC/NASCOM/DSN. Command verification is obtained by processing the directly received payload data (via the DSN-NASCOM return link).

2.2.3.2.4 DOD Payload Command Interface, Operational Phase (Figure 2.2-18)

Command data from the DOD POCC is transmitted via NASCOM to MCC-H for verification and validation. Validated commands are subsequently transmitted via NASCOM and GSTDN or TDRSS END SEGMENT to the Orbiter (Figure 2.2-18). The commands are stored in the command data buffer onboard the Orbiter and retransmitted over the return link via TDRSS or GSTDN and NASCOM to the

 PRECEDING PAGE BLANK NOT FILMED

FOLDOUT FRAME

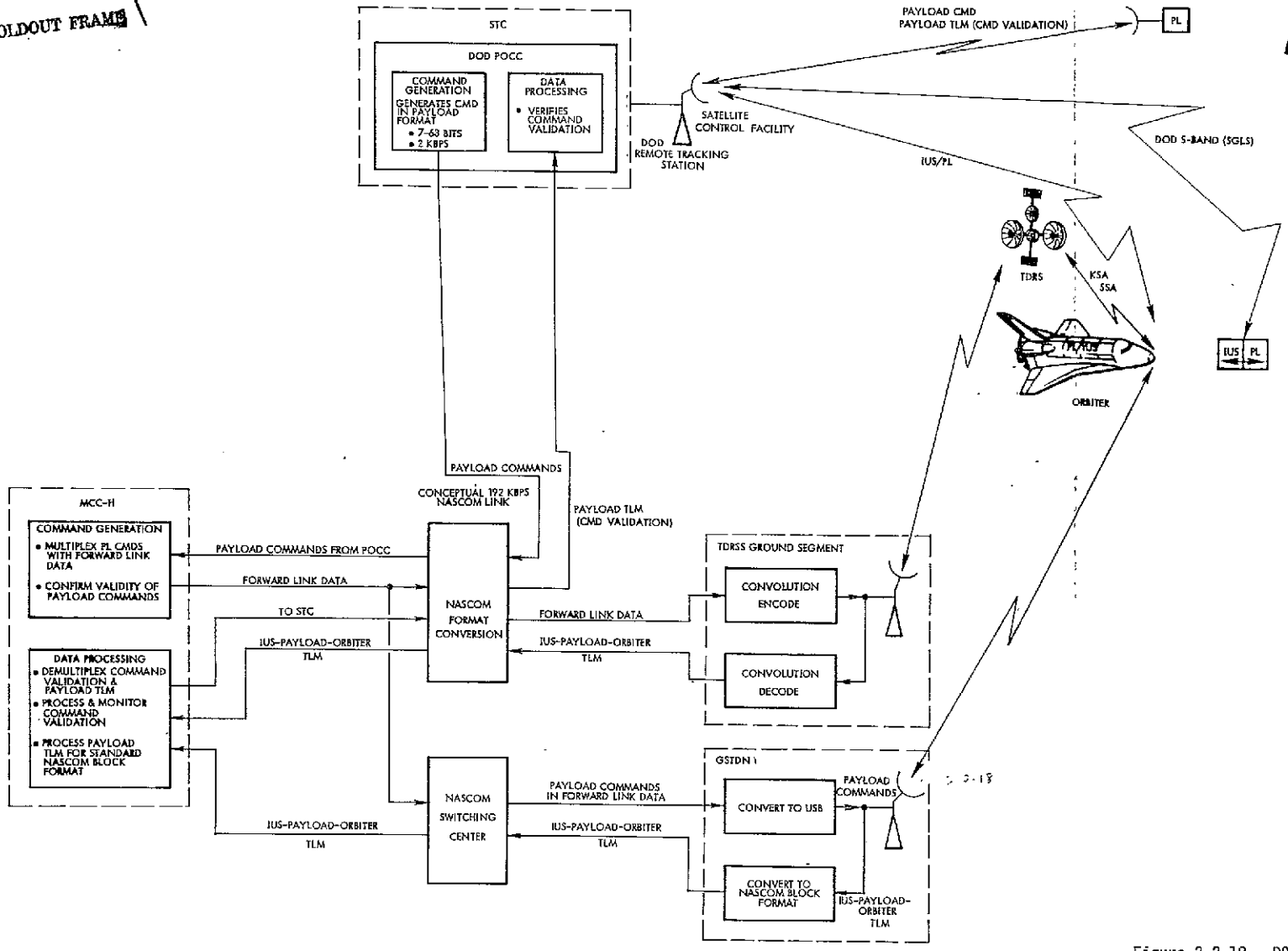

Figure 2.2-18. DOD Payload Command Interface, Operation Phase

PRECEDING PAGE BLANK NOT FILMED

MCC-H where the forward link command validation data is demultiplexed from telemetry data and forwarded via NASCOM to DOD for command validation. The command message onboard the Orbiter is subsequently enabled from the DOD POCC, and a command enable message is transmitted over the forward link to the Orbiter.

Safing commands from the Orbiter will be transferred to the payload via discrete hardwire signals and may originate either onboard the Orbiter or at the POCC/STC. All payload checkout commands will either be transmitted directly from the SCF (via SGLS) to the payload antenna or from the Orbiter via hardware with voice coordination to the STC. After the payload is deployed, DOD assumes full control of the payload operation, while NASA continues to maintain control of the Orbiter.

The primary link between MCC-H and the TDRSS Ground Station is a 1.544 Mbps line. Command data may also be transmitted via GSFC over a 1.544 Mbps primary line or a 224 Kbps backup line to the TDRSS Ground Station.

2.2.3.3 Health Telemetry Interfaces

2.2.3.3.1 JSC Payload Health Telemetry Interface, Operational Phase (Figure 2.2-19)

The Payload Health Telemetry data flow from the Spacelab pallet and/or manned module payloads is shown in Figure 2.2-19. Spacelab Health Telemetry data is transmitted either directly over GSTDN or TDRS and the TDRSS Ground Station via NASCOM to MCC-H. The telemetry data has been multiplexed with Orbiter telemetry onboard the Orbiter and is subsequently demultiplexed at MCC-H. The telemetry link from the Orbiter Payload Data Interleaver (PDI) is limited to 64 Kbps. STS Flight Operations at MCC-H will process the minimum standard Spacelab and payload housekeeping data received from the operational data stream as well as monitor Spacelab systems, contingency support and systems support for unattended operations. The demultiplexed Payload Health Telemetry data is also transmitted to the JSC POCC by MCC-H.

2.2.3.3.2 GSFC Payload Health Telemetry Interface, Operational Phase (Figure 2.2-20)

The flow diagram, Figure 2.2-20, depicts the flow of Payload Health Telemetry data from a GSFC Payload either in Free Flight (FF), attached to an IUS, or attached to the Orbiter, to the GSFC POCC.

PRECEDING PAGE BLANK NOT FILMED

PRECEDING PAGE BLANK NOT FILMED

FOLDOUT FRAME 2

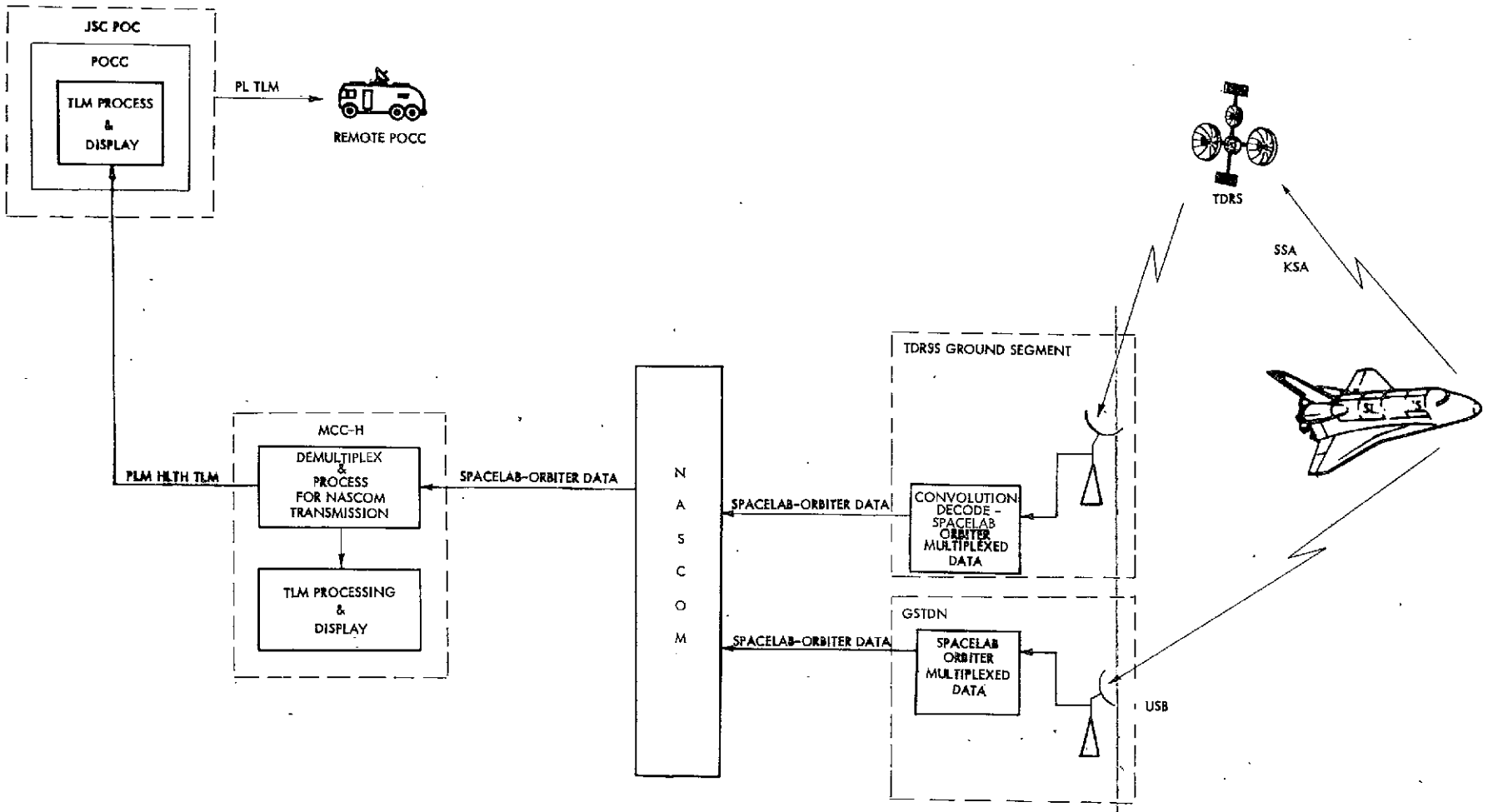

Figure 2.2-19. JSC Payload Health Telemetry Interface, Operational Phase

FOLDOUT FRAME 1

FOLDOUT FRAME 1

FOLDOUT FRAME 2

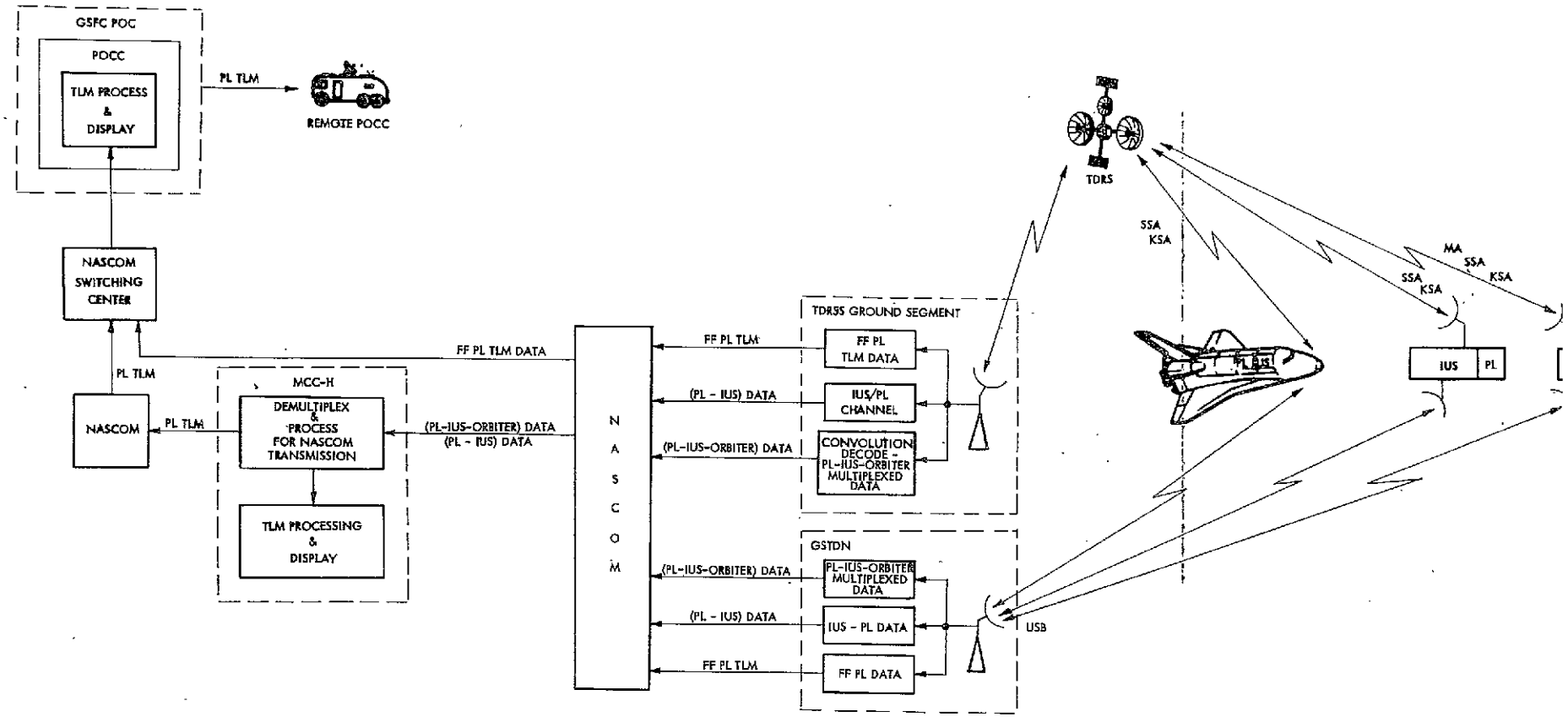

PRECEDING PAGE BLANK NOT FILMED

Figure 2.2-20. GSFC Payload Health Telemetry Interface, Operational Phase

PRECEDING PAGE BLANK NOT FILMED

When a payload without an IUS is attached to the Orbiter, the Payload Health Telemetry is multiplexed directly with the Orbiter Downlink data in the Orbiter Multiplexer Demultiplexer (MDM). However, when a payload is attached to an IUS aboard the Orbiter, the Payload Telemetry is first multiplexed with the IUS TLM which is then transferred to the Orbiter MDM and multiplexed with the Orbiter data, the sum total being PL-IUS-ORBITER data. This data is transmitted via SSA or KSA to the TDRSS or via Unified S-band (USB) to GSTDN and then transmitted via NASCOM to MCC-H where the payload data is demultiplexed and formatted for transmission via NASCOM to the GSFC POCC. MCC-H also processes and displays the Payload Telemetry for Payload Health Monitoring and performs command validation and verification.

When the IUS and attached payload are deployed from the Orbiter, the Payload Telemetry is multiplexed with the IUS Telemetry and transmitted via links similar to those used by the Orbiter data discussed above. The MCC-H processes, displays and retransmits this data in a similar manner.

In Free Flight (FF) the Payload Telemetry uses the Multiple Access (MA), S-Band Single Access (SSA), or Ku-Band Single Access (KSA) links to the TDRSS and uses the Unified S-Band (USB) link to the GSTDN. The FF telemetry data is distributed via the NASCOM network directly to the POCC, by-passing the MCC-H.

The Payload Health Telemetry is transmitted to the remote POCC from the GSFC POCC via convenient landlines. The bandwidth of this data does not necessitate the use of a DOMSAT.

2.2.3.3.3 JPL Payload Health Telemetry, Operational Phase (Figure 2.2-21)

The flow diagram, Figure 2.2-21, depicts a concept of the flow of JPL Payload Health Telemetry data from a JPL Payload either aboard an Inflight Orbiter, attached to an IUS or in Free Flight.

When the PL/IUS is aboard the Orbiter, the payload data is multiplexed with the IUS data which in turn is multiplexed with the Orbiter downlink data. This multiplexed data (PL-IUS-ORBITER) is transmitted from the Orbiter to either the TDRSS or GSTDN and distributed via NASCOM to the MCC-H where it is demultiplexed and the payload data is forwarded to the JPL POCC.

FOLDOUT FRAME

FOLDOUT FRAME 2

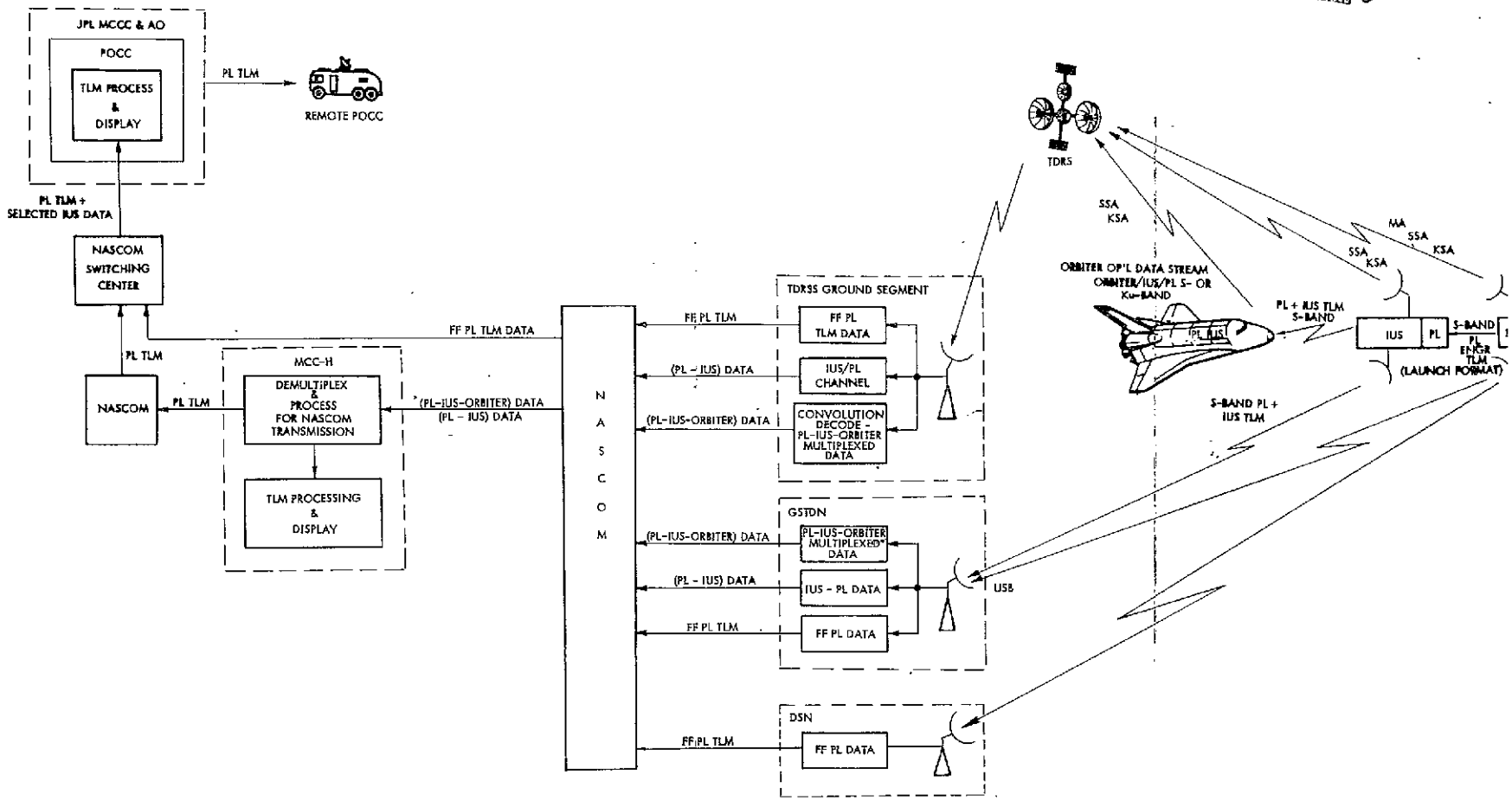

Figure 2.2-21. JPL Payload Healt
Telemetry Interfa
Operational Phase

PRECEDING PAGE BLANK NOT FILMED

When the IUS-PL is deployed from the Orbiter, the Payload Health data is still multiplexed with the IUS data (PL-IUS). This data is then transmitted direct to the TDRS or to the GSTDN via a Remote Tracking Station.

The TDRS link is only used immediately following deployment from the Orbiter because the IUS-PL will soon get out of range of the TDRS.

The payload in Free Flight will only communicate via the GSTDN directly back to the JPL POCC (bypassing the MCC-H). The presently anticipated bandwidth of the JPL Health Telemetry does not require the use of a DOMSAT by NASCOM.

2.2.3.3.4 DOD Payload Health Telemetry Interface, Operational Phase (Figure 2.2-22)

The IUS-satellite payload is hardwired to the Orbiter, with the satellite telemetry and commands being hardwired directly through the IUS to the Orbiter. There are up to 50 safety-critical parameters from the combined IUS-satellite configuration that are hardwired directly to the C and W system in the Orbiter. Up to 36 corresponding payload safing commands are hardwired from the Orbiter. General status monitoring telemetry data (possibly including the Caution and Warning) is formatted into a serial digital data signal and sent to the Orbiter for interleaving into the Orbiter-to-ground downlink at data rates from 250 bps to 64 Kbps (nominally 16 Kbps), Figure 2.2-22. Formatted and encrypted satellite telemetry data at rates up to 256 Kbps is forwarded by the IUS for relay by the Orbiter FM transmitter to the AFSCF RTS. The Orbiter communications with the ground uses either S-band or Ku-band links to the TDRS or S-band links to the GSTDN. Downlink data containing voice, payload telemetry, and Orbiter telemetry is sent to the MCC/JSC at 96 Kbps (low data rate) or 192 Kbps (high data rate). The Orbiter's FM S-band transmitter relays satellite data directly to the Air Force Satellite Control Facility (AFSCF) Remote Tracking Station (RTS) when line-of-sight conditions exist.

There are at least two voice channels and a data channel on the MCC/JSC to POCC/STC communications link. One voice channel is the party line circuit among the Orbiter, MCC, and POCC, and the other is a dedicated voice channel between the POCC and DOD Payload Officer at the MCC. The return link data channel carries the payload housekeeping data and payload related Orbiter data from the Orbiter telemetry.

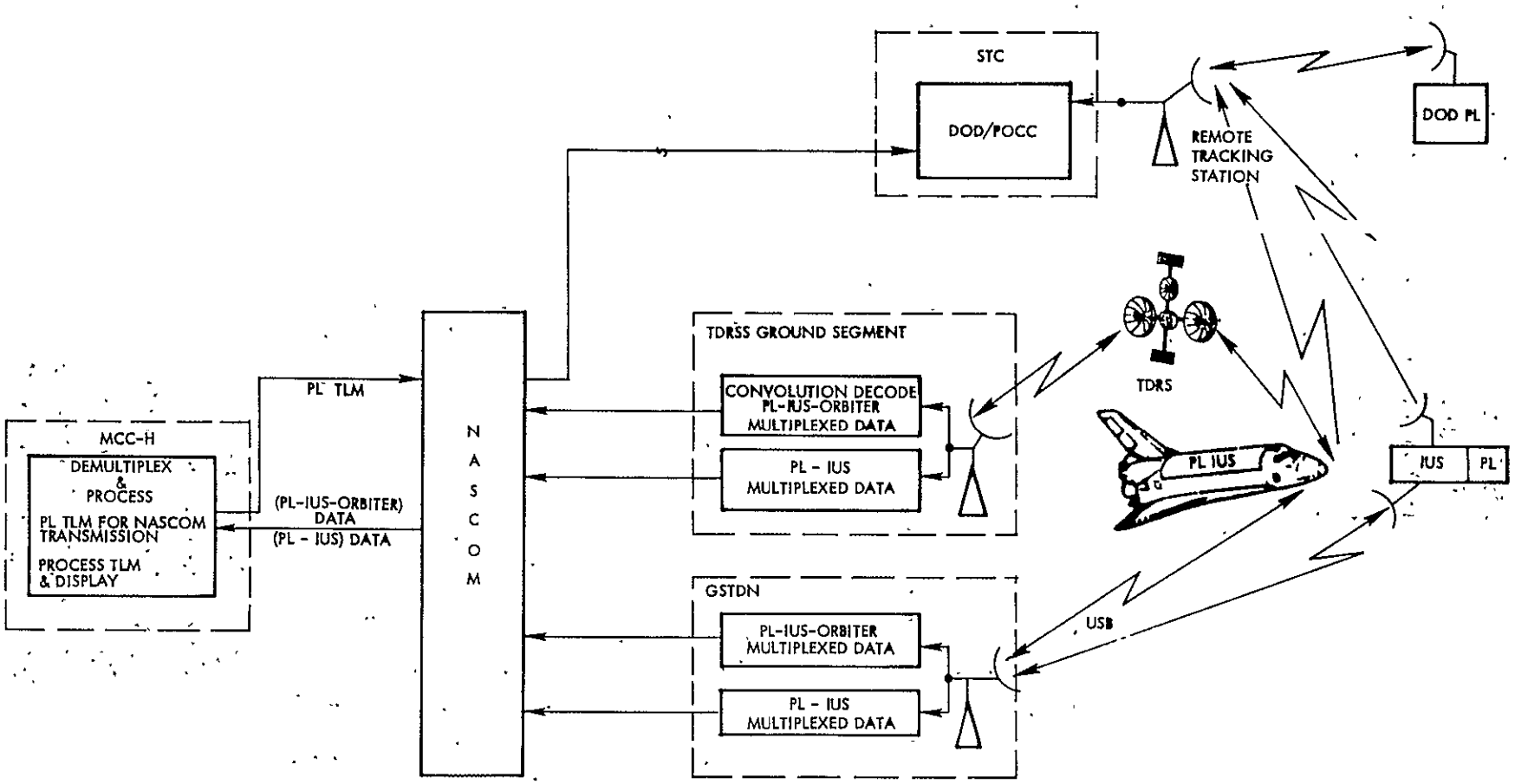

Figure 2.2-22. DOD Payload Health Telemetry Interface, Operational Phase

The system expanded from Phase 1B to accommodate Shuttle launches from VAFB still comprises principally the Phase 1A elements. However, with VAFB Initial Operating Capability (IOC), additional communications segments become operative. These include:

a. VAFB-to-MCC Communications. Mission/Flight coordination is provided for VAFB launch and landing operations. Voice communication, system status, and Orbiter data updates are transferred between the LCC and MCC.

b. VAFB-to-AFSCF Communications. DOD payload status telemetry and commands are transferred between the POCC and the Orbiter-installed payload. Voice coordination is maintained among launch support personnel at VAFB's Payload Processing Facility, VTS, LCC, and the POCC to provide overall payload mission support.

2.2.3.4 Science Telemetry Interfaces

2.2.3.4.1 JSC Payload Science Telemetry Interface, Operational Phase (Figure 2.2-23)

The flow diagram, Figure 2.2-23, depicts a concept of the flow of Payload Science Telemetry data from a JSC payload located either aboard an inflight Orbiter, attached to an IUS, or in Free Flight.

The flow and operational interfaces are identical to those described in Section 2.2.3.3.3 of this document.

Medium- and high-rate Payload Science Telemetry is transmitted either via GSTDN or TDRSS via NASCOM to MCC-H (Figure 2.2-23). The multiplexed Spacelab, payload and Orbiter data may either be multiplexed with tracking data at the TDRSS Ground Station for transmission over a wideband T1 channel to MCC-H or transmitted directly over a DOMSAT channel from the remote site to the JSC POCC. The DOMSAT link may also be used to transmit the Payload Science Telemetry to GSFC for near real-time data processing. The processed data is subsequently transmitted over a NASCOM link to the JSC POCC. The TDRS-NASCOM-MCC-H link is used for data rates 1.544 Mbps or less while the DOMSAT link is used for data rates up to 50 Mbps.

FOLDOUT FRAME 1

FOLDOUT FRAME 2

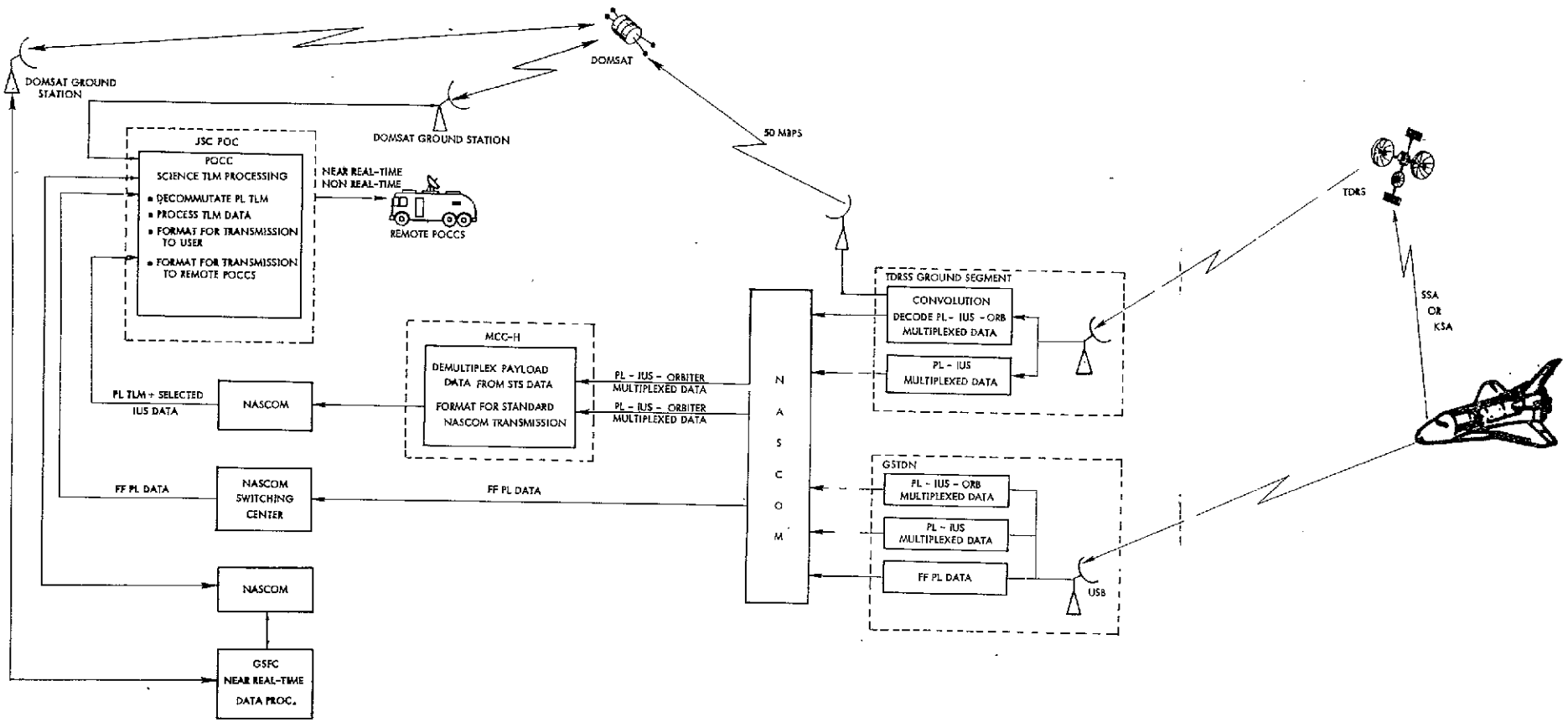

Figure 2.2-23. JSC Payload Science Telemetry Interface, Operational Phase

PRECEDING PAGE BLANK NOT FILMED

PRECEDING PAGE BLANK NOT FILMED

2.2.3.4.2 GSFC Payload Science Telemetry Interface, Operational Phase (Figure 2.2-24)

During the operational phase, GSFC Payload Science Telemetry is received at the GSFC POCC in the same manner as Payload Health Telemetry as described in Section 2.2.3.3.1 of this report with some noted exceptions. These exceptions are:

1. While the payload is aboard the IUS/Orbiter, there are two communication paths to the POCC which are also used with the GSFC Payload Health Telemetry:

   a. TDRSS-NASCOM-MCC-H-POCC

   b. GSTDN-NASCOM-POCC

   In addition to these two paths, a third is provided by TDRSS re-routing the Science Telemetry data to the POCC via the DOMSAT link.

2. When the payload has been separated from the IUS-Orbiter, then the Payload Science Telemetry has only one path to the POCC. That path is the GSTDN-NASCOM directly to the POCC.

This concept is depicted in Figure 2.2-24.

2.2.3.4.3 JPL Payload Science Telemetry Interface, Operational Phase (Figure 2.2-25)

The flow diagram, Figure 2.2-25, depicts the flow of Payload Science Telemetry data from the JPL payload to the associated JPL POCC. The data flow includes those interfaces while the JPL payload is either in Free Flight, attached to an IUS, or attached to an Orbiter.

The flow shown is identical to the JPL Payload Health Telemetry described in Section 2.2.3.3.3. Reference is also made to Section 2.2.3.2.3 JPL payload command interface for additional related information.

2.2.3.4.4 DOD Payload Experiment Telemetry Data Flow, Operational Phase (Figure 2.2-26)

All payload experiment data is transmitted directly, encrypted at 256 Kbps, from IUS/payload and payload to DOD SCF Remote Tracking Stations and DOD POCC (Figure 2.2-26).

FOLDOUT FRAME 1

FOLDOUT FRAME 2

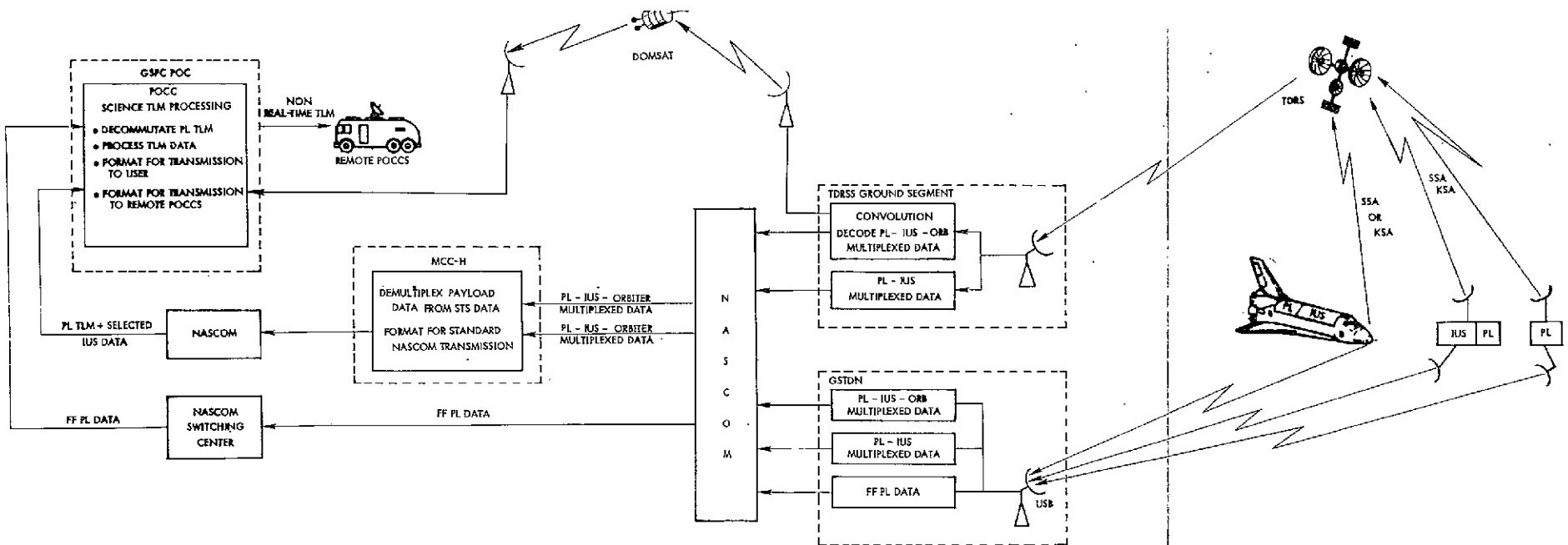

Figure 2.2-24. GSFC Payload Science Telemetry Interface, Operational Phase

PRECEDING PAGE BLANK NOT FILMED

FOLDOUT FRAME 1

FOLDOUT FRAME 2

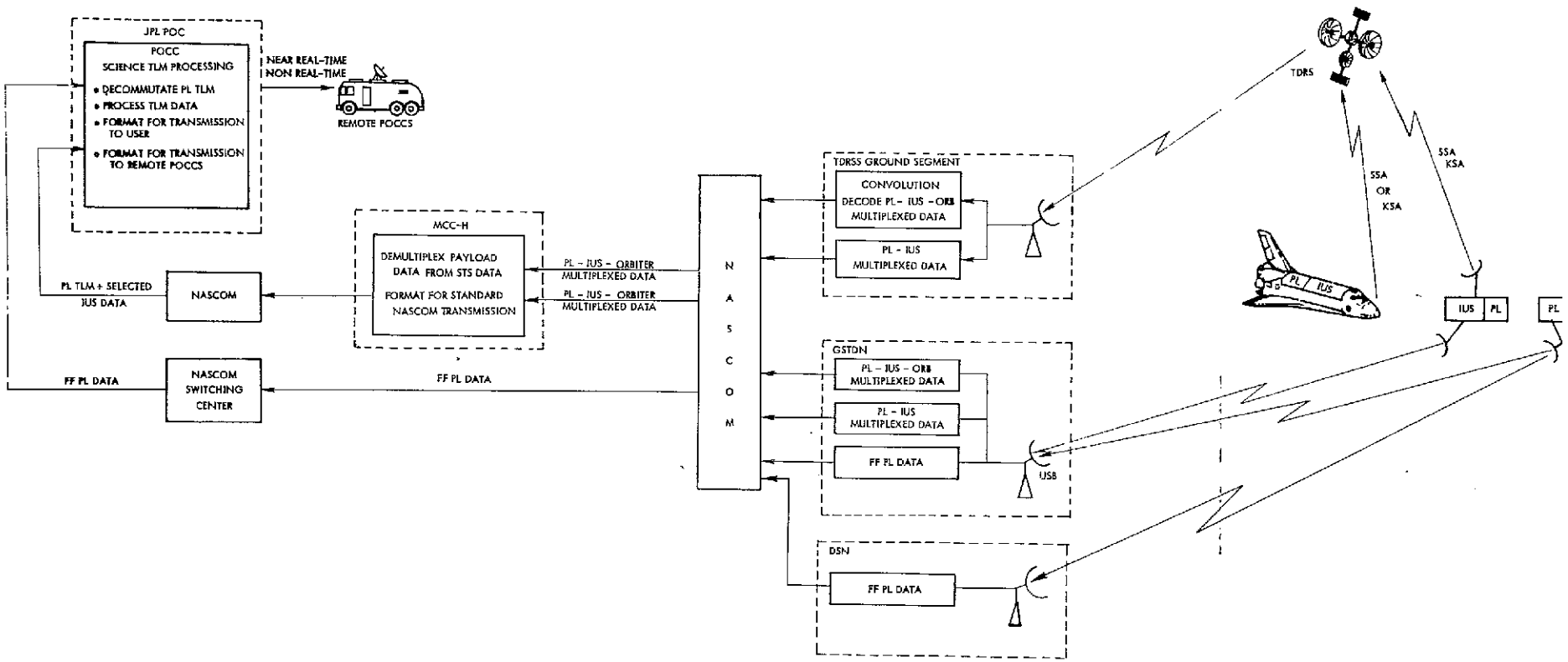

Figure 2.2-25. JPL Payload Science Telemetry Interface, Operational Phase

PRECEDING PAGE BLANK NOT FILMED

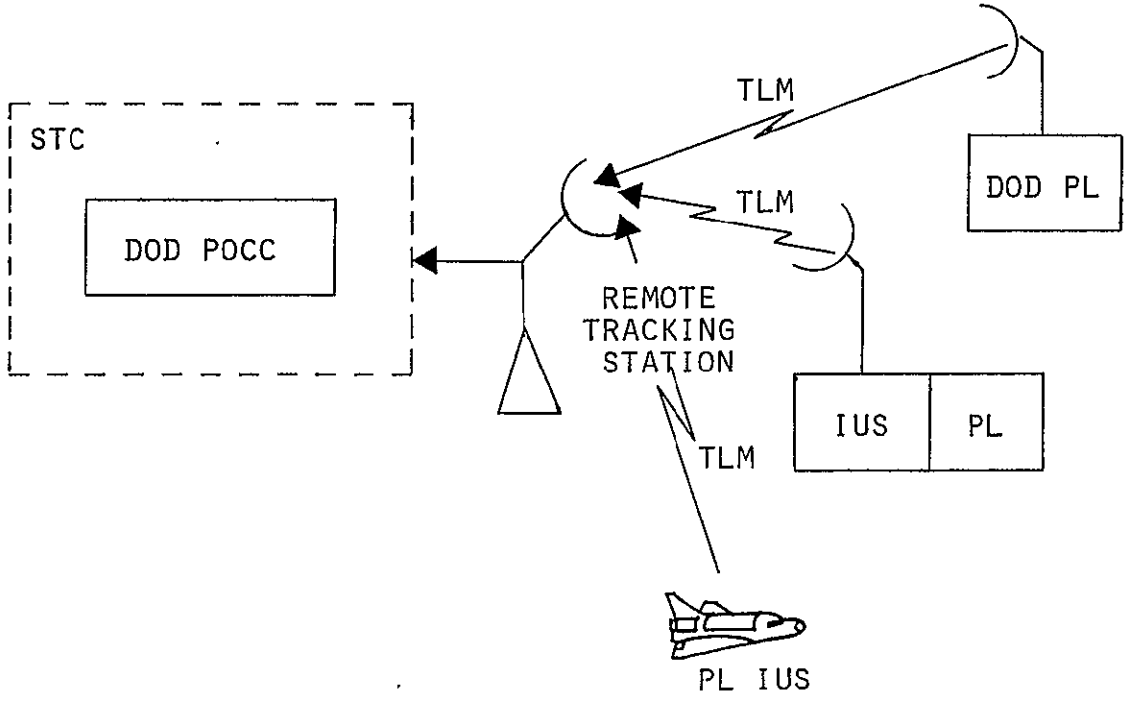

Figure 2.2-26. DOD Payload Experiment Telemetry Data Flow, Operational Phase

PRECEDING PAGE BLANK NOT FILMED

2.2.4 Subtask 2B Conclusions and Recommendations

The following conclusions and recommendations have been formulated from the performance of Subtask 2B:

1. Provide end-to-end command verification link from the Orbiter to the POCC. This should permit standardization of data handling throughout the data system.

2. Fully utilize the TDRSS and GSTDN during prelaunch checkout to verify end-to-end checkout and to assure end-to-end compatibility.

3. Standardize the GSTDN and TDRSS for command data handling transparency. This standardization should serve to eliminate the costly changes which must be implemented at the several link junctions for each new payload or payload change.

4. Provide for the demultiplexing of the composite IUS-payload data stream at MCC-H. This will minimize the number of Orbiter interfaces and will serve to standardize the Orbiter interfaces to the payload and to MCC. Each payload user will receive only the data which concerns that user's specific payload.

The above conclusions and recommendations may or may not be in consonance with prior study results or NASA proposed methods, but they represent TRW's findings in light of assumptions which were made to supplement NASA- and DOD-supplied information used on Subtask 2B.

PRECEDING PAGE BLANK NOT FILMED

PRECEDING PAGE BLANK NOT FILMED

2.2.5 Subtask 2B Summary

In compliance with Study Subtask 2B, this study report describes the POCC-payload interface for the several types of payloads (payload organizations JSC, GSFC, JPL, and DOD) in terms of the prelaunch and operational phases. Communications flow diagrams for the individual command and telemetry (Health, Science) links are detailed herein. Furthermore, each flow diagram is described to identify the several interfaces which will exist between the POCC and the respective payload.

Formulated conclusions and recommendations based on a preliminary assessment of the communication flows by TRW are presented within the study guidelines and may not be in complete accord with the payload organizations, JSC, nor KSC. Briefly stated, these conclusions and recommendations are:

a. Provide end-to-end command verification link, Orbiter to POCC's.

b. Use TDRSS during prelaunch checkout.

c. Standardize use of GSTDN and TDRSS for command data handling transparency.

d. VAFB interface with NASCOM be provided by link to TDRSS NASCOM terminal.

e. MCC provide for demultiplexing IUS and payload data.

It was shown that with the exception of the DOD payloads, nearly all other payloads utilized the same communications paths, (i.e., either the T = 0 umbilical MLP-MILA GSTDN-TDRSS-NASCOM-MCC-H-NASCOM paths or both in communicating commands and telemetry between the payload and the POCC.

Some of the noted exceptions are:

a. JPL payloads also utilized the MIL-71 which is similar to DSN stations for command and telemetry communications during prelaunch and the DSN for operational.

b. JSC and JPL payloads Health telemetry was provided to the JSC POCC and JPL POCC respectively via Bent Pipe from the TDRSS Ground Segment to the POCC.

c. DOMSAT was shown as providing communication via the TDRSS ground directly to the POCC for JSC and GSFC payloads.

d. DOD payload prelaunch communications exception were identified as two additional links, (1) from the RVCF (Remote Vehicle Check-out Facility to the New Hampshire station to STC and (2) from the PPF directly to the STC.

e. DOD payload operational communications are shown as having direct communications with Orbiter and IUS-PL, in addition to the TDRSS and GSTDN paths.

APPENDIX A

ACRONYMS AND ABBREVIATIONS

ACDS	Attitude Control and Determination Subsystem
AEO	Automated Earth Orbit
AF	Air Force
AFSCF	Air Force Satellite Control Facility
AMPS	Atmospheric, Magnetospheric, Plasmas-in-Space
AO	Announcement of (Flight) Opportunity
ATL	Advanced Technology Laboratory
BESS	Biomedical Experiment Satellite System
BPS	Bits per Second
C and W	Caution and Warning
CMD	Command
CPU	Central Processing Unit
DOD	Department of Defense
DOMSAT	Domestic Satellite
DP	Data Processing
DSN	Deep Space Network
EMI	Electro-Mechanical Interference
EOS	Earth Observation Satellite
FF	Free Flight
FFTO	Freeflyer Teleoperator
FM	Frequency Modulated
FSS	Flight Support System
GEO	Geosynchronous Earth Orbit
GND	Ground
GSE	Ground Support Equipment
GSFC	Goddard Space Flight Center

GSTDN	Ground Portion of Space Flight Tracking and Data Network (STDN Ground Stations)
GTE	Ground Test Equipment
GTE	Ground Time Elapse
HEA	High Energy Astrophysics
HEAO	High Energy Astrophysics Observatory
ID	Identification
I/O	Input/Output
IOC	Initial Operating Capability
IOM	Integrated Operations Manager
IUS	Interim Upper Stage
IVE	Interface Verification Equipment
JPL	Jet Propulsion Laboratory
JSC	Lyndon B. Johnson Space Center
KBPS	Kilobits per Second
KIPS	Thousand Instructions per Second
KHZ	Kilo Hertz
KSA	Ku-Band Single Access
KSC	John F. Kennedy Space Cent
LAGEOS	Laser Geodynamic Satellite
LCC	Launch Control Center
LEO	Low Earth Orbit
LIDAR	Light Detection and Rangin
LOS	Loss of Signal
LPS	Launch Processing System
LS	Life Science
MA	Multiple Access
MBPS	Megabits per Second
MCC	Mission Control Center

MCCC	Mission Control and Computing Center (JPL)
MCC-H	Mission Control Center-Houston
MDM	Multiplexer-Demultiplexer
MEM	Module Exchange Mechanism
MIL-71	Merritt Island, Florida (No. 71)
MILA	Merritt Island Launch Area (A STDN Ground Station)
MLP	Mobile Launcher Platform
MMI	Man-Machine Interface
NASA	National Aeronautics and Space Administration
NASCOM	NASA World Wide Communications Network
NOCC	Network Operation Control Center
OFT	Orbital Flight Test
OI	Operational Instrumentation
OPF	Orbiter Processing Facility
PC	Payload Coordinator
PCR	Payload Changeout Room
PCS	Payload Checkout Stand
PDI	Payload Data Interleaver
PGS	Payload Ground Station
PL	Payload
POC	Payload Operations Center
POCC	Payload Operations Control Center
PPF	Payload Processing Facility
PS	Payload Station
PSC	Payload Station Console
RF	Remote Frequency
RFI	Radio Frequency Interference
RTS	Remote Tracking Station
RVCF	Remote Vehicle Checkout Facility

SAEF	Sterilization, Assembly, and Encapsulation Facility
SCF	Satellite Control Facility
SEOPS	Standard Earth Observations Package for Shuttle
SGLS	Space-Ground Link Subsystem
SI	Solar Instrument
SL	Spacelab
SO	Solar Physics
SPMS	Special Purpose Manipulator System
SPOCC	Standard Payload Operations Control Center
SSA	S-Band Single Access
SSUS	Spin Stabilized Upper Stage
ST	Space Telescope
STC	Satellite Test Center (Sunnyvale/DOD)
STD	Standard
STDN	Space Flight Tracking and Data Network
STP	Space Test Program (Classified DOD Payload)
STS	Space Transportation System
TDRS	Tracking Data Relay Satellite
TDRSS	Tracking Data Relay Satellite System
TLM	Telemetry
USB	Unified S-Band
UV	Ultraviolet
VAFB	Vandenberg Air Force Base
VTS	Viewfinder Tracking System

APPENDIX B

REFERENCES AND TECHNICAL CONTACTS

STS PAYLOADS MISSION CONTROL STUDY
Continuation Phase A-1, April 1976
TRW Systems

DEEP SPACE PAYLOAD/SPACE TRANSPORTATION SYSTEM,
Operation Concepts and Requirements, Final Report, 15 April 1976
JPL Report 760-140

STS/DEEP SPACE PAYLOAD OPERATION STUDY-PHASE III
Interim Report, August 1976
JPL Report 760-152

DEEP SPACE/SPACE TRANSPORTATION SYSTEM
Operations Concepts and Requirements, February 1976
JPL Report 760-139

COMPARISON OF DEEP SPACE PAYLOADS AND STS OPERATIONS CONCEPTS AND REQUIREMENTS,
August 1976
JPL Report 760-151

PAYLOAD OPERATIONS CONCEPT AND REQUIREMENTS FOR EARTH-ORBITING AUTOMATED PAYLOADS LAUNCHED BY SPACE TRANSPORTATION SYSTEM
February 1976
Goddard Space Flight Center

SPACELAB COST REDUCTION ALTERNATIVES STUDY
Executive Summary, Final Report, 1 February 1976
TRW Document 26904-6002-TU-00
NASA Document NAS9-14484, Exhibit B

STS/PLANETARY SPACECRAFT MISSION OPERATIONS STUDY, PHASE II
Final Presentation, 29 January 1976
JPL Document 760-137

DOD SPACE TRANSPORTATION SYSTEM (STS COMMAND AND CONTROL DATA SYSTEM STUDY SUMMARY)
Volume I, 30 October 1974
Philco Ford Document PHO-TR591
SAMSO Document TR75-90

STS PAYLOAD SERVICES, TECHNICAL PRESENTATION
December 1975
Document No. JSC-10755

TECHNICAL INFORMATION SUMMARY
12 July 1974
JPL Document NEA-74-48

ORBITAL OPERATIONS FOR LARGE AUTOMATED SATELLITES
NASA Technical Memorandum (NASA TM X-64847)
George C. Marshall Space Flight Center, MSFC, Alabama,
May 1974

SPACE SHUTTLE SYSTEM - PAYLOAD ACCOMMODATION LEVEL II
Program Definition and Requirements Volume XIV, November 1975
Document No. JSC 07700

SPACELAB OPERATIONS AT THE SHUTTLE LAUNCH SITE
Final Detailed Technical Report, December 1975
Document No. NAS10-8800

TECHNICAL CONTACTS

DOD

TRW DOD Study Personnel

GSFC

Dale Fahnestock
Sam Osler

JPL

Phillip Barnett
Doug Hess

JSC

Bill Anderson
Kim Anson
John Cox
Clay Hicks
Merlin Merritt

KSC

TRW Spacelab Study Personnel