JSC-13048

(NASA-TM-74938) DESCRIPTION OF A COMPUTER PROGRAM WRITTEN FOR APPROACH AND APPROACH AND LANDING TEST POST FLIGHT DATA EXTRACTION OF PROXIMITY SEPARATION AERODYNAMIC COEFFICIENTS AND AERODYNAMIC DATA BASE

N77-31238

HC A04/MF A01

Unclas

G3/16 47395

ENGINEERING ANALYSIS DIVISION INTERNAL NOTE

DESCRIPTION OF A COMPUTER PROGRAM WRITTEN FOR APPROACH AND LANDING TEST POST FLIGHT DATA EXTRACTION OF PROXIMITY SEPARATION AERODYNAMIC COEFFICIENTS AND AERODYNAMIC DATA BASE VERIFICATION

SEP 1977
RECEIVED
NASA STI FACILITY

National Aeronautics and Space Administration

LYNDON B. JOHNSON SPACE CENTER

Houston, Texas

August 9, 1977

JSC-13048

ENGINEERING ANALYSIS DIVISION INTERNAL NOTE

DESCRIPTION OF A COMPUTER PROGRAM WRITTEN FOR APPROACH AND LANDING TEST POST FLIGHT DATA EXTRACTION OF PROXIMITY SEPARATION AERODYNAMIC COEFFICIENTS AND AERODYNAMIC DATA BASE VERIFICATION

PREPARED BY

David J. Homan

APPROVED BY

Lovick O. Hayman
Chief, Aerodynamic Branch

Bruce G. Jackson
Chief, Engineering Analysis Division

NATIONAL AERONAUTICS AND SPACE ADMINISTRATION
LYNDON B. JOHNSON SPACE CENTER
HOUSTON, TEXAS 77058
August 9, 1977

ACKNOWLEDGEMENTS

Major contributions to making GRACIE functional, as well as operational, were made by the following gentlemen:

Mark Craig - Johnson Space Center

George Glenn - McDonnell Douglas-Houston

Al Carter - Dryden Flight Research Center

Don Black - Dryden Flight Research Center

CONTENTS

	Page
Summary	1
Introduction	1
Symbols	2
Subscripts	4
Program Description and Assumptions	4
Equations of Motion	5
Mated Vehicle Aerodynamic Coefficients	11
Carrier Aerodynamic Coefficients Proximity	13
Orbiter Aerodynamic Coefficients Proximity	14
Aerodynamic Uncertainties	16
Predictions	22
Program Deck Set-up	22
Appendix A - Tab Data	26
Appendix B - Plots	31

FIGURES

Figure		Page
1	Orbiter attach struts	1
2	Vehicle coordinate system	5
3	Orbiter attach point geometry	8
4	Orbiter attach point moment arms	9
5	Relative c.g. locations	10

REFERENCES

1. Rockwell/Space Division: "Orbiter/747 Carrier Separation Aerodynamic Data Book - SDM Baseline", SD75-SH-0033C, November 1976.

2. Rockwell/Space Division: "Aerodynamic Design Data Book, Orbiter Vehicle 101", Volume 4, SD72-SH-0060, October 1976.

SUMMARY

This report presents a description of a computer program written to calculate the proximity aerodynamic force and moment coefficients of the Orbiter/Shuttle Carrier Aircraft (SCA) vehicles based on flight instrumentation.

The Ground Reduced Aerodynamic Coefficients and Instrumentation Errors (GRACIE) program was developed as a tool to aid in flight test verification of the Orbiter/SCA separation aerodynamic data base. The program calculates the force and moment coefficients of each vehicle in proximity to the other, using the load measurement system (LMS) data, the flight instrumentation data (α, β, body rates, accelerations, etc.), and the vehicle mass properties. The uncertainty in each coefficient is determined, based on the quoted instrumentation accuracies. A subroutine, provided by McDonnell Douglas - Houston, manipulates the "Orbiter/747 Carrier Separation Aerodynamic Data Book" (reference 1) to calculate a comparable set of predicted coefficients for comparison to the calculated flight test data.

INTRODUCTION

In the Approach and Landing Test (ALT) phase of the shuttle program, one of the major problems to be considered is the separation of the Orbiter from the SCA. During mated flight, and for the first 3 sec after separation, the aerodynamics of each vehicle are influenced by the presence of the other vehicle. From past programs, it has been shown that such proximity effects are predicted with very little confidence from wind tunnel testing. Therefore, good flight test data are required to verify the adequacy of predicted separation windows and vehicle trajectories. The SCA is equipped with typical flight test instrumentation to record its absolute motion during flight. Load cells to measure the relative forces between the Orbiter and SCA are located on each of the three attach struts holding the Orbiter to the SCA during mated flight (fig. 1). Once the absolute motion of the SCA center of gravity

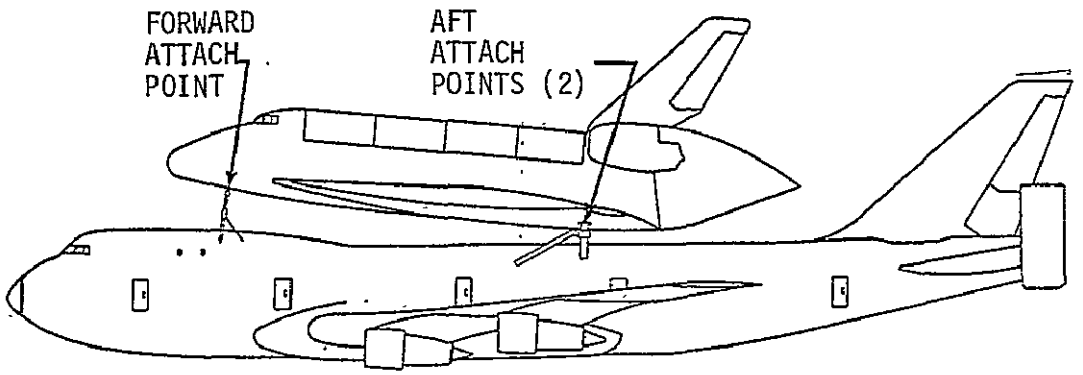

Figure 1. - Orbiter attach struts

(measured body attitudes, rates, and accelerations) and the externally applied forces (attach forces and SCA engine thrust) are known, the aerodynamic forces and moments of each vehicle can be determined by the relationships described in the following sections.

SYMBOLS

[A] Transformation matrix to change from SCA body axis to orbiter body axis coordinate system, $\begin{bmatrix} \cos i_o & 0 & -\sin i_o \\ 0 & 1 & 0 \\ \sin i_o & 0 & \cos i_o \end{bmatrix}$

C Vehicle aerodynamic coefficients

F Vehicle forces

[G] Transformation matrix to change from body axis to stability axis, $\begin{bmatrix} -\cos \alpha_o & 0 & -\sin \alpha_o \\ 0 & 1 & 0 \\ \sin \alpha_o & 0 & \cos \alpha_o \end{bmatrix}$

[I] Vehicle inertia matrix, $\begin{bmatrix} I_{xx} & 0 & -I_{xz} \\ 0 & I_{yy} & 0 \\ -I_{xz} & 0 & I_{zz} \end{bmatrix}$, slug-ft^2

i_o Orbiter incidence angle, deg

L Attach strut forces as measured by the load measurement system, lb

ℓ Vehicle reference length used for calculating vehicle moment coefficients, ft

M Vehicle moments

m Vehicle mass, slugs

N_x, N_y, N_z Linear acceleration at vehicle center of gravity, g

p Vehicle roll rate, deg/sec

$\dot{p}$ Vehicle roll acceleration, deg/sec^2

q	Vehicle pitch rate, deg/sec
$\bar{q}$	Dynamic pressure, lb/ft^2
$\dot{q}$	Vehicle pitch acceleration, deg/sec^2
$\mathbf{R}$	Vehicle position vector
r	Vehicle yaw rate, deg/sec
$\dot{r}$	Vehicle yaw acceleration, deg/sec^2
S	Vehicle reference area, ft^2
$\mathbf{T}$	SCA thrust, lb
V	Velocity, ft/sec
W	Vehicle weight, lb
α	Vehicle angle of attack, deg
β	Vehicle angle of sideslip, deg
γ	Vehicle flight path angle, deg
$\delta_{a_{I/O}}$	SCA aileron (inboard/outboard) position, deg
δ_{c_w}	SCA control wheel position, deg
$\delta_{e_{I/O}}$	SCA elevator (inboard/outboard) position, deg
$\delta_{r_{U/L}}$	SCA rudder (upper/lower) position, deg
δ_s	SCA stabilizer position, deg
δ_{SP}	SCA spoiler panel (outboard/middle/inboard) position, deg
δ_{a_o}	Orbiter aileron position, deg
$\delta_{e_{o_{L/R}}}$	Orbiter elevon (left/right) position, deg
δ_{r_o}	Orbiter rudder position, deg

ΔN_x, ΔN_y, ΔN_z	Relative load factors, g
θ	Vehicle pitch angle, deg
$\ddot{\theta}$	Orbiter instantaneous pitch acceleration, deg/sec^2
λ	Tilt angle of forward strut
$\boldsymbol{\rho}$	C.G. relative position vector (Δx, Δy, Δz), ft
ρ	C.G. to attach strut moment arm
ϕ	Vehicle roll angle, deg
ψ	Vehicle yaw angle, deg
$\boldsymbol{\omega}$	Vehicle angular velocity vector - p,q,r
$\dot{\boldsymbol{\omega}}$	Vehicle angular acceleration vector - $\dot{p}$,$\dot{q}$,$\dot{r}$

SUBSCRIPTS

c	SCA vehicle
F	Forward
L	Left
M	Mated vehicle
O	Orbiter vehicle
R	Right

PROGRAM DESCRIPTION AND ASSUMPTIONS

GRACIE is a program that uses flight test data to determine aerodynamic coefficients and their corresponding uncertainties for comparison with wind tunnel predicted values. The program manipulates LMS forces, SCA body motions, vehicle configurations, and vehicle mass properties to output tabulated and plotted time histories of Orbiter proximity, SCA proximity, and mated vehicle aerodynamic force and moment coefficients, as well as, relative normal load factor (ΔN_z) and Orbiter instantaneous pitch acceleration ($\ddot{\theta}_0$). The LMS data, the SCA body motion data, and the vehicle configuration are obtained from a ground recorded telemetry data tape to which all instrumentation calibrations have been applied. The vehicle mass properties and the SCA thrust data time

histories are input through subroutines, since they require post flight calculations and are not recorded on the data tape.

The program performs three basic operations utilizing the flight test data. The equations of motion and the aerodynamic uncertainty calculations are made using data retrieved from flight test instrumentation, while the predicted values of the coefficients are determined using the algorithms and data presented in reference 1. The following sections describe these operations.

Equations of Motion

As a basis for this evaluation, the mated vehicle is assumed to be a rigid body in motion with respect to a fixed coordinate system XYZ (fig. 2).

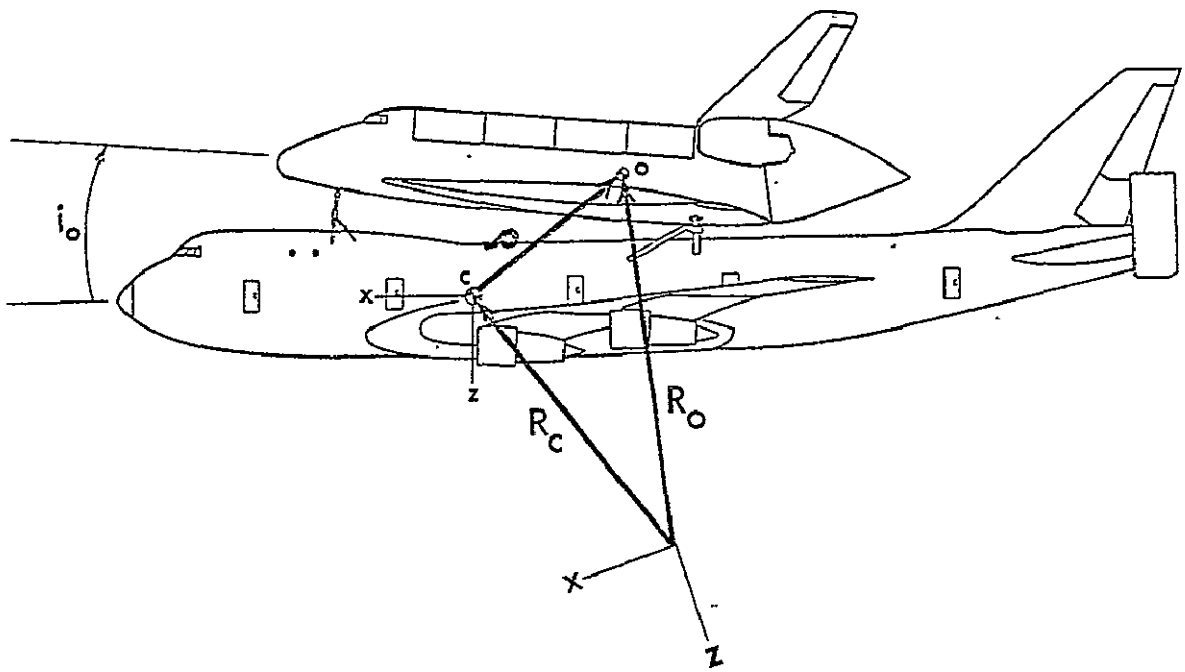

Figure 2. - Vehicle coordinate system

Affixing a second set of axes to the carrier aircraft, with the origin (C) located at the carrier c.g. and observing its motion, allows evaluation of the motion of any other point in the mated configuration, namely the Orbiter c.g., as well as the mated c.g. For example, the acceleration of the Orbiter c.g. (O) can be determined by knowing the relative position (ρ), the linear acceleration ($\ddot{R}$), angular rates (ω), and angular accelerations ($\dot{\omega}$) of the carrier c.g. (C),

$$\ddot{R}_o = \ddot{R}_c + \dot{\omega}_c \times \rho + \omega_c \times (\omega_c \times \rho) + a_{o/xyz} + 2\omega_c \times V_{o/xyz},$$

but since the mated vehicle is assumed to be a rigid body

$$\mathbf{a}_{o/xyz} = \mathbf{v}_{o/xyz} = 0$$

Therefore,

$$\ddot{\mathbf{R}}_o = \ddot{\mathbf{R}}_c + \dot{\boldsymbol{\omega}}_c \times \boldsymbol{\rho} + \boldsymbol{\omega}_c \times (\boldsymbol{\omega}_c + \boldsymbol{\rho}).$$

The total resultant or applied forces on either vehicle are then:

$$\mathbf{F}_{c_{\substack{\text{TOTAL}\\ \text{APPLIED}}}} = m_c \ddot{\mathbf{R}}_c$$

$$\mathbf{F}_{o_{\substack{\text{TOTAL}\\ \text{APPLIED}}}} = m_o \ddot{\mathbf{R}}_o$$

and

$$\mathbf{F}_{m_{\substack{\text{TOTAL}\\ \text{APPLIED}}}} = m_m \ddot{\mathbf{R}}_m$$

Similar use of kinematics provides the equations for calculating the resultant moments ($\mathbf{M}$) on each vehicle, i.e.

$$\mathbf{M}_{c_{\substack{\text{TOTAL}\\ \text{APPLIED}}}} = [I]_c \dot{\boldsymbol{\omega}}_c + \boldsymbol{\omega}_c \times [I]_c \boldsymbol{\omega}_c,$$

$$\mathbf{M}_{o_{\substack{\text{TOTAL}\\ \text{APPLIED}}}} = [I]_o \dot{\boldsymbol{\omega}}_o + \boldsymbol{\omega}_o \times [I]_o \boldsymbol{\omega}_o,$$

and

$$\mathbf{M}_{m_{\substack{\text{TOTAL}\\ \text{APPLIED}}}} = [I]_m \dot{\boldsymbol{\omega}}_m + \boldsymbol{\omega}_m \times [I]_m \boldsymbol{\omega}_m.$$

where, $\boldsymbol{\omega}_o = [A]\boldsymbol{\omega}_c$, $\dot{\boldsymbol{\omega}}_o = [A]_c \dot{\boldsymbol{\omega}}$

and $$\omega_m = \omega_c, \dot{\omega}_m = \dot{\omega}_c$$

From figure 3, the load cell outputs, expressed in the carrier body axis coordinate system, are as follows:

F_{F_Y} = Forward side force

F_{F_Z} = Forward vertical force (parallel to strut axis)

$F_{F_{X_7}}$, $F_{F_{Z_7}}$ = Drag and vertical components of forward vertical strut force (carrier body axis coordinate system)

F_{L_X} = Left aft drag force

F_{L_Z} = Left aft vertical force

F_{R_X} = Right aft drag force

F_{R_Y} = Right aft side force

F_{R_Z} = Right aft vertical force

where, $$F_{F_{X_7}} = F_{F_Z} \sin \lambda, \quad F_{F_{Z_7}} = F_{F_Z} \cos \lambda$$

and $$\lambda = 88.27° - \sin^{-1} \left[\frac{929.098 \sin(i_0 + 2.734°)}{1723336.5 - 1723333.7 \cos(i_0 + 2.734°)} \right]$$

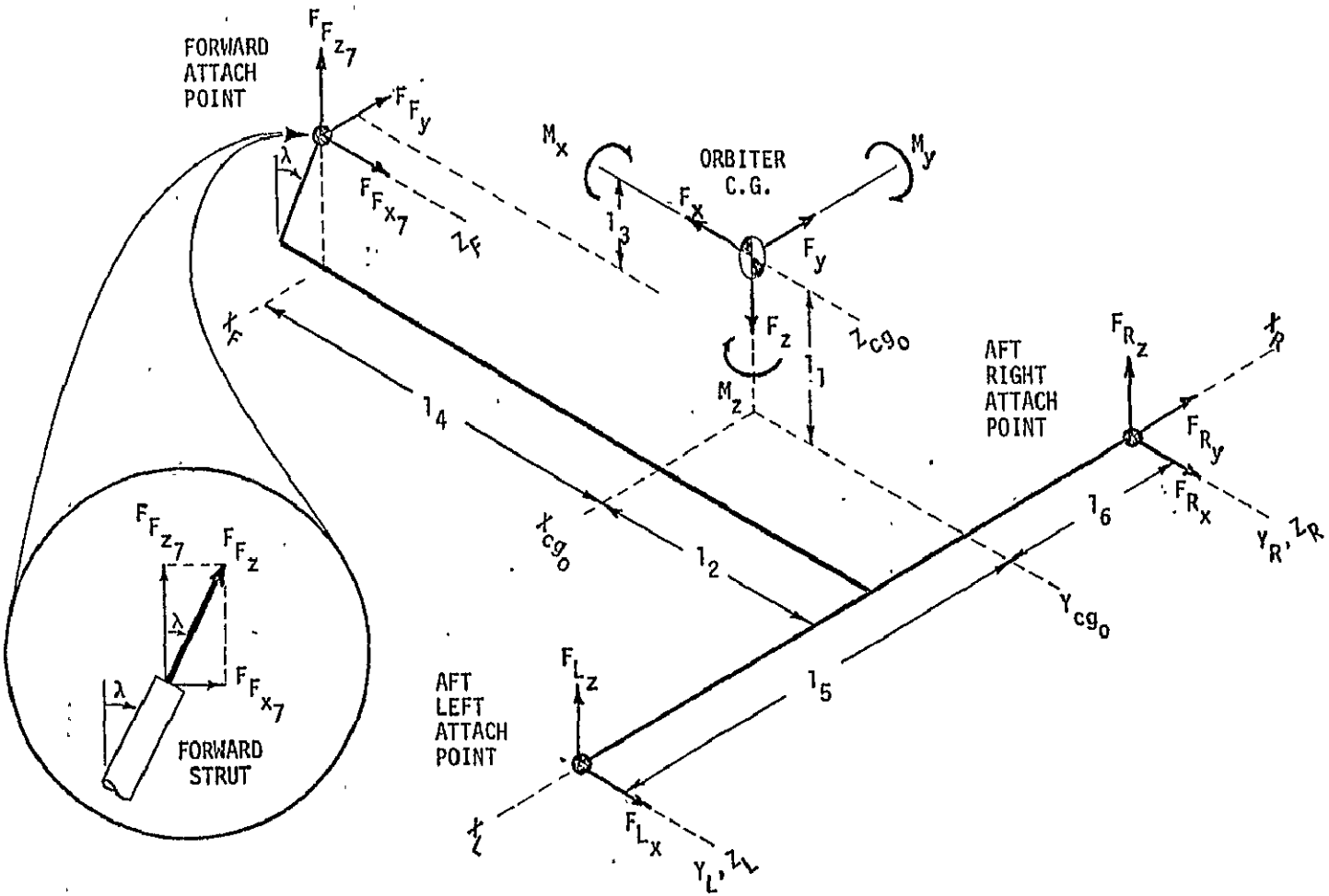

Figure 3. - Orbiter attach point geometry

Also shown in figure 3 are the moment arms from the orbiter c.g. to each load cell attach point based on the carrier body axis coordinate system. Using figure 3 in conjunction with figure 4, the moment arms are determined from

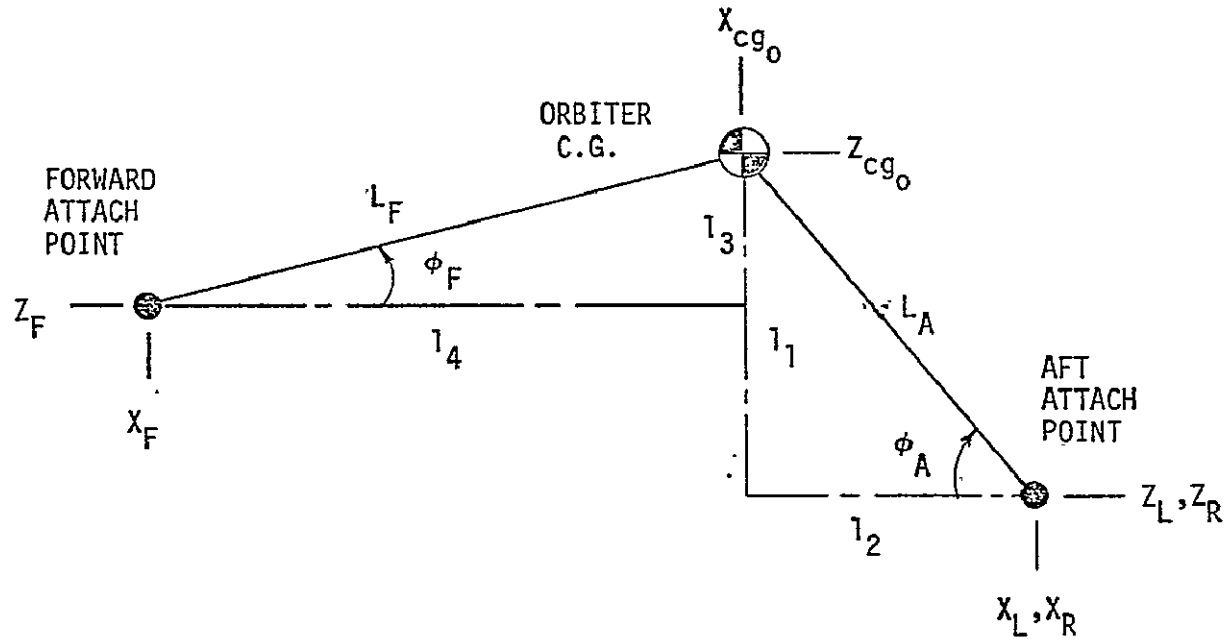

Figure 4. - Orbiter attach point moment arms

the following relations, making note of the fact that the attach point locations are in the orbiter body coordinate system:

$$\phi_F = \mathrm{TAN}^{-1}\left[\frac{Z_{cg_o} - Z_F}{X_{cg_o} - X_F}\right]$$

$$\phi_A = \mathrm{TAN}^{-1}\left[\frac{Z_{cg_o} - Z_R}{X_R - X_{cg_o}}\right]$$

$$L_F = \left[\frac{Z_{cg_o} - Z_R}{\sin \phi_F}\right]$$

$$L_A = \left[\frac{Z_{cg_o} - Z_R}{\sin \phi_A}\right]$$

$$l_1 = L_A \sin(\phi_A + i_o)/12$$

$$l_2 = L_A \cos(\phi_A + i_o)/12$$

$$l_3 = L_F \sin(\phi_F - i_o)/12$$

$$l_4 = L_F \cos(\phi_F - i_o)/12$$

$$l_5 = -(Y_L + Y_{cg_o})/12$$

$$l_6 = (Y_R - Y_{cg_o})/12$$

From figure 5, and using the Orbiter moment arms previously calculated, the

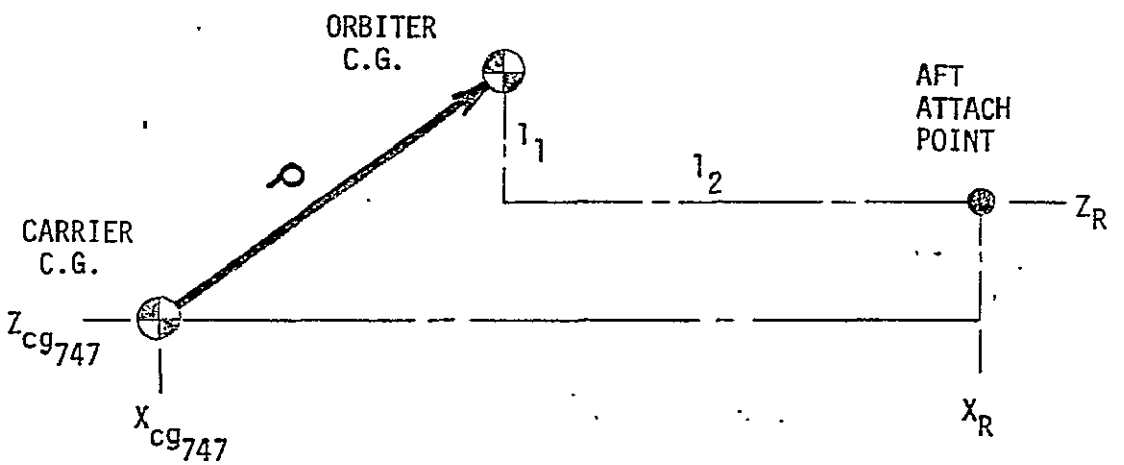

Figure 5. - Relative c.g. locations

position vector is:

$$\rho = \begin{bmatrix} l_2 - (X_R - X_{cg_{747}})/12 \\ (Y_{cg_o} - Y_{cg_{747}})/12 \\ (Z_{cg_{747}} - Z_R)/12 - l_1 \end{bmatrix}$$

Note that in figure 5, the attach point locations are in the carrier body axis coordinate system.

The following free body diagrams and corresponding equations of motion are used in calculating the aerodynamic force and moment coefficients of the mated vehicle, the SCA in proximity of the orbiter, and the orbiter in proximity of the SCA.

<u>Mated vehicle aerodynamic coefficients</u>. - Force coefficients (drag, side force, lift)

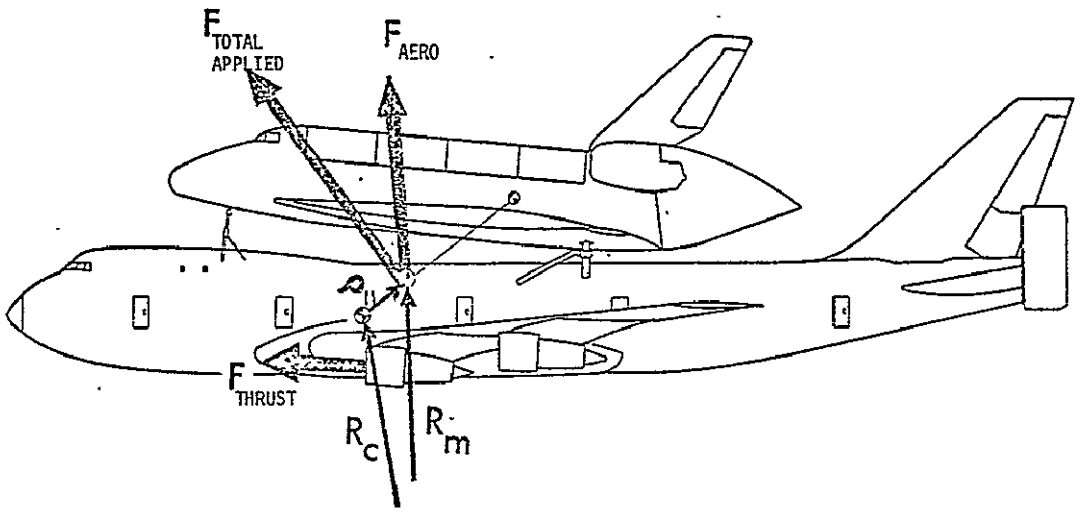

$$F_{\substack{TOTAL \\ APPLIED}} = F_{AERO} + F_{THRUST}$$

$$F_{\substack{TOTAL \\ APPLIED}} = m_m \ddot{R}_m = m_m \left[\ddot{R}_c + \dot{\omega}_c \times \rho_m + \omega_c \times \left(\omega_c \times \rho_m \right) \right]$$

$$F_{AERO} = m_m \ddot{R}_m - F_{THRUST}$$

$$C_{\substack{BODY \\ AXIS}} = \frac{F_{AERO}}{\bar{q}\, S_c}$$

$$C_{\substack{STABILITY \\ AXIS}} = \left[G\right]_c C_{\substack{BODY \\ AXIS}}$$

$\left[G\right]_C$ = Transformation from Carrier BODY AXIS TO Carrier STABILITY AXIS.

<u>Mated vehicle aerodynamic coefficients</u>. - Moment coefficients (rolling moment, pitching moment, yawing moment)

$$M_{\substack{TOTAL \\ APPLIED}} = M_{AERO} + M_{THRUST}$$

$$M_{\substack{TOTAL \\ APPLIED}} = \left[I\right]_m \dot{\omega}_c + \omega_c \quad \left[I\right]_m \omega_c$$

$$M_{AERO} = M_{\substack{TOTAL \\ APPLIED}} - M_{THRUST}$$

$$C_{MOMENT} = \frac{M_{AERO}}{\bar{q}\, S_c \ell_c}$$

Carrier aerodynamic coefficients (proximity). - Force coefficients (drag, side force, lift)

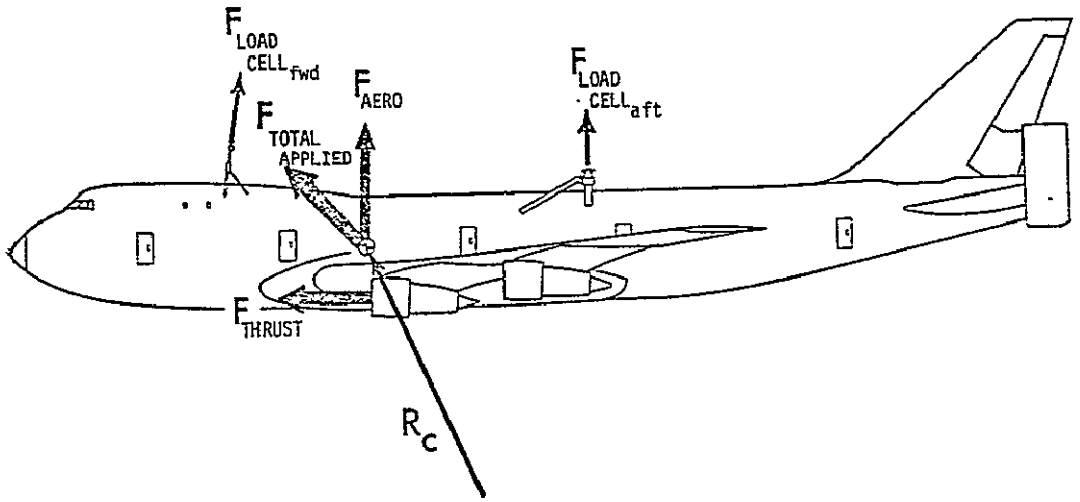

$$F_{\substack{TOTAL\\APPLIED}} = F_{AERO} + F_{\substack{LOAD\\CELL}} + F_{THRUST}$$

$$F_{\substack{TOTAL\\APPLIED}} = m_c \ddot{R}_c$$

$$F_{\substack{LOAD\\CELL}} = L_c = L_{fwd} + L_{left} + L_{right}$$

$$F_{AERO} = m_c \ddot{R}_c - F_{\substack{LOAD\\CELL}} - F_{THRUST}$$

$$C_{\substack{BODY\\AXIS}} = \frac{F_{AERO}}{\bar{q}\, S_c}$$

$$C_{\substack{STABILITY\\AXIS}} = \left[G\right]_c C_{\substack{BODY\\AXIS}}$$

Carrier aerodynamic coefficients (proximity). - Moment coefficients (rolling moment, pitching moment, yawing moment)

$$M_{\substack{TOTAL\\APPLIED}} = M_{AERO} + M_{\substack{LOAD\\CELL}} + M_{THRUST}$$

$$M_{\substack{TOTAL\\APPLIED}} = [I]_c \dot{\omega}_c + \omega_c \times [I]_c \omega_c$$

$$M_{\substack{LOAD\\CELL}} = \sum_{s=1}^{3} \left(\rho_{s_c} \times L_{s_c} \right)$$

$$M_{AERO} = M_{\substack{TOTAL\\APPLIED}} - M_{\substack{LOAD\\CELL}} - M_{THRUST}$$

$$C_{MOMENT} = \frac{M_{AERO}}{\bar{q}\, S_c \ell_c}$$

Orbiter aerodynamic coefficients (proximity). - Force coefficients (drag, side force, lift)

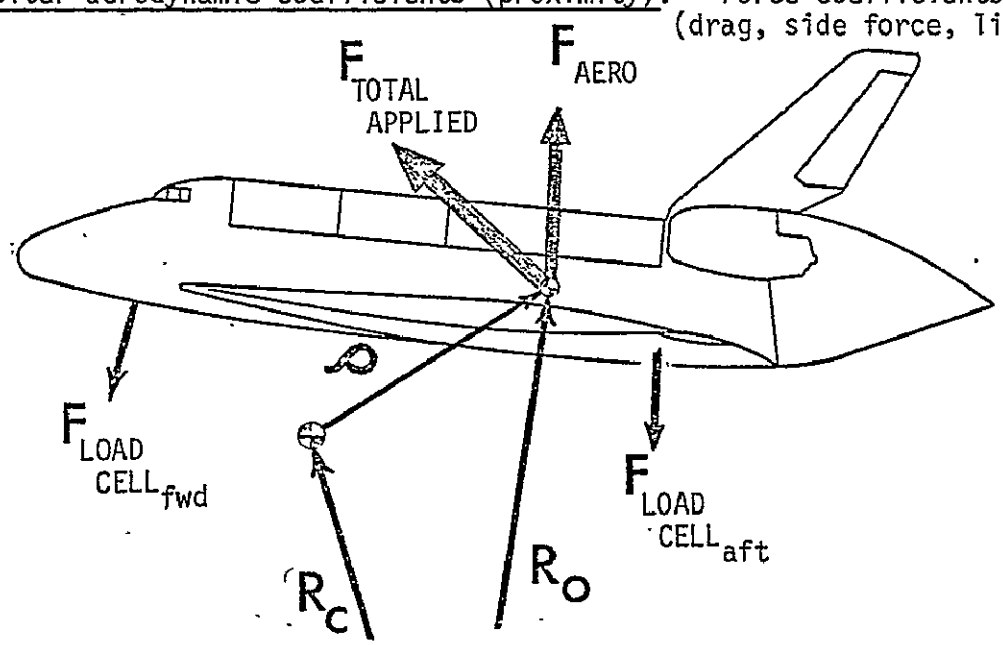

$$F_{\substack{TOTAL\\APPLIED}} = F_{AERO} + F_{\substack{LOAD\\CELL}}$$

$$F_{\substack{TOTAL\\APPLIED}} = m_o \ddot{R}_o = m_o\left[\ddot{R}_c + \dot{\omega}_c \times \rho + \omega_c \times \left(\omega_c \times \rho\right)\right]$$

$$F_{\substack{LOAD\\CELL}} = L_o = L_{fwd} + L_{left} + L_{right}$$

$$F_{AERO} = \left[A\right]\left[m_o \ddot{R}_o - L_o\right]$$

$$C_{\substack{BODY\\AXIS}} = \frac{F_{AERO}}{\bar{q}\, S_o}$$

$$C_{\substack{STABILITY\\AXIS}} = \left[G\right]_o C_{\substack{BODY\\AXIS}}$$

$\left[A\right]$ = Transformation from CARRIER to ORBITER coordinate system at INCIDENCE angle i_o.

<u>Orbiter aerodynamic coefficients (proximity)</u>. - Moment coefficients (rolling moment, pitching moment, yawing moment)

$$M_{\substack{TOTAL\\APPLIED}} = M_{AERO} - M_{\substack{LOAD\\CELL}}$$

$$M_{\substack{TOTAL\\APPLIED}} = \left[I\right]_o \dot{\omega}_o + \omega_o \times \left[I\right]_o \omega_o$$

$$M_{\substack{LOAD\\CELL}} \quad \sum_{s=1}^{3}\left(\rho_{s_o} \times L_{s_o}\right)$$

$$M_{AERO} = M_{\substack{TOTAL \\ APPLIED}} - M_{\substack{LOAD \\ CELL}}$$

$$C_{MOMENT} = \frac{M_{AERO}}{\bar{q}\, S_o \ell_o}$$

ORBITER PITCH ACCELERATION

$$\ddot{\theta}_{ORB} = \frac{M_{AERO_Y}}{I_{yy_o}}$$

RELATIVE LOAD FACTORS

$$\Delta N_Z = L_o\left(\frac{W_o + W_c}{W_o W_c}\right)$$

Aerodynamic Uncertainties

An integral part of the separation analysis is knowing the uncertainty associated with each coefficient and how that uncertainty affects the size of the separation window, as well as the vehicle trajectory. Each aerodynamic coefficient is a function of i independent measurements, n_i, and the uncertainty of each measurement is Δn_i.

$$C = f(n_1, n_2, n_3, \ldots . n_i) \qquad (1)$$

The uncertainty in each calculated coefficient is obtained using the following equation:

$$\Delta C = [(\frac{\delta C}{\delta n_1})^2 (\Delta n_1)^2 + (\frac{\delta C}{\delta n_2})^2 (\Delta n_2)^2 + \ldots + (\frac{\delta C}{\delta n_i})^2 (\Delta n_i)^2]^{1/2}. \qquad (2)$$

The uncertainties in the aerodynamic coefficients are based on the quoted accuracies of the load measurement system and the flight test instrumentation.

The uncertainty in the Orbiter force and moment coefficients are calculated as follows. The Orbiter aerodynamic forces are first calculated with respect to the SCA body coordinate system from the following equations:

$$C_x = \frac{M_o[N_x + \dot{q}\Delta Z - \dot{r}\Delta y + qp\Delta y - q^2\Delta x + rp\Delta z - r^2\Delta x] - \sum F_x}{\bar{q}\ S_o}$$

$$C_y = \frac{M_o[N_y - \dot{p}\Delta Z + \dot{r}\Delta x - p^2\Delta y + pq\Delta x + rq\Delta z - r^2\Delta y] - \sum F_y}{\bar{q}\ S_o}$$

$$C_z = \frac{M_o[N_z + \dot{p}\Delta y - \dot{q}\Delta x - p^2\Delta z + pr\Delta x - q^2\Delta z + qr\Delta y] - \sum F_z}{\bar{q}\ S_o}.$$

From equation (2), the uncertainty in C_x is:

$$N_x' = \left[\frac{M_o}{\bar{q}S_o}\right]^2 [\Delta N_x]^2$$

$$p' = \left[\frac{M_o(q\Delta y + r\Delta z)}{\bar{q}S_o}\right]^2 [\Delta p]^2$$

$$q' = \left[\frac{M_o(p\Delta y - 2q\Delta x)}{\bar{q}S_o}\right]^2 [\Delta q]^2$$

$$r' = \left[\frac{M_o(p\Delta z - 2q\Delta x)}{\bar{q}S_o}\right]^2 [\Delta r]^2$$

$$\dot{p}' = \underline{\qquad\qquad}$$

$$\dot{q}' = \left[\frac{M_o \Delta z}{\bar{q} S_o}\right]^2 [\Delta \dot{q}]^2$$

$$\dot{r}' = \left[\frac{M_o \Delta y}{\bar{q} S_o}\right]^2 [\Delta \dot{r}]^2$$

$$\bar{q}' = \left[\frac{-M_o(N_X + \dot{q}\Delta z - \dot{r}\Delta y - qp\Delta y - q^2\Delta x + rp\Delta z - r^2\Delta x) + L_{XT}}{\bar{q}^2 S_o}\right]^2 [\Delta \bar{q}]^2$$

$$F'_{F_X} = [\frac{1}{\bar{q} S_o}]^2 [\Delta F_{F_X}]^2$$

$$F'_{L_X} = [\frac{1}{\bar{q} S_o}]^2 [\Delta F_{L_X}]^2$$

$$F'_{R_X} = [\frac{1}{\bar{q} S_o}]^2 [\Delta F_{R_X}]^2$$

$$\Delta C_X = [N'_X + p' + q' + r' + \dot{p}' + \dot{q}' + \dot{r}' + \bar{q}' + F'_{F_X} + F'_{L_X} \; F'_{R_X}]^{1/2}$$

Similarly, the uncertainty in C_Z is calculated. The coefficients are then transformed into the Orbiter body axis coordinate system.

$$C_{A_o} = C_X \cos(i_o) - C_Z \sin(i_o),$$

$$C_{N_o} = C_X \sin(i_o) + C_Z \cos(i_o).$$

The uncertainties in these two coefficients are:

$$\Delta C_{A_o} = [(\cos i_o)^2(\Delta C_X)^2 + (\sin i_o)^2(\Delta C_Z)^2]^{1/2},$$

$$\Delta C_{N_o} = [(\sin i_o)^2(\Delta C_X)^2 + (\cos i_o)^2(\Delta C_Z)^2]^{1/2}.$$

Finally, these coefficients are transformed into the Orbiter stability axis coordinate system,

$$C_{D_o} = C_{A_o} \cos(\alpha_c + i_o) + C_{N_o} \sin(\alpha_c + i_o),$$

$$C_{L_o} = -C_{A_o} \sin(\alpha_c + i_o) + C_{N_o} \cos(\alpha_c + i_o),$$

and the uncertainties in the Orbiter coefficients of lift and drag are:

$$\Delta C_{L_o} = [(\cos(\alpha_c + i_o))^2(\Delta C_{A_o})^2 + (\sin(\alpha_c + i_o))^2(\Delta C_{N_o})^2$$
$$+ (C_{A_o} \sin(\alpha_c + i_o) - C_{N_o} \cos(\alpha_c + i_o))^2(\Delta\alpha_c)^2]^{1/2}$$

$$\Delta C_{D_o} = [(\sin(\alpha_c + i_o))^2(\Delta C_{A_o})^2 + (\cos(\alpha_c + i_o))^2(\Delta C_{N_o})^2$$
$$+ (C_{A_o} \cos(\alpha_c + i_o) + C_{N_o} \sin(\alpha_c + i_o))^2(\Delta\alpha_c)^2]^{1/2}.$$

The uncertainty in the Orbiter side force coefficient, ΔC_{y_o}, is found in the same way.

The Orbiter moment coefficients are based on the following equations:

$$C_{m_x} = \frac{\dot{p}_o I_{xx} + q_o r_o (I_{zz_o} - I_{yy_o}) + I_{xz_o}(\dot{r}_o + p_o q_o)}{\bar{q} S_o b_o}$$

$$+ \frac{- F_{FZ}\rho_{FY} + F_{FY}\rho_{FZ} - F_{LZ}\rho_{LY} - F_{RZ}\rho_{FY} + F_{RY}\rho_{RZ}}{\bar{q} S_o b_o}$$

$$C_{m_y} = \frac{\dot{q}_o I_{yy_o} + p_o r_o (I_{xx_o} - I_{zz_o}) + I_{xz_o}(r_o^2 - p_o^2)}{\bar{q} S_o \bar{c}_o}$$

$$+ \frac{F_{FZ}\rho_{FX} - F_{FX}\rho_{FZ} + F_{LZ}\rho_{LX} - F_{LX}\rho_{LZ} + F_{RZ}\rho_{RX} - F_{RX}\rho_{RZ}}{\bar{q} S_o \bar{c}_o}$$

$$C_{m_z} = \frac{\dot{r}_o I_{zz_o} + p_o q_o (I_{yy_o} - I_{xx_o}) - I_{xz_o}(q_o r_o - \dot{p}_o)}{\bar{q} S_o b_o}$$

$$+ \frac{- F_{FY}\rho_{FX} + F_{FX}\rho_{FY} + F_{LX}\rho_{LY} - F_{RY}\rho_{RX} + F_{RX}\rho_{RY}}{\bar{q} S_o b_o}$$

Again using equation (2), the uncertainty in the Orbiter pitching moment is:

$$\dot{q}' = \left[\frac{I_{yy_o}}{\bar{q} S_o \bar{c}}\right]^2 [\Delta\dot{q}]^2$$

$$p' = \left[\frac{r_o(I_{xx_o} - I_{zz}) + 2\, p_o I_{xz_o}}{\bar{q} S_o \bar{c}}\right]^2 [\Delta p]^2$$

$$r' = \left[\frac{p_o(I_{xx_o} - I_{zz_o}) - 2\, r_o I_{xz_o}}{\bar{q} S_o \bar{c}}\right]^2 [\Delta r]^2$$

$$\bar{q}' = \left[\frac{\dot{q}_o I_{yy_o} + p_o r_o (I_{xx_o} - I_{xz_o}) + I_{xz_o}(r_o^2 - p_o^2)}{\bar{q}^2 S_o \bar{c}}\right.$$

$$\left. + \frac{F_{FZ}\rho_{FX} - F_{FX}\rho_{FZ} + F_{LZ}\rho_{LX} - F_{LX}\rho_{LZ} + F_{RZ}\rho_{RX} - F_{RX}\rho_{RZ}}{\bar{q}^2 S_o \bar{c}}\right]^2 [\Delta\bar{q}]^2$$

$$F_{FZ}' = \left[\frac{\rho_{FX}}{\bar{q}S_o\bar{c}}\right]^2 [\Delta F_{FZ}]^2$$

$$F_{FX}' = \left[\frac{\rho_{FZ}}{\bar{q}S_o\bar{c}}\right]^2 [\Delta F_{FX}]^2$$

$$F_{LZ}' = \left[\frac{\rho_{LX}}{\bar{q}S_o\bar{c}}\right]^2 [\Delta F_{LZ}]^2$$

$$F_{LX}' = \left[\frac{\rho_{LZ}}{\bar{q}S_o\bar{c}}\right]^2 [\Delta F_{LX}]^2$$

$$F_{RZ}' = \left[\frac{\rho_{RX}}{\bar{q}S_o\bar{c}}\right]^2 [\Delta F_{RZ}]^2$$

$$F_{RX}' = \left[\frac{\rho_{RZ}}{\bar{q}S_o\bar{c}}\right]^2 [\Delta F_{RX}]^2$$

$$\Delta C_{m_y} = [\dot{q}' + p' + r' + \bar{q}' + F_{FZ}' + F_{FX}' + F_{LZ}' + F_{LX}' + F_{RZ}' + F_{RX}']^{1/2}$$

Similarly, the uncertainties in the rolling moment and yawing moment are calculated.

Analysis of the uncertainties in the SCA proximity and mated vehicle coefficients is performed in a like manner.

Predictions

One of the subroutines in the program uses the Algorithms presented in reference 1 and reference 2 to build-up force and moment coefficients for each vehicle using contributing elements, such as control surface deflections and proximity effects, etc. The data is a digitized version of the data presented in references 1 and 2 and stored in look-up tables in the program. Input to this subroutine comes from configuration and attitude parameters recorded on the flight data tape and orbiter elevon position time histories.

PROGRAM DECK SET-UP

Data needed to run GRACIE, other than that on the flight data tape, are input using subroutines and data cards. Two subroutines require changes for reducing data from each flight.

The first subroutine is called ORBDEF and is used to provide orbiter control surface deflection time histories.

SUBROUTINE ORBDEF

```
      SUBROUTINE ORBDEF(TIME,LELV,RELV,ORUD,IO,DELZ,TC,DELBF)
C
C     SUBROUTINE TO PROVIDE ORBITER CONTROL SURFACE DEFLECTIONS
C
      REAL LELV,IO
      TI = TIME - 30766.
      IF(TI.LT.11.6) LELV = 0.
      IF(TI.GE.11.6.AND.TI.LT.16.6)  LELV = 1.7
      IF(TI.GE.16.6.AND.TI.LT.17.6)  LELV =0.
      IF(TI.GE.17.6.AND.TI.LT.27.5)  LELV =-1.3
      IF(TI.GE.27.5.AND.TI.LT.30.5)  LELV =0.
      IF(TI.GE.30.5.AND.TI.LT.44.4)  LELV =1.
      IF(TI.GE.44.4)   LELV = 0.
      IF(TI.LT.11.9) RELV = 0.
      IF(TI.GE.11.9.AND.TI.LT.16.8)  RELV =1.7
      IF(TI.GE.16.8.AND.TI.LT.17.8)  RELV =0.
      IF(TI.GE.17.8.AND.TI.LT.27.7)  RELV =-1.3
      IF(TI.GE.27.7.AND.TI.LT.30.7)  RELV =0.
      IF(TI.GE.30.7.AND.TI.LT.44.6)  RELV =-1.
      IF(TI.GE.44.6)   RELV = 0.
      ORUD  =  0.0
      IO  =  6.0
      DELZ  =  0.
      TC  =  1.0
      DELBF = -9.7
      RETURN
      END
```

Where:

TI = reference time for deflection time histories (REAL)

TIME = time from data tape (REAL)

LELV = left elevon position in degrees (REAL)

RELV = right elevon position in degrees (REAL)

ORUD = rudder position in degrees (REAL)

IO = orbiter incidence angle in degrees (REAL)

DELZ = relative normal displacement between the orbiter and carrier in feet, 0 feet is defined as mated (REAL)

TC = tailcone designation 1. = tailcone on

0. = tailcone off

DELBF = orbiter body flap position in degrees (REAL)

The subroutine returns control surface positions for use in the main program for each time step on the flight data tape.

The second subroutine is called TRUST and provides a time history of the carrier thrust for portions of the flight of interest.

SUBROUTINE TRUST 73/74 OPT=1

```
      SUBROUTINE  TRUST(TIME,THRUST,TZ)
C
C     ***** SUBROUTINE TC PROVIDE CARRIER THRUST *****
C        *****  THRUST FOR CA-1 SEP DATA RUN
      TZ = 0.
       THRUST = -1100.
      RETURN
      END
```

Where:

TZ = The normal component of thrust which is always 0.

THRUST = Axial component of thrust for all four carrier engines in pounds. (REAL)

Three data cards are also required to run GRACIE. They are used to input mated vehicle gross weight, data locations on the data tape, print-plot options, and plot titles.

The first data card contains the mated vehicle gross weight in thousand pounds. The example card represents 523,000 lb.

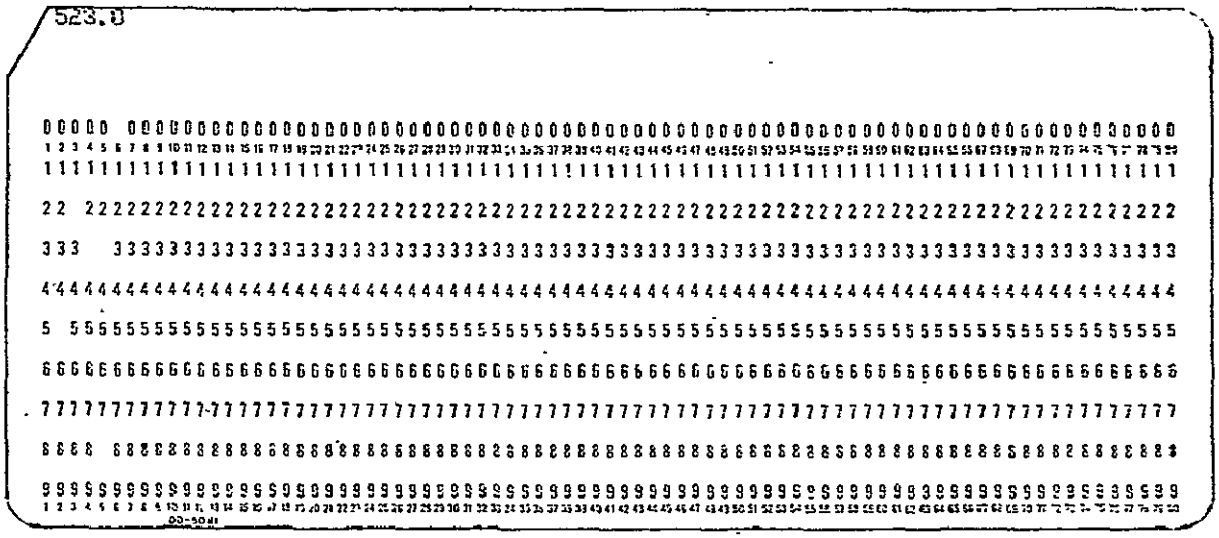

The second data card contains the first point location on the data tape, the final point location on the data tape, and the print plot option. For the print plot option:

1 = print tabulated listing and plot results

2 = print tabulated data only

3 = plot results only

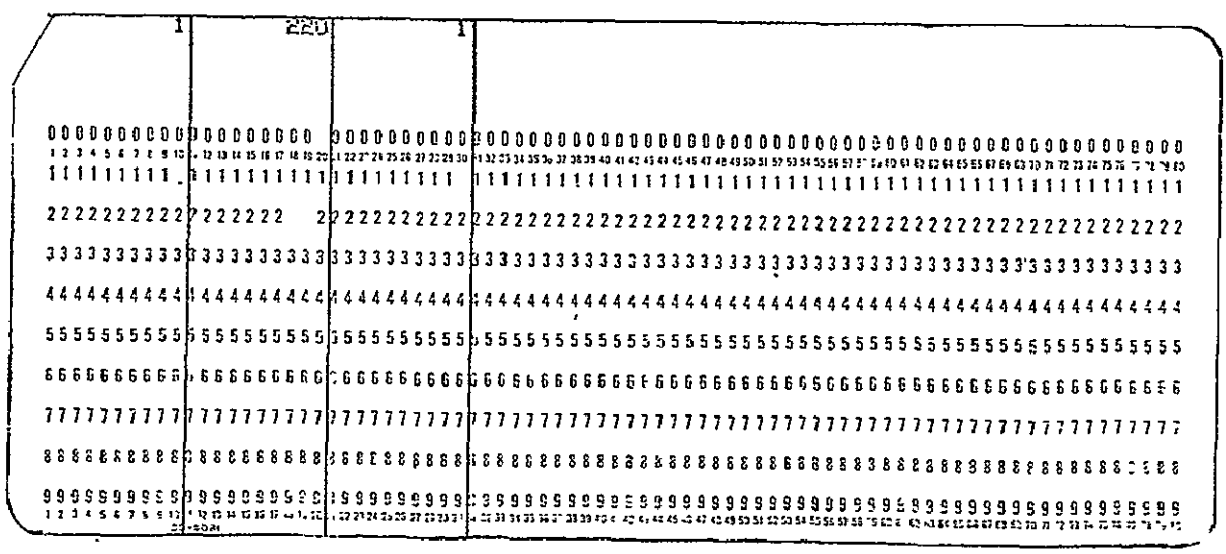

The example card asks for data from file 1 on the data tape to file 220, and for both tabulated listings and plotted results. Examples of the tabulated listings and plotted data are found in appendix A and appendix B, respectively.

The third and final data card is used for titling the plotted results. The titles are plotted in blocks of 30 figures. The example card below prints the title as shown on the example plots in appendix B.

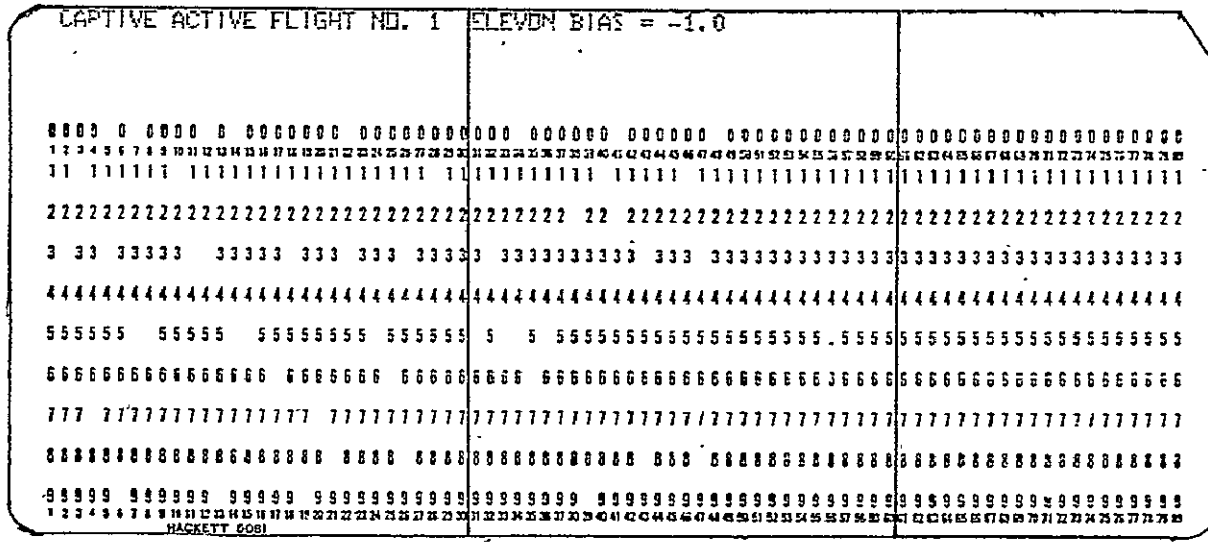

APPENDIX A

TAB DATA

CAPTIVE/ACTIVE FLIGHT NO. 1 DATE 6/28/77 1 TO 220

TIME	COEF.	NCM.	I+L	I-L	DATA BOOK
8.332690	CDO =	.0391	.0273	.0162	.0473
	CLO =	.3509	.0204	.0055	.3709
	CMRO=	.0536	.0070	.0061	.0425
	CYO =	.0017	.0158	.0090	-.0083
	CLLO=	.0055	.0016	.0014	.0032
	CLNO=	.0008	.0045	.0042	.0012
	CDC =	.0445	.0153	-.0063	.0358
	CLC =	.1976	.0173	.0111	.1648
	CMRC=	.0000	.0082	.0067	.0279
	CYC =	-.0028	.0101	.0020	-.0024
	CLLC=	-.0035	.0007	.0004	-.0006
	CLNC=	.0001	.0010	.0007	-.0004
	CDM =	.0606	.0068	CYM = -.0232	.0070
	CLM =	.3696	.0204	CLLM= -.0125	.0002
	CMRM=	.0090	.0010	CLNM= .0002	.0002

RT.ELV = -1.00 ORBAIL = 1.00
LT.ELV = 1.00 ORBRUD = 0.00
DELNZ = .847 .040 1.052
QDOTO = 5.161 1.880 1.307
INCIDENCE = 6.0 QBAR = 250.99
ALPHAC = 3.27 ALT = 17213.
ALPHAO = 9.27 MACH = .573
BETA = .18 VKEAS = 272.3
GAMMA = -7.51 VFPS = 600.7
THETA = -4.24 NLF = .982
ROLL = .40 XCGC = 1334.04
YCGC = 0.00
YAW = 98.6 ZCGC = 200.09

NX = -3.897 HSTAB = 1.4
NY = -.002
NZ =-31.595 ELVI/C = -.8/ 1.5
RUDU/L = .2/ .5
P = -.045
Q = -.023 SPO/M/I = 0./ 44./ 19.
R = .084 /
AILI/C = 3.7/ -.3
PD = -1.183
QD = -.171 CW = -1.7
RD = .048
FFY = -2666.
FFZ = 29517.
FLX = 3807.
FLZ = 46611.
FRX = -9794.
FRY = -1119.
FRZ = 14531.

WTC = 372960.
IXXC = 11427324.
IYYC = 21967398.
IZZC = 33024008.
IXZC = -1088987.
WTO = 150040.
IXXO = 726000.
IYYO = 5251000.
IZZO = 5480000.
IXZO = -123000.
THRUST = -4400.0

TIME	COEF.	NCM.	I+L	I-L	DATA BOOK
8.332695	CDO =	.0410	.0274	.0161	.0474
	CLO =	.3615	.0205	.0056	.3711
	CMRO=	.0551	.0070	.0061	.0425
	CYO =	.0025	.0158	.0090	-.0083
	CLLO=	.0068	.0016	.0014	.0032
	CLNO=	.0009	.0045	.0042	.0012
	CDC =	.0444	.0153	-.0062	.0359
	CLC =	.1995	.0173	.0111	.1663
	CMRC=	.0028	.0082	.0067	.0274
	CYC =	.0020	.0101	.0020	-.0024
	CLLC=	.0001	.0007	.0004	-.0006
	CLNC=	-.0003	.0010	.0007	-.0004
	CDM =	.0657	.0069	CYM = .0071	.0070
	CLM =	.3761	.0205	CLLM= .0037	.0002
	CMRM=	.0138	.0010	CLNM= -.0003	.0002

RT.ELV = -1.00 ORBAIL = 1.00
LT.ELV = 1.00 ORBRUD = 0.00
DELNZ = .889 .040 1.057
QDOTO = 5.300 1.880 1.309
INCIDENCE = 6.0 QBAR = 250.99
ALPHAC = 3.28 ALT = 17213.
ALPHAO = 9.28 MACH = .573
BETA = .18 VKEAS = 272.3
GAMMA = -7.52 VFPS = 600.7
THETA = -4.24 NLF = 1.001
ROLL = .44 XCGC = 1334.04
YCGC = 0.00
YAW = 98.6 ZCGC = 200.09

NX = -3.897 HSTAB = 1.4
NY = .241
NZ =-32.202 ELVI/C = -.7/ 1.5
RUDU/L = .3/ .5
P = -.045
Q = -.023 SPO/M/I = 0./ 44./ 19.
R = .084
AILI/C = 3.0/ -.3
PD = .210
QD = .071 CW = -1.7
RD = -.100
FFY = -1804.
FFZ = 30611.
FLX = 4426.
FLZ = 47817.
FRX = -10116.
FRY = 1759.
FRZ = 16674.

WTC = 372960.
IXXC = 11427324.
IYYC = 21967398.
IZZC = 33024008.
IXZC = -1088987.
WTO = 150040.
IXXO = 726000.
IYYO = 5251000.
IZZO = 5480000.
IXZO = -123000.
THRUST = -4400.0

ACDO = .0366 / .0471 ACYO = .0022 /-.0084 ACDC = .0451 / .0358 ACYC = .0329 /-.0021 ACDM = .0669 ACYM =-.0060
ACLO = .3585 / .3702 ACLLO = .0063 / .0031 ACLC = .1976 / .1594 ACLLC =-.0000 /-.0014 ACLM = .3723 ACLLM =-.0035
ACMO = .0523 / .0425 ACLNO = .0006 / .0012 ACMC = .0083 / .0307 ACLNC = .0000 /-.0008 ACMM = .0164 ACLNM = .0000

TIME	Time of day (pacific time) - hours minutes seconds hundredths
COEF.	Vehicle aerodynamic coefficients O - Orbiter C - Carrier (SCA) M - Mated CMR - Vehicle pitching moment about the vehicle moment reference center
NOM.	Coefficients as calculated from GRACIE
I+L	Absolute value of the uncertainty due to instrumentation inaccuracies plus the uncertainty due to LMS inaccuracies
I-L	Absolute value of the uncertainty due to instrumentation inaccuracies minus the uncertainty due to LMS inaccuracies
DATA BOOK	Predicted coefficients based on the "Orbiter/747 Carrier Separation Aerodynamic Data Book".
RT. ELV	Right hand inboard Orbiter elevon position (deg)
LT. ELV	Left hand inboard Orbiter elevon position (deg)
DELNZ	Relative normal acceleration ± uncertainty, predicted (g)
QDOTO	Instantaneous Orbiter pitch acceleration ± uncertainty, predicted (deg/sec^2)
INCIDENCE	Orbiter incidence angle (deg)
ALPHAC	SCA angle of attack (deg)
ALPHAO	Orbiter angle of attack (deg)
BETA	SCA angle of sideslip (deg)
GAMMA	SCA flight path angle (deg)
THETA	SCA pitch angle (deg)
ROLL	SCA roll angle (deg)
YAW	SCA yaw angle (deg)
ORBAIL	Orbiter aileron angle (deg)

ORBRUD	Orbiter rudder position (deg)
QBAR	Dynamic pressure (lb/ft^2)
ALT	Altitude (MSL ft)
VKEAS	Velocity (knots equivalent airspeed)
VFPS	True airspeed (ft per sec)
NLF	Mated vehicle load factor (g)
XCGC YCGC ZCGC	SCA cg location in body coordinate system (in.)
NX NY NZ	SCA cg linear acceleration (ft/sec^2)
P Q R	SCA body angular rates (deg/sec)
PD QD RD	SCA body angular accelerations (deg/sec^2)
FFY FFZ FLX FLZ FRX FRY FRZ	LMS attach forces (lb)
HSTAB	SCA horizontal stabilizer position (deg)
ELVI/O	SCA elevator (inboard/outboard) position (deg)
RUDU/L	SCA rudder (upper/lower) position (deg)
SPO/M/I	SCA spoiler panel (outboard/middle/inboard) position (deg)
AILI/O	SCA aileron (inboard/outboard) position (deg)
CW	SCA control wheel position (deg)

WTC IXXC IYYC IZZC IXZC	SCA weight (lb) and inertias (slug-ft^2)
WTO IXXO IYYO IZZO IXZO	Orbiter weight (lb) and inertias (slug-ft^2)
THRUST	SCA total engine thrust (lb)

Average coefficient values for previous twenty samples are tabulated after twentieth time step in the following format:

$$\text{COEFFICIENT NAME} = \frac{\text{AVERAGE CALCULATED VALUE}}{\text{AVERAGE DATA BOOK VALUE}}$$

APPENDIX B

PLOTS

PROGRAM PLOTTING CAPABILITY

GRACIE generates time history plots of the aerodynamic coefficients for each vehicle, the angle of attack of each vehicle, the relative normal load factor (ΔN_z), and the instantaneous pitch acceleration of the Orbiter ($\ddot{\theta}$). With minor modifications, the program has the capability to plot any input or calculated parameter. As an example, GRACIE generated the following set of plots.

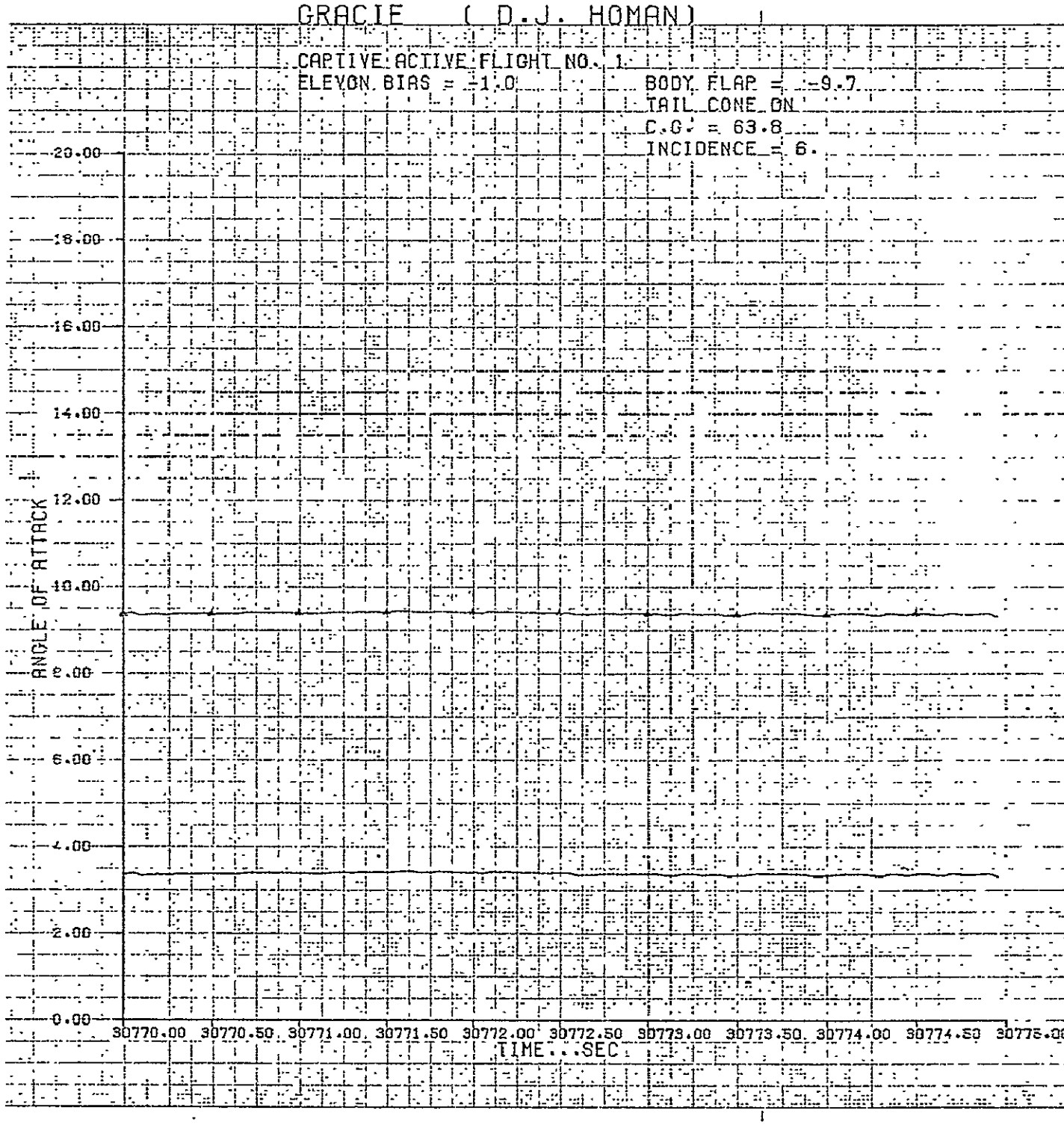
GRACIE (D.J. HOMAN)
CAPTIVE ACTIVE FLIGHT NO. 1
ELEVON BIAS = -1.0
BODY FLAP = -9.7
TAIL CONE ON
C.G. = 63.8
INCIDENCE = 6.
ANGLE OF ATTACK
20.00
18.00
16.00
14.00
12.00
10.00
8.00
6.00
4.00
2.00
0.00
30770.00
30770.50
30771.00
30771.50
30772.00
30772.50
30773.00
30773.50
30774.00
30774.50
30775.00
TIME...SEC

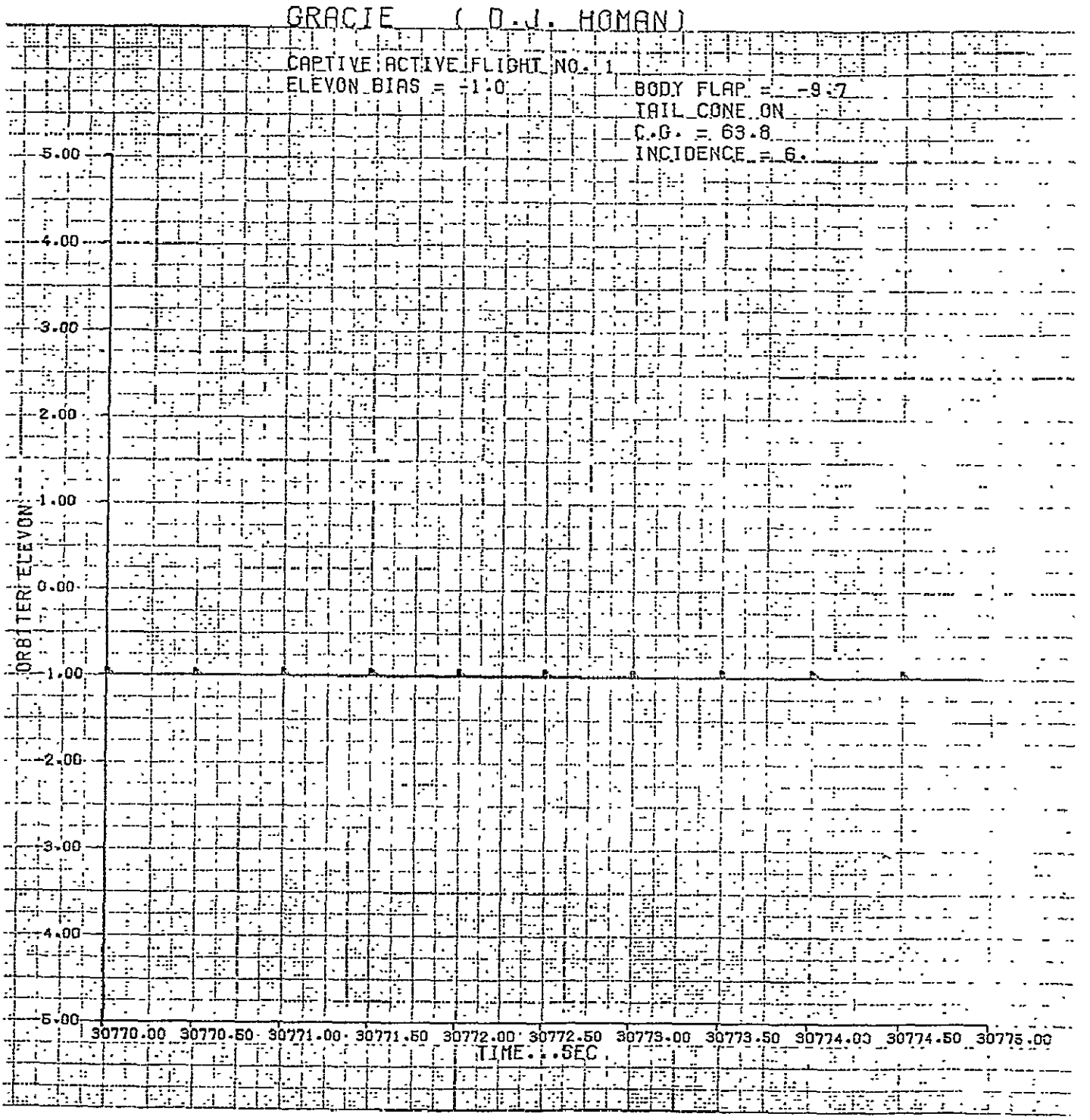
GRACIE (D.J. HOMAN)
CAPTIVE ACTIVE FLIGHT NO. 1
ELEVON BIAS = -1.0
BODY FLAP = -9.7
TAIL CONE ON
C.G. = 63.8
INCIDENCE = 6.
5.00
4.00
3.00
2.00
1.00
0.00
-1.00
-2.00
-3.00
-4.00
-5.00
ORBITER ELEVON
30770.00
30770.50
30771.00
30771.50
30772.00
30772.50
30773.00
30773.50
30774.00
30774.50
30775.00
TIME...SEC

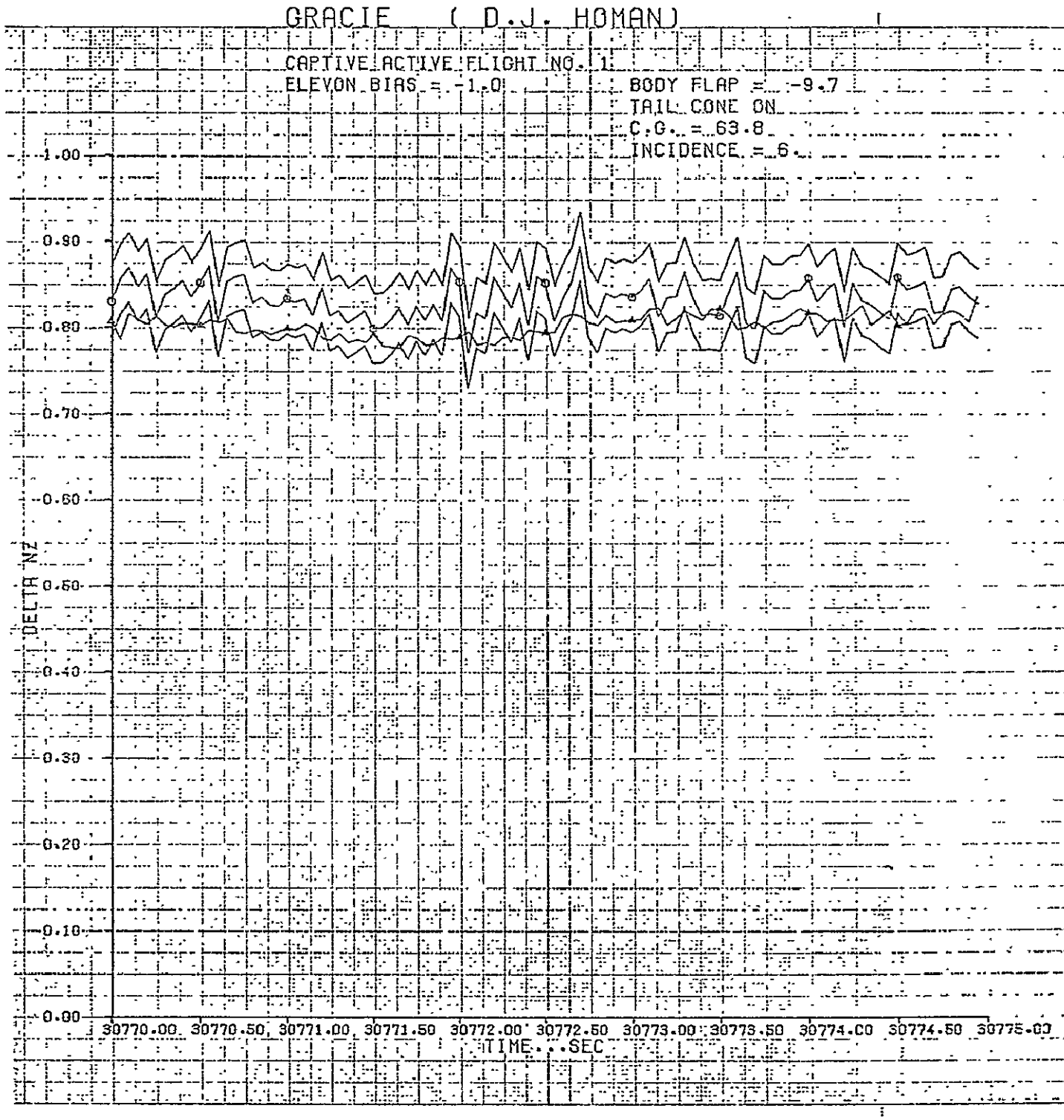
GRACIE (D.J. HOMAN)
CAPTIVE ACTIVE FLIGHT NO. 1
ELEVON BIAS = -1.0
BODY FLAP = -9.7
TAIL CONE ON
C.G. = 63.8
INCIDENCE = 6.
1.00
0.90
0.80
0.70
0.60
0.50
0.40
0.30
0.20
0.10
0.00
DELTA NZ
30770.00 30770.50 30771.00 30771.50 30772.00 30772.50 30773.00 30773.50 30774.00 30774.50 30775.00
TIME...SEC

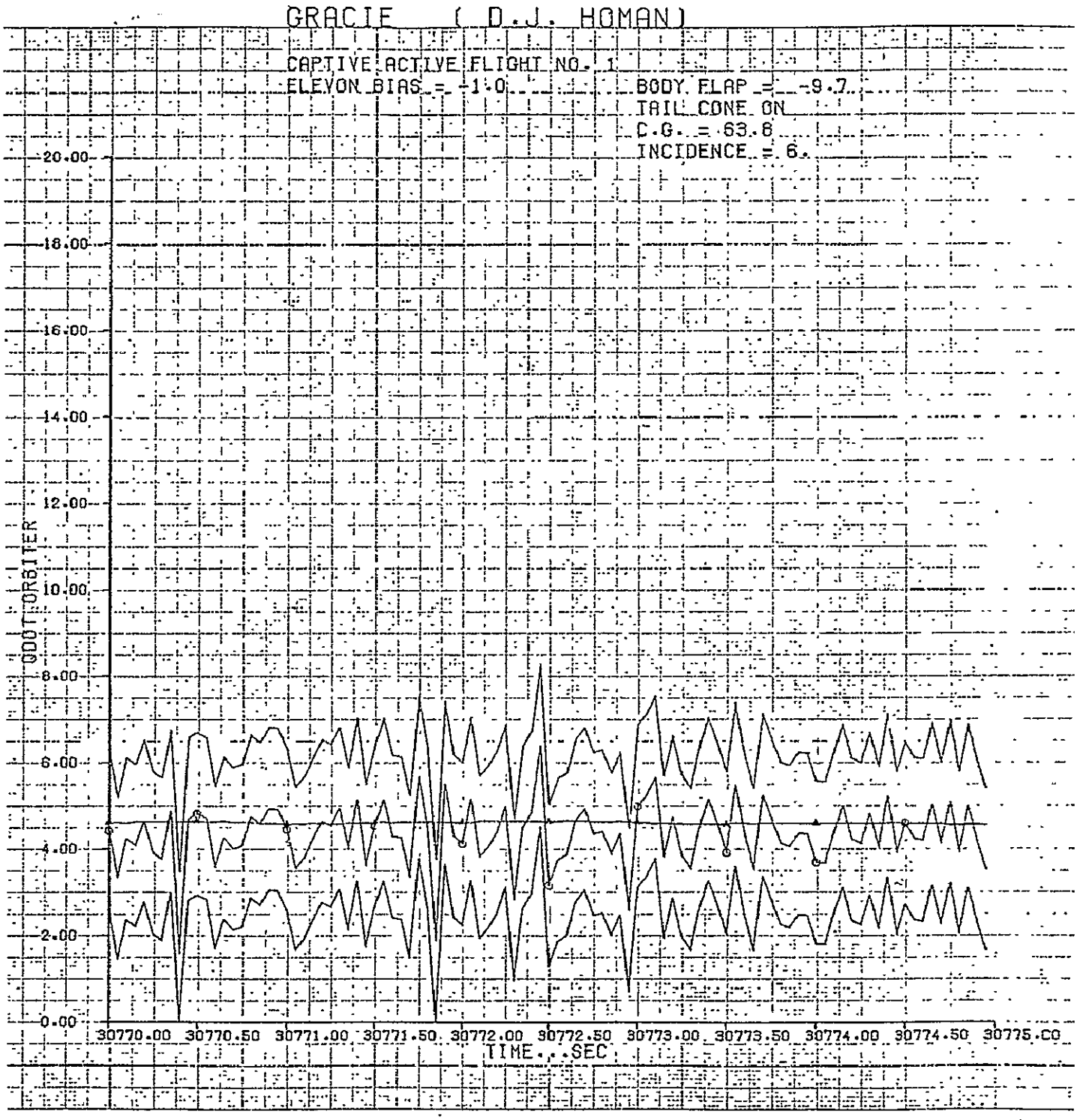
GRACIE (D.J. HOMAN)
CAPTIVE ACTIVE FLIGHT NO. 1
ELEVON BIAS = -1.0
BODY FLAP = -9.7
TAIL CONE ON
C.G. = 63.8
INCIDENCE = 6.
QDOT ORBITER
20.00
18.00
16.00
14.00
12.00
10.00
8.00
6.00
4.00
2.00
0.00
30770.00
30770.50
30771.00
30771.50
30772.00
30772.50
30773.00
30773.50
30774.00
30774.50
30775.00
TIME...SEC

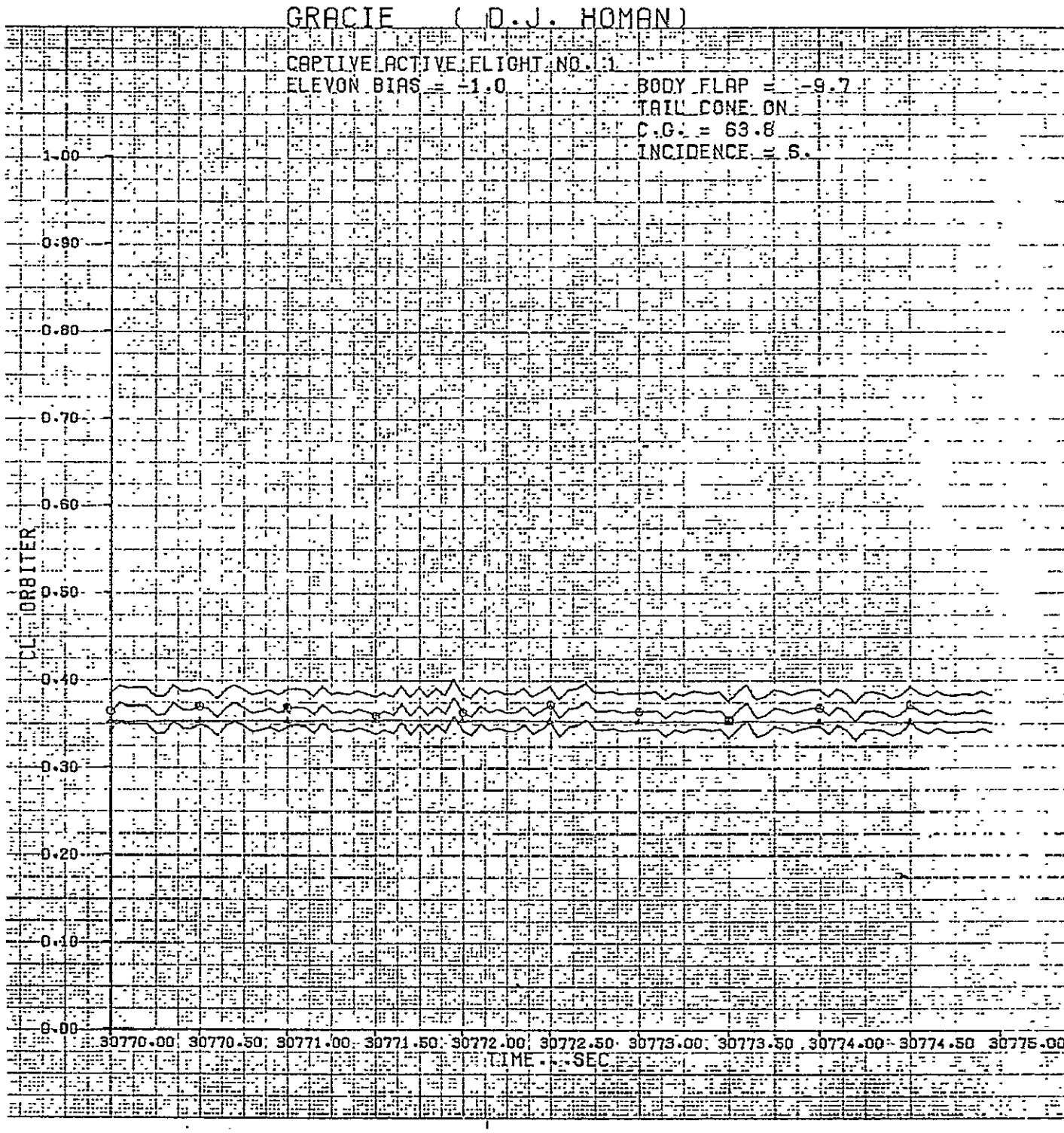
GRACIE (D.J. HOMAN)
CAPTIVE ACTIVE FLIGHT NO. 1
ELEVON BIAS = -1.0
BODY FLAP = -9.7
TAIL CONE ON
C.G. = 63.8
INCIDENCE = 6.
CL ORBITER
1.00
0.90
0.80
0.70
0.60
0.50
0.40
0.30
0.20
0.10
0.00
30770.00
30770.50
30771.00
30771.50
30772.00
30772.50
30773.00
30773.50
30774.00
30774.50
30775.00
TIME - SEC

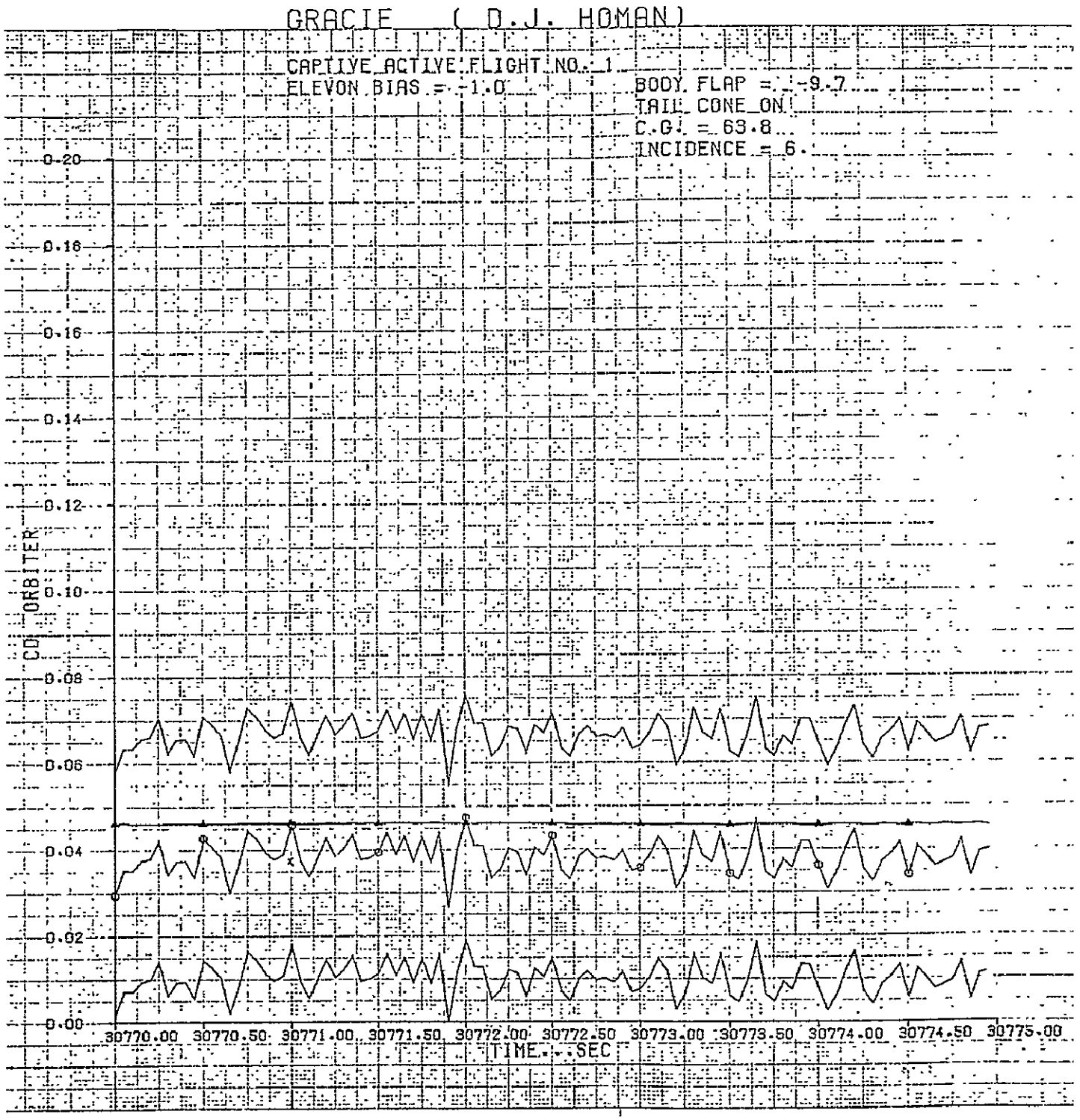
GRACIE (D.J. HOMAN)
CAPTIVE ACTIVE FLIGHT NO. 1
ELEVON BIAS = -1.0
BODY FLAP = -9.7
TAIL CONE ON
C.G. = 63.8
INCIDENCE = 6.
CD ORBITER
0.20
0.18
0.16
0.14
0.12
0.10
0.08
0.06
0.04
0.02
0.00
30770.00
30770.50
30771.00
30771.50
30772.00
30772.50
30773.00
30773.50
30774.00
30774.50
30775.00
TIME - SEC

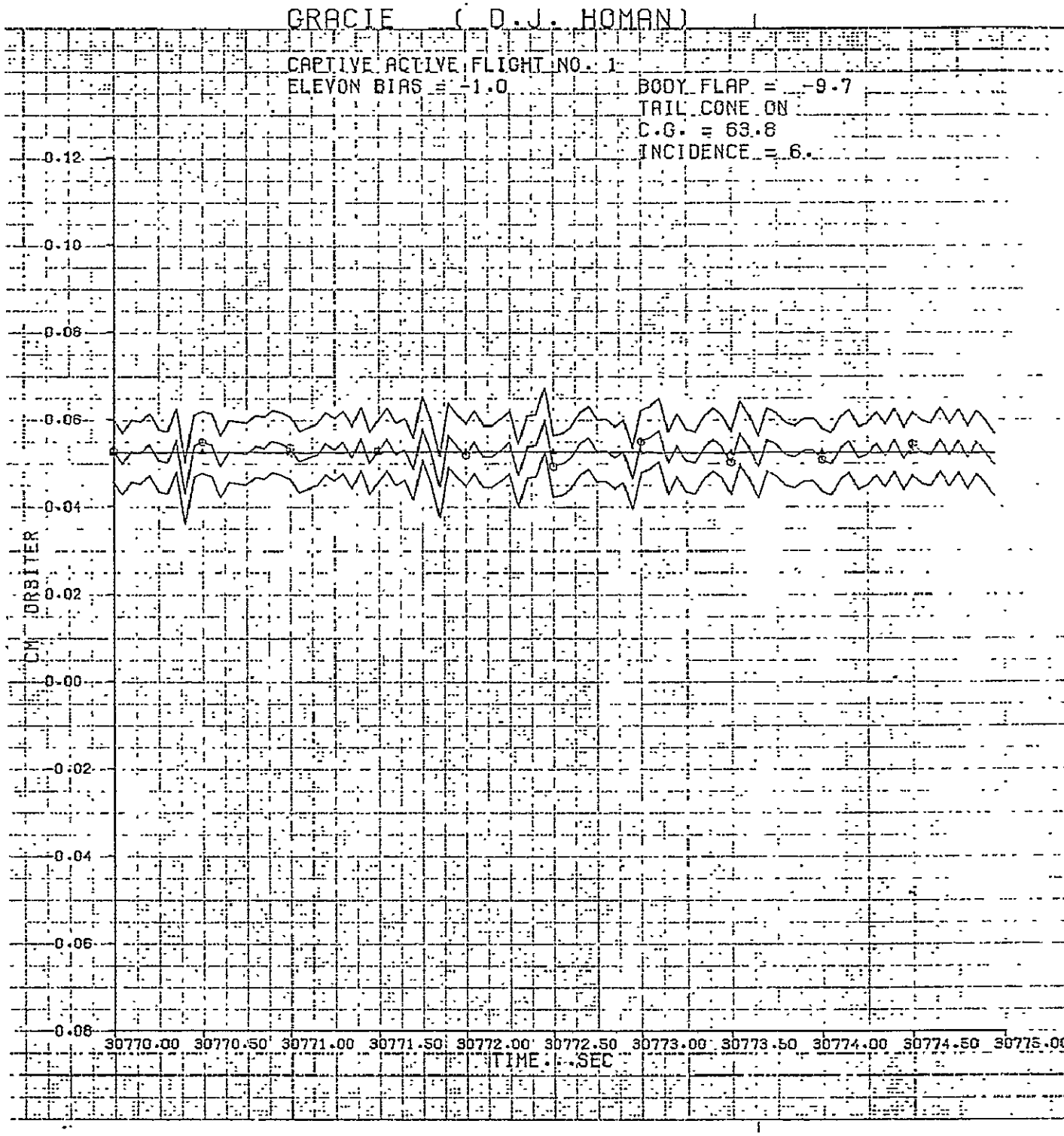
GRACIE (D.J. HOMAN)
CAPTIVE ACTIVE FLIGHT NO. 1
ELEVON BIAS = -1.0
BODY FLAP = -9.7
TAIL CONE ON
C.G. = 63.8
INCIDENCE = 6.
0.12
0.10
0.08
0.06
0.04
0.02
0.00
-0.02
-0.04
-0.06
-0.08
CM ORBITER
30770.00
30770.50
30771.00
30771.50
30772.00
30772.50
30773.00
30773.50
30774.00
30774.50
30775.00
TIME - SEC

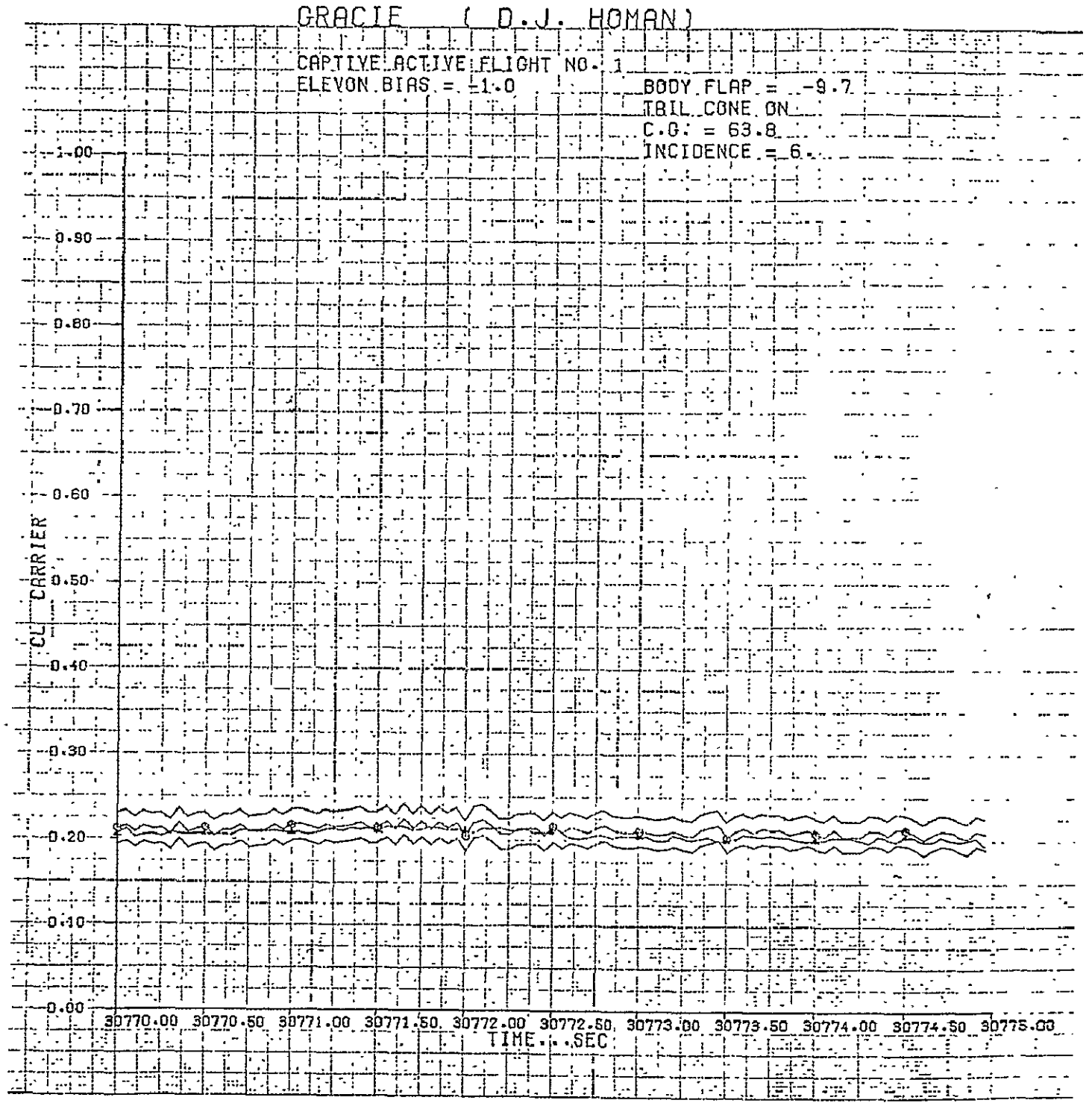
GRACIE (D.J. HOMAN)
CAPTIVE ACTIVE FLIGHT NO. 1
ELEVON BIAS = -1.0
BODY FLAP = -9.7
TAIL CONE ON
C.G. = 63.8
INCIDENCE = 6.
CL CARRIER
1.00
0.90
0.80
0.70
0.60
0.50
0.40
0.30
0.20
0.10
0.00
30770.00 30770.50 30771.00 30771.50 30772.00 30772.50 30773.00 30773.50 30774.00 30774.50 30775.00
TIME - SEC

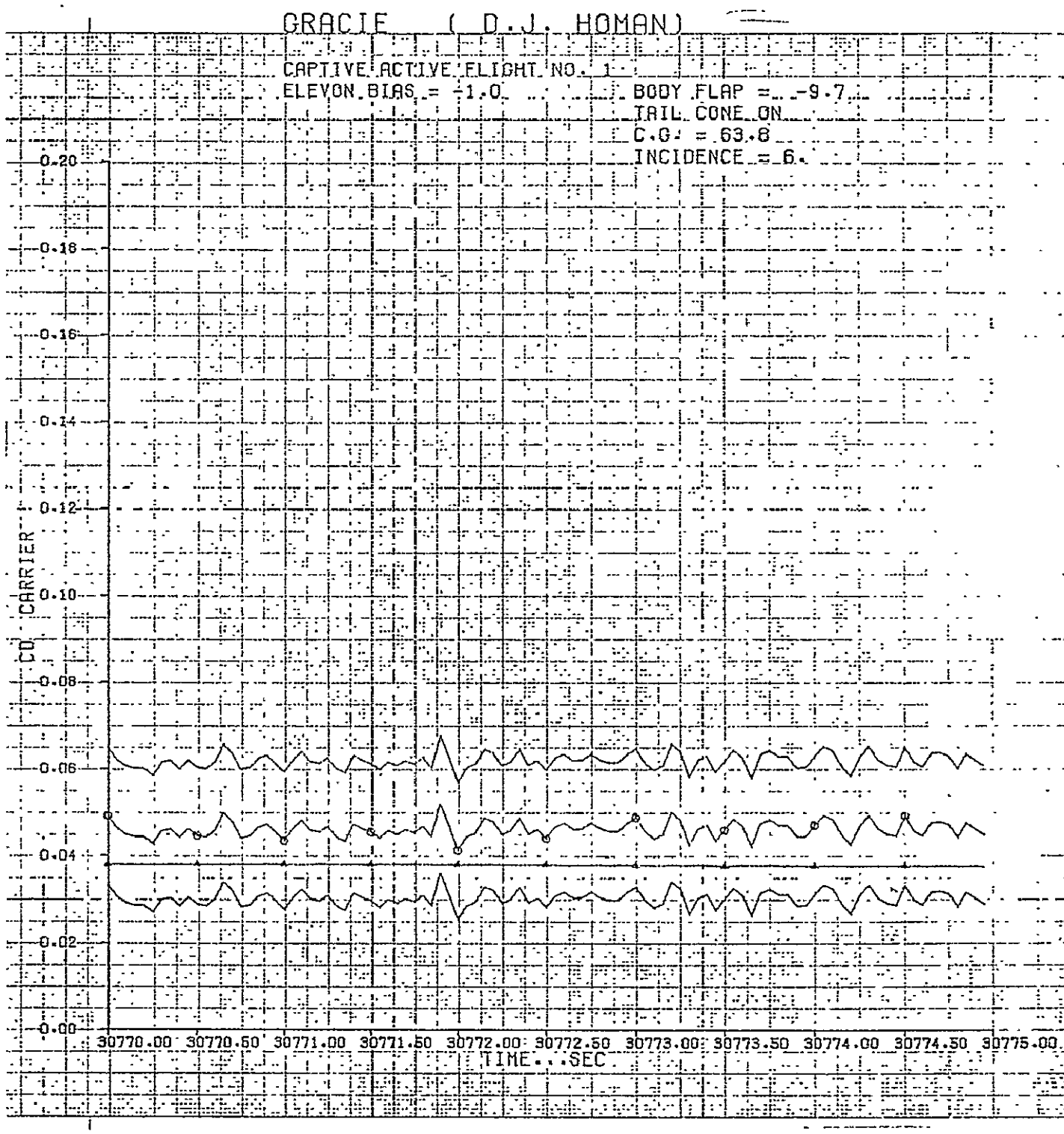
GRACIE (D.J. HOMAN)
CAPTIVE ACTIVE FLIGHT NO. 1
ELEVON BIAS = -1.0
BODY FLAP = -9.7
TAIL CONE ON
C.G. = 63.8
INCIDENCE = 6.
CD CARRIER
0.20
0.18
0.16
0.14
0.12
0.10
0.08
0.06
0.04
0.02
0.00
30770.00 30770.50 30771.00 30771.50 30772.00 30772.50 30773.00 30773.50 30774.00 30774.50 30775.00
TIME...SEC

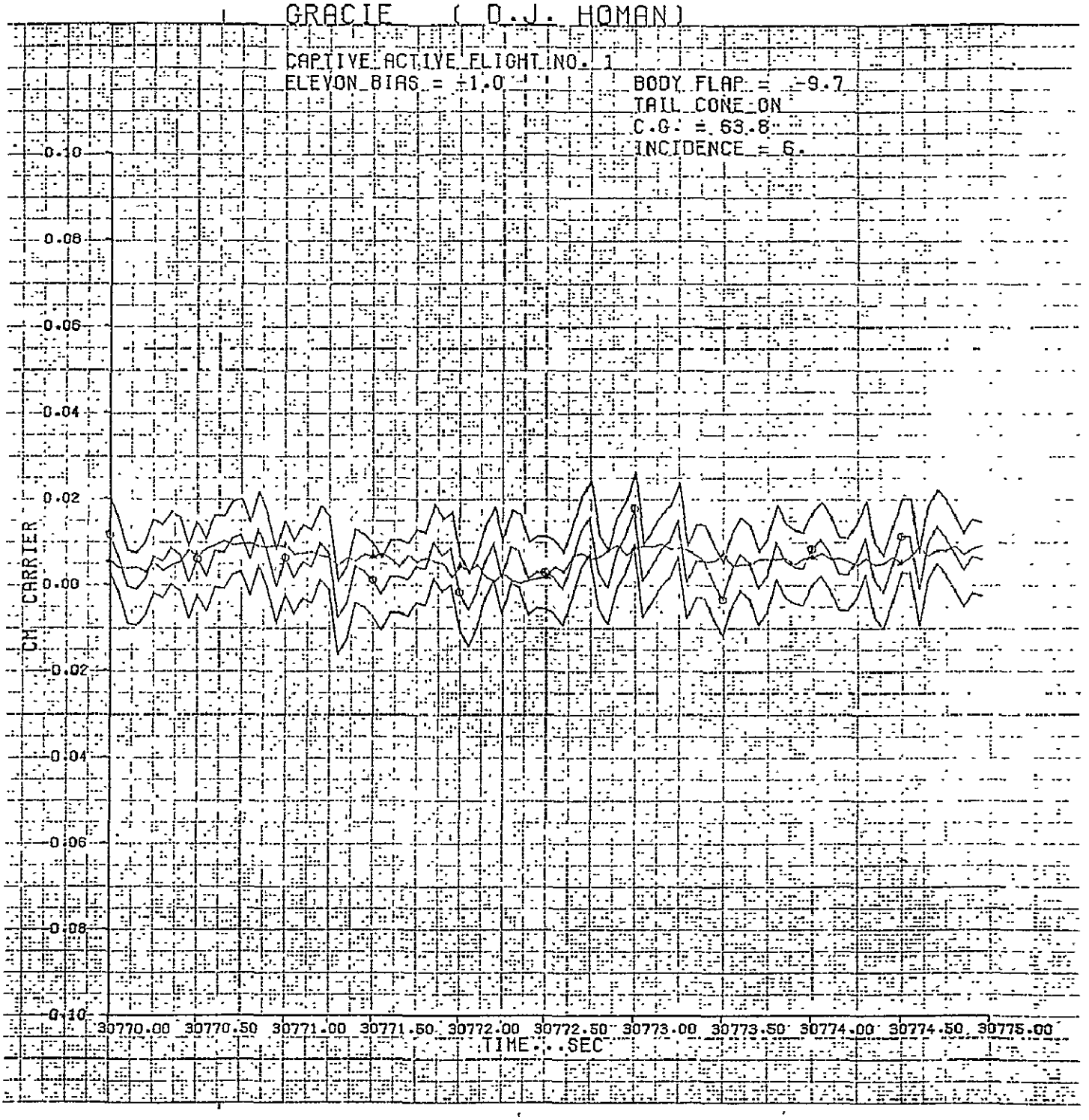
GRACIE (D.J. HOMAN)
CAPTIVE ACTIVE FLIGHT NO. 1
ELEVON BIAS = +1.0
BODY FLAP = -9.7
TAIL CONE ON
C.G. = 63.8
INCIDENCE = 6.
0.10
0.08
0.06
0.04
0.02
0.00
-0.02
-0.04
-0.06
-0.08
-0.10
CM CARRIER
30770.00 30770.50 30771.00 30771.50 30772.00 30772.50 30773.00 30773.50 30774.00 30774.50 30775.00
TIME ..SEC

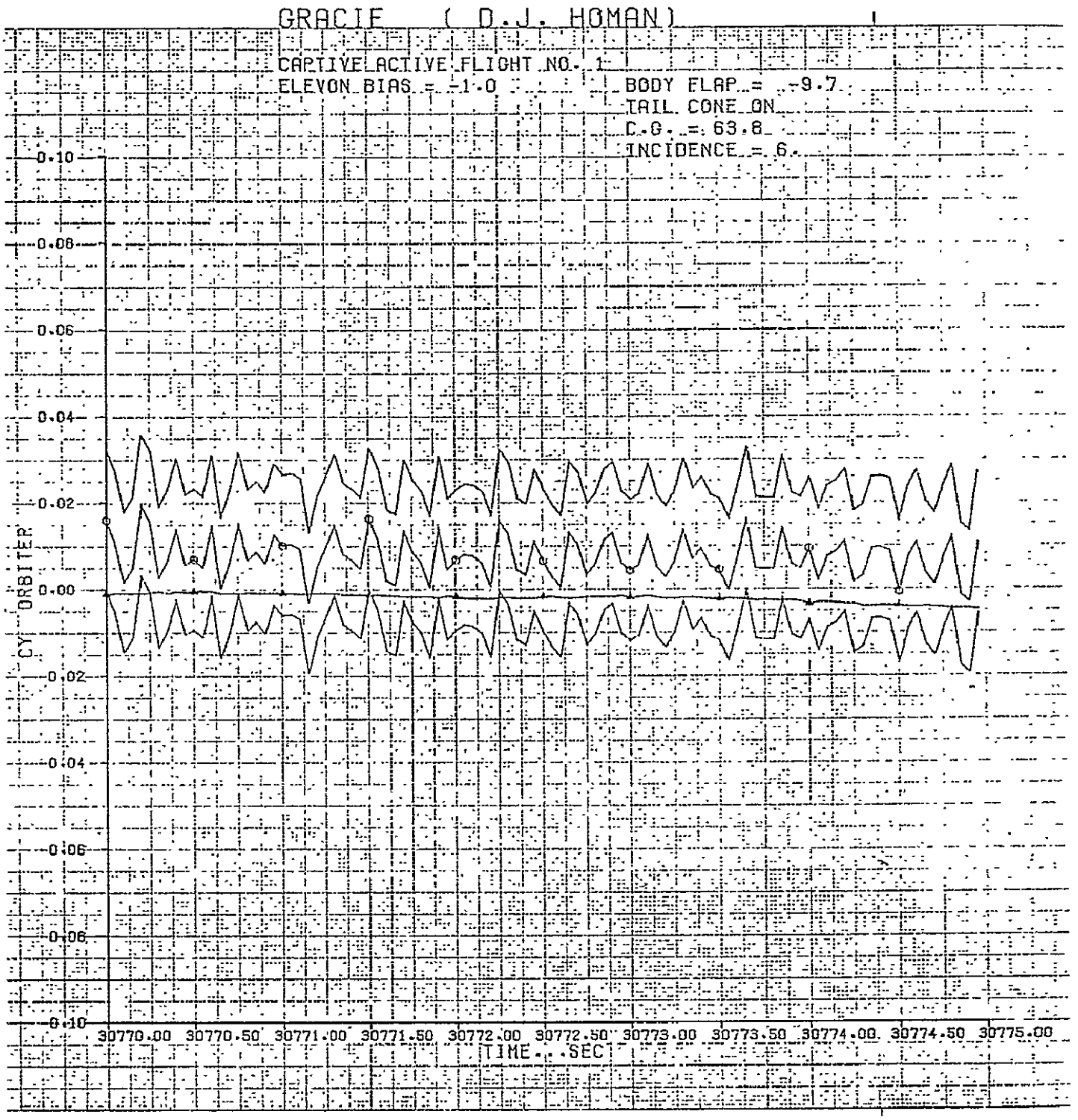
GRACIE (D.J. HOMAN)
CAPTIVE ACTIVE FLIGHT NO. 1
ELEVON BIAS = -1.0
BODY FLAP = -9.7
TAIL CONE ON
C.G. = 63.8
INCIDENCE = 6.
0.10
0.08
0.06
0.04
0.02
0.00
-0.02
-0.04
-0.06
-0.08
-0.10
CY ORBITER
30770.00
30770.50
30771.00
30771.50
30772.00
30772.50
30773.00
30773.50
30774.00
30774.50
30775.00
TIME - SEC

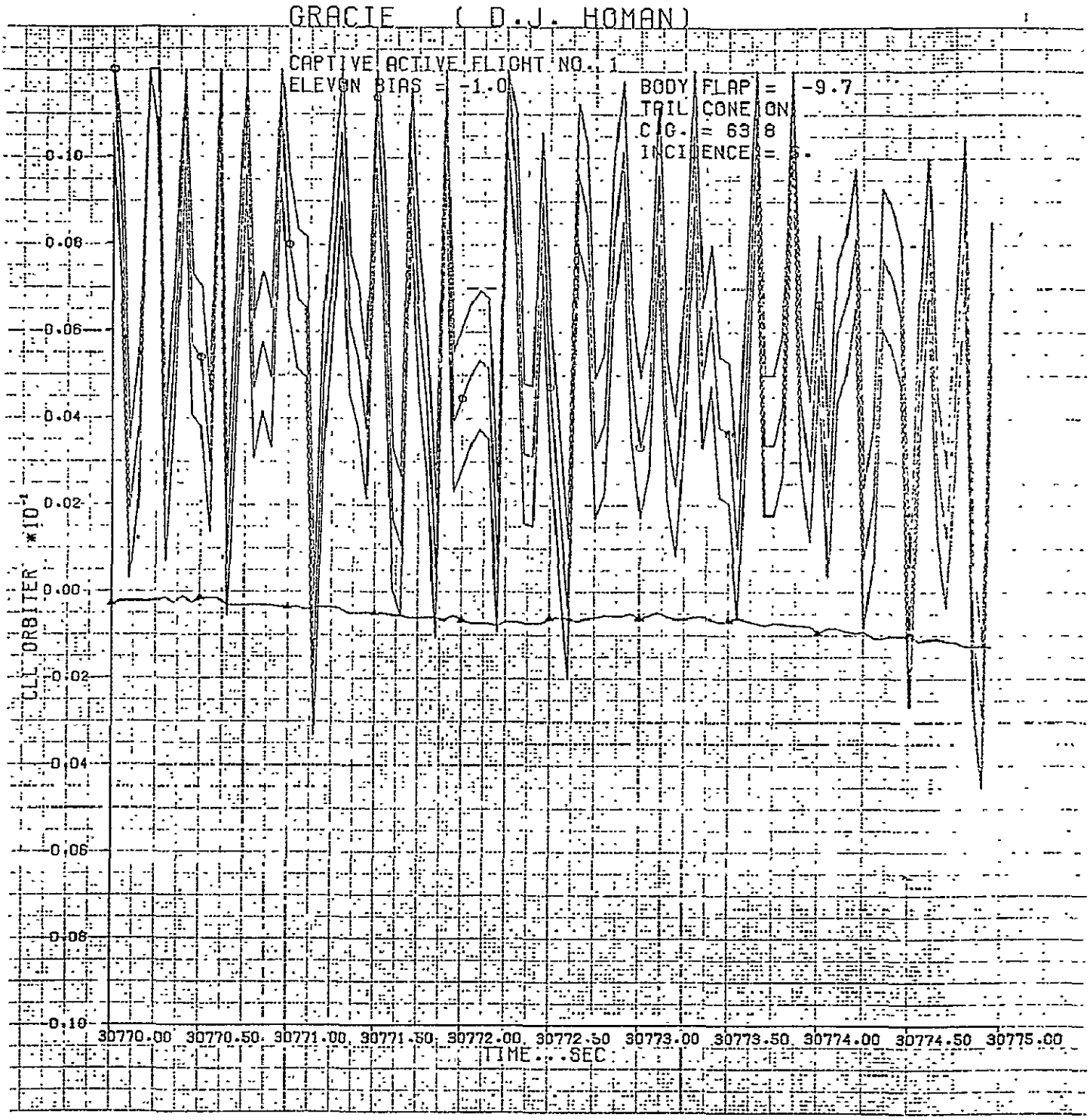
GRACIE (D.J. HOMAN)
CAPTIVE ACTIVE FLIGHT NO. 1
ELEVON BIAS = -1.0
BODY FLAP = -9.7
TAIL CONE ON
C.G. = 63.8
INCIDENCE = 5.
0.10
0.08
0.06
0.04
0.02
0.00
-0.02
-0.04
-0.06
-0.08
-0.10
CLL ORBITER *10⁻¹
30770.00 30770.50 30771.00 30771.50 30772.00 30772.50 30773.00 30773.50 30774.00 30774.50 30775.00
TIME...SEC

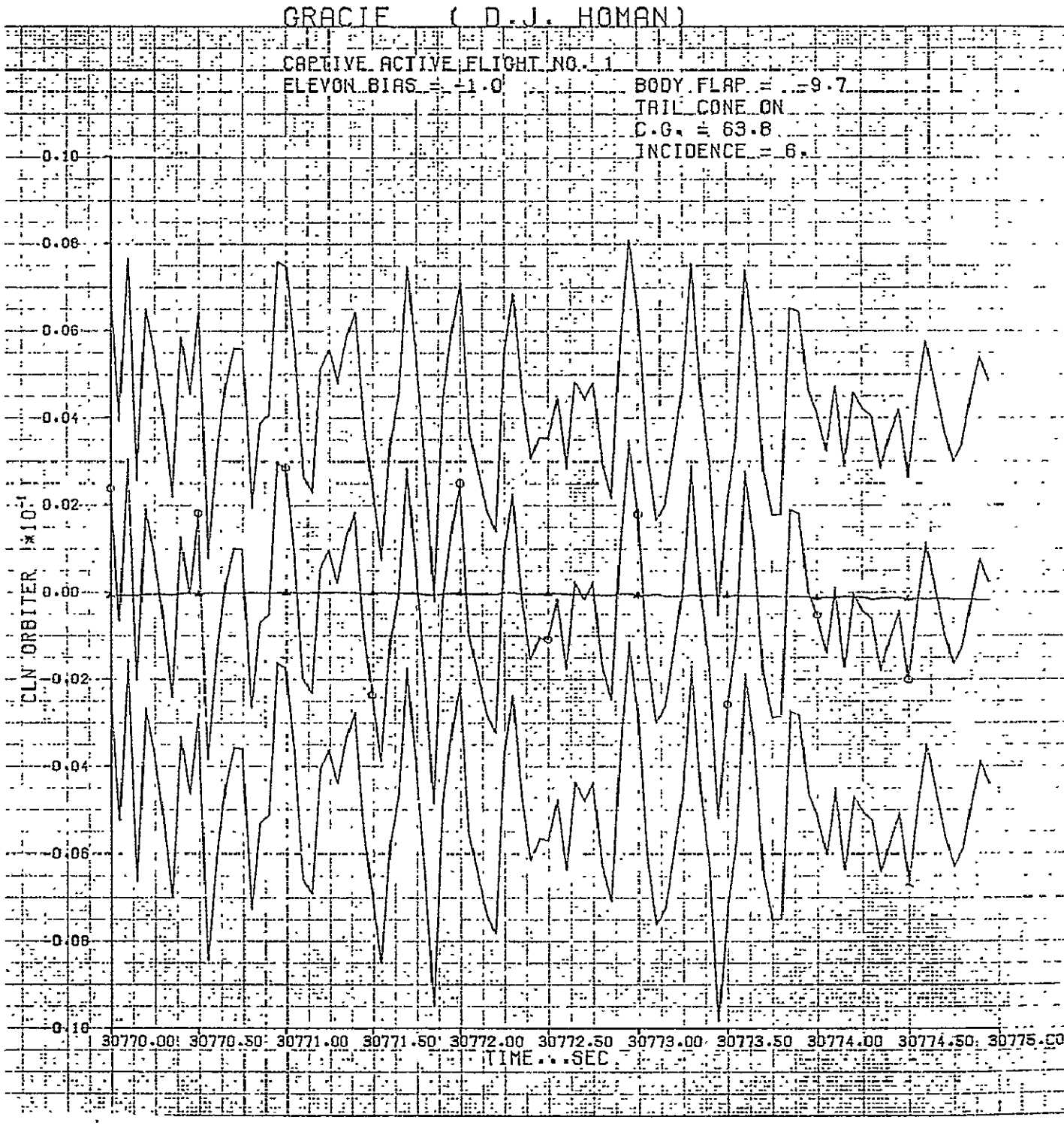
GRACIE (D.J. HOMAN)
CAPTIVE ACTIVE FLIGHT NO. 1
ELEVON BIAS = -1.0
BODY FLAP = -9.7
TAIL CONE ON
C.G. = 63.8
INCIDENCE = 6.
0.10
0.08
0.06
0.04
0.02
0.00
-0.02
-0.04
-0.06
-0.08
-0.10
CLN ORBITER (*10⁻¹)
30770.00
30770.50
30771.00
30771.50
30772.00
30772.50
30773.00
30773.50
30774.00
30774.50
30775.00
TIME - SEC

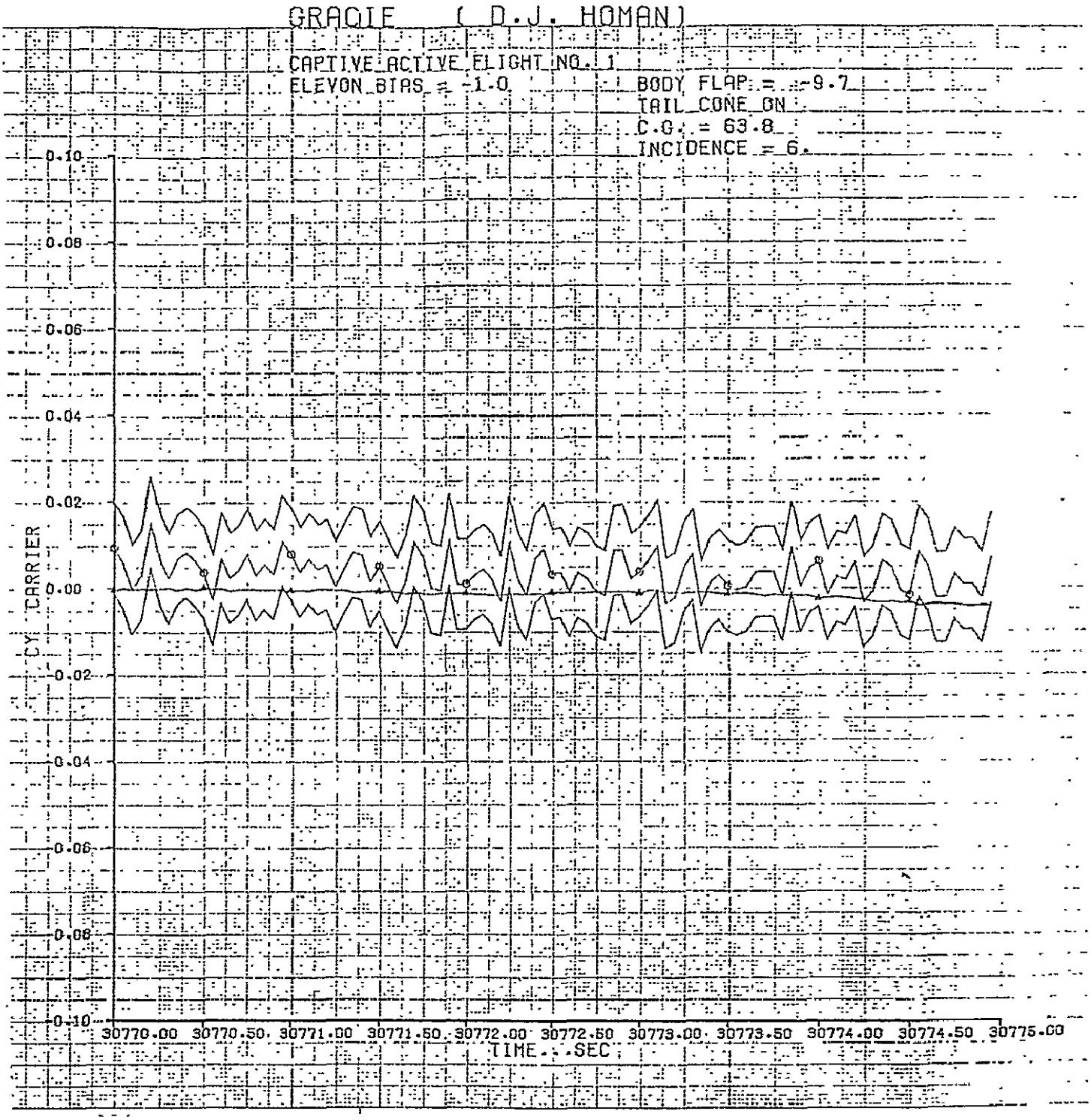
GRACIE (D.J. HOMAN)
CAPTIVE ACTIVE FLIGHT NO. 1
ELEVON BIAS = -1.0
BODY FLAP = -9.7
TAIL CONE ON
C.G. = 63.8
INCIDENCE = 6.
0.10
0.08
0.06
0.04
0.02
0.00
-0.02
-0.04
-0.06
-0.08
-0.10
CY CARRIER
30770.00
30770.50
30771.00
30771.50
30772.00
30772.50
30773.00
30773.50
30774.00
30774.50
30775.00
TIME - SEC

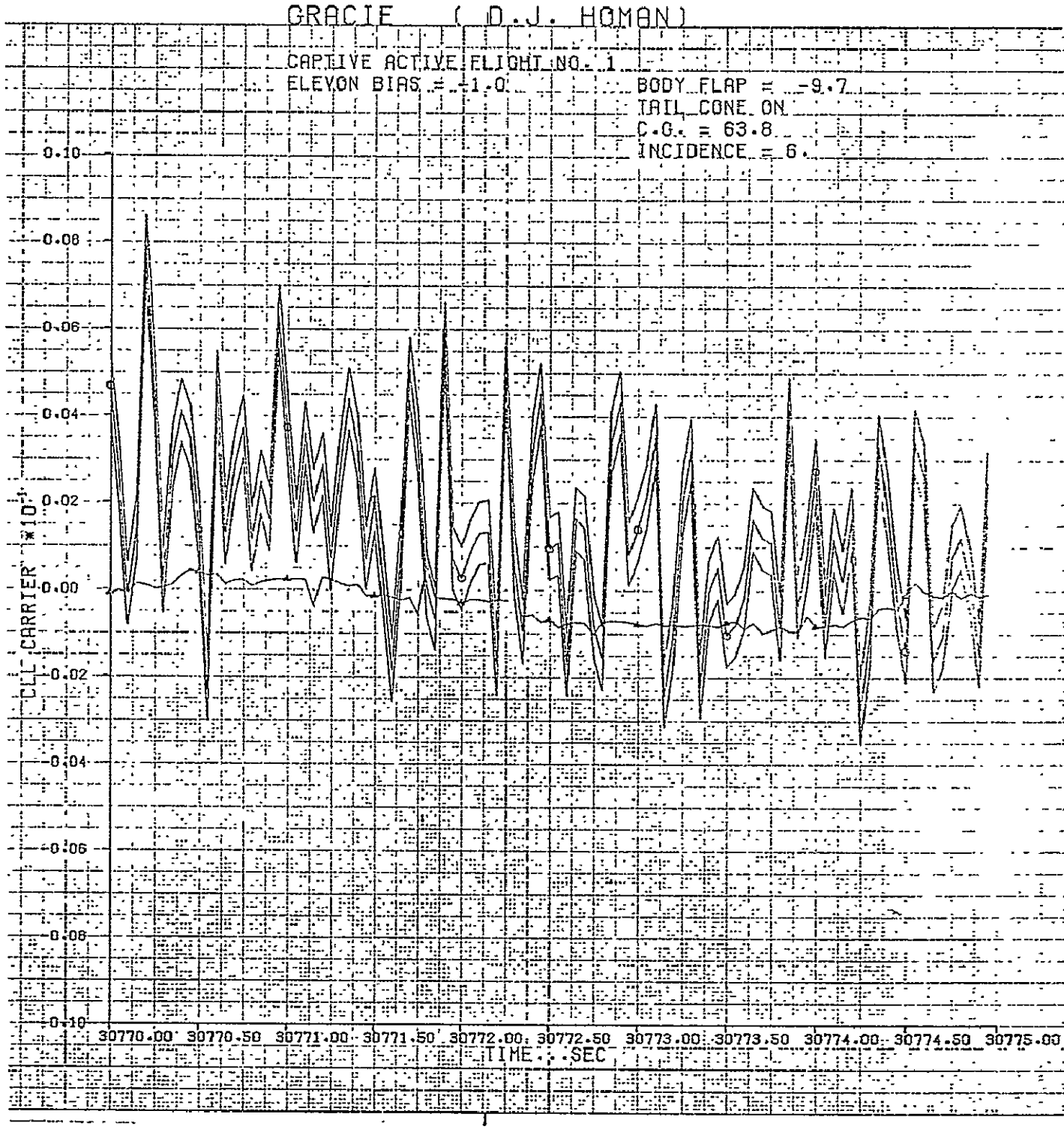
GRACIE (D.J. HOMAN)
CAPTIVE ACTIVE FLIGHT NO. 1
ELEVON BIAS = -1.0
BODY FLAP = -9.7
TAIL CONE ON
C.G. = 63.8
INCIDENCE = 6.
0.10
0.08
0.06
0.04
0.02
0.00
-0.02
-0.04
-0.06
-0.08
-0.10
CLL CARRIER *10
30770.00 30770.50 30771.00 30771.50 30772.00 30772.50 30773.00 30773.50 30774.00 30774.50 30775.00
TIME - SEC

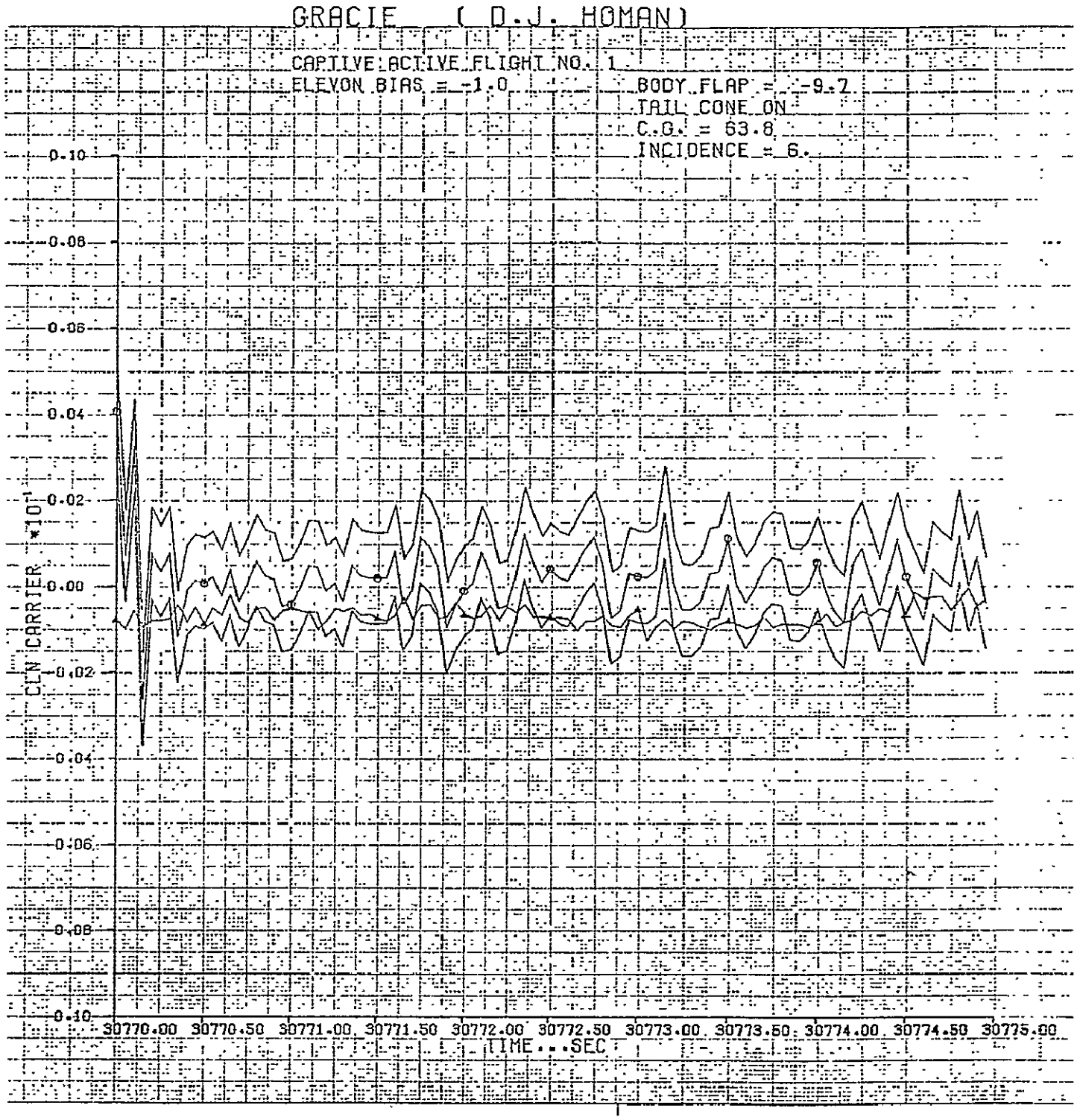
GRACIE (D.J. HOMAN)
CAPTIVE ACTIVE FLIGHT NO. 1
ELEVON BIAS = -1.0
BODY FLAP = -9.7
TAIL CONE ON
C.G. = 63.8
INCIDENCE = 6.
0.10
0.08
0.06
0.04
0.02
0.00
-0.02
-0.04
-0.06
-0.08
-0.10
CLN CARRIER *10
30770.00 30770.50 30771.00 30771.50 30772.00 30772.50 30773.00 30773.50 30774.00 30774.50 30775.00
TIME...SEC

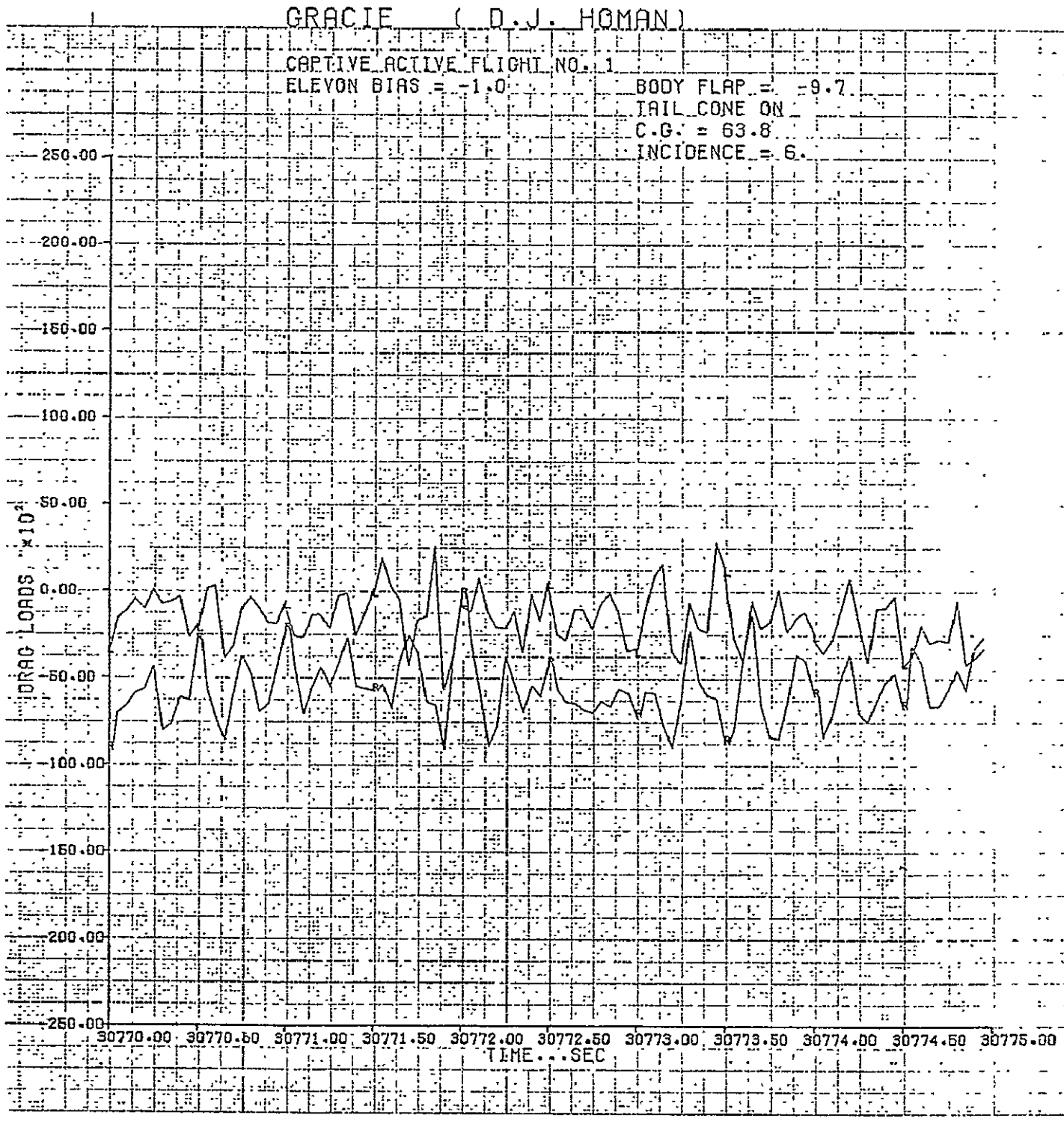
GRACIE (D.J. HOMAN)
CAPTIVE ACTIVE FLIGHT NO. 1
ELEVON BIAS = -1.0
BODY FLAP = -9.7
TAIL CONE ON
C.G. = 63.8
INCIDENCE = 6.
250.00
200.00
150.00
100.00
50.00
0.00
-50.00
-100.00
-150.00
-200.00
-250.00
DRAG LOADS, *10²
30770.00
30770.50
30771.00
30771.50
30772.00
30772.50
30773.00
30773.50
30774.00
30774.50
30775.00
TIME...SEC

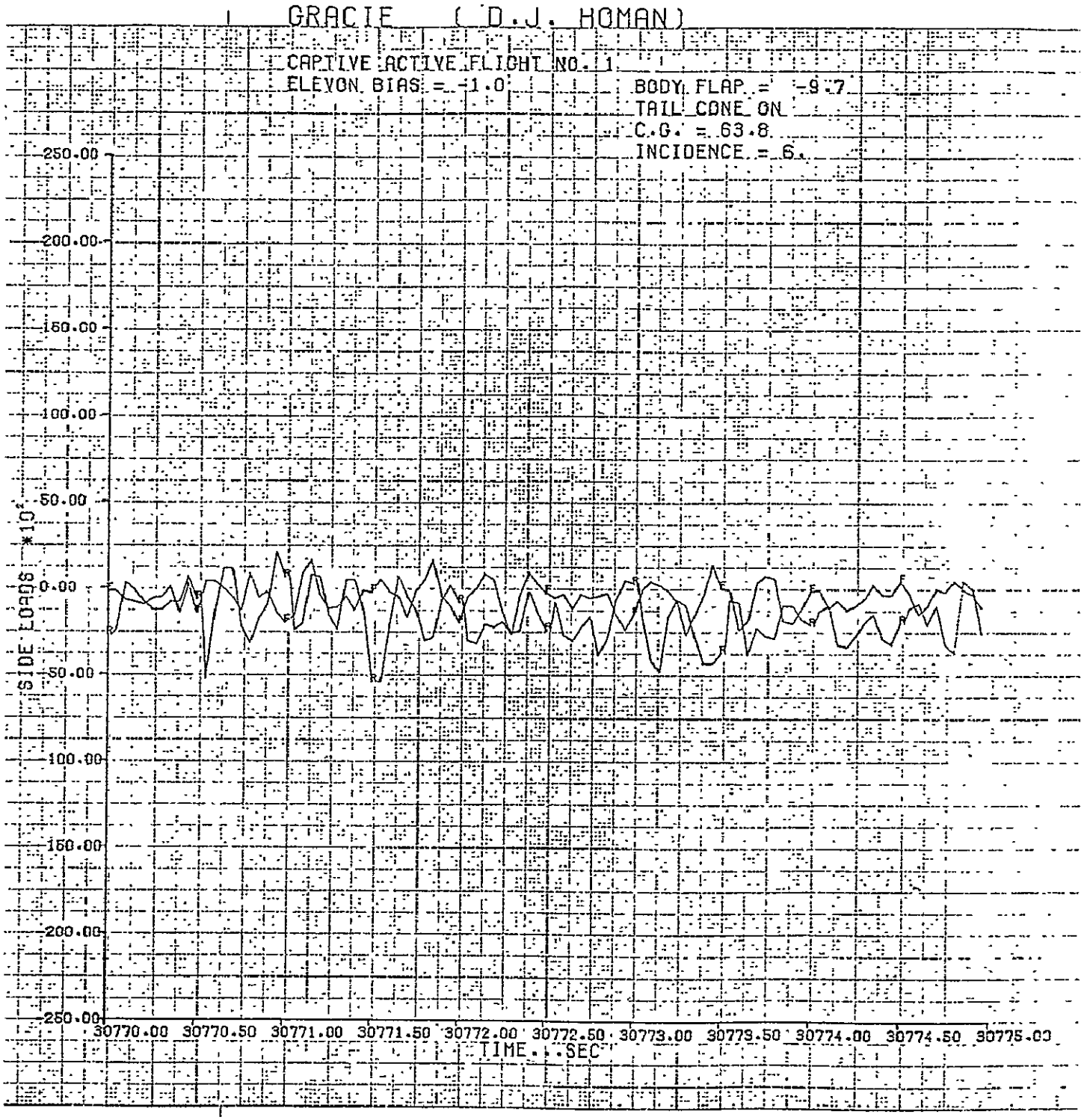
GRACIE (D.J. HOMAN)
CAPTIVE ACTIVE FLIGHT NO. 1
ELEVON BIAS = -1.0
BODY FLAP = -9.7
TAIL CONE ON
C.G. = 63.8
INCIDENCE = 6.
250.00
200.00
150.00
100.00
50.00
0.00
-50.00
-100.00
-150.00
-200.00
-250.00
SIDE LOADS *10
30770.00
30770.50
30771.00
30771.50
30772.00
30772.50
30773.00
30773.50
30774.00
30774.50
30775.00
TIME...SEC

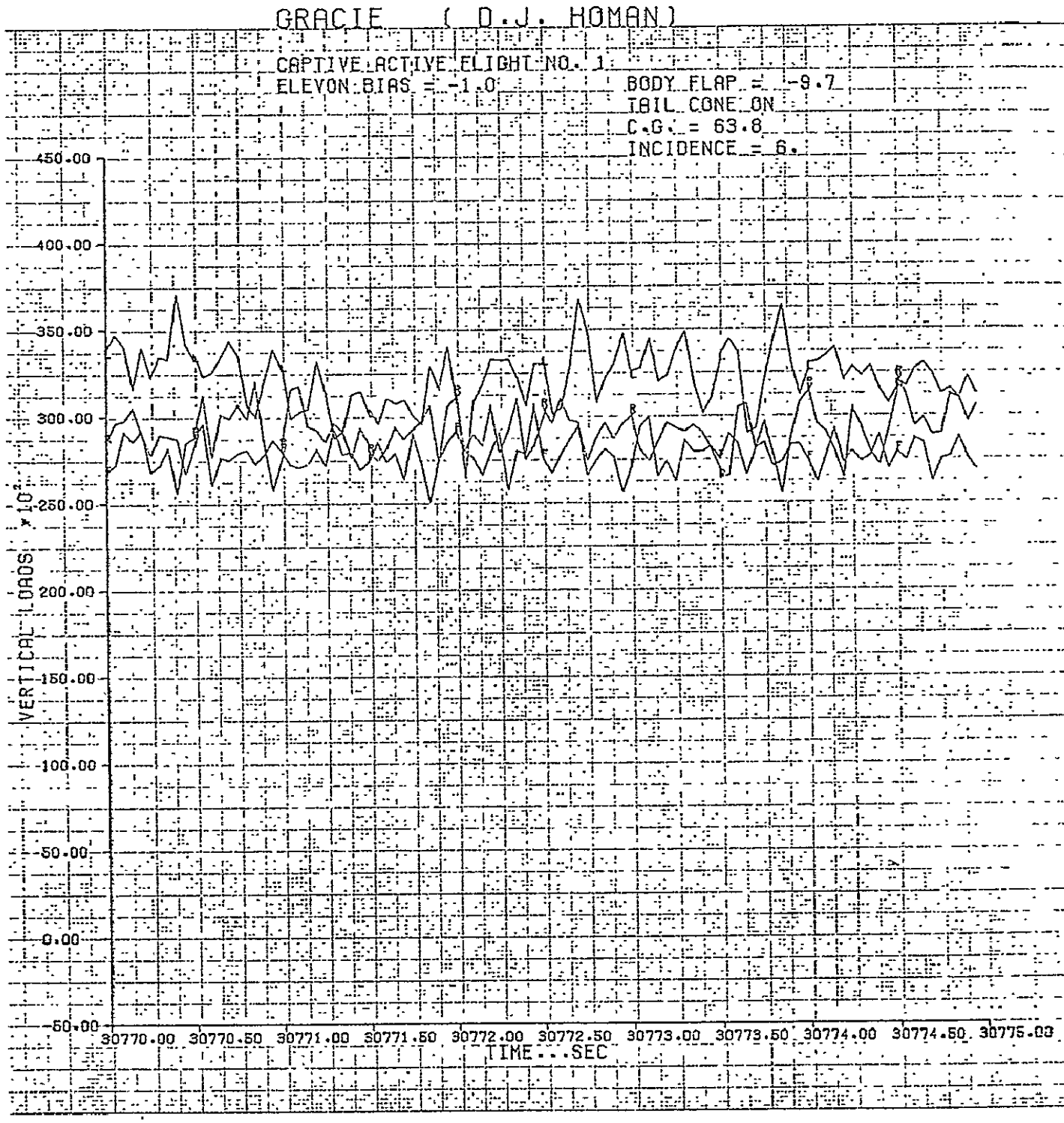

☆ U.S. GOVERNMENT PRINTING OFFICE: 1977 – 771-015/1741