General Disclaimer

One or more of the Following Statements may affect this Document

- This document has been reproduced from the best copy furnished by the organizational source. It is being released in the interest of making available as much information as possible.

- This document may contain data, which exceeds the sheet parameters. It was furnished in this condition by the organizational source and is the best copy available.

- This document may contain tone-on-tone or color graphs, charts and/or pictures, which have been reproduced in black and white.

- This document is paginated as submitted by the original source.

- Portions of this document are not fully legible due to the historical nature of some of the material. However, it is the best reproduction available from the original submission.

Produced by the NASA Center for Aerospace Information (CASI)

Final
Report

September 1977

Spacelab Contamination Assessment

(NASA-CR-150413) SPACELAB CONTAMINATION ASSESSMENT. PAYLOAD/ORBITER CONTAMINATION CONTROL REQUIREMENT STUDY Final Report (Martin Marietta Aerospace, Denver, Colo.) 44 p HC A03/MF A01 CSCL 22A G3/16

N77-33248

Unclas 49463

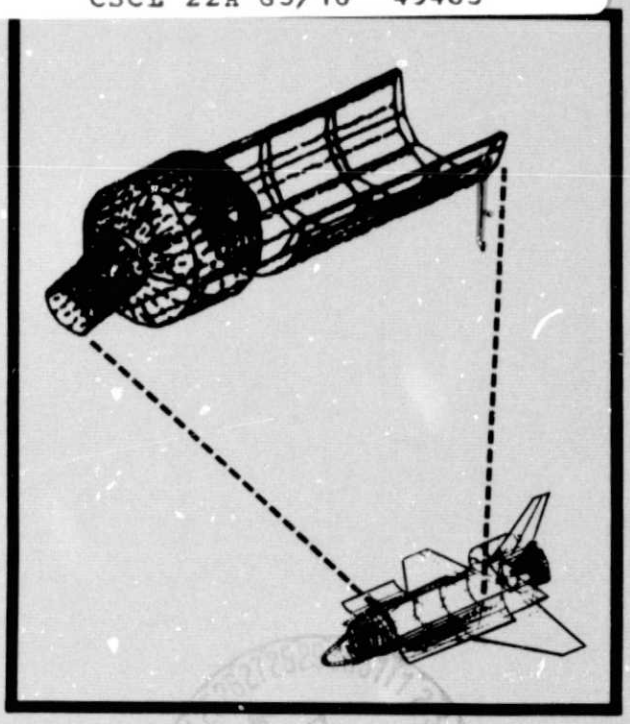

RECEIVED NASA STI FACILITY

MARTIN MARIETTA

MCR-77-105
September 30, 1977

TECHNICAL REPORT

SPACELAB CONTAMINATION ASSESSMENT

PAYLOAD/ORBITER CONTAMINATION CONTROL REQUIREMENT STUDY

FINAL REPORT

CONTRACT NAS8-31574 EXHIBIT B

AUTHORS

L. E. BAREISS
M. A. HETRICK
E. B. RESS

Prepared for

GEORGE C. MARSHALL SPACE FLIGHT CENTER
MARSHALL SPACE FLIGHT CENTER, ALABAMA 35812

by

MARTIN MARIETTA AEROSPACE, DENVER DIVISION
P. O. BOX 179, DENVER, COLORADO 80201

TABLE OF CONTENTS

		Page
Table of Contents		ii
1.	INTRODUCTION	1
1.1	Summary	2
2.	SPACE PROGRAM MODIFICATIONS	3
2.1	Model Structuring and Subroutine Integration	3
2.2	Model Input Data and Methodology Modifications	3
2.2.1	Spacelab Contamination Source Parameters	4
2.2.2	Spacelab Configurations	7
2.2.3	Program Methodology Improvements	9
3.	SPACE PROGRAM TRANSFER ACTIVITIES	13
3.1	Model Reconfiguration and Delivery	13
3.2	User Support and Training Activities	14
3.3	SPACE Program User's Manual	14
4.	UPDATED SPACELAB MOLECULAR INDUCED ENVIRONMENT PREDICTIONS	16
4.1	Molecular Number Column Density Predictions	16
4.2	Molecular Return Flux Predictions	18
4.3	Deposition Predictions	20
5.	UPDATED SPACELAB CONTAMINATION CONTROL CRITERIA EVALUATION	22
5.1	Induced Particulate Environment	22
5.2	Molecular Column Density	23
5.3	Molecular Return Flux	24
5.4	Background Brightness	26
5.5	Absorption Due to Condensible Deposition	26
5.6	Evaluation Summary	27
6.	ADDITIONAL STUDIES	31
6.1	First Spacelab Mission Payload Compatibility	31
6.2	SL-1 Payload Bay and Airlock Pressure Profile	33
7.	CONCLUSIONS AND RECOMMENDATIONS	37
7.1	Conclusions	37
7.2	Recommendations	38
8.	REFERENCES	40

TABLE OF CONTENTS (cont'd)

		Page
Figure		
1	MLI and Chemglaze II Mass Loss Rate Variation With Time	5
2	MLI and Chemglaze II Sticking Coefficient Relationships	7
3	Modeled Spacelab Lines-of-Sight	17
4	SL-1 Payload Bay Pressure Profile Point Locations	34
5	SL-1 Payload Bay Pressure Variation With Time	35
Tables		
I	Spacelab Nonmetallic Material Source Parameter Summary	6
II	Spacelab Molecular Number Column Density Predictions	19
III	Spacelab Molecular Return Flux Predictions	20
IV	Spacelab Molecular Deposition Predictions	21
V	Spacelab Contamination Control Criteria Evaluation Summary	28
VI	SL-1 Payload Sensitivity Summary	32

1. INTRODUCTION

The purpose of this report is to document the activities and the results obtained under Exhibit B of contract NAS8-31574, "Payload/Orbiter Contamination Control Requirement Study". The contract objectives were the development of the integrated Shuttle/Payload Contamination Evaluation computer model (denoted the SPACE Program) and subsequent delivery to Marshall Space Flight Center (MSFC); providing SPACE Program user training and support at MSFC and conducting Spacelab design and development analysis based upon the predicted Spacelab induced contaminant environments utilizing the SPACE Program.

Over eighty percent of the effort expended during this contract was dedicated to model development, delivery and user support. Included therein were: 1) the integration of the numerous segregated subroutines/subprograms developed under previous contracts into a coherent systems level contamination analysis program; 2) refinements to the modeling approaches and methodology; 3) conversion of the CDC version of the SPACE Program for execution on the MSFC UNIVAC 1108 computer system; 4) transfer and checkout of the SPACE Program on the MSFC system; 5) developing the program User's Manual and 6) training of MSFC personnel into the operation of the program. The additional areas of investigation undertaken during this contract included updating of the Spacelab carrier induced environment predictions and contamination control criteria evaluations; evaluations of Chemglaze II A-276 white paint as a pallet thermal control coating and Spacelab module multilayer insulation (MLI); development of preliminary payload bay and Spacelab airlock pressure profiles for the first Spacelab mission (SL-1) and Mission Integration Analysis for the SL-1 payload mix and mission profile.

This report covers only those activities conducted during the current contract period which have represented changes or additions to previous studies and techniques. It reflects, for example, the most recent Spacelab nonmetallic materials test data received from the European Space Agency (ESA) for the external Spacelab thermal control coatings. For detailed information concerning previous studies, reference should be made to contract reports MCR-75-202[1] and MCR-76-387[2]. In addition, a comprehensive description of the SPACE Program can be found in *The SPACE Program User's Manual*[3] (also written during this contract period) which contains detailed data on modeled configurations, contaminant sources, transport relationships, program

logic flow, subroutines and permanent data files.

The available data base required for Spacelab design evaluation and for SL-1 mission integration analysis remains incomplete in several important areas which must be considered in any future analysis. These include: 1) nonmetallic materials mapping of the Spacelab wire cabling for the modeled configurations; 2) outgassing test data for the cabling materials; 3) thermal profile data for the cable surfaces; 4) experiment vacuum vent effluent characteristics; 5) refined definition of the Spacelab condensate vent plume; 6) particle emission data for the Spacelab external surface materials and 7) SL-1 experiment contamination susceptibility, thermal profile and contaminant source data not included in the ESA supplied Experiment Requirements Documents. The lack of the above data has, in some cases, limited the degree to which Spacelab evaluations were conducted herein.

1.1 Summary - The primary items accomplished during this contract activity included:

- Development of an integrated Spacelab/Orbiter contamination evaluation computer program;
- Refinement of the program physics/methodology;
- Delivery of the computer model and checkout at MSFC;
- Development of the program User's Manual;
- Training and support of MSFC personnel;
- SL-1 mission integration/analysis activities; and
- Spacelab carrier design and development studies.

The primary conclusion that can be drawn from this study is that the predicted Spacelab induced contaminant environment levels have improved significantly as a result of the ESA supplied Spacelab nonmetallic materials test data, and although some of the identified Spacelab contaminant sources continue to exceed the existing contamination control criteria, the intent can be met through proper operational controls such as selection of orbital altitude, vehicle attitude and event timelining or through payload provided protective devices. In addition, it can be concluded that Spacelab/payload contamination mission analysis should be continued to insure that mission objectives are not compromised by the induced environment.

2. SPACE PROGRAM MODIFICATIONS

2.1 Model Structuring and Subroutine Integration - The SPACE Program was completely reconfigured during this contract into an integrated systems level contamination analysis computer model capable of simultaneously evaluating the induced on-orbit molecular environment of the Shuttle Orbiter and Spacelab vehicles for all major contaminant sources and transport phenomena. The results of the extensive model restructuring are documented in detail in Reference 3. Basically this activity involved the overlay integration of the separate Spacelab and Orbiter contamination evaluation subroutines such as mass column density, return flux, etc. and the development of the SPACE Program executive routine which, through user input control, commands proper overlay selection and program execution for any given model run.

The program has been designed to operate from internally stored data that represents the best available nonmetallic materials mass loss characteristics, geometric configurations and Spacelab/Orbiter external surface temperature profiles. In addition, the user has the option of overriding these data with modified information, if desired. There are approximately thirty control flags that can be used in the executive portion of the model to select various types of contamination analysis. For a typical run, normally only a few of these flags need be exercised. Through use of TRUE/FALSE control parameters, the user can define the configuration (Orbiter and/or Spacelab) and the lines-of-sight to be analyzed as well as the physical phenomena to be considered. Up to 300 surface sources and 50 concentrated sources such as engines and vents can be considered. This allows the analyst to evaluate the complete Orbiter/Spacelab configuration simultaneously. The SPACE Program, as currently configured, has a core requirement on the MSFC UNIVAC 1108 computer system of $116,100_8$ ($40,000_{10}$), and typical model runs consume between 50 seconds and 500 seconds of total computer time depending upon the options exercised.

2.2 Model Input Data and Methodology Modifications - During this contract period, several items of new or updated Spacelab design, operational and test data were obtained from ESA and NASA MSFC - some of which were integrated into the Spacelab contamination modeling and analysis activities. These included modifications to the Spacelab configurations, updated Spacelab temperature profiles and, probably most significant, nonmetallic materials test data for the two major Spacelab

external coatings. In addition, several segments of the SPACE Program were modified and/or expanded to reflect the model improvements presented in Reference 2. These data and program modifications are discussed in the ensuing subsections.

2.2.1 Spacelab Contamination Source Parameters - The ESA design of the external Spacelab thermal control system has apparently been finalized and isothermal total mass loss/volatile condensible material (TML/VCM) test data on the chosen nonmetallic materials has been supplied by ESA. This data was analyzed and used to update the outgassing and early desorption source parameters for Spacelab design evaluation. The current Spacelab passive thermal control system design incorporates Chemglaze II A-276 white paint (Hughson Chemical Company, Erie, Pennsylvania) as the thermal control coating for all internal and external pallet surfaces and multilayer insulation (MLI) manufactured by Aeritalia as the thermal blanket for the module and tunnel sections of Spacelab.

ESA thermal vacuum test data on these materials is contained in References 4 and 5, respectively. Figure 1 depicts the variation of Chemglaze and MLI TML rates and outgassing rates as a function of vacuum exposure time at a test temperature of 80°C. Outgassing rates for these materials were determined from the % VCM data for the -75°C Quartz Crystal Microbalance (QCM) by assuming that the sticking coefficient of the large molecular weight outgassing species was unity at that temperature. Chemglaze II % VCM data[4] was presented as total % VCM for the entire 165 hour test, therefore, only the average outgassing rate could be determined. In contrast, % VCM data on the MLI[5] was presented in terms of % VCM $\cdot$ s^{-1} and the MLI outgassing decay curve could be established. This data represents a significant variation over the assumed mass loss rates used in previous Spacelab contamination analysis reports[1,2]. Table I presents a summary of the updated Spacelab nonmetallic materials source parameters based upon the ESA test data as compared to those previously used.

By utilizing the ESA obtained % VCM data at differing QCM temperatures, the outgassing component sticking coefficient variation with temperature was approximated for the MLI and Chemglaze II coatings. Again by assuming that the sticking coefficient approaches unity at -75°C, sticking coefficients at other temperatures are simply the ratios of the % VCM at temperature T_c over the % VCM at -75°C. Figure 2 presents the sticking coefficient variation with collector temperature, T_c,

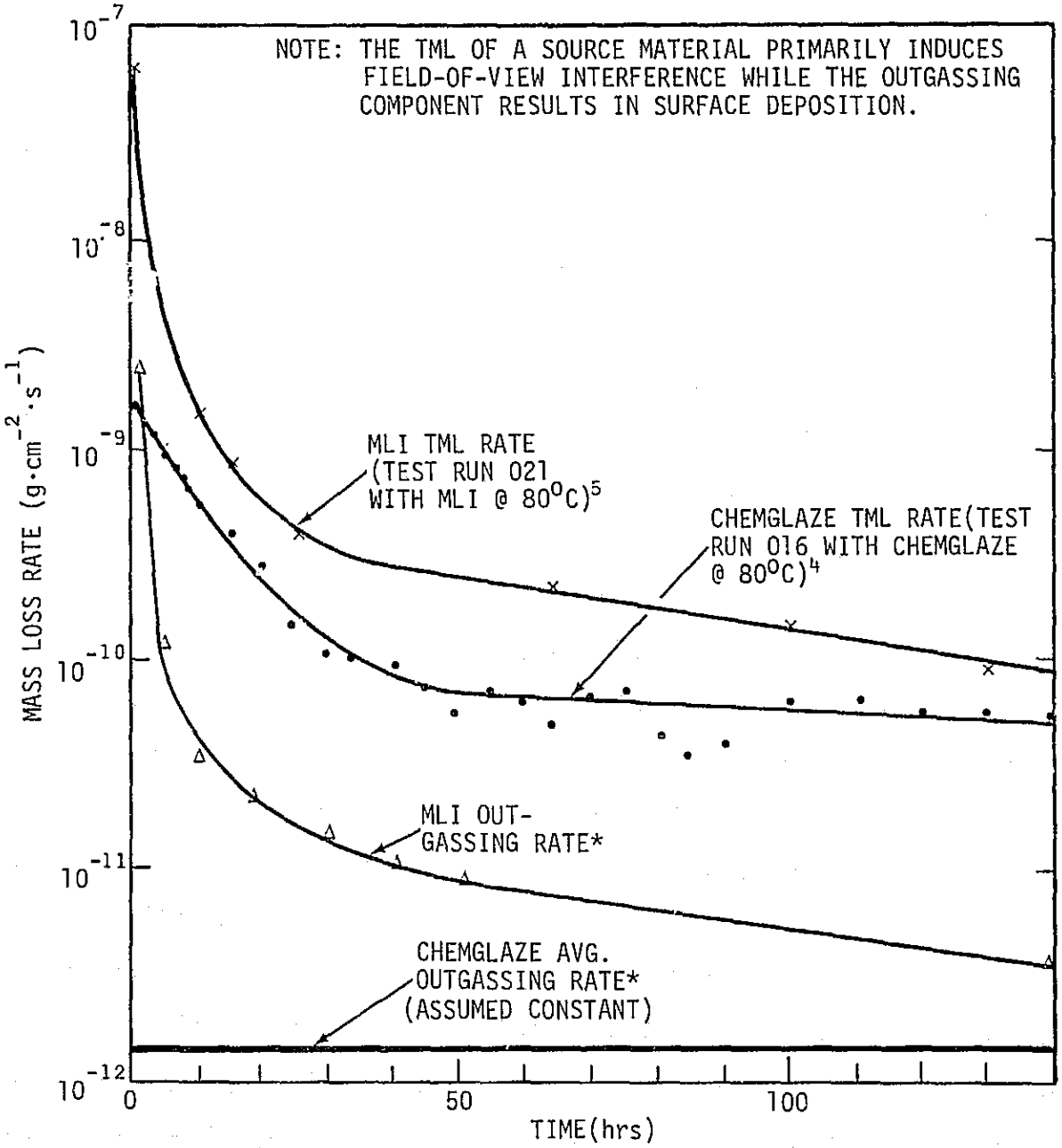

*BASED UPON %VCM TEST DATA AT -75°C COLLECTOR TEMP. AND 80°C SOURCE

Figure 1. MLI and Chemglaze II Mass Loss Rate Variation with Time

Table I. Spacelab Nonmetallic Material Source Parameter Summary

PARAMETER \ MATERIAL	ALL SURFACES-PREVIOUS ANALYSIS[1,2]	CHEMGLAZE II[4]	MLI[5]
Avg. Outgassing Rate at 125°C (OGR_{125} in $g \cdot cm^{-2} \cdot s^{-1}$)	1.4×10^{-8}	1.33×10^{-11}	1.29×10^{-9}
Temp. Dependence-Outgassing (T = source temp. in °C)	$OGR_{100} \cdot EXP(T - 100)/29$	$OGR_{125} \cdot EXP(T - 125)/20$	$OGR_{125} \cdot EXP(T - 125)/11$
Initial Early Desorption Rate at 100°C (EDR_{100} in $g \cdot cm^{-2} \cdot s^{-1}$)	1.5×10^{-7}	3.5×10^{-9}	1.24×10^{-7}
Time Dependence-Early Desorption (t = time in hours)	EXP(-t/18)	EXP(-t/10) ($0 \le t \le 40$) EXP(-t/100) ($40 \le t \le 170$)	EXP(-t/3) ($0 \le t \le 15$) EXP(-t/70) ($15 \le t \le 170$)
Temp. Dependence-Early Desorption (T = source temp. in °K)	$EDR_{100} \cdot EXP \frac{E}{R}\left[\frac{1}{373} - \frac{1}{T}\right]$ where $E = 7500$ cal.·mole^{-1}		

for MLI and Chemglaze II held at $T_s = 80°C$. Superimposed on Figure 2 is the Skylab derived sticking coefficient relationship used in previous analyses for comparison.

The other identified major Spacelab contaminant sources (i.e.; cabin atmosphere leakage, the Spacelab condensate vent and the experiment vacuum vent) have not changed significantly over previous reports and, therefore, no modifications were made in their evaluations. Dornier test data on the condensate vent system[6] indicates that plume impingement upon Spacelab and Orbiter structural surfaces has been minimized (i.e., the plume half angle is now approximately 22°). However, the plume distribution data supplied is far too empirical to develop analytical relationships for input to the SPACE Program. (Note: Mass transport factors for the Spacelab condensate vent have been precalculated and are currently a part of the SPACE Program input data files. Once adequate plume distribution data is made available, its contamination impacts can be easily evaluated through proper SPACE Program input commands).

Vent plume parameters of the experiment vacuum vent are dependent upon the characteristics of the experiment utilizing the system. Therefore; each experiment requires individual

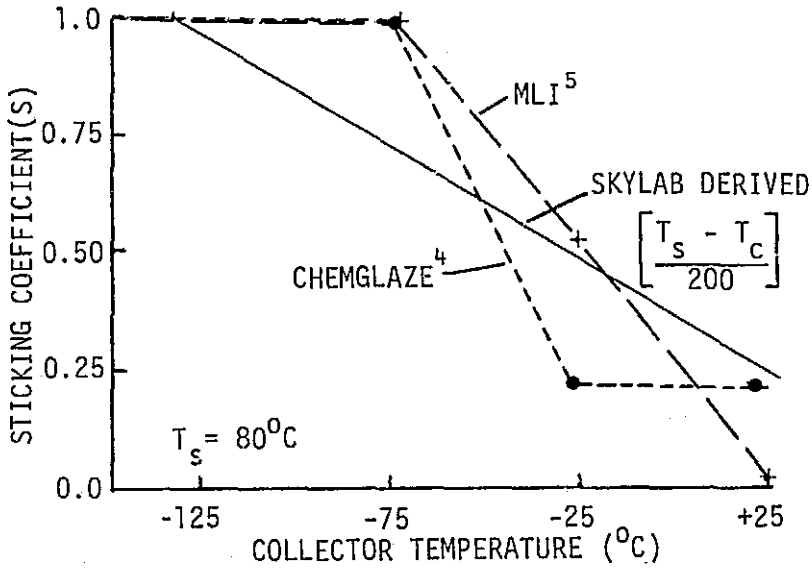

Figure 2. MLI and Chemglaze II Sticking Coefficient Relationships

analysis. Pressures, densities, temperatures and emitted species for most of the proposed Spacelab experiments are currently unknown although in reviewing "typical" Spacelab payloads using the experiment vent, emitted contaminant quantities and their ultimate impacts are negligible when compared with the other Spacelab contaminant sources. As the experiment data becomes available, further evaluation will be necessary.

2.2.2 Spacelab Configurations - The Spacelab configurations currently in the SPACE Program were left essentially unchanged during this period. Reference 3 should be consulted for details of the Spacelab geometry as currently modeled. Several changes and updates were made to the Spacelab configurations which, although they are not reflected in the SPACE Program, should be mentioned. These include:

a. The Spacelab forward cone module tent was baselined during this period. This modification changed the silhouette of the forward cone area and in turn modified the contaminant mass transport factors from that region. Analysis of the impact of the recent addition of the tent structure to the forward dome of the module to the Spacelab induced environment predictions indicated that the influence would be minimal. Therefore, in light of the additional manpower and computer requirements involved in recalculating the Spacelab mass transport factors to lines-of-sight and surfaces

of interest, the decision was made to forego modification until such time as it was better warranted.

b. The Spacelab internal pallet vent system underwent minor redesign during this period. This system allows blowdown and repressurization of the internal pallet volume during launch and reentry and allows the outgassing and early desorption products from the internal surfaces to escape to space during on-orbit operations. The new design permits continual flow of internal contaminants through open holes cut in the forward and aft ends of each pallet segment. The internal contaminant emitting surfaces (coated with Chemglaze II A-276 as discussed in subsection 2.2.1) and the pallet vent ports are not currently in the SPACE Program. This contribution is handled analytically for Spacelab design and development studies by assuming that the internally coated surface area is approximately twice that of the external pallet surfaces and that its contamination emission pattern is equivalent to the external surfaces. This simplified approach tends to worst case the Spacelab pallet contamination analysis; however, it is sufficiently accurate for valid results.

c. Due to experiment field-of-view requirements of the first Spacelab mission (SL-1) pallet mounted payloads, NASA is developing a hybrid pallet platform which will raise the payload mounting positions above the floor plane of the ESA pallet. This modification to the standard pallet configuration will alter the induced contaminant environment characteristics of the SL-1 vehicle which should be considered in the SL-1 mission evaluation. Since this is a mission/payload dependent modification to the Spacelab configuration, it was not incorporated into the SPACE Program.

d. Limited data was received from ESA during this period which indicated that the total surface area of the Spacelab nonmetallic wire bundles varies from approximately 4 m^2 to 17 m^2 depending upon the number of pallets employed. This source was not evaluated since materials mapping, outgassing test and thermal profile data are required prior to input to the SPACE Program. The impact of this contaminant source to the induced Spacelab environment is expected to be small due to its small area percentage, but upon receipt of the

of the required location/configuration, outgassing and thermal profile data, it should be evaluated by the SPACE Program.

2.2.3 Program Methodology Improvements - Numerous model improvement studies were conducted during the previous Spacelab contamination modeling and analysis contract which were reported in Reference 2. Those model improvements which were determined to be feasible were completed, integrated into the SPACE Program and checked out during this contract period. The resulting added model capabilities are discussed below:

a. Return Flux to Large Field-of-View Surfaces - The SPACE Program now has the capability to calculate the return flux of contaminant molecules resulting from collisions sions with the ambient atmosphere or with other contaminant molecules to a surface having any geometric acceptance angle up to 2π steradians. In addition, the program user has the option of varying the ambient drag vector orientation and the orientation of the receiving surface anywhere within the viewing volume selected.

b. Self-scattering of Contaminant Molecules - A technique for determining the self-scattering return flux of contaminant molecules through their collisions with other contaminant molecules based upon the assumptions by Robertson[7] has been integrated into the SPACE Program. Due to the simplifying assumptions employed, the approach inherently demonstrates some limitations in accuracy; however, with this model option the user has the ability to approximate the self-scattering return flux levels for complex configurations and sources.

c. Mean Free Path Influence upon Molecular Column Density - Through proper program input manipulation, the attenuation of molecular column density (MCD) due to the influence of contaminant molecule mean free path within the ambient atmosphere flux can be determined. The approach tends to least case the MCD predictions by utilizing the attenuation expression

$$F_\lambda = F_o \, e^{-R/\lambda}$$

where,

F_λ = contaminant flux with ambient attenuation ($g \cdot cm^{-2} \cdot s^{-1}$),

F_o = unattenuated contaminant flux ($g \cdot cm^{-2} \cdot s^{-1}$),

R = distance from source (cm) and

λ = mean free path (cm).

Its limitations include the imbalance of mass that results from considering the amount of mass that is scattered out of a line-of-sight while assuming that no mass is concurrently scattered into the line-of-sight by the same process. This model option does, however, provide the user with the ability to determine worst and least case MCD predictions.

d. Ambient Atmosphere Density Data File (AADDF) - The AADDF developed from existing literature[8] was integrated into the SPACE Program as permanent block data along with the appropriate control logic which allows the user to select an orbital altitude (between 105 and 2500 km) and a solar activity (sunlit/high solar activity, medium or darkside/low sunspot activity) for ambient density determination utilized in return flux calculations. The control logic performs straight-line interpolation between fixed point AADDF orbital altitudes to determine densities at intermediate altitudes. This subprogram streamlines the model input requirements for return flux predictions.

e. Molecular Diameter Data File (MDDF) - The MDDF was developed and coded into the SPACE Program for determination of scattering cross sections during the collision processes between contaminant molecules and ambient or other contaminant molecules. The MDDF block data contains equivalent molecular diameters determined from viscosity[9] for all contaminant and ambient molecules currently addressed within the program. This data when input to the expression

$$\sigma_{1-2} = \frac{\pi}{4} \left[\mu \left[\delta_1 + \delta_2 \right] \right]^2$$

where,

σ_{1-2} = scattering cross section for collision between molecules 1 and 2 (cm^2),

μ = velocity factor (function of collision velocity-unitless) and

δ_1 & δ_2 = molecular diameters of molecules 1 and 2 (cm)

is used to determine the scattering cross section for any interacting pair of colliding molecules in the calculation of ambient or self-scattering return flux.

f. Second Surface Sources - The SPACE Program has the added capability of calculating the contributions to the induced environment resulting from the reemission of contamination after its initial impingement upon spacecraft surfaces (i.e., second surface sources). This subroutine, integrated into the SPACE Program during this period, allows the user the option to select any surface or combination of surfaces as second sources for impinging contaminants from such sources as engines, vents and nonmetallic materials outgassing. The model calculates the surface impingement rates from these primary sources, determines sticking characteristics at the surface and subsequently predicts the Lambertian reemission to adjacent surfaces or to locations of interest in space.

g. Point Selector Routine - Through integration of this routine into the SPACE Program, the user can select any arbitrary line-of-sight within the hemispherical volume above the Spacelab/Orbiter vehicle for MCD calculations. Any angle off of the +Z axis (within $\pm 90^{\circ}$) and any line-of-sight origin point can be evaluated through proper input commands. This is accomplished through linear interpolation among the matrix of fixed points within the hemispherical volume for which precalculated mass transport factors exist in permanent file, and eliminates the previous restrictions of seventeen fixed lines-of-sight originating at the prime measurement point (PMP) at $X_o = 1107$, $Y_o = 0$ and $Z_o = 507$.

h. Temperature Profile Updates - Orbiter nodal temperature profiles were updated to be compatible with the orbital attitudes in permanent files for the Spacelab

configurations. Data for the maximum hot case and minimum cold case attitudes was obtained from Reference 10. In addition, the SPACE Program was configured to accept five additional orbital attitude temperature profiles simultaneously for complex mission profiles. Updated temperature profile data was also received from NASA for the SL-1 long module/one pallet Spacelab configuration; however, the relatively small differences over previous data did not warrant adjustment of the SPACE Program permanent file data.

3. SPACE PROGRAM TRANSFER ACTIVITIES

3.1 Model Reconfiguration and Delivery - Subsequent to completion of the aforementioned model development and improvement activities, the SPACE Program was converted from a CDC 6500 format for which it was written to a format compatible with the MSFC UNIVAC 1108 computer system. This activity involved shortening of program word lengths, modifying Hollerith statement formats, DO loop index alteration, modification of mass storage commands and reference method verification. Subtile differences in system operations such as the UNIVAC maximum and minimum limits on exponent values in the calculational train were investigated and program adjustments were made where necessary.

The delivery of the SPACE Program to MSFC was conducted in two phases. The initial phase involved the transfer of an interim model to MSFC primarily for system interface verification and to acquaint the responsible MSFC personnel with the mechanics and format of the program. Transfer of the model was made via cards and magnetic tape. The interim model consisted of the model executive routine, the integrated calculational subroutines and limited block data for a single line-of-sight for one Spacelab/Orbiter configuration. Sample problems run on both the Martin Marietta CDC 6500 and the MSFC UNIVAC 1108 were utilized for verification of the interim model interface compatibility.

The final version of the SPACE Program was delivered to MSFC during May 1977. This version had all user input, calculational and output options operable. Due to the large volume of permanent file input data required for the three Spacelab configurations and the Shuttle Orbiter, CDC 800 bit per inch, binary coded decimal, seven track data tapes of the mass transport factor input data were transferred separately to MSFC for conversion to the UNIVAC 1108 format. Concurrent to the delivery of the SPACE Program, six sample problems contained in *The SPACE Program User's Manual*[3] plus eight additional sample problems were delivered to MSFC for model checkout and future user training activities. The fourteen sample problems were selected to exercise the major options of the model in various combinations in an attempt to expose unforeseen problems which might ultimately appear due to the subtile differences between the CDC and UNIVAC systems. Checkout of the SPACE Program was conducted during a three day working/interface meeting at MSFC, May 9 through 11, 1977. At that time, the model was placed on the MSFC UNIVAC 1108 system and checkout cases were run for model interface verification. Technical discussions were also

held with MSFC personnel on the physics and architecture of the model. Model utilization training was supplied to the appropriate personnel. Model operation was further demonstrated by simultaneously running identical test cases through the MSFC UNIVAC 1108/Tektronix CRT Terminal and through a briefcase phone-line terminal connected to the Martin Marietta CDC 6500 in Denver. Exact correlation of results was obtained. As a result of these activities, the SPACE Program is now fully operational on the MSFC UNIVAC 1108 computer system.

3.2 User Support and Training Activities - In the period following final delivery of the SPACE Program to MSFC, extensive training and correspondence was conducted with the MSFC and Computer Science Corporation (CSC) personnel responsible for the program operation at MSFC. This included such items as supporting the conversion of the Martin Marietta generated mass transport factor data tapes to UNIVAC 1108 format and user training into the operation, mechanics, capabilities and options of the SPACE Program. A primary goal of the user training activities was to insure that, as a minimum, all fourteen sample problems were properly executed by MSFC personnel to insure complete understanding of the program operation. This goal was achieved, and in the course of the activities model misunderstandings, misinterpretations and anomolies which arose were resolved and modifications were made to the SPACE Program where necessary.

3.3 SPACE Program User's Manual - Concurrent to the SPACE Program development and improvement activities, a detailed program User's Manual[3] was written which contains a complete documentation of the Shuttle/Payload Contamination Evaluation Computer Program. The major sections included therein are:

a. Program Description - modeled algorithms, configurations, sources, logic flow and subroutines;

b. Input - user options, preset block data and permanent files;

c. Output - data display options;

d. Sample Problems - problem descriptions, input and output examples;

e. Mission Simulation Approaches and

f. Program Limitations.

In addition, the User's Manual includes a complete listing of

the SPACE Program in update format, Spacelab/Orbiter configuration/surface input data and a summary of the methodology utilized in establishing the program parameters and analytical relationships therein. The User's Manual was submitted to MSFC concurrently with the transfer of the final SPACE Program.

All modifications made to the SPACE Program subsequent to the User's Manual delivery have been reflected in loose leaf change pages and will be submitted under separate cover to NASA at the conclusion of this contract.[11] Updates to the User's Manual also included those changes deemed necessary to facilitate understanding of the model methodology and operation. The User's Manual in conjunction with the appropriate change pages reflect the status of the SPACE Computer Program at contract conclusion.

4. UPDATED SPACELAB MOLECULAR INDUCED ENVIRONMENT PREDICTIONS

Through the use of the SPACE Program, updated molecular induced environment predictions were established for the three modeled Spacelab configurations (i.e.; long module/one pallet-LMOP, short module/three pallet-SMTP and five pallet-FIVP) and for the contaminant sources described in subsection 2.2.1. These predictions reflect the major model updates and modifications that have been discussed previously in subsections 2.1 and 2.2. The contaminant sources evaluated in detail in this section include nonmetallic materials outgassing, early desorption at 10 hours of vacuum exposure and cabin atmosphere leakage. The Spacelab condensate vent was not reevaluated herein since plume structural impingement has been minimized (subsection 2.2.1) and due to the condensate system's capability of holding condensate for up to seven days which will facilitate vent timelining. Although the experiment vacuum vent has been identified as an additional major contaminant source, sufficient supplemental design/test data is not yet available, and consequently the evaluation of this source has not been extended. The experiment vacuum vent must be evaluated on a "per experiment" basis since its contamination source characteristics are dependent upon the particular experiment using the vent facility. Interference with the operation of sensitive Spacelab payloads by these vent sources should easily be avoided through vent expulsion timelining around the data acquisition periods of payloads susceptible to the induced contaminant cloud and through employing protective measures such as operable covers and ambient drag vector avoidance by cryogenic payloads.

The induced environment predictions for the Spacelab configurations presented have been formatted to be compatible with the baseline contamination control criteria[12] as interpreted by the Contamination Requirements Definition Group (CRDG) at MSFC[13]. This criteria serves as the basis of the updated Spacelab contamination control criteria evaluation presented in Section 5 and for the recommendations included therein.

4.1 Molecular Number Column Density (NCD) Predictions - Seventeen fixed lines-of-sight for each Spacelab configuration are currently in the SPACE Program for which updated NCD predictions have been made. These lines-of-sight (illustrated for the SMTP in Figure 3) encompass the 120° conical viewing volume centered around the +Z axis above the Spacelab vehicle

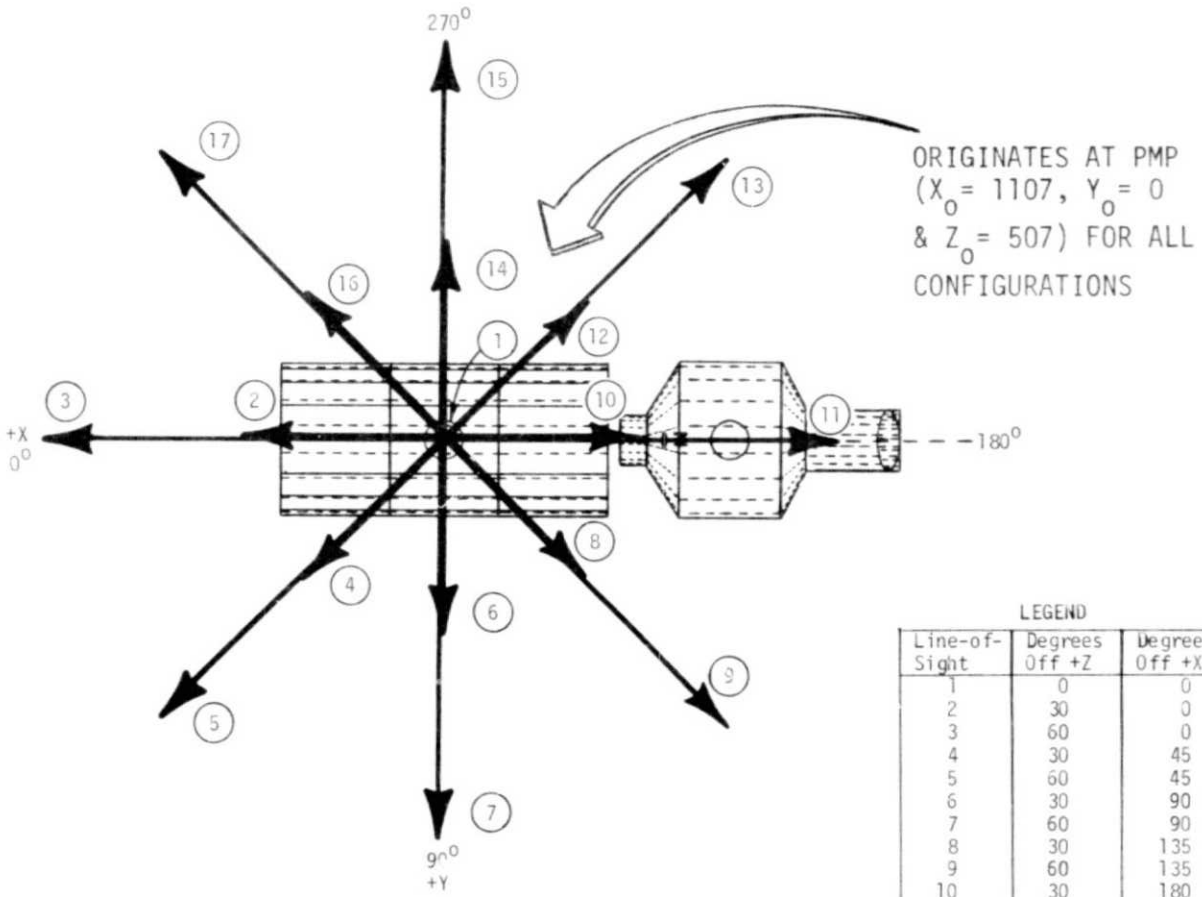

LEGEND

Line-of-Sight	Degrees Off +Z	Degrees Off +X
1	0	0
2	30	0
3	60	0
4	30	45
5	60	45
6	30	90
7	60	90
8	30	135
9	60	135
10	30	180
11	60	180
12	30	225
13	60	225
14	30	270
15	60	270
16	30	315
17	60	315

Figure 3. Modeled Spacelab Lines-of-Sight

originating at the CRDG Prime Measurement Point (PMP) at $X_o = 1107$, $Y_o = 0$ and $Z_o = 507$. These predictions are presented in Table II for the three modeled Spacelab configurations. Nonmetallic surface material mass loss predictions are based upon the maximum hot case Spacelab thermal profile data contained in Reference 14 and the ESA materials test data previously discussed. Due to insufficient configuration, materials test and thermal profile data for the Spacelab wire bundles, their contributions have not been considered. When such data is available, these sources should be evaluated in detail.

The primary concern of the NCD parameter is its propensity to scatter, emit or absorb radiant energy thus interferring with the data acquisition ability of sensitive optical experiments. The corresponding contaminant pressures in the proximity of high voltage power systems can also induce such phenomena as corona arc-over damage and multipacting of transmitting systems. The predicted NCD levels for outgassing and leakage will remain relatively constant throughout a Spacelab mission, however, the early desorption NCD levels will decrease rapidly as the early desorption rate decays with time of vacuum exposure. The primary contamination threats from early desorption will, therefore, be limited to the initial on-orbit phases of a given mission.

4.2 Molecular Return Flux Predictions - For most Spacelab payloads, the primary transport mechanism of the major contaminant sources will be the return flux resulting from contaminant molecular collisions with the ambient atmosphere flux. Direct line-of-sight and self-scattering return flux transport were evaluated and deemed negligible under the major Spacelab source conditions. All major Spacelab sources were evaluated for maximum return flux (i.e.; ambient drag vector perpendicular to surface of interest) to a 2π steradian field-of-view surface located at the PMP. The worst case orbital altitudes were considered for each source modeled (i.e., early desorption and leakage at 200 km and outgassing at 250 km) and medium solar activity was assumed. The resulting predictions are presented in Table III.

The main threat of molecular return flux is its ability to accommodate or stick to surfaces upon which it impinges thus absorbing radiant energy which scientific instruments are attempting to detect or modifying the thermal characteristics of surfaces to which it adheres. The constituents of early

Table II. Spacelab Molecular Number Column Density Predictions

SOURCE/ CONFIG. / LINE-OF-SIGHT	NUMBER COLUMN DENSITY (molecules·cm^{-2})							
	OUTGASSING			EARLY DESORPTION			LEAKAGE	
	LMOP	SMTP	FIVP	LMOP	SMTP	FIVP	LMOP	SMTP
1	1.9E8*	2.8E8	1.3E8	3.7E12	1.8E12	2.1E11	2.6E12	1.4E12
2	1.6E8	2.4E8	1.2E8	3.0E12	1.5E12	1.9E11	2.2E12	1.1E12
3	1.6E8	2.2E8	1.1E8	2.7E12	1.4E12	1.7E11	1.9E12	9.9E11
4	1.7E8	2.5E8	1.3E8	3.3E12	1.6E12	2.0E11	2.3E12	1.2E12
5	1.6E10	1.5E9	1.2E8	3.4E12	1.5E12	1.8E11	2.1E12	1.0E12
6	1.3E9	5.2E8	1.3E8	3.9E12	1.8E12	2.1E11	2.6E12	1.4E12
7	3.4E10	3.9E9	1.2E8	5.1E12	2.0E12	1.8E11	2.6E12	1.3E12
8	7.2E8	6.6E8	1.4E8	4,8E12	2.3E12	2.2E11	3.1E12	1.7E12
9	3.7E10	7.4E9	1.5E8	7.5E12	3.4E12	2.3E11	3.7E12	2.2E12
10	1.1E9	9.6E8	1.5E8	5.1E12	2.6E12	2.3E11	3.3E12	1.9E12
11	1.1E10	2.7E9	1.7E8	8.4E12	4.4E12	2.7E11	4.5E12	3.3E12
12	6.9E8	6.5E8	1.4E8	4.4E12	2.2E12	2.2E11	3.1E12	1.7E12
13	3.7E10	7.3E9	1.4E8	6.4E12	3.0E12	2.2E11	3.7E12	2.2E12
14	1.3E9	5.1E8	1.3E8	3.5E12	1.7E12	2.0E11	2.6E12	1.4E12
15	3.4E10	3.9E9	1.1E8	4.4E12	1.7E12	1.7E11	2.6E12	1.3E12
16	1.6E8	2.4E8	1.2E8	3.1E12	1.5E12	1.9E11	2.3E12	1.2E12
17	1.6E10	1.5E9	1.1E8	3.1E12	1.4E12	1.7E11	2.1E12	1.0E12

*1.9E8 = 1.9×10^8

Table III. Spacelab Molecular Return Flux Predictions

SOURCE/ ALTITUDE / CONFIGURATION	MAXIMUM RETURN FLUX-2π sr SURFACE (molecules·cm^{-2}·s^{-1})		
	OUTGASSING AT 250 km	EARLY DESORPTION AT 200 km	LEAKAGE AT 200 km
LMOP	8.7E11	5.0E14	4.1E14
SMTP	1.6E11	2.4E14	2.1E14
FIVP	1.4E10	2.4E13	——

desorption and cabin leakage return flux will demonstrate negligible dwell times on all surfaces other than those that are cryogenic. In contrast, outgassing species can condense on surfaces with temperatures of 25°C or warmer.

The optimum approach to decreasing the impacts of return flux upon sensitive surfaces is to minimize surface impingement or reduce its ability to stick. Impingement can be minimized through proper selection of materials with low early desorption rates, flying in attitudes where major contributing surfaces are cool, flying in attitudes where return flux is minimized, by the payloads supplying their own operable protective covers or in some cases by providing an inert gas purge system.

4.3 Deposition Predictions - Spacelab deposition predictions calculated by the SPACE Program were based upon the mission dependent parameters set forth in the CRDG interpretations[13] of the existing Spacelab contamination control criteria.[12] These parameters include condensible deposition on a 0.1 steradian surface at 300°K (27°C) located at the PMP subject to a random drag vector orientation for a seven day mission. Sticking coefficient data employed in the modeling was based upon the ESA TML/VCM test data discussed in subsection 2.2.1. Materials outgassing is the only identified Spacelab contaminant source that will accumulate in measurable quantities on a surface at 27°C, therefore, the deposition predictions which are presented in Table IV result from that source alone.

Table IV. Spacelab Molecular Deposition Predictions

PARAMETER / CONFIGURATION	DEPOSITION (0.1 sr surface, 250 km, 27°C)		
	RATE	ACCUMULATIVE - 7 DAY MISSION	
	(molecules·cm^{-2}·s^{-1})	(molecules·cm^{-2})	Å
LMOP	8.61×10^{7}	1.26×10^{13}	0.21
SMTP	1.69×10^{8}	2.47×10^{13}	0.41
FIVP	1.33×10^{8}	1.94×10^{13}	0.32

The deposition levels depicted in Table IV demonstrate a significant improvement over predictions previously made for the Spacelab vehicles in earlier contract reports.[2] Most of the reduction can be attributed to the Spacelab materials test results obtained by ESA and integrated into the SPACE Program. Although the predicted levels of outgassing deposition resulting from Spacelab carrier sources equate to less than one angstrom in thickness for a 0.1 steradian surface at the PMP at 300°K, deposition will still be of concern for certain payloads with differing configurations and temperature profiles.

5. UPDATED SPACELAB CONTAMINATION CONTROL CRITERIA EVALUATION

The induced environment predictions presented in the previous subsection in conjunction with supplemental analysis were utilized to determine the ability of the various Spacelab configurations to meet the existing contamination control criteria imposed upon Spacelab[12] and to establish Spacelab design and development requirements to insure that the criteria are satisfied. To accomplish this, each major Spacelab contaminant source was evaluated against the five criteria statements based upon the interpretations and assumptions sanctioned by the CRDG in Reference 13. In the ensuing subsections, each main criteria statement is presented as depicted in Reference 12. Each is then followed by the applicable CRDG interpretations and finally a detailed analysis of the Spacelab contaminant sources.

5.1 Induced Particulate Environment - *It is a design and operational goal for Spacelab to control in an instrument field-of-view particles of 5 microns in size to one event per orbit.* This assumes a field-of-view of 1.5×10^{-5} steradian and is restricted to particles within 5 km of the spacecraft.

In determining the induced particulate environment of a manned spacecraft such as the Spacelab carrier, known defined particulate sources like the Spacelab condensate vent (SCV) can be parametrically analyzed in a closed mathematical form by knowing the primary vent system characteristics (based upon existing system test data or detailed stream tube vent plume and freezing analysis) and integrating these into an appropriate particle trajectory analysis program. This was conducted for the SCV under a previous contract.[1] The acquired results indicate that this criteria statement can be exceeded during and for up to a minimum time increment of 17 minutes after SCV operation. Under this condition, the intent of the criteria can be met through timelining of the SCV overboard dump around operations of payloads that have been determined susceptible to particles in their field-of-view. Current planning is for the SCV to be operated only once per each seven days on orbit, therefore, noninterference timelining should create minimal problems.

In contrast to well defined controllable particulate sources such as the SCV, intermittent particulate sources (i.e., unpredictable surface/source random particle emission) present a more difficult analytical problem. This phenomena, too, was

evaluated under previous studies[2] which will not be reiterated herein. It suffices to restate that the current contamination control criteria as applied to random particulate emissions may be very difficult for the Spacelab carrier to meet based upon limited particle sighting data obtained during the Skylab Program by the S052 White Light Coronagraph experiment.

5.2 Molecular Column Density - *It is a design and operational goal for Spacelab to control induced water vapor column density to 10^{12} molecules·cm^{-2} or less.* This is measured along any vector within 60 degrees of the +Z axis originating at the Prime Measurement Point (PMP) (X_o = 1107, Y_o = 0 and Z_o = 507). It is further assumed that this represents the worst case situation.

The modeled sources which are of concern to meet the NCD criteria include the SCV, early desorption of externally exposed Spacelab surfaces and the leakage of cabin atmosphere from the pressurized Spacelab module/tunnel segments. No control is required for outgassing materials as stated by this criteria since this source is considered to contain no water constituents (i.e., the outgassing contaminant sources meet the NCD criteria statement).

The SCV exceeds the NCD criteria during its operation and must be timelined around the operation of those payloads deemed susceptible to water column densities greater than 10^{12} molecules·cm^{-2} in order that the intent of the criteria be met. Since this overboard dump is currently planned to occur only once each seven days on orbit, interference with payload operations should be minimal if properly timelined.

In the evaluation of the leakage contaminant source, the worst case line-of-sight prediction within 60 degrees of the +Z axis is for the LMOP line-of-sight 11 where the total NCD = 4.46×10^{12} molecules·cm^{-2} and the water vapor NCD = 7.14×10^{10} molecules·cm^{-2} (see Table II). This value is well within the criteria limits and, therefore, leakage is in compliance.

The final contaminant source, early desorption, demonstrates a maximum total NCD of 8.4×10^{12} molecules·cm^{-2} for the LMOP line-of-sight 11 at 10 hours into a mission. This equates to a 4.1×10^{12} molecules·cm^{-2} NCD for water vapor which exceeds the criteria limit. In order to meet the intent of the NCD criteria for early desorption, it will be necessary for the external Spacelab surfaces to demonstrate an average

early desorption rate (EDR) of less than 2.1×10^{-8} $g \cdot cm^{-2} \cdot s^{-1}$ at 100°C. This can be accomplished through selection of external materials having an EDR less than this value, through decreasing the total area of coverage of high early desorbing materials or by delaying data acquisition by susceptible instruments until the NCD levels for water vapor have decayed to less than 10^{12} $molecules \cdot cm^{-2}$. Based upon the ESA supplied materials test data, this delay time could be as high as 24 hours. This is highly dependent upon the thermal history of surfaces during that period, however, it is assumed that an average delay time of 24 hours will bring the early desorption NCD levels into compliance with the criteria.

5.3 Molecular Return Flux - *It is a design and operational goal for Spacelab to control return flux to* 10^{12} $molecules \cdot cm^{-2} \cdot s^{-1}$. This refers to the total flux on an unshielded surface (2π steradian acceptance) oriented in the +Z direction at the PMP under worst case situations.

The stated criteria applies to the summation of return flux from all contaminant sources with no specific stipulations on the separate constituent levels allowable. However, the ensuing evaluation accounts for the acceptable source levels to meet the criteria on an individual basis. It is realized that from a practical viewpoint that each source should be allowed only a budgeted percentage of the total. This same consideration should also be applied to the Orbiter sources (which are not accounted for herein) to budget between Spacelab and Orbiter source levels. However, for the basic Spacelab design and development analytical approach which has been previously acceptable, it is assumed that each source may have an allowable return flux level of 10^{12} $molecules \cdot cm^{-2} \cdot s^{-1}$ or less. It should be noted that if the design and operational recommendations in the ensuing paragraphs are followed, that the 10^{12} $molecules \cdot cm^{-2} \cdot s^{-1}$ total return flux criteria will inherently be met.

The molecular return flux levels experienced during SCV operation significantly exceed the stated criteria limits. Sensitive surfaces should be protected from return flux possibly by utilizing operable covers, if practical, while SCV dumps are in progress. Return flux could also be minimized through vehicle attitude selection which is not conducive to return flux during SCV operation. Ideally, such an attitude would place the ambient drag vector continually in the Spacelab +Z direction, thus reducing return flux to the PMP to almost zero.

The worst case Spacelab configuration for both outgassing and early desorption return flux to a 2π steradian surface at the PMP is the LMOP during the maximum temperature profile attitude (see Table III). The outgassing return flux prediction for the Spacelab LMOP under maximum ambient drag vector orientation is 8.7×10^{11} molecules$\cdot cm^{-2} \cdot s^{-1}$ at 250 km altitude. The LMOP return flux prediction therefore meets the criteria.

Utilizing a similar approach for early desorption, it was determined that the maximum LMOP return flux rate would be 5.0×10^{14} molecules$\cdot cm^{-2} \cdot s^{-1}$ based upon the 200 km altitude predictions. To meet the return flux criteria for early desorption, the EDR would have to be less than 9.22×10^{-11} $g \cdot cm^{-2} \cdot s^{-1}$ at 100°C assuming that all external Spacelab surfaces contribute. As in the case of early desorption compliance with the NCD criteria statement, the intent of the return flux criteria can be met for susceptible payloads if the exposure of their sensitive surfaces is delayed until such time that the early desorption return flux rate has decayed through vacuum exposure to an acceptable level (approximately 35 hours). If practical, susceptible surfaces should provide their own protective devices such as operable covers and the maximum ram vehicle attitudes should be avoided during the Spacelab early mass loss period. Selecting orbital altitudes above approximately 600 km would also reduce the return flux to an acceptable level.

Meeting the intent of the return flux criteria for cabin atmosphere leakage may be more difficult to achieve due to its continuous, uncontrollable characteristics. Predictions for the worst case Spacelab leakage configuration, LMOP, indicate a return flux to a 2π steradian surface at the PMP of 4.1×10^{14} molecules$\cdot cm^{-2} \cdot s^{-1}$ at 200 km altitude which exceeds the criteria. Decreasing the allowable design leak rate of the Spacelab vehicles could be extremely costly to the program and such an approach is somewhat impractical in that only 3.29 $g \cdot day^{-1}$ could be allowed to leak to insure criteria compliance. Realistically, leakage return flux should not impact any exposed surfaces other than possibly such cryogenic systems as the LHe Infrared Telescope which will have an acceptance angle much less than 2π steradian (closer to 0.1 steradian). However, as stated, the return flux criteria is exceeded. The levels for leakage return flux can be decreased by utilizing previously suggested methods of surface protection, attitude and orbital altitude selection (above 600 km).

5.4 Background Brightness - *It is a design and operational goal for Spacelab to control contunuous emissions or scattering to not exceed 20th magnitude·s^2 in the UV range.* This is equivalent to $10^{-12}B_{\odot}$ at a wavelength of 360 nanometers.

Background brightness induced by the scattering or emission of radiant energy can result from the presence of either contaminant particles or molecules within the field-of-view of a sensitive optical instrument. For the modeled Spacelab molecular contaminant sources, the primary phenomena of concern in this regard is the scattering of solar energyfrom the irradiated contaminant molecules. Previous analyses of this phenomena for outgassing, early desorption and cabin leakage[2] have indicated that all will be well within the criteria as stated. This conclusion is still valid.

Although approximately 15% of the vent effluents from the SCV will be emitted in the form of water molecules, the greater concern of this source with regard to the background brightness criteria will be the scattering and emission from the generated ice particles. Due to its potential production of many particles in the submicron region where the scattering level can be significant, exceeding this criteria during vent operations is highly probable. For this reason, the SCV overboard dumps should be timelined to avoid interference with sensitive Spacelab payload data acquisition. Particle contamination modeling was not extended in this study since the controllable sources can be timelined and the unpredictable surface/source particles cannot as yet be quantified.

5.5 Absorption Due to Condensible Deposition - *It is a design and operational goal for Spacelab to control to 1% the absorption of UV, visible and IR radiation by condensibles on optical surfaces.* This refers to the objective of an optical system that would typically have a dielectric surface at ambient temperature (approximately 300°K) that is located at the PMP, is oriented along the +Z axis and has an acceptable of 0.1 steradian. It is also assumed that this is for a 7 day mission with random orientation of the ambient drag vector.

Evaluation of this criteria statement indicates that the only major modeled Spacelab contaminant source presenting a concern for absorption by condensibles under the above stated assumptions is the outgassing of Spacelab external nonmetallic materials. This is due to the fact that negligible amounts of

the other evaluated source constituents will stick to a surface at 300°K for any measurable time period. To analyze the phenomena of outgassing deposition, a systematic approach was taken utilizing the predictions contained in Table IV which are based upon the above stated assumptions. Since this criteria statement is based upon the contaminant effect rather than a specific contaminant level, a more comprehensive evaluation is necessary to determine the compliance of the model predictions with the criteria limits.

The results of this evaluation indicate that the maximum absorption due to condensibles will be induced by the SMTP Spacelab configuration. By assuming that the sensitive surface would be a reflective optic detecting at 1500Å wavelength, the maximum absorption due to outgassing deposition would be 0.16% under the conditions evaluated. This is well within the criteria limits and consequently the Spacelab design as modeled is in compliance.

5.6 Evaluation Summary - To facilitate the interpretation of the preceding criteria evaluation, with respect to Spacelab design/development control, the major results and conclusions are summarized in Table V. From this table, certain program overview design and development directions can be made concerning the major modeled Spacelab contaminant sources and preliminary design/operational requirements. These include:

a. The contaminant source of outgassing meets all of the CRDG Spacelab design criteria statements evaluated as based upon the supplied test data from ESA.

b. The most restrictive criteria statement for Spacelab early desorption is that for return flux. An early desorption rate of less than 9.2×10^{-11} $g \cdot cm^{-2} \cdot s^{-1}$ at 100°C will result in compliance with the criteria. If materials control to this level proves impractical from a design viewpoint, activation and/or exposure of payloads sensitive to the early desorption induced environment should be delayed up to 35 hours until early desorption has decayed to an acceptable level.

c. Cabin atmosphere leakage cannot from a practical point of view be controlled to a satisfactory level of compliance with the return flux criteria through Spacelab design alone. For Spacelab missions on which

Table V. Spacelab Contamination Control Criteria Evaluation Summary

REQUIREMENT	CONCLUSIONS	RECOMMENDATIONS
• Particulate Background	• Condensate vent exceeds criteria during operation	• Timeline operation >15 minutes prior to operation of sensitive payloads
	• Impacts of random surface material sloughing unknown but indications are that criteria will be exceeded	• As a minimum utilize ground control equivalent to Skylab
• Molecular Column Density	• Condensate vent exceeds criteria during operation	• Timeline operation around operation of sensitive payloads
	• Early desorption exceeds criteria	• Delay operation of susceptible payloads until early desorption rate has decayed to an acceptable level (Between 6 and 24 hrs depending on configuration)
	• Leakage/outgassing are acceptable	• None
• Return Flux	• Outgassing is acceptable	• None
	• Early desorption exceeds criteria at 200 to 600 km altitude (depend- on configuration)	• Delay operation of susceptible payloads until early desorption rate has decayed to an acceptable level (Between 19.5 and 35 hrs depending on configuration)
	• Leakage exceeds criteria at 200 to 600 km altitude	• Control leakage to 3.29 $g \cdot day^{-1}$ or fly susceptible payloads above 600 km altitude

Table V. Spacelab Contamination Control Criteria Evaluation Summary (Continued)

REQUIREMENT	CONCLUSIONS	RECOMMENDATIONS
• Return Flux (cont)	• Condensate vent exceeds criteria during operation	• Timeline operation around operation of sensitive payloads
• Background Brightness	• Outgassing, early desorption and leakage comply	• None
	• Condensate vent exceeds criteria during operation	• Timeline operation >15 minutes prior to operation of sensitive payloads
• 1% Absorption by Condensibles	• All Spacelab sources comply	• None

Note: Other contamination phenomena not explicitly covered by the Contamination Control Criteria include pressure induced corona arc-over damage to high voltage power supplies, perturbation or skewing of the composition of the ambient atmosphere and deposition upon cryogenic surfaces.

instruments that are sensitive to this phenomena are to be flown, the impact of leakage can be minimized through proper selection of orbital altitude, attitude and sensitive surface protective devices such as operable covers. For a vast majority of proposed Spacelab payloads, other than those operating at crygenic temperatures, the impact of the predicted levels of return flux of cabin atmosphere leakage will be negligible.

d. During its operation, the SCV will exceed all of the criteria statements with the exception of the 1% absorption due to condensibles. This source cannot be controlled through design without major system modifications such as storing the condensate rather than expelling it overboard. The logical approach to complying with the intent of the criteria statements by the SCV would be to timeline venting to avoid interference with sensitive payload data acquisition and protect sensitive surfaces during vent operations.

6. ADDITIONAL STUDIES

6.1 First Spacelab Mission Payload Compatibility - The purpose of this study activity was to evaluate the first Spacelab mission (denoted SL-1) payload mix for compatibility with the corresponding induced contaminant environment predictions with the ultimate goal of establishing design and operational requirements to insure that the scientific objectives of the SL-1 payloads are not compromised by the induced environment. Unlike the Spacelab design studies presented in Sections 4 and 5, this analysis examined the combined Orbiter/Spacelab induced environment throughout the launch, on-orbit and reentry phases. The basis for this evaluation included the SL-1 mission parameters (i.e., altitude, attitudes, timelines, etc.) and applicable data contained in the SL-1 payload Experiment Requirements Documents (ERDs). The analytical tool employed in the analysis was the integrated Shuttle Orbiter/LMOP option of the SPACE Computer Program.

At this writing, the data base required to conduct a detailed SL-1 assessment is incomplete in the critical area of payload sensitivities to the induced environment for the ESA developed payloads. Responses from the ESA experiment principal investigators (PIs) on this subject were due to NASA September 12, 1977, however, they have not yet been received and consequently cannot be reflected herein. The NASA experiment PI responses have been received and were integrated into the evaluation. Where payload sensitivity data was not available, the approach was to assume sensitivities based upon the contamination control criteria contained in paragraph 4.3.4.6 of Reference 12. Additional assumptions utilized in the SL-1 evaluation included: 1) Spacelab pallet surfaces coated with Chemglaze Z-276 white thermal control paint; 2) Spacelab external surface temperatures based upon Reference 14 and 3) Orbiter external surface temperatures based upon Reference 10.

The results of the preliminary SL-1 evaluation of the 43 proposed SL-1 payloads are summarized in Table VI. Included therein are the available payload sensitivity levels identified to date. In general, activation of those payloads identified to be susceptible to pressure induced corona arc-over damage should be delayed for approximately 24 hours until the initial early desorption rate has decayed to an acceptable level. These payloads should also consider actively monitoring the local pressures in corona sensitive areas to insure system

Table VI. SL-1 Payload Sensitivity Summary

Sensitive Payload	Contamination Concerns: Deposition	Field-of-View	Corona
NASA			
INS001	X	X	10^{-5} Torr Max.
INS002	O_2/H_2O	-	10^{-5} Torr Max.
INS003	3% @ 2000-7500Å	3% @ 2000-7500Å	-
INS005	10% @ 1400Å	10% @ 1400Å	-
INA008	0.01% @ 0.25-6 microns	0.01% @ 0.25-6 microns	-
INA009	H_2O + Other Gases	10^{12} H_2O mol· cm^{-2} 10^{13} CO_2 mol· cm^{-2}	-
ESA			
IES013	X	-	-
IES014	X	X	-
IES015	X	X	X
IES016	X	X	-
IES017	X	X	X
IES020	-	-	X
IES021	X	X	-
IES022	X	X	-
IES033	X	-	-
IES034	-	-	X

X = Contamination concern identified although sensitivity level TBD.

safety. Deposition sensitive payloads should be covered during launch, non-operating periods and reentry; should avoid pointing into the ambient drag vector during non-data acquisition periods and, where possible, be equipped with sensitive surface heater systems to hold them above approximately 50°C. The INA009 payload which operates at cryogenic temperatures (100°K) should be provided with an operable cover and should be timelined around the operation of the Orbiter evaporator and vernier control system engines, the Spacelab condensate vent and venting of the following SL-1 payloads:

INS002	IES020
INA009	IES300

For the payloads susceptible to field-of-view interference of radiant emission, scattering or absorption by the contaminant cloud, activation should be delayed approximately 24 hours to avoid the impacts of early desorption, and data acquisition should be timelined to avoid operations of the above stated engine and vent systems. Current indications are that the most sensitive SL-1 payloads will be the NASA INA009 payload primarily due to its cryogenic operating temperatures and the NASA INA008 payload due to its low degradation tolerances.

The SL-1 mission payload compatibility analysis activities will be continued up to the conclusion of this contract. At that time the above evaluation will be updated and/or expanded as necessary and documented in a formal input section to the SL-1 Mission Payload Compatibility Report.

6.2 SL-1 Payload Bay and Airlock Pressure Profile - In support of the first Spacelab mission contamination evaluation studies, a preliminary analysis was conducted to determine the on-orbit time variation of the contaminant induced pressures in the payload bay volume above the SL-1 pallet and within the SL-1 +Z scientific airlock.

The payload bay pressure profile was determined by utilizing the integrated SL-1/Orbiter SPACE Program contaminant flux and density predictions at points strategically located above the SL-1 pallet within the payload bay volume. A total of 15 point locations were evaluated with those illustrated in Figure 4 representing the predicted extremes.

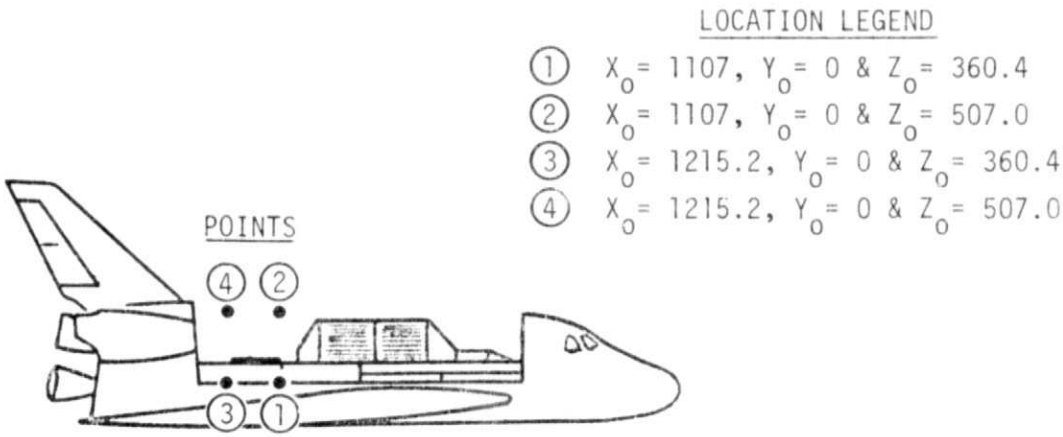

Figure 4. SL-1 Payload Bay Pressure Profile Point Locations

The configuration evaluated was the Spacelab LMOP/Shuttle Orbiter. Modeled contaminant sources included: 1) nonmetallic materials outgassing and early desorption (utilizing established Orbiter materials mass loss rate characteristics and the Chemglaze II/MLI rate data for Spacelab); 2) cabin leakage based upon specification leak rates for the pressurized Orbiter/Spacelab modules; 3) the Orbiter evaporator vents and 4) the Orbiter Reaction Control System (RCS) and Vernier Control System (VCS) engines. No specific experiment sources were considered and maximum Orbiter/Spacelab surface thermal profiles were assumed.

The resulting pressure profile predictions for the point locations illustrated in Figure 4 are depicted in Figure 5. These predictions are for contaminant transport directly from the emitting source to the modeled point locations and indicate that activation of most corona susceptible payloads will be safe after approximately 15 hours on-orbit. An additional phenomena which should be considered is the induced pressure resulting from the return flux of emitted contaminants. Worst case analysis of the major Orbiter/Spacelab return flux sources assuming single collision, maximum ram attitude, orbital velocity imparted to returning molecules and no ambient atmosphere contribution to the induced pressure yields the following representative return flux induced pressure levels within the SL-1 payload bay area:

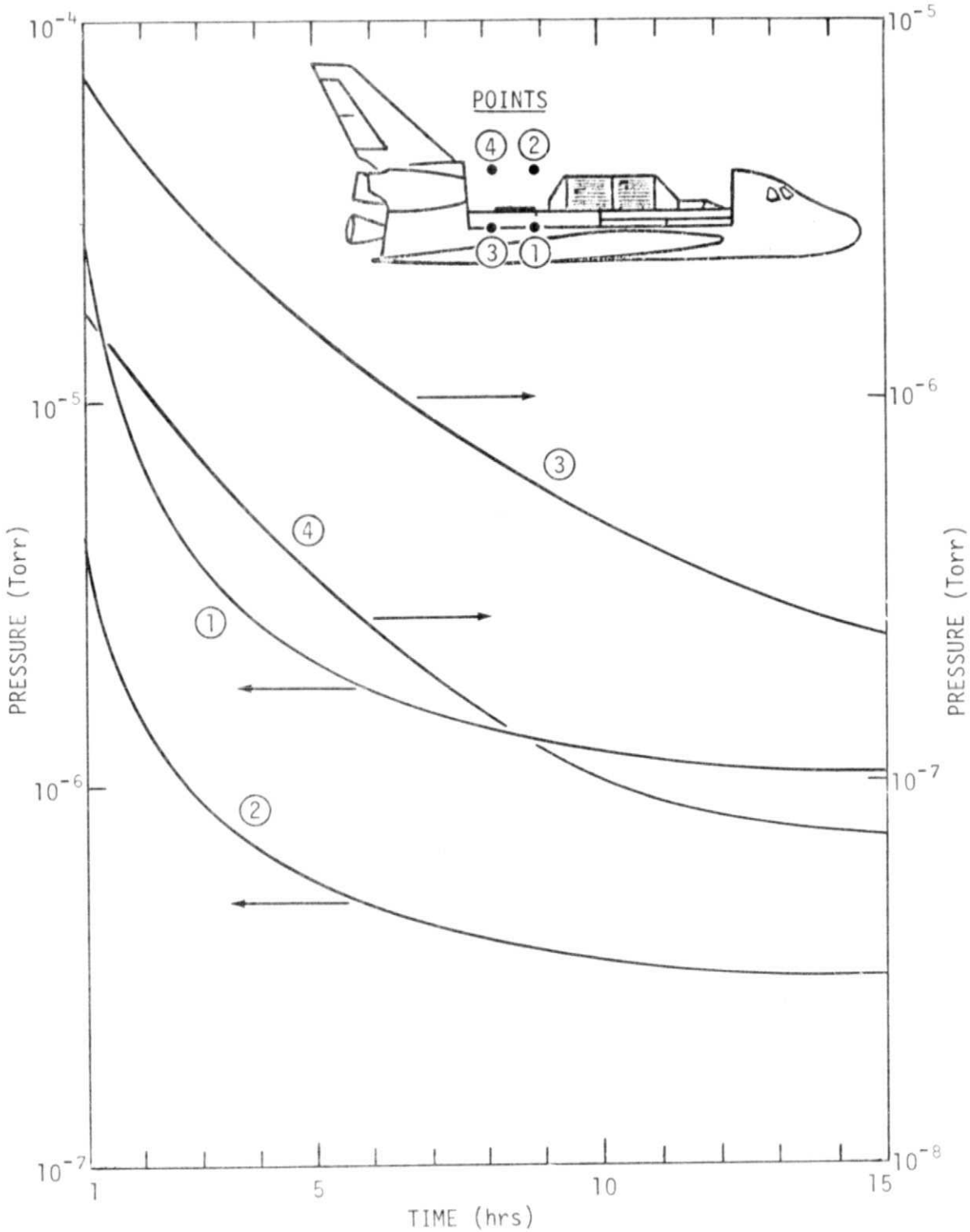

Figure 5. SL-1 Payload Bay Pressure Variation with Time

Evaporator	4.9×10^{-5} Torr
-Z Firing AFT VCS	1.8×10^{-4} Torr
-Z Firing AFT RCS	8.2×10^{-3} Torr
Leakage	1.3×10^{-5} Torr

(Note: The current SPACE Program has not been designed to handle the multiple collision influence on return flux predictions. This would attenuate the above predictions for high density sources such as the VCS/RCS and should be further investigated.)

Although these pressure levels will exist only under worst case conditions and the highest levels will occur only while the Orbiter evaporator or engine systems are operating, corona susceptible payloads should consider the impacts of momentary high pressure levels in their design and operational planning. For example, the return flux pressure levels can be reduced to near zero by flying the Orbiter in a -Z into the velocity vector (belly forward) orbital attitude.

As per ESA analysis, the SL-1 +Z Scientific Airlock (SAL) pressure will drop from 14.7 psia to 5 millibars (6.65 Torr) in approximately 12 minutes of blowdown through the SAL vent system. Upon opening the airlock to space, the pressure will drop to near ambient almost instantaneously. The only identified contaminant source contributing to the SAL induced pressure will be the 9.4×10^{-4} $g \cdot s^{-1}$ of cabin leakage.[15] The induced pressures within the SAL volume will vary from 2.2×10^{-6} Torr at 5 cm from the internal most SAL surface to 5.6×10^{-9} Torr at 100 cm (well below ambient) and should present negligible problems to corona susceptible instruments. These pressures will remain constant as long as the airlock is open to space except under the return flux conditions previously discussed. Therefore, any SAL experiment corona problems encountered during SL-1 will most likely result from contaminants emitted from the experiments themselves.

7. CONCLUSIONS AND RECOMMENDATIONS

7.1 Conclusions - The following conclusions are presented as a result of the activities and studies conducted during this contract period. These conclusions are in part a function of the fidelity of the available Spacelab design and test data and the status of development of the SPACE Program.

a. It is important that the analytical modeling for Spacelab mission integration and planning be continued and refined to insure that mission objectives are not compromised by the induced environment. It is extremely vital that experiment investigators are aware of the induced environment to which they must design and which will establish the required operational procedures for their instruments.

b. The applicability of the existing surface/source random particulate emission data base to Spacelab evaluation is questionable, although implications are that the contamination criteria for particles from structural surfaces may be difficult for Spacelab to meet. This may not be determined until data is received from Orbital Flight Tests and early Spacelab missions.

c. Nonmetallic material outgassing for the anticipated thermal control materials on Spacelab meets all of the contamination control criteria statements. In contrast, early desorption from the same materials exceeds the column density and return flux criteria. Operational controls will be required to meet the intent of these criteria for early desorption.

d. Cabin atmosphere leakage satisfies all criteria statements with the exception of return flux. This contaminant source may present some problems for cryogenic systems exposed to the worst case ambient drag vector situation for extended periods of time, and pointing requirements or attitude/altitude constraints may be necessary.

e. Recent ESA materials test data for the Spacelab MLI and Chemglaze II thermal coatings has resulted in a significant improvement in the Spacelab induced environment predictions for outgassing and early desorption.

However, as demonstrated in the SL-1 mission compatibility assessment, (Section 6.1), these sources must still be considered as potential contaminant threats for specific sensitive payloads.

7.2 Recommendations - The following recommendations are presented as a result of the activities conducted during this reporting period which are felt necessary to insure Spacelab compliance with the current criteria and/or required to continue the modeling and analysis activities.

a. The following design configuration data should be supplied by ESA so that continued analysis and updates can be conducted consistent with program milestones: 1) nonmetallic materials map of the Spacelab wire cabling; 2) corresponding materials mass loss/contamination data; 3) current cabling configuration drawings and 4) overboard vent plume definitions, flowrates and constituents for the condensate and experiment vents. The lack of such data has somewhat limited the ability to conduct Spacelab design and development analyses, and is highly desirable when performing detailed Spacelab/payload mission evaluations.

b. To meet the intent of the column density criteria, activation of sensitive instruments should be delayed up to 24 hours until the early desorption rate has decayed sufficiently (to less than 2.1×10^{-8} $g \cdot cm^{-2} \cdot s^{-1}$ at 100°C) and the SCV should be timelined to avoid interference with sensitive payloads.

c. To meet the intent of the particle sighting and background brightness criteria, the SCV should be timelined to avoid interference with sensitive payload data acquisition.

d. To meet the intent of the return flux criteria, orbital altitudes above 600 km should be selected for sensitive missions (e.g. those containing cryogenic payloads) to minimize cabin atmosphere leakage impacts. Activation or exposure of sensitive surfaces should be delayed approximately 35 hours until early desorption has decayed sufficiently. Orbital attitudes should be selected to avoid maximum return flux orientation and to avoid the maximum vehicle surface

temperature profiles. An additional option is to fly payloads sensitive to return flux of leakage contaminants on pallet-only Spacelab missions.

e. To avoid being overly restrictive or optimistic of Spacelab contamination control, a detailed criteria evaluation of the entire STS (i.e., Orbiter, external tanks and solid rocket boosters) in conjunction with Spacelab should be conducted to establish necessary contaminant environment "budgeting" between these components. Spacelab payload contaminant sources should also be considered.

f. Spacelab/Orbiter mission modeling and analysis for each proposed payload mix and mission profile should be continued to determine the necessary operational timelines, constraints, design modifications, etc. to insure the success of each mission from a contamination viewpoint. This activity would involve the continued development of a modified SPACE Program capable of dynamically simulating the induced environment of a space vehicle throughout an entire mission.

g. SPACE Program refinements and updates should be continued in conjunction with necessary user training and support to expand its capabilities and to insure that state-of-the-art methodology is reflected in the program. These should include further evaluation of the influences of contaminant interactions with the ambient molecules and other contaminants upon NCD, return flux and local pressures (this is important for the multiple collision phenomena experienced in high density regimes of point sources); further investigation into the scattering cross-sections for high velocity molecular collisions and evaluation of the ultimate impact of ambient molecules reflected from vehicle structural surfaces to the NCD.

h. Consideration should be given to establishing a computer model similar in approach to the molecular SPACE Program to geometrically synthesize the induced particulate environment of a space vehicle such as Spacelab. The model should contain the major elements of source functions, transport phenomena (both aerodynamic drag and orbital mechanics) and effects upon sensitive scientific instrumentation.

8. REFERENCES

The following documents are presented to support the technical and programmatic material referenced in the text of this report.

1) "Payload/Orbiter Contamination Control Requirement Study," MSFC NAS8-30755 Exhibit B, MCR-75-202, June 1975, Martin Marietta Aerospace, Denver Division.

2) "Payload/Orbiter Contamination Control Requirement Study - Spacelab Configuration Contamination Model," MSFC NAS8-31574 Exhibit A, MCR-76-387, September 1976, Martin Marietta Aerospace, Denver Division.

3) "Shuttle/Payload Contamination Evaluation Program - The SPACE Computer Program," MSFC NAS8-31574 Exhibit B, MCR-77-104, April 1977, Martin Marietta Aerospace, Denver Division.

4) Telex LS/HM/885 and LS/HM/887 from H. Martinides - ESTEC to A. Galzerano - NASA MSFC, subject: "Outgassing of Chemglaze II A-276," dated May 25, 1977.

5) Zwaal, A.: "Outgassing of Spacelab Thermal Blanket," TQMAZ-77-06, August 1977, ESTEC.

6) Memo MMO-DS-50-014-77, Subject: "Shape of the Condensate Water Jet Outside the Overboard Dumping Nozzle," April 26, 1977, Dornier Systems.

7) Robertson, S. J.: "Spacecraft Self-Contamination Due to Back-Scattering of Surface Outgassing," November 1975, Lockheed Missiles and Space Company, Inc.

8) Johnson, Francis S.: Satellite Environment Handbook, Second Edition, Stanford University Press, 1965.

9) Hirshfelder, J. O., Curtiss, C. F. and Bird, R. B.: Molecular Theory of Gases and Liquids, New York: John Wiley & Sons, Inc., 1954.

10) Memo ES34-2176-16M from E. T. Chimenti - ES34 to L. Leger - ES5, Subject: "Orbiter On-orbit TPS Surface and Internal Structure Temperature Predictions," February 3, 1976, Johnson Space Center, Houston, Texas.

11) "Shuttle/Payload Contamination Evaluation Program - The Space Computer Program" Revision Pages, MSFC NAS8-31574 Exhibit B, MCR-77-104 Rev. A, September 1977, Martin Marietta Aerospace, Denver Division.

12) JSC 07700, Vol. X and XIV, Revision C, "Space Shuttle Program Space Shuttle System Payload Accommodations," July 3, 1974, Lyndon B. Johnson Space Center.

13) Memo: ES31 from R. Naumann to NA01/Manager Spacelab Program Office, Subject: Withdrawal of ECR EL 52-0032R1, May 24, 1976.

14) Technical Letter ESD-EP45-22788 from Thermodynamics Branch, Teledyne Brown Engineering to J. W. Littles, Chief Life Support and Environmental Branch, MSFC, Subject: "JSC/ESA Integrated Orbiter/Spacelab Thermal Model Temperature Data for Spacelab Extreme Design Conditions," April 12, 1976.

15) "ESA External Contamination Study - Source File," TN-ER-33-005-77, European Space Agency, May 1977.