General Disclaimer

One or more of the Following Statements may affect this Document

- This document has been reproduced from the best copy furnished by the organizational source. It is being released in the interest of making available as much information as possible.

- This document may contain data, which exceeds the sheet parameters. It was furnished in this condition by the organizational source and is the best copy available.

- This document may contain tone-on-tone or color graphs, charts and/or pictures, which have been reproduced in black and white.

- This document is paginated as submitted by the original source.

- Portions of this document are not fully legible due to the historical nature of some of the material. However, it is the best reproduction available from the original submission.

Produced by the NASA Center for Aerospace Information (CASI)

National Aeronautics and
Space Administration

Lyndon B. Johnson Space Center
Houston, Texas 77058

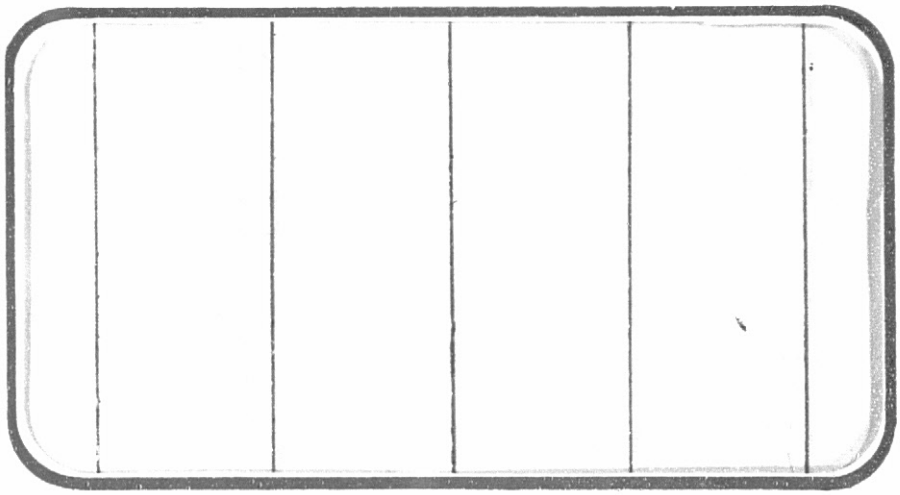

(NASA-CR-151371) RESULTS OF A LANDING GEAR LOADS TEST USING A 0.0405-SCALE MODEL (16-0) OF THE SPACE SHUTTLE ORBITER IN THE ROCKWELL INTERNATIONAL NAAL WIND TUNNEL (OA163B), VOLUME 2 (Chrysler Corp.) 755 p

N77-33254

NC A99/MF A01

Unclas
G3/16 50265

SPACE SHUTTLE AEROTHERMODYNAMIC DATA REPORT

Data Management Services

SPACE DIVISION CHRYSLER CORPORATION

July 1977

DMS-DR-2361
NASA CR-151,371

VOLUME 2 OF 2

RESULTS OF A LANDING GEAR LOADS TEST USING A 0.0405-SCALE MODEL (16-0) OF THE SPACE SHUTTLE ORBITER IN THE ROCKWELL INTERNATIONAL NAAL WIND TUNNEL (OA163B)

by

R. C. Mennell
Shuttle Aero Sciences
Rockwell International Space Division

Prepared under NASA Contract Number NAS9-13247

by

Data Management Services
Chrysler Corporation Michoud Defense-Space Division
New Orleans, La. 70189

for

Engineering Analysis Division

Johnson Space Center
National Aeronautics and Space Administration
Houston, Texas

WIND TUNNEL TEST SPECIFICS:

Test Number:	NAAL 768
NASA Series Number:	OA163B
Model Number:	16-0
Test Dates:	December 21 through December 23, 1976
Occupancy Hours:	35

FACILITY COORDINATOR:

R. B. Russell
Mail Code BD02
Rockwell International
B-1 Division
International Airport
Los Angeles, CA 90009

Phone: (213) 670-3343

AERODYNAMICS ANALYSIS ENGINEER:

P. K. Miller
Mail Code AC07
Rockwell International
Space Division
12214 Lakewood Boulevard
Downey, CA 90241

Phone: (213) 922-4955

PROJECT ENGINEER:

R. C. Mennell
Mail Code BD02
Rockwell International
B-1 Division
International Airport
Los Angeles, CA 90009

Phone: (213) 670-3343

DATA MANAGEMENT SERVICES:

Prepared by: Liaison--D. W. Hersey
Operations--G. W. Klug

Approved: J. L. Glynn
J. L. Glynn, Manager
Data Operations

Concurrence: N. D. Kemp
N. D. Kemp, Manager
Data Management Services

Chrysler Corporation Michoud Defense - Space Division assumes no responsibility for the data presented other than display characteristics.

RESULTS OF A LANDING GEAR LOADS TEST USING A 0.0405-SCALE MODEL (16-0) OF THE SPACE SHUTTLE ORBITER IN THE ROCKWELL INTERNATIONAL NAAL WIND TUNNEL (OA163B)

by

R. C. Mennell, Rockwell

ABSTRACT

Experimental aerodynamic investigations were conducted on a sting mounted 0.045-scale representation of the 140C outer mold line space shuttle orbiter configuration in the Rockwell International 7.75 x 11.00 foot low speed wind tunnel during the time period from December 21, 1976, to December 23, 1976. NASA designation for this test period was OA163B. Facility designation was NAAL 768.

The primary test objective was to verify orbiter landing gear system pressure loading and hinge moment levels obtained during the test period OA163.

Secondary objectives included recording pressure, force, and hinge moment data over smaller increments of the landing gear deployment schedule to insure data accuracy as well as investigating the effects of asymmetric gear deployment on all recorded parameters.

Testing was conducted at a Mach number of 0.17, a freestream dynamic pressure of 42.5 psf, and a Reynolds number per unit length of 1.2×10^6/ foot. Angle of attack variation was -2 to 10 degrees while angles of sideslip varied from -5 to 5 degrees.

TABLE OF CONTENTS

	Page
ABSTRACT	iii
INDEX OF MODEL FIGURES	2
INDEX OF DATA FIGURES	4
NOMENCLATURE	6
CONFIGURATIONS INVESTIGATED	10
TEST FACILITY DESCRIPTION	12
DATA REDUCTION	13
REFERENCES	15
TABLES	
I. TEST CONDITIONS	16
II. DATA SET/RUN NUMBER COLLATION SUMMARY	17
III. MODEL DIMENSIONAL DATA	19
FIGURES	
MODEL	31
DATA	45
APPENDIX	
TABULATED SOURCE DATA	
Force Vol. 1	
Pressure	
NLG Outer Surface Vol. 1 } (Pages 1-312)	
NLG Inner Surface Vol. 1 }	
MLG Outer Surface Vol. 2 } (Pages 313-1018)	
MLG Inner Surface Vol. 2 }	
Nose/Mair Gear Door Perimeters Vol. 2 }	45
Main Gear Strut Vol. 2 }	

INDEX OF MODEL FIGURES

Figures	Title	Page
1.	Axis systems and sign conventions.	
	a. Total Vehicle Axis Systems	31
	b. Sign Convention for Control Surfaces	32
	c. Gear Door Coordinate System	33
	d. Sign Convention for Landing Gear	34
2.	Model sketches.	
	a. Model Base Pressure Instrumentation	35
	b. L. H. NLG Door Pressure Instrumentation	36
	c. L. H. MLG Door Pressure Instrumentation	37
	d. L. H. MLG Strut Pressure Instrumentation	38
	e. Typical Landing Gear Strut Strain Gage Instrumentation	39
	f. Typical Landing Gear Door Strain Gage Instrumentation	40
3.	Model photographs.	
	a. NAAL Installation, Front View, Model Configuration $B_{68}C_{12}G_{20}M_{16}N_{28}W_{127}E_{55}F_{10}V_{8}R_{5}X_{9}$	41
	b. NAAL Installation, Rear View, Model Configuration $B_{68}C_{12}G_{20}M_{16}N_{28}W_{127}E_{55}F_{10}V_{8}R_{5}X_{9}$	41
	c. NAAL Installation, Bottom View, Model Configuration $B_{68}C_{12}G_{20}M_{16}N_{28}W_{127}E_{55}F_{10}V_{8}R_{5}X_{9}$, Landing Gear Fully Retracted	42
	d. NAAL Installation, Bottom View, Model Configuration $B_{68}C_{12}G_{20}M_{16}N_{28}W_{127}E_{55}F_{10}V_{8}R_{5}X_{9}$, Landing Gear Partially Extended	42

INDEX OF MODEL FIGURES (Concluded)

Figures	Title	Page
3.	Model photographs. (Continued)	
	NAAL Installation, Bottom View, Model Configuration $B_{68}C_{12}G_{20}M_{16}N_{28}W_{127}E_{55}F_{10}V_{8}R_{5}X_{9}$, Landing Gear Fully Extended	43

INDEX OF DATA FIGURES

FIGURE NUMBER	TITLE	CONDITIONS VARYING	PLOTTED COEFFICIENTS SCHEDULE	PAGE
4	EFFECT OF ELEVON DEFLECTION ON ORBITER CHARACTERISTICS	ELV-L, BETA	A	1-99
5	EFFECT OF BODY FLAP DEFLECTION ON ORBITER CHARACTERISTICS	BDFLAP, BETA	A	100-198
6	EFFECT OF ELEVON DEFLECTION ON LANDING GEAR HINGE MOMENTS	ELV-L, BETA	B	199-242
7	EFFECT OF BODY FLAP DEFLECTION ON LANDING GEAR HINGE MOMENTS	BDFLAP, BETA	B	243-286
8	EFFECT OF SIDESLIP ANGLE ON LANDING GEAR HINGE MOMENTS PHI-M = 26.0 DEG	BETA	B	287-294
9	EFFECT OF SIDESLIP ANGLE ON LANDING GEAR HINGE MOMENTS PHI-M = 32.2 DEG	BETA	B	295-302
10	EFFECT OF SIDESLIP ANGLE ON LANDING GEAR HINGE MOMENTS PHI-M = 36.0 DEG	BETA	B	303-310
11	EFFECT OF SIDESLIP ANGLE ON LANDING GEAR HINGE MOMENTS PHI-M = 40.0 DEG	BETA	B	311-318
12	EFFECT OF NOSE LANDING GEAR POSITION ON HINGE MOMENTS, PHI-M = 26.0 DEG	THETAN, PHI-N, BETA	B	319-342
13	EFFECT OF NOSE LANDING GEAR POSITION ON HINGE MOMENTS, PHI-M = 32.2 DEG	THETAN, PHI-N, THETMR, PHI-MR, BETA	B	343-370

INDEX OF DATA FIGURES (Concluded)

FIGURE NUMBER	TITLE	CONDITIONS VARYING	PLOTTED COEFFICIENTS SCHEDULE	PAGE
14	EFFECT OF SIDESLIP ANGLE ON LANDING GEAR HINGE MOMENTS, PHI-M = 32.2/36	BETA	B	371-378
15	EFFECT OF SIDESLIP ANGLE ON LANDING GEAR HINGE MOMENTS, PHI-M = 32.2/26	BETA	B	379-386
16	EFFECT OF SIDESLIP ANGLE ON LANDING GEAR HINGE MOMENTS, PHI-M = 88/32.2	BETA	B	387-394

PLOTTED COEFFICIENTS SCHEDULE:

A) C_L, C_N, C_{A_f}, C_{D_f}, C_{A_b}, C_m, C_Y, C_l(BODY), C_n(BODY) versus α

B) CHMNS, CHMND, CHMMS, CHMMD versus α

NOMENCLATURE

SYMBOL	MNEMONIC	DEFINITION
A_b		base area, ft^2
A_{BC}		balance cavity area, ft^2
b	BREF	span, inches
b_{ML}	BML	main gear door span, inches
b_{NL}	BNL	nose gear door span, inches
c		chord, inches
$\bar{c}$	LREF	wing mean aerodynamic chord, inches
C_A	CA	axial force coefficient
C_{A_b}	CAB	base axial force coefficient
C_{A_f}	CAF	forebody axial force coefficient
C_D	CD	drag coefficient
C_{D_b}	CDB	base drag coefficient
C_{D_f}	CDF	forebody drag coefficient
C_h	CH	hinge moment coefficient
$C_{h_{ei}}$	CHEI	inboard elevon hinge moment coefficient
$C_{h_{eo}}$	CHEO	outboard elevon hinge moment coefficient
$C_{h_{MD}}$	CHMMD	main gear door hinge moment coefficient
$C_{h_{MS}}$	CHMMS	main gear strut hinge moment coefficient
$C_{h_{ND}}$	CHMND	nose gear door hinge moment coefficient
$C_{h_{NS}}$	CHMNS	nose gear strut hinge moment coefficient
C_L(Body)	CL	lift coefficient
C_ℓ	CBL	body axis rolling moment coefficient

NOMENCLATURE (Continued)

SYMBOL	MNEMONIC	DEFINITION
C_m	CIM	pitching moment coefficient
c_{ML}	CML	main gear door chord, inches
C_N	CN	normal force coefficient
c_{NL}	CNL	nose gear door chord, inches
C_n (Body)	CYN	yawing moment coefficient
C_{Pi}	CPi	pressure coefficient at station i
C_Y	CY	side force coefficient
C.G.		center of gravity
DUMMY1	DUMMY1	artificial geometric X variable
DUMMY2	DUMMY2	artificial geometric Y variable
HM		hinge moment, in-lb
HM_{MD}		main door hinge moment, in-lb
HM_{MS}		main strut hinge moment, in-lb
HM_{ND}		nose door hinge moment, in-lb
HM_{NS}		nose strut hinge moment, in-lb
ℓ_B	L	reference fuselage length, inches
L.H.		left hand
M_∞	MACH	freestream MACH number
MAC		mean aerodynamic chord, inches
MLG		main landing gear
MRP		moment reference point
NAAL		North American Aerodynamics Laboratory
	XCP/L	center of pressure location

NOMENCLATURE (Continued)

SYMBOL	MNEMONIC	DEFINITION
NLG		nose landing gear door
OMS		orbiter manuevering system
P		pressure, psia
P_i	Pi	pressure at station i, psia
P_{Bi}	PBi	base pressure at station i, i = 1, 2, 3, 4, 5, 6, 7, 8, psia
P_{Bc}	PBC	balance cavity pressure, psia
P_o	PO	freestream total pressure, psfa
q_∞	Q(PSF)	freestream dynamic pressure, psfa
RCS		reaction control system
R.H.		right hand
S	SREF	reference area, ft^2
X	X	longitudinal coordinate, inches
X_{MRP}	XMRP	longitudinal location of MRP, inches
X_o	XO	orbiter longitudinal station, inches
X/CML	X/CML	main landing gear door nondimensionalized axial coordinate
X/CNL	X/CNL	nose landing gear door nondimensionalized axial coordinate
Y	Y	lateral coordinate, inches
Y_{MRP}	YMRP	lateral location of MRP, inches
Y_o	YO	orbiter lateral station, inches
Y/BML	Y/BML	main landing gear door nondimensionalized lateral coordinate
Y/bNL	Y/BNL	nose gear door span nondimensionalized lateral coordinate

NOMENCLATURE (Concluded)

SYMBOL	MNEMONIC	DEFINITION
Y/CNL	Y/CNL	nose landing gear door nondimensionalized lateral coordinate
Z	Z	vertical coordinate, inches
Z_{MRP}	ZMRP	vertical location of MRP, inches
Z_o	ZO	orbiter vertical station, inches
α	ALPHA	angle of attack, degrees
β	BETA	angle of sideslip, degrees
δ_a	AILRON	aileron deflection angle, degrees
δ_{BF}	BDFLAP	bodyflap deflection angle, degrees
δ_e	ELEVON	elevon deflection angle, degrees
δ_{eL}	ELV-L	left elevon deflection angle, degrees
δ_{eR}	ELV-R	right elevon deflection angle, degrees
δ_R	RUDDER	rudder deflection angle, degrees
δ_{SB}	SPDBRK	speedbrake deflection angle, degrees
θ_{ML}	THETML	left main gear strut position angle, degrees
θ_{MR}	THETMR	right main gear strut position angle, degrees
θ_N	THETAN	nose gear strut position angle, degrees
ϕ_{ML}	PHI-ML	left main gear door position angle, degrees
ϕ_{MR}	PHI-MR	right main gear door position angle, degrees
ϕ_N	PHI-N	nose gear door position angle, degrees
H_L		hingeline

CONFIGURATIONS INVESTIGATED

The model provided for test period OA163 was a .0405-scale representation of the 140C space shuttle orbiter outer mold line configuration. The basic model was of the blended wing-body design utilizing a double delta wing (75°/45° $\Delta_{L.E.}$), full span, dual panel elevons (unswept hingeline and 6" gaps), a centerline vertical tail with rudder and/or speed brake deflection capability, a canopy, a body flap, and an orbital maneuvering system (OMS pods) mounted on the aft fuselage sidewalls adjacent to the vertical tail. Landing gear simulation consisted of both nose and main landing gear systems each with the deployment capability from full up to full down.

Both the nose and main landing gear systems were instrumented with static pressure measuring orifices and hinge moment beams as illustrated in Figures 2c through 2f.

For this test period the following nomenclature was used to designate various model components:

Component	Description
B_{68}	140C orbiter fuselage with air vent door and vent door probe simulation
C_{12}	140C orbiter canopy
E_{55}	140C orbiter dual panel elevons
F_{10}	140C orbiter body flap
G_{20}	140C orbiter nose and main landing gear system simulation
M_{16}	140C orbiter OMS/RCS pods

CONFIGURATIONS INVESTIGATED (Concluded)

Component	Description
N_{28}	140C orbiter OMS nozzles
W_{127}	140C orbiter double delta wing
R_5	140C orbiter rudder
V_8	140C orbiter centerline vertical tail
X_9	transition grit

The model configuration is designated in Table II as:

Orbiter = B_{68} C_{12} E_{55} F_{10} M_{16} N_{28} R_5 V_8 W_{127} X_9

TEST FACILITY DESCRIPTION

North American Aerodynamics Laboratory (NAAL) 7.75 x 11-foot wind tunnel is a continuous flow, closed circuit, single return tunnel capable of speeds up to 200 miles per hour.

The test section is vented to atmospheric pressure and is 7.75 x 11 feet wide and 12 feet long. Power is supplied by a 1250-horsepower nacelle-mounted synchronous motor driving a 19-foot, seven-blade, laminated birch propeller. Airspeed is controlled by using a magnetic clutch to vary the degree of coupling between the motor and propeller. Turbulence is minimized by a damping screen and a honeycomb section in the settling chamber upstream from the contraction cone (ratio 7.53 to 1).

Tests may be conducted using a variety of mounting systems: single strut, double strut, sting strut, reflection plane, cable suspension, or two-dimensional wall. Aerodynamic data may be measured by a planar type external balance system or sting-mounted internal balances. An Astrodata Automatic Data Acquisition System collects, multiplexes, digitizes, and records on magnetic tape 50 channels of force or pressure data or both. Data are then reduced and plotted using automatic data processing equipment and an automatic digital plotter.

The NAAL wind tunnel has been operating since June 1943. Calibrations are available over a wide range of test conditions.

DATA REDUCTION

The aerodynamic force data presented in this report were measured by the Task Corporation 2.5 inch MK IX six-component strain gage balance. All steady state static pressures were measured by ±2.5 psid Statham differential pressure transducers installed in a four-pack model mounted scanivalve referenced to tunnel static pressure. Landing gear strut and door hinge moment loads were measured from single beam, bearing mounted strain gages.

Corrections applied to the aforementioned data were test section wall effects on model aerodynamic coefficients, model tunnel blockage effects on test section dynamic pressure, and model base pressure drag effects on model angle of attack and angle of sideslip.

Nose and main landing gear door static pressure tap locations are presented non-dimensionalized by landing gear door total chord or span. The coordinate systems used have origins at the forward outer corner of each respective door. Tap locations about the door perimeters and left main landing gear are presented by tap number only.

The following reference dimensions and constants were used in data reduction:

Symbol		Model Scale	Full Scale
A_b	area of model base, (not including A_{BC}), ft^2	0.5885	
A_{BC}	area of balance cavity, ft^2	0.0985	
b	wing span, in.	37.9356	936.68

DATA REDUCTION (Concluded)

Symbol		Model Scale	Full Scale
b_{ML}	left main landing gear door reference span, in.	2.794	68.99
b_{NL}	left nose landing gear door reference span, in.	1.154	28.49
$\bar{c}$	wing MAC, in.	19.230	474.81
c_{ML}	left main landing gear door reference chord, in.	6.116	151.01
c_{NL}	left nose landing gear door reference chord, in.	4.393	108.47
S	wing area, ft^2	4.4123	2690.00
X_{MRP}	reference C.G., fus. sta.	43.6355	1076.68
Z_{MRP}	reference C.G. waterplane	15.1875	375.00
B	orbiter body length, in.	52.2572	1290.30

REFERENCES

1. AD75-SH-0238, "Pretest Information For A Landing Gear Loads Test (OA163) Of The 0.0405-Scale Model Of The Space Shuttle Orbiter In The Rockwell International NAAL Wind Tunnel (Model 16-0)," November 10, 1975.

2. DMS-DR-2289, NASA CR-147,611, "Results Of A Landing Gear Loads Test Using A 0.0405-Scale Model (16-0) Of The Space Shuttle Orbiter In The Rockwell International NAAL Wind Tunnel (OA163)," by R. Mennell, November, 1976.

TABLE I.

TEST : OA163B

DATE : Dec. '76

TEST CONDITIONS

MACH NUMBER	REYNOLDS NUMBER (per foot)	DYNAMIC PRESSURE	STAGNATION TEMPERATURE (degrees Fahrenheit)
0.17	1.20 x 10^6/ft.	42.5#/ft^2	80 - 120°F

BALANCE UTILIZED: 2.5" MK IX

	CAPACITY:	ACCURACY:	COEFFICIENT TOLERANCE:
NF	1500# each gage	±.25%	
SF	750# each gage	±.25%	
AF	200# each gage	±.25%	
PM			
RM			
YM			

COMMENTS:

TABLE II.

TEST: OA163B

DATA SET/RUN NUMBER COLLATION SUMMARY

DATE: POST TEST

DATA SET IDENTIFIER	CONFIG.	α	δ_{BF}	δ_e	GEAR POSITION ϕ_N	θ_N	ϕ_{ML}	θ_{ML}	ψ_{MR}	θ_{MR}	β ~ DEG -5	-4	-3	-2	-1	0	1	2	3	4	5
RFR*01	ORBITER	A	0	0	30.8	5.0	32.2	5.0	32.2	5.0	1	2	3	4	5	6	7	8	9	10	11
2		A					36.0	5.6	36.0	5.6	12	13	14	15	16	17	18	19	20	21	22
3		A/B					40.0	6.2	40.0	6.2	23	24	25	26	27	28	29	30			31
4		B			25.0		26.0	4.0	26.0	4.0	32			33	34	35	36	37			38
5				5	30.8		32.2	5.0	32.2	5.0	39	40	41	42	43	44	45	46	47	48	49
6			16.3	0							51	52	53	54	55	56	57	58	59	60	61
7			0		66.	108	26.0	4.0	26.0	4.0	62			63	64	65	66	67			
8							32.2	5.0	32.2	5.0	68			99	70	71	72	73			74
9									36.0	5.6	75			76	77	78	79	80			81
10									26.0	4.0	83			84	85	86	87	[illegible]			89
11							88.0	98.0	32.2	5.0	90			91	92	93	94	95			96
12		4		5	30.8	108	32.2	5.0			←					50	(β	SWEEP)			→
13		4		0	66	5.0			36.0	5.6	←					82	(β	SWEEP)			→
14	OIL FLOW	2			30.8	5.0			32.2	5.0			98	97							

1 7 13 19 25 31 37 43 49 55 61 67 75 76

α SCHEDULES

COEFFICIENTS

A = -2° to 8° by 2° INCREMENTS

B = 0° to 6° by 2° INCREMENTS

IDVAR (1) IDVAR (2) NDV

A/B = A at -4 ≤ β ≤ -1, B at 0 ≤ β ≤ 5

δ_{SB} = 25° δ_R = 0 FOR ALL RUNS

* See next page for definition of Data Set Identifier notation.

1ST RUN NUMBERS

TABLE II. DATA SET/RUN NUMBER COLLATION SUMMARY (Concluded)

4th Character	Type of Data
	Force Data
F	Aerodynamic force coefficients
H	Left nose and main landing gear door and strut hinge moment coefficients
	Pressure Data
N	Left nose landing gear door outer surface static pressure coefficients
E	Left nose landing gear door inner surface static pressure coefficients
M	Left main landing gear door outer surface static pressure coefficients
F	Left main landing gear door inner surface static pressure coefficients
P	Left nose and main landing gear door perimeter static pressure coefficients
W	Left main landing gear strut static pressure coefficients

TABLE III. MODEL DIMENSIONAL DATA

MODEL COMPONENT: BODY - B_{68}

GENERAL DESCRIPTION: Configuration 140C orbiter fuselage. Similar to 140A/B fuselage except aft body revised and midbody-wing glove area modified. B68 has the addition of air vent doors and air vent door probes.

MODEL SCALE: 0.0405

DRAWING NUMBER: VL70-000140C, -000202C, -000205A, -000200B, -000203

DIMENSIONS:	FULL SCALE	MODEL SCALE
Length (IML: Nose @X_o = 238), In.	1290.30	52.257
Length (OML: Nose @ X_o = 235), In.	1293.30	52.379
Max Width (@ X_o = 1528.3), In.	264.0	10.692
Max Depth (@ X_o = 1464), In.	250.00	10.125
Fineness Ratio	4.899	4.899
Area - Ft^2		
Max. Cross-Sectional	340.89	0.559

TABLE III. MODEL DIMENSIONAL DATA (Continued)

MODEL COMPONENT: CANOPY - C_{12}

GENERAL DESCRIPTION: Configuration 140C orbiter canopy, vehicle cabin No. 31 updated to MCR 200-R4. Used with fuselage B_{62}.

MODEL SCALE: 0.0405

DRAWING NUMBER: VL70-000140C, -000202B, -000204

DIMENSIONS:	FULL SCALE	MODEL SCALE
Length (X_o = 434.643 to 578), In.	143.357	5.806
Max Width (@ X_o = 513.127), In.	152.412	6.173
Max Depth (Z_o = 501 to 449.39), In.	51.61	2.090

TABLE III. MODEL DIMENSIONAL DATA (Continued)

MODEL COMPONENT: ELEVON - E_{55}

GENERAL DESCRIPTION: Configuration 140C dual panel elevon. Elevon hingeline at X_{η} = 1387. Elevon split line at Y_o = 281 to 312.5. Upper wing/elevon gap sealed by flipper doors.

MODEL SCALE: 0.0405

DRAWING NUMBER: VL70-0001400, -006089, -000200B, -006092

DIMENSIONS:	FULL SCALE	MODEL SCALE
Area, Ft^2	210.00	0.344
Span (equivalent), In.	349.20	14.143
Inb'd equivalent chord, In.	118.00	4.779
Outb'd equivalent chord, In.	55.19	2.235
Ratio movable surface chord/ total surface chord		
At Inb'd equiv. chord	0.210	0.210
At Outb'd equiv. chord	0.400	0.400
Sweep Back Angles, degrees		
Leading Edge	0.0	0.0
Trailing Edge	- 10.056	- 10.056
Hingeline	0.0	0.0
Area Moment (Product of Area & $\bar{c}$), Ft^3	1587.25	0.1054
Mean Aerodynamic Chord, In.	90.70	3.673

TABLE III. MODEL DIMENSIONAL DATA (Continued)

MODEL COMPONENT: BODY FLAP - F_{10}

GENERAL DESCRIPTION: Configuration 140C body flap. Hingeline located at X_o = 1532, Z_o = 287.

MODEL SCALE: 0.0405

DRAWING NUMBER: VL70-000140C, -355114

DIMENSIONS:	FULL SCALE	MODEL SCALE
Length (X_o = 1525 to X_o = 1613), In.	87.50	3.544
Max Width (@ L.E., X_o = 1525.5), In.	256.00	10.368
Max Depth (X_o = 1532), In.	19.798	0.802
Area		
Max. Cross-Sectional (@ H.L.)	35.196	0.058
Planform	135.00	0.221
Wetted		
Base (X_o = 1613)	4.89	0.008

TABLE III. MODEL DIMENSIONAL DATA (Continued)

MODEL COMPONENT: LANDING GEAR - G_{20}

GENERAL DESCRIPTION: G_{17} modified to conform to updated drawings V070-510001 and V070-510501, including web-simulation.

MODEL SCALE: 0.0405

DRAWING NUMBER: V070-510001, V070-510501

DIMENSIONS:	FULL SCALE	MODEL SCALE
NOSE LANDING GEAR		
STRUT		
Number	1	1
Diameter, in.	6.420	0.260
Length in.		
Exposed	63.704	2.580
Pivot Point to Wheel Axis	76.543	3.100
Pivot Point Location, In.		
X_o	375.506	15.208
Z_o	298.000	12.069
WHEELS		
Number	2	2
Diameter, in.	32.099	1.300
Width, in.	9.877	0.400
Axis Location, in.		
X_o	370.167	14.992
Y_o	0.0	0.0
Z_o	221.643	8.977
DOORS		
Side		
Number	2	2
Length, in.	108.47	4.393
Height, in.	20.543	0.832
Area, Ft^2	--	--
Hingeline Location		
X_o	--	--
Y_o	± 28.494	± 1.154
Z_o	301.836	12.224
End		
Number	NONE	NONE

TABLE III. MODEL DIMENSIONAL DATA (Continued)

MODEL COMPONENT: LANDING GEAR - G_{20} (Continued)

GENERAL DESCRIPTION: G_{17} modified to conform to updated drawings V070-510001 and V070-510501, including web-simulation.

MODEL SCALE: 0.0405

DRAWING NUMBER: V070-510001, V070-510501

DIMENSIONS:	**FULL SCALE**	**MODEL SCALE**
STRUT		
Number	2	2
Diameter, in.	9.383	0.380
Length, in.		
Exposed	87.901	3.560
Pivot Point to Wheel Axis	107.901	4.370
Pivot Point Location, in.		
X_o	1180.0	47.790
Z_o	283.012	11.462
WHEELS		
Number	4	4
Diameter, in.	49.383	2.000
Width, in.	17.778	0.720
Axis location, in.		
X_o	1172.473	47.485
Y_o	± 136.000	± 5.508
Z_o	175.372	7.103
DOORS		
Side		
Number	2	2
Length, in.	151.012	6.116
Height, in.	62.469	2.530
Area, Ft^2		
Hingeline Location		
X_o		
Y_o	± 174.000	± 7.047
Z_o	282.148	11.427
END		
Number	NONE	NONE

TABLE III. MODEL DIMENSIONAL DATA (Continued)

MODEL COMPONENT: OMS POD - M_{16}

GENERAL DESCRIPTION: Configuration 140C orbiter OMS pod - short pod.

MODEL SCALE: 0.0405

DRAWING NUMBER: VL70-008401, -008410

DIMENSIONS:	FULL SCALE	MODEL SCALE
Length (OMS Fwd. sta. X_o = 1310.5), in.	258.50	10.469
Max Width (@ X_o = 1511), in.	136.8	5.540
Max Depth (@ X_o 1511), in.	74.70	3.025
Area, Ft^2		
Max. Cross-Sectional	58.864	0.0966

TABLE III. MODEL DIMENSIONAL DATA (Continued)

MODEL COMPONENT: OMS NOZZLES - N_{28}

GENERAL DESCRIPTION: Configuration 140C - orbiter OMS nozzles.

MODEL SCALE: 0.0405

DRAWING NUMBER: VL70-000140A (Location), SS-A00106, Release 5(Contour)

DIMENSIONS:	FULL SCALE	MODEL SCALE
Gimbal Point (Station), in.		
Left Nozzles		
X_o	1518.00	61.479
Y_o	- 88.0	- 3.564
Z_o	492.0	19.926
Right Nozzles		
X_o	1518.00	61.479
Y_o	88.00	3.564
Z_o	492.00	19.926
Null Position - Deg.		
Left Nozzles		
Pitch	15°49'	15°49'
Yaw	12°17'	12°17'
Right Nozzles		
Pitch	15°49'	15°49'
Yaw	12°17'	12°17'

TABLE III. MODEL DIMENSIONAL DATA (Continued)

MODEL COMPONENT: RUDDER - R_5

GENERAL DESCRIPTION: Configuration 140C orbiter rudder (identical to configuration 140A/B rudder).

MODEL SCALE: 0.405

DRAWING NUMBER: VL70-000146B, -000095

DIMENSIONS:	FULL SCALE	MODEL SCALE
Area, Ft^2	100.15	0.1643
Span (equivalent), In.	201.00	8.141
Inb'd equivalent chord, In.	91.585	3.709
Outb'd equivalent chord, In.	50.833	2.059
Ratio movable surface chord/ total surface chord		
At Inb'd equiv. chord	0.400	0.400
At Outb'd equiv. chord	0.400	0.400
Sweep Back Angles, degrees		
Leading Edge	34.83	34.83
Trailing Edge	26.25	26.25
Hingeline	34.83	34.83
Area Moment(Product of Area & $\bar{c}$), Ft^3	610.92	0.0406
Mean Aerodynamic Chord, In.	73.2	2.965

TABLE III. MODEL DIMENSIONAL DATA (Continued)

MODEL COMPONENT: VERTICAL - V8

GENERAL DESCRIPTION: Configuration 140C orbiter vertical tail (identical to configuration 140A/B vertical tail).

MODEL SCALE: 0.0405

DRAWING NUMBER: VL70-0001400, 70-000146B

DIMENSIONS:	FULL SCALE	MODEL SCALE
TOTAL DATA		
Area (Theo.), ft^2		
Planform	413.253	0.678
Span (Theo.), in.	315.72	12.787
Aspect Ratio	1.675	1.675
Rate of Taper	0.507	0.507
Taper Ratio	0.404	0.404
Sweep Back Angles, degrees		
Leading Edge	45.00	45.00
Trailing Edge	26.25	26.25
0.25 Element Line	41.13	41.13
Chords:		
Root (Theo.) WP	268.50	10.874
Tip (Theo.) WP	108.47	4.393
MAC	199.81	8.092
X_o of .25 MAC	1463.35	59.266
Z_o of .25 MAC	635.52	25.739
Y_o of .25 MAC	0.00	0.00
Airfoil Section		
Leading Wedge Angle, deg.	10.00	10.00
Trailing Wedge Angle, deg.	14.92	14.92
Leading Edge Radius	2.00	0.0810
Void Area	13.17	0.022
Blanketed Area	0.0	0.0

TABLE III. MODEL DIMENSIONAL DATA (Continued)

MODEL COMPONENT: WING - W127

GENERAL DESCRIPTION: Configuration 140C orbiter wing, MCR 200-R4, similar to 140A/B wing W116 but with refinements: Improved wing-boot-mid-body fairing (X_o = 940 to X_o = 1040); elevon split line relocated from Y_o = 281 to Y_o = 312.5. MODEL SCALE: 0.0405 DWG.NO.: VL70-000140C,-200B

DIMENSIONS:	FULL SCALE	MODEL SCALE
TOTAL DATA		
Area (Theo.), ft^2		
Planform	2690.00	4.412
Span (Theo.), in.	936.68	37.936
Aspect Ratio	2.265	2.265
Rate of Taper	1.177	1.177
Taper Ratio	0.200	0.200
Dihedral Angle, degrees	3.500	3.500
Incidence Angle, degrees	0.500	0.500
Aerodynamic Twist, degrees		
Sweep Back Angles, degrees		
Leading Edge	45.000	45.000
Trailing Edge	- 10.056	- 10.056
0.25 Element Line	35.209	35.209
Chords:		
Root (Theo.) B.P.0.0.	689.24	27.914
Tip, (Theo.) B.P.	137.85	5.583
MAC	474.81	19.230
X_o of .25 MAC	1136.83	46.042
Z_o of .25 MAC	290.58	11.769
Y_o of .25 MAC	182.13	7.736
EXPOSED DATA		
Area (Theo.), ft^2	1751.50	2.873
Span, (Theo.), in. BP108	720.68	29.188
Aspect Ratio	2.059	2.059
Taper Ratio	0.245	0.245
Chords		
Root BP108	562.09	22.765
Tip 1.00 b/2	137.85	5.583
MAC	392.83	15.910
X_o of .25 MAC	1185.98	48.032
Z_o of .25 MAC	294.30	11.919
Y_o of .25 MAC	251.77	10.197
Airfoil Section (Rockwell Mod NASA) XXXX-64		
Root b/2 =	0.113	0.113
Tip b/2 =	0.120	0.120
Data for (1) of (2) Sides		
Leading Edge Cuff		
Planform Area, ft^2	113.18	0.186
Leading Edge Intersects Fus M.L. @ Sta	500.00	20.250
Leading Edge Intersects Wing @ Sta	1024.00	41.472

TABLE III. MODEL DIMENSIONAL DATA (Concluded)

MODEL COMPONENT: TRANSITION GRIT - X_9

GENERAL DESCRIPTION: Grit located on model nose and all swept surfaces to provide forced boundary layer transition.

NOMINAL GRIT DIAMETER - IN.	
Fuselage	0.0054
All surfaces except fuselage	0.0076
STRIP THICKNESS - IN.	0.10
LOCATION:	
Inches aft of local leading edge (streamwise)	1.00

Notes:

1. Positive directions of force coefficients, moment coefficients, and angles are indicated by arrows
2. For clarity, origins of wind and stability axes have been displaced from the center of gravity

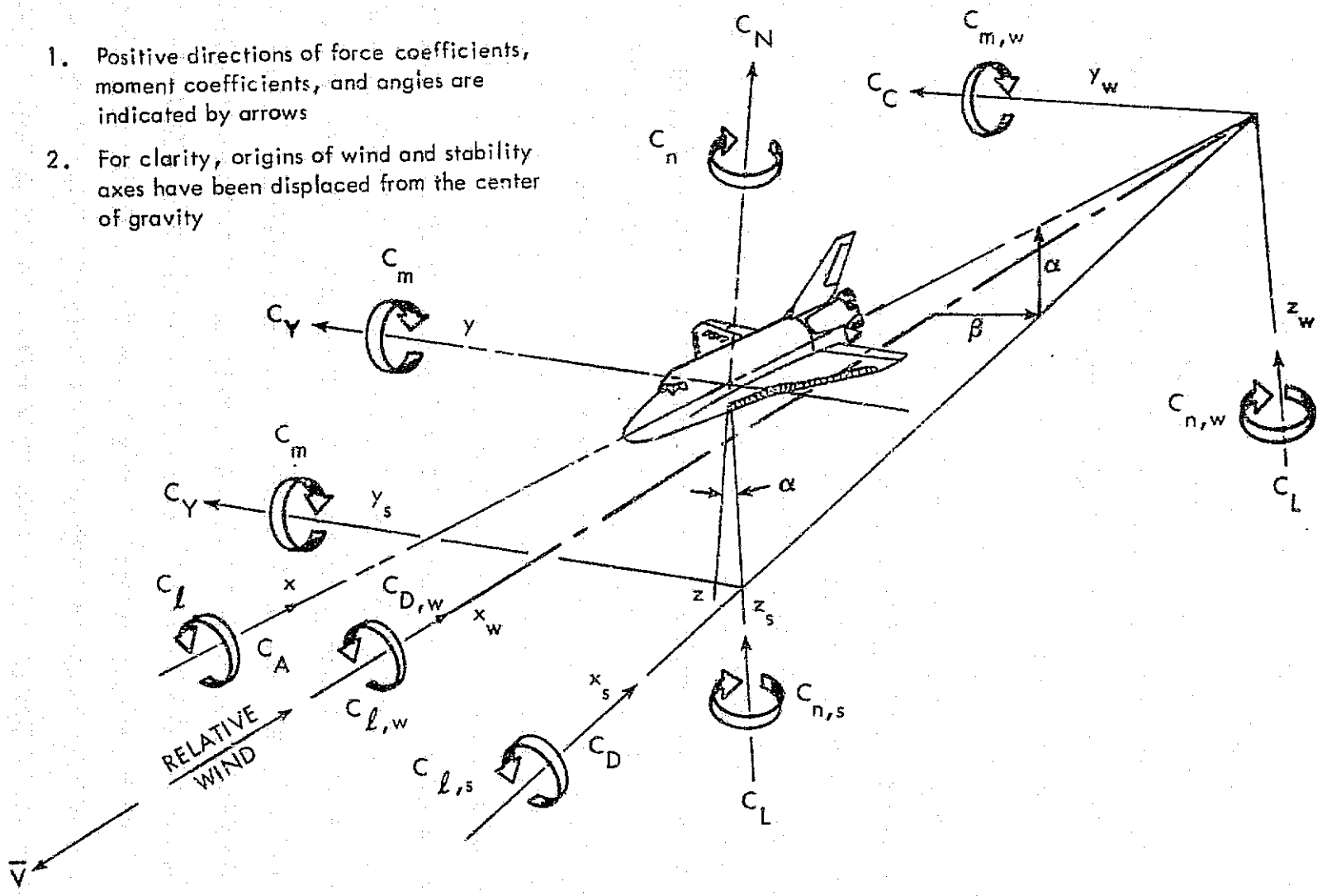

a. Total Vehicle Axis Systems

Figure 1. Axis systems and sign conventions

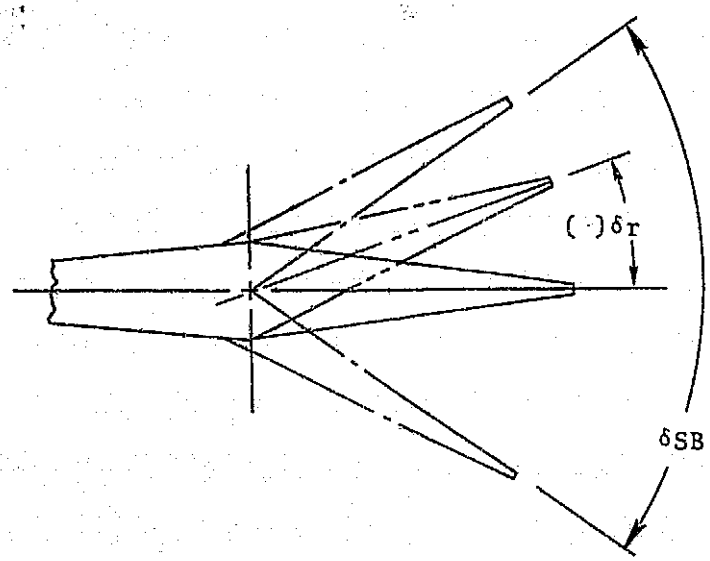

Rudder and
Speed Brake
Deflections

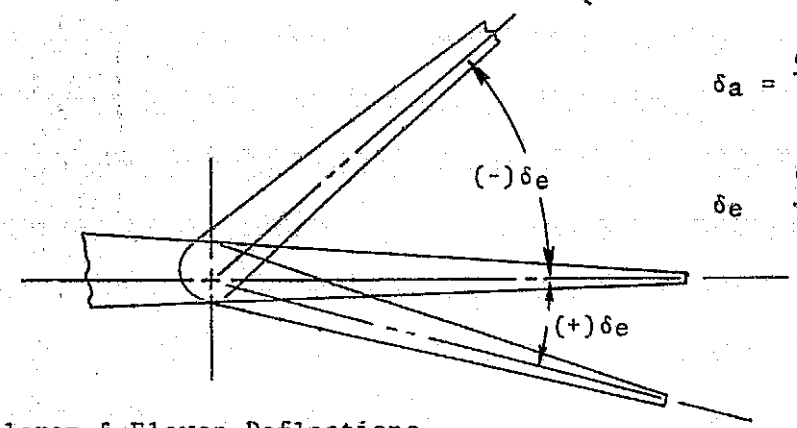

$$\delta a = \frac{\delta eL - \delta eR}{2}$$

$$\delta e \quad \frac{\delta e_{L} + \delta e_{R}}{2}$$

Aileron & Elevon Deflections

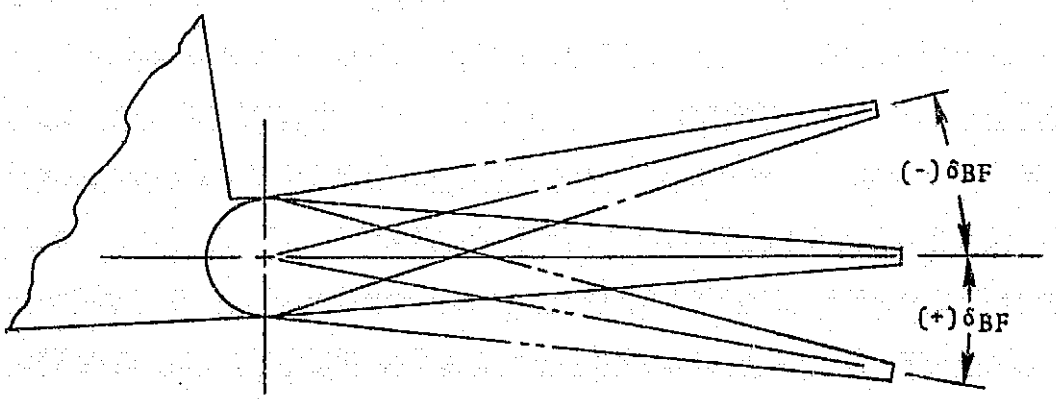

Body Flap Deflections

b. Sign Convention for Control Surfaces

Figure 1. Continued.

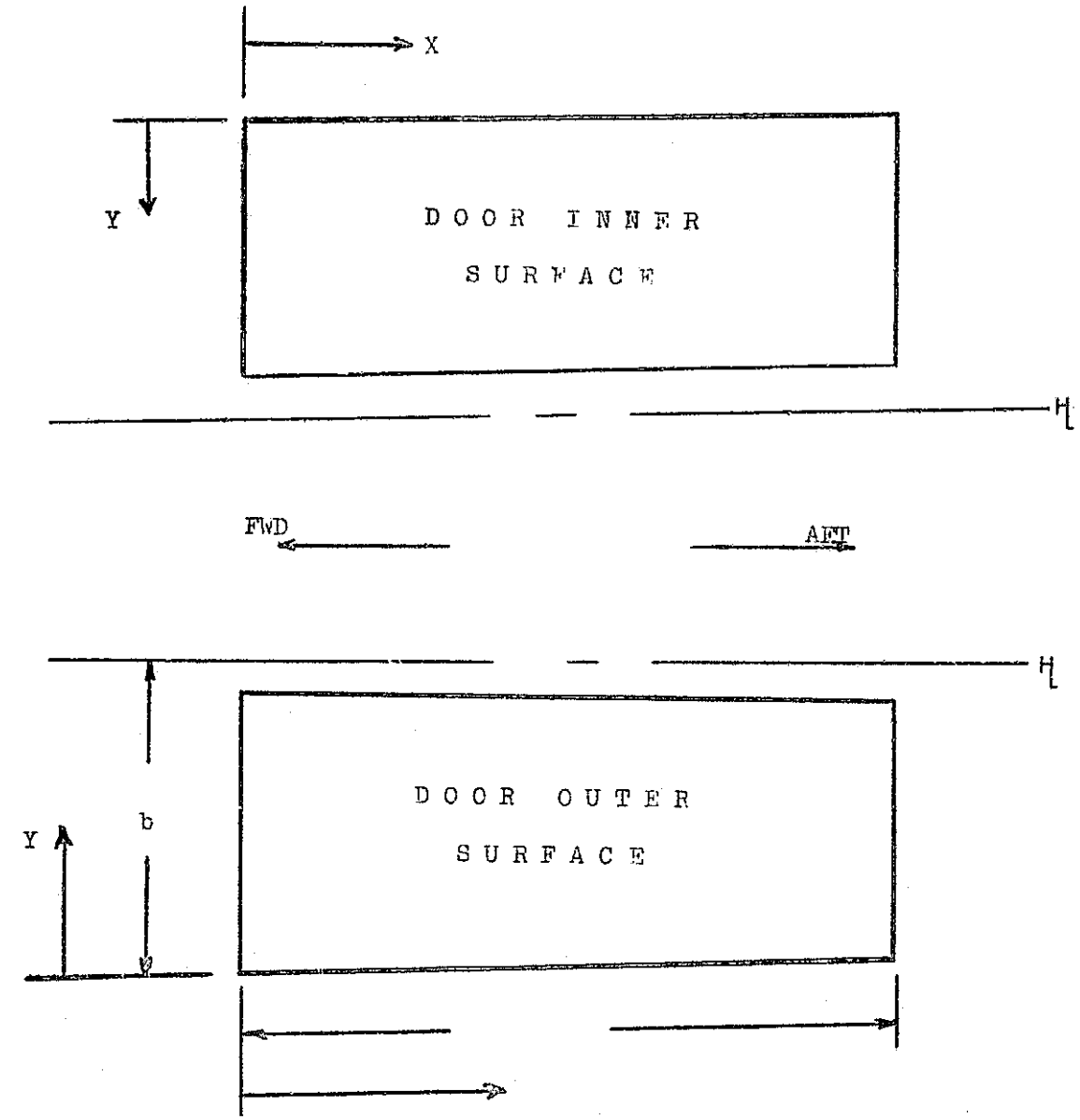

Door pressures located using this coordinate system.

DIMENSION	VALUE, INCHES	
	MAINDOOR	NOSE DOOR
b	2.794	1.154
c	6.116	4.393

c. Gear Door Coordinate System
Figure 1. Continued.

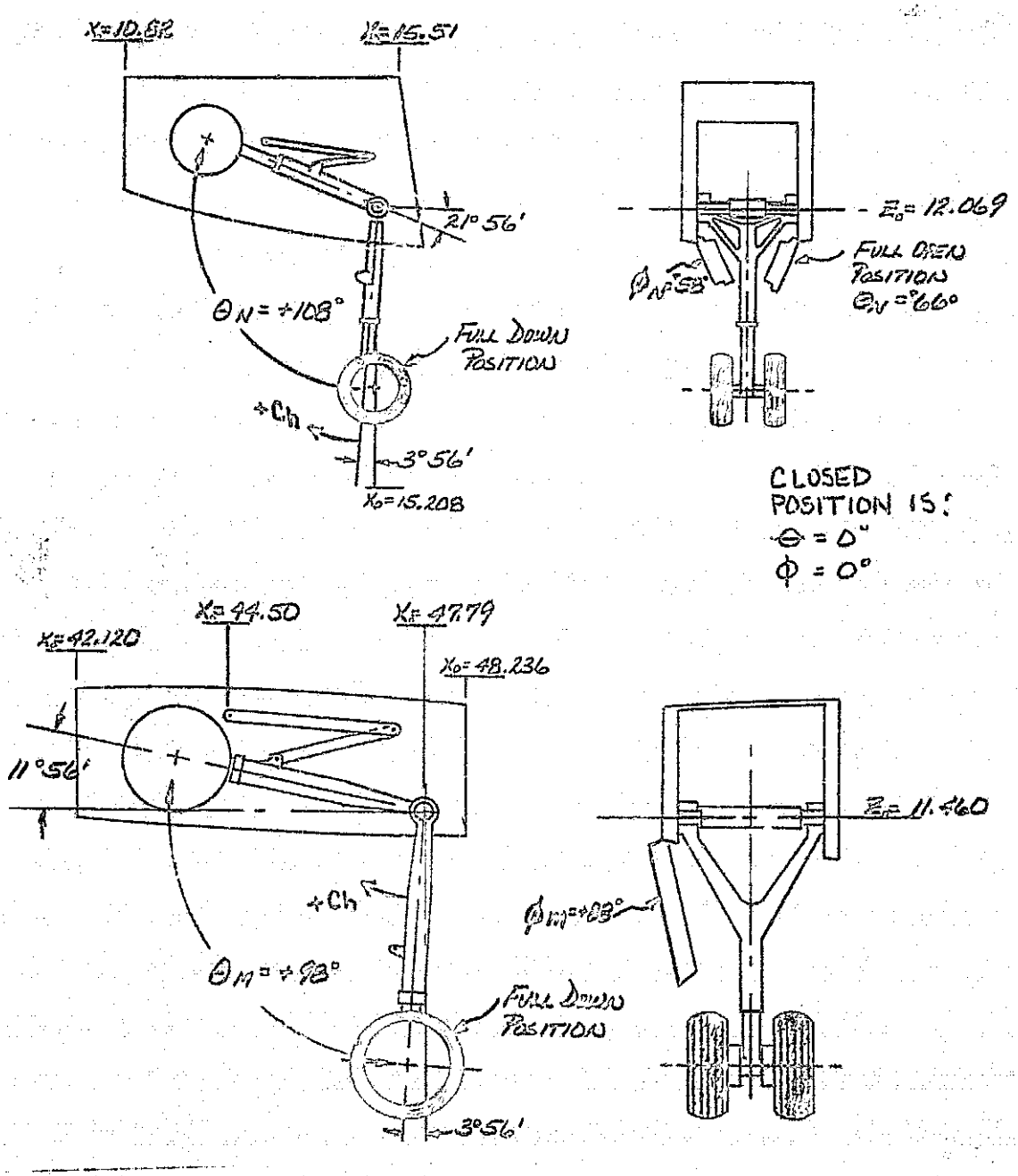

d. Sign Convention for Landing Gear

Figure 1. Concluded.

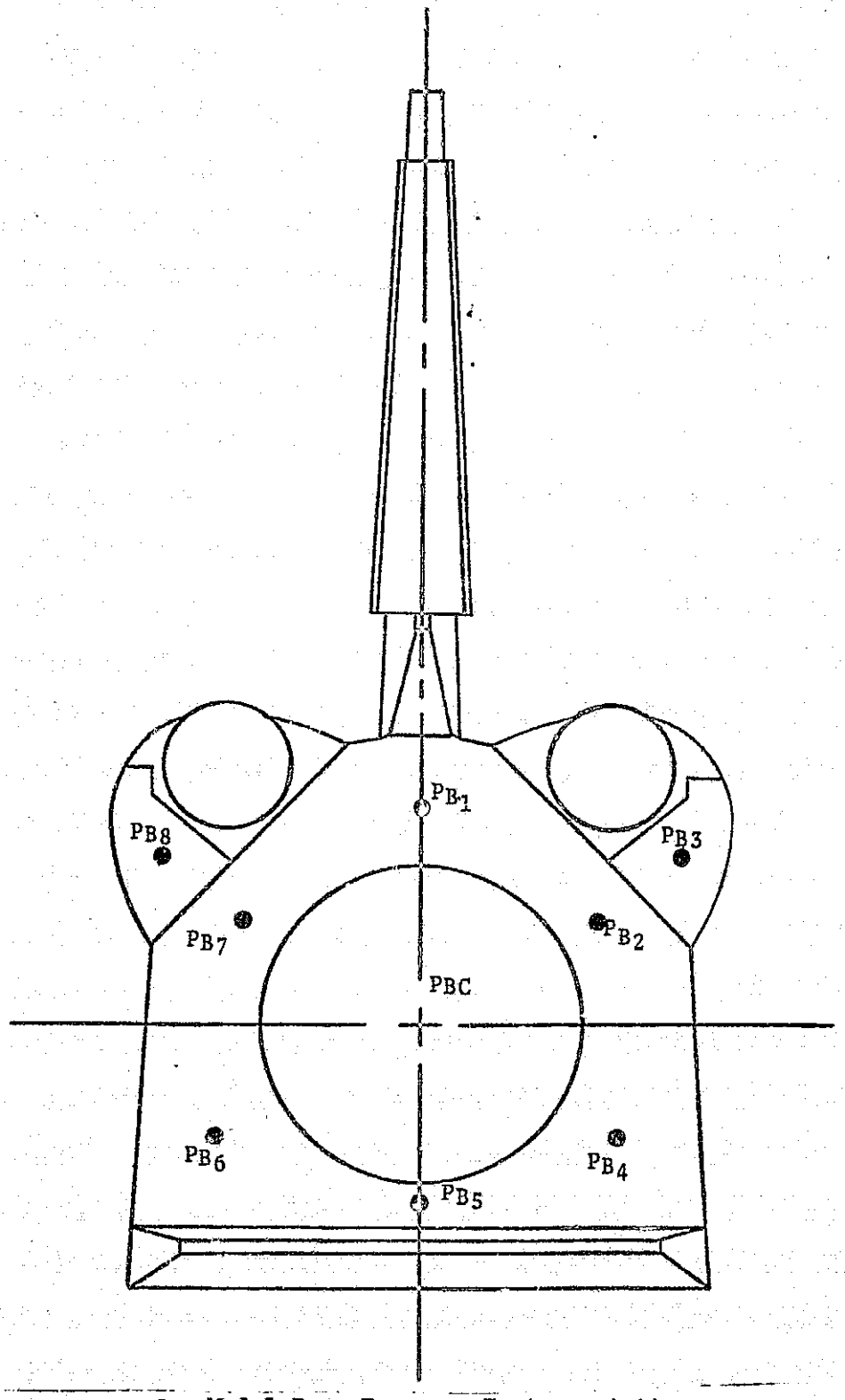

a. Model Base Pressure Instrumentation

Figure 2. Model sketches

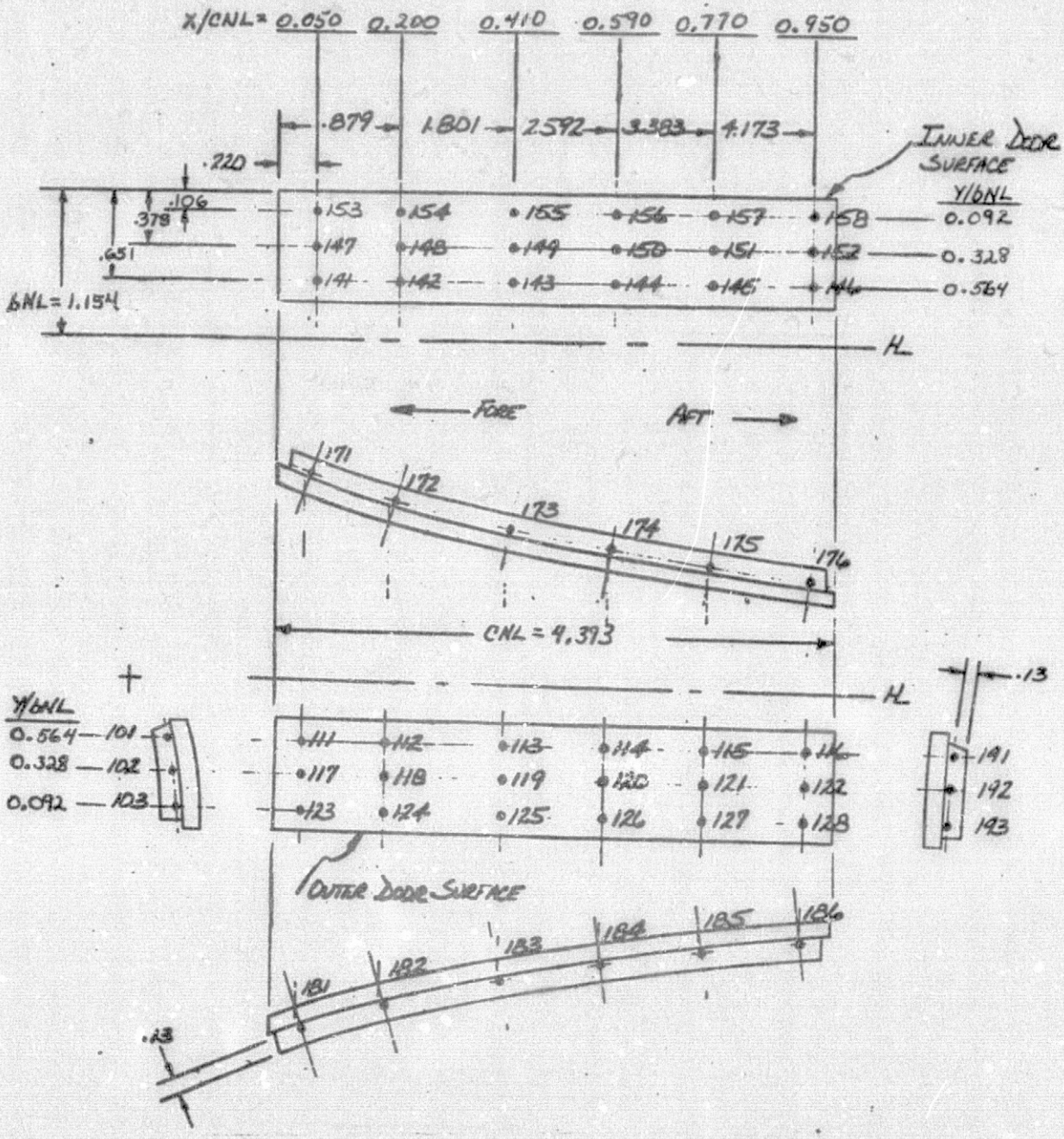

b. L. H. NLG Door Pressure Instrumentation
Figure 2. Continued.

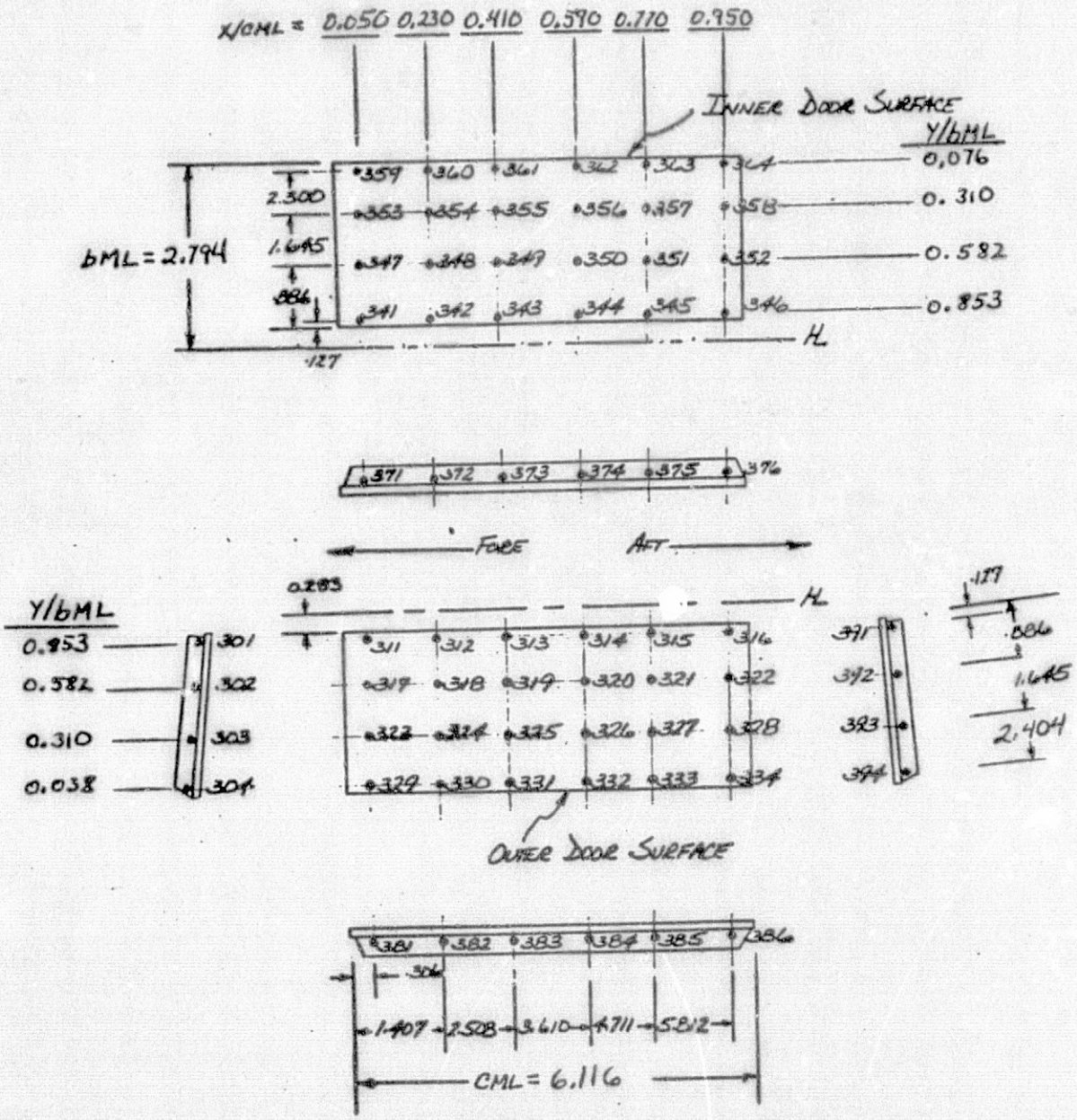

c. L. H. MLG Door Pressure Instrumentation
Figure 2. Continued.

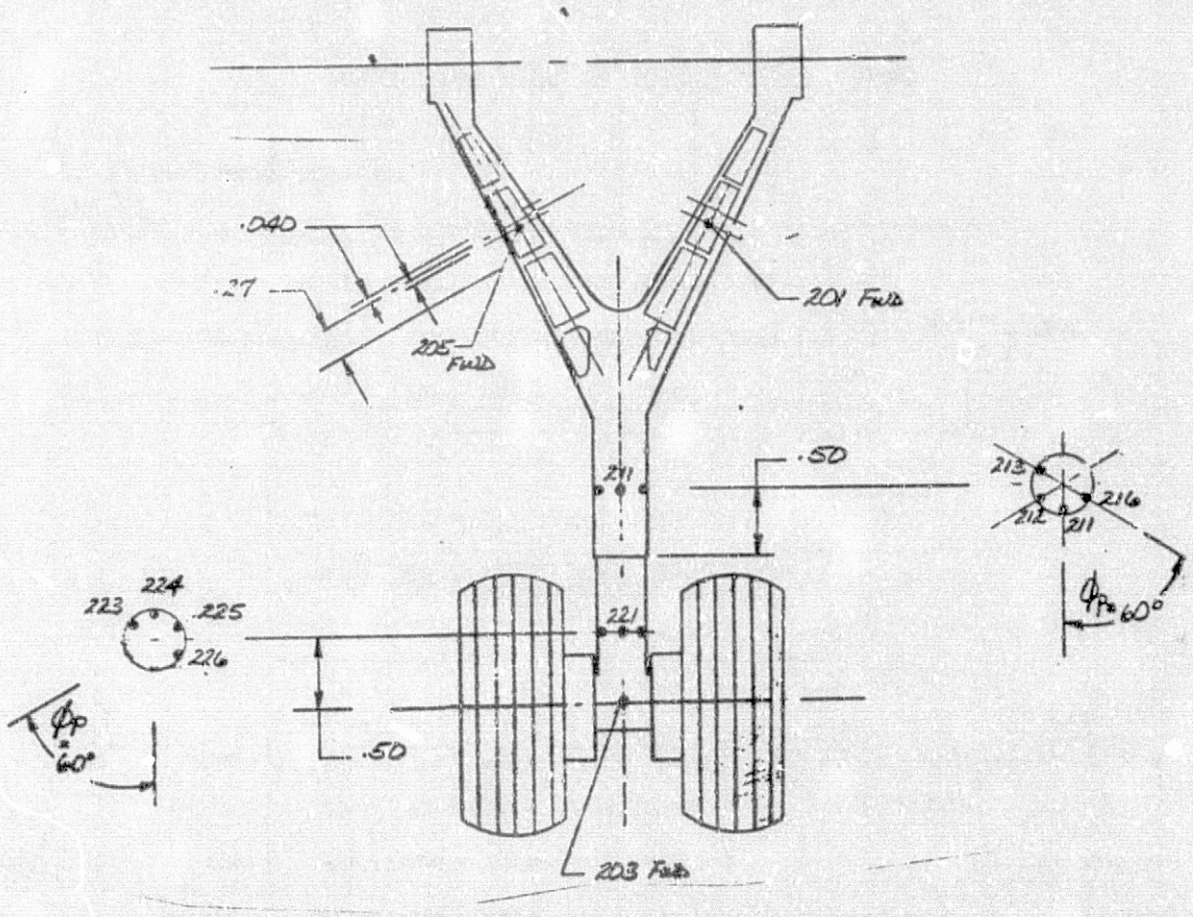

WHEEL WELL TAPS	
TAP NO.	LOCATION
202	Center of left outboard wall of left wheel well
204	Center of rear wall, left wheel well
206	Bottom of inboard wheel, left wheel well
214	Center of front wall, left wheel well
215	Center of right inboard wall of left wheel well
221	Center of ceiling, left wheel well
222	Top of inboard wheel, left wheel well

d. L. H. MLG Strut Pressure Instrumentation
Figure 2. Continued.

ORIGINAL PAGE IS
OF POOR QUALITY

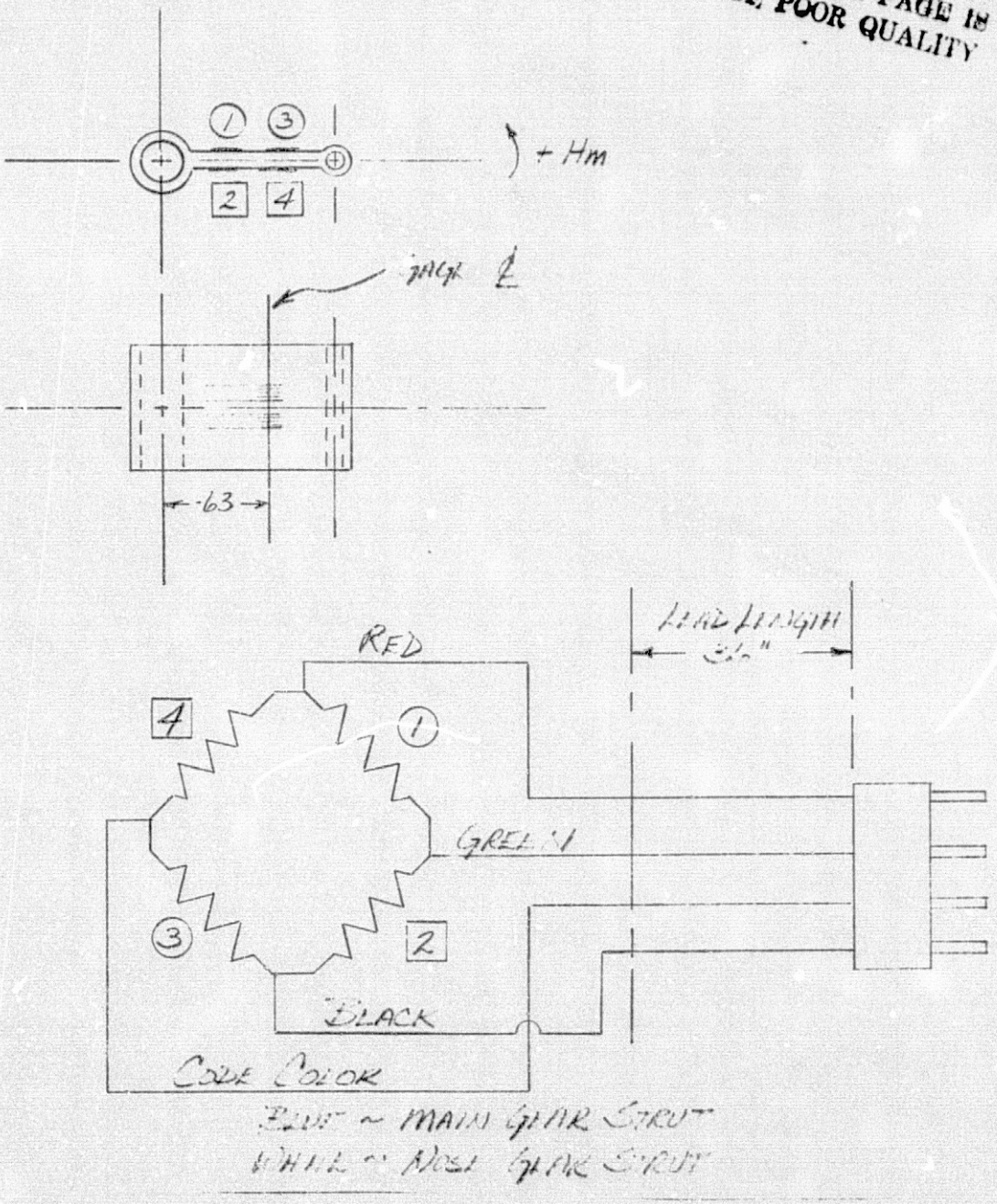

e. Typical Landing Gear Strut Strain Gage Instrumentation
Figure 2. Continued.

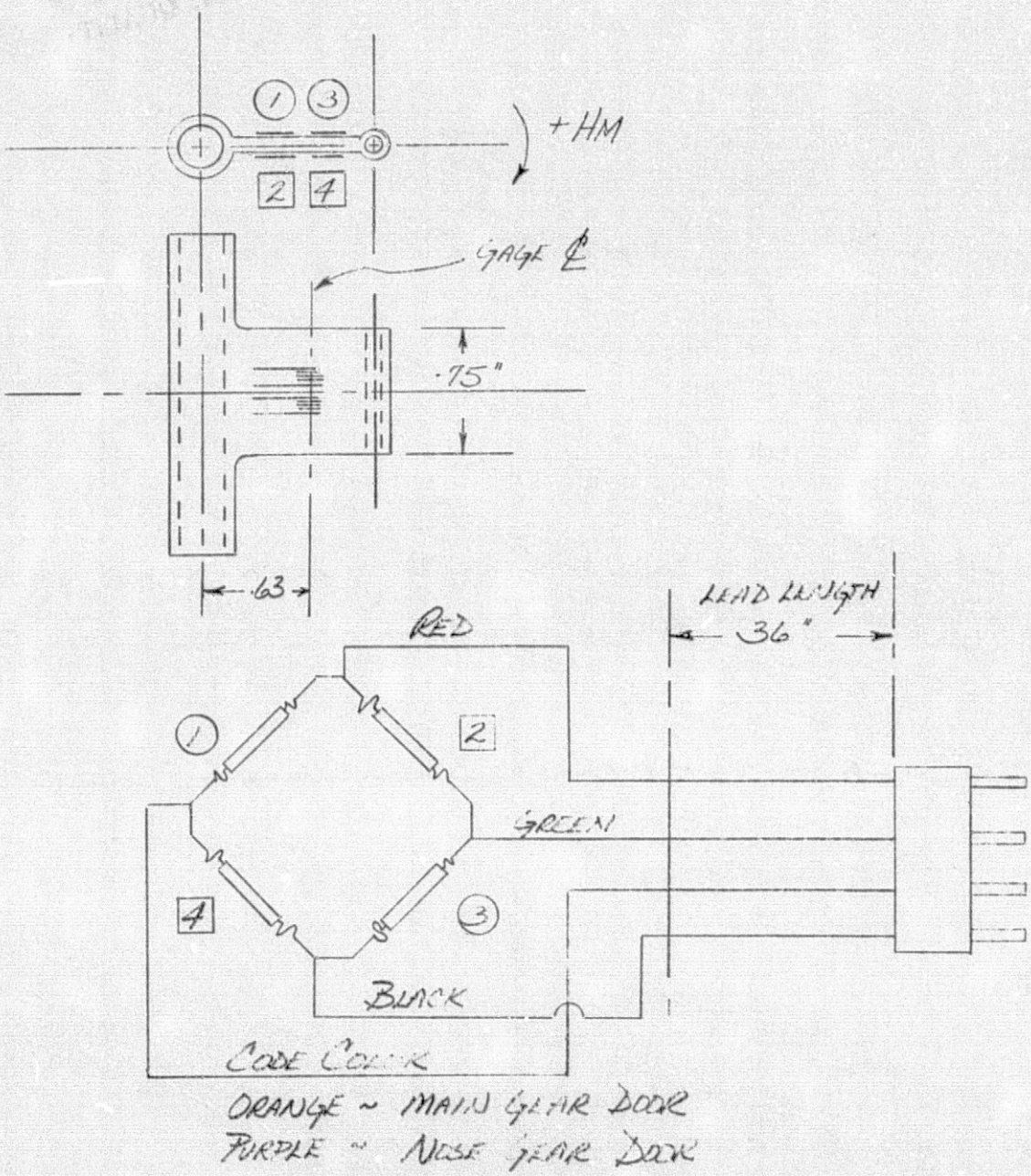

f. Typical Landing Gear Door Strain Gage Instrumentation

Figure 2. Concluded.

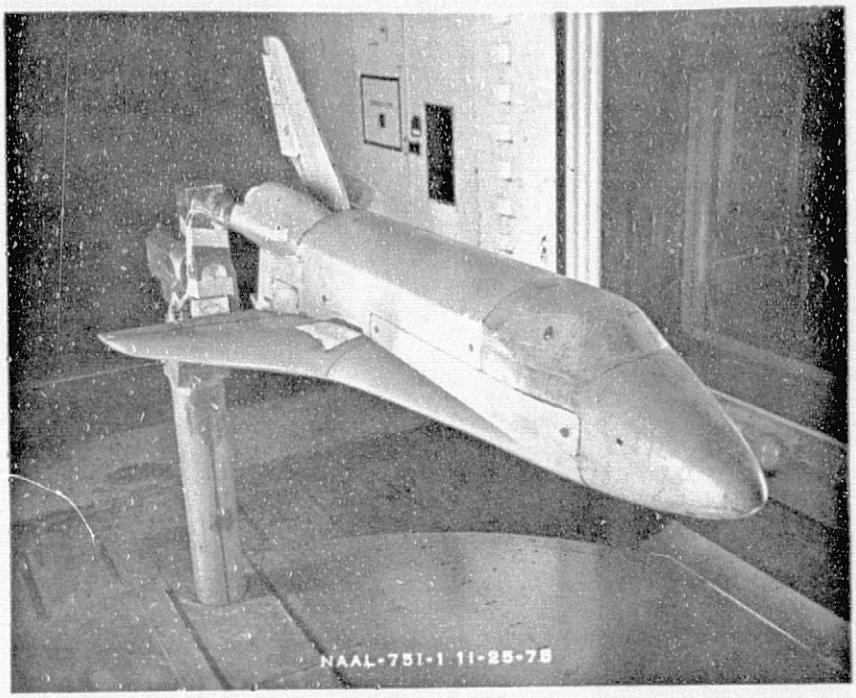

a. NAAL Installation, Front View, Model Configuration $B_{68}C_{12}G_{20}M_{16}N_{28}W_{127}E_{55}F_{10}V_{8}R_{5}X_{9}$

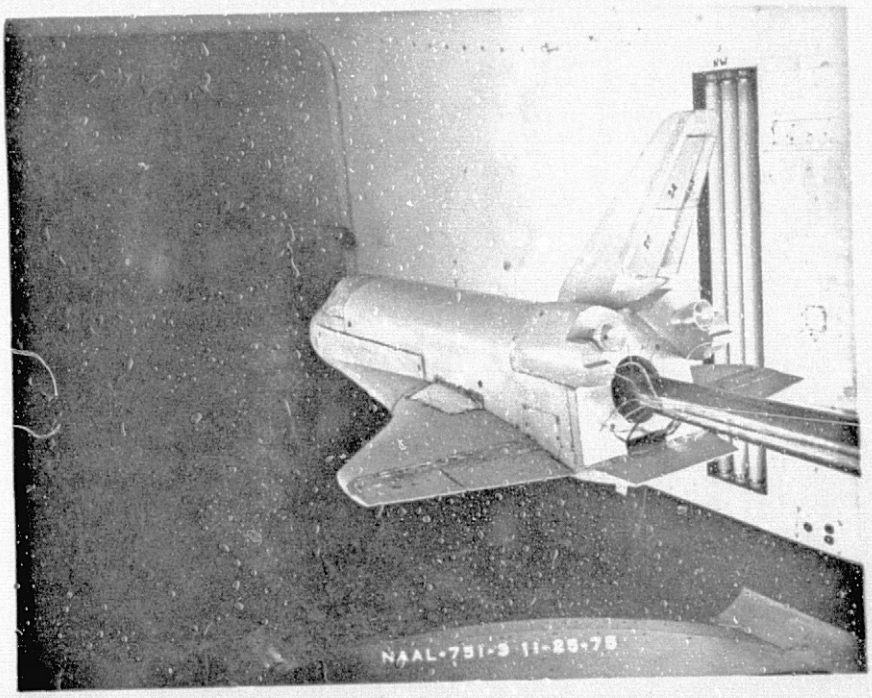

b. NAAL Installation, Rear View, Model Configuration $B_{68}C_{12}G_{20}M_{16}N_{28}W_{127}E_{55}F_{10}V_{8}R_{5}X_{9}$

Figure 3. Model photographs.

ORIGINAL PAGE IS
OF POOR QUALITY

ORIGINAL PAGE IS
OF POOR QUALITY

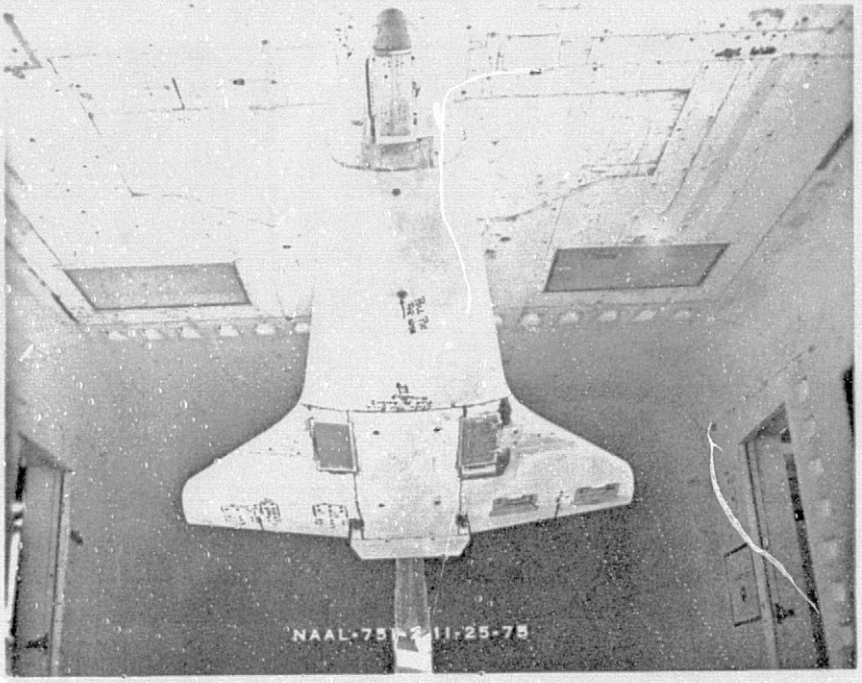

c. NAAL Installation, Bottom View, Model Configuration $B68C_{12}G_{20}M_{16}N_{28}W_{127}E_{55}F_{10}V_8R_5X_9$, Landing Gear Fully Retracted

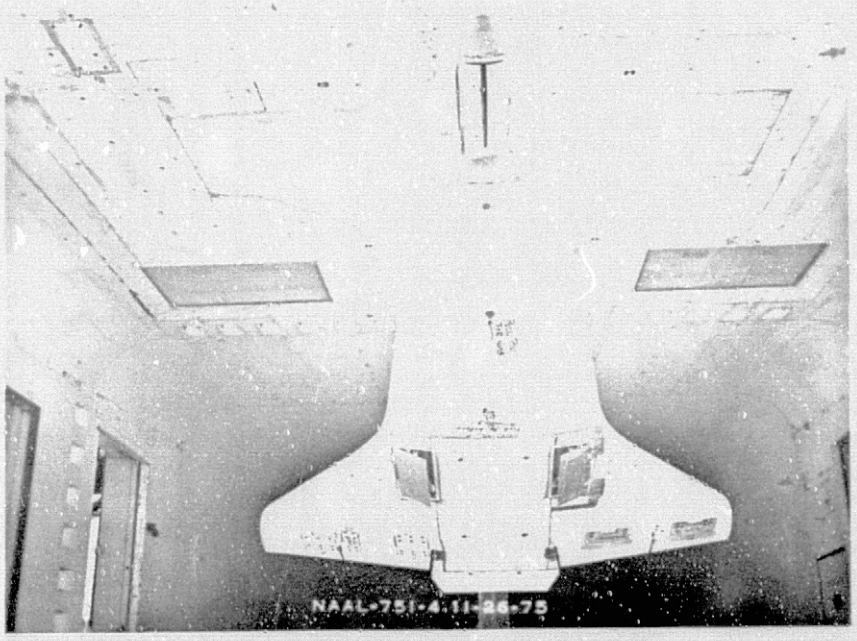

d. NAAL Installation, Bottom View, Model Configuration $B68C_{12}G_{20}M_{16}N_{28}W_{127}E_{55}F_{10}V_8R_5X_9$, Landing Gear Partially Extended

Figure 3. Continued.

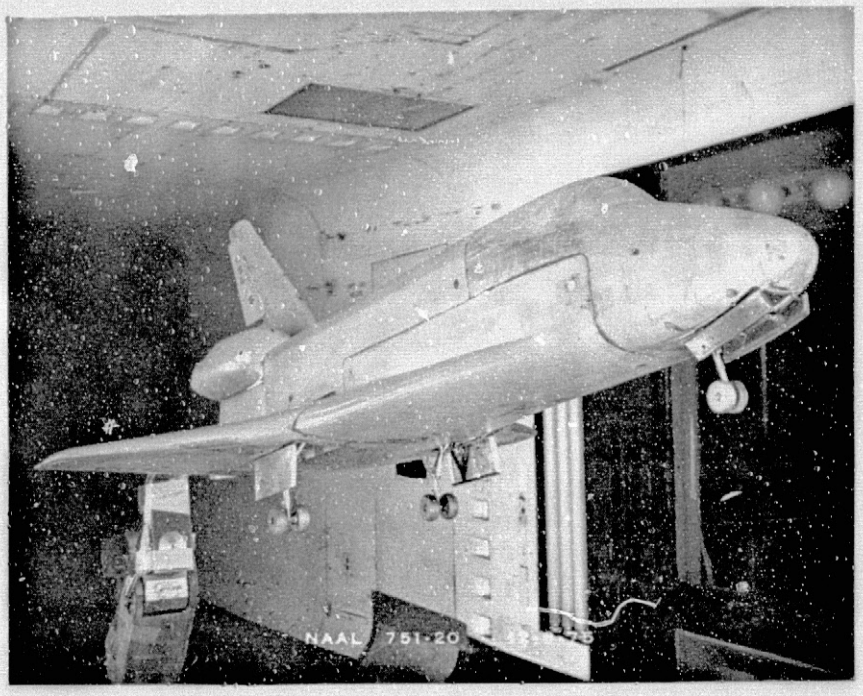

ORIGINAL PAGE IS
OF POOR QUALITY

e. NAAL Installation, Bottom View, Model Configuration $B_{68}C_{12}G_{20}M_{16}N_{28}W_{127}E_{55}F_{10}V_{8}R_{5}X_{9}$, Landing Gear Fully Extended

Figure 3. Concluded.

(Reverse of this page is blank.)

[redacted]NG PAGE BLANK NOT FILMED

APPENDIX

TABULATED SOURCE DATA

Tabulations of plotted data are available on request from Data Management Services.

DATE 27 APR 77 OA163B PRESSURE DATA LISTING (RFPM01) (27 APR 77)

OA163B MAIN GEAR DOOR OUTER SURFACE

REFERENCE DATA

SREF =	2690.0000 SQ.FT.	XMRP =	1076.7000 IN.	XO	
LREF =	474.8100 INCHES	YMRP =	.0000 IN.	YO	
BREF =	936.6800 INCHES	ZMRP =	375.0000 IN.	ZO	
SCALE =	.0405				

PARAMETRIC DATA

SPDBRK =	25.000	BDFLAP =	.000
ELV-L =	.000	ELV-R =	.000
PHI-N =	30.800	THETAN =	5.000
PHI-ML =	32.200	THETML =	5.000
PHI-MR =	32.200	THETMR =	5.000

BETA (1) = -5.040 ALPHA (1) = -2.060 Q(PSF) = 42.911 PO = 2119.2 RUN NO = 1.0000

SECTION (1)MAIN LND GR DR-O DEPENDENT VARIABLE CP

Y/BML	.0380	.3100	.5820	.8530
X/CML				
.050	-.7721	-.7680	-.9867	-.2708
.230	-.1776	-.1462	-.2029	-.2951
.410	-.1989	-.1796	-.2029	-.2445
.590	-.1958	-.1918	-.2009	-.1979
.770	-.2100	-.2070	-.2222	-.2698
.950	-.2313	-.2384	-.2242	-.2222

BETA (1) = -4.040 ALPHA (2) = .010 Q(PSF) = 42.911 PO = 2119.2 RUN NO = 1.0000

SECTION (1)MAIN LND GR DR-O DEPENDENT VARIABLE CP

Y/BML	.0380	.3100	.5820	.8530
X/CML				
.050	-.7833	-.6717	-.8005	-.1768
.230	-.1079	-.1282	-.1140	-.2286
.410	-.1353	-.1231	-.1393	-.1850
.590	-.1454	-.1434	-.1474	-.1414
.770	-.1596	-.1616	-.1738	-.2164
.950	-.1819	-.1931	-.1758	-.1748

BETA (1) = -5.050 ALPHA (3) = 2.070 Q(PSF) = 42.911 PO = 2119.2 RUN NO = 1.0000

SECTION (1)MAIN LND GR DR-O DEPENDENT VARIABLE CP

Y/BML	.0380	.3100	.5820	.8530
X/CML				
.050	-.7148	-.5968	-.6997	-.1013
.230	-.0690	-.0720	-.0519	-.1730
.410	-.0993	-.0771	-.0842	-.1104
.590	-.1064	-.0973	-.0953	-.0821
.770	-.1215	-.1185	-.1245	-.1730
.950	-.1467	-.1528	-.1336	-.1316

OA163B MAIN GEAR DOOR OUTER SURFACE (RFPM01)

BETA (1) = -5.060 ALPHA (4) = 6.210 Q(PSF) = 42.911 PO = 2119.2 RUN NO = 1.0000

SECTION (1)MAIN LND GR DR-O DEPENDENT VARIABLE CP

Y/BML	.0380	.3100	.5820	.8530
X/CML				
.050	-.5649	-.4655	-.4929	-.2912
.230	.0096	.0106	.0289	-.0501
.410	-.0055	.0218	.0319	.0269
.590	-.0156	-.0034	.0086	.0248
.770	-.0338	-.0318	-.0308	-.0632
.950	-.0602	-.0663	-.0450	-.0521

BETA (1) = -5.060 ALPHA (5) = 8.280 Q(PSF) = 42.911 PO = 2119.2 RUN NO = 1.0000

SECTION (1)MAIN LND GR DR-O DEPENDENT VARIABLE CP

Y/BML	.0380	.3100	.5820	.8530
X/CML				
.050	-.4320	-.4097	-.4047	-.3865
.230	.0450	.0531	.0409	.0197
.410	.0389	.0713	.0814	.0884
.590	.0318	.0440	.0571	.0814
.770	.0106	.0147	.0197	-.0075
.950	-.0166	-.0257	.0005	-.0044

BETA (1) = -5.050 ALPHA (6) = 10.330 Q(PSF) = 42.911 PO = 2119.2 RUN NO = 1.0000

SECTION (1)MAIN LND GR DR-O DEPENDENT VARIABLE CP

Y/BML	.0380	.3100	.5820	.8530
X/CML				
.050	-.2876	-.3528	-.3117	-.4502
.230	.0818	.1079	.0658	.0899
.410	.0848	.1190	.1310	.1471
.590	.0728	.0909	.1059	.1330
.770	.0527	.0557	.0658	.0527
.950	.0236	.0156	.0417	.0356

OA1638 MAIN GEAR DOOR OUTER SURFACE (RFPM01)

BETA (2) = -4.040 ALPHA (1) = -2.050 Q(PSF) = 42.777 PO = 2119.2 RUN NO = 2.0000

SECTION (1)MAIN LND GR DR-O DEPENDENT VARIABLE CP

Y/BML	.0380	.3100	.5820	.8530
X/CML				
.050	-.7858	-.7434	-.9289	-.2696
.230	-.1587	-.1557	-.1899	-.2877
.410	-.1829	-.1708	-.1990	-.2524
.590	-.1869	-.1899	-.1990	-.2020
.770	-.1990	-.2030	-.2172	-.2605
.950	-.2202	-.2343	-.2182	-.2151

BETA (2) = -4.040 ALPHA (2) = .010 Q(PSF) = 42.777 PO = 2119.2 RUN NO = 2.0000

SECTION (1)MAIN LND GR DR-O DEPENDENT VARIABLE CP

Y/BML	.0380	.3100	.5820	.8530
X/CML				
.050	-.7733	-.6649	-.7865	-.1746
.230	-.1057	-.1270	-.1108	-.2253
.410	-.1361	-.1230	-.1382	-.1848
.590	-.1442	-.1412	-.1453	-.1422
.770	-.1544	-.1594	-.1716	-.2141
.950	-.1797	-.1919	-.1736	-.1726

BETA (2) = -4.040 ALPHA (3) = 2.070 Q(PSF) = 42.777 PO = 2119.2 RUN NO = 2.0000

SECTION (1)MAIN LND GR DR-O DEPENDENT VARIABLE CP

Y/BML	.0380	.3100	.5820	.8530
X/CML				
.050	-.7445	-.5953	-.6796	-.1385
.230	-.0664	-.0847	-.0501	-.1710
.410	-.0918	-.0745	-.0926	-.1253
.590	-.0989	-.0968	-.0958	-.0887
.770	-.1182	-.1182	-.1253	-.1618
.950	-.1415	-.1507	-.1334	-.1273

OA163B MAIN GEAR DOOR OUTER SURFACE (RFPM01)

BETA (2) = -4.040 ALPHA (4) = 4.130 Q(PSF) = 42.777 PO = 2119.2 RUN NO = 2.0000

SECTION (1)MAIN LND GR DR-O DEPENDENT VARIABLE CP

Y/BML	.0380	.3100	.5820	.8530
X/CML				
.050	-.6679	-.5391	-.5776	-.2905
.230	-.0349	-.0481	-.0166	-.1079
.410	-.0461	-.0278	-.0237	-.0491
.590	-.0562	-.0481	-.0440	-.0329
.770	-.0755	-.0724	-.0785	-.1171
.950	-.0988	-.1089	-.0876	-.0897

BETA (2) = -4.040 ALPHA (5) = 6.180 Q(PSF) = 42.777 PO = 2119.2 RUN NO = 2.0000

SECTION (1)MAIN LND GR DR-O DEPENDENT VARIABLE CP

Y/BML	.0380	.3100	.5820	.8530
X/CML				
.050	-.5455	-.4817	-.4908	-.4047
.230	.0036	-.0045	-.0055	-.0541
.410	-.0024	.0238	.0289	.0177
.590	-.0136	-.0034	.0066	.0228
.770	-.0298	-.0288	-.0288	-.0582
.950	-.0551	-.0663	-.0430	-.0460

BETA (2) = -4.040 ALPHA (6) = 8.270 Q(PSF) = 42.777 PO = 2119.2 RUN NO = 2.0000

SECTION (1)MAIN LND GR DR-O DEPENDENT VARIABLE CP

Y/BML	.0380	.3100	.5820	.8530
X/CML				
.050	-.4103	-.4235	-.4022	-.4641
.230	.0401	.0543	.0086	.0178
.410	.0462	.0725	.0807	.0827
.590	.0330	.0441	.0553	.0807
.770	.0137	.0147	.0188	-.0014
.950	-.0136	-.0248	-.0004	-.0004

OA163B MAIN GEAR DOOR OUTER SURFACE (RFPM01)

BETA (3) = -2.960 ALPHA (1) = -2.070 Q(PSF) = 42.885 PO = 2119.2 RUN NO = 3.0000

SECTION (1)MAIN LND GR DR-O DEPENDENT VARIABLE CP

Y/BML	.0380	.3100	.5820	.8530
X/CML				
.050	-.8326	-.7172	-.8758	-.2614
.230	-.1409	-.1791	-.1711	-.2845
.410	-.1691	-.1681	-.1891	-.2544
.590	-.1781	-.1831	-.1942	-.2062
.770	-.1911	-.1992	-.2142	-.2504
.950	-.2132	-.2283	-.2092	-.2062

BETA (3) = -2.960 ALPHA (2) = .000 Q(PSF) = 42.885 PO = 2119.2 RUN NO = 3.0000

SECTION (1)MAIN LND GR DR-O DEPENDENT VARIABLE CP

Y/BML	.0380	.3100	.5820	.8530
X/CML				
.050	-.8081	-.6595	-.7596	-.1995
.230	-.1025	-.1359	-.1035	-.2238
.410	-.1257	-.1197	-.1318	-.1884
.590	-.1359	-.1379	-.1460	-.1490
.770	-.1500	-.1571	-.1692	-.2046
.950	-.1743	-.1884	-.1733	-.1672

BETA (3) = -2.960 ALPHA (3) = 2.050 Q(PSF) = 42.885 PO = 2119.2 RUN NO = 3.0000

SECTION (1)MAIN LND GR DR-O DEPENDENT VARIABLE CP

Y/BML	.0380	.3100	.5820	.8530
X/CML				
.050	-.7545	-.6022	-.6662	-.2724
.230	-.0714	-.0999	-.0603	-.1719
.410	-.0857	-.0745	-.0785	-.1263
.590	-.0958	-.0938	-.0968	-.0928
.770	-.1090	-.1161	-.1273	-.1567
.950	-.1354	-.1496	-.1323	-.1263

OA163B MAIN GEAR DOOR OUTER SURFACE (RFPM01)

BETA (3) = -2.960 ALPHA (4) = 4.130 Q(PSF) = 42.885 PO = 2119.2 RUN NO = 3.0000

SECTION (1)MAIN LND GR DR-O DEPENDENT VARIABLE CP

Y/BML	.0380	.3100	.5820	.8530
X/CML				
.050	-.6577	-.5473	-.5746	-.4065
.230	-.0358	-.0602	-.0450	-.1138
.410	-.0409	-.0207	-.0207	-.0520
.590	-.0510	-.0460	-.0419	-.0338
.770	-.0642	-.0713	-.0733	-.1077
.950	-.0926	-.1037	-.0865	-.0845

BETA (3) = -2.960 ALPHA (5) = 6.190 Q(PSF) = 42.885 PO = 2119.2 RUN NO = 3.0000

SECTION (1)MAIN LND GR DR-O DEPENDENT VARIABLE CP

Y/BML	.0380	.3100	.5820	.8530
X/CML				
.050	-.5407	-.4930	-.4870	-.4677
.230	-.0004	-.0136	-.0359	-.0551
.410	-.0004	.0259	.0279	.0157
.590	-.0126	-.0014	.0056	.0198
.770	-.0288	-.0278	-.0278	-.0531
.950	-.0572	-.0673	-.0420	-.0420

BETA (3) = -2.960 ALPHA (6) = 8.270 Q(PSF) = 42.885 PO = 2119.2 RUN NO = 3.0000

SECTION (1)MAIN LND GR DR-O DEPENDENT VARIABLE CP

Y/BML	.0380	.3100	.5820	.8530
X/CML				
.050	-.4042	-.4375	-.3962	-.5261
.230	.0347	.0448	-.0215	.0186
.410	.0408	.0750	.0791	.0791
.590	.0317	.0469	.0569	.0781
.770	.0136	.0136	.0207	.0045
.950	-.0135	-.0256	-.0004	.0005

OA163B MAIN GEAR DOOR OUTER SURFACE (RFPM01)

BETA (4) = -2.010 ALPHA (1) = -2.080 Q(PSF) = 42.825 PO = 2114.9 RUN NO = 4.0000

SECTION (1)MAIN LND GR DR-O DEPENDENT VARIABLE CP

Y/BML	.0380	.3100	.5820	.8530
X/CML				
.050	-.8325	-.7164	-.8457	-.2579
.230	-.1337	-.1822	-.1579	-.2832
.410	-.1569	-.1519	-.1832	-.2549
.590	-.1670	-.1680	-.1913	-.2094
.770	-.1771	-.1812	-.2094	-.2407
.950	-.1993	-.2084	-.2074	-.2004

BETA (4) = -2.010 ALPHA (2) = -.010 Q(PSF) = 42.825 PO = 2114.9 RUN NO = 4.0000

SECTION (1)MAIN LND GR DR-O DEPENDENT VARIABLE CP

Y/BML	.0380	.3100	.5820	.8530
X/CML				
.050	-.8258	-.6581	-.7389	-.2802
.230	-.1065	-.1509	-.1034	-.2368
.410	-.1216	-.1136	-.1237	-.1903
.590	-.1317	-.1327	-.1408	-.1519
.770	-.1449	-.1509	-.1641	-.1924
.950	-.1701	-.1822	-.1671	-.1590

BETA (4) = -2.010 ALPHA (3) = 2.050 Q(PSF) = 42.825 PO = 2114.9 RUN NO = 4.0000

SECTION (1)MAIN LND GR DR-O DEPENDENT VARIABLE CP

Y/BML	.0380	.3100	.5820	.8530
X/CML				
.050	-.7422	-.6076	-.6491	-.4022
.230	-.0723	-.1148	-.0854	-.1765
.410	-.0793	-.0682	-.0743	-.1289
.590	-.0884	-.0895	-.0935	-.0955
.770	-.1036	-.1117	-.1208	-.1481
.950	-.1289	-.1441	-.1279	-.1228

OA163B MAIN GEAR DOOR OUTER SURFACE (RFPM01)

BETA (4) = -2.020 ALPHA (4) = 4.140 Q(PSF) = 42.825 PO = 2114.9 RUN NO = 4.0000

SECTION (1)MAIN LND GR DR-O DEPENDENT VARIABLE CP

Y/BML	.0380	.3100	.5820	.8530
X/CML				
.050	-.6423	-.5582	-.5683	-.4922
.230	-.0389	-.0724	-.0825	-.1180
.410	-.0400	-.0187	-.0227	-.0562
.590	-.0491	-.0440	-.0440	-.0369
.770	-.0643	-.0694	-.0704	-.0988
.950	-.0907	-.1028	-.0836	-.0795

BETA (4) = -2.020 ALPHA (5) = 6.220 Q(PSF) = 42.825 PO = 2114.9 RUN NO = 4.0000

SECTION (1)MAIN LND GR DR-O DEPENDENT VARIABLE CP

Y/BML	.0380	.3100	.5820	.8530
X/CML				
.050	-.5119	-.5058	-.4835	-.5332
.230	-.0075	-.0146	-.0684	-.0501
.410	-.0004	.0299	.0269	.0107
.590	-.0116	.0005	.0076	.0208
.770	-.0248	-.0278	-.0227	-.0420
.950	-.0552	-.0664	-.0410	-.0369

BETA (4) = -2.020 ALPHA (6) = 8.280 Q(PSF) = 42.825 PO = 2114.9 RUN NO = 4.0000

SECTION (1)MAIN LND GR DR-O DEPENDENT VARIABLE CP

Y/BML	.0380	.3100	.5820	.8530
X/CML				
.050	-.4059	-.4544	-.3998	-.5494
.230	.0217	.0288	-.0510	.0056
.410	.0268	.0683	.0753	.0693
.590	.0228	.0430	.0551	.0743
.770	.0035	.0126	.0207	.0126
.950	-.0257	-.0287	.0025	.0035

OA163B MAIN GEAR DOOR OUTER SURFACE (RFPH01)

BETA (5) = -1.020 ALPHA (1) = -2.080 Q(PSF) = 42.920 PO = 2115.0 RUN NO = 5.0000

SECTION (1)MAIN LND GR DR-O DEPENDENT VARIABLE CP

Y/BML	.0380	.3100	.5820	.8530
X/CML				
.050	-.8909	-.7208	-.8265	-.2932
.230	-.1393	-.1946	-.1584	-.3002
.410	-.1554	-.1564	-.1785	-.2600
.590	-.1654	-.1755	-.1916	-.2167
.770	-.1785	-.1926	-.2087	-.2338
.950	-.2006	-.2208	-.2067	-.1936

BETA (5) = -1.020 ALPHA (2) = .010 Q(PSF) = 42.920 PO = 2115.0 RUN NO = 5.0000

SECTION (1)MAIN LND GR DR-O DEPENDENT VARIABLE CP

Y/BML	.0380	.3100	.5820	.8530
X/CML				
.050	-.8303	-.6623	-.7220	-.3931
.230	-.1067	-.1654	-.1229	-.2433
.410	-.1138	-.1087	-.1229	-.1947
.590	-.1259	-.1310	-.1411	-.1522
.770	-.1391	-.1512	-.1603	-.1816
.950	-.1633	-.1795	-.1633	-.1492

BETA (5) = -1.020 ALPHA (3) = 2.070 Q(PSF) = 42.920 PO = 2115.0 RUN NO = 5.0000

SECTION (1)MAIN LND GR DR-O DEPENDENT VARIABLE CP

Y/BML	.0380	.3100	.5820	.8530
X/CML				
.050	-.7405	-.6200	-.6453	-.4914
.230	-.0733	-.1290	-.1168	-.1816
.410	-.0763	-.0611	-.0692	-.1290
.590	-.0865	-.0854	-.0925	-.0956
.770	-.1016	-.1097	-.1158	-.1391
.950	-.1280	-.1411	-.1239	-.1178

OA163B MAIN GEAR DOOR OUTER SURFACE (RFPM01)

BETA (5) = -1.020 ALPHA (4) = 4.130 Q(PSF) = 42.920 PO = 2115.0 RUN NO = 5.0000

SECTION (1)MAIN LND GR DR-O DEPENDENT VARIABLE CP

Y/BML	.0380	.3100	.5820	.8530
X/CML				
.050	-.6247	-.5672	-.5631	-.5410
.230	-.0458	-.0791	-.1103	-.1164
.410	-.0428	-.0165	-.0216	-.0579
.590	-.0508	-.0428	-.0417	-.0377
.770	-.0649	-.0690	-.0700	-.0891
.950	-.0932	-.1043	-.0811	-.0750

BETA (5) = -1.030 ALPHA (5) = 6.180 Q(PSF) = 42.920 PO = 2115.0 RUN NO = 5.0000

SECTION (1)MAIN LND GR DR-O DEPENDENT VARIABLE CP

Y/BML	.0380	.3100	.5820	.8530
X/CML				
.050	-.5184	-.5225	-.4790	-.5801
.230	-.0186	-.0247	-.0894	-.0520
.410	-.0206	.0268	.0248	.0066
.590	-.0227	-.0044	.0066	.0207
.770	-.0388	-.0318	-.0247	-.0338
.950	-.0662	-.0702	-.0399	-.0378

BETA (5) = -1.030 ALPHA (6) = 8.260 Q(PSF) = 42.920 PO = 2115.0 RUN NO = 5.0000

SECTION (1)MAIN LND GR DR-O DEPENDENT VARIABLE CP

Y/BML	.0380	.3100	.5820	.8530
X/CML				
.050	-.4133	-.4586	-.3962	-.5573
.230	.0066	.0106	-.0850	-.0115
.410	-.0155	.0640	.0670	.0640
.590	-.0064	.0388	.0569	.0720
.770	-.0185	.0086	.0196	.0186
.950	-.0437	-.0306	-.0004	.0045

OA163B MAIN GEAR DOOR OUTER SURFACE (RFPM01)

BETA (6) = .000 ALPHA (1) = -2.050 Q(PSF) = 43.418 PO = 2113.6 RUN NO = 6.0000

SECTION (1)MAIN LND GR DR-O DEPENDENT VARIABLE CP

Y/BML	.0380	.3100	.5820	.8530
X/CML				
.050	-.8869	-.7185	-.7977	-.3685
.230	-.1338	-.2120	-.1679	-.3073
.410	-.1458	-.1478	-.1709	-.2601
.590	-.1568	-.1669	-.1869	-.2150
.770	-.1689	-.1829	-.2000	-.2200
.950	-.1919	-.2110	-.1980	-.1839

BETA (6) = .000 ALPHA (2) = .000 Q(PSF) = 43.418 PO = 2113.6 RUN NO = 6.0000

SECTION (1)MAIN LND GR DR-O DEPENDENT VARIABLE CP

Y/BML	.0380	.3100	.5820	.8530
X/CML				
.050	-.8155	-.6703	-.7133	-.4950
.230	-.1075	-.1806	-.1526	-.2487
.410	-.1095	-.1045	-.1206	-.1987
.590	-.1236	-.1276	-.1396	-.1566
.770	-.1356	-.1466	-.1606	-.1776
.950	-.1596	-.1766	-.1616	-.1516

BETA (6) = .000 ALPHA (3) = 2.060 Q(PSF) = 43.418 PO = 2113.6 RUN NO = 6.0000

SECTION (1)MAIN LND GR DR-O DEPENDENT VARIABLE CP

Y/BML	.0380	.3100	.5820	.8530
X/CML				
.050	-.7082	-.6242	-.6342	-.5352
.230	-.0804	-.1324	-.1454	-.1803
.410	-.0774	-.0574	-.0704	-.1294
.590	-.0874	-.0824	-.0874	-.0944
.770	-.1014	-.1044	-.1114	-.1294
.950	-.1264	-.1404	-.1194	-.1104

OA163B MAIN GEAR DOOR OUTER SURFACE (RFPM01)

BETA (6) = .000 ALPHA (4) = 4.110 Q(PSF) = 43.418 PO = 2113.6 RUN NO = 6.0000

SECTION (1)MAIN LND GR DR-O DEPENDENT VARIABLE CP

Y/BML	.0380	.3100	.5820	.8530
X/CML				
.050	-.6034	-.5725	-.5546	-.5765
.230	-.0572	-.0801	-.1330	-.1190
.410	-.0582	-.0143	-.0243	-.0612
.590	-.0622	-.0413	-.0403	-.0373
.770	-.0751	-.0662	-.0652	-.0761
.950	-.1021	-.1041	-.0781	-.0732

BETA (6) = .000 ALPHA (5) = 6.200 Q(PSF) = 43.418 PO = 2113.6 RUN NO = 6.0000

SECTION (1)MAIN LND GR DR-O DEPENDENT VARIABLE CP

Y/BML	.0380	.3100	.5820	.8530
X/CML				
.050	-.5067	-.5206	-.4749	-.6032
.230	-.0342	-.0372	-.1148	-.0591
.410	-.0621	.0214	.0214	.0015
.590	-.0521	-.0034	.0095	.0174
.770	-.0601	-.0292	-.0203	-.0223
.950	-.0839	-.0690	-.0382	-.0362

BETA (6) = .000 ALPHA (6) = 8.280 Q(PSF) = 43.418 PO = 2113.6 RUN NO = 6.0000

SECTION (1)MAIN LND GR DR-O DEPENDENT VARIABLE CP

Y/BML	.0380	.3100	.5820	.8530
X/CML				
050	-.4206	-.4624	-.3829	-.5458
.230	-.0113	-.0123	-.1067	-.0401
.410	-.0620	.0571	.0641	.0571
.590	-.0391	.0353	.0551	.0730
.770	-.0401	.0065	.0184	.0283
.950	-.0610	-.0342	.0005	-.0034

OA163B MAIN GEAR DOOR OUTER SURFACE (RFPM01)

BETA (7) = 1.000 ALPHA (1) = -2.060 Q(PSF) = 43.823 PO = 2113.6 RUN NO = 7.0000

SECTION (1)MAIN LND GR DR-O DEPENDENT VARIABLE CP

Y/BML	.0380	.3100	.5820	.8530
X/CML				
.050	-.8801	-.7174	-.7749	-.4774
.230	-.1353	-.2206	-.1839	-.3019
.410	-.1402	-.1412	-.1650	-.2592
.590	-.1531	-.1630	-.1809	-.2106
.770	-.1640	-.1789	-.1948	-.2126
.950	-.1898	-.2077	-.1948	-.1779

BETA (7) = 1.000 ALPHA (2) = .000 Q(PSF) = 43.823 PO = 2113.6 RUN NO = 7.0000

SECTION (1)MAIN LND GR DR-O DEPENDENT VARIABLE CP

Y/BML	.0380	.3100	.5820	.8530
X/CML				
.050	-.7670	-.6720	-.6967	-.5511
.230	-.1044	-.1875	-.1826	-.2441
.410	-.1103	-.0965	-.1133	-.1945
.590	-.1232	-.1212	-.1331	-.1529
.770	-.1361	-.1401	-.1519	-.1678
.950	-.1609	-.1658	-.1549	-.1460

BETA (7) = 1.000 ALPHA (3) = 2.060 Q(PSF) = 43.823 PO = 2113.6 RUN NO = 7.0000

SECTION (1)MAIN LND GR DR-O DEPENDENT VARIABLE CP

Y/BML	.0380	.3100	.5820	.8530
X/CML				
.050	-.6850	-.6266	-.6266	-.5564
.230	-.0924	-.1330	-.1676	-.1735
.410	-.0964	-.0528	-.0667	-.1290
.590	-.0993	-.0815	-.0835	-.0914
.770	-.1132	-.1043	-.1062	-.1191
.950	-.1359	-.1359	-.1132	-.1043

OA163B MAIN GEAR DOOR OUTER SURFACE (RFPM01)

BETA (7) = 1.000 ALPHA (4) = 4.110 Q(PSF) = 43.823 PO = 2113.6 RUN NO = 7.0000

SECTION (1)MAIN LND GR DR-O DEPENDENT VARIABLE CP

Y/BML	.0380	.3100	.5820	.8530
X/CML				
.050	-.5934	-.5549	-.5509	-.5983
.230	-.0765	-.0745	-.1546	-.1180
.410	-.1052	-.0093	-.0231	-.0646
.590	-.0893	-.0370	-.0379	-.0379
.770	-.0953	-.0627	-.0627	-.0636
.950	-.1180	-.0982	-.0696	-.0706

BETA (7) = 1.000 ALPHA (5) = 6.190 Q(PSF) = 43.823 PO = 2113.6 RUN NO = 7.0000

SECTION (1)MAIN LND GR DR-O DEPENDENT VARIABLE CP

Y/BML	.0380	.3100	.5820	.8530
X/CML				
.050	-.5060	-.5218	-.4684	-.6106
.230	-.0507	-.0537	-.1337	-.0695
.410	-.1060	.0202	.0222	-.0043
.590	-.0784	-.0073	.0074	.0193
.770	-.0814	-.0330	-.0221	-.0132
.950	-.0991	-.0685	-.0369	-.0385

BETA (7) = 1.000 ALPHA (6) = 8.260 Q(PSF) = 43.823 PO = 2113.6 RUN NO = 7.0000

SECTION (1)MAIN LND GR DR-O DEPENDENT VARIABLE CP

Y/BML	.0380	.3100	.5820	.8530
X/CML				
.050	-.4206	-.4728	-.3791	-.5360
.230	-.0556	-.0339	-.1266	-.0625
.410	-.0882	.0488	.0577	.0478
.590	-.0645	.0291	.0547	.0686
.770	-.0615	.0015	.0202	.0370
.950	-.0823	-.0379	-.0043	-.0112

OA163B MAIN GEAR DOOR OUTER SURFACE (RFPM01)

BETA (8) = 1.980 ALPHA (1) = -2.070 Q(PSF) = 43.017 PO = 2113.6 RUN NO = 8.0000

SECTION (1)MAIN LND GR DR-O DEPENDENT VARIABLE CP

Y/BML	.0380	.3100	.5820	.8530
X/CML				
.050	-.8641	-.7233	-.7617	-.5726
.230	-.1422	-.2328	-.2112	-.2909
.410	-.1442	-.1353	-.1570	-.2574
.590	-.1550	-.1590	-.1767	-.2102
.770	-.1668	-.1757	-.1905	-.2052
.950	-.1905	-.2033	-.1875	-.1747

BETA (8) = 1.980 ALPHA (2) = -.010 Q(PSF) = 43.017 PO = 2113.6 RUN NO = 8.0000

SECTION (1)MAIN LND GR DR-O DEPENDENT VARIABLE CP

Y/BML	.0380	.3100	.5820	.8530
X/CML				
.050	-.7904	-.7012	-.7164	-.5714
.230	-.1282	-.1911	-.2053	-.2387
.410	-.1373	-.0967	-.1140	-.1992
.590	-.1414	-.1221	-.1343	-.1556
.770	-.1535	-.1424	-.1495	-.1627
.950	-.1789	-.1758	-.1535	-.1424

BETA (8) = 1.980 ALPHA (3) = 2.060 Q(PSF) = 43.017 PO = 2113.6 RUN NO = 8.0000

SECTION (1)MAIN LND GR DR-O DEPENDENT VARIABLE CP

Y/BML	.0380	.3100	.5820	.8530
X/CML				
.050	-.7077	-.6541	-.6540	-.5824
.230	-.1105	-.1398	-.1514	-.1792
.410	-.1388	-.0570	-.0681	-.1338
.590	-.1318	-.0853	-.0863	-.0954
.770	-.1368	-.1075	-.1065	-.1095
.950	-.1590	-.1408	-.1146	-.1065

OA163B MAIN GEAR DOOR OUTER SURFACE (RFPM01)

BETA (8) = 1.980 ALPHA (4) = 4.120 Q(PSF) = 43.017 PO = 2113.6 RUN NO = 8.0000

SECTION (1)MAIN LND GR DR-O DEPENDENT VARIABLE CP

Y/BML	.0380	.3100	.5820	.8530
X/CML				
.050	-.6203	-.6000	-.5616	-.6405
.230	-.0904	-.0965	-.1723	-.1228
.410	-.1480	-.0196	-.0216	-.0712
.590	-.1228	-.0479	-.0398	-.0398
.770	-.1197	-.0722	-.0641	-.0550
.950	-.1359	-.1096	-.0762	-.0762

BETA (8) = 1.980 ALPHA (5) = 6.180 Q(PSF) = 43.017 PO = 2113.6 RUN NO = 8.0000

SECTION (1)MAIN LND GR DR-O DEPENDENT VARIABLE CP

Y/BML	.0380	.3100	.5820	.8530
X/CML				
.050	-.5338	-.5480	-.4892	-.6353
.230	-.0957	-.0643	-.1596	-.0876
.410	-.1292	.0107	.0157	-.0095
.590	-.1059	-.0116	.0086	.0188
.770	-.1028	-.0490	-.0217	-.0065
.950	-.1211	-.0754	-.0410	-.0501

BETA (8) = 1.980 ALPHA (6) = 8.280 Q(PSF) = 43.017 PO = 2113.6 RUN NO = 8.0000

SECTION (1)MAIN LND GR DR-O DEPENDENT VARIABLE CP

Y/BML	.0380	.3100	.5820	.8530
X/CML				
.050	-.4754	-.4865	-.3884	-.5410
.230	-.1277	-.0691	-.1651	-.0994
.410	-.1287	.0399	.0531	.0359
.590	-.1035	.0227	.0541	.0662
.770	-.0913	-.0024	.0167	.0409
.950	-.1105	-.0428	-.0075	-.0196

OA163B MAIN GEAR DOOR OUTER SURFACE (RFPM01)

BETA (9) = 2.990 ALPHA (1) = -2.060 Q(PSF) = 42.788 PO = 2113.6 RUN NO = 9.0000

SECTION (1)MAIN LND GR DR-O DEPENDENT VARIABLE CP

Y/BML	.0380	.3100	.5820	.8530
X/CML				
.050	-.8657	-.7535	-.7748	-.6201
.230	-.1581	-.2430	-.2430	-.2976
.410	-.1672	-.1359	-.1571	-.2622
.590	-.1733	-.1601	-.1793	-.2107
.770	-.1874	-.1783	-.1905	-.2046
.950	-.2127	-.2076	-.1905	-.1793

BETA (9) = 2.990 ALPHA (2) = .000 Q(PSF) = 42.788 PO = 2113.6 RUN NO = 9.0000

SECTION (1)MAIN LND GR DR-O DEPENDENT VARIABLE CP

Y/BML	.0380	.3100	.5820	.8530
X/CML				
.050	-.7854	-.7065	-.7156	-.5406
.230	-.1410	-.1865	-.2149	-.2321
.410	-.1704	-.0995	-.1147	-.2007
.590	-.1653	-.1238	-.1309	-.1532
.770	-.1714	-.1420	-.1451	-.1572
.950	-.1946	-.1744	-.1501	-.1380

BETA (9) = 2.990 ALPHA (3) = 2.080 Q(PSF) = 42.788 PO = 2113.6 RUN NO = 9.0000

SECTION (1)MAIN LND GR DR-O DEPENDENT VARIABLE CP

Y/BML	.0380	.3100	.5820	.8530
X/CML				
.050	-.7211	-.6633	-.6420	-.5731
.230	-.1301	-.1393	-.1940	-.1768
.410	-.1910	-.0602	-.0683	-.1332
.590	-.1636	-.0876	-.0845	-.0957
.770	-.1595	-.1109	-.1068	-.0947
.950	-.1768	-.1443	-.1139	-.1089

OA163B MAIN GEAR DOOR OUTER SURFACE (RFPM01)

BETA (9) = 2.990 ALPHA (4) = 4.120 Q(PSF) = 42.788 PO = 2113.5 RUN NO = 9.0000

SECTION (1)MAIN LND GR DR-O DEPENDENT VARIABLE CP

Y/BML	.0380	.3100	.5820	.8530
X/CML				
.050	-.6271	-.6109	-.5604	-.6625
.230	-.1320	-.1037	-.1837	-.1239
.410	-.1766	-.0267	-.0247	-.0723
.590	-.1472	-.0520	-.0409	-.0399
.770	-.1401	-.0763	-.0642	-.0470
.950	-.1594	-.1128	-.0784	-.0854

BETA (9) = 2.990 ALPHA (5) = 6.200 Q(PSF) = 42.788 PO = 2113.6 RUN NO = 9.0000

SECTION (1)MAIN LND GR DR-O DEPENDENT VARIABLE CP

Y/BML	.0380	.3100	.5820	.8530
X/CML				
.050	-.5629	-.5609	-.4847	-.6340
.230	-.1669	-.0908	-.1771	-.1090
.410	-.1679	.0005	.0147	-.0187
.590	-.1405	-.0177	.0076	.0188
.770	-.1294	-.0420	-.0258	.0005
.950	-.1466	-.0796	-.0451	-.0573

BETA (9) = 2.980 ALPHA (6) = 8.260 Q(PSF) = 42.788 PO = 2113.6 RUN NO = 9.0000

SECTION (1)MAIN LND GR DR-O DEPENDENT VARIABLE CP

Y/BML	.0380	.3100	.5820	.8530
X/CML				
.050	-.5365	-.5061	-.3804	-.5152
.230	-.2183	-.1058	-.2112	-.1494
.410	-.1828	.0269	.0370	.0147
.590	-.1463	.0137	.0502	.0603
.770	-.1220	-.0085	.0117	.0410
.950	-.1362	-.0470	-.0115	-.0278

OA163B MAIN GEAR DOOR OUTER SURFACE (RFPM01)

BETA (10) = 4.050 ALPHA (1) = -2.060 Q(PSF) = 42.907 PO = 2113.7 RUN NO = 10.000

SECTION (1)MAIN LND GR DR-O DEPENDENT VARIABLE CP

Y/BML	.0380	.3100	.5820	.8530
X/CML				
.050	-.8421	-.7575	-.7767	-.5683
.230	-.1716	-.2289	-.2410	-.2904
.410	-.1987	-.1303	-.1565	-.2602
.590	-.1987	-.1595	-.1756	-.2098
.770	-.2069	-.1786	-.1867	-.1977
.950	-.2269	-.2058	-.1846	-.1736

BETA (10) = 4.040 ALPHA (2) = .000 Q(PSF) = 42.907 PO = 2113.7 RUN NO = 10.000

SECTION (1)MAIN LND GR DR-O DEPENDENT VARIABLE CP

Y/BML	.0380	.3100	.5820	.8530
X/CML				
.050	-.7910	-.7143	-.7264	-.5234
.230	-.1589	-.1821	-.2205	-.2266
.410	-.2215	-.0973	-.1135	-.1993
.590	-.1963	-.1256	-.1286	-.1539
.770	-.1912	-.1458	-.1458	-.1448
.950	-.2084	-.1761	-.1508	-.1418

BETA (10) = 4.040 ALPHA (3) = 2.050 Q(PSF) = 42.907 PO = 2113.7 RUN NO = 10.000

SECTION (1)MAIN LND GR DR-O DEPENDENT VARIABLE CP

Y/BML	.0380	.3100	.5820	.8530
X/CML				
.050	-.7104	-.6710	-.6518	-.5973
.230	-.1640	-.1378	-.2054	-.1771
.410	-.2175	-.0640	-.0671	-.1337
.590	-.1893	-.0923	-.0862	-.0953
.770	-.1751	-.1115	-.1075	-.0903
.950	-.1933	-.1479	-.1145	-.1206

OA163B MAIN GEAR DOOR OUTER SURFACE (RFPM01)

BETA (10) = 4.050 ALPHA (4) = 4.110 Q(PSF) = 42.907 PO = 2113.7 RUN NO = 10.000

SECTION (1)MAIN LND GR DR-O DEPENDENT VARIABLE CP

Y/BML	.0380	.3100	.5820	.8530
X/CML				
.050	-.6351	-.6220	-.5684	-.6836
.230	-.1995	-.1197	-.2005	-.1328
.410	-.2046	-.0327	-.0257	-.0742
.590	-.1752	-.0550	-.0388	-.0348
.770	-.1621	-.0782	-.0651	-.0398
.950	-.1823	-.1156	-.0802	-.0893

BETA (10) = 4.050 ALPHA (5) = 6.210 Q(PSF) = 42.907 PO = 2113.7 RUN NO = 10.000

SECTION (1)MAIN LND GR DR-O DEPENDENT VARIABLE CP

Y/BML	.0380	.3100	.5820	.8530
X/CML				
.050	-.6023	-.5598	-.4625	-.6185
.230	-.2649	-.1331	-.2274	-.1554
.410	-.2233	-.0085	.0015	-.0257
.590	-.1818	-.0237	.0086	.0167
.770	-.1554	-.0440	-.0267	.0036
.950	-.1747	-.0845	-.0480	-.0632

BETA (10) = 4.050 ALPHA (6) = 8.280 Q(PSF) = 42.907 PO = 2113.7 RUN NO = 10.000

SECTION (1)MAIN LND GR DR-O DEPENDENT VARIABLE CP

Y/BML	.0380	.3100	.5820	.8530
X/CML				
.050	-.5820	-.4881	-.3538	-.4538
.230	-.3296	-.1428	-.2549	-.2135
.410	-.2458	.0086	.0126	-.0166
.590	-.1922	.0056	.0439	.0530
.770	-.1539	-.0166	.0136	.0510
.950	-.1650	-.0509	-.0125	-.0216

DATE 27 APR 77 OA1638 PRESSURE DATA LISTING

OA1538 MAIN GEAR DOOR OUTER SURFACE (RFPM01)

BETA (11) = 5.010 ALPHA (1) = -2.070 Q(PSF) = 42.88 PO = 2113.6 RUN NO = 11.000

SECTION (1)MAIN LND GR DR-O DEPENDENT VARIABLE CP

Y/BML	.0380	.3100	.5820	.8530
X/CML				
.050	-.8545	-.7635	-.8039	-.4593
.230	-.1884	-.2238	-.2410	-.2814
.410	-.2470	-.1348	-.1621	-.2571
.590	-.2288	-.1621	-.1763	-.2096
.770	-.2228	-.1773	-.1844	-.1884
.950	-.2399	-.2066	-.1844	-.1753

BETA (11) = 5.010 ALPHA (2) = .010 Q(PSF) = 42.88 PO = 2113.6 RUN NO = 11.000

SECTION (1)MAIN LND GR DR-O DEPENDENT VARIABLE CP

Y/BML	.0380	.3100	.5820	.8530
X/CML				
.050	-.7842	-.7276	-.7307	-.4994
.230	-.1923	-.1761	-.2166	-.2186
.410	-.2539	-.0994	-.1135	-.1923
.590	-.2206	-.1267	-.1307	-.1469
.770	-.2065	-.1469	-.1469	-.1317
.950	-.2236	-.1772	-.1529	-.1529

BETA (11) = 5.010 ALPHA (3) = 2.050 Q(PSF) = 42.88 PO = 2113.6 RUN NO = 11.000

SECTION (1)MAIN LND GR DR-O DEPENDENT VARIABLE CP

Y/BML	.0380	.3100	.5820	.8530
X/CML				
.050	-.7116	-.6844	-.6420	-.6914
.230	-.2324	-.1547	-.2294	-.1729
.410	-.2425	-.0680	-.0660	-.1305
.590	-.2112	-.0952	-.0811	-.0872
.770	-.1981	-.1144	-.1053	-.0831
.950	-.2183	-.1467	-.1164	-.1245

OA163B MAIN GEAR DOOR OUTER SURFACE (RFPM01)

BETA (11) = 5.010 ALPHA (4) = 4.130 Q(PSF) = 42.887 PO = 2113.6 RUN NO = 11.000

SECTION (1)MAIN LND GR DR-O DEPENDENT VARIABLE CP

Y/BML	.0380	.3100	.5820	.8530
X/CML				
.050	-.6618	-.6294	-.5526	-.7103
.230	-.2957	-.1592	-.2401	-.1662
.410	-.2573	-.0398	-.0297	-.0793
.590	-.2128	-.0601	-.0368	-.0317
.770	-.1915	-.0833	-.0641	-.0358
.950	-.2057	-.1197	-.0843	-.0955

BETA (11) = 5.010 ALPHA (5) = 6.180 Q(PSF) = 42.887 PO = 2113.6 RUN NO = 11.000

SECTION (1)MAIN LND GR DR-O DEPENDENT VARIABLE CP

Y/BML	.0380	.3100	.5820	.8530
X/CML				
.050	-.6428	-.5750	-.4314	-.5831
.230	-.3788	-.1663	-.2776	-.2230
.410	-.2867	-.0227	-.0156	-.0429
.590	-.2290	-.0338	.0056	.0106
.770	-.1936	-.0510	-.0287	.0035
.950	-.2048	-.0904	-.0510	-.0651

BETA (11) = 5.010 ALPHA (6) = 8.250 Q(PSF) = 42.887 PO = 2113.6 RUN NO = 11.000

SECTION (1)MAIN LND GR DR-O DEPENDENT VARIABLE CP

Y/BML	.0380	.3100	.5820	.8530
X/CML				
.050	-.5493	-.5412	-.4118	-.4877
.230	-.4503	-.1025	-.2208	-.1935
.410	-.2966	-.0044	.0116	-.0176
.590	-.2238	-.0065	.0359	.0460
.770	-.1905	-.0237	.0025	.0430
.950	-.1985	-.0590	-.0206	-.0277

OA163B MAIN GEAR DOOR OUTER SURFACE (RFPM02) (27 APR 77)

REFERENCE DATA

SREF =	2690.0000 SQ.FT.	XMRP =	1076.7000 IN. XO		
LREF =	474.8100 INCHES	YMRP =	.0000 IN. YO		
BREF =	936.6800 INCHES	ZMRP =	375.0000 IN. ZO		
SCALE =	.0405				

PARAMETRIC DATA

SPDBRK =	25.000	BDFLAP =	.000
ELV-L =	.000	ELV-R =	.000
PHI-N =	30.800	THETAN =	5.000
PHI-ML =	36.000	THETML =	5.600
PHI-MR =	36.000	THETMR =	5.600

BETA (1) = -5.050 ALPHA (1) = -2.070 Q(PSF) = 42.822 PO = 2113.6 RUN NO = 12.000

SECTION (1)MAIN LND GR DR-O DEPENDENT VARIABLE CP

Y/BML	.0380	.3100	.5820	.8530
X/CML				
.050	-.7844	-.7733	-.9554	-.2472
.230	-.1815	-.1461	-.2007	-.2867
.410	-.2078	-.1815	-.2047	-.2513
.590	-.1977	-.1936	-.2058	-.2027
.770	-.2108	-.2088	-.2250	-.2675
.950	-.2311	-.2412	-.2270	-.2260

BETA (1) = -5.050 ALPHA (2) = -.010 Q(PSF) = 42.822 PO = 2113.6 RUN NO = 12.000

SECTION (1)MAIN LND GR DR-O DEPENDENT VARIABLE CP

Y/BML	.0380	.3100	.5820	.8530
X/CML				
.050	-.7421	-.6815	-.8118	-.1692
.230	-.1237	-.1035	-.1257	-.2227
.410	-.1500	-.1287	-.1429	-.1833
.590	-.1530	-.1449	-.1489	-.1429
.770	-.1580	-.1631	-.1772	-.2166
.950	-.1671	-.1974	-.1813	-.1813

BETA (1) = -5.050 ALPHA (3) = 2.060 Q(PSF) = 42.822 PO = 2113.6 RUN NO = 12.000

SECTION (1)MAIN LND GR DR-O DEPENDENT VARIABLE CP

Y/BML	.0380	.3100	.5820	.8530
X/CML				
.050	-.7181	-.5984	-.6877	-.0948
.230	-.0725	-.0623	-.0522	-.1608
.410	-.1029	-.0796	-.0847	-.1222
.590	-.1070	-.0979	-.0968	-.0887
.770	-.1243	-.1202	-.1273	-.1659
.950	-.1486	-.1557	-.1375	-.1334

OA163B MAIN GEAR DOOR OUTER SURFACE (RFPM02)

BETA (1) = -5.050 ALPHA (4) = 4.120 Q(PSF) = 42.822 PO = 2113.6 RUN NO = 12.000

SECTION (1)MAIN LND GR DR-O DEPENDENT VARIABLE CP

Y/BML	.0380	.3100	.5820	.8530
X/CML				
.050	-.6530	-.5243	-.5709	-.1494
.230	-.0288	-.0207	.0076	-.0926
.410	-.0541	-.0278	-.0257	-.0521
.590	-.0612	-.0501	-.0450	-.0318
.770	-.0774	-.0754	-.0794	-.1149
.950	-.1038	-.1119	-.0926	-.0876

BETA (1) = -5.050 ALPHA (5) = 6.220 Q(PSF) = 42.822 PO = 2113.6 RUN NO = 12.000

SECTION (1)MAIN LND GR DR-O DEPENDENT VARIABLE CP

Y/BML	.0380	.3100	.5820	.8530
X/CML				
.050	-.5353	-.4576	-.4748	-.3335
.230	.0086	.0177	.0257	-.0408
.410	-.0034	.0207	.0308	.0167
.590	-.0125	-.0004	.0096	.0257
.770	-.0327	-.0307	-.0307	-.0640
.950	-.0569	-.0670	-.0488	-.0499

BETA (1) = -5.950 ALPHA (6) = 8.270 Q(PSF) = 42.822 PO = 2113.6 RUN NO = 12.000

SECTION (1)MAIN LND GR DR-O DEPENDENT VARIABLE CP

Y/BML	.0380	.3100	.5820	.8530
X/CML				
.050	-.3933	-.4054	-.3882	-.4318
.230	.0461	.0653	.0410	.0218
.410	.0420	.0765	.0815	.0835
.590	.0329	.0471	.0592	.0835
.770	.0106	.0167	.0187	-.0045
.950	-.0166	-.0227	-.0014	-.0024

OA163B MAIN GEAR DOOR OUTER SURFACE (RFPM02)

BETA (2) = -4.040 ALPHA (1) = -2.030 Q(PSF) = 42.870 PO = 2113.6 RUN NO = 13.000

SECTION (1)MAIN LND GR DR-O DEPENDENT VARIABLE CP

Y/BML	.0380	.3100	.5820	.8530
X/CML				
.050	-.7900	-.7415	-.9194	-.2481
.230	-.1591	-.1460	-.1885	-.2905
.410	-.1874	-.1723	-.1986	-.2612
.590	-.1885	-.1885	-.1996	-.2077
.770	-.2006	-.2046	-.2198	-.2562
.950	-.2238	-.2360	-.2208	-.2137

BETA (2) = -4.040 ALPHA (2) = .020 Q(PSF) = 42.870 PO = 2113.6 RUN NO = 13.000

SECTION (1)MAIN LND GR DR-O DEPENDENT VARIABLE CP

Y/BML	.0380	.3100	.5820	.8530
X/CML				
.050	-.7763	-.6560	-.7783	-.1610
.230	-.1055	-.1156	-.1105	-.2176
.410	-.1378	-.1247	-.1408	-.1994
.590	-.1428	-.1418	-.1459	-.1479
.770	-.1570	-.1600	-.1701	-.2075
.950	-.1812	-.1934	-.1762	-.1711

BETA (2) = -4.040 ALPHA (3) = 2.060 Q(PSF) = 42.870 PO = 2113.6 RUN NO = 13.000

SECTION (1)MAIN LND GR DR-O DEPENDENT VARIABLE CP

Y/BML	.0380	.3100	.5820	.8530
X/CML				
.050	-.7391	-.5913	-.6672	-.1572
.230	-.0692	-.0753	-.0490	-.1583
.410	-.0935	-.0783	-.0834	-.1279
.590	-.1026	-.0975	-.0986	-.0945
.770	-.1188	-.1198	-.1209	-.1613
.950	-.1441	-.1542	-.1360	-.1299

OA163B MAIN GEAR DOOR OUTER SURFACE (RFPM02)

BETA (2) = -4.040 ALPHA (4) = 4.140 Q(PSF) = 42.870 PO = 2113.6 RUN NO = 13.000

SECTION (1)MAIN LND GR DR-O DEPENDENT VARIABLE CP

Y/BML	.0380	.3100	.5820	.8530
X/CML				
.050	-.6452	-.5269	-.5663	-.3046
.230	-.0307	-.0358	-.0115	-.0994
.410	-.0459	-.0267	-.0257	-.0580
.590	-.0550	-.0479	-.0449	-.0327
.770	-.0732	-.0742	-.0782	-.1106
.950	-.0994	-.1095	-.0924	-.0893

BETA (2) = -4.040 ALPHA (5) = 6.220 Q(PSF) = 42.870 PO = 2113.6 RUN NO = 13.000

SECTION (1)MAIN LND GR DR-O DEPENDENT VARIABLE CP

Y/BML	.0380	.3100	.5820	.8530
X/CML				
.050	-.5212	-.4767	-.4767	-.4383
.230	.0035	.0025	-.0085	-.0449
.410	-.0004	.0278	.0278	.0147
.590	-.0095	-.0004	.0076	.0278
.770	-.0267	-.0297	-.0297	-.0601
.950	-.0570	-.0671	-.0449	-.0449

BETA (2) = -4.050 ALPHA (6) = 8.270 Q(PSF) = 42.870 PO = 2113.6 RUN NO = 13.000

SECTION (1)MAIN LND GR DR-O DEPENDENT VARIABLE CP

Y/BML	.0380	.3100	.5820	.8530
X/CML				
.050	-.3804	-.4168	-.3905	-.5006
.230	.0419	.0581	.0056	.0227
.410	.0440	.0743	.0783	.0803
.590	.0298	.0450	.0581	.0803
.770	.0136	.0167	.0197	.0015
.950	-.0135	-.0257	-.0034	.0005

OA163B MAIN GEAR DOOR OUTER SURFACE (RFPM02)

BETA (3) = -2.970 ALPHA (1) = -2.060 Q(PSF) = 42.632 PO = 2113.6 RUN NO = 14.000

SECTION (1)MAIN LND GR DR-O DEPENDENT VARIABLE CP

Y/BML	.0380	.3100	.5820	.8530
X/CML				
.050	-.8336	-.7323	-.8833	-.2447
.230	-.1443	-.1636	-.1737	-.2792
.410	-.1737	-.1687	-.1991	-.2761
.590	-.1818	-.1879	-.2001	-.2163
.770	-.1940	-.2041	-.2183	-.2467
.950	-.2163	-.2346	-.2183	-.2092

BETA (3) = -2.970 ALPHA (2) = .010 Q(PSF) = 42.632 PO = 2113.6 RUN NO = 14.000

SECTION (1)MAIN LND GR DR-O DEPENDENT VARIABLE CP

Y/BML	.0380	.3100	.5820	.8530
X/CML				
.050	-.8103	-.6588	-.7517	-.2372
.230	-.1014	-.1246	-.1024	-.2145
.410	-.1276	-.1216	-.1367	-.2024
.590	-.1357	-.1398	-.1468	-.1529
.770	-.1519	-.1599	-.1690	-.2003
.950	-.1771	-.1913	-.1751	-.1650

BETA (3) = -2.970 ALPHA (3) = 2.070 Q(PSF) = 42.632 PO = 2113.6 RUN NO = 14.000

SECTION (1)MAIN LND GR DR-O DEPENDENT VARIABLE CP

Y/BML	.0380	.3100	.5820	.8530
X/CML				
.050	-.7415	-.5907	-.6463	-.2829
.230	-.0652	-.0905	-.0541	-.1604
.410	-.0854	-.0713	-.0773	-.1300
.590	-.0935	-.0925	-.0956	-.0956
.770	-.1087	-.1148	-.1229	-.1492
.950	-.1351	-.1472	-.1290	-.1219

OA163B MAIN GEAR DOOR OUTER SURFACE (RFPM02)

BETA (3) = -2.970 ALPHA (4) = 4.130 Q(PSF) = 42.632 PO = 2113.6 RUN NO = 14.000

SECTION (1)MAIN LND GR DR-O DEPENDENT VARIABLE CP

Y/BML	.0380	.3100	.5820	.8530
X/CML				
.050	-.6400	-.5378	-.5601	-.4315
.230	-.0348	-.0530	-.0500	-.1097
.410	-.0409	-.0227	-.0237	-.0561
.590	-.0500	-.0470	-.0439	-.0328
.770	-.0672	-.0723	-.0773	-.1067
.950	-.0925	-.1097	-.0915	-.0864

BETA (3) = -2.970 ALPHA (5) = 6.200 Q(PSF) = 42.832 PO = 2113.6 RUN NO = 14.000

SECTION (1)MAIN LND GR DR-O DEPENDENT VARIABLE CP

Y/BML	.0380	.3100	.5820	.8530
X/CML				
.050	-.5113	-.4870	-.4739	-.5154
.230	.0015	-.0065	-.0419	-.0490
.410	.0035	.0298	.0268	.0116
.590	-.0095	-.0004	.0086	.0248
.770	-.0247	-.0287	-.0247	-.0490
.950	-.0540	-.0662	-.0449	-.0409

BETA (3) = -2.970 ALPHA (6) = 8.280 Q(PSF) = 42.832 PO = 2113.6 RUN NO = 14.000

SECTION (1)MAIN LND GR DR-O DEPENDENT VARIABLE CP

Y/BML	.0380	.3100	.5820	.8530
X/CML				
.050	-.3908	-.4343	-.3898	-.5455
.230	.0359	.0430	-.0206	.0177
.410	.0410	.0733	.0764	.0693
.590	.0319	.0460	.0561	.0784
.770	.0126	.0157	.0228	.0106
.950	-.0176	-.0267	.0005	.0025

OA163B MAIN GEAR DOOR OUTER SURFACE (RFPM02)

BETA (4) = -2.040 ALPHA (1) = -2.060 Q(PSF) = 42.832 PO = 2113.6 RUN NO = 15.000

SECTION (1)MAIN LND GR DR-O DEPENDENT VARIABLE CP

Y/BML	.0380	.3100	.5820	.8530
X/CML				
.050	-.8721	-.7154	-.8347	-.2451
.230	-.1319	-.1693	-.1571	-.2734
.410	-.1612	-.1612	-.1845	-.2654
.590	-.1703	-.1794	-.1936	-.2107
.770	-.1855	-.1966	-.2118	-.2350
.950	-.2087	-.2269	-.2118	-.1976

BETA (4) = -2.030 ALPHA (2) = .010 Q(PSF) = 42.832 PO = 2113.6 RUN NO = 15.000

SECTION (1)MAIN LND GR DR-O DEPENDENT VARIABLE CP

Y/BML	.0380	.3100	.5820	.8530
X/CML				
.050	-.8200	-.6539	-.7390	-.2679
.230	-.1007	-.1402	-.1037	-.2192
.410	-.1189	-.1159	-.1291	-.2000
.590	-.1281	-.1352	-.1453	-.1554
.770	-.1433	-.1534	-.1676	-.1909
.950	-.1686	-.1848	-.1706	-.1574

BETA (4) = -2.040 ALPHA (3) = 2.080 Q(PSF) = 42.832 PO = 2113.6 RUN NO = 15.000

SECTION (1)MAIN LND GR DR-O DEPENDENT VARIABLE CP

Y/BML	.0380	.3100	.5820	.8530
X/CML				
.050	-.7456	-.6008	-.6424	-.4135
.230	-.0713	-.1087	-.0804	-.1705
.410	-.0794	-.0703	-.0753	-.1351
.590	-.0915	-.0925	-.0956	-.0986
.770	-.1057	-.1148	-.1219	-.1422
.950	-.1330	-.1482	-.1300	-.1189

OA163B MAIN GEAR DOOR OUTER SURFACE (RFPM02)

BETA (4) = -2.040 ALPHA (4) = 4.120 Q(PSF) = 42.852 PO = 2113.6 RUN NO = 15.000

SECTION (1)MAIN LND GR DR-O DEPENDENT VARIABLE CP

Y/BML	.0380	.3100	.5820	.8530
X/CML				
.050	-.6315	-.5478	-.5499	-.5226
.230	-.0377	-.0649	-.0881	-.1133
.410	-.0377	-.0175	-.0196	-.0589
.590	-.0468	-.0458	-.0427	-.0347
.770	-.0629	-.0700	-.0730	-.0962
.950	-.0911	-.1053	-.0851	-.0821

BETA (4) = -2.040 ALPHA (5) = 6.200 Q(PSF) = 42.852 PO = 2113.6 RUN NO = 15.000

SECTION (1)MAIN LND GR DR-O DEPENDENT VARIABLE CP

Y/BML	.0380	.3100	.5820	.8530
X/CML				
.050	-.5058	-.4977	-.4744	-.5735
.230	-.0065	-.0176	-.0722	-.0489
.410	-.0004	.0288	.0278	.0035
.590	-.0075	.0015	.0096	.0207
.770	-.0257	-.0287	-.0226	-.0378
.950	-.0519	-.0651	-.0418	-.0388

BETA (4) = -2.040 ALPHA (6) = 8.290 Q(PSF) = 42.852 PO = 2113.6 RUN NO = 15.000

SECTION (1)MAIN LND GR DR-O DEPENDENT VARIABLE CP

Y/BML	.0380	.3100	.5820	.8530
X/CML				
.050	-.3972	-.4428	-.3901	-.5521
.230	.0228	.0228	-.0530	.0056
.410	.0248	.0714	.0754	.0633
.590	.0218	.0451	.0602	.0785
.770	.0025	.0147	.0248	.0208
.950	-.0247	-.0267	.0005	.0066

OA163B MAIN GEAR DOOR OUTER SURFACE (RFPM02)

BETA (5) = -1.030 ALPHA (1) = -2.040 Q(PSF) = 42.857 PO = 2113.7 RUN NO = 16.000

SECTION (1)MAIN LND GR DR-O DEPENDENT VARIABLE CF

Y/BML	.0380	.3100	.5820	.8530
X/CML				
.050	-.8882	-.7169	-.8187	-.2795
.230	-.1375	-.1878	-.1556	-.2826
.410	-.1536	-.1556	-.1808	-.2674
.590	-.1647	-.1778	-.1949	-.2181
.770	-.1778	-.1939	-.2100	-.2281
.950	-.2009	-.2231	-.2090	-.1919

BETA (5) = -1.040 ALPHA (2) = .020 Q(PSF) = 42.857 PO = 2113.7 RUN NO = 16.000

SECTION (1)MAIN LND GR DR-O DEPENDENT VARIABLE CF

Y/BML	.0380	.3100	.5820	.8530
X/CML				
.050	-.8218	-.6620	-.7156	-.3848
.230	-.1036	-.1572	-.1228	-.2250
.410	-.1147	-.1127	-.1248	-.1967
.590	-.1279	-.1319	-.1440	-.1592
.770	-.1420	-.1521	-.1663	-.1815
.950	-.1653	-.1825	-.1693	-.1491

BETA (5) = -1.040 ALPHA (3) = 2.060 Q(PSF) = 42.857 PO = 2113.7 RUN NO = 16.000

SECTION (1)MAIN LND GR DR-O DEPENDENT VARIABLE CF

Y/BML	.0380	.3100	.5820	.8530
X/CML				
.050	-.7389	-.6102	-.6416	-.5180
.230	-.0733	-.1240	-.1199	-.1807
.410	-.0754	-.0642	-.0713	-.1372
.590	-.0865	-.0895	-.0916	-.0987
.770	-.0997	-.1118	-.1169	-.1392
.950	-.1250	-.1453	-.1250	-.1230

OA1638 MAIN GEAR DOOR OUTER SURFACE (RFPM02)

BETA (5) = -1.030 ALPHA (4) = 4.120 Q(PSF) = 42.857 PO = 2113.7 RUN NO = 16.000

SECTION (1)MAIN LND GR DR-O DEPENDENT VARIABLE CF

Y/BML	.0380	.3100	.5820	.8530
X/CML				
.050	-.6102	-.5617	-.5547	-.5870
.230	-.0468	-.0751	-.1145	-.1165
.410	-.0418	-.0135	-.0216	-.0610
.590	-.0479	-.0398	-.0408	-.0357
.770	-.0610	-.0691	-.0691	-.0862
.950	-.0903	-.1024	-.0842	-.0741

BETA (5) = -1.040 ALPHA (5) = 6.200 Q(PSF) = 42.857 PO = 2113.7 RUN NO = 16.000

SECTION (1)MAIN LND GR DR-O DEPENDENT VARIABLE CF

Y/BML	.0380	.3100	.5820	.8530
X/CML				
.050	-.5109	-.5170	-.4825	-.6152
.230	-.0186	-.0318	-.0976	-.0591
.410	-.0207	.0258	.0228	-.0014
.590	-.0217	-.0014	.0076	.0177
.770	-.0399	-.0277	-.0227	-.0298
.950	-.0693	-.0673	-.0389	-.0379

BETA (5) = -1.040 ALPHA (6) = 8.270 Q(PSF) = 42.897 PO = 2113.7 RUN NO = 16.000

SECTION (1)MAIN LND GR DR-O DEPENDENT VARIABLE CP

Y/BML	.0380	.3100	.5820	.8530
X/CML				
.050	-.4284	-.4516	-.3831	-.5513
.230	.0055	-.0044	-.0941	-.0195
.410	-.0296	.0630	.0720	.0529
.590	-.0175	.0418	.0589	.0750
.770	-.0236	.0086	.0237	.0277
.950	-.0487	-.0306	-.0024	.0025

OA163B MAIN GEAR DOOR OUTER SURFACE (RFPM02)

BETA (6) = .000 ALPHA (1) = -2.060 Q(PSF) = 42.860 PO = 2113.7 RUN NO = 17.000

SECTION (1)MAIN LND GR DR-O DEPENDENT VARIABLE CP

Y/BML	.0380	.3100	.5820	.8530
X/CML				
.050	-.9001	-.7167	-.7984	-.3681
.230	-.1364	-.2079	-.1636	-.2936
.410	-.1485	-.1505	-.1737	-.2674
.590	-.1606	-.1717	-.1908	-.2180
.770	-.1727	-.1888	-.2079	-.2231
.950	-.1979	-.2160	-.2039	-.1858

BETA (8) = -.010 ALPHA (2) = .020 Q(PSF) = 42.880 PO = 2113.7 RUN NO = 17.000

SECTION (1)MAIN LND GR DR-O DEPENDENT VARIABLE CP

Y/BML	.0380	.3100	.5820	.8530
X/CML				
.050	-.8224	-.6689	-.7113	-.5033
.230	-.1064	-.1741	-.1488	-.2438
.410	-.1105	-.1064	-.1206	-.2044
.590	-.1226	-.1297	-.1428	-.1579
.770	-.1367	-.1488	-.1620	-.1741
.950	-.1620	-.1781	-.1630	-.1519

BETA (6) = -.010 ALPHA (3) = 2.060 Q(PSF) = 42.860 PO = 2113.7 RUN NO = 17.000

SECTION (1)MAIN LND GR DR-O DEPENDENT VARIABLE CP

Y/BML	.0380	.3100	.5820	.8530
X/CML				
.050	-.7288	-.6285	-.6356	-.5920
.230	-.0825	-.1372	-.1544	-.1848
.410	-.0804	-.0581	-.0713	-.1351
.590	-.0875	-.0855	-.0906	-.0987
.770	-.1027	-.1078	-.1129	-.1280
.950	-.1311	-.1432	-.1240	-.1159

OA163B MAIN GEAR DOOR OUTER SURFACE (RFPM02)

BETA (6) = -.010 ALPHA (4) = 4.140 Q(PSF) = 42.860 PO = 2113.7 RUN NO = 17.000

SECTION (1)MAIN LND GR DR-O DEPENDENT VARIABLE CP

Y/BML	.0380	.3100	.5820	.8530
X/CML				
.050	-.6324	-.5877	-.5663	-.6486
.230	-.0614	-.0898	-.1498	-.1233
.410	-.0654	-.0167	-.0258	-.0685
.590	-.0675	-.0431	-.0421	-.0390
.770	-.0847	-.0695	-.0685	-.0746
.950	-.1111	-.1081	-.0837	-.0766

BETA (6) = -.010 ALPHA (5) = 6.200 Q(PSF) = 42.860 PO = 2113.7 RUN NO = 17.000

SECTION (1)MAIN LND GR DR-O DEPENDENT VARIABLE CP

Y/BML	.0380	.3100	.5820	.8530
X/CML				
.050	-.5231	-.5231	-.4767	-.6331
.230	-.0347	-.0509	-.1296	-.0670
.410	-.0680	.0237	.0247	-.0085
.590	-.0559	-.0024	.0076	.0177
.770	-.0620	-.0297	-.0216	-.0155
.950	-.0852	-.0700	-.0408	-.0357

BETA (6) = -.010 ALPHA (6) = 8.270 Q(PSF) = 42.860 PO = 2113.7 RUN NO = 17.000

SECTION (1)MAIN LND GR DR-O DEPENDENT VARIABLE CP

Y/BML	.0380	.3100	.5820	.8530
X/CML				
.050	-.4618	-.4598	-.3809	-.5448
.230	-.0206	-.0368	-.1319	-.0530
.410	-.0712	.0582	.0653	.0430
.590	-.0449	.0349	.0582	.0744
.770	-.0459	.0076	.0228	.0400
.950	-.0682	-.0338	-.0004	-.0044

DATE 27 APR 77 OA163B PRESSURE DATA LISTING (RFPM02)

OA163B MAIN GEAR DOOR OUTER SURFACE

BETA (7) = .980 ALPHA (1) = -2.070 Q(PSF) = 42.917 PO = 2113.7 RUN NO = 18.000

SECTION (1)MAIN LND GR DR-O DEPENDENT VARIABLE CP

Y/BML	.0380	.3100	.5820	.8530
X/CML				
.050	-.9050	-.7257	-.7851	-.4930
.230	-.1384	-.2321	-.1868	-.3046
.410	-.1445	-.1475	-.1686	-.2674
.590	-.1565	-.1676	-.1868	-.2190
.770	-.1696	-.1858	-.2019	-.2170
.950	-.1938	-.2140	-.2019	-.1807

BETA (7) = .980 ALPHA (2) = .020 Q(PSF) = 42.917 PO = 2113.7 RUN NO = 18.000

SECTION (1)MAIN LND GR DR-O DEPENDENT VARIABLE CP

Y/BML	.0380	.3100	.5820	.8530
X/CML				
.050	-.8150	-.6827	-.7039	-.6121
.230	-.1155	-.1861	-.1861	-.2477
.410	-.1165	-.1003	-.1165	-.2053
.590	-.1225	-.1246	-.1387	-.1589
.770	-.1387	-.1457	-.1589	-.1680
.950	-.1649	-.1780	-.1619	-.1508

BETA (7) = .980 ALPHA (3) = 2.060 Q(PSF) = 42.917 PO = 2113.7 RUN NO = 18.000

SECTION (1)MAIN LND GR DR-O DEPENDENT VARIABLE CP

Y/BML	.0380	.3100	.5820	.8530
X/CML				
.050	-.7323	-.6422	-.6392	-.6402
.230	-.0966	-.1452	-.1847	-.1806
.410	-.1037	-.0581	-.0723	-.1391
.590	-.1077	-.0875	-.0895	-.1006
.770	-.1219	-.1097	-.1128	-.1219
.950	-.1482	-.1462	-.1229	-.1128

OA163B MAIN GEAR DOOR OUTER SURFACE (RFPM02)

BETA (7) = .980 ALPHA (4) = 4.120 Q(PSF) = 42.317 PO = 2113.7 RUN NO = 18.000

SECTION (1)MAIN LND GR DR-O DEPENDENT VARIABLE CP

Y/BML	.0380	.3100	.5820	.8530
X/CML				
.050	-.6371	-.5906	-.5643	-.6533
.230	-.0752	-.1015	-.1672	-.1277
.410	-.1146	-.0176	-.0236	-.0752
.590	-.1005	-.0459	-.0408	-.0408
.770	-.1045	-.0711	-.0641	-.0600
.950	-.1257	-.1075	-.0823	-.0762

BETA (7) = .980 ALPHA (5) = 6.200 Q(PSF) = 42.317 PO = 2113.7 RUN NO = 18.000

SECTION (1)MAIN LND GR DR-O DEPENDENT VARIABLE CP

Y/BML	.0380	.3100	5820	.8530
X/CML				
.050	-.5536	-.5334	-.4787	-.6456
.230	-.0580	-.0752	-.1572	-.0833
.410	-.1137	.0207	.0228	-.0206
.590	-.0874	-.0055	.0096	.0177
.770	-.0833	-.0348	-.0226	-.0055
.950	-.1046	-.0742	-.0417	-.0439

BETA (7) = .980 ALPHA (6) = 8.270 Q(PSF) = 42.317 PO = 2113.7 RUN NO = 18.000

SECTION (1)MAIN LND GR DR-O DEPENDENT VARIABLE CP

Y/BML	.0380	.3100	.5820	.8530
X/CML				
.050	-.4923	-.4651	-.3784	-.5316
.230	-.0740	-.0730	-.1627	-.0901
.410	-.0972	.0479	.0549	.0247
.590	-.0720	.0318	.0600	.0690
.770	-.0710	.0035	.0217	.0459
.950	-.0921	-.0367	-.0024	-.0105

OA163B MAIN GEAR DOOR OUTER SURFACE (RFPM02)

BETA (8) = 1.970 ALPHA (1) = -2.060 Q(PSF) = 42.322 PO = 2113.7 RUN NO = 19.000

SECTION (1)MAIN LND GR DR-O DEPENDENT VARIABLE CP

Y/BML	.0380	.3100	.5820	.8530
X/CML				
.050	-.9005	-.7334	-.7759	-.6109
.230	-.1472	-.2424	-.2171	-.3021
.410	-.1482	-.1401	-.1644	-.2687
.590	-.1594	-.1634	-.1826	-.2171
.770	-.1725	-.1816	-.1978	-.2110
.950	-.1999	-.2120	-.1978	-.1786

BETA (8) = 1.970 ALPHA (2) = .010 Q(PSF) = 42.822 PO = 2113.7 RUN NO = 19.000

SECTION (1)MAIN LND GR DR-O DEPENDENT VARIABLE CP

Y/BML	.0380	.3100	.5820	.8530
X/CML				
.050	-.8067	-.6904	-.6995	-.6347
.230	-.1269	-.1967	-.2139	-.2392
.410	-.1339	-.0935	-.1127	-.2058
.590	-.1400	-.1218	-.1339	-.1562
.770	-.1532	-.1431	-.1511	-.1592
.950	-.1774	-.1744	-.1552	-.1441

BETA (8) = 1.970 ALPHA (3) = 2.070 Q(PSF) = 42.822 PO = 2113.7 RUN NO = 19.000

SECTION (1)MAIN LND GR DR-O DEPENDENT VARIABLE CP

Y/BML	.0380	.3100	.5820	.8530
X/CML				
.050	-.7312	-.6471	-.6349	-.6430
.230	-.1109	-.1464	-.1970	-.1839
.410	-.1484	-.0561	-.0693	-.1403
.590	-.1372	-.0845	-.0866	-.0947
.770	-.1403	-.1078	-.1068	-.1028
.950	-.1616	-.1433	-.1170	-.1078

OA163B MAIN GEAR DOOR OUTER SURFACE (RFPM02)

BETA (8) = 1.970 ALPHA (4) = 4.130 Q(PSF) = 42.822 PO = 2113.7 RUN NO = 19.000

SECTION (1)MAIN LND GR DR-O DEPENDENT VARIABLE CP

Y/BML	.0380	.3100	.5820	.8530
X/CML				
.050	-.6507	-.5971	-.5556	-.6962
.230	-.0975	-.1218	-.1905	-.1299
.410	-.1572	-.0206	-.0206	-.0793
.590	-.1278	-.0479	-.0358	-.0398
.770	-.1228	-.0722	-.0631	-.0449
.950	-.1450	-.1086	-.0793	-.0823

BETA (8) = 1.970 ALPHA (5) = 6.200 Q(PSF) = 42.822 PO = 2113.7 RUN NO = 19.000

SECTION (1)MAIN LND GR DR-O DEPENDENT VARIABLE CP

Y/BML	.0380	.3100	.5820	.8530
X/CML				
.050	-.5787	-.5402	-.4765	-.6423
.230	-.1116	-.1015	-.1884	-.1015
.410	-.1419	.0106	.0147	-.0247
.590	-.1146	-.0115	.0106	.0177
.770	-.1076	-.0368	-.0206	.0066
.950	-.1278	-.0772	-.0408	-.0479

BETA (8) = 1.970 ALPHA (6) = 8.270 Q(PSF) = 42.822 PO = 2113.7 RUN NO = 19.000

SECTION (1)MAIN LND GR DR-O DEPENDENT VARIABLE CP

Y/BML	.0380	.3100	.5820	.8530
X/CML				
.050	-.5482	-.4742	-.3629	-.5077
.230	-.1533	-.1087	-.2070	-.1533
.410	-.1533	.0339	.0380	.0086
.590	-.1189	.0228	.0542	.0633
.770	-.1017	-.0045	.0218	.0471
.950	-.1189	-.0450	-.0055	-.0186

OA163B MAIN GEAR DOOR OUTER SURFACE (RFPM02)

BETA (9) = 2.990 ALPHA (1) = -2.060 Q(PSF) = 42.623 PO = 2120.5 RUN NO = 20.000

SECTION (1)MAIN LND GR DR-O DEPENDENT VARIABLE CP

Y/BML	.0380	.3100	.5820	.8530
X/CML				
.050	-.8807	-.7404	-.7596	-.6839
.230	-.1559	-.2427	-.2508	-.2982
.410	-.1680	-.1327	-.1559	-.2659
.590	-.1720	-.1579	-.1771	-.2124
.770	-.1872	-.1781	-.1912	-.2033
.950	-.2114	-.2074	-.1912	-.1781

BETA (9) = 2.990 ALPHA (2) = -.020 Q(PSF) = 42.623 PO = 2120.5 RUN NO = 20.000

SECTION (1)MAIN LND GR DR-O DEPENDENT VARIABLE CP

Y/BML	.0380	.3100	.5820	.8530
X/CML				
.050	-.8105	-.7000	-.7091	-.6199
.230	-.1434	-.2032	-.2336	-.2358
.410	-.1788	-.0947	-.1150	-.2052
.590	-.1697	-.1231	-.1302	-.1565
.770	-.1758	-.1444	-.1474	-.1515
.950	-.1971	-.1768	-.1525	-.1413

BETA (9) = 2.990 ALPHA (3) = 2.050 Q(PSF) = 42.623 PO = 2120.5 RUN NO = 20.000

SECTION (1)MAIN LND GR DR-O DEPENDENT VARIABLE CP

Y/BML	.0380	.3100	.5820	.8530
X/CML				
.050	-.7378	-.6555	-.6403	-.6343
.230	-.1320	-.1553	-.2110	-.1806
.410	-.1979	-.0571	-.0662	-.1411
.590	-.1675	-.0875	-.0824	-.0986
.770	-.1594	-.1087	-.1047	-.0915
.950	-.1776	-.1442	-.1158	-.1138

OA163B MAIN GEAR DOOR OUTER SURFACE (RFPM02)

BETA (9) = 2.990 ALPHA (4) = 4.130 Q(PSF) = 42.823 PO = 2120.5 RUN NO = 20.000

SECTION (1)MAIN LND GR DR-O DEPENDENT VARIABLE C_P

Y/BML	.0380	.3100	.5820	.8530
X/CML				
.050	-.6634	-.6127	-.5610	-.6999
.230	-.1443	-.1362	-.2031	-.1413
.410	-.1849	-.0257	-.0237	-.0856
.590	-.1555	-.0521	-.0379	-.0399
.770	-.1454	-.0764	-.0663	-.0369
.950	-.1636	-.1150	-.0805	-.0866

BETA (9) = 2.990 ALPHA (5) = 6.190 Q(PSF) = 42.823 PO = 2120.5 RUN NO = 20.000

SECTION (1)MAIN LND GR DR-O DEPENDENT VARIABLE C_P

Y/BML	.0380	.3100	.5820	.8530
X/CML				
.050	-.6040	-.5434	-.4736	-.6384
.230	-.1905	-.1369	-.2117	-.1238
.410	-.1844	.0015	.0086	-.0338
.590	-.1500	-.0186	.0076	.0126
.770	-.1339	-.0408	-.0216	.0096
.950	-.1521	-.0803	-.0439	-.0530

BETA (9) = 2.990 ALPHA (6) = 8.260 Q(PSF) = 42.823 PO = 2120.5 RUN NO = 20.000

SECTION (1)MAIN LND GR DR-O DEPENDENT VARIABLE C_P

Y/BML	.0380	.3100	.5820	.8530
X/CML				
.050	-.5737	-.4756	-.3462	-.4605
.230	-.2542	-.1490	-.2421	-.2148
.410	-.2097	.0187	.0116	-.0156
.590	-.1632	.0126	.0490	.0561
.770	-.1298	-.0075	.0197	.0531
.950	-.1440	-.0499	-.0085	-.0186

OA163B MAIN GEAR DOOR OUTER SURFACE (RFPM02)

BETA (10) = 4.060 ALPHA (1) = -2.050 Q(PSF) = 42.778 PO = 2120.6 RUN NO = 21.000

SECTION (1)MAIN LND GR DR-O DEPENDENT VARIABLE CP

Y/BML	.0380	.3100	.5820	.8530
X/CML				
.050	-.8786	-.7558	-.7680	-.6543
.230	-.1730	-.2522	-.2644	-.2969
.410	-.2045	-.1304	-.1547	-.2654
.590	-.2024	-.1608	-.1750	-.2146
.770	-.2106	-.1781	-.1892	-.1974
.950	-.2309	-.2075	-.1903	-.1760

BETA (10) = 4.060 ALPHA (2) = .000 Q(PSF) = 42.778 PO = 2120.6 RUN NO = 21.000

SECTION (1)MAIN LND GR DR-O DEPENDENT VARIABLE CP

Y/BML	.0380	.3100	.5820	.8530
X/CML				
.050	-.8141	-.7099	-.7180	-.5702
.230	-.1623	-.1967	-.2332	-.2332
.410	-.2301	-.0965	-.1127	-.2038
.590	-.2008	-.1239	-.1299	-.1552
.770	-.1937	-.1441	-.1451	-.1401
.950	-.2129	-.1775	-.1502	-.1441

BETA (10) = 4.060 ALPHA (3) = 2.070 Q(PSF) = 42.778 PO = 2120.6 RUN NO = 21.000

SECTION (1)MAIN LND GR DR-O DEPENDENT VARIABLE CP

Y/BML	.0380	.3100	.5820	.8530
X/CML				
.050	-.7481	-.6701	-.6448	-.6691
.230	-.1777	-.1625	-.2304	-.1807
.410	-.2263	-.0622	-.0642	-.1463
.590	-.1919	-.0896	-.0835	-.0987
.770	-.1797	-.1129	-.1037	-.0825
.950	-.1980	-.1463	-.1159	-.1169

OA163B MAIN GEAR DOOR OUTER SURFACE (RFPM02)

BETA (10) = 4.060 ALPHA (4) = 4.110 Q(PSF) = 42.778 PO = 2120.6 RUN NO = 21.000

SECTION (1)MAIN LND GR DR-O DEPENDENT VARIABLE CP

Y/BML	.0380	.3100	.5820	.8530
X/CML				
.050	-.6706	-.6089	-.5583	-.7132
.230	-.2231	-.1543	-.2292	-.1502
.410	-.2191	-.0328	-.0257	-.0895
.590	-.1867	-.0551	-.0368	-.0429
.770	-.1685	-.0784	-.0611	-.0328
.950	-.1847	-.1148	-.0794	-.0885

BETA (10) = 4.060 ALPHA (5) = 6.190 Q(PSF) = 42.778 PO = 2120.6 RUN NO = 21.000

SECTION (1)MAIN LND GR DR-O DEPENDENT VARIABLE CP

Y/BML	.0380	.3100	.5820	.8530
X/CML				
.050	-.6476	-.5422	-.4389	-.5949
.230	-.2931	-.1868	-.2668	-.2070
.410	-.2475	-.0105	-.0135	-.0470
.590	-.1959	-.0237	.0106	.0127
.770	-.1685	-.0470	-.0207	.0076
.950	-.1807	-.0855	-.0460	-.0612

BETA (10) = 4.060 ALPHA (6) = 8.260 Q(PSF) = 42.778 PO = 2120.6 RUN NO = 21.000

SECTION (1)MAIN LND GR DR-O DEPENDENT VARIABLE CP

Y/BML	.0380	.3100	.5820	.8530
X/CML				
.050	-.5697	-.4775	-.3377	-.4339
.230	-.3674	-.1929	-.2800	-.2486
.410	-.2850	-.0004	-.0115	-.0419
.590	-.2141	.0015	.0471	.0552
.770	-.1706	-.0146	.0157	.0593
.950	-.1777	-.0510	-.0105	-.0136

OA163B MAIN GEAR DOOR OUTER SURFACE (RFPM02)

BETA (11) = 5.030 ALPHA (1) = -2.070 Q(PSF) = 42.767 PO = 2120.6 RUN NO = 22.000

SECTION (1)MAIN LND GR DR-O DEPENDENT VARIABLE CP

Y/BML	.0380	.3100	.5820	.8530
X/CML				
.050	-.8807	-.7604	-.7928	-.4987
.230	-.1874	-.2318	-.2450	-.2844
.410	-.2561	-.1338	-.1601	-.2692
.590	-.2339	-.1611	-.1732	-.2147
.770	-.2258	-.1773	-.1843	-.1874
.950	-.2430	-.2066	-.1854	-.1763

BETA (11) = 5.030 ALPHA (2) = .000 Q(PSF) = 42.767 PO = 2120.6 RUN NO = 22.000

SECTION (1)MAIN LND GR DR-O DEPENDENT VARIABLE CP

Y/BML	.0380	.3100	.5820	.8530
X/CML				
.050	-.8156	-.7163	-.7184	-.5432
.230	-.2029	-.2019	-.2556	-.2262
.410	-.2347	-.0966	-.1067	-.2039
.590	-.2282	-.1270	-.1270	-.1553
.770	-.2120	-.1452	-.1422	-.1250
.950	-.2303	-.1776	-.1493	-.1533

BETA (11) = 5.030 ALPHA (3) = 2.070 Q(PSF) = 42.767 PO = 2120.6 RUN NO = 22.000

SECTION (1)MAIN LND GR DR-O DEPENDENT VARIABLE CP

Y/BML	.0380	.3100	.5820	.8530
X/CML				
.050	-.7526	-.6745	-.6350	-.7424
.230	-.2559	-.1869	-.2548	-.1839
.410	-.2548	-.0673	-.0643	-.1474
.590	-.2173	-.0927	-.0795	-.0977
.770	-.2021	-.1150	-.1038	-.0734
.950	-.2153	-.1484	-.1170	-.1261

OA163B MAIN GEAR DOOR OUTER SURFACE (RFPM02)

BETA (11) = 5.030 ALPHA (4) = 4.120 Q(PSF) = 42.767 PO = 2120.6 RUN NO = 22.000

SECTION (1)MAIN LND GR DR-O DEPENDENT VARIABLE CP

Y/BML	.0380	.3100	.5820	.8530
X/CML				
.050	-.7088	-.6212	-.5437	-.7190
.230	-.3307	-.2124	-.2766	-.1941
.410	-.2817	-.0432	-.0361	-.0962
.590	-.2267	-.0626	-.0340	-.0371
.770	-.2032	-.0830	-.0636	-.0320
.950	-.2165	-.1207	-.0819	-.0942

BETA (11) = 5.030 ALPHA (5) = 6.190 Q(PSF) = 42.767 PO = 2120.6 RUN NO = 22.000

SECTION (1)MAIN LND GR DR-O DEPENDENT VARIABLE CP

Y/BML	.0380	.3100	.5820	.8530
X/CML				
.050	-.6553	-.5510	-.4032	-.5136
.230	-.4336	-.2292	-.3111	-.2929
.410	-.3223	-.0298	-.0449	-.0763
.590	-.2494	-.0348	.0056	.0066
.770	-.2059	-.0520	-.0206	.0127
.950	-.2160	-.0874	-.0450	-.0581

BETA (11) = 5.030 ALPHA (6) = 8.260 Q(PSF) = 42.767 PO = 2120.6 RUN NO = 22.000

SECTION (1)MAIN LND GR DR-O DEPENDENT VARIABLE CP

Y/BML	.0380	.3100	.5820	.8530
X/CML				
.050	-.6106	-.5195	-.3667	-.4658
.230	-.5367	-.1815	-.2696	-.2483
.410	-.3465	-.0136	-.0146	-.0429
.590	-.2514	-.0085	.0400	.0481
.770	-.2109	-.0217	.0076	.0552
.950	-.2129	-.0601	-.0176	-.0206

OA163B MAIN GEAR DOOR OUTER SURFACE (RFPM03) (27 APR 77)

REFERENCE DATA

SREF = 2690.0000 SQ.FT. XMRP = 1076.7000 IN. XO
LREF = 474.8100 INCHES YMRP = .0000 IN. YO
BREF = 936.6800 INCHES ZMRP = 375.0000 IN. ZO
SCALE = .0405

PARAMETRIC DATA

SPDBRK =	25.000	BDFLAP =	.000
ELV-L =	.000	ELV-R =	.000
PHI-N =	30.800	THETAN =	5.000
PHI-ML =	40.000	THETML =	6.200
PHI-MR =	40.000	THETMR =	6.200

BETA (1) = -5.030 ALPHA (1) = -2.080 Q(PSF) = 42.820 PO = 2117.7 RUN NO = 23.000

SECTION (1)MAIN LND GR DR-O DEPENDENT VARIABLE CP

Y/BML	.0380	.3100	.5820	.8530
X/CML				
.050	-.7994	-.7691	-.9311	-.2293
.230	-.1857	-.1452	-.1989	-.2799
.410	-.2090	-.1817	-.2009	-.2556
.590	-.1989	-.1928	-.2029	-.2029
.770	-.2090	-.2080	-.2232	-.2657
.950	-.2313	-.2414	-.2262	-.2252

BETA (1) = -5.020 ALPHA (2) = -.010 Q(PSF) = 42.820 PO = 2117.7 RUN NO = 23.000

SECTION (1)MAIN LND GR DR-O DEPENDENT VARIABLE CP

Y/BML	.0380	.3100	.5820	.8530
X/CML				
.050	-.7532	-.6722	-.8007	-.1592
.230	-.1238	-.0996	-.1228	-.2189
.410	-.1542	-.1279	-.1431	-.1845
.590	-.1512	-.1451	-.1461	-.1431
.770	-.1663	-.1623	-.1764	-.2179
.950	-.1866	-.1987	-.1805	-.1795

BETA (1) = -5.030 ALPHA (3) = 2.060 Q(PSF) = 42.820 PO = 2117.7 RUN NO = 23.000

SECTION (1)MAIN LND GR DR-O DEPENDENT VARIABLE CP

Y/BML	.0380	.3100	.5820	.8530
X/CML				
.050	-.7190	-.5915	-.6664	-.0814
.230	-.0743	-.0551	-.0500	-.1563
.410	-.1047	-.0783	-.0824	-.1209
.590	-.1067	-.0976	-.0945	-.0844
.770	-.1219	-.1188	-.1259	-.1634
.950	-.1492	-.1563	-.1370	-.1310

OA163B MAIN GEAR DOOR OUTER SURFACE (RFPM03)

BETA (1) = -5.030 ALPHA (4) = 4.110 Q(PSF) = 42 820 PO = 2117.7 RUN NO = 23.000

SECTION (1)MAIN LND GR DR-O DEPENDENT VARIABLE CP

Y/BML	.0380	.3100	.5820	.8530
X/CML				
.050	-.6450	-.5195	-.5590	-.1228
.230	-.0287	-.0166	.0086	-.0854
.410	-.0530	-.0287	-.0257	-.0591
.590	-.0591	-.0490	-.0439	-.0328
.770	-.0773	-.0743	-.0783	-.1097
.950	-.1046	-.1137	-.0935	-.0844

BETA (1) = -5.030 ALPHA (5) = 6.190 Q(PSF) = 42 820 PO = 2117.7 RUN NO = 23.000

SECTION (1)MAIN LND GR DR-O DEPENDENT VARIABLE CP

Y/BML	.0380	.3100	.5820	.8530
X/CML				
.050	-.5134	-.4528	-.4680	-.3165
.230	.0096	.0197	.0318	-.0337
.410	-.0044	.0217	.0288	.0116
.590	-.0145	-.0014	.0086	.0247
.770	-.0307	-.0307	-.0327	-.0691
.950	-.0610	-.0681	-.0479	-.0499

BETA (1) = -5.030 ALPHA (6) = 8.260 Q(PSF) = 42.820 PO = 2117.7 RUN NO = 23.000

SECTION (1)MAIN LND GR DR-O DEPENDENT VARIABLE CP

Y/BML	.0380	.3100	.5820	.8530
X/CML				
.050	-.3644	-.4070	-.3908	-.4172
.230	.0451	.0695	.0492	.0289
.410	.0431	.0756	.0847	.0816
.590	.0350	.0502	.0583	.0766
.770	.0137	.0147	.0137	-.0217
.950	-.0156	-.0258	-.0085	-.0105

OA163B MAIN GEAR DOOR OUTER SURFACE (RFPM03)

BETA (2) = -4.030 ALPHA (1) = -2.080 Q(PSF) = 42.867 PO = 2117.8 RUN NO = 24.000

SECTION (1)MAIN LND GR DR-O DEPENDENT VARIABLE CP

Y/BML	.0380	.3100	.5820	.8530
X/CML				
.050	-.8066	-.7461	-.9106	-.2365
.230	-.1608	-.1386	-.1881	-.2718
.410	-.1891	-.1740	-.1982	-.2597
.590	-.1891	-.1881	-.2012	-.2103
.770	-.2022	-.2042	-.2194	-.2557
.950	-.2224	-.2365	-.2214	-.2143

BETA (2) = -4.030 ALPHA (2) = .000 Q(PSF) = 42.867 PO = 2117.8 RUN NO = 24.000

SECTION (1)MAIN LND GR DR-O DEPENDENT VARIABLE CP

Y/BML	.0380	.3100	.5820	.8530
X/CML				
.050	-.7916	-.6660	-.7774	-.1554
.230	-.1078	-.1068	-.1149	-.2162
.410	-.1422	-.1250	-.1422	-.1919
.590	-.1453	-.1432	-.1483	-.1493
.770	-.1605	-.1635	-.1757	-.2101
.950	-.1838	-.1979	-.1787	-.1736

BETA (2) = -4.030 ALPHA (3) = 2.050 Q(PSF) = 42.867 PO = 2117.9 RUN NO = 24.000

SECTION (1)MAIN LND GR DR-O DEPENDENT VARIABLE CP

Y/BML	.0380	.3100	.5820	.8530
X/CML				
.050	-.7367	-.5860	-.6517	-.1309
.230	-.0661	-.0651	-.0459	-.1491
.410	-.0814	-.0752	-.0823	-.1339
.590	-.0975	-.0955	-.0985	-.0934
.770	-.1137	-.1167	-.1268	-.1551
.950	-.1410	-.1531	-.1349	-.1258

OA163B MAIN GEAR DOOR OUTER SURFACE (RFPM03)

BETA (2) = -4.030 ALPHA (4) = 4.120 Q(PSF) = 42.867 PO = 2117.8 RUN NO = 24.000

SECTION (1)MAIN LND GR DR-O DEPENDENT VARIABLE CP

Y/BML	.0380	.3100	.5820	.8530
X/CML				
.050	-.6259	-.5178	-.5440	-.2702
.230	-.0297	-.0337	-.0024	-.0924
.410	-.0459	-.0257	-.0216	-.0641
.590	-.0540	-.0439	-.0408	-.0368
.770	-.0721	-.0742	-.0772	-.1045
.950	-.0984	-.1085	-.0913	-.0822

BETA (2) = -4.040 ALPHA (5) = 6.190 Q(PSF) = 42.867 PO = 2117.8 RUN NO = 24.000

SECTION (1)MAIN LND GR DR-O DEPENDENT VARIABLE CP

Y/BML	.0380	.3100	.5820	.8530
X/CML				
.050	-.4938	-.4634	-.4634	-.4351
.230	.0076	.0116	-.0034	-.0439
.410	.0035	.0258	.0298	.0116
.590	-.0095	.0005	.0066	.0249
.770	-.0267	-.0297	-.0287	-.0590
.950	-.0540	-.0671	-.0469	-.0439

BETA (2) = -4.040 ALPHA (6) = 8.260 Q(PSF) = 42.867 PO = 2117.8 RUN NO = 24.000

SECTION (1)MAIN LND GR DR-O DEPENDENT VARIABLE CP

Y/BML	.0380	.3100	.5820	.8530
X/CML				
.050	-.3593	-.4149	-.3876	-.5059
.230	.0430	.0581	.0086	.0217
.410	.0470	.0743	.0794	.0733
.590	.0359	.0480	.0612	.0824
.770	.0137	.0157	.0207	-.0004
.950	-.0146	-.0257	-.0044	-.0014

OA163B MAIN GEAR DOOR OUTER SURFACE (RFPM03)

BETA (3) = -2.960 ALPHA (1) = -2.060 Q(PSF) = 12.893 PO = 2117.8 RUN NO = 25.000

SECTION (1)MAIN LND GR DR-O DEPENDENT VARIABLE CP

Y/BML	.0380	.3100	.5820	.8530
X/CML				
.050	-.8371	-.7239	-.8755	-.2389
.230	-.1419	-.1520	-.1752	-.2692
.410	-.1752	-.1691	-.1934	-.2672
.590	-.1782	-.1853	-.1985	-.2156
.770	-.1914	-.2005	-.2166	-.2429
.950	-.2136	-.2318	-.2177	-.2096

BETA (3) = -2.960 ALPHA (2) = .010 Q(PSF) = 12.893 PO = 2117.8 RUN NO = 25.000

SECTION (1)MAIN LND GR DR-O DEPENDENT VARIABLE CP

Y/BML	.0380	.3100	.5820	.8530
X/CML				
.050	-.8143	-.6501	-.7464	-.1678
.230	-.0997	-.1139	-.1007	-.2102
.410	-.1201	-.1190	-.1342	-.2031
.590	-.1362	-.1383	-.1464	-.1545
.770	-.1514	-.1585	-.1697	-.1940
.950	-.1768	-.1920	-.1737	-.1636

BETA (3) = -2.960 ALPHA (3) = 2.050 Q(PSF) = 12.893 PO = 2117.8 RUN NO = 25.000

SECTION (1)MAIN LND GR DR-O DEPENDENT VARIABLE CP

Y/BML	.0380	.3100	.5820	.8530
X/CML				
.050	-.7325	-.5911	-.6406	-.2438
.230	-.0681	-.0792	-.0519	-.1509
.410	-.0822	-.0731	-.0792	-.1408
.590	-.0913	-.0923	-.0963	-.1014
.770	-.1095	-.1145	-.1236	-.1458
.950	-.1357	-.1499	-.1307	-.1165

C-2

OA163B MAIN GEAR DOOR OUTER SURFACE (RFPM03)

BETA (3) = -2.960 ALPHA (4) = 4.120 Q(PSF) = 42.893 PO = 2117.8 RUN NO = 25.000

SECTION (1)MAIN LND GR DR-O DEPENDENT VARIABLE CP

Y/BML	.0380	.3100	.5820	.8530
X/CML				
.050	-.6141	-.5231	-.5504	-.4159
.230	-.0338	-.0550	-.0348	-.1066
.410	-.0398	-.0226	-.0206	-.0671
.590	-.0499	-.0439	-.0398	-.0378
.770	-.0661	-.0691	-.0702	-.1025
.950	-.0934	-.1035	-.0853	-.0873

BETA (3) = -2.960 ALPHA (5) = 6.200 Q(PSF) = 42.893 PO = 2117.8 RUN NO = 25.000

SECTION (1)MAIN LND GR DR-O DEPENDENT VARIABLE CP

Y/BML	.0380	.3100	.5820	.8530
X/CML				
.050	-.4856	-.4755	-.4624	-.5178
.230	.0005	-.0034	-.0397	-.0487
.410	.0035	.0267	.0277	.0055
.590	-.0095	.0015	.0086	.0237
.770	-.0256	-.0276	-.0266	-.0517
.950	-.0548	-.0658	-.0477	-.0437

BETA (3) = -2.960 ALPHA (6) = 8.280 Q(PSF) = 42.893 PO = 2117.8 RUN NO = 25.000

SECTION (1)MAIN LND GR DR-O DEPENDENT VARIABLE CP

Y/BML	.0380	.3100	.5820	.8530
X/CML				
.050	-.3623	-.4321	-.3886	-.5433
.230	.0339	.0460	-.0287	.0137
.410	.0399	.0753	.0794	.0682
.590	.0339	.0480	.0622	.0784
.770	.0177	.0137	.0228	.0137
.950	-.0166	-.0247	-.0034	.0025

OA163B MAIN GEAR DOOR OUTER SURFACE (RFPM03)

BETA (4) = -2.030 ALPHA (1) = -2.060 Q(PSF) = 42.872 PO = 2117.8 RUN NO = 26.000

SECTION (1)MAIN LND GR DR-O DEPENDENT VARIABLE CP

Y/BML	.0380	.3100	.5820	.8530
X/CML				
.050	-.8749	-.7155	-.8396	-.2344
.230	-.1295	-.1648	-.1588	-.2637
.410	-.1628	-.1638	-.1900	-.2737
.590	-.1709	-.1809	-.1981	-.2193
.770	-.1840	-.1981	-.2142	-.2334
.950	-.2072	-.2304	-.2122	-.1951

BETA (4) = -2.020 ALPHA (2) = .020 Q(PSF) = 42.872 PO = 2117.8 RUN NO = 26.000

SECTION (1)MAIN LND GR DR-O DEPENDENT VARIABLE CP

Y/BML	.0380	.3100	.5820	.8530
X/CML				
.050	-.8274	-.6493	-.7262	-.2403
.230	-.1006	-.1340	-.0996	-.2069
.410	-.1209	-.1128	-.1290	-.2049
.590	-.1320	-.1350	-.1462	-.1634
.770	-.1441	-.1553	-.1664	-.1846
.950	-.1705	-.1877	-.1715	-.1522

BETA (4) = -2.030 ALPHA (3) = 2.070 Q(PSF) = 42.872 PO = 2117.8 RUN NO = 26.000

SECTION (1)MAIN LND GR DR-O DEPENDENT VARIABLE CP

Y/BML	.0380	.3100	.5820	.8530
X/CML				
.050	-.7213	-.5892	-.6316	-.3825
.230	-.0700	-.1012	-.0750	-.1597
.410	-.0770	-.0690	-.0730	-.1395
.590	-.0881	-.0901	-.0952	-.1012
.770	-.1032	-.1123	-.1214	-.1365
.950	-.1305	-.1446	-.1305	-.1153

OA163B MAIN GEAR DOOR OUTER SURFACE (RFPM03)

BETA (4) = -2.020 ALPHA (4) = 4.120 Q(PSF) = 42.872 PO = 2117.8 RUN NO = 26.000

SECTION (1)MAIN LND GR DR-O DEPENDENT VARIABLE CP

Y/BML	.0380	.3100	.5820	.8530
X/CML				
.050	-.6167	-.5440	-.5470	-.5339
.230	-.0368	-.0651	-.0782	-.1125
.410	-.0378	-.0176	-.0216	-.0691
.590	-.0469	-.0418	-.0418	-.0368
.770	-.0630	-.0701	-.0742	-.0944
.950	-.0913	-.1055	-.0863	-.0812

BETA (4) = -2.020 ALPHA (5) = 6.200 Q(PSF) = 42.872 PO = 2117.8 RUN NO = 26.000

SECTION (1)MAIN LND GR DR-O DEPENDENT VARIABLE CP

Y/BML	.0380	.3100	.5820	.8530
X/CML				
.050	-.4821	-.4973	-.4699	-.5886
.230	-.0085	-.0146	-.0724	-.0521
.410	-.0014	.0319	.0259	-.0004
.590	-.0085	.0025	.0117	.0238
.770	-.0247	-.0258	-.0258	-.0389
.950	-.0552	-.0663	-.0450	-.0400

BETA (4) = -2.020 ALPHA (6) = 8.270 Q(PSF) = 42.872 PO = 2117.8 RUN NO = 26.000

SECTION (1)MAIN LND GR DR-O DEPENDENT VARIABLE CP

Y/BML	.0380	.3100	.5820	.8530
X/CML				
.050	-.3899	-.4404	-.3888	-.5649
.230	.0197	.0288	-.0530	.0015
.410	.0177	.0713	.0774	.0582
.590	.0177	.0460	.0592	.0784
.770	-.0014	.0147	.0228	.0238
.950	-.0318	-.0297	-.0004	.0005

OA163B MAIN GEAR DOOR OUTER SURFACE (RFPM03)

BETA (5) = -1.030 ALPHA (1) = -2.060 Q(PSF) = 42.872 PO = 2117.8 RUN NO = 27.000

SECTION (1)MAIN LND GR DR-O DEPENDENT VARIABLE CP

Y/BML	.0380	.3100	.5820	.8530
X/CML				
.050	-.8966	-.7101	-.8119	-.2575
.230	-.1325	-.1788	-.1506	-.2655
.410	-.1536	-.1577	-.1808	-.2706
.590	-.1627	-.1758	-.1929	-.2232
.770	-.1758	-.1939	-.2111	-.2272
.950	-.2000	-.2222	-.2091	-.1859

BETA (5) = -1.030 ALPHA (2) = .000 Q(PSF) = 42.872 PO = 2117.8 RUN NO = 27.000

SECTION (1)MAIN LND GR DR-O DEPENDENT VARIABLE CP

Y/BML	.0380	.3100	.5820	.8530
X/CML				
.050	-.8163	-.6474	-.7071	-.3522
.230	-.1005	-.1521	-.1146	-.2127
.410	-.1126	-.1106	-.1283	-.1965
.590	-.1237	-.1338	-.1440	-.1601
.770	-.1399	-.1510	-.1602	-.1733
.950	-.1642	-.1814	-.1642	-.1430

BETA (5) = -1.030 ALPHA (3) = 2.060 Q(PSF) = 42.872 PO = 2117.8 RUN NO = 27.000

SECTION (1)MAIN LND GR DR-O DEPENDENT VARIABLE CP

Y/BML	.0380	.3100	.5820	.8530
X/CML				
.050	-.7265	-.6033	-.6255	-.5235
.230	-.0711	-.1246	-.1135	-.1771
.410	-.0751	-.0630	-.0741	-.1367
.590	-.0832	-.0832	-.0943	-.1014
.770	-.0994	-.1105	-.1208	-.1347
.950	-.1265	-.1428	-.1276	-.1196

OA163B MAIN GEAR DOOR OUTER SURFACE (RFPM03)

BETA (5) = -1.030 ALPHA (4) = 4.120 Q(PSF) = 42.872 PO = 2117.8 RUN NO = 27.000

SECTION (1)MAIN LND GR DR-O DEPENDENT VARIABLE CP

Y/BML	.0380	.3100	.5820	.8530
X/CML				
.050	-.6138	-.5571	-.5470	-.6037
.230	-.0439	-.0783	-.1138	-.1169
.410	-.0389	-.0125	-.0206	-.0713
.590	-.0480	-.0389	-.0339	-.0379
.770	-.0632	-.0822	-.0672	-.0854
.950	-.0925	-.1047	-.0854	-.0794

BETA (5) = -1.030 ALPHA (5) = 6.190 Q(PSF) = 42.872 PO = 2117.8 RUN NO = 27.000

SECTION (1)MAIN LND GR DR-O DEPENDENT VARIABLE CP

Y/BML	.0380	.3100	.5820	.8530
X/CML				
.050	-.5066	-.5127	-.4752	-.6264
.230	-.0176	-.0293	-.0927	-.0572
.410	-.0278	.0239	.0269	-.0085
.590	-.0268	-.0014	.0096	.0188
.770	-.0440	-.0288	-.0227	-.0237
.950	-.0704	-.0684	-.0430	-.0400

BETA (5) = -1.030 ALPHA (6) = 8.280 Q(PSF) = 42.872 PO = 2117.8 RUN NO = 27.000

SECTION (1)MAIN LND GR DR-O DEPENDENT VARIABLE CP

Y/BML	.0380	.3100	.5820	.8530
X/CML				
.050	-.4194	-.4436	-.3881	-.5556
.230	.0035	-.0135	-.0933	-.0246
.410	-.0347	.0661	.0712	.0449
.590	-.0206	.0409	.0560	.0762
.770	-.0236	.0116	.0257	.0379
.950	-.0499	-.0287	-.0024	-.0034

OA163B MAIN GEAR DOOR OUTER SURFACE (RFPM03)

BETA (6) = .030 ALPHA (1) = .000 Q(PSF) = 42.985 PO = 2117.8 RUN NO = 28.000

SECTION (1)MAIN LND GR DR-O DEPENDENT VARIABLE CP

X/CML \ Y/BML	.0380	.3100	.5820	.8530
.050	-.8203	-.6615	-.7007	-.5078
.230	-.1059	-.1742	-.1461	-.2355
.410	-.1089	-.1079	-.1230	-.2104
.590	-.1210	-.1280	-.1431	-.1632
.770	-.1340	-.1491	-.1632	-.1742
.950	-.1602	-.1802	-.1672	-.1471

BETA (6) = .030 ALPHA (2) = 2.070 Q(PSF) = 42.985 PO = 2117.8 RUN NO = 28.000

SECTION (1)MAIN LND GR DR-O DEPENDENT VARIABLE CP

X/CML \ Y/BML	.0380	.3100	.5820	.8530
.050	-.7241	-.6164	-.6224	-.6154
.230	-.0819	-.1373	-.1534	-.1826
.410	-.0789	-.0568	-.0688	-.1433
.590	-.0870	-.0839	-.0910	-.1010
.770	-.1021	-.1091	-.1141	-.1262
.950	-.1292	-.1413	-.1252	-.1141

BETA (6) = .030 ALPHA (3) = 4.130 Q(PSF) = 42.985 PO = 2117.8 RUN NO = 28.000

SECTION (1)MAIN LND GR DR-O DEPENDENT VARIABLE CP

X/CML \ Y/BML	.0380	.3100	.5820	.8530
.050	-.6143	-.5709	-.5537	-.6567
.230	-.0600	-.0862	-.1418	-.1216
.410	-.0650	-.0166	-.0216	-.0751
.590	-.0670	-.0418	-.0398	-.0398
.770	-.0822	-.0691	-.0681	-.0731
.950	-.1074	-.1054	-.0812	-.0792

OA163B MAIN GEAR DOOR OUTER SURFACE (RFPM03)

BETA (6) = .030 ALPHA (4) = 6.210 Q(PSF) = 42.985 PO = 2117.8 RUN NO = 28.000

SECTION (1)MAIN LND GR DR-O DEPENDENT VARIABLE CP

Y/BML	.0380	.3100	.5820	.8530
X/CML				
.050	-.5266	-.5144	-.4730	-.6470
.230	-.0348	-.0540	-.1259	-.0702
.410	-.0783	.0248	.0238	-.0176
.590	-.0591	-.0014	.0127	.0187
.770	-.0672	-.0297	-.0196	-.0075
.950	-.0884	-.0702	-.0419	-.0409

BETA (7) = .960 ALPHA (1) = .000 Q(PSF) = 42.767 PO = 2117.2 RUN NO = 29.000

SECTION (1)MAIN LND GR DR-O DEPENDENT VARIABLE CP

Y/BML	.0380	.3100	.5820	.8530
X/CML				
.050	-.8217	-.6703	-.6966	-.6189
.230	-.1134	-.1891	-.1810	-.2365
.410	-.1134	-.0993	-.1154	-.2082
.590	-.1225	-.1255	-.1386	-.1618
.770	-.1376	-.1447	-.1578	-.1679
.950	-.1638	-.1770	-.1618	-.1487

BETA (7) = .960 ALPHA (2) = 2.070 Q(PSF) = 42.767 PO = 2117.2 RUN NO = 29.000

SECTION (1)MAIN LND GR DR-O DEPENDENT VARIABLE CP

Y/BML	.0380	.3100	.5820	.8530
X/CML				
.050	-.7326	-.6360	-.6258	-.6746
.230	-.0980	-.1499	-.1865	-.1835
.410	-.1072	-.0553	-.0696	-.1479
.590	-.1072	-.0848	-.0899	-.1031
.770	-.1224	-.1102	-.1143	-.1184
.950	-.1489	-.1448	-.1235	-.1123

OA163B MAIN GEAR DOOR OUTER SURFACE (RFPM03)

BETA (7) = .960 ALPHA (3) = 4.130 Q(PSF) = 42.767 PO = 2117.2 RUN NO = 29.000

SECTION (1)MAIN LND GR DR-O DEPENDENT VARIABLE CP

Y/BML	.0380	.3100	.5820	.8530
X/CML				
.050	-.6323	-.5787	-.5575	-.6717
.230	-.0742	-.1015	-.1682	-.1227
.410	-.1167	-.0135	-.0216	-.0813
.590	-.1025	-.0149	-.0378	-.0408
.770	-.1055	-.0702	-.0651	-.0540
.950	-.1268	-.1076	-.0813	-.0823

BETA (7) = .960 ALPHA (4) = 6.200 Q(PSF) = 42.767 PO = 2117.2 RUN NO = 29.000

SECTION (1)MAIN LND GR DR-O DEPENDENT VARIABLE CP

Y/BML	.0380	.3100	.5820	.8530
X/CML				
.050	-.5636	-.5239	-.4802	-.6601
.230	-.0665	-.0878	-.1651	-.0868
.410	-.1214	.0178	.0229	-.0309
.590	-.0909	-.0055	.0107	.0147
.770	-.0858	-.0329	-.0217	.0036
.950	-.1092	-.0746	-.0441	-.0472

BETA (8) = 1.950 ALPHA (1) = .000 Q(PSF) = 42.910 PO = 2117.1 RUN NO = 30.000

SECTION (1)MAIN LND GR DR-O DEPENDENT VARIABLE CP

Y/BML	.0380	.3100	.5820	.8530
X/CML				
.050	-.8106	-.6827	-.6939	-.6787
.230	-.1272	-.2037	-.2198	-.2439
.410	-.1363	-.0960	-.1131	-.2107
.590	-.1403	-.1232	-.1353	-.1654
.770	-.1544	-.1443	-.1544	-.1634
.950	-.1785	-.1755	-.1564	-.1483

OA163B MAIN GEAR DOOR OUTER SURFACE (RFPM03)

BETA (8) = 1.940 ALPHA (2) = 2.060 Q(PSF) = 42.910 PO = 2117.1 RUN NO = 30.000

SECTION (1)MAIN LND GR DR-O DEPENDENT VARIABLE CP

Y/BML	.0380	.3100	.5820	.8530
X/CML				
.050	-.7308	-.6398	-.6357	-.6833
.230	-.1097	-.1511	-.2088	-.1886
.410	-.1542	-.0540	-.0702	-.1491
.590	-.1380	-.0844	-.0864	-.1026
.770	-.1430	-.1087	-.1087	-.1056
.950	-.1643	-.1430	-.1208	-.1157

BETA (8) = 1.940 ALPHA (3) = 4.140 Q(PSF) = 42.910 PO = 2117.1 RUN NO = 30.000

SECTION (1)MAIN LND GR DR-O DEPENDENT VARIABLE CP

Y/BML	.0380	.3100	.5820	.8530
X/CML				
.050	-.6559	-.5939	-.5644	-.7209
.230	-.1051	-.1295	-.1976	-.1366
.410	-.1640	-.0187	-.0197	-.0919
.590	-.1335	-.0271	-.0370	-.0451
.770	-.1264	-.0236	-.0834	-.0431
.950	-.1478	-.0102	-.0807	-.0878

BETA (8) = 1.940 ALPHA (4) = 6.200 Q(PSF) = 42.910 PO = 2117.1 RUN NO = 30.000

SECTION (1)MAIN LND GR DR-O DEPENDENT VARIABLE CP

Y/BML	.0380	.3100	.5820	.8530
X/CML				
.050	-.5868	-.5305	-.4782	-.6512
.230	-.1251	-.1141	-.1945	-.1161
.410	-.1503	.0116	.0156	-.0406
.590	-.1221	-.0125	.0096	.0146
.770	-.1110	-.0396	-.0225	.0096
.950	-.1312	-.0778	-.0416	-.0507

OA163B MAIN GEAR DOOR OUTER SURFACE (RFPM03)

BETA (9) = 5.000 ALPHA (1) = .000 Q(PSF) = 42.885 PO = 2117.2 RUN NO = 31.000

SECTION (1)MAIN LND GR DR-O DEPENDENT VARIABLE CP

Y/BML	.0380	.3100	.5820	.8530
X/CML				
.050	.8255	-.7201	-.7251	-.5535
.230	-.2152	-.2222	-.2674	-.2393
.410	-.2714	-.0998	-.1098	-.2162
.590	-.2353	-.1299	-.1279	-.1640
.770	-.2182	-.1500	-.1439	-.1319
.950	-.2333	-.1811	-.1770	-.1620

BETA (9) = 5.000 ALPHA (2) = 2.080 Q(PSF) = 42.885 PO = 2117.2 RUN NO = 31.000

SECTION (1)MAIN LND GR DR-O DEPENDENT VARIABLE CP

Y/BML	.0380	.3100	.5820	.8530
X/CML				
.050	-.7694	-.6753	-.6419	-.7522
.230	-.2766	-.2058	-.2675	-.1977
.410	-.2716	-.0682	-.0611	-.1674
.590	-.2301	-.0965	-.0803	-.1016
.770	-.2109	-.1178	-.1036	-.0743
.950	-.2230	-.1502	-.1188	-.1299

BETA (9) = 4.990 ALPHA (3) = 4.130 Q(PSF) = 42.885 PO = 2117.2 RUN NO = 31.000

SECTION (1)MAIN LND GR DR-O DEPENDENT VARIABLE CP

Y/BML	.0380	.3100	.5820	.8530
X/CML				
.050	-.7147	-.6154	-.5526	-.7380
.230	-.3651	-.2304	-.2871	-.2000
.410	-.2912	-.0419	-.0389	-.1139
.590	-.2334	-.0612	-.0348	-.0419
.770	-.2132	-.0825	-.0632	-.0308
.950	-.2294	-.1200	-.0855	-.0997

OA163B MAIN GEAR DOOR OUTER SURFACE (RFPM03)

BETA (3) = 4.990 ALPHA (4) = 6.220 Q(PSF) = 42.885 PO = 2117.2 RUN NO = 31.000

SECTION 1)MAIN LND GR DR-O DEPENDENT VARIABLE CP

Y/BML	.0380	.3100	.5820	.8530
X/CML				
.050	-.6307	-.5446	-.4037	-.5061
.230	-.4919	-.2730	-.3348	-.3146
.410	-.3521	-.0338	-.0572	-.0957
.590	-.2639	-.0379	.0066	.0066
.770	-.2213	-.0531	-.0197	.0127
.950	-.2274	-.0896	-.0501	-.0602

OA163B MAIN GEAR DOOR OUTER SURFACE (RFPM04) (27 APR 77)

REFERENCE DATA

SREF = 2690.0000 SQ.FT. XMRP = 1076.7000 IN. XO
LREF = 474.8100 INCHES YMRP = .0000 IN. YO
BREF = 936.6800 INCHES ZMRP = 375.0000 IN. ZO
SCALE = .0405

PARAMETRIC DATA

SPDBRK =	25.000	BDFLAP =	.000
ELV-L =	.000	ELV-R =	.000
PHI-N =	25.000	THETAN =	5.000
PHI-ML =	26.000	THETML =	4.000
PHI-MR =	26.000	THETMR =	4.000

BETA (1) = -5.030 ALPHA (1) = .000 Q(PSF) = 42.797 PO = 2115.0 RUN NO = 32.000

SECTION (1)MAIN LND GR DR-O DEPENDENT VARIABLE CP

Y/BML	.0380	.3100	.5820	.8530
X/CML				
.050	-.7105	-.6721	-.3428	-.2145
.230	-.1226	-.1267	-.1267	-.2156
.410	-.1418	-.1226	-.1378	-.1681
.590	-.1499	-.1418	-.1469	-.1398
.770	-.1671	-.1610	-.1721	-.2075
.950	-.1873	-.1933	-.1752	-.1782

BETA (1) = -5.030 ALPHA (2) = 2.070 Q(PSF) = 42.797 PO = 2115.0 RUN NO = 32.000

SECTION (1)MAIN LND GR DR-O DEPENDENT VARIABLE CP

Y/BML	.0380	.3100	.5820	.8530
X/CML				
.050	-.6902	-.5980	-.7206	-.1300
.230	-.0703	-.0875	-.0541	-.1533
.410	-.0936	-.0754	-.0794	-.1078
.590	-.1057	-.0946	-.0926	-.0845
.770	-.1209	-.1179	-.1260	-.1554
.950	-.1463	-.1513	-.1311	-.1371

BETA (1) = -5.030 ALPHA (3) = 4.130 Q(PSF) = 42.797 PO = 2115.0 RUN NO = 32.000

SECTION (1)MAIN LND GR DR-O DEPENDENT VARIABLE CP

Y/BML	.0380	.3100	.5820	.8530
X/CML				
.050	-.6617	-.5349	-.6079	-.1333
.230	-.0288	-.0440	.0015	-.0907
.410	-.0481	-.0288	-.0258	-.0481
.590	-.0613	-.0491	-.0430	-.0298
.770	-.0785	-.0755	-.0805	-.1039
.950	-.1059	-.1099	-.0907	-.0927

OA163B MAIN GEAR DOOR OUTER SURFACE (RFPM04)

BETA (1) = -5.030 ALPHA (4) = 6.210 Q(PSF) = 42.797 PO = 2115.0 RUN NO = 32.000

SECTION (1)MAIN LND GR DR-O DEPENDENT VARIABLE CP

Y/BML	.0380	.3100	.5820	.8530
X/CML				
.050	-.5983	-.4686	-.5060	-.2477
.230	.0066	-.0014	.0309	-.0338
.410	-.0045	.0198	.0309	.0218
.590	-.0156	-.0014	.0066	.0269
.770	-.0349	-.0308	-.0308	-.0531
.950	-.0602	-.0683	-.0470	-.0531

BETA (2) = -2.000 ALPHA (1) = .000 Q(PSF) = 42.802 PO = 2115.0 RUN NO = 33.000

SECTION (1)MAIN LND GR DR-O DEPENDENT VARIABLE CP

Y/BML	.0380	.3100	.5820	.8530
X/CML				
.050	-.8061	-.6617	-.7556	-.2559
.230	-.1094	-.1559	-.1105	-.2195
.410	-.1175	-.1125	-.1276	-.1993
.590	-.1296	-.1337	-.1407	-.1549
.770	-.1448	-.1539	-.1630	-.1781
.950	-.1670	-.1821	-.1680	-.1569

BETA (2) = -2.010 ALPHA (2) = 2.050 Q(PSF) = 42.802 PO = 2115.0 RUN NO = 33.000

SECTION (1)MAIN LND GR DR-O DEPENDENT VARIABLE CP

Y/BML	.0380	.3100	.5820	.8530
X/CML				
.050	-.7426	-.6051	-.6576	-.3199
.230	-.0722	-.1197	-.0783	-.1632
.410	-.0783	-.0661	-.0742	-.1329
.590	-.0904	-.0884	-.0914	-.0944
.770	-.1045	-.1106	-.1187	-.1288
.950	-.1318	-.1409	-.1238	-.1177

OA163B MAIN GEAR DOOR OUTER SURFACE (RFPM04)

BETA (2) = -2.010 ALPHA (3) = 4.120 Q(PSF) = 42.802 PO = 2115.0 RUN NO = 33.000

SECTION (1)MAIN LND GR DR-O DEPENDENT VARIABLE CP

Y/BML	.0380	.3100	.5820	.8530
X/CML				
.050	-.6325	-.5564	-.5757	-.4123
.230	-.0379	-.0704	-.0664	-.1008
.410	-.0359	-.0176	-.0227	-.0552
.590	-.0491	-.0430	-.0420	-.0359
.770	-.0643	-.0684	-.0724	-.0897
.950	-.0917	-.1039	-.0826	-.0816

BETA (2) = -2.010 ALPHA (4) = 6.220 Q(PSF) = 42.802 PO = 2115.0 RUN NO = 33.000

SECTION (1)MAIN LND GR DR-O DEPENDENT VARIABLE CP

Y/BML	.0380	.3100	.5820	.8530
X/CML				
.050	-.5056	-.5127	-.4996	-.4661
.230	-.0045	-.0187	-.0511	-.0420
.410	-.0004	.0299	.0259	.0127
.590	-.0116	-.0004	.0056	.0208
.770	-.0268	-.0288	-.0237	-.0369
.950	-.0532	-.0653	-.0390	-.0359

BETA (3) = -1.010 ALPHA (1) = .020 Q(PSF) = 42.885 PO = 2115.0 RUN NO = 34.000

SECTION (1)MAIN LND GR DR-O DEPENDENT VARIABLE CP

Y/BML	.0380	.3100	.5820	.8530
X/CML				
.050	-.8122	-.6650	-.7396	-.3362
.230	-.1053	-.1668	-.1214	-.2243
.410	-.1123	-.1083	-.1224	-.1960
.590	-.1255	-.1285	-.1396	-.1537
.770	-.1406	-.1456	-.1597	-.1688
.950	-.1628	-.1769	-.1608	-.1517

OA163B MAIN GEAR DOOR OUTER SURFACE (RFPM04)

BETA (3) = -1.010 ALPHA (2) = 2.060 Q(PSF) = 42.885 PO = 2115.0 RUN NO = 34.000

SECTION (1)MAIN LND GR DR-O DEPENDENT VARIABLE CP

Y/BML	.0380	.3100	.5820	.8530
X/CML				
.050	-.7299	-.6204	-.6620	-.3864
.230	-.0744	-.1281	-.1037	-.1666
.410	-.0754	-.0642	-.0713	-.1311
.590	-.0885	-.0885	-.0926	-.0956
.770	-.1027	-.1098	-.1169	-.1301
.950	-.1291	-.1433	-.1240	-.1169

BETA (3) = -1.010 ALPHA (3) = 4.130 Q(PSF) = 42.885 PO = 2115.0 RUN NO = 34.000

SECTION (1)MAIN LND GR DR-O DEPENDENT VARIABLE CP

Y/BML	.0380	.3100	.5820	.8530
X/CML				
.050	-.6073	-.5780	-.5750	-.4566
.230	-.0419	-.0732	-.0955	-.1016
.410	-.0409	-.0156	-.0227	-.0550
.590	-.0500	-.0439	-.0409	-.0368
.770	-.0651	-.0692	-.0702	-.0833
.950	-.0935	-.1046	-.0813	-.0753

BETA (3) = -1.010 ALPHA (4) = 6.200 Q(PSF) = 42.885 PO = 2115.0 RUN NO = 34.000

SECTION (1)MAIN LND GR DR-O DEPENDENT VARIABLE CP

Y/BML	.0380	.3100	.5820	.8530
X/CML				
.050	-.4918	-.5190	-.4938	-.5049
.230	-.0145	-.0176	-.0741	-.0438
.410	-.0115	.0278	.0237	.0116
.590	-.0165	.0005	.0086	.0197
.770	-.0347	-.0297	-.0216	-.0287
.950	-.0630	-.0680	-.0387	-.0337

OA163B MAIN GEAR DOOR OUTER SURFACE (RFPM04)

BETA (4) = .010 ALPHA (1) = .000 Q(PSF) = 42.850 PO = 2115.0 RUN NO = 35.000

SECTION (1)MAIN LND GR DR-O DEPENDENT VARIABLE CP

Y/BML	.0380	.3100	.5820	.8530
X/CML				
.050	-.8044	-.6692	-.7206	-.3918
.230	-.1073	-.1800	-.1416	-.2294
.410	-.1073	-.1033	-.1174	-.1941
.590	-.1214	-.1265	-.1366	-.1517
.770	-.1336	-.1446	-.1557	-.1638
.950	-.1588	-.1759	-.1588	-.1457

BETA (4) = .010 ALPHA (2) = 2.070 Q(PSF) = 42.850 PO = 2115.0 RUN NO = 35.000

SECTION (1)MAIN LND GR DR-O DEPENDENT VARIABLE CP

Y/BML	.0380	.3100	.5820	.8530
X/CML				
.050	-.7039	-.6330	-.6553	-.4377
.230	-.0783	-.1300	-.1279	-.1654
.410	-.0783	-.0601	-.0702	-.1269
.590	-.0875	-.0864	-.0905	-.0945
.770	-.1006	-.1067	-.1138	-.1219
.950	-.1290	-.1401	-.1198	-.1148

BETA (4) = .010 ALPHA (3) = 4.130 Q(PSF) = 42.850 PO = 2115.0 RUN NO = 35.000

SECTION (1)MAIN LND GR DR-O DEPENDENT VARIABLE CP

Y/BML	.0380	.3100	.5820	.8530
X/CML				
.050	-.5857	-.5806	-.5745	-.4885
.230	-.0531	-.0703	-.1128	-.1017
.410	-.0541	-.0155	-.0217	-.0571
.590	-.0581	-.0429	-.0409	-.0348
.770	-.0753	-.0672	-.0642	-.0753
.950	-.1027	-.1037	-.0753	-.0682

OA163B MAIN GEAR DOOR OUTER SURFACE (RFPM04)

BETA (4) = .010 ALPHA (4) = 6.200 Q(PSF) = 42.850 PO = 2115.0 RUN NO = 35.000

SECTION (1)MAIN LND GR DR-O DEPENDENT VARIABLE CP

Y/BML	.0380	.3100	.5820	.8530
X/CML				
.050	-.4862	-.5267	-.4862	-.5500
.230	-.0267	-.0217	-.0966	-.0449
.410	-.0449	.0248	.0258	.0096
.590	-.0419	-.0024	.0096	.0208
.770	-.0540	-.0287	-.0206	-.0227
.950	-.0804	-.0692	-.0358	-.0308

BETA (5) = 1.000 ALPHA (1) = .000 Q(PSF) = 42.797 PO = 2115.0 RUN NO = 36.000

SECTION (1)MAIN LND GR DR-O DEPENDENT VARIABLE CP

Y/BML	.0380	.3100	.5820	.8530
X/CML				
.050	-.7744	-.6795	-.7199	-.4470
.230	-.1116	-.1793	-.1611	-.2247
.410	-.1126	-.0994	-.1176	-.1914
.590	-.1227	-.1227	-.1328	-.1510
.770	-.1378	-.1429	-.1520	-.1590
.950	-.1631	-.1732	-.1550	-.1469

BETA (5) = 1.000 ALPHA (2) = 2.050 Q(PSF) = 42.797 PO = 2115.0 RUN NO = 36.000

SECTION (1)MAIN LND GR DR-O DEPENDENT VARIABLE CP

Y/BML	.0380	.3100	.5820	.8530
X/CML				
.050	-.6667	-.6434	-.6535	-.4631
.230	-.0885	-.1219	-.1472	-.1573
.410	-.0925	-.0541	-.0693	-.1239
.590	-.0976	-.0824	-.0865	-.0925
.770	-.1108	-.1067	-.1067	-.1179
.950	-.1401	-.1391	-.1138	-.1077

OA163B MAIN GEAR DOOR OUTER SURFACE (RFPM01)

BETA (5) = 1.010 ALPHA (3) = 4.140 Q(PSF) = 42.797 PO = 2115.0 RUN NO = 36.000

SECTION (1)MAIN LND GR DR-O DEPENDENT VARIABLE CP

Y/BML	.0380	.3100	.5820	.8530
X/CML				
.050	-.5730	-.5932	-.5709	-.5243
.230	-.0683	-.0734	-.1271	-.1048
.410	-.0876	-.0146	-.0217	-.0531
.590	-.0815	-.0440	-.0379	-.0349
.770	-.0926	-.0673	-.0622	-.0663
.950	-.1180	-.1038	-.0724	-.0663

BETA (5) = 1.000 ALPHA (4) = 6.190 Q(PSF) = 42.797 PO = 2115.0 RUN NO = 36.000

SECTION (1)MAIN LND GR DR-O DEPENDENT VARIABLE CP

Y/BML	.0380	.3100	.5820	.8530
X/CML				
.050	-.4863	-.5431	-.4893	-.5735
.230	-.0450	-.0268	-.1150	-.0521
.410	-.0937	.0198	.0208	.0086
.590	-.0734	-.0055	.0086	.0208
.770	-.0734	-.0318	-.0237	-.0176
.950	-.0958	-.0704	-.0369	-.0318

BETA (6) = 1.990 ALPHA (1) = .020 Q(PSF) = 42.885 PO = 2115.0 RUN NO = 37.000

SECTION (1)MAIN LND GR DR-O DEPENDENT VARIABLE CP

Y/BML	.0380	.3100	.5820	.8530
X/CML				
.050	-.7386	-.6932	-.7265	-.4619
.230	-.1236	-.174.	-.1711	-.2105
.410	-.1287	-.0943	-.1145	-.1872
.590	-.1357	-.1226	-.1297	-.1499
.770	-.1499	-.1418	-.1468	-.1569
.950	-.1771	-.1731	-.1509	-.1458

OA163B MAIN GEAR DOOR OUTER SURFACE (RFPM04)

BETA (6) = 1.980 ALPHA (2) = 2.050 Q(PSF) = 42.885 PO = 2115.0 RUN NO = 37.000

SECTION (1)MAIN LND GR DR-O DEPENDENT VARIABLE CP

Y/BML	.0380	.3100	.5820	.8530
X/CML				
.050	-.6661	-.6510	-.6520	-.4833
.230	-.1034	-.1186	-.1620	-.1529
.410	-.1267	-.0580	-.0691	-.1236
.590	-.1236	-.0853	-.0832	-.0933
.770	-.1337	-.1065	-.1055	-.1085
.950	-.1570	-.1408	-.1115	-.1034

BETA (6) = 1.990 ALPHA (3) = 4.130 Q(PSF) = 42.885 PO = 2115.0 RUN NO = 37.000

SECTION (1)MAIN LND GR DR-O DEPENDENT VARIABLE CP

Y/BML	.0380	.3100	.5820	.8530
X/CML				
.050	-.5733	-.6066	-.5753	-.5652
.230	-.0861	-.0700	-.1477	-.1063
.410	-.1376	-.0196	-.0246	-.0569
.590	-.1144	-.0478	-.0377	-.0357
.770	-.1144	-.0730	-.0649	-.0599
.950	-.1376	-.1093	-.0771	-.0690

BETA (6) = 1.990 ALPHA (4) = 6.180 Q(PSF) = 42.885 PO = 2115.0 RUN NO = 37.000

SECTION (1)MAIN LND GR DR-O DEPENDENT VARIABLE CP

Y/BML	.0380	.3100	.5820	.8530
X/CML				
.050	-.4727	-.5537	-.4990	-.5882
.230	-.0744	-.0369	-.1240	-.0531
.410	-.1220	.0127	.0208	.0046
.590	-.0977	-.0095	.0066	.0188
.770	-.0946	-.0359	-.0227	-.0105
.950	-.1149	-.0744	-.0389	-.0359

OA163B MAIN GEAR DOOR OUTER SURFACE (RFPM04)

BETA (7) = 5.010 ALPHA (1) = .000 Q(PSF) = 42.840 PO = 2115.0 RUN NO = 38.000

SECTION (1)MAIN LND GR DR-O DEPENDENT VARIABLE CP

Y/BML	.0380	.3100	.5820	.8530
X/CML				
.050	-.7186	-.7217	-.7479	-.4291
.230	-.1769	-.1497	-.1911	-.1880
.410	-.2435	-.1003	-.1144	-.1709
.590	-.2143	-.1245	-.1275	-.1416
.770	-.2022	-.1436	-.1426	-.1386
.950	-.2193	-.1749	-.1447	-.1366

BETA (7) = 5.010 ALPHA (2) = 2.050 Q(PSF) = 42.840 PO = 2115.0 RUN NO = 38.000

SECTION (1)MAIN LND GR DR-O DEPENDENT VARIABLE CP

Y/BML	.0380	.3100	.5820	.8530
X/CML				
.050	-.6261	-.6767	-.6494	-.6029
.230	-.2097	-.1136	-.1935	-.1439
.410	-.2258	-.0671	-.0651	-.1136
.590	-.1955	-.0894	-.0792	-.0813
.770	-.1854	-.1106	-.1025	-.0873
.950	-.2046	-.1439	-.1106	-.1086

BETA (7) = 5.010 ALPHA (3) = 4.110 Q(PSF) = 42.840 PO = 2115.0 RUN NO = 38.000

SECTION (1)MAIN LND GR DR-O DEPENDENT VARIABLE CP

Y/BML	.0380	.3100	.5820	.8530
X/CML				
.050	-.5572	-.6312	-.5583	-.6656
.230	-.2545	-.1006	-.1928	-.1138
.410	-.2242	-.0358	-.0257	-.0541
.590	-.1897	-.0571	-.0348	-.0267
.770	-.1745	-.0784	-.0652	-.0399
.950	-.1897	-.1118	-.0773	-.0834

OA163B MAIN GEAR DOOR OUTER SURFACE (RFPM04)

BETA (7) = 5.010 ALPHA (4) = 6.200 Q(PSF) = 42.840 PO = 2115.0 RUN NO = 38.000

SECTION (1)MAIN LND GR DR-O DEPENDENT VARIABLE CP

Y/BML	.0380	.3100	.5820	.8530
X/CML				
.050	-.4803	-.5898	-.4732	-.6294
.230	-.3149	-.0805	-.1952	-.1323
.410	-.2419	-.0136	.0076	-.0045
.590	-.1962	-.0278	.0066	.0218
.770	-.1668	-.0481	-.0288	.0015
.950	-.1830	-.0856	-.0461	-.0582

OA1638 MAIN GEAR DOOR OUTER SURFACE (RFPM05) (27 APR 77)

REFERENCE DATA

SREF = 2690.0000 SQ.FT. XMRP = 1076.7000 IN. XO
LREF = 474.8100 INCHES YMRP = .0000 IN. YO
BREF = 936.6800 INCHES ZMRP = 375.0000 IN. ZO
SCALE = .0405

PARAMETRIC DATA

SPDBRK =	25.000	BDFLAP =	.000
ELV-L =	5.000	ELV-R =	5.000
PHI-N =	30.800	THETAN =	5.000
PHI-ML =	32.200	THETML =	5.000
PHI-MR =	32.200	THETMR =	5.000

BETA (1) = -5.050 ALPHA (1) = .050 Q(PSF) = 42.827 PO = 2115.0 RUN NO = 39.000

SECTION (1)MAIN LND GR DR-O DEPENDENT VARIABLE CP

Y/BML	.0380	.3100	.5820	.8530
X/CML				
.050	-.7089	-.6561	-.7942	-.1648
.230	-.1050	-.0978	-.1050	-.2014
.410	-.1283	-.1070	-.1202	-.1648
.590	-.1283	-.1232	-.1293	-.1232
.770	-.1425	-.1405	-.1506	-.1862
.950	-.1628	-.1709	-.1547	-.1506

BETA (1) = -5.050 ALPHA (2) = 2.120 Q(PSF) = 42.827 PO = 2115.0 RUN NO = 39.000

SECTION (1)MAIN LND GR DR-O DEPENDENT VARIABLE CP

Y/BML	.0380	.3100	.5820	.8530
X/CML				
.050	-.6895	-.5751	-.6662	-.1006
.230	-.0530	-.0571	-.0338	-.1421
.410	-.0803	-.0591	-.0641	-.1046
.590	-.0854	-.0793	-.0773	-.0662
.770	-.1006	-.0965	-.1036	-.1390
.950	-.1238	-.1279	-.1107	-.1066

BETA (1) = -5.050 ALPHA (3) = 4.190 Q(PSF) = 42.827 PO = 2115.0 RUN NO = 39.000

SECTION (1)MAIN LND GR DR-O DEPENDENT VARIABLE CP

Y/BML	.0380	.3100	.5820	.8530
X/CML				
.050	-.6452	-.5057	-.5613	-.1601
.230	-.0145	-.0206	.0177	-.0772
.410	-.0338	-.0135	-.0075	-.0358
.590	-.0418	-.0338	-.0257	-.0156
.770	-.0570	-.0560	-.0580	-.0883
.950	-.0813	-.0873	-.0691	-.0641

OA163B MAIN GEAR DOOR OUTER SURFACE (RFPM05)

BETA (1) = -5.050 ALPHA (4) = 6.270 Q(PSF) = 42.827 PO = 2115.0 RUN NO = 39.000

SECTION (1)MAIN LND GR DR-O DEPENDENT VARIABLE CP

Y/BML	.0380	.3100	.5820	.8530
X/CML				
.050	-.5338	-.4388	-.4610	-.3176
.230	.0258	.0207	.0328	-.0226
.410	.0157	.0389	.0470	.0318
.590	.0066	.0177	.0268	.0429
.770	-.0095	-.0065	-.0065	-.0337
.950	-.0358	-.0398	-.0176	-.0226

BETA (2) = -4.050 ALPHA (1) = .050 Q(PSF) = 42.862 PO = 2115.0 RUN NO = 40.000

SECTION (1)MAIN LND GR DR-O DEPENDENT VARIABLE CP

Y/BML	.0380	.3100	.5820	.8530
X/CML				
.050	-.7469	-.6350	-.7540	-.1628
.230	-.0882	-.1083	-.0892	-.1971
.410	-.1134	-.1033	-.1184	-.1709
.590	-.1194	-.1194	-.1265	-.1285
.770	-.1336	-.1356	-.1457	-.1749
.950	-.1558	-.1648	-.1487	-.1416

BETA (2) = -4.050 ALPHA (2) = 2.110 Q(PSF) = 42.862 PO = 2115.0 RUN NO = 40.000

SECTION (1)MAIN LND GR DR-O DEPENDENT VARIABLE CP

Y/BML	.0380	.3100	.5820	.8530
X/CML				
.050	-.7158	-.5735	-.6482	-.1689
.230	-.0519	-.0700	-.0357	-.1356
.410	-.0730	-.0589	-.0650	-.1114
.590	-.0791	-.0771	-.0781	-.0771
.770	-.0942	-.0983	-.1043	-.1265
.950	-.1184	-.1275	-.1084	-.1003

OA163B MAIN GEAR DOOR OUTER SURFACE (RFPM05)

BETA (2) = -4.050 ALPHA (3) = 4.190 Q(PSF) = 42.862 PO = 2115.0 RUN NO = 40.000

SECTION (1)MAIN LND GR DR-O DEPENDENT VARIABLE CP

Y/BML	.0380	.3100	.5820	.8530
X/CML				
.050	-.6411	-.5111	-.5548	-.2898
.230	-.0166	-.0349	-.0065	-.0837
.410	-.0268	-.0095	-.0075	-.0370
.590	-.0359	-.0309	-.0238	-.0136
.770	-.0522	-.0512	-.0552	-.0826
.950	-.0755	-.0837	-.0644	-.0634

BETA (2) = -4.050 ALPHA (4) = 6.240 Q(PSF) = 42.862 PO = 2115.0 RUN NO = 40.000

SECTION (1)MAIN LND GR DR-O DEPENDENT VARIABLE CP

Y/BML	.0380	.3100	.5820	.8530
X/CML				
.050	-.5364	-.4555	-.4575	-.3968
.230	.0177	.0076	.0015	-.0287
.410	.0147	.0410	.0450	.0308
.590	.0046	.0157	.0238	.0389
.770	-.0115	-.0125	-.0065	-.0287
.950	-.0358	-.0449	-.0206	-.0166

BETA (3) = -2.970 ALPHA (1) = .070 Q(PSF) = 42.822 PO = 2115.1 RUN NO = 41.000

SECTION (1)MAIN LND GR DR-O DEPENDENT VARIABLE CP

Y/BML	.0380	.3100	.5820	.8530
X/CML				
.050	-.7883	-.6430	-.7359	-.2022
.230	-.0882	-.1225	-.0862	-.1921
.410	-.1073	-.1003	-.1174	-.1759
.590	-.1184	-.1205	-.1295	-.1386
.770	-.1285	-.1366	-.1487	-.1638
.950	-.1527	-.1659	-.1517	-.1376

OA163B MAIN GEAR DOOR OUTER SURFACE (RFPM05)

BETA (3) = -2.970 ALPHA (2) = 2.110 Q(PSF) = 42.822 PO = 2115.1 RUN NO = 41.000

SECTION (1)MAIN LND GR DR-O DEPENDENT VARIABLE CP

Y/BML	.0380	.3100	.5820	.8530
X/CML				
.050	-.7313	-.5793	-.6401	-.2863
.230	-.0562	-.0886	-.0491	-.1413
.410	-.0673	-.0551	-.0592	-.1170
.590	-.0764	-.0744	-.0764	-.0785
.770	-.0906	-.0937	-.1038	-.1221
.950	-.1139	-.1251	-.1079	-.0977

BETA (3) = -2.960 ALPHA (3) = 4.190 Q(PSF) = 42.822 PO = 2115.1 RUN NO = 41.000

SECTION (1)MAIN LND GR DR-O DEPENDENT VARIABLE CP

Y/BML	.0380	.3100	.5820	.8530
X/CML				
.050	-.6358	-.5235	-.5487	-.4091
.230	-.0196	-.0469	-.0388	-.0854
.410	-.0237	-.0075	-.0055	-.0419
.590	-.0338	-.0287	-.0257	-.0176
.770	-.0480	-.0510	-.0540	-.0753
.950	-.0732	-.0834	-.0631	-.0591

BETA (3) = -2.970 ALPHA (4) = 6.260 Q(PSF) = 42.822 PO = 2115.1 RUN NO = 41.000

SECTION (1)MAIN LND GR DR-O DEPENDENT VARIABLE CP

Y/BML	.0380	.3100	.5820	.8530
X/CML				
.050	-.5205	-.4718	-.4617	-.4779
.230	.0137	-.0024	-.0288	-.0268
.410	.0167	.0431	.0411	.0238
.590	.0076	.0177	.0248	.0390
.770	-.0095	-.0085	-.0085	-.0227
.950	-.0328	-.0440	-.0186	-.0156

OA163B MAIN GEAR DOOR OUTER SURFACE (RFPM05)

BETA (4) = -2.030 ALPHA (1) = .030 Q(PSF) = 42.880 PO = 2115.0 RUN NO = 42.000

SECTION (1)MAIN LND GR DR-O DEPENDENT VARIABLE CP

Y/BML	.0380	.3100	.5820	.8530
X/CML				
.050	-.8039	-.6394	-.7171	-.2830
.230	-.0912	-.1387	-.0953	-.2023
.410	-.1034	-.0963	-.1104	-.1801
.590	-.1124	-.1165	-.1266	-.1427
.770	-.1246	-.1326	-.1458	-.1579
.950	-.1488	-.1609	-.1458	-.1316

BETA (4) = -2.030 ALPHA (2) = 2.120 Q(PSF) = 42.880 PO = 2115.0 RUN NO = 42.000

SECTION (1)MAIN LND GR DR-O DEPENDENT VARIABLE CP

Y/BML	.0380	.3100	.5820	.8530
X/CML				
.050	-.7257	-.5853	-.6227	-.3994
.230	-.0580	-.1004	-.0762	-.1469
.410	-.0620	-.0509	-.0570	-.1145
.590	-.0721	-.0721	-.0762	-.0802
.770	-.0853	-.0903	-.0984	-.1166
.950	-.1075	-.1216	-.1055	-.0964

BETA (4) = -2.030 ALPHA (3) = 4.170 Q(PSF) = 42.880 PO = 2115.0 RUN NO = 42.000

SECTION (1)MAIN LND GR DR-O DEPENDENT VARIABLE CP

Y/BML	.0380	.3100	.5820	.8530
X/CML				
.050	-.6276	-.5385	-.5445	-.4797
.230	-.0247	-.0602	-.0764	-.0926
.410	-.0247	-.0024	-.0075	-.0440
.590	-.0318	-.0257	-.0257	-.0207
.770	-.0450	-.0501	-.0511	-.0683
.950	-.0723	-.0815	-.0612	-.0521

OA163B MAIN GEAR DOOR OUTER SURFACE (RFPM05)

BETA (4) = -2.030 ALPHA (4) = 6.260 Q(PSF) = 42.810 PO = 2115.0 RUN NO = 42.000

SECTION (1)MAIN LND GR DR-O DEPENDENT VARIABLE CP

Y/BML	.0380	.3100	.5820	.8530
X/CML				
.050	-.5053	-.4800	-.4598	-.5285
.230	.0045	-.0065	-.0580	-.0277
.410	.0116	.0439	.0399	.0207
.590	.0076	.0157	.0237	.0348
.770	-.0085	-.0075	-.0044	-.0145
.950	-.0357	-.0448	-.0166	-.0105

BETA (5) = -1.040 ALPHA (1) = .050 Q(PSF) = 42.920 PO = 2115.1 RUN NO = 43.000

SECTION (1)MAIN LND GR DR-O DEPENDENT VARIABLE CP

Y/BML	.0380	.3100	.5820	.8530
X/CML				
.050	-.8098	-.6463	-.7068	-.3940
.230	-.0922	-.1558	-.1144	-.2133
.410	-.0983	-.0963	-.1094	-.1810
.590	-.1094	-.1144	-.1266	-.1427
.770	-.1205	-.1316	-.1427	-.1548
.950	-.1427	-.1599	-.1437	-.1306

BETA (5) = -1.040 ALPHA (2) = 2.120 Q(PSF) = 42.920 PO = 2115.1 RUN NO = 43.000

SECTION (1)MAIN LND GR DR-O DEPENDENT VARIABLE CP

Y/BML	.0380	.3100	.5820	.8530
X/CML				
.050	-.7169	-.5992	-.6173	-.4804
.230	-.0628	-.1151	-.1101	-.1524
.410	-.0618	-.0457	-.0557	-.1151
.590	-.0696	-.0698	-.0749	-.0829
.770	-.0829	-.0910	-.0950	-.1091
.950	-.1061	-.1202	-.1030	-.0920

OA163B MAIN GEAR DOOR OUTER SURFACE (RFPM05)

BETA (5) = -1.040 ALPHA (3) = 4.170 Q(PSF) = 42.920 PO = 2115.1 RUN NO = 43.000

SECTION (1)MAIN LND GR DR-O DEPENDENT VARIABLE CP

Y/BML	.0380	.3100	.5820	.8530
X/CML				
.050	-.6174	-.5466	-.5405	-.5273
.230	-.0348	-.0692	-.1026	-.0914
.410	-.0297	.0005	-.0075	-.0489
.590	-.0328	-.0277	-.0257	-.0227
.770	-.0479	-.0479	-.0469	-.0611
.950	-.0722	-.0823	-.0580	-.0489

BETA (5) = -1.040 ALPHA (4) = 6.250 Q(PSF) = 42.920 PO = 2115.1 RUN NO = 43.000

SECTION (1)MAIN LND GR DR-O DEPENDENT VARIABLE CP

Y/BML	.0380	.3100	.5820	.8530
X/CML				
.050	-.5075	-.4933	-.4548	-.5722
.230	-.0055	-.0156	-.0814	-.0348
.410	-.0055	.0420	.0410	.0157
.590	-.0075	.0157	.0248	.0339
.770	-.0206	-.0095	-.0024	-.0044
.950	-.0470	-.0449	-.0156	-.0065

BETA (6) = .000 ALPHA (1) = .040 Q(PSF) = 42.807 PO = 2115.1 RUN NO = 44.000

SECTION (1)MAIN LND GR DR-O DEPENDENT VARIABLE CP

Y/BML	.0380	.3100	.5820	.8530
X/CML				
.050	-.8055	-.6570	-.6964	-.4933
.230	-.0954	-.1701	-.1428	-.2166
.410	-.0964	-.0873	-.1065	-.1822
.590	-.1075	-.1095	-.1216	-.1428
.770	-.1176	-.1257	-.1378	-.1489
.950	-.1408	-.1560	-.1508	-.1277

OA163B MAIN GEAR DOOR OUTER SURFACE (RFPM05)

BETA (6) = .000 ALPHA (2) = 2.120 Q(PSF) = 42.807 PO = 2115.1 RUN NO = 44.000

SECTION (1)MAIN LND GR DR-O DEPENDENT VARIABLE CF

Y/BML	.0380	.3100	.5820	.8530
X/CML				
.050	-.7117	-.6063	-.6124	-.5252
.230	-.0693	-.1220	-.1382	-.1514
.410	-.0663	-.0409	-.0521	-.1149
.590	-.0713	-.0663	-.0744	-.0815
.770	-.0855	-.0875	-.0896	-.0997
.950	-.1078	-.1189	-.0997	-.0825

BETA (6) = .000 ALPHA (3) = 4.170 Q(PSF) = 42.807 PO = 2115.1 RUN NO = 44.000

SECTION (1)MAIN LND GR DR-O DEPENDENT VARIABLE CP

Y/BML	.0380	.3100	.5820	.8530
X/CML				
.050	-.6059	-.5563	-.5390	-.5806
.230	-.0460	-.0733	-.1270	-.0966
.410	-.0490	.0005	-.0075	-.0531
.590	-.0510	-.0267	-.0237	-.0247
.770	-.0612	-.0500	-.0439	-.0500
.950	-.0854	-.0824	-.0571	-.0460

BETA (6) = .000 ALPHA (4) = 6.260 Q(PSF) = 42.807 PO = 2115.1 RUN NO = 44.000

SECTION (1)MAIN LND GR DR-O DEPENDENT VARIABLE CP

Y/BML	.0380	.3100	.5820	.8530
X/CML				
.050	-.5052	-.5041	-.4575	-.6025
.230	-.0217	-.0328	-.1109	-.0409
.410	-.0551	.0380	.0411	.0127
.590	-.0409	.0137	.0238	.0340
.770	-.0430	-.0116	-.0034	.0015
.950	-.0653	-.0501	-.0166	-.0085

OA163B MAIN GEAR DOOR OUTER SURFACE (RFPM05)

BETA (7) = .980 ALPHA (1) = .070 Q(PSF) = 42.847 PO = 2115.1 RUN NO = 45.000

SECTION (1)MAIN LND GR DR-O DEPENDENT VARIABLE CP

Y/BML	.0380	.3100	.5820	.8530
X/CML				
.050	-.7909	-.6615	-.6878	-.5473
.230	-.1035	-.1702	-.1763	-.2097
.410	-.1005	-.0823	-.0995	-.1743
.590	-.1096	-.1065	-.1166	-.1339
.770	-.1207	-.1227	-.1328	-.1383
.950	-.1439	-.1541	-.1338	-.1217

BETA (7) = .980 ALPHA (2) = 2.120 Q(PSF) = 42.847 PO = 2115.1 RUN NO = 45.000

SECTION (1)MAIN LND GR DR-O DEPENDENT VARIABLE CP

Y/BML	.0380	.3100	.5820	.8530
X/CML				
.050	-.6997	-.6168	-.6148	-.5603
.230	-.0853	-.1257	-.1611	-.1530
.410	-.0893	-.0408	-.0550	-.1166
.590	-.0903	-.0681	-.0701	-.0823
.770	-.1015	-.0883	-.0883	-.0934
.950	-.1237	-.1196	-.0934	-.0792

BETA (7) = .980 ALPHA (3) = 4.170 Q(PSF) = 42.847 PO = 2115.1 RUN NO = 45.000

SECTION (1)MAIN LND GR DR-O DEPENDENT VARIABLE CP

Y/BML	.0380	.3100	.5820	.8530
X/CML				
.050	-.6052	-.5667	-.5373	-.6103
.230	-.0632	-.0764	-.1524	-.1017
.410	-.0956	-.0024	-.0065	-.0551
.590	-.0794	-.0278	-.0227	-.0247
.770	-.0825	-.0511	-.0419	-.0379
.950	-.1037	-.0855	-.0561	-.0460

OA163B MAIN GEAR DOOR OUTER SURFACE (RFPM05)

BETA (7) = .980 ALPHA (4) = 6.240 Q(PSF) = 42.847 PO = 2115.1 RUN NO = 45.000

SECTION (1)MAIN LND GR DR-O DEPENDENT VARIABLE CP

Y/BML	.0380	.3100	.5820	.8530
X/CML				
.050	-.5112	-.5102	-.4546	-.6063
.230	-.0459	-.0459	-.1319	-.0550
.410	-.0935	.0309	.0359	.0046
.590	-.0672	.0096	.0248	.0339
.770	-.0641	-.0146	-.0034	.0126
.950	-.0844	99.0000	-.0176	-.0156

BETA (8) = 1.970 ALPHA (1) = .060 Q(PSF) = 42.845 PO = 2115.1 RUN NO = 46.000

SECTION (1)MAIN LND GR DR-O DEPENDENT VARIABLE CP

Y/BML	.0380	.3100	.5820	.8530
X/CML				
.050	-.7794	-.6745	-.6886	-.5463
.230	-.1154	-.1740	-.1931	-.2083
.410	-.1265	-.0801	-.0983	-.1810
.590	-.1255	-.1074	-.1164	-.1417
.770	-.1366	-.1265	-.1296	-.1366
.950	-.1598	-.1528	-.1326	-.1164

BETA (8) = 1.970 ALPHA (2) = 2.100 Q(PSF) = 42.845 PO = 2115.1 RUN NO = 46.000

SECTION (1)MAIN LND GR DR-O DEPENDENT VARIABLE CP

Y/BML	.0380	.3100	.5820	.8530
X/CML				
.050	-.6988	-.6281	-.6190	-.5836
.230	-.0974	-.1298	-.1844	-.1550
.410	-.1328	-.0408	-.0530	-.1207
.590	-.1197	-.0681	-.0681	-.0813
.770	-.1207	-.0893	-.0863	-.0823
.950	-.1409	-.1207	-.0924	-.0782

OA163B MAIN GEAR DOOR OUTER SURFACE (RFPM05)

BETA (8) = 1.970 ALPHA (3) = 4.180 Q(PSF) = 42.845 PO = 2115.1 RUN NO = 46.000

SECTION (1)MAIN LND GR DR-O DEPENDENT VARIABLE CP

Y/BML	.0380	.3100	.5820	.8530
X/CML				
.050	-.6086	-.5792	-.5417	-.6309
.230	-.0866	-.0906	-.1666	-.1038
.410	-.1382	-.0075	-.0065	-.0582
.590	-.1099	-.0308	-.0217	-.0237
.770	-.1038	-.0531	-.0450	-.0268
.950	-.1220	-.0866	-.0541	-.0491

BETA (8) = 1.970 ALPHA (4) = 6.250 Q(PSF) = 42.845 PO = 2115.1 RUN NO = 46.000

SECTION (1)MAIN LND GR DR-O DEPENDENT VARIABLE CP

Y/BML	.0380	.3100	.5820	.8530
X/CML				
.050	-.5240	-.5190	-.4643	-.6162
.230	-.0966	-.0672	-.1493	-.0723
.410	-.1189	.0258	.0299	-.0024
.590	-.0946	.0046	.0228	.0319
.770	-.0885	-.0186	-.0034	.0228
.950	-.1067	-.0571	-.0207	-.0237

BETA (9) = 2.980 ALPHA (1) = .070 Q(PSF) = 42.930 PO = 2115.1 RUN NO = 47.000

SECTION (1)MAIN LND GR DR-O DEPENDENT VARIABLE CP

Y/BML	.0380	.3100	.5820	.8530
X/CML				
.050	-.7821	-.6802	-.6934	-.5310
.230	-.1315	-.1799	-.2031	-.2021
.410	-.1658	-.0821	-.0962	-.1830
.590	-.1557	-.1073	-.1144	-.1396
.770	-.1567	-.1255	-.1245	-.1265
.950	-.1759	-.1537	-.1285	-.1124

OA163B MAIN GEAR DOOR OUTER SURFACE (RFPM05)

BETA (9) = 2.990 ALPHA (2) = 2.100 Q(PSF) = 42.93(PO = 2115.1 RUN NO = 47.000

SECTION (1)MAIN LND GR DR-O DEPENDENT VARIABLE CP

Y/BML	.0380	.3100	.5820	.8530
X/CML				
.050	-.6946	-.6351	-.6220	-.5877
.230	-.1235	-.1346	-.1941	-.1558
.410	-.1780	-.0438	-.0509	-.1215
.590	-.1477	-.0710	-.0660	-.0821
.770	-.1407	-.0912	-.0842	-.0720
.950	-.1578	-.1215	-.0922	-.0842

BETA (9) = 2.990 ALPHA (3) = 4.190 Q(PSF) = 42.93(PO = 2115.1 RUN NO = 47.000

SECTION (1)MAIN LND GR DR-O DEPENDENT VARIABLE CP

Y/BML	.0380	.3100	.5820	.8530
X/CML				
.050	-.6041	-.5859	-.5445	-.6303
.230	-.1326	-.0983	-.1690	-.1094
.410	-.1649	-.0115	-.0075	-.0640
.590	-.1347	-.0367	-.0236	-.0226
.770	-.1256	-.0589	-.0448	-.0176
.950	-.1427	-.0902	-.0579	-.0589

BETA (9) = 2.990 ALPHA (4) = 6.260 Q(PSF) = 42.93(PO = 2115.1 RUN NO = 47.000

SECTION (1)MAIN LND GR DR-O DEPENDENT VARIABLE CP

Y/BML	.0380	.3100	.5820	.8530
X/CML				
.050	-.5503	-.5270	-.4553	-.6140
.230	-.1712	-.0894	-.1773	-.0954
.410	-.1631	.0147	.0248	-.0115
.590	-.1328	-.0014	.0227	.0349
.770	-.1166	-.0247	-.0034	.0288
.950	-.1288	-.0590	-.0216	-.0338

OA163B MAIN GEAR DOOR OUTER SURFACE (RFPM05)

BETA (10) = 4.050 ALPHA (1) = .040 Q(PSF) = 42.912 PO = 2115.1 RUN NO = 48.000

SECTION (1)MAIN LND GR DR-O DEPENDENT VARIABLE (P

Y/BML	.0380	.3100	.5820	.8530
X/CML				
.050	-.7669	-.6914	-.6914	-.5436
.230	-.1533	-.1754	-.2237	-.2036
.410	-.2116	-.0809	-.0919	-.1794
.590	-.1845	-.1080	-.1090	-.1382
.770	-.1754	-.1251	-.1231	-.1151
.950	-.1905	-.1533	-.1251	-.1141

BETA (10) = 4.040 ALPHA (2) = 2.100 Q(PSF) = 42.912 PO = 2115.1 RUN NO = 48.000

SECTION (1)MAIN LND GR DR-O DEPENDENT VARIABLE (P

Y/BML	.0380	.3100	.5820	.8530
X/CML				
.050	-.6978	-.6462	-.6280	-.5917
.230	-.1662	-.1348	-.1975	-.1530
.410	-.2056	-.0459	-.0519	-.1207
.590	-.1732	-.0732	-.0671	-.0813
.770	-.1591	-.0934	-.0843	-.0810
.950	-.1742	-.1247	-.0914	-.0893

BETA (10) = 4.050 ALPHA (3) = 4.190 Q(PSF) = 42.912 PO = 2115.1 RUN NO = 48.000

SECTION (1)MAIN LND GR DR-O DEPENDENT VARIABLE (P

Y/BML	.0380	.3100	.5820	.8530
X/CML				
.050	-.6214	-.5921	-.5436	-.6781
.230	-.2067	-.1218	-.1966	-.1187
.410	-.1987	-.0186	-.0115	-.0661
.590	-.1673	-.0409	-.0206	-.0196
.770	-.1491	-.0611	-.0439	-.0115
.950	-.1643	-.0924	-.0570	-.0651

OA163B MAIN GEAR DOOR OUTER SURFACE (RFPM05)

BETA (10) = 4.050 ALPHA (4) = 6.250 Q(PSF) = 42.912 PO = 2115.1 RUN NO = 48.000

SECTION (1)MAIN LND GR DR-O DEPENDENT VARIABLE CP

Y/BML	.0380	.3100	.5820	.8530
X/CML				
.050	-.5994	-.5185	-.4345	-.6024
.230	-.2645	-.1380	-.2139	-.1400
.410	-.2200	.0086	.0137	-.0196
.590	-.1714	-.0065	.0258	.0329
.770	-.1431	-.0267	-.0034	.0288
.950	-.1552	-.0621	-.0247	-.0409

BETA (11) = 5.000 ALPHA (1) = .060 Q(PSF) = 42.847 PO = 2115.1 RUN NO = 49.000

SECTION (1)MAIN LND GR DR-O DEPENDENT VARIABLE CP

Y/BML	.0380	.3100	.5820	.8530
X/CML				
.050	-.7623	-.6968	-.7049	-.5124
.230	-.1909	-.1667	-.2141	-.1969
.410	-.2403	-.0851	-.0931	-.1758
.590	-.2080	-.1102	-.1072	-.1324
.770	-.1899	-.1254	-.1223	-.1052
.950	-.2060	-.1546	-.1244	-.1223

BETA (11) = 5.000 ALPHA (2) = 2.130 Q(PSF) = 42.847 PO = 2115.1 RUN NO = 49.000

SECTION (1)MAIN LND GR DR-O DEPENDENT VARIABLE CP

Y/BML	.0380	.3100	.5820	.8530
X/CML				
.050	-.6921	-.6508	-.6095	-.6911
.230	-.2364	-.1517	-.2243	-.1577
.410	-.2323	-.0508	-.0488	-.1204
.590	-.1990	-.0770	-.0629	-.0750
.770	-.1799	-.0962	-.0831	-.0538
.950	-.1950	-.1254	-.0932	-.0982

OA163B MAIN GEAR DOOR OUTER SURFACE (RFPM05)

BETA (11) = 5.000 ALPHA (3) = 4.190 Q(PSF) = 42.8+7 PO = 2115.1 RUN NO = 49.000

SECTION (1)MAIN LND GR DR-O DEPENDENT VARIABLE C_P

Y/BML	.0380	.3100	.5820	.8530
X/CML				
.050	-.6641	-.6032	-.5271	-.6946
.230	-.3069	-.1587	-.2440	-.1496
.410	-.2521	-.0278	-.0187	-.0674
.590	-.2054	-.0440	-.0177	-.0156
.770	-.1780	-.0643	-.0440	-.0085
.950	-.1892	-.0988	-.0603	-.0725

BETA (11) = 5.000 ALPHA (4) = 6.250 Q(PSF) = 42.8+7 PO = 2115.1 RUN NO = 49.000

SECTION (1)MAIN LND GR DR-O DEPENDENT VARIABLE C_P

Y/BML	.0380	.3100	.5820	.8530
X/CML				
.050	-.6336	-.5362	-.4144	-.5666
.230	-.3900	-.1638	-.2602	-.1942
.410	-.2815	-.0126	-.0075	-.0390
.590	-.2165	-.0156	.0228	.0239
.770	-.1790	-.0339	-.0055	.0310
.950	-.1861	-.0664	-.0298	-.0450

OA163B MAIN GEAR DOOR OUTER SURFACE (RFPM06) (27 APR 77)

REFERENCE DATA

SREF = 2690.0000 SQ.FT. XMRP = 1076.7000 IN. XO
LREF = 474.8100 INCHES YMRP = .0000 IN. YO
BREF = 936.6800 INCHES ZMRP = 375.0000 IN. ZO
SCALE = .0405

PARAMETRIC DATA

SPDBRK =	25.000	BDFLAP =	16.300
ELV-L =	.000	ELV-R =	.000
PHI-N =	30.800	THETAN =	5.000
PHI-ML =	32.200	THETML =	5.000
PHI-MR =	32.200	THETMR =	5.000

BETA (1) = -5.030 ALPHA (1) = .010 Q(PSF) = 42.822 PO = 2119.9 RUN NO = 51.000

SECTION (1)MAIN LND GR DR-O DEPENDENT VARIABLE CP

Y/BML	.0380	.3100	.5820	.8530
X/CML				
.050	-.7224	-.6678	-.8134	-.1794
.230	-.1136	-.1056	-.1147	-.2127
.410	-.1359	-.1177	-.1329	-.1763
.590	-.1399	-.1359	-.1369	-.1318
.770	-.1521	-.1511	-.1622	-.1966
.950	-.1753	-.1824	-.1652	-.1612

BETA (1) = -5.030 ALPHA (2) = 2.100 Q(PSF) = 42.822 PO = 2119.9 RUN NO = 51.000

SECTION (1)MAIN LND GR DR-O DEPENDENT VARIABLE CP

Y/BML	.0380	.3100	.5820	.8530
X/CML				
.050	-.7071	-.5888	-.6798	-.1106
.230	-.0601	-.0671	-.0419	-.1480
.410	-.0884	-.0702	-.0752	-.1116
.590	-.0944	-.0874	-.0843	-.0772
.770	-.1096	-.1076	-.1136	-.1480
.950	-.1308	-.1409	-.1197	-.1157

BETA (1) = -5.030 ALPHA (3) = 4.140 Q(PSF) = 42.822 PO = 2119.9 RUN NO = 51.000

SECTION (1)MAIN LND GR DR-O DEPENDENT VARIABLE CP

Y/BML	.0380	.3100	.5820	.8530
X/CML				
.050	-.6568	-.5170	-.5778	-.1615
.230	-.0217	-.0257	.0106	-.0845
.410	-.0429	-.0196	-.0186	-.0490
.590	-.0500	-.0419	-.0359	-.0247
.770	-.0652	-.0642	-.0683	-.0956
.950	-.0906	-.0976	-.0774	-.0733

OA163B MAIN GEAR DOOR OUTER SURFACE (RFPN06)

BETA (1) = -5.040 ALPHA (4) = 6.230 Q(PSF) = 42.832 PO = 2119.9 RUN NO = 51.000

SECTION (1)MAIN LND GR DR-O DEPENDENT VARIABLE CP

Y/BML	.0380	.3100	.5820	.8530
X/CML				
.050	-.5584	-.4602	-.4835	-.3224
.230	.0147	.0147	.0319	-.0298
.410	.0066	.0268	.0400	.0268
.590	-.0045	.0086	.0157	.0319
.770	-.0227	-.0207	-.0207	-.0450
.950	-.0460	-.0551	-.0298	-.0328

BETA (2) = -4.030 ALPHA (1) = .010 Q(PSF) = 42.700 PO = 2119.8 RUN NO = 52.000

SECTION (1)MAIN LND GR DR-O DEPENDENT VARIABLE CP

Y/BML	.0380	.3100	.5820	.8530
X/CML				
.050	-.7694	-.6539	-.7765	-.1757
.230	-.0997	-.1179	-.1017	-.2061
.410	-.1240	-.1149	-.1291	-.1828
.590	-.1331	-.1291	-.1352	-.1402
.770	-.1453	-.1493	-.1585	-.1858
.950	-.1676	-.1787	-.1615	-.1564

BETA (2) = -4.030 ALPHA (2) = 2.090 Q(PSF) = 42.780 PO = 2119.8 RUN NO = 52.000

SECTION (1)MAIN LND GR DR-O DEPENDENT VARIABLE CP

Y/BML	.0380	.3100	.5820	.8530
X/CML				
.050	-.7314	-.5885	-.6645	-.1728
.230	-.0592	-.0775	-.0389	-.1413
.410	-.0805	-.0653	-.0704	-.1221
.590	-.0886	-.0856	-.0866	-.0866
.770	-.1048	-.1048	-.1129	-.1373
.950	-.1261	-.1373	-.1190	-.1099

OA163B MAIN GEAR DOOR OUTER SURFACE (RFPM06)

BETA (2) = -4.030 ALPHA (3) = 4.140 Q(PSF) = 42.710 PO = 2119.8 RUN NO = 52.000

SECTION (1)MAIN LND GR DR-O DEPENDENT VARIABLE CP

Y/BML	.0380	.3100	.5820	.8530
X/CML				
.050	-.6556	-.5250	-.5634	-.2981
.230	-.0237	-.0339	-.0115	-.0875
.410	-.0358	-.0166	-.0166	-.0490
.590	-.0460	-.0379	-.0348	-.0267
.770	-.0612	-.0632	-.0662	-.0926
.950	-.0865	-.0966	-.0774	-.0713

BETA (2) = -4.030 ALPHA (4) = 6.240 Q(PSF) = 42.780 PO = 2119.8 RUN NO = 52.000

SECTION (1)MAIN LND GR DR-O DEPENDENT VARIABLE CP

Y/BML	.0380	.3100	.5820	.8530
X/CML				
.050	-.5450	-.4722	-.4833	-.4124
.230	.0106	.0046	-.0004	-.0368
.410	.0096	.0339	.0380	.0248
.590	-.0014	.0076	.0167	.0329
.770	-.0186	-.0196	-.0186	-.0419
.950	-.0429	-.0541	-.0318	-.0277

BETA (3) = -2.950 ALPHA (1) = .010 Q(PSF) = 42.832 PO = 2119.9 RUN NO = 53.000

SECTION (1)MAIN LND GR DR-O DEPENDENT VARIABLE CP

Y/BML	.0380	.3100	.5820	.8530
X/CML				
.050	-.7985	-.6530	-.7510	-.2095
.230	-.0964	-.1257	-.0944	-.2025
.410	-.1156	-.1095	-.1247	-.1873
.590	-.1267	-.1297	-.1378	-.1509
.770	-.1388	-.1489	-.1580	-.1762
.950	-.1620	-.1762	-.1610	-.1479

DATE 27 APR 77 OA163B PRESSURE DATA LISTING (RFPM06)

OA163B MAIN GEAR DOOR OUTER SURFACE

BETA (3) = -2.950 ALPHA (2) = 2.100 Q(PSF) = 42.832 PO = 2119.9 RUN NO = 53.000

SECTION (1)MAIN LND GR DR-O DEPENDENT VARIABLE CP

Y/BML	.0380	.3100	.5820	.8530
X/CML				
.050	-.7422	-.5896	-.6472	-.2854
.230	-.0621	-.0944	-.0550	-.1500
.410	-.0742	-.0621	-.0691	-.1247
.590	-.0823	-.0843	-.0863	-.0883
.770	-.0974	-.1035	-.1106	-.1288
.950	-.1217	-.1348	-.1176	-.1055

BETA (3) = -2.950 ALPHA (3) = 4.150 Q(PSF) = 42.832 PO = 2119.9 RUN NO = 53.000

SECTION (1)MAIN LND GR DR-O DEPENDENT VARIABLE CP

Y/BML	.0380	.3100	.5820	.8530
X/CML				
.050	-.6530	-.5354	-.5618	-.4189
.230	-.0278	-.0551	-.0440	-.0946
.410	-.0349	-.0146	-.0156	-.0501
.590	-.0430	-.0369	-.0349	-.0278
.770	-.0571	-.0612	-.0642	-.0865
.950	-.0825	-.0956	-.0734	-.0673

BETA (3) = -2.950 ALPHA (4) = 6.220 Q(PSF) = 42.832 PO = 2119.9 RUN NO = 53.000

SECTION (1)MAIN LND GR DR-O DEPENDENT VARIABLE CP

Y/BML	.0380	.3100	.5820	.8530
X/CML				
.050	-.5353	-.4867	-.4786	-.4897
.230	.0046	-.0055	-.0348	-.0379
.410	.0086	.0360	.0329	.0157
.590	-.0024	.0106	.0127	.0299
.770	-.0166	-.0166	-.0166	-.0348
.950	-.0430	-.0541	-.0318	-.0247

OA163B MAIN GEAR DOOR OUTER SURFACE (RFPM06)

BETA (4) = -2.020 ALPHA (1) = .040 Q(PSF) = 42 867 PO = 2119.8 RUN NO = 54.000

SECTION (1)MAIN LND GR DR-O DEPENDENT VARIABLE CP

Y/BML	.0380	.3100	.5820	.8530
X/CML				
.050	-.8156	-.6519	-.7307	-.2863
.230	-.0974	-.1428	-.0994	-.2145
.410	-.1115	-.1065	-.1196	-.1903
.590	-.1196	-.1246	-.1358	-.1509
.770	-.1337	-.1438	-.1560	-.1671
.950	-.1560	-.1731	-.1570	-.1408

BETA (4) = -2.020 ALPHA (2) = 2.090 Q(PSF) = 42 867 PO = 2119.8 RUN NO = 54.000

SECTION (1)MAIN LND GR DR-O DEPENDENT VARIABLE CP

Y/BML	.0380	.3100	.5820	.8530
X/CML				
.050	-.7353	-.5986	-.6361	-.4083
.230	-.0642	-.1087	-.0834	-.1553
.410	-.0713	-.0581	-.0662	-.1249
.590	-.0794	-.0824	-.0854	-.0895
.770	-.0915	-.1016	-.1117	-.1259
.950	-.1168	-.1310	-.1158	-.1047

BETA (4) = -2.020 ALPHA (3) = 4.150 Q(PSF) = 42.867 PO = 2119.8 RUN NO = 54.000

SECTION (1)MAIN LND GR DR-O DEPENDENT VARIABLE CP

Y/BML	.0380	.3100	.5820	.8530
X/CML				
.050	-.6362	-.5441	-.5542	-.4874
.230	-.0308	-.0622	-.0733	-.0986
.410	-.0298	-.0085	-.0146	-.0520
.590	-.0409	-.0328	-.0338	-.0287
.770	-.0520	-.0591	-.0622	-.0784
.950	-.0794	-.0935	-.0703	-.0822

OA163B MAIN GEAR DOOR OUTER SURFACE (RFPM06)

BETA (4) = -2.020 ALPHA (4) = 5.220 Q(PSF) = 42.867 PO = 2119.8 RUN NO = 54.000

SECTION (1)MAIN LND GR DR-O DEPENDENT VARIABLE CP

Y/BML	.0380	.3100	.5820	.8530
X/CML				
.050	-.5190	-.4908	-.4746	-.5321
.230	-.0014	-.0145	-.0670	-.0377
.410	.0045	.0348	.0338	.0126
.590	-.0034	.0096	.0136	.0247
.770	-.0165	-.0186	-.0155	-.0266
.950	-.0438	-.0549	-.0287	-.0236

BETA (5) = -1.020 ALPHA (1) = .030 Q(PSF) = 42.815 PO = 2119.8 RUN NO = 55.000

SECTION (1)MAIN LND GR DR-O DEPENDENT VARIABLE CP

Y/BML	.0380	.3100	.5820	.8530
X/CML				
.050	-.8191	-.6552	-.7129	-.3910
.230	-.0976	-.1573	-.1198	-.2241
.410	-.1046	-.1006	-.1148	-.1917
.590	-.1148	-.1208	-.1330	-.1512
.770	-.1279	-.1390	-.1492	-.1633
.950	-.1522	-.1684	-.1532	-.1360

BETA (5) = -1.020 ALPHA (2) = 2.100 Q(PSF) = 42.815 PO = 2119.8 RUN NO = 55.000

SECTION (1)MAIN LND GR DR-O DEPENDENT VARIABLE CP

Y/BML	.0380	.3100	.5820	.8530
X/CML				
.050	-.7317	-.6063	-.6305	-.4940
.230	-.0661	-.1248	-.1137	-.1602
.410	-.0682	-.0530	-.0631	-.1228
.590	-.0783	-.0783	-.0823	-.0894
.770	-.0894	-.0995	-.1056	-.1177
.950	-.1147	-.1309	-.1137	-.1005

OA163B MAIN GEAR DOOR OUTER SURFACE (RFPM06)

BETA (5) = -1.020 ALPHA (3) = 4.150 Q(PSF) = 42.815 PO = 2119.8 RUN NO = 55.000

SECTION (1)MAIN LND GR DR-O DEPENDENT VARIABLE CP

Y/BML	.0380	.3100	.5820	.8530
X/CML				
.050	-.6273	-.5574	-.5533	-.5462
.230	-.0389	-.0703	-.1077	-.1017
.410	-.0338	-.0075	-.0156	-.0541
.590	-.0419	-.0348	-.0328	-.0318
.770	-.0551	-.0571	-.0571	-.0703
.950	-.0794	-.0905	-.0672	-.0561

BETA (5) = -1.020 ALPHA (4) = 6.240 Q(PSF) = 42.815 PO = 2119.8 RUN NO = 55.000

SECTION (1)MAIN LND GR DR-O DEPENDENT VARIABLE CP

Y/BML	.0380	.3100	.5820	.8530
X/CML				
.050	-.5119	-.5068	-.4683	-.5848
.230	-.0146	-.0207	-.0885	-.0419
.410	-.0126	.0349	.0309	.0086
.590	-.0146	.0066	.0147	.0238
.770	-.0298	-.0207	-.0126	-.0166
.950	-.0551	-.0551	-.0288	-.0176

BETA (6) = .000 ALPHA (1) = .010 Q(PSF) = 42.787 PO = 2119.8 RUN NO = 56.000

SECTION (1)MAIN LND GR DR-O DEPENDENT VARIABLE CP

Y/BML	.0380	.3100	.5820	.8530
X/CML				
.050	-.8136	-.6651	-.7005	-.4944
.230	-.1004	-.1782	-.1499	-.2257
.410	-.1024	-.0964	-.1095	-.1903
.590	-.1146	-.1186	-.1307	-.1489
.770	-.1247	-.1368	-.1469	-.1570
.950	-.1499	-.1661	-.1499	-.1358

OA163B MAIN GEAR DOOR OUTER SURFACE (RFPM06)

BETA (6) = .000 ALPHA (2) = 2.100 Q(PSF) = 42.787 PO = 2119.8 RUN NO = 56.000

SECTION (1)MAIN LND GR DR-O DEPENDENT VARIABLE CP

Y/BML	.0380	.3100	.5820	.8530
X/CML				
.050	-.7280	-.6218	-.6299	-.5388
.230	-.0783	-.1299	-.1441	-.1643
.410	-.0743	-.0500	-.0642	-.1249
.590	-.0803	-.0773	-.0834	-.0915
.770	-.0935	-.0976	-.1026	-.1127
.950	-.1208	-.1289	-.1077	-.0945

BETA (6) = .000 ALPHA (3) = 4.160 Q(PSF) = 42.787 PO = 2119.8 RUN NO = 56.000

SECTION (1)MAIN LND GR DR-O DEPENDENT VARIABLE CP

Y/BML	.0380	.3100	.5820	.8530
X/CML				
.050	-.6209	-.5712	-.5530	-.5824
.230	-.0521	-.0764	-.1302	-.1028
.410	-.0552	-.0075	-.0136	-.0572
.590	-.0552	-.0349	-.0318	-.0328
.770	-.0683	-.0582	-.0552	-.0582
.950	-.0937	-.0937	-.0653	-.0541

BETA (6) = .000 ALPHA (4) = 6.220 Q(PSF) = 42.787 PO = 2119.8 RUN NO = 56.000

SECTION (1)MAIN LND GR DR-O DEPENDENT VARIABLE CP

Y/BML	.0380	.3100	.5820	.8530
X/CML				
.050	-.5233	-.5202	-.4715	-.6065
.230	-.0288	-.0380	-.1131	-.0552
.410	-.0562	.0310	.0320	.0036
.590	-.0451	.0036	.0147	.0239
.770	-.0522	-.0217	-.0136	-.0106
.950	-.0765	-.0593	-.0298	-.0217

OA1639 MAIN GEAR DOOR OUTER SURFACE (RFPM06)

BETA (7) = 1.000 ALPHA (1) = .020 Q(PSF) = 42.347 PO = 2119.9 RUN NO = 57.000

SECTION (1)MAIN LND GR DR-O DEPENDENT VARIABLE CP

Y/BML	.0380	.3100	.5820	.8530
X/CML				
.050	-.8067	-.6826	-.7038	-.5575
.230	-.1104	-.1821	-.1790	-.2265
.410	-.1104	-.0922	-.1094	-.1911
.590	-.1175	-.1165	-.1306	-.1518
.770	-.1306	-.1346	-.1447	-.1538
.950	-.1548	-.1669	-.1477	-.1346

BETA (7) = 1.000 ALPHA (2) = 2.080 Q(PSF) = 42.347 PO = 2119.9 RUN NO = 57.000

SECTION (1)MAIN LND GR DR-O DEPENDENT VARIABLE CP

Y/BML	.0380	.3100	.5820	.8530
X/CML				
.050	-.7131	-.6272	-.6312	-.5635
.230	-.0894	-.1328	-.1632	-.1601
.410	-.0944	-.0489	-.0590	-.1278
.590	-.0944	-.0762	-.0782	-.0904
.770	-.1076	-.0964	-.0954	-.1035
.950	-.1318	-.1288	-.1045	-.0894

BETA (7) = 1.000 ALPHA (3) = 4.150 Q(PSF) = 42.347 PO = 2119.9 RUN NO = 57.000

SECTION (1)MAIN LND GR DR-O DEPENDENT VARIABLE CP

Y/BML	.0380	.3100	.5820	.8530
X/CML				
.050	-.6100	-.5806	-.5533	-.6160
.230	-.0681	-.0823	-.1571	-.1106
.410	-.0985	-.0105	-.0176	-.0631
.590	-.0894	-.0368	-.0307	-.0348
.770	-.0924	-.0580	-.0540	-.0509
.950	-.1146	-.0964	-.0661	-.0540

DATE 27 APR 77 OA163B PRESSURE DATA LISTING

OA163B MAIN GEAR DOOR OUTER SURFACE (RFPM06)

BETA (7) = 1.000 ALPHA (4) = 6.240 Q(PSF) = 42.847 PO = 2119.9 RUN NO = 57.000

SECTION (1)MAIN LND GR DR-O DEPENDENT VARIABLE CP

Y/BML	.0380	.3100	.5820	.8530
X/CML				
.050	-.5311	-.5280	-.4681	-.6234
.230	-.0521	-.0532	-.1323	-.0653
.410	-.1029	.0259	.0289	-.0034
.590	-.0765	.0015	.0157	.0238
.770	-.0724	-.0258	-.0126	.0025
.950	-.0937	-.0623	-.0258	-.0248

BETA (8) = 1.980 ALPHA (1) = .010 Q(PSF) = 42.860 PO = 2119.9 RUN NO = 58.000

SECTION (1)MAIN LND GR DR-O DEPENDENT VARIABLE CP

Y/BML	.0380	.3100	.5820	.8530
X/CML				
.050	-.7934	-.6875	-.7016	-.5624
.230	-.1225	-.1840	-.1961	-.2173
.410	-.1306	-.0892	-.1063	-.1931
.590	-.1336	-.1154	-.1245	-.1497
.770	-.1447	-.1316	-.1406	-.1477
.950	-.1689	-.1628	-.1427	-.1275

BETA (8) = 1.980 ALPHA (2) = 2.110 Q(PSF) = 42.860 PO = 2119.9 RUN NO = 58.000

SECTION (1)MAIN LND GR DR-O DEPENDENT VARIABLE CP

Y/BML	.0380	.3100	.5820	.8530
X/CML				
.050	-.7096	-.6407	-.6275	-.5941
.230	-.1048	-.1341	-.1858	-.1635
.410	-.1362	-.0490	-.0612	-.1270
.590	-.1260	-.0744	-.0774	-.0906
.770	-.1301	-.0987	-.0956	-.0946
.950	-.1514	-.1301	-.1017	-.0875

OA163B MAIN GEAR DOOR OUTER SURFACE (RFPM06)

BETA (9) = 1.980 ALPHA (3) = 4.160 Q(PSF) = 42.860 PO = 2119.9 RUN NO = 58.000

SECTION (1)MAIN LND GR DR-O DEPENDENT VARIABLE CP

Y/BML	.0380	.3100	.5820	.8530
X/CML				
.050	-.6235	-.5922	-.5567	-.6336
.230	-.0925	-.0975	-.1673	-.1157
.410	-.1461	-.0125	-.0166	-.0672
.590	-.1177	-.0409	-.0307	-.0348
.770	-.1096	-.0641	-.0530	-.0358
.950	-.1329	-.0965	-.0662	-.0601

BETA (8) = 1.980 ALPHA (4) = 6.240 Q(PSF) = 42.860 PO = 2119.9 RUN NO = 58.000

SECTION (1)MAIN LND GR DR-O DEPENDENT VARIABLE CP

Y/BML	.0380	.3100	.5820	.8530
X/CML				
.050	-.5382	-.5301	-.4715	-.6271
.230	-.0974	-.0621	-.1520	-.0792
.410	-.1268	.0197	.0238	-.0085
.590	-.0985	-.0034	.0147	.0238
.770	-.0964	-.0297	-.0105	.0137
.950	-.1126	-.0661	-.0287	-.0338

BETA (9) = 2.980 ALPHA (1) = .010 Q(PSF) = 42.877 PO = 2119.9 RUN NO = 59.000

SECTION (1)MAIN LND GR DR-O DEPENDENT VARIABLE CP

Y/BML	.0380	.3100	.5820	.8530
X/CML				
.050	-.7953	-.6963	-.7124	-.5347
.230	-.1388	-.1842	-.2125	-.2145
.410	-.1701	-.0883	-.1075	-.1943
.590	-.1620	-.1176	-.1236	-.1519
.770	-.1670	-.1347	-.1367	-.1418
.950	-.1872	-.1660	-.1408	-.1216

OA163B MAIN GEAR DOOR OUTER SURFACE (RFPM06)

BETA (9) = 2.980 ALPHA (2) = 2.100 Q(PSF) = 42.877 PO = 2119.9 RUN NO = 59.000

SECTION (1)MAIN LND GR DR-C DEPENDENT VARIABLE CP

Y/BML	.0380	.3100	.5820	.8530
X/CML				
.050	-.7080	-.6474	-.6333	-.6040
.230	-.1286	-.1377	-.2013	-.1639
.410	-.1851	-.0519	-.0589	-.1316
.590	-.1558	-.0801	-.0761	-.0923
.770	-.1508	-.1003	-.0953	-.0832
.950	-.1690	-.1326	-.1003	-.0923

BETA (9) = 2.980 ALPHA (3) = 4.150 Q(PSF) = 42.877 PO = 2119.9 RUN NO = 59.000

SECTION (1)MAIN LND GR DR-C DEPENDENT VARIABLE CP

Y/BML	.0380	.3100	.5820	.8530
X/CML				
.050	-.6245	-.5992	-.5638	-.6377
.230	-.1370	-.1066	-.1774	-.1167
.410	-.1693	-.0206	-.0156	-.0722
.590	-.1420	-.0439	-.0318	-.0358
.770	-.1329	-.0662	-.0550	-.0277
.950	-.1501	-.1005	-.0692	-.0702

BETA (9) = 2.980 ALPHA (4) = 6.230 Q(PSF) = 42.877 PO = 2119.9 RUN NO = 59.000

SECTION (1)MAIN LND GR DR-C DEPENDENT VARIABLE CP

Y/BML	.0380	.3100	.5820	.8530
X/CML				
.050	-.5621	-.5388	-.4760	-.6329
.230	-.1724	-.0925	-.1755	-.1016
.410	-.1643	.0106	.0228	-.0166
.590	-.1350	-.0095	.0147	.0228
.770	-.1229	-.0318	-.0136	.0167
.950	-.1390	-.0702	-.0348	-.0419

OA163B MAIN GEAR DOOR OUTER SURFACE (RFPM06)

BETA (10) = 4.060 ALPHA (1) = .020 Q(PSF) = 42.825 PO = 2119.9 RUN NO = 60.000

SECTION (1)MAIN LND GR DR-O DEPENDENT VARIABLE CP

Y/BML	.0380	.3100	.5820	.6530
X/CML				
.050	-.7860	-.7033	-.7114	-.5450
.230	-.1587	-.1890	-.2334	-.2132
.410	-.2182	-.0902	-.1043	-.1880
.590	-.1930	-.1174	-.1204	-.1497
.770	-.1839	-.1335	-.1345	-.1305
.950	-.2021	-.1658	-.1365	-.1255

BETA (10) = 4.060 ALPHA (2) = 2.090 Q(PSF) = 42.825 PO = 2119.9 RUN NO = 60.000

SECTION (1)MAIN LND GR DR-O DEPENDENT VARIABLE CP

Y/BML	.0380	.3100	.5820	.8530
X/CML				
.050	-.7147	-.6610	-.6468	-.5880
.230	-.1706	-.1402	-.2061	-.1615
.410	-.2132	-.0581	-.0602	-.1321
.590	-.1818	-.0855	-.0784	-.0926
.770	-.1696	-.1048	-.0946	-.0744
.950	-.1868	-.1372	-.1027	-.1027

BETA (10) = 4.060 ALPHA (3) = 4.160 Q(PSF) = 42.825 PO = 2119.9 RUN NO = 60.000

SECTION (1)MAIN LND GR DR-O DEPENDENT VARIABLE CP

Y/BML	.0380	.3100	.5820	.8530
X/CML				
.050	-.6431	-.6097	-.5611	-.6826
.230	-.2079	-.1279	-.1968	-.1289
.410	-.2049	-.0267	-.0176	-.0733
.590	-.1735	-.0510	-.0318	-.0298
.770	-.1573	-.0702	-.0551	-.0217
.950	-.1735	-.1036	-.0713	-.0804

OA163B MAIN GEAR DOOR OUTER SURFACE (RFPM06)

BETA (10) = 4.060 ALPHA (4) = 6.230 Q(PSF) = 42.825 PO = 2119.9 RUN NO = 60.000

SECTION (1)MAIN LND GR DR-O DEPENDENT VARIABLE CP

Y/BML	.0380	.3100	.5820	.8530
X/CML				
.050	-.6171	-.5440	-.4588	-.6232
.230	-.2682	-.1363	-.2225	-.1454
.410	-.2266	-.0004	.0066	-.0268
.590	-.1759	-.0156	.0157	.0238
.770	-.1525	-.0389	-.0176	.0188
.950	-.1657	-.0744	-.0359	-.0531

BETA (11) = 5.010 ALPHA (1) = .050 Q(PSF) = 42.762 PO = 2119.9 RUN NO = 61.000

SECTION (1)MAIN LND GR DR-O DEPENDENT VARIABLE CP

Y/BML	.0380	.3100	.5820	.8530
X/CML				
.050	-.7892	-.7174	-.7225	-.5172
.230	-.1986	-.1754	-.2239	-.2077
.410	-.2542	-.0934	-.1036	-.1865
.590	-.2178	-.1197	-.1197	-.1460
.770	-.2016	-.1369	-.1319	-.1167
.950	-.2168	-.1663	-.1379	-.1339

BETA (11) = 5.010 ALPHA (2) = 2.090 Q(PSF) = 42.762 PO = 2119.9 RUN NO = 61.000

SECTION (1)MAIN LND GR DR-O DEPENDENT VARIABLE CP

Y/BML	.0380	.3100	.5820	.8530
X/CML				
.050	-.7200	-.6753	-.6356	-.6997
.230	-.2382	-.1518	-.2321	-.1661
.410	-.2413	-.0614	-.0594	-.1325
.590	-.2077	-.0878	-.0756	-.0848
.770	-.1935	-.107.	-.0939	-.0685
.950	-.2047	-.1366	-.1041	-.1092

DATE 27 APR 77 OA163B PRESSURE DATA LISTING

OA163B MAIN GEAR DOOR OUTER SURFACE (RFPM06)

BETA (11) = 5.010 ALPHA (3) = 4.160 Q(PSF) = 42 762 PO = 2119.9 RUN NO = 61.000

SECTION (1)MAIN LND GR DR-O DEPENDENT VARIABLE CP

Y/BML	.0380	.3100	.5820	.8530
X/CML				
.050	-.6669	-.6122	-.5463	-.7104
.230	-.3063	-.1604	-.2405	-.1544
.410	-.2556	-.0359	-.0247	-.0754
.590	-.2080	-.0531	-.0288	-.0288
.770	-.1847	-.0713	-.0551	-.0186
.950	-.1979	-.1068	-.0703	-.0845

BETA (11) = 5.010 ALPHA (4) = 6.250 Q(PSF) = 42 762 PO = 2119.9 RUN NO = 61.000

SECTION (1)MAIN LND GR DR-O DEPENDENT VARIABLE CP

Y/BML	.0380	.3100	.5820	.8530
X/CML				
.050	-.5469	-.5496	-.4229	-.5790
.230	-.3905	-.1686	-.2618	-.2000
.410	-.2872	-.0197	-.0126	-.0430
.590	-.2233	-.0247	.0127	.0157
.770	-.1868	-.0409	-.0166	.0177
.950	-.1970	-.0774	-.0379	-.0541

OA163B MAIN GEAR DOOR OUTER SURFACE (RFPM07) (27 APR 77)

REFERENCE DATA

SREF = 2690.0000 SQ.FT. XMRP = 1076.7000 IN. XO
LREF = 474.8100 INCHES YMRP = .0000 IN. YO
BREF = 936.6800 INCHES ZMRP = 375.0000 IN. ZO
SCALE = .0405

PARAMETRIC DATA

SPDBRK =	25.000	BDFLAP =	.000
ELV-L =	.000	ELV-R =	.000
PHI-N =	66.000	THETAN =	108.000
PHI-ML =	26.000	THETML =	4.000
PHI-MR =	26.000	THETMR =	4.000

BETA (1) = -5.050 ALPHA (1) = .000 Q(PSF) = 42.770 PO = 2117.8 RUN NO = 62.000

SECTION (1)MAIN LND GR DR-O DEPENDENT VARIABLE CP

Y/BML	.0380	.3100	.5820	.8530
X/CML				
.050	-.7268	-.6772	-.8411	-.2250
.230	-.1248	-.1329	-.1279	-.2149
.410	-.1339	-.1228	-.1410	-.1704
.590	-.1491	-.1451	-.1471	-.1481
.770	-.1663	-.1643	-.1754	-.2048
.950	-.1886	-.1946	-.1774	-.1825

BETA (1) = -5.050 ALPHA (2) = 2.170 Q(PSF) = 42.770 PO = 2117.8 RUN NO = 62.000

SECTION (1)MAIN LND GR DR-O DEPENDENT VARIABLE CP

Y/BML	.0380	.3100	.5820	.8530
X/CML				
.050	-.7111	-.6045	-.7212	-.1415
.230	-.0705	-.0918	-.0552	-.1588
.410	-.0877	-.0765	-.0816	-.1080
.590	-.1060	-.0979	-.0958	-.0887
.770	-.1222	-.1202	-.1263	-.1537
.950	-.1466	-.1537	-.1334	-.1385

BETA (1) = -5.050 ALPHA (3) = 4.130 Q(PSF) = 42.770 PO = 2117.8 RUN NO = 62.000

SECTION (1)MAIN LND GR DR-O DEPENDENT VARIABLE CP

Y/BML	.0380	.3100	.5820	.8530
X/CML				
.050	-.6642	-.5387	-.6116	-.1583
.230	-.0318	-.0449	-.0014	-.0965
.410	-.0439	-.0277	-.0257	-.0429
.590	-.0621	-.0510	-.0449	-.0328
.770	-.0803	-.0763	-.0803	-.1036
.950	-.1046	-.1107	-.0884	-.0945

OA163B MAIN GEAR DOOR OUTER SURFACE (RFPM07)

BETA (1) = -5.050 ALPHA (4) = 6.190 Q(PSF) = 42.770 PO = 2117.8 RUN NO = 62.000

SECTION (1)MAIN LND GR DR-O DEPENDENT VARIABLE CP

Y/BML	.0380	.3100	.5820	.8530
X/CML				
.050	-.5918	-.4792	-.5188	-.2581
.230	.0066	-.0014	.0320	-.0450
.410	.0005	.0178	.0289	.0259
.590	-.0166	-.0045	.0056	.0249
.770	-.0369	-.0329	-.0339	-.0542
.950	-.0603	-.0663	-.0471	-.0572

BETA (2) = -2.020 ALPHA (1) = .000 Q(PSF) = 42.842 PO = 2117.8 RUN NO = 63.000

SECTION (1)MAIN LND GR DR-O DEPENDENT VARIABLE CP

Y/BML	.0380	.3100	.5820	.8530
X/CML				
.050	-.8106	-.6672	-.7581	-.2701
.230	-.1095	-.1590	-.1115	-.2297
.410	-.1125	-.1115	-.1277	-.1974
.590	-.1307	-.1348	-.1418	-.1540
.770	-.1439	-.1519	-.1630	-.1742
.950	-.1671	-.1812	-.1661	-.1590

BETA (2) = -2.030 ALPHA (2) = 2.070 Q(PSF) = 42.842 PO = 2117.8 RUN NO = 63.000

SECTION (1)MAIN LND GR DR-O DEPENDENT VARIABLE CP

Y/BML	.0380	.3100	.5820	.8530
X/CML				
.050	-.7462	-.6113	-.6721	-.3292
.230	-.0755	-.1222	-.0795	-.1719
.410	-.0735	-.0674	-.0735	-.1303
.590	-.0917	-.0907	-.0927	-.0927
.770	-.1080	-.1130	-.1191	-.1313
.950	-.1333	-.1435	-.1242	-.1191

OA163B MAIN GEAR DOOR OUTER SURFACE (RFPM07)

BETA (2) = -2.020 ALPHA (3) = 4.120 Q(PSF) = 42.842 PO = 2117.8 RUN NO = 63.000

SECTION (1)MAIN LND GR DR-O DEPENDENT VARIABLE CP

Y/BML	.0380	.3100	.5820	.8530
X/CML				
.050	-.6287	-.5649	-.5852	-.4071
.230	-.0368	-.0732	-.0722	-.1127
.410	-.0338	-.0186	-.0227	-.0520
.590	-.0500	-.0459	-.0429	-.0348
.770	-.0672	-.0712	-.0743	-.0864
.950	-.0935	-.1046	-.0834	-.0823

BETA (2) = -2.030 ALPHA (4) = 6.190 Q(PSF) = 42.842 PO = 2117.8 RUN NO = 63.000

SECTION (1)MAIN LND GR DR-O DEPENDENT VARIABLE CP

Y/BML	.0380	.3100	.5820	.8530
X/CML				
.050	-.5164	-.5143	-.5032	-.4467
.230	-.0075	-.0125	-.0549	-.0489
.410	.0025	.0258	.0258	.0126
.590	-.0125	-.0014	.0056	.0197
.770	-.0287	-.0297	-.0256	-.0347
.950	-.0549	-.0650	-.0408	-.0398

BETA (3) = -1.030 ALPHA (1) = .000 Q(PSF) = 42.870 PO = 2117.8 RUN NO = 64.000

SECTION (1)MAIN LND GR DR-O DEPENDENT VARIABLE CP

Y/BML	.0380	.3100	.5820	.8530
X/CML				
.050	-.6698	-.6737	-.7433	-.3441
.230	-.1113	-.1677	-.1254	-.2373
.410	-.1103	-.1093	-.1254	-.2000
.590	-.1274	-.1324	-.1415	-.1546
.770	-.1425	-.1506	-.1627	-.1697
.950	-.1667	-.1778	-.1637	-.1546

OA163B MAIN GEAR DOOR OUTER SURFACE (RFPM07)

BETA (3) = -1.030 ALPHA (2) = 2.080 Q(PSF) = 42.870 PO = 2117.8 RUN NO = 64.000

SECTION (1)MAIN LND GR DR-O DEPENDENT VARIABLE CP

Y/BML	.0380	.3100	.5820	.8530
X/CML				
.050	-.7159	-.6200	-.6533	-.3649
.230	-.0731	-.1286	-.1013	-.1760
.410	-.0690	-.0630	-.0710	-.1265
.590	-.0882	-.0852	-.0922	-.0953
.770	-.1013	-.1084	-.1144	-.1235
.950	-.1265	-.1407	-.1205	-.1154

BETA (3) = -1.030 ALPHA (3) = 4.120 Q(PSF) = 42.870 PO = 2117.8 RUN NO = 64.000

SECTION (1)MAIN LND GR DR-O DEPENDENT VARIABLE CP

Y/BML	.0380	.3100	.5820	.8530
X/CML				
.050	-.6081	-.5767	-.5828	-.4428
.230	-.0430	-.0765	-.0948	-.1090
.410	-.0339	-.0156	-.0227	-.0562
.590	-.0491	-.0430	-.0420	-.0359
.770	-.0643	-.0674	-.0694	-.0785
.950	-.0907	-.1039	-.0795	-.0775

BETA (3) = -1.040 ALPHA (4) = 6.200 Q(PSF) = 42.870 PO = 2117.8 RUN NO = 64.000

SECTION (1)MAIN LND GR DR-O DEPENDENT VARIABLE CP

Y/BML	.0380	.3100	.5820	.8530
X/CML				
.050	-.5043	-.5236	-.4973	-.4952
.230	-.0176	-.0146	-.0712	-.0490
.410	-.0065	.0258	.0248	.0076
.590	-.0186	-.0014	.0066	.0177
.770	-.0348	-.0287	-.0227	-.0277
.950	-.0601	-.0672	-.0389	-.0358

OA163B MAIN GEAR DOOR OUTER SURFACE (RFPM07)

BETA (4) = -.010 ALPHA (1) = .000 Q(PSF) = 42.835 PO = 2117.8 RUN NO = 65.000

SECTION (1)MAIN LND GR DR-O DEPENDENT VARIABLE CP

Y/BML	.0380	.3100	.5820	.8530
X/CML				
.050	-.7968	-.6797	-.7251	-.3981
.230	-.1094	-.1760	-.1407	-.2376
.410	-.1023	-.1054	-.1215	-.1942
.590	-.1235	-.1266	-.1387	-.1516
.770	-.1346	-.1458	-.1548	-.1629
.950	-.1619	-.1760	-.1589	-.1488

BETA (4) = -.010 ALPHA (2) = 2.050 Q(PSF) = 42.835 PO = 2117.8 RUN NO = 65.000

SECTION (1)MAIN LND GR DR-O DEPENDENT VARIABLE CP

Y/BML	.0380	.3100	.5820	.8530
X/CML				
.050	-.6926	-.6340	-.6562	-.4349
.230	-.0802	-.1277	-.1297	-.1702
.410	-.0711	-.0590	-.0711	-.1247
.590	-.0863	-.0853	-.0893	-.0944
.770	-.1025	-.1095	-.1105	-.1196
.950	-.1287	-.1419	-.1196	-.1146

BETA (4) = -.010 ALPHA (3) = 4.120 Q(PSF) = 42.835 PO = 2117.8 RUN NO = 65.000

SECTION (1)MAIN LND GR DR-O DEPENDENT VARIABLE CP

Y/BML	.0380	.3100	.5820	.8530
X/CML				
.050	-.5906	-.5835	-.5795	-.4701
.230	-.0541	-.0723	-.1128	-.1107
.410	-.0439	-.0156	-.0237	-.0551
.590	-.0611	-.0429	-.0389	-.0358
.770	-.0723	-.0682	-.0642	-.0682
.950	-.0996	-.1037	-.0753	-.0703

OA163B MAIN GEAR DOOR OUTER SURFACE (RFPM07)

BETA (4) = -.010 ALPHA (4) = 6.200 Q(PSF) = 42.835 PO = 2117.8 RUN NO = 65.000

SECTION (1)MAIN LND GR DR-O DEPENDENT VARIABLE CP

Y/BML	.0380	.3100	.5820	.8530
X/CML				
.050	-.5079	-.5393	-.4997	-.5251
.230	-.0298	-.0237	-.0958	-.0572
.410	-.0329	.0198	.0228	.0086
.590	-.0430	-.0034	.0107	.0178
.770	-.0542	-.0288	-.0197	-.0187
.950	-.0775	-.0704	-.0380	-.0339

BETA (5) = .980 ALPHA (1) = .000 Q(PSF) = 42.865 PO = 2117.8 RUN NO = 66.000

SECTION (1)MAIN LND GR DR-O DEPENDENT VARIABLE CP

Y/BML	.0380	.3100	.5820	.8530
X/CML				
.050	-.7754	-.6984	-.7319	-.4455
.230	-.1147	-.1845	-.1633	-.2371
.410	-.1076	-.1016	-.1188	-.1926
.590	-.1269	-.1258	-.1380	-.1532
.770	-.1390	-.1461	-.1552	-.1602
.950	-.1653	-.1774	-.1582	-.1491

BETA (5) = .980 ALPHA (2) = 2.080 Q(PSF) = 42.865 PO = 2117.8 RUN NO = 66.000

SECTION (1)MAIN LND GR DR-O DEPENDENT VARIABLE CP

Y/BML	.0380	.3100	.5820	.8530
X/CML				
.050	-.6739	-.6497	-.6618	-.4481
.230	-.0922	-.1295	-.1456	-.1637
.410	-.0841	-.0569	-.0720	-.1214
.590	-.0992	-.0881	-.0891	-.0982
.770	-.1123	-.1093	-.1093	-.1153
.950	-.1335	-.1426	-.1174	-.1103

OA1638 MAIN GEAR DOOR OUTER SURFACE (RFPM07)

BETA (5) = .980 ALPHA (3) = 4.120 Q(PSF) = 42.865 PO = 2117.8 RUN NO = 66.000

SECTION (1)MAIN LND GR DR-O DEPENDENT VARIABLE CP

Y/BML	.0380	.3100	.5820	.8530
X/CML				
.050	-.5911	-.5931	-.5820	-.5040
.230	-.0663	-.0703	-.1311	-.1129
.410	-.0713	-.0186	-.0227	-.0571
.590	-.0794	-.0440	-.0369	-.0369
.770	-.0906	-.0703	-.0632	-.0663
.950	-.1159	-.1068	-.0744	-.0683

BETA (5) = .990 ALPHA (4) = 6.200 Q(PSF) = 42.865 PO = 2117.8 RUN NO = 66.000

SECTION (1)MAIN LND GR DR-O DEPENDENT VARIABLE CP

Y/BML	.0380	.3100	.5820	.8530
X/CML				
.050	-.4907	-.5422	-.4897	-.5695
.230	-.0418	-.0247	-.1055	-.0570
.410	-.0762	.0187	.0228	.0076
.590	-.0691	-.0065	.0066	.0197
.770	-.0722	-.0327	-.0206	-.0156
.950	-.0954	-.0702	-.0348	-.0277

BETA (6) = 1.980 ALPHA (1) = .010 Q(PSF) = 42.770 PO = 2117.8 RUN NO = 67.000

SECTION (1)MAIN LND GR DR-O DEPENDENT VARIABLE CP

Y/BML	.0380	.3100	.5820	.8530
X/CML				
.050	-.7415	-.6970	-.7294	-.4574
.230	-.1207	-.1733	-.1723	-.2228
.410	-.1167	-.0985	-.1146	-.1864
.590	-.1318	-.1217	-.1328	-.1500
.770	-.1460	-.1419	-.1490	-.1531
.950	-.1713	-.1723	-.1490	-.1460

OA163B MAIN GEAR DOOR OUTER SURFACE (RFPM07)

BETA (6) = 1.980 ALPHA (2) = 2.080 Q(PSF) = 42.770 PO = 2117.8 RUN NO = 67.000

SECTION (1)MAIN LND GR DR-O DEPENDENT VARIABLE CP

Y/BML	.0380	.3100	.5820	.8530
X/CML				
.050	-.6669	-.6527	-.6517	-.4785
.230	-.1007	-.1189	-.1574	-.1615
.410	-.1068	-.0551	-.0683	-.1199
.590	-.1149	-.0835	-.0835	-.0916
.770	-.1250	-.1027	-.1047	-.1057
.950	-.1503	-.1392	-.1118	-.1027

BETA (6) = 1.980 ALPHA (3) = 4.120 Q(PSF) = 42.770 PO = 2117.8 RUN NO = 67.000

SECTION (1)MAIN LND GR DR-O DEPENDENT VARIABLE CP

Y/BML	.0380	.3100	.5820	.8530
X/CML				
.050	-.5762	-.6056	-.5843	-.5326
.230	-.0795	-.0653	-.1342	-.1109
.410	-.1129	-.0197	-.0257	-.0551
.590	-.1068	-.0470	-.0409	-.0359
.770	-.1078	-.0724	-.0632	-.0592
.950	-.1291	-.1078	-.0754	-.0683

BETA (6) = 1.980 ALPHA (4) = 6.200 Q(PSF) = 42.770 PO = 2117.8 RUN NO = 67.000

SECTION (1)MAIN LND GR DR-O DEPENDENT VARIABLE CP

Y/BML	.0380	.3100	.5820	.8530
X/CML				
.050	-.4228	-.5639	-.4857	-.6157
.230	-.0623	-.0238	-.1202	-.0664
.410	-.0979	.0127	.0188	.0056
.590	-.0826	-.0106	.0066	.0208
.770	-.0816	-.0359	-.0227	-.0116
.950	-.1070	-.0725	-.0370	-.0329

0A163B MAIN GEAR DOOR OUTER SURFACE (RFPM08) (27 APR 77)

REFERENCE DATA

SREF = 2690.0000 SQ.FT. XMRP = 1076.7000 IN. XO
LREF = 474.8100 INCHES YMRP = .0000 IN. YO
BREF = 936.6800 INCHES ZMRP = 375.0000 IN. ZO
SCALE = .0405

PARAMETRIC DATA

SPDBRK =	25.000	BDFLAP =	.000
ELV-L =	.000	ELV-R =	.000
PHI-N =	66.000	THETAN =	108.000
PHI-ML =	32.200	THETML =	5.000
PHI-MR =	32.200	THETMR =	5.000

BETA (1) = -5.030 ALPHA (1) = .000 Q(PSF) = 42.787 PO = 2116.4 RUN NO = 68.000

SECTION (1)MAIN LND GR DR-O DEPENDENT VARIABLE CP

Y/BML	.0380	.3100	.5820	.8530
X/CML				
.050	-.7276	-.6670	-.8183	-.1930
.230	-.1174	-.1144	-.1204	-.2152
.410	-.1386	-.1224	-.1355	-.1739
.590	-.1476	-.1416	-.1436	-.1426
.770	-.1638	-.1597	-.1688	-.2021
.950	-.1860	-.1950	-.1749	-.1759

BETA (1) = -5.040 ALPHA (2) = 2.090 Q(PSF) = 42.787 PO = 2116.4 RUN NO = 68.000

SECTION (1)MAIN LND GR DR-O DEPENDENT VARIABLE CP

Y/BML	.0380	.3100	.5820	.8530
X/CML				
.050	-.7182	-.6008	-.7010	-.1259
.230	-.0672	-.0753	-.0490	-.1543
.410	-.0895	-.0753	-.0794	-.1148
.590	-.1037	-.0946	-.0946	-.0865
.770	-.1199	-.1178	-.1270	-.1563
.950	-.1462	-.1523	-.1330	-.1351

BETA (1) = -5.030 ALPHA (3) = 4.130 Q(PSF) = 42.787 PO = 2116.4 RUN NO = 68.000

SECTION (1)MAIN LND GR DR-O DEPENDENT VARIABLE CP

Y/BML	.0380	.3100	.5820	.8530
X/CML				
.050	-.6776	-.5335	-.5903	-.1578
.230	-.0298	-.0359	.0025	-.0908
.410	-.0461	-.0309	-.0268	-.0593
.590	-.0603	-.0522	-.0441	-.0349
.770	-.0786	-.0755	-.0786	-.1050
.950	-.1050	-.1141	-.0928	-.0877

OA163B MAIN GEAR DOOR OUTER SURFACE (RFPM08)

BETA (1) = -5.030 ALPHA (4) = 6.210 Q(PSF) = 42.787 PO = 2116.4 RUN NO = 68.000

SECTION (1)MAIN LND GR DR-O DEPENDENT VARIABLE CP

Y/BML	.0380	.3100	.5820	.8530
X/CML				
.050	-.5780	-.4725	-.4968	-.2968
.230	.0056	.0066	.0279	-.0400
.410	.0015	.0198	.0300	.0168
.590	-.0156	-.0055	.0076	.0228
.770	-.0329	-.0319	-.0298	-.0562
.950	-.0603	-.0684	-.0471	-.0501

BETA (2) = -2.020 ALPHA (1) = .000 Q(PSF) = 42.880 PO = 2116.5 RUN NO = 69.000

SECTION (1)MAIN LND GR DR-O DEPENDENT VARIABLE CP

Y/BML	.0380	.3100	.5820	.8530
X/CML				
.050	-.8289	-.6620	-.7449	-.2917
.230	-.1066	-.1542	-.1046	-.2209
.410	-.1107	-.1147	-.1289	-.2068
.590	-.1299	-.1339	-.1471	-.1673
.770	-.1461	-.1542	-.1663	-.1754
.950	-.1703	-.1845	-.1683	-.1531

BETA (2) = -2.020 ALPHA (2) = 2.060 Q(PSF) = 42.880 PO = 2116.5 RUN NO = 69.000

SECTION (1)MAIN LND GR DR-O DEPENDENT VARIABLE CP

Y/BML	.0380	.3100	.5820	.8530
X/CML				
.050	-.7489	-.6045	-.6499	-.4004
.230	-.0731	-.1156	-.0812	-.1681
.410	-.0721	-.0701	-.0751	-.1388
.590	-.0913	-.0923	-.0964	-.1024
.770	-.1034	-.1125	-.1206	-.1317
.950	-.1297	-.1469	-.1287	-.1156

OA163B MAIN GEAR DOOR OUTER SURFACE (RFPM08)

BETA (2) = -2.020 ALPHA (3) = 4.120 Q(PSF) = 42.880 PO = 2116.5 RUN NO = 69.000

SECTION (1)MAIN LND GR DR-O DEPENDENT VARIABLE CP

Y/BML	.0380	.3100	.5820	.8530
X/CML				
.050	-.6410	-.5552	-.5684	-.4776
.230	-.0397	-.0740	-.0821	-.1094
.410	-.0347	-.0196	-.0196	-.0660
.590	-.0488	-.0458	-.0438	-.0397
.770	-.0660	-.0700	-.0740	-.0872
.950	-.0942	-.1053	-.0851	-.0761

BETA (2) = -2.020 ALPHA (4) = 6.200 Q(PSF) = 42.860 PO = 2116.5 RUN NO = 69.000

SECTION (1)MAIN LND GR DR-O DEPENDENT VARIABLE CP

Y/BML	.0380	.3100	.5820	.8530
X/CML				
.050	-.5065	-.5035	-.4832	-.5257
.230	-.0075	-.0227	-.0682	-.0490
.410	.0035	.0278	.0258	.0005
.590	-.0105	-.0024	.0056	.0167
.770	-.0277	-.0277	-.0257	-.0348
.950	-.0571	-.0672	-.0419	-.0338

BETA (3) = -1.020 ALPHA (1) = .000 Q(PSF) = 42.887 PO = 2116.4 RUN NO = 70.000

SECTION (1)MAIN LND GR DR-O DEPENDENT VARIABLE CP

Y/BML	.0380	.3100	.5820	.8530
X/CML				
.050	-.8312	-.6652	-.7280	-.4001
.230	-.1077	-.1674	-.1208	-.2352
.410	-.1087	-.1107	-.1249	-.2068
.590	-.1249	-.1330	-.1461	-.1664
.770	-.1390	-.1512	-.1633	-.1694
.950	-.1653	-.1805	-.1664	-.1481

OA1638 MAIN GEAR DOOR OUTER SURFACE (RFPM08)

BETA (3) = -1.010 ALPHA (2) = 2.070 Q(PSF) = 42.887 PO = 2116.4 RUN NO = 70.000

SECTION (1)MAIN LND GR DR-O DEPENDENT VARIABLE CP

Y/BML	.0380	.3100	.5820	.8530
X/CML				
.050	-.7352	-.6161	-.6424	-.4869
.230	-.0751	-.1286	-.1135	-.1770
.410	-.0700	-.0640	-.0731	-.1377
.590	-.0872	-.0882	-.0923	-.1023
.770	-.1003	-.1104	-.1165	-.1256
.950	-.1276	-.1437	-.1246	-.1145

BETA (3) = -1.020 ALPHA (3) = 4.140 Q(PSF) = 42.887 PO = 2116.4 RUN NO = 70.000

SECTION (1)MAIN LND GR DR-O DEPENDENT VARIABLE CP

Y/BML	.0380	.3100	.5820	.8530
X/CML				
.050	-.6126	-.5701	-.5641	-.5347
.230	-.0459	-.0773	-.1087	-.1117
.410	-.0358	-.0146	-.0237	-.0672
.590	-.0500	-.0439	-.0419	-.0399
.770	-.0642	-.0672	-.0682	-.0783
.950	-.0925	-.1046	-.0803	-.0682

BETA (3) = -1.020 ALPHA (4) = 6.210 Q(PSF) = 42.887 PO = 2116.4 RUN NO = 70.000

SECTION (1)MAIN LND GR DR-O DEPENDENT VARIABLE CP

Y/BML	.0380	.3100	.5820	.8530
X/CML				
.050	-.4876	-.5148	-.4815	-.5683
.230	-.0196	-.0236	-.0942	-.0539
.410	-.0095	.0247	.0227	-.0024
.590	-.0236	-.0024	.0086	.0156
.770	-.0367	-.0286	-.0236	-.0236
.950	-.0660	-.0680	-.0407	-.0307

OA163B MAIN GEAR DOOR OUTER SURFACE (RFPM08)

BETA (4) = .010 ALPHA (1) = -.010 Q(PSF) = 42.855 PO = 2116.4 RUN NO = 71.000

SECTION (1)MAIN LND GR DR-O DEPENDENT VARIABLE CP

Y/BML	.0380	.3100	.5820	.8530
X/CML				
.050	-.8259	-.6743	-.7158	-.4874
.230	-.1095	-.1863	-.1499	-.2429
.410	-.1045	-.1075	-.1227	-.2045
.590	-.1227	-.1287	-.1408	-.1658
.770	-.1368	-.1489	-.1590	-.1651
.950	-.1631	-.1792	-.1651	-.1479

BETA (4) = .000 ALPHA (2) = 2.050 Q(PSF) = 42.855 PO = 2116.4 RUN NO = 71.000

SECTION (1)MAIN LND GR DR-O DEPENDENT VARIABLE CP

Y/BML	.0380	.3100	.5820	.8530
X/CML				
.050	-.7218	-.6268	-.6420	-.5238
.230	-.0792	-.1338	-.1459	-.1792
.410	-.0681	-.0590	-.0731	-.1378
.590	-.0812	-.0853	-.0913	-.1024
.770	-.0964	-.1075	-.1126	-.1206
.950	-.1227	-.1429	-.1216	-.1075

BETA (4) = .010 ALPHA (3) = 4.120 Q(PSF) = 42.855 PO = 2116.4 RUN NO = 71.000

SECTION (1)MAIN LND GR DR-O DEPENDENT VARIABLE CP

Y/BML	.0380	.3100	.5820	.8530
X/CML				
.050	-.6074	-.5862	-.5670	-.5781
.230	-.0601	-.0793	-.1400	-.1178
.410	-.0500	-.0166	-.0247	-.0702
.590	-.0631	-.0459	-.0439	-.0429
.770	-.0783	-.0732	-.0682	-.0712
.950	-.1056	-.1076	-.0823	-.0682

OA163B MAIN GEAR DOOR OUTER SURFACE (RFPM08)

BETA (4) = .010 ALPHA (4) = 6.200 Q(PSF) = 42.855 PO = 2116.4 RUN NO = 71.000

SECTION (1)MAIN LND GR DR-O DEPENDENT VARIABLE CP

Y/BML	.0380	.3100	.5820	.8530
X/CML				
.050	-.5016	-.5290	-.4783	-.5948
.230	-.0338	-.0379	-.1138	-.0612
.410	-.0480	.0218	.0238	-.0085
.590	-.0490	-.0045	.0086	.0177
.770	-.0601	-.0308	-.0207	-.0105
.950	-.0834	-.0703	-.0419	-.0288

BETA (5) = 1.000 ALPHA (1) = .000 Q(PSF) = 42.827 PO = 2116.5 RUN NO = 72.000

SECTION (1)MAIN LND GR DR-O DEPENDENT VARIABLE CP

Y/BML	.0380	.3100	.5820	.8530
X/CML				
.050	-.8038	-.6824	-.7097	-.5509
.230	-.1159	-.1906	-.1825	-.2443
.410	-.1087	-.0996	-.1178	-.2018
.590	-.1238	-.1249	-.1400	-.1633
.770	-.1380	-.1471	-.1562	-.1603
.950	-.1643	-.1765	-.1613	-.1471

BETA (5) = 1.000 ALPHA (2) = 2.080 Q(PSF) = 42.827 PO = 2116.5 RUN NO = 72.000

SECTION (1)MAIN LND GR DR-O DEPENDENT VARIABLE CP

Y/BML	.0380	.3100	.5820	.8530
X/CML				
.050	-.7003	-.6425	-.6405	-.5583
.230	-.0937	-.1404	-.1668	-.1749
.410	-.0876	-.0592	-.0694	-.1414
.590	-.1039	-.0866	-.0897	-.1039
.770	-.1160	-.1079	-.1110	-.1160
.950	-.1434	-.1424	-.1191	-.1029

OA163B MAIN GEAR DOOR OUTER SURFACE (RFPM0B)

BETA (5) = 1.000 ALPHA (3) = 4.140 Q(PSF) = 42.827 PO = 2116.5 RUN NO = 72.000

SECTION (1)MAIN LND GR DR-O DEPENDENT VARIABLE CP

Y/BML	.0380	.3100	.5820	.8530
X/CML				
.050	-.5973	-.5892	-.5619	-.6024
.230	-.0692	-.0844	-.1501	-.1218
.410	-.0874	-.0156	-.0227	-.0732
.590	-.0904	-.0469	-.0388	-.0439
.770	-.0965	-.0702	-.0641	-.0591
.950	-.1218	-.1076	-.0763	-.0672

BETA (5) = 1.000 ALPHA (4) = 6.200 Q(PSF) = 42.827 PO = 2116.5 RUN NO = 72.000

SECTION (1)MAIN LND GR DR-O DEPENDENT VARIABLE CP

Y/BML	.0380	.3100	.5820	.8530
X/CML				
.050	-.5012	-.5365	-.4861	-.6264
.230	-.0489	-.0529	-.1367	-.0751
.410	-.0933	.0187	.0197	-.0166
.590	-.0792	-.0085	.0056	.0157
.770	-.0781	-.0337	-.0216	-.0115
.950	-.1014	-.0741	-.0398	-.0347

BETA (6) = 1.990 ALPHA (1) = .000 Q(PSF) = 42.890 PO = 2116.5 RUN NO = 73.000

SECTION (1)MAIN LND GR DR-O DEPENDENT VARIABLE CP

Y/BML	.0380	.3100	.5820	.8530
X/CML				
.050	-.7792	-.6965	-.7076	-.5653
.230	-.1265	-.1901	-.1961	-.2334
.410	-.1225	-.0983	-.1144	-.2012
.590	-.1366	-.1255	-.1366	-.1608
.770	-.1517	-.1447	-.1527	-.1558
.950	-.1769	-.1790	-.1558	-.1416

OA163B MAIN GEAR DOOR OUTER SURFACE (RFPM0B)

BETA (6) = 1.990 ALPHA (2) = 2.070 Q(PSF) = 42.890 PO = 2116.5 RUN NO = 73.000

SECTION (1)MAIN LND GR DR-O DEPENDENT VARIABLE CP

Y/BML	.0380	.3100	.5820	.8530
X/CML				
.050	-.6835	-.6460	-.6369	-.5823
.230	-.1056	-.1350	-.1805	-.1765
.410	-.1168	-.0550	-.0682	-.1390
.590	-.1249	-.0844	-.0864	-.0998
.770	-.1330	-.1046	-.1026	-.1036
.950	-.1573	-.1401	-.1127	-.0976

BETA (6) = 1.980 ALPHA (3) = 4.130 Q(PSF) = 42.890 PO = 2116.5 RUN NO = 73.000

SECTION (1)MAIN LND GR DR-O DEPENDENT VARIABLE CP

Y/BML	.0380	.3100	.5820	.8530
X/CML				
.050	-.5921	-.5962	-.5679	-.6012
.230	-.0852	-.0872	-.1670	-.1286
.410	-.1307	-.0226	-.0236	-.0782
.590	-.1145	-.0489	-.0408	-.0428
.770	-.1145	-.0731	-.0640	-.0519
.950	-.1367	-.1095	-.0771	-.0721

BETA (6) = 1.980 ALPHA (4) = 6.200 Q(PSF) = 42.890 PO = 2116.5 RUN NO = 73.000

SECTION (1)MAIN LND GR DR-O DEPENDENT VARIABLE CP

Y/BML	.0380	.3100	.5820	.8530
X/CML				
.050	-.4666	-.5445	-.4798	-.5426
.230	-.0823	-.0580	-.1551	-.0904
.410	-.1187	.0106	.0157	-.0156
.590	-.0975	-.0135	.0086	.0177
.770	-.0934	-.0368	-.0237	.0005
.950	-.1137	-.0752	-.0409	-.0398

OA163B MAIN GEAR DOOR OUTER SURFACE (RFPM08)

BETA (7) = 5.010 ALPHA (1) = .030 Q(PSF) = 42.820 PO = 2116.5 RUN NO = 74.000

SECTION (1)MAIN LND GR DR-O DEPENDENT VARIABLE CP

Y/BML	.0380	.3100	.5820	.8530
X/CML				
.050	-.6103	-.7335	-.7203	-.5446
.230	-.1660	-.1488	-.2165	-.2205
.410	-.1953	-.0594	-.1135	-.1882
.590	-.1842	-.1246	-.1266	-.1519
.770	-.1822	-.1428	-.1418	-.1337
.950	-.2003	-.1731	-.1458	-.1327

BETA (7) = 5.020 ALPHA (2) = 2.060 Q(PSF) = 42.820 PO = 2116.5 RUN NO = 74.000

SECTION (1)MAIN LND GR DR-O DEPENDENT VARIABLE CP

Y/BML	.0380	.3100	.5820	.8530
X/CML				
.050	-.2215	-.7302	-.6282	-.6868
.230	-.1710	-.0862	-.1730	-.1690
.410	-.1781	-.0761	-.0731	-.1296
.590	-.1609	-.0943	-.0842	-.0902
.770	-.1609	-.1124	-.1013	-.0812
.950	-.1791	-.1427	-.1104	-.1044

BETA (7) = 5.020 ALPHA (3) = 4.120 Q(PSF) = 42.820 PO = 2116.5 RUN NO = 74.000

SECTION (1)MAIN LND GR DR-O DEPENDENT VARIABLE CP

Y/BML	.0380	.3100	.5820	.8530
X/CML				
.050	-.1951	-.7083	-.6028	-.6677
.230	-.1890	-.0572	-.1130	-.1170
.410	-.1718	-.0531	-.0471	-.0714
.590	-.1505	-.0633	-.0501	-.0379
.770	-.1454	-.0805	-.0684	-.0440
.950	-.1647	-.1130	-.0815	-.0836

OA163B MAIN GEAR DOOR OUTER SURFACE (RFPM0B)

BETA (7) = 5.010 ALPHA (4) = 6.200 Q(PSF) = 42.820 PO = 2116.5 RUN NO = 74.000

SECTION (1)MAIN LND GR DR-O DEPENDENT VARIABLE CP

Y/BML	.0380	.3100	.5820	.8530
X/CML				
.050	-.1912	-.6184	-.5291	-.5454
.230	-.2369	-.0339	-.0755	-.0633
.410	-.1841	-.0268	-.0146	-.0177
.590	-.1567	-.0329	-.0126	.0036
.770	-.1465	.0522	-.0349	-.0065
.950	-.1638	-.0867	-.0532	-.0613

OA163B MAIN GEAR DOOR OUTER SURFACE (RFPM09) (27 APR 77)

REFERENCE DATA

SREF = 2690.0000 SQ.FT. XMRP = 1076.7000 IN. XO
LREF = 474.8100 INCHES YMRP = .0000 IN. YO
BREF = 936.6800 INCHES ZMRP = 375.0000 IN. ZO
SCALE = .0405

PARAMETRIC DATA

SPDBRK =	25.000	BDFLAP =	.000
ELV-L =	.000	ELV-R =	.000
PHI-N =	66.000	THETAN =	108.000
PHI-ML =	32.200	THETML =	5.000
PHI-MR =	36.000	THETMR =	5.600

BETA (1) = -5.030 ALPHA (1) = .000 Q(PSF) = 42.795 PO = 2113.0 RUN NO = 75.000

SECTION (1)MAIN LND GR DR-O DEPENDENT VARIABLE CP

Y/BML	.0380	.3100	.5820	.8530
X/CML				
.050	-.7272	-.6798	-.8191	-.1922
.230	-.1205	-.1165	-.1215	-.2164
.410	-.1367	-.1256	-.1377	-.1750
.590	-.1498	-.1427	-.1458	-.1448
.770	-.1649	-.1619	-.1720	-.2023
.950	-.1892	-.1942	-.1781	-.1781

BETA (1) = -5.030 ALPHA (2) = 2.060 Q(PSF) = 42.795 PO = 2113.0 RUN NO = 75.000

SECTION (1)MAIN LND GR DR-O DEPENDENT VARIABLE CP

Y/BML	.0380	.3100	.5820	.8530
X/CML				
.050	-.7199	-.5995	-.6935	-.1279
.230	-.0682	-.0743	-.0490	-.1562
.410	-.0894	-.0753	-.0814	-.1137
.590	-.1046	-.0965	-.0935	-.0864
.770	-.1218	-.1188	-.1269	-.1552
.950	-.1451	-.1522	-.1340	-.1330

BETA (1) = -5.040 ALPHA (3) = 4.130 Q(PSF) = 42.795 PO = 2113.0 RUN NO = 75.000

SECTION (1)MAIN LND GR DR-O DEPENDENT VARIABLE CP

Y/BML	.0380	.3100	.5820	.8530
X/CML				
.050	-.6657	-.5300	-.5897	-.1614
.230	-.0283	-.0318	.0056	-.0905
.410	-.0439	-.0277	-.0267	-.0571
.590	-.0591	-.0490	-.0460	-.0328
.770	-.0774	-.0733	-.0784	-.1027
.950	-.1047	-.1108	-.0905	-.0875

OA163B MAIN GEAR DOOR OUTER SURFACE (RFPM09)

BETA (1) = -5.030 ALPHA (4) = 6.220 Q(PSF) = 42.795 PO = 2113.0 RUN NO = 75.000

SECTION (1)MAIN LND GR DR-O DEPENDENT VARIABLE CP

Y/BML	.0380	.3100	.5820	.8530
X/CML				
.050	-.5769	-.4732	-.4956	-.3054
.230	.0086	.0066	.0290	-.0390
.410	.0046	.0219	.0310	.0158
.590	-.0126	-.0004	.0076	.0249
.770	-.0319	-.0309	-.0309	-.0553
.950	-.0604	-.0655	-.0451	-.0482

BETA (2) = -2.010 ALPHA (1) = .000 Q(PSF) = 42.930 PO = 2113.0 RUN NO = 76.000

SECTION (1)MAIN LND GR DR-O DEPENDENT VARIABLE CP

Y/BML	.0380	.3100	.5820	.8530
X/CML				
.050	-.8288	-.6609	-.7403	-.2970
.230	-.1050	-.1522	-.1040	-.2216
.410	-.1120	-.1140	-.1281	-.2035
.590	-.1281	-.1341	-.1462	-.1673
.770	-.1442	-.1532	-.1673	-.1753
.950	-.1673	-.1844	-.1683	-.1522

BETA (2) = -2.010 ALPHA (2) = 2.080 Q(PSF) = 42.930 PO = 2113.0 RUN NO = 76.000

SECTION (1)MAIN LND GR DR-O DEPENDENT VARIABLE CP

Y/BML	.0380	.3100	.5820	.8530
X/CML				
.050	-.7482	-.6057	-.6512	-.4086
.230	-.0742	-.1196	-.0782	-.1681
.410	-.0742	-.0701	-.0742	-.1388
.590	-.0893	-.0913	-.0944	-.1015
.770	-.1065	-.1126	-.1186	-.1297
.950	-.1318	-.1449	-.1267	-.1146

OA163B MAIN GEAR DOOR OUTER SURFACE (RFPM09)

BETA (2) = -2.010 ALPHA (3) = 4.140 Q(PSF) = 42.930 PO = 2113.0 RUN NO = 76.000

SECTION (1)MAIN LND GR DR-O DEPENDENT VARIABLE CP

Y/BML	.0380	.3100	.5820	.8530
X/CML				
.050	-.6369	-.5590	-.5671	-.4760
.230	-.0368	-.0763	-.0773	-.1087
.410	-.0328	-.0166	-.0227	-.0652
.590	-.0500	-.0449	-.0409	-.0389
.770	-.0652	-.0692	-.0722	-.0854
.950	-.0905	-.1077	-.0864	-.0743

BETA (2) = -2.010 ALPHA (4) = 6.200 Q(PSF) = 42.930 PO = 2113.0 RUN NO = 76.000

SECTION (1)MAIN LND GR DR-O DEPENDENT VARIABLE CP

Y/BML	.0380	.3100	.5820	.8530
X/CML				
.050	-.5097	-.5026	-.4854	-.5238
.230	-.0065	-.0216	-.0610	-.0469
.410	.0035	.0258	.0278	-.0004
.590	-.0105	-.0004	.0046	.0177
.770	-.0267	-.0287	-.0226	-.0337
.950	-.0540	-.0661	-.0408	-.0348

BETA (3) = -1.020 ALPHA (1) = .000 Q(PSF) = 42.845 PO = 2112.9 RUN NO = 77.000

SECTION (1)MAIN LND GR DR-O DEPENDENT VARIABLE CP

Y/BML	.0380	.3100	.5820	.8530
X/CML				
.050	-.8363	-.6691	-.7330	-.3966
.230	-.1068	-.1686	-.1230	-.2375
.410	-.1078	-.1108	-.1271	-.2081
.590	-.1260	-.1331	-.1453	-.1666
.770	-.1402	-.1524	-.1645	-.1706
.950	-.1656	-.1838	-.1666	-.1504

OA163B MAIN GEAR DOOR OUTER SURFACE (RFPM09)

BETA (3) = -1.020 ALPHA (2) = 2.060 Q(PSF) = 42.845 PO = 2112.9 RUN NO = 77.000

SECTION (1)MAIN LND GR DR-O DEPENDENT VARIABLE CP

Y/BML	.0380	.3100	.5820	.8530
X/CML				
.050	-.7369	-.6226	-.6489	-.4880
.230	-.0753	-.1299	-.1137	-.1764
.410	-.0712	-.0621	-.0742	-.1410
.590	-.0874	-.0874	-.0945	-.1046
.770	-.1036	-.1107	-.1188	-.1279
.950	-.1299	-.1441	-.1258	-.1157

BETA (3) = -1.020 ALPHA (3) = 4.140 Q(PSF) = 42.845 PO = 2112.9 RUN NO = 77.000

SECTION (1)MAIN LND GR DR-O DEPENDENT VARIABLE CP

Y/BML	.0380	.3100	.5820	.8530
X/CML				
.050	-.6164	-.5669	-.5639	-.5305
.230	-.0468	-.0782	-.1095	-.1135
.410	-.0357	-.0176	-.0236	-.0670
.590	-.0489	-.0438	-.0428	-.0418
.770	-.0660	-.0691	-.0691	-.0782
.950	-.0923	-.1044	-.0812	-.0691

BETA (3) = -1.020 ALPHA (4) = 6.210 Q(PSF) = 42.845 PO = 2112.9 RUN NO = 77.000

SECTION (1)MAIN LND GR DR-O DEPENDENT VARIABLE CP

Y/BML	.0380	.3100	.5820	.8530
X/CML				
.050	-.5041	-.5162	-.4828	-.5678
.230	-.0196	-.0287	-.0934	-.0540
.410	-.0085	.0288	.0278	-.0044
.590	-.0206	-.0004	.0056	.0167
.770	-.0388	-.0307	-.0206	-.0257
.950	-.0661	-.0672	-.0383	-.0318

DATE 27 APR 77 OA163B PRESSURE DATA LISTING

OA163B MAIN GEAR DOOR OUTER SURFACE (RFPM09)

BETA (4) = .000 ALPHA (1) = .000 Q(PSF) = 42.915 PO = 2112.9 RUN NO = 78.000

SECTION (1)MAIN LND GR DR-O DEPENDENT VARIABLE CF

Y/BML	.0380	.3100	.5820	.8530
X/CML				
.050	-.8213	-.6711	-.7154	-.4835
.230	-.1083	-.1829	-.1507	-.2445
.410	-.1053	-.1053	-.1214	-.2031
.590	-.1234	-.1285	-.1406	-.1638
.770	-.1355	-.1476	-.1608	-.1648
.950	-.1628	-.1789	-.1638	-.1466

BETA (4) = .000 ALPHA (2) = 2.090 Q(PSF) = 42.915 PO = 2112.9 RUN NO = 78.000

SECTION (1)MAIN LND GR DR-O DEPENDENT VARIABLE CP

Y/BML	.0380	.3100	.5820	.8530
X/CML				
.050	-.7171	-.6300	-.6432	-.5379
.230	-.0824	-.1340	-.1502	-.1775
.410	-.0743	-.0591	-.0702	-.1381
.590	-.0895	-.0854	-.0925	-.1006
.770	-.1016	-.1067	-.1148	-.1198
.950	-.1279	-.1431	-.1198	-.1057

BETA (4) = .000 ALPHA (3) = 4.140 Q(PSF) = 42.915 PO = 2112.9 RUN NO = 78.000

SECTION (1)MAIN LND GR DR-O DEPENDENT VARIABLE CP

Y/BML	.0380	.3100	.5820	.8530
X/CML				
.050	-.5976	-.5824	-.5653	-.5834
.230	-.0589	-.0882	-.1356	-.1174
.410	-.0508	-.0155	-.0256	-.0690
.590	-.0629	-.0438	-.0428	-.0407
.770	-.0771	-.0690	-.0670	-.0710
.950	-.1053	-.1073	-.0771	-.0670

OA163B MAIN GEAR DOOR OUTER SURFACE (RFPMDS)

BETA (4) = .000 ALPHA (4) = 6.210 Q(PSF) = 42.915 PO = 2112.9 RUN NO = 78.000

SECTION (1)MAIN LND GR DR-O DEPENDENT VARIABLE CP

Y/BML	.0380	.3100	.5820	.8530
X/CML				
.050	-.4972	-.5255	-.4830	-.5971
.230	-.0327	-.0367	-.1155	-.0660
.410	-.0458	.0227	.0217	-.0095
.590	-.0489	-.0065	.0066	.0146
.770	-.0590	-.0317	-.0206	-.0166
.950	-.0832	-.0701	-.0367	-.0307

BETA (5) = 1.000 ALPHA (1) = -.010 Q(PSF) = 42.792 PO = 2112.9 RUN NO = 79.000

SECTION (1)MAIN LND GR DR-O DEPENDENT VARIABLE CP

Y/BML	.0380	.3100	.5820	.8530
X/CML				
.050	-.8062	-.6872	-.7073	-.5500
.230	-.1154	-.1860	-.1759	-.2414
.410	-.1073	-.0992	-.1154	-.2011
.590	-.1244	-.1275	-.1365	-.1618
.770	-.1376	-.1456	-.1547	-.1607
.950	-.1648	-.1769	-.1597	-.1446

BETA (5) = 1.000 ALPHA (2) = 2.070 Q(PSF) = 42.792 PO = 2112.9 RUN NO = 79.000

SECTION (1)MAIN LND GR DR-O DEPENDENT VARIABLE CP

Y/BML	.0380	.3100	.5820	.8530
X/CML				
.050	-.6995	-.6394	-.6394	-.5570
.230	-.0930	-.1347	-.1663	-.1714
.410	-.0859	-.0574	-.0686	-.1408
.590	-.1011	-.0849	-.0869	-.1001
.770	-.1154	-.1083	-.1093	-.1113
.950	-.1418	-.1418	-.1164	-.1011

OA163B MAIN GEAR DOOR OUTER SURFACE (RFPM09)

BETA (5) = 1.000 ALPHA (3) = 4.120 Q(PSF) = 42.792 PO = 2112.9 RUN NO = 79.000

SECTION (1)MAIN LND GR DR-O DEPENDENT VARIABLE CP

Y/BML	.0380	.3100	.5820	.8530
X/CML				
.050	-.6003	-.5902	-.5669	-.6023
.230	-.0703	-.0855	-.1544	-.1220
.410	-.0855	-.0176	-.0217	-.0723
.590	-.0886	-.0450	-.0409	-.0430
.770	-.0977	-.0683	-.0642	-.0602
.950	-.1190	-.1068	-.0774	-.0673

BETA (5) = 1.000 ALPHA (4) = 6.190 Q(PSF) = 42.792 PO = 2112.9 RUN NO = 79.000

SECTION (1)MAIN LND GR DR-O DEPENDENT VARIABLE CP

Y/BML	.0380	.3100	.5820	.8530
X/CML				
.050	-.5163	-.5406	-.4890	-.6256
.230	-.0510	-.0479	-.1349	-.0783
.410	-.0945	.0187	.0197	-.0136
.590	-.0793	-.0095	.0056	.0127
.770	-.0763	-.0348	-.0257	-.0095
.950	-.1016	-.0732	-.0409	-.0358

BETA (6) = 1.990 ALPHA (1) = .000 Q(PSF) = 42.855 PO = 2112.9 RUN NO = 80.000

SECTION (1)MAIN LND GR DR-O DEPENDENT VARIABLE CP

Y/BML	.0380	.3100	.5820	.8530
X/CML				
.050	-.7767	-.6951	-.7112	-.5700
.230	-.1254	-.1849	-.1980	-.2323
.410	-.1204	-.0972	-.1153	-.2031
.590	-.1345	-.1234	-.1345	-.1607
.770	-.1496	-.1446	-.1526	-.1557
.950	-.1768	-.1758	-.1557	-.1395

OA163B MAIN GEAR DOOR OUTER SURFACE (RFPM09)

BETA (6) = 1.990 ALPHA (2) = 2.060 Q(PSF) = 42.855 PO = 2112.9 RUN NO = 80.000

SECTION (1)MAIN LND GR DR-O DEPENDENT VARIABLE CP

Y/BML	.0380	.3100	.5820	.8530
X/CML				
.050	-.6847	-.6473	-.6402	-.5855
.230	-.1067	-.1330	-.1867	-.1755
.410	-.1188	-.0561	-.0692	-.1391
.590	-.1229	-.0864	-.0875	-.1006
.770	-.1350	-.1077	-.1067	-.1077
.950	-.1573	-.1431	-.1148	-.0986

BETA (6) = 1.990 ALPHA (3) = 4.120 Q(PSF) = 42.855 PO = 2112.9 RUN NO = 80.000

SECTION (1)MAIN LND GR DR-O DEPENDENT VARIABLE CP

Y/BML	.0380	.3100	.5820	.8530
X/CML				
.050	-.5947	-.5978	-.5674	-.6089
.230	-.0865	-.0875	-.1664	-.1259
.410	-.1280	-.0227	-.0227	-.0763
.590	-.1158	-.0480	-.0399	-.0419
.770	-.1138	-.0723	-.0652	-.0490
.950	-.1351	-.1067	-.0763	-.0713

BETA (6) = 1.990 ALPHA (4) = 6.210 Q(PSF) = 42.855 PO = 2112.9 RUN NO = 80.000

SECTION (1)MAIN LND GR DR-O DEPENDENT VARIABLE CP

Y/BML	.0380	.3100	.5820	.8530
X/CML				
.050	-.4791	-.5489	-.4770	-.6440
.230	-.0803	-.0631	-.1573	-.0925
.410	-.1178	.0106	.0187	-.0136
.590	-.0945	-.0115	.0076	.0177
.770	-.0925	-.0368	-.0217	.0035
.950	-.1137	-.0743	-.0399	-.0368

0A163B MAIN GEAR DOOR OUTER SURFACE (RFPM09)

BETA (7) = 5.020 ALPHA (1) = .000 Q(PSF) = 42.877 PO = 2113.0 RUN NO = 81.000

SECTION (1)MAIN LND GR DR-O DEPENDENT VARIABLE CP

Y/BML	.0380	.3100	.5820	.8530
X/CML				
.050	-.6047	-.7294	-.7153	-.5494
.230	-.1663	-.1512	-.2146	-.2196
.410	-.1945	-.0979	-.1120	-.1884
.590	-.1834	-.1261	-.1281	-.1472
.770	-.1814	-.1422	-.1412	-.1331
.950	-.2005	-.1733	-.1452	-.1331

BETA (7) = 5.020 ALPHA (2) = 2.060 Q(PSF) = 42.877 PO = 2113.0 RUN NO = 81.000

SECTION (1)MAIN LND GR DR-O DEPENDENT VARIABLE CP

Y/BML	.0380	.3100	.5820	.8530
X/CML				
.050	-.2281	-.7310	-.6288	-.6794
.230	-.1724	-.0854	-.1744	-.1664
.410	-.1805	-.0773	-.0763	-.1299
.590	-.1613	-.0935	-.0854	-.0905
.770	-.1593	-.1127	-.1046	-.0824
.950	-.1795	-.1421	-.1117	-.1077

BETA (7) = 5.020 ALPHA (3) = 4.130 Q(PSF) = 42.877 PO = 2113.0 RUN NO = 81.000

SECTION (1)MAIN LND GR DR-O DEPENDENT VARIABLE CP

Y/BML	.0380	.3100	.5820	.8530
X/CML				
.050	-.1923	-.7079	-.6023	-.6683
.230	-.1801	-.0572	-.1100	-.1212
.410	-.1659	-.0532	-.0491	-.0704
.590	-.1445	-.0623	-.0512	-.0410
.770	-.1445	-.0786	-.0704	-.0430
.950	-.1659	-.1110	-.0836	-.0847

OA163B MAIN GEAR DOOR OUTER SURFACE (RFPM09)

BETA (7) = 5.020 ALPHA (4) = 6.200 Q(PSF) = 42.877 PO = 2113.0 RUN NO = 81.000

SECTION (1)MAIN LND GR DR-O DEPENDENT VARIABLE CP

Y/BML	.0380	.3100	.5820	.8530
X/CML				
.050	-.1873	-.6017	-.5249	-.5420
.230	-.2379	-.0317	-.0762	-.0671
.410	-.1803	-.0247	-.0166	-.0115
.590	-.1560	-.0307	-.0065	.0046
.770	-.1479	-.0499	-.0267	-.0024
.950	-.1631	-.0823	-.0479	-.0570

OA163B MAIN GEAR DOOR OUTER SURFACE (RFPM10) (27 APR 77)

REFERENCE DATA

SREF = 2690.0000 SQ.FT. XMRP = 1076.7000 IN. XO
LREF = 474.8100 INCHES YMRP = .0000 IN. YO
BREF = 936.6800 INCHES ZMRP = 375.0000 IN. ZO
SCALE = .0405

PARAMETRIC DATA

SPDBRK =	25.000	BDFLAP =	.000
ELV-L =	.000	ELV-R =	.000
PHI-N =	66.000	THETAN =	108.000
PHI-ML =	32.200	THETML =	5.000
PHI-MR =	26.000	THETMR =	4.000

BETA (1) = -5.030 ALPHA (1) = .000 Q(PSF) = 42.882 PO = 2112.3 RUN NO = 83.000

SECTION (1)MAIN LND GR DR-O DEPENDENT VARIABLE CP

Y/BML	.0380	.3100	.5820	.8530
X/CML				
.050	-.7392	-.6735	-.8231	-.1914
.230	-.1207	-.1187	-.1207	-.2137
.410	-.1328	-.1247	-.1389	-.1732
.590	-.1490	-.1429	-.1469	-.1449
.770	-.1631	-.1631	-.1732	-.2035
.950	-.1854	-.1955	-.1773	-.1773

BETA (1) = -5.040 ALPHA (2) = 2.080 Q(PSF) = 42.882 PO = 2112.3 RUN NO = 83.000

SECTION (1)MAIN LND GR DR-O DEPENDENT VARIABLE CP

Y/BML	.0380	.3100	.5820	.8530
X/CML				
.050	-.7208	-.6024	-.6945	-.1289
.230	-.0702	-.0743	-.0500	-.1532
.410	-.0884	-.0773	-.0803	-.1127
.590	-.1036	-.0965	-.0955	-.0864
.770	-.1208	-.1178	-.1269	-.1542
.950	-.1461	-.1532	-.1340	-.1360

BETA (1) = -5.040 ALPHA (3) = 4.160 Q(PSF) = 42.882 PO = 2112.3 RUN NO = 83.000

SECTION (1)MAIN LND GR DR-O DEPENDENT VARIABLE CP

Y/BML	.0380	.3100	.5820	.8530
X/CML				
.050	-.6654	-.5339	-.5875	-.1715
.230	-.0318	-.0348	.0025	-.0905
.410	-.0439	-.0298	-.0298	-.0571
.590	-.0601	-.0500	-.0449	-.0348
.770	-.0794	-.0753	-.0794	-.1057
.950	-.1047	-.1117	-.0925	-.0895

OA163B MAIN GEAR DOOR OUTER SURFACE (RF = 0)

BETA (1) = -5.040 ALPHA (4) = 6.210 Q(PSF) = 42.88 PO = 2112.3 RUN NO = 83.000

SECTION (1)MAIN LND GR DR-O DEPENDENT VARIABLE CP

Y/BML	.0380	.3100	.5820	.8530
X/CML				
.050	-.5647	-.4720	-.4941	-.2977
.230	.0086	.0066	.0257	-.0387
.410	.0035	.0197	.0317	.0176
.590	-.0175	-.0044	.0055	.0227
.770	-.0367	-.0316	-.0326	-.0558
.950	-.0609	-.0659	-.0468	-.0488

BETA (2) = -2.020 ALPHA (1) = .000 Q(PSF) = 42.93 PO = 2112.3 RUN NO = 84.000

SECTION (1)MAIN LND GR DR-O DEPENDENT VARIABLE CP

Y/BML	.0380	.3100	.5820	.8530
X/CML				
.050	-.8167	-.6585	-.7381	-.3007
.230	-.1062	-.1506	-.1062	-.2211
.410	-.1102	-.1113	-.1284	-.2050
.590	-.1284	-.1324	-.1455	-.1667
.770	-.1425	-.1526	-.1637	-.1758
.950	-.1657	-.1838	-.1667	-.1516

BETA (2) = -2.020 ALPHA (2) = 2.070 Q(PSF) = 42.93 PO = 2112.3 RUN NO = 84.000

SECTION (1)MAIN LND GR DR-O DEPENDENT VARIABLE CP

Y/BML	.0380	.3100	.5820	.8530
X/CML				
.050	-.7435	-.6035	-.6488	-.4112
.230	-.0739	-.1162	-.0840	-.1675
.410	-.0719	-.0679	-.0729	-.1373
.590	-.0890	-.0910	-.0971	-.1011
.770	-.1051	-.1132	-.1182	-.1313
.950	-.1313	-.1464	-.1273	-.1152

OA163B MAIN GEAR DOOR OUTER SURFACE (RFPM10)

BETA (2) = -2.010 ALPHA (3) = 4.120 Q(PSF) = 42.935 PO = 2112.3 RUN NO = 84.000

SECTION (1)MAIN LND GR DR-O DEPENDENT VARIABLE CP

Y/BML	.0380	.3100	.5820	.8530
X/CML				
.050	-.6457	-.5556	-.5647	-.4755
.230	-.0379	-.0744	-.0814	-.1078
.410	-.0318	-.0186	-.0227	-.0662
.590	-.0500	-.0450	-.0450	-.0389
.770	-.0662	-.0703	-.0733	-.0855
.950	-.0936	-.1068	-.0835	-.0733

BETA (2) = -2.010 ALPHA (4) = 6.200 Q(PSF) = 42.935 PO = 2112.3 RUN NO = 84.000

SECTION (1)MAIN LND GR DR-O DEPENDENT VARIABLE CP

Y/BML	.0380	.3100	.5820	.8530
X/CML				
.050	-.5103	-.5012	-.4820	-.5173
.230	-.0075	-.0166	-.0711	-.0479
.410	.0035	.0258	.0237	.0015
.590	-.0115	-.0004	.0066	.0187
.770	-.0277	-.0277	-.0226	-.0337
.950	-.0549	-.0670	-.0398	-.0337

BETA (3) = -.990 ALPHA (1) = .000 Q(PSF) = 42.877 PO = 2112.3 RUN NO = 85.000

SECTION (1)MAIN LND GR DR-O DEPENDENT VARIABLE CP

Y/BML	.0380	.3100	.5820	.8530
X/CML				
.050	-.8224	-.6679	-.7315	-.4124
.230	-.1064	-.1700	-.1226	-.2347
.410	-.1074	-.1115	-.1256	-.2024
.590	-.1256	-.1327	-.1448	-.1650
.770	-.1387	-.1509	-.1630	-.1690
.950	-.1650	-.1822	-.1660	-.1488

OA163B MAIN GEAR DOOR OUTER SURFACE (RFPM10)

BETA (3) = -.990 ALPHA (2) = 2.070 Q(PSF) = 42.377 PO = 2112.3 RUN NO = 85.000

SECTION (1)MAIN LND GR DR-O DEPENDENT VARIABLE CP

Y/BML	.0380	.3100	.5820	.8530
X/CML				
.050	-.7394	-.6211	-.6413	-.4846
.230	-.0752	-.1318	-.1126	-.1753
.410	-.0702	-.0631	-.0742	-.1349
.590	-.0883	-.0873	-.0944	-.1005
.770	-.1025	-.1106	-.1177	-.1258
.950	-.1288	-.1450	-.1258	-.1126

BETA (3) = -.990 ALPHA (3) = 4.130 Q(PSF) = 42.377 PO = 2112.3 RUN NO = 85.000

SECTION (1)MAIN LND GR DR-O DEPENDENT VARIABLE CP

Y/BML	.0380	.3100	.5820	.8530
X/CML				
.050	-.6307	-.5700	-.5690	-.5487
.230	-.0449	-.0773	-.1147	-.1157
.410	-.0358	-.0156	-.0247	-.0743
.590	-.0510	-.0449	-.0419	-.0419
.770	-.0672	-.0722	-.0672	-.0793
.950	-.0945	-.1076	-.0793	-.0712

BETA (3) = -1.000 ALPHA (4) = 6.220 Q(PSF) = 42.877 PO = 2112.3 RUN NO = 85.000

SECTION (1)MAIN LND GR DR-O DEPENDENT VARIABLE CP

Y/BML	.0380	.3100	.5820	.8530
X/CML				
.050	-.5027	-.5169	-.4795	-.5634
.230	-.0196	-.0196	-.0934	-.0530
.410	-.0115	.0258	.0227	-.0034
.590	-.0206	-.0024	.0066	.0157
.770	-.0368	-.0297	-.0216	-.0236
.950	-.0681	-.0701	-.0398	-.0297

OA1638 MAIN GEAR DOOR OUTER SURFACE (RFPM10)

BETA (4) = -.010 ALPHA (1) = .000 Q(PSF) = 42.392 PO = 2112.3 RUN NO = 86.000

SECTION (1)MAIN LND GR DR-O DEPENDENT VARIABLE CP

Y/BML	.0380	.3100	.5820	.8530
X/CML				
.050	-.8199	-.6734	-.7168	-.4955
.230	-.1085	-.1793	-.1479	-.2439
.410	-.1056	-.1055	-.1196	-.2035
.590	-.1227	-.1287	-.1429	-.1601
.770	-.1369	-.1489	-.1601	-.1651
.950	-.1621	-.1793	-.1631	-.1469

BETA (4) = -.010 ALPHA (2) = 2.060 Q(PSF) = 42.392 PO = 2112.3 RUN NO = 86.000

SECTION (1)MAIN LND GR DR-O DEPENDENT VARIABLE CP

Y/BML	.0380	.3100	5820	.8530
X/CML				
.050	-.7193	-.6293	-.6273	-.5302
.230	-.0923	-.1349	-.1490	-.1784
.410	-.0742	-.0601	-.0752	-.1379
.590	-.0884	-.0884	-.0985	-.0985
.770	-.1035	-.1106	-.1167	-.1157
.950	-.1308	-.1440	-.1217	-.1056

BETA (4) = -.010 ALPHA (3) = 4.120 Q(PSF) = 42.392 PO = 2112.3 RUN NO = 86.000

SECTION (1)MAIN LND GR DR-O DEPENDENT VARIABLE CP

Y/BML	.0380	.3100	.5820	.8530
X/CML				
.050	-.6088	-.5845	-.5654	-.5724
.230	-.0589	-.0851	-.1376	-.1184
.410	-.0503	-.0165	.0226	-.0730
.590	-.0640	-.0448	-.0418	-.0448
.770	-.0781	-.0690	-.0680	-.0720
.950	-.1063	-.1073	-.0781	-.0670

OA163B MAIN GEAR DOOR OUTER SURFACE (RFPM10)

BETA (4) = -.010 ALPHA (4) = 6.190 Q(PSF) = 42.892 PO = 2112.3 RUN NO = 86.000

SECTION (1)MAIN LND GR DR-O DEPENDENT VARIABLE CP

Y/BML	.0380	.3100	.5820	.8530
X/CML				
.050	-.5030	-.5283	-.4848	-.5940
.230	-.0328	-.0378	-.1116	-.0651
.410	-.0489	.0217	.0238	-.0095
.590	-.0500	-.0055	.0066	.0137
.770	-.0591	-.0317	-.0226	-.0176
.950	-.0843	-.0702	-.0388	-.0287

BETA (5) = .990 ALPHA (1) = .000 Q(PSF) = 42.987 PO = 2112.3 RUN NO = 87.000

SECTION (1)MAIN LND GR OR-O DEPENDENT VARIABLE CP

Y/BML	.0380	.3100	.5820	.8530
X/CML				
.050	-.8029	-.6846	-.7129	-.5553
.230	-.1156	-.1884	-.1833	-.2409
.410	-.1085	-.1005	-.1187	-.2015
.590	-.1257	-.1257	-.1379	-.1611
.770	-.1399	-.1459	-.1550	-.1511
.950	-.1662	-.1773	-.1601	-.1459

BETA (5) = .990 ALPHA (2) = 2.060 Q(PSF) = 42.887 PO = 2112.3 RUN NO = 87.000

SECTION (1)MAIN LND GR OR-O DEPENDENT VARIABLE CP

Y/BML	.0380	.3100	.5820	.8530
X/CML				
.050	-.5966	-.6441	-.6380	-.5552
.230	-.0954	-.1388	-.1671	-.1752
.410	-.0893	-.0590	-.0711	-.1388
.590	-.1014	-.0863	-.0913	-.1014
.770	-.1176	-.1085	-.1105	-.1146
.950	-.1419	-.1419	-.1186	-.1014

OA163B MAIN GEAR DOOR OUTER SURFACE (RFPM10)

BETA (5) = .990 ALPHA (3) = 4.120 Q(PSF) = 42.987 PO = 2112.3 RUN NO = 87.000

SECTION (1)MAIN LND GR DR-O DEPENDENT VARIABLE CP

Y/BML	.0380	.3100	.5820	.8530
X/CML				
.050	-.5968	-.5917	-.5603	-.5998
.230	-.0713	-.0844	-.1513	-.1249
.410	-.0865	-.0166	-.0247	-.0733
.590	-.0895	-.0449	-.0419	-.0409
.770	-.0976	-.0713	-.0662	-.0601
.950	-.1209	-.1067	-.0763	-.0662

BETA (5) = .990 ALPHA (4) = 6.190 Q(PSF) = 42.887 PO = 2112.3 RUN NO = 87.000

SECTION (1)MAIN LND GR DR-O DEPENDENT VARIABLE CP

Y/BML	.0380	.3100	.5820	.8530
X/CML				
.050	-.4965	-.5358	-.4864	-.6215
.230	-.0498	-.0518	-.1335	-.0760
.410	-.0922	.0156	.0207	-.0165
.590	-.0780	-.0075	.0056	.0136
.770	-.0760	-.0327	-.0236	-.0085
.950	-.0982	-.0720	-.0397	-.0347

BETA (6) = 1.990 ALPHA (1) = .000 Q(PSF) = 42.840 PO = 2112.3 RUN NO = 88.000

SECTION (1)MAIN LND GR DR-O DEPENDENT VARIABLE CP

Y/BML	.0380	.3100	.5820	.8530
X/CML				
.050	-.7769	-.6942	-.7103	-.5691
.230	-.1254	-.1839	-.2011	-.2354
.410	-.1204	-.0982	-.1154	-.2001
.590	-.1375	-.1244	-.1355	-.1607
.770	-.1496	-.1426	-.1527	-.1557
.950	-.1759	-.1769	-.1557	-.1416

OA163B MAIN GEAR DOOR OUTER SURFACE (RFPM10)

BETA (6) = 1.990 ALPHA (2) = 2.070 Q(PSF) = 42.840 PO = 2112.3 RUN NO = 88.000

SECTION (1)MAIN LND GR DR-O DEPENDENT VARIABLE CP

Y/BML	.0380	.3100	.5820	.8530
X/CML				
.050	-.6921	-.6536	-.6424	-.5866
.230	-.1069	-.1383	-.1860	-.1759
.410	-.1211	-.0582	-.0684	-.1393
.590	-.1282	-.0856	-.0876	-.0998
.770	-.1353	-.1089	-.1059	-.1069
.950	-.1586	-.1434	-.1140	-.0978

BETA (6) = 1.990 ALPHA (3) = 4.120 Q(PSF) = 42.840 PO = 2112.3 RUN NO = 88.000

SECTION (1)MAIN LND GR DR-O DEPENDENT VARIABLE CP

Y/BML	.0380	.3100	.5820	.8530
X/CML				
.050	-.5919	-.6010	-.5625	-.6060
.230	-.0855	-.0956	-.1614	-.1250
.410	-.1300	-.0207	-.0217	-.0774
.590	-.1159	-.0460	-.0389	-.0409
.770	-.1138	-.0713	-.0632	-.0470
.950	-.1371	-.1057	-.0753	-.0693

BETA (6) = 1.990 ALPHA (4) = 6.220 Q(PSF) = 42.840 PO = 2112.3 RUN NO = 88.000

SECTION (1)MAIN LND GR DR-O DEPENDENT VARIABLE CP

Y/BML	.0380	.3100	.5820	.8530
X/CML				
.050	-.4696	-.5546	-.4787	-.6466
.230	-.0793	-.0661	-.1531	-.0944
.410	-.1197	.0116	.0177	-.0186
.590	-.0955	-.0115	.0076	.0177
.770	-.0944	-.0368	-.0237	-.0004
.950	-.1167	-.0793	-.0409	-.0419

OA163B MAIN GEAR DOOR OUTER SURFACE (RFPM10)

BETA (7) = 5.020 ALPHA (1) = .000 Q(PSF) = 42.755 PO = 2112.3 RUN NO = 89.000

SECTION (1)MAIN LND GR DR-O DEPENDENT VARIABLE (P

Y/BML	.0380	.3100	.5820	.8530
X/CML				
.050	-.5912	-.7349	-.7187	-.5427
.230	-.1663	-.1451	-.2139	-.2199
.410	-.1946	-.0975	-.1117	-.1855
.590	-.1835	-.1259	-.1279	-.1501
.770	-.1805	-.1420	-.1410	-.1309
.950	-.2007	-.1744	-.1451	-.1329

BETA (7) = 5.020 ALPHA (2) = 2.060 Q(PSF) = 42.755 PO = 2112.3 RUN NO = 89.000

SECTION (1)MAIN LND GR DR-O DEPENDENT VARIABLE (P

Y/BML	.0380	.3100	.5820	.8530
X/CML				
.050	-.2326	-.7487	-.6321	-.6848
.230	-.1799	-.0856	-.1748	-.1667
.410	-.1870	-.0775	-.0734	-.1261
.590	-.1657	-.0927	-.0876	-.0886
.770	-.1606	-.1109	-.1059	-.0815
.950	-.1819	-.1474	-.1160	-.1069

BETA (7) = 5.020 ALPHA (3) = 4.120 Q(PSF) = 42.755 PO = 2112.3 RUN NO = 89.000

SECTION (1)MAIN LND GR DR-O DEPENDENT VARIABLE (P

Y/BML	.0380	.3100	.5820	.8530
X/CML				
.050	-.1898	-.7096	-.6022	-.6670
.230	-.1949	-.0581	-.1159	-.1189
.410	-.1848	-.0551	-.0511	-.0723
.590	-.1544	-.0612	-.0521	-.0440
.770	-.1453	-.0744	-.0703	-.0440
.950	-.1615	-.1058	-.0835	-.0845

OA163B MAIN GEAF DOOR OUTER SURFACE (RFPM10)

BETA (7) = 5.020 ALPHA (4) = 6.200 Q(PSF) = 42.755 PO = 2112.3 RUN NO = 89.000

SECTION (1)MAIN LND GR DR-O DEPENDENT VARIABLE CP

Y/BML	.0380	.3100	.5820	.8530
X/CML				
.050	-.1863	-.6232	-.5257	-.5368
.230	-.2320	-.0299	-.0705	-.0675
.410	-.1843	-.0238	-.0095	-.0156
.590	-.1579	-.0329	-.0116	.0036
.770	-.1487	-.0502	-.0370	-.0065
.950	-.1630	-.0807	-.0542	-.0593

OA163B MAIN GEAR DOOR OUTER SURFACE (RFPM11) (27 APR 77)

REFERENCE DATA

SREF =	2690.0000 SQ.FT.	XMRP =	1076.7000 IN.	XO	
LREF =	474.8100 INCHES	YMRP =	.0000 IN.	YO	
BREF =	936.6800 INCHES	ZMRP =	375.0000 IN.	ZO	
SCALE =	.0405				

PARAMETRIC DATA

SPDBRK =	25.000	BDFLAP =	.000
ELV-L =	.000	ELV-R =	.000
PHI-N =	66.000	THETAN =	108.000
PHI-ML =	88.000	THETML =	98.000
PHI-MR =	32.200	THETMR =	5.000

BETA (1) = -5.030 ALPHA (1) = .000 Q(PSF) = 42.830 PO = 2113.1 RUN NO = 90.000

SECTION (1)MAIN LND GR DR-O DEPENDENT VARIABLE CP

Y/BML	.0380	.3100	.5820	.8530
X/CML				
.050	-.5108	-.5309	-.4694	.0499
.230	-.0740	-.0589	-.0932	-.1588
.410	-.0801	-.1003	-.1335	-.2082
.590	-.0841	-.1345	-.1769	-.2465
.770	-.1527	-.1920	-.2213	-.2304
.950	-.2415	-.2586	-.2445	-.2253

BETA (1) = -5.030 ALPHA (2) = 2.050 Q(PSF) = 42.830 PO = 2113.1 RUN NO = 90.000

SECTION (1)MAIN LND GR DR-O DEPENDENT VARIABLE CP

Y/BML	.0380	.3100	.5820	.8530
X/CML				
.050	-.5117	-.4489	-.5613	.0613
.230	-.0065	-.0034	-.0206	-.1118
.410	-.0227	-.0439	-.0723	-.1523
.590	-.0402	-.0865	-.1219	-.1867
.770	-.1189	-.1502	-.1806	-.1988
.950	-.2140	-.2242	-.2120	-.2059

BETA (1) = -5.030 ALPHA (3) = 4.130 Q(PSF) = 42.830 PO = 2113.1 RUN NO = 90.000

SECTION (1)MAIN LND GR DR-O DEPENDENT VARIABLE CP

Y/BML	.0380	.3100	.5820	.8530
X/CML				
.050	-.4586	-.3826	-.4637	.0786
.230	.0309	.0228	.0573	-.0937
.410	.0269	.0086	-.0055	-.0886
.590	.0025	-.0369	-.0572	-.0886
.770	-.0896	-.1089	-.1352	-.1667
.950	-.1879	-.1859	-.1808	-.1890

OA163B MAIN GEAR DOOR OUTER SURFACE (RFPM11)

BETA (1) = -5.030 ALPHA (4) = 6.190 Q(PSF) = 42.930 PO = 2113.1 RUN NO = 90.000

SECTION (1)MAIN LND GR DR-O DEPENDENT VARIABLE CP

Y/BML	.0380	.3100	.5820	.8530
X/CML				
.050	-.4298	-.3458	-.3792	-.0277
.230	.0562	.0238	.0775	-.0642
.410	.0593	.0653	.0572	-.0409
.590	.0228	.0117	-.0024	-.0196
.770	-.1118	-.0662	-.0814	-.1027
.950	-.2313	-.1462	-.1341	-.1422

BETA (2) = -2.010 ALPHA (1) = .000 Q(PSF) = 42.847 PO = 2113.0 RUN NO = 91.000

SECTION (1)MAIN LND GR DR-O DEPENDENT VARIABLE CP

Y/BML	.0380	.3100	.5820	.8530
X/CML				
.050	-.6639	-.5308	-.6800	-.0357
.230	-.0438	-.0740	-.0871	-.2001
.410	-.0619	-.0992	-.1365	-.2515
.590	-.0912	-.1466	-.1910	-.2696
.770	-.1970	-.2142	-.2595	-.3221
.950	-.3029	-.2848	-.2898	-.2898

BETA (2) = -2.010 ALPHA (2) = 2.060 Q(PSF) = 42.847 PO = 2113.0 RUN NO = 91.000

SECTION (1)MAIN LND GR DR-O DEPENDENT VARIABLE CP

Y/BML	.0380	.3100	.5820	.8530
X/CML				
.050	-.6430	-.4818	-.5669	-.0227
.230	-.0146	-.0713	-.0186	-.1889
.410	-.0247	-.0450	-.0784	-.1990
.590	-.0703	-.1018	-.1352	-.1950
.770	-.2234	-.1757	-.2142	-.2710
.950	-.3379	-.2507	-.2517	-.2507

OA163B MAIN GEAR DOOR OUTER SURFACE (RFPM11)

BETA (2) = -2.010 ALPHA (3) = 4.100 Q(PSF) = 42.847 PO = 2113.0 RUN NO = 91.000

SECTION (1)MAIN LND GR DR-O DEPENDENT VARIABLE CP

Y/BML	.0380	.3100	.5820	.8530
X/CML				
.050	-.6167	-.4518	-.4993	-.2038
.230	-.0085	-.0864	-.0237	-.1603
.410	-.0419	.0056	-.0217	-.1482
.590	-.1016	-.0540	-.0763	-.1158
.770	-.2483	-.1360	-.1583	-.2018
.950	-.3323	-.2139	-.2048	-.1988

BETA (2) = -2.000 ALPHA (4) = 6.170 Q(PSF) = 42.847 PO = 2113.0 RUN NO = 91.000

SECTION (1)MAIN LND GR DR-O DEPENDENT VARIABLE CP

Y/BML	.0380	.3100	.5820	.8530
X/CML				
.050	-.5823	-.4365	-.4649	-.4355
.230	-.0389	-.1046	-.0824	-.1805
.410	-.1107	.0460	.0349	-.1016
.590	-.1390	-.0146	-.0206	-.0449
.770	-.2412	-.0975	-.1026	-.1411
.950	-.3161	-.1815	-.1562	-.1653

BETA (3) = -1.000 ALPHA (1) = -.020 Q(PSF) = 42.940 PO = 2113.0 RUN NO = 92.000

SECTION (1)MAIN LND GR DR-O DEPENDENT VARIABLE CP

Y/BML	.0380	.3100	.5820	.8530
X/CML				
.050	-.6947	-.5384	-.6686	-.0635
.230	-.0445	-.0966	-.0815	-.2298
.410	-.0615	-.0996	-.1397	-.2659
.590	-.1036	-.1487	-.1948	-.2779
.770	-.2368	-.2188	-.2689	-.3320
.950	-.3521	-.2909	-.3970	-.2919

OA163B MAIN GEAR DOOR OUTER SURFACE (RFPM11)

BETA (3) = -1.010 ALPHA (2) = 2.030 Q(PSF) = 42.940 PO = 2113.0 RUN NO = 92.000

SECTION (1)MAIN LND GR DR-O DEPENDENT VARIABLE CP

Y/BML	.0380	.3100	.5820	.8530
X/CML				
.050	-.6771	-.5102	-.5749	-.0975
.230	-.0297	-.1127	-.0439	-.2108
.410	-.0469	-.0459	-.0803	-.2199
.590	-.1137	-.1086	-.1400	-.1966
.770	-.2775	-.1845	-.2199	-.2694
.950	-.3696	-.2593	-.2583	-.2482

BETA (3) = -1.010 ALPHA (3) = 4.110 Q(PSF) = 42.940 PO = 2113.0 RUN NO = 92.000

SECTION (1)MAIN LND GR DR-O DEPENDENT VARIABLE CP

Y/BML	.0380	.3100	.5820	.8530
X/CML				
.050	-.6426	-.4909	-.5213	-.3473
.230	-.0398	-.1268	-.0823	-.2067
.410	-.1076	-.0004	-.0267	-.1673
.590	-.1541	-.0651	-.0823	-.1127
.770	-.2826	-.1450	-.1622	-.2088
.950	-.3595	-.2239	-.2108	-.2057

BETA (3) = -1.010 ALPHA (4) = 6.170 Q(PSF) = 42.940 PO = 2113.0 RUN NO = 92.000

SECTION (1)MAIN LND GR DR-O DEPENDENT VARIABLE CP

Y/BML	.0380	.3100	.5820	.8530
X/CML				
.050	-.5988	-.4712	-.5036	-.5644
.230	-.1209	-.1432	-.1290	-.2383
.410	-.1695	.0339	.0228	-.1289
.590	-.1867	-.0267	-.0267	-.0490
.770	-.2768	-.1118	-.1108	-.1452
.950	-.3457	-.1907	-.1664	-.1695

OA1639 MAIN GEAR DOOR OUTER SURFACE (RFPM11)

BETA (4) = .010 ALPHA (1) = -.030 Q(PSF) = 42.855 PO = 2113.0 RUN NO = 93.000

SECTION (1)MAIN LND GR DR-O DEPENDENT VARIABLE CP

Y/BML	.0380	.3100	.5820	.8530
X/CML				
.050	-.7334	-.5567	-.6667	-.0682
.230	-.0509	-.1316	-.0852	-.2639
.410	-.0701	-.0983	-.1459	-.2912
.590	-.1286	-.1559	-.2023	-.2740
.770	-.2952	-.2296	-.2760	-.3356
.950	-.3992	-.3003	-.3053	-.2932

BETA (4) = .010 ALPHA (2) = 2.030 Q(PSF) = 42.855 PO = 2113.0 RUN NO = 93.000

SECTION (1)MAIN LND GR DR-O DEPENDENT VARIABLE CP

Y/BML	.0380	.3100	.5820	.8530
X/CML				
.050	-.7065	-.5386	-.5902	-.2240
.230	-.0510	-.1572	-.0834	-.2361
.410	-.0975	-.0490	-.0874	-.2351
.590	-.1633	-.1147	-.1461	-.1926
.770	-.3120	-.1946	-.2250	-.2695
.950	-.3980	-.2705	-.2654	-.2482

BETA (4) = .010 ALPHA (3) = 4.100 Q(PSF) = 42.855 PO = 2113.0 RUN NO = 93.000

SECTION (1)MAIN LND GR DR-O DEPENDENT VARIABLE CP

Y/BML	.0380	.3100	.5820	.8530
X/CML				
.050	-.6606	-.5312	-.5484	-.4877
.230	-.1005	-.1753	-.1460	-.2602
.410	-.1763	-.0105	-.0348	-.1895
.590	-.2087	-.0742	-.0904	-.1167
.770	-.3209	-.1612	-.1682	-.2107
.950	-.3937	-.2400	-.2188	-.2158

OA163B MAIN GEAR DOOR OUTER SURFACE (RFPM11)

BETA (4) = .010 ALPHA (4) = 6.170 Q(PSF) = 42.855 PO = 2113.0 RUN NO = 93.000

SECTION (1)MAIN LND GR DR-O DEPENDENT VARIABLE CP

Y/BML	.0380	.3100	.5820	.8530
X/CML				
.050	-.6213	-.5089	-.5423	-.6598
.230	-.2516	-.1797	-.1706	-.2769
.410	-.2364	.0187	.0096	-.1513
.590	-.2293	-.0399	-.0348	-.0521
.770	-.3063	-.1230	-.1098	-.1412
.950	-.3691	-.1979	-.1625	-.1584

BETA (5) = 1.010 ALPHA (1) = -.030 Q(PSF) = 42.927 PO = 2113.1 RUN NO = 94.000

SECTION (1)MAIN LND GR DR-O DEPENDENT VARIABLE CP

Y/BML	.0380	.3100	.5820	.8530
X/CML				
.050	-.7589	-.5828	-.6653	-.1402
.230	-.0638	-.1734	-.1030	-.2881
.410	-.0990	-.1000	-.1473	-.3072
.590	-.1704	-.1613	-.2056	-.2720
.770	-.3384	-.2368	-.2780	-.3344
.950	-.4299	-.3102	-.3112	-.2941

BETA (5) = 1.010 ALPHA (2) = 2.060 Q(PSF) = 42.927 PO = 2113.1 RUN NO = 94.000

SECTION (1)MAIN LND GR DR-O DEPENDENT VARIABLE CP

Y/BML	.0380	.3100	.5820	.8530
X/CML				
.050	-.7215	-.5761	-.6084	-.3781
.230	-.0903	-.1963	-.1368	-.2852
.410	-.1681	-.0570	-.0933	-.2529
.590	-.2155	-.1196	-.1509	-.1873
.770	-.3539	-.2054	-.2266	-.2741
.950	-.4307	-.2812	-.2681	-.2509

OA163B MAIN GEAR DOOR OUTER SURFACE (RFPM11)

BETA (5) = 1.010 ALPHA (3) = 4.100 Q(PSF) = 42 927 PO = 2113.1 RUN NO = 94.000

SECTION (1)MAIN LND GR DR-O DEPENDENT VARIABLE CP

Y/BML	0380	.3100	.5820	.8530
X/CML				
.050	-.6811	-.5630	-.5781	-.6185
.230	-.1943	-.2125	-.2024	-.3236
.410	-.2357	-.0246	-.0458	-.2115
.590	-.2549	-.0873	-.0953	-.1226
.770	-.3499	-.1701	-.1751	-.2125
.950	-.4195	-.2489	-.2246	-.2226

BETA (5) = 1.010 ALPHA (4) = 6.190 Q(PSF) = 42.927 PO = 2113.1 RUN NO = 94.000

SECTION (1)MAIN LND GR DR-O DEPENDENT VARIABLE CP

Y/BML	.0380	.3100	.5820	.8530
X/CML				
.050	-.6320	-.5349	-.5865	-.6989
.230	-.4509	-.2190	-.1897	-.3152
.410	-.3021	.0015	-.0024	-.1715
.590	-.2747	-.0541	-.0419	-.0490
.770	-.3395	-.1340	-.1158	-.1441
.950	-.3982	-.2110	-.1694	-.1654

BETA (6) = 1.990 ALPHA (1) = .000 Q(PSF) = 42.897 PO = 2113.0 RUN NO = 95.000

SECTION (1)MAIN LND GR DR-O DEPENDENT VARIABLE CP

Y/BML	.0380	.3100	.5820	.8530
X/CML				
.050	-.7806	-.6189	-.6802	-.2464
.230	-.0878	-.2183	-.1480	-.3127
.410	-.1490	-.1048	-.1550	-.3137
.590	-.2203	-.1701	-.2133	-.2675
.770	-.3779	-.2504	-.2856	-.3317
.950	-.4603	-.3197	-.3187	-.2946

OA163B MAIN GEAR DOOR OUTER SURFACE (RFPM11)

BETA (6) = 1.990 ALPHA (2) = 2.030 Q(PSF) = 42.897 PO = 2113.0 RUN NO = 95.000

SECTION (1)MAIN LND GR DR-O DEPENDENT VARIABLE CP

Y/BML	.0380	.3100	.5820	.8530
X/CML				
.050	-.7419	-.6114	-.6255	-.5173
.230	-.1501	-.2361	-.2037	-.3372
.410	-.2300	-.0641	-.1005	-.2745
.590	-.2654	-.1329	-.1521	-.1855
.770	-.3838	-.2159	-.2300	-.2745
.950	-.4586	-.2907	-.2755	-.2644

BETA (6) = 2.000 ALPHA (3) = 4.110 Q(PSF) = 42.897 PO = 2113.0 RUN NO = 95.000

SECTION (1)MAIN LND GR DR-O DEPENDENT VARIABLE CP

Y/BML	.0380	.3100	.5820	.8530
X/CML				
.050	-.7125	-.5990	-.5152	-.7175
.230	-.3357	-.2506	-.2465	-.3620
.410	-.3043	-.0379	-.0551	-.2313
.590	-.2992	-.0987	-.0987	-.1199
.770	-.3792	-.1807	-.1756	-.2121
.950	-.4451	-.2577	-.2283	-.2253

BETA (6) = 2.000 ALPHA (4) = 6.180 Q(PSF) = 42.897 PO = 2113.0 RUN NO = 95.000

SECTION (1)MAIN LND GR DR-O DEPENDENT VARIABLE CP

Y/BML	.0380	.3100	.5820	.8530
X/CML				
.050	-.6150	-.5421	-.6484	-.7456
.230	-.6770	-.2687	-.2191	-.3740
.410	-.3740	-.0136	-.0136	-.1897
.590	-.3193	-.0662	-.0480	-.0460
.770	-.3700	-.1462	-.1209	-.1452
.950	-.4236	-.2242	-.1746	-.1634

C-3

OA163B MAIN GEAR DOOR OUTER SURFACE (RFPM11)

BETA (7) = 5.040 ALPHA (1) = -.020 Q(PSF) = 42.875 PO = 2113.1 RUN NO = 96.000

SECTION (1)MAIN LND GR DR-O DEPENDENT VARIABLE CP

Y/BML	.0380	.3100	.5820	.8530
X/CML				
.050	-.8577	-.7240	-.7190	-.6647
.230	-.2969	-.3361	-.3109	-.4587
.410	-.3521	-.1310	-.1712	-.3612
.590	-.3712	-.1924	-.2175	-.2547
.770	-.4647	-.2697	-.2878	-.3280
.950	-.5401	-.3411	-.3260	-.3099

BETA (7) = 5.030 ALPHA (2) = 2.050 Q(PSF) = 42.875 PO = 2113.1 RUN NO = 96.000

SECTION (1)MAIN LND GR DR-O DEPENDENT VARIABLE CP

Y/BML	.0380	.3100	.5820	.8530
X/CML				
.050	-.8332	-.7149	-.7271	-.8251
.230	-.6280	-.3430	-.3349	-.4643
.410	-.4188	-.0994	-.1186	-.3147
.590	-.3834	-.1591	-.1591	-.1793
.770	-.4512	-.2379	-.2298	-.2622
.950	-.5148	-.3076	-.2733	-.2551

BETA (7) = 5.030 ALPHA (3) = 4.100 Q(PSF) = 42.875 PO = 2113.1 RUN NO = 96.000

SECTION (1)MAIN LND GR DR-O DEPENDENT VARIABLE CP

Y/BML	.0380	.3100	.5820	.8530
X/CML				
.050	-.7237	-.6568	-.7582	-.8607
.230	-.9783	-.3544	-.3169	-.4691
.410	-.4985	-.0724	-.0775	-.2723
.590	-.4072	-.1292	-.1140	-.1160
.770	-.4468	-.2094	-.1810	-.2063
.950	-.4975	-.2794	-.2246	-.2063

OA163B MAIN GEAR DOOR OUTER SURFACE (RFPM11)

BETA (7) = 5.030 ALPHA (4) = 6.190 Q(PSF) = 42.875 PO = 2113.1 RUN NO = 96.000

SECTION (1)MAIN LND GR DR-O DEPENDENT VARIABLE CP

Y/BML	.0380	.3100	.5829	.8530
X/CML				
.050	-.5323	-.5900	-.7613	-.7754
.230	-.9071	-.4482	-.3611	-.4300
.410	-.5546	-.0450	-.0470	-.2243
.590	-.4208	-.0966	-.0733	-.0723
.770	-.4259	-.2000	-.1392	-.1605
.950	-.4593	-.2800	-.1777	-.1473

OA163B MAIN GEAR DOOR OUTER SURFACE (RFPM12) (27 APR 77)

REFERENCE DATA

SREF =	2690.0000 SQ.FT.	XMRP =	1076.7000 IN. XO		
LREF =	474.8100 INCHES	YMRP =	.0000 IN. YO		
BREF =	936.6800 INCHES	ZMRP =	375.0000 IN. ZO		
SCALE =	.0405				

PARAMETRIC DATA

SPDBRK =	25.000	BDFLAP =	.000
ELV-L =	5.000	ELV-R =	5.000
PHI-N =	30.800	THETAN =	5.000
PHI-ML =	32.200	THETML =	5.000
PHI-MR =	32.200	THETMR =	5.000

ALPHA (1) = 4.180 BETA (1) = -5.050 Q(PSF) = 42.851 PO = 2115.1 RUN NO = 50.000

SECTION (1)MAIN LND GR DR-0 DEPENDENT VARIABLE CP

Y/BML	.0380	.3100	.5820	.8530
X/CML				
.050	-.6402	-.5057	-.5603	-.1672
.230	-.0156	-.0206	.0157	-.0772
.410	-.0348	-.0145	-.0105	-.0378
.590	-.0428	-.0317	-.0267	-.0156
.770	-.0580	-.0550	-.0590	-.0873
.950	-.0813	-.0873	-.0681	-.0641

ALPHA (1) = 4.170 BETA (2) = -4.020 Q(PSF) = 42.851 PO = 2115.1 RUN NO = 50.000

SECTION (1)MAIN LND GR DR-0 DEPENDENT VARIABLE CP

Y/BML	.0380	.3100	.5820	.8530
X/CML				
.050	-.6455	-.5187	-.5532	-.3037
.230	-.0176	-.0359	-.0065	-.0815
.410	-.0298	-.0105	-.0075	-.0369
.590	-.0410	-.0318	-.0268	-.0166
.770	-.0521	-.0552	-.0572	-.0826
.950	-.0785	-.0866	-.0673	-.0613

ALPHA (1) = 4.180 BETA (3) = -2.970 Q(PSF) = 42.851 PO = 2115.1 RUN NO = 50.000

SECTION (1)MAIN LND GR DR-0 DEPENDENT VARIABLE CP

Y/BML	.0380	.3100	.5820	.8530
X/CML				
.050	-.6324	-.5205	-.5427	-.4238
.230	-.0216	-.0488	-.0387	-.0861
.410	-.0236	-.0054	-.0064	-.0397
.590	-.0337	-.0266	-.0256	-.0165
.770	-.0478	-.0498	-.0528	-.0740
.950	-.0720	-.0841	-.0619	-.0548

OA163B MAIN GEAR DOOR OUTER SURFACE (RFPM12)

ALPHA (1) = 4.170 BETA (4) = -2.040 Q(PSF) = 42.851 PO = 2115.1 RUN NO = 50.000

SECTION (1)MAIN LND GR DR-O DEPENDENT VARIABLE CP

Y/BML	.0380	.3100	.5820	.8530
X/CML				
.050	-.6281	-.5350	-.5451	-.4914
.230	-.0237	-.0601	-.0692	-.0915
.410	-.0227	-.0024	-.0065	-.0419
.590	-.0308	-.0267	-.0237	-.0176
.770	-.0460	-.0500	-.0510	-.0682
.950	-.0692	-.0814	-.0591	-.0530

ALPHA (1) = 4.180 BETA (5) = -1.040 Q(PSF) = 42.851 PO = 2115.1 RUN NO = 50.000

SECTION (1)MAIN LND GR DR-O DEPENDENT VARIABLE CP

Y/BML	.0380	.3100	.5820	.8530
X/CML				
.050	-.6161	-.5463	-.5362	-.5402
.230	-.0348	-.0641	-.1005	-.0944
.410	-.0287	.0025	-.0075	-.0439
.590	-.0348	-.0237	-.0237	-.0196
.770	-.0469	-.0499	-.0489	-.0611
.950	-.0732	-.0833	-.0580	-.0469

ALPHA (1) = 4.170 BETA (6) = -.020 Q(PSF) = 42.851 PO = 2115.1 RUN NO = 50.000

SECTION (1)MAIN LND GR DR-O DEPENDENT VARIABLE CP

Y/BML	.0380	.3100	.5820	.8530
X/CML				
.050	-.6076	-.5590	-.5368	-.5853
.230	-.0459	-.0733	-.1239	-.0945
.410	-.0500	-.0014	-.0085	-.0470
.590	-.0510	-.0267	-.0247	-.0227
.770	-.0642	-.0500	-.0439	-.0500
.950	-.0864	-.0834	-.0571	-.0439

OA163B MAIN GEAR DOOR OUTER SURFACE (RFPM12)

ALPHA (1) = 4.170 BETA (7) = .970 Q(PSF) = 42.851 PO = 2115.1 RUN NO = 50.000

SECTION (1)MAIN LND GR DR-O DEPENDENT VARIABLE CP

Y/BML	.0380	.3100	.5820	.8530
X/CML				
.050	-.6057	-.5703	-.5409	-.6148
.230	-.0621	-.0763	-.1482	-.1016
.410	-.0955	-.0034	-.0065	-.0530
.590	-.0814	-.0298	-.0237	-.0247
.770	-.0844	-.0510	-.0449	-.0419
.950	-.1057	-.0854	-.0581	-.0470

ALPHA (1) = 4.170 BETA (8) = 1.970 Q(PSF) = 42.851 PO = 2115.1 RUN NO = 50.000

SECTION (1)MAIN LND GR DR-O DEPENDENT VARIABLE CP

Y/BML	.0380	.3100	.5820	.8530
X/CML				
.050	-.6047	-.5784	-.5400	-.6188
.230	-.0883	-.0913	-.1651	-.1075
.410	-.1398	-.0075	-.0065	-.0590
.590	-.1105	-.0327	-.0236	-.0257
.770	-.1055	-.0550	-.0449	-.0277
.950	-.1227	-.0893	-.0560	-.0519

ALPHA (1) = 4.170 BETA (9) = 2.990 Q(PSF) = 42.851 PO = 2115.1 RUN NO = 50.000

SECTION (1)MAIN LND GR DR-O DEPENDENT VARIABLE CP

Y/BML	.0380	.3100	.5820	.8530
X/CML				
.050	-.6077	-.5886	-.5483	-.6410
.230	-.1344	-.0991	-.1767	-.1112
.410	-.1615	-.0135	-.0105	-.0628
.590	-.1354	-.0377	-.0236	-.0266
.770	-.1243	-.0598	-.0467	-.0215
.950	-.1424	-.0910	-.0588	-.0608

OA163B MAIN GEAR DOOR OUTER SURFACE (RFPM12)

ALPHA (1) = 4.170 BETA (10) = 4.050 Q(PSF) = 42.851 PO = 2115.1 RUN NO = 50.000

SECTION (1)MAIN LND GR DR-O DEPENDENT VARIABLE CP

Y/BML	.0380	.3100	.5820	.8530
X/CML				
.050	-.6245	-.5931	-.5485	-.6762
.230	-.2051	-.1200	-.1970	-.1220
.410	-.1990	-.0197	-.0136	-.0622
.590	-.1666	-.0399	-.0197	-.0207
.770	-.1493	-.0612	-.0440	-.0115
.950	-.1645	-.0946	-.0612	-.0652

ALPHA (1) = 4.170 BETA (11) = 5.000 Q(PSF) = 42.851 PO = 2115.1 RUN NO = 50.000

SECTION (1)MAIN LND GR DR-O DEPENDENT VARIABLE CP

Y/BML	.0380	.3100	.5920	.8530
X/CML				
.050	-.6553	-.5985	-.5296	-.6969
.230	-.3045	-.1545	-.2346	-.1494
.410	-.2538	-.0288	-.0146	-.0663
.590	-.2042	-.0450	-.0176	-.0166
.770	-.1748	-.0622	-.0460	-.0085
.950	-.1900	-.0977	-.0592	-.0704

OA163B MAIN GEAR DOOR OUTER SURFACE (RFPM13) (27 APR 77)

REFERENCE DATA

SREF =	2690.0000 SQ.FT.	XMRP =	1076.7000 IN. XO		
LREF =	474.8100 INCHES	YMRP =	.0000 IN. YO		
BREF =	936.6800 INCHES	ZMRP =	375.0000 IN. ZO		
SCALE =	.0405				

PARAMETRIC DATA

SRDBRK =	25.000	BDFLAP =	.000
ELV-L =	.000	ELV-R =	.000
PHI-N =	66.000	THETAN =	108.000
PHI-ML =	32.200	THETML =	5.000
PHI-MR =	36.000	THETMR =	5.600

ALPHA (1) = 4.120 BETA (1) = -5.030 Q(PSF) = 42.904 PO = 2112.9 RUN NO = 82.000

SECTION (1)MAIN LND GR DR-O DEPENDENT VARIABLE CP

Y/BML	.0380	.3100	.5820	.8530
X/CML				
.050	-.6677	-.5292	-.5848	-.1703
.230	-.0317	-.0348	.0025	-.0914
.410	-.0439	-.0297	-.0267	-.0570
.590	-.0601	-.0499	-.0449	-.0338
.770	-.0782	-.0752	-.0793	-.1035
.950	-.1025	-.1106	-.0924	-.0873

ALPHA (1) = 4.120 BETA (2) = -4.040 Q(PSF) = 42.904 PO = 2112.9 RUN NO = 82.000

SECTION (1)MAIN LND GR DR-O DEPENDENT VARIABLE CP

Y/BML	.0380	.3100	.5820	.8530
X/CML				
.050	-.6647	-.5304	-.5748	-.2962
.230	-.0317	-.0489	-.0125	-.0993
.410	-.0378	-.0256	-.0246	-.0620
.590	-.0549	-.0489	-.0448	-.0378
.770	-.0721	-.0721	-.0761	-.0983
.950	-.0993	-.1084	-.0892	-.0842

ALPHA (1) = 4.120 BETA (3) = -2.950 Q(PSF) = 42.904 PO = 2112.9 RUN NO = 82.000

SECTION (1)MAIN LND GR DR-O DEPENDENT VARIABLE CP

Y/BML	.0380	.3100	.5820	.8530
X/CML				
.050	-.6590	-.5459	-.5762	-.4085
.230	-.0368	-.0600	-.0438	-.1055
.410	-.0337	-.0246	-.0236	-.0630
.590	-.0519	-.0479	-.0459	-.0388
.770	-.0691	-.0721	-.0762	-.0933
.950	-.0943	-.1085	-.0863	-.0822

DATE 27 APR 77 OA163B PRESSURE DATA LISTING

OA163B MAIN GEAR DOOR OUTER SURFACE (RFPMI3)

ALPHA (1) = 4.120 BETA (4) = -2.010 Q(PSF) = 42.904 PO = 2112.9 RUN NO = 82.000

SECTION (1)MAIN LND GR DR-O DEPENDENT VARIABLE CP

Y/BML	.0380	.3100	.5820	.8530
X/CML				
.050	-.6453	-.5545	-.5706	-.4828
.230	-.0408	-.0801	-.0811	-.1104
.410	-.0327	-.0206	-.0236	-.0650
.590	-.0488	-.0458	-.0468	-.0388
.770	-.0630	-.0710	-.0741	-.0872
.950	-.0933	-.1064	-.0832	-.0771

ALPHA (1) = 4.120 BETA (5) = -1.020 Q(PSF) = 42.904 PO = 2112.9 RUN NO = 82.000

SECTION (1)MAIN LND GR DR-O DEPENDENT VARIABLE CP

Y/BML	.0380	.3100	.5820	.8530
X/CML				
.050	-.6218	-.5702	-.5631	-.5337
.230	-.0480	-.0763	-.1127	-.1127
.410	-.0378	-.0156	-.0237	-.0672
.590	-.0510	-.0449	-.0439	-.0399
.770	-.0631	-.0692	-.0692	-.0783
.950	-.0935	-.1046	-.0814	-.0682

ALPHA (1) = 4.120 BETA (6) = .000 Q(PSF) = 42.904 PO = 2112.9 RUN NO = 82.000

SECTION (1)MAIN LND GR DR-O DEPENDENT VARIABLE CP

Y/BML	.0380	.3100	.5820	.8530
X/CML				
.050	-.5939	-.5748	-.5807	-.5758
.230	-.0587	-.0809	-.1332	-.1191
.410	-.0507	-.0175	-.0245	-.0678
.590	-.0628	-.0447	-.0406	-.0426
.770	-.0789	-.0698	-.0668	-.0708
.950	-.1070	-.1070	-.0789	-.0658

OA163B MAIN GEAR DOOR OUTER SURFACE (RFPM13)

ALPHA (1) = 4.120 BETA (7) = 1.020 Q(PSF) = 42.904 PO = 2112.9 RUN NO = 82.000

SECTION (1)MAIN LND GR DR-O DEPENDENT VARIABLE CP

Y/BML	.0380	.3100	.5820	.8530
X/CML				
.050	-.5996	-.5875	-.5662	-.6037
.230	-.0713	-.0824	-.1563	-.1206
.410	.0874	-.0166	-.0247	-.0717
.590	.0895	-.0459	-.0399	-.0439
.770	-.1006	-.0723	-.0642	-.0611
.950	-.1219	-.1067	-.0783	-.0682

ALPHA (1) = 4.120 BETA (8) = 2.000 Q(PSF) = 42.904 PO = 2112.9 RUN NO = 82.000

SECTION (1)MAIN LND GR DR-O DEPENDENT VARIABLE CP

Y/BML	.0380	.3100	.5820	.8530
X/CML				
.050	-.5907	-.5978	-.5684	-.6089
.230	-.0865	-.0895	-.1665	-.1260
.410	-.1300	-.0217	-.0227	-.0743
.590	-.1168	-.0480	-.0389	-.0429
.770	-.1158	-.0723	-.0642	-.0510
.950	-.1381	-.1087	-.0794	-.0693

ALPHA (1) = 4.120 BETA (9) = 2.990 Q(PSF) = 42.904 PO = 2112.9 RUN NO = 82.000

SECTION (1)MAIN LND GR DR-O DEPENDENT VARIABLE CP

Y/BML	.0380	.3100	.5820	.8530
X/CML				
.050	-.4968	-.6179	-.5644	-.6612
.230	-.1114	-.0892	-.1780	-.1306
.410	-.1497	-.0276	-.0256	-.0761
.590	-.1306	-.0508	-.0408	-.0397
.770	-.1275	-.0751	-.0640	-.0418
.950	-.1477	-.1104	-.0781	-.0771

OA163B MAIN GEAR DOOR OUTER SURFACE (RFPM13)

ALPHA (1) = 4.120 BETA (10) = 4.070 Q(PSF) = 42.904 PO = 2112.9 RUN NO = 82.000

SECTION (1)MAIN LND GR DR-O DEPENDENT VARIABLE CP

Y/BML	.0380	.3100	.5820	.8530
X/CML				
.050	-.2116	-.6866	-.5684	-.7028
.230	-.1560	-.0610	-.1490	-.1308
.410	-.1611	-.0459	-.0358	-.0701
.590	-.1399	-.0600	-.0449	-.0358
.770	-.1378	-.0762	-.0681	-.0398
.950	-.1560	-.1126	-.0802	-.0802

ALPHA (1) = 4.120 BETA (11) = 5.030 Q(PSF) = 42.904 PO = 2112.9 RUN NO = 82.000

SECTION (1)MAIN LND GR DR-O DEPENDENT VARIABLE CP

Y/BML	.0380	.3100	.5820	.8530
X/CML				
.050	-.1921	-.7028	-.6008	-.6705
.230	-.1820	-.0559	-.1104	-.1195
.410	-.1730	-.0529	-.0486	-.0690
.590	-.1498	-.0630	-.0529	-.0428
.770	-.1477	-.0811	-.0700	-.0438
.950	-.1679	-.1114	-.0842	-.0831

OA163B MAIN GEAR DOOR INNER SURFACE (RFPF01) (27 APR 77)

REFERENCE DATA

SREF =	2690.0000 SQ.FT.	XMRP =	1076.7000 IN.	XO	
LREF =	474.8100 INCHES	YMRP =	.0000 IN.	YO	
BREF =	936.6800 INCHES	ZMRP =	375.0000 IN.	ZO	
SCALE =	.0405				

PARAMETRIC DATA

SPDBRK =	25.000	BDFLAP =	.000
ELV-L =	.000	ELV-R =	.000
PHI-N =	30.800	THETAN =	5.000
PHI-ML =	32.200	THETML =	5.000
PHI-MR =	32.200	THETMR =	5.000

BETA (1) = -5.040 ALPHA (1) = -2.060 Q(PSF) = 42.911 PO = 2119.2 RUN NO = 1.0000

SECTION (1)MAIN LND GR DR-I DEPENDENT VARIABLE CP

Y/BML	.0760	.3100	.5820	.8530
X/CML				
.050	-.7205	-.7184	-1.0115	-.3245
.230	-.4678	-.4917	-.2684	-.3245
.410	-.1692	-.1932	-.3185	-.2789
.590	-.2237	-.2989	-.3163	-.3002
.770	-.2640	-.3032	-.3043	-.3272
.950	-.2793	-.3087	-.3163	-.3294

BETA (1) = -4.040 ALPHA (2) = .010 Q(PSF) = 42.911 PO = 2119.2 RUN NO = 1.0000

SECTION (1)MAIN LND GR DR-I DEPENDENT VARIABLE CP

Y/BML	.0760	.3100	.5820	.8530
X/CML				
.050	-.7139	-.6386	-.8906	-.3482
.230	-.4324	-.4226	-.1869	-.2813
.410	-.1542	-.1280	-.2567	-.2164
.590	-.1738	-.2327	-.2447	-.2357
.770	-.2000	-.2447	-.2513	-.2731
.950	-.2185	-.2447	-.2524	-.2742

BETA (1) = -5.050 ALPHA (3) = 2.070 Q(PSF) = 42.911 PO = 2119.2 RUN NO = 1.0000

SECTION (1)MAIN LND GR DR-I DEPENDENT VARIABLE CP

Y/BML	.0760	.3100	.5820	.8530
X/CML				
.050	-.6583	-.5736	-.8168	-.3707
.230	-.3879	-.3727	-.1393	-.2345
.410	-.1208	-.0904	-.2099	-.1750
.590	-.1360	-.1849	-.2044	-.1972
.770	-.1610	-.2001	-.2077	-.2186
.950	-.1806	-.1968	-.2088	-.2218

OA1638 MAIN GEAR DOOR INNER SURFACE (RFPF01)

BETA (1) = -5.060 ALPHA (4) = 6.210 Q(PSF) = 42.911 PO = 2119.2 RUN NO = 1.0000

SECTION (1)MAIN LND GR DR-I DEPENDENT VARIABLE CP

Y/BML	.0760	.3100	.5820	.8530
X/CML				
.050	-.5531	-.4321	-.6338	-.3075
.230	-.2238	-.2097	-.0069	-.1230
.410	-.0428	-.0014	-.0745	-.0835
.590	-.0494	-.0636	-.1039	-.0987
.770	-.0625	-.0788	-.0963	-.0690
.950	-.0777	-.0821	-.0723	-.0810

BETA (1) = -5.060 ALPHA (5) = 8.280 Q(PSF) = 42.911 PO = 2119.2 RUN NO = 1.0000

SECTION (1)MAIN LND GR DR-I DEPENDENT VARIABLE CP

Y/BML	.0760	.3100	.5820	.8530
X/CML				
.050	-.4919	-.3614	-.5278	-.4148
.230	-.1308	-.1319	.0572	-.0782
.410	.0039	.0322	-.0134	-.0338
.590	-.0079	-.0145	-.0319	-.0408
.770	-.0177	-.0232	-.0340	-.0025
.950	-.0351	-.0242	-.0123	-.0232

BETA (1) = -5.050 ALPHA (6) = 10.330 Q(PSF) = 42.911 PO = 2119.2 RUN NO = 1.0000

SECTION (1)MAIN LND GR DR-I DEPENDENT VARIABLE CP

Y/BML	.0760	.3100	.5820	.8530
X/CML				
.050	-.4216	-.2855	-.4270	-.5376
.230	-.0392	-.0533	.1130	-.0205
.410	.0579	.0752	.0471	.0256
.590	.0417	.0417	.0223	.0256
.770	.0309	.0331	.0266	.0601
.950	.0115	.0277	.0471	.0341

OA163B MAIN GEAR DOOR INNER SURFACE (RFPF01)

BETA (2) = -4.040 ALPHA (1) = -2.050 Q(PSF) = 42.777 PO = 2119.2 RUN NO = 2.0000

SECTION (1)MAIN LND GR DR-I DEPENDENT VARIABLE CP

Y/BML	.0760	.3100	.5820	.8530
X/CML				
.050	-.7282	-.7011	-.9885	-.3260
.230	-.4689	-.4711	-.2487	-.3260
.410	-.1728	-.1728	-.3073	-.2645
.590	-.2086	-.2856	-.2986	-.2847
.770	-.2433	-.2943	-.2932	-.3160
.950	-.2639	-.2954	-.3019	-.3236

BETA (2) = -4.040 ALPHA (2) = .010 Q(PSF) = 42.777 PO = 2119.2 RUN NO = 2.0000

SECTION (1)MAIN LND GR DR-I DEPENDENT VARIABLE CP

Y/BML	.0760	.3100	.5820	.8530
X/CML				
.050	-.6979	-.6314	-.8919	-.3458
.230	-.4297	-.4101	-.1845	-.2759
.410	-.1529	-.1224	-.2532	-.2141
.590	-.1703	-.2259	-.2401	-.2324
.770	-.1965	-.2401	-.2488	-.2728
.950	-.2161	-.2412	-.2521	-.2717

BETA (2) = -4.040 ALPHA (3) = 2.070 Q(PSF) = 42.777 PO = 2119.2 RUN NO = 2.0000

SECTION (1)MAIN LND GR DR-I DEPENDENT VARIABLE CP

Y/BML	.0760	.3100	.5820	.8530
X/CML				
.050	-.6644	-.5585	-.7933	-.3293
.230	-.3783	-.3531	-.1205	-.1699
.410	-.1227	-.0801	-.1915	-.1679
.590	-.1314	-.1707	-.1904	-.1852
.770	-.1500	-.1838	-.2002	-.2188
.950	-.1685	-.1838	-.1991	-.2155

OA163B MAIN GEAR DOOR INNER SURFACE (RFPF01)

BETA (2) = -4.040 ALPHA (4) = 4.130 Q(PSF) = 42.777 PO = 2119.2 RUN NO = 2.0000

SECTION (1)MAIN LND GR DR-I DEPENDENT VARIABLE CP

Y/BML	.0760	.3100	.5820	.8530
X/CML				
.050	-.6159	-.4948	-.7065	-.3169
.230	-.2808	-.2743	-.0549	-.1424
.410	-.0833	-.0353	-.1302	-.1171
.590	-.0887	-.1106	-.1422	-.1333
.770	-.1029	-.1258	-.1411	-.1368
.950	-.1182	-.1269	-.1302	-.1346

BETA (2) = -4.040 ALPHA (5) = 6.180 Q(PSF) = 42.777 PO = 2119.2 RUN NO = 2.0000

SECTION (1)MAIN LND GR DR-I DEPENDENT VARIABLE CP

Y/BML	.0760	.3100	.5820	.8530
X/CML				
.050	-.5541	-.4233	-.6075	-.3803
.230	-.1813	-.1900	.0050	-.1281
.410	-.0385	-.0058	-.0625	-.0804
.590	-.0472	-.0548	-.0810	-.0875
.770	-.0548	-.0690	-.0843	-.0516
.950	-.0734	-.0690	-.0592	-.0690

BETA (2) = -4.040 ALPHA (6) = 8.270 Q(PSF) = 42.777 PO = 2119.2 RUN NO = 2.0000

SECTION (1)MAIN LND GR DR-I DEPENDENT VARIABLE CP

Y/BML	.0760	.3100	.5820	.8530
X/CML				
.050	-.4839	-.3464	-.5014	-.4854
.230	-.0931	-.1062	.0705	-.0664
.410	.0160	.0312	-.0014	-.0217
.590	.0018	-.0035	-.0211	-.0268
.770	-.0091	-.0091	-.0211	.0127
.950	-.0287	-.0156	.0029	-.0047

OA163B MAIN GEAR DOOR INNER SURFACE (RFPF01)

BETA (3) = -2.960 ALPHA (1) = -2.070 Q(PSF) = 42.885 PO = 2119.2 RUN NO = 3.0000

SECTION (1)MAIN LND GR DR-I DEPENDENT VARIABLE CP

Y/BML	.0760	.3100	.5820	.8530
X/CML				
.050	-.7413	-.6830	-.9682	-.3176
.230	-.4562	-.4562	-.2336	-.3206
.410	-.1764	-.1580	-.2952	-.2524
.590	-.2002	-.2671	-.2995	-.2684
.770	-.2336	-.2758	-.2887	-.3038
.950	-.2488	-.2779	-.2930	-.3190

BETA (3) = -2.960 ALPHA (2) = .000 Q(PSF) = 42.885 PO = 2119.2 RUN NO = 3.0000

SECTION (1)MAIN LND GR DR-I DEPENDENT VARIABLE CP

Y/BML	.0760	.3100	.5820	.8530
X/CML				
.050	-.7160	-.6170	-.8693	-.3582
.230	-.4093	-.4017	-.1700	-.2016
.410	-.1537	-.1124	-.2298	-.2016
.590	-.1646	-.2124	-.2331	-.2198
.770	-.1885	-.2244	-.2385	-.2592
.950	-.2037	-.2298	-.2440	-.2679

BETA (3) = -2.960 ALPHA (3) = 2.050 Q(PSF) = 42.885 PO = 2119.2 RUN NO = 3.0000

SECTION (1)MAIN LND GR DR-I DEPENDENT VARIABLE CP

Y/BML	.0760	.3100	.5820	.8530
X/CML				
.050	-.6730	-.5507	-.7833	-.3292
.230	-.3377	-.3356	-.1030	-.1638
.410	-.1204	-.0735	-.1783	-.1567
.590	-.1259	-.1565	-.1794	-.1740
.770	-.1423	-.1740	-.1914	-.2045
.950	-.1587	-.1718	-.1903	-.1980

OA163B MAIN GEAR DOOR INNER SURFACE (RFPF01)

BETA (3) = -2.960 ALPHA (4) = 4.130 Q(PSF) = 42.885 PO = 2119.2 RUN NO = 3.0000

SECTION (1)MAIN LND GR DR-I DEPENDENT VARIABLE CP

Y/BML	.0760	.3100	.5820	.8530
X/CML				
.050	-.6029	-.4819	-.6781	-.3397
.230	-.2324	-.2444	-.0352	-.1543
.410	-.0712	-.0330	-.1049	-.1128
.590	-.0810	-.0962	-.1311	-.1321
.770	-.0875	-.1093	-.1269	-.1071
.950	-.1071	-.1115	-.1038	-.1115

BETA (3) = -2.960 ALPHA (5) = 6.190 Q(PSF) = 42.885 PO = 2119.2 RUN NO = 3.0000

SECTION (1)MAIN LND GR DR-I DEPENDENT VARIABLE CP

Y/BML	.0760	.3100	.5820	.8530
X/CML				
.050	-.5446	-.4148	-.5784	-.4657
.230	-.1388	-.1650	.0268	-.1149
.410	-.0265	-.0047	-.0472	-.0714
.590	-.0418	-.0472	-.0712	-.0764
.770	-.0516	-.0549	-.0712	-.0352
.950	-.0679	-.0570	-.0461	-.0527

BETA (3) = -2.960 ALPHA (6) = 8.270 Q(PSF) = 42.885 PO = 2119.2 RUN NO = 3.0000

SECTION (1)MAIN LND GR DR-I DEPENDENT VARIABLE CP

Y/BML	.0760	.3100	.5820	.8530
X/CML				
.050	-.4728	-.3362	-.4814	-.5432
.230	-.0502	-.0870	.0797	-.0548
.410	.0256	.0397	.0147	-.0115
.590	.0082	.0028	-.0068	-.0105
.770	-.0014	-.0014	-.0079	.0256
.950	-.0220	-.0057	.0158	.0033

OA163B MAIN GEAR DOOR INNER SURFACE (RFPF01)

BETA (4) = -2.010 ALPHA (1) = -2.080 Q(PSF) = 42.825 PO = 2114.9 RUN NO = 4.0000

SECTION (1)MAIN LND GR DR-I DEPENDENT VARIABLE CP

Y/BML	.0760	.3100	.5820	.8530
X/CML				
.050	-.7566	-.6686	-.9348	-.3195
.230	-.4426	-.4480	-.2122	-.2377
.410	-.1785	-.1448	-.2665	-.2347
.590	-.1926	-.2470	-.2633	-.2538
.770	-.2089	-.2600	-.2807	-.2883
.950	-.2220	-.2665	-.2796	-.3111

BETA (4) = -2.010 ALPHA (2) = -.010 Q(PSF) = 42.825 PO = 2114.9 RUN NO = 4.0000

SECTION (1)MAIN LND GR DR-I DEPENDENT VARIABLE CP

Y/BML	.0760	.3100	.5820	.8530
X/CML				
.050	-.7069	-.6003	-.8384	-.3338
.230	-.3797	-.3840	-.1460	-.2035
.410	-.1536	-.1036	-.2177	-.1903
.590	-.1579	-.1927	-.2112	-.2075
.770	-.1753	-.2025	-.2308	-.2460
.950	-.1916	-.2101	-.2286	-.2547

BETA (4) = -2.010 ALPHA (3) = 2.050 Q(PSF) = 42.825 PO = 2114.9 RUN NO = 4.0000

SECTION (1)MAIN LND GR DR-I DEPENDENT VARIABLE CP

Y/BML	.0760	.3100	.5820	.8530
X/CML				
.050	-.6591	-.5349	-.7484	-.3171
.230	-.2889	-.3019	-.0809	-.1694
.410	-.1081	-.0646	-.1604	-.1451
.590	-.1147	-.1386	-.1724	-.1633
.770	-.1277	-.1549	-.1745	-.1832
.950	-.1451	-.1549	-.1647	-.1724

DATE 27 APR 77 OA163B PRESSURE DATA LISTING

OA163B MAIN GEAR DOOR INNER SURFACE (RFPF01)

BETA (4) = -2.020 ALPHA (4) = 4.140 Q(PSF) = 42.825 PO = 2114.9 RUN NO = 4.0000

SECTION (1)MAIN LND GR DR-I DEPENDENT VARIABLE CP

Y/BML	.0760	.3100	.5820	.8530
X/CML				
.050	-.5972	-.4673	-.6539	-.3584
.230	-.1847	-.2120	-.0211	-.1383
.410	-.0636	-.0363	-.0963	-.1069
.590	-.0789	-.0876	-.1193	-.1221
.770	-.0876	-.0996	-.1160	-.0974
.950	-.1018	-.1007	-.0887	-.0963

BETA (4) = -2.020 ALPHA (5) = 6.220 Q(PSF) = 42.825 PO = 2114.9 RUN NO = 4.0000

SECTION (1)MAIN LND GR DR-I DEPENDENT VARIABLE CP

Y/BML	.0760	.3100	.5820	.8530
X/CML				
.050	-.5397	-.3978	-.5539	-.5098
.230	-.1008	-.1401	.0400	-.0917
.410	-.0178	-.0036	-.0374	-.0572
.590	-.0353	-.0429	-.0571	-.0603
.770	-.0429	-.0462	-.0538	-.0265
.950	-.0637	-.0473	-.0298	-.0396

BETA (4) = -2.020 ALPHA (6) = 8.280 Q(PSF) = 42.825 PO = 2114.9 RUN NO = 4.0000

SECTION (1)MAIN LND GR DR-I DEPENDENT VARIABLE CP

Y/BML	.0760	.3100	.5820	.8530
X/CML				
.050	-.4670	-.3234	-.4475	-.5788
.230	-.0112	-.0634	.0877	-.0378
.410	.0311	.0420	.0268	-.0044
.590	.0137	.0094	-.0014	.0015
.770	-.0003	.0050	.0090	.0366
.950	-.0210	-.0003	.0290	.0181

OA163B MAIN GEAR DOOR INNER SURFACE (RFPF01)

BETA (5) = -1.020 ALPHA (1) = -2.080 Q(PSF) = 42.920 PO = 2115.0 RUN NO = 5.0000

SECTION (1)MAIN LND GR DR-I DEPENDENT VARIABLE CP

Y/BML	.0760	.3100	.5820	.8530
X/CML				
.050	-.7614	-.6553	-.9130	-.3365
.230	-.4128	-.4258	-.1919	-.2409
.410	-.1811	-.1367	-.2601	-.2288
.590	-.1887	-.2352	-.2504	-.2429
.770	-.2071	-.2482	-.2742	-.2725
.950	-.2255	-.2537	-.2688	-.3056

BETA (5) = -1.020 ALPHA (2) = .010 Q(PSF) = 42.920 PO = 2115.0 RUN NO = 5.0000

SECTION (1)MAIN LND GR DR-I DEPENDENT VARIABLE CP

Y/BML	.0760	.3100	.5820	.8530
X/CML				
.050	-.7060	-.5807	-.8181	-.3263
.230	-.3346	-.3531	-.1245	-.2048
.410	-.1397	-.0951	-.1986	-.1775
.590	-.1517	-.1800	-.1974	-.1937
.770	-.1637	-.1942	-.2181	-.2290
.950	-.1833	-.1952	-.2105	-.2323

BETA (5) = -1.020 ALPHA (3) = 2.070 Q(PSF) = 42.920 PO = 2115.0 RUN NO = 5.0000

SECTION (1)MAIN LND GR DR-I DEPENDENT VARIABLE CP

Y/BML	.0760	.3100	.5820	.8530
X/CML				
.050	-.6561	-.5221	-.7226	-.2779
.230	-.2367	-.2748	-.0646	-.1715
.410	-.0962	-.0846	-.1376	-.1361
.590	-.1136	-.1278	-.1605	-.1594
.770	-.1202	-.1387	-.1615	-.1583
.950	-.1365	-.1409	-.1343	-.1452

DATE 27 APR 77 OA163B PRESSURE DATA LISTING (RFPF01)

OA163B MAIN GEAR DOOR INNER SURFACE

BETA (5) = -1.020 ALPHA (4) = 4.130 Q(PSF) = 42.920 PO = 2115.0 RUN NO = 5.0000

SECTION (1)MAIN LND GR DR-I DEPENDENT VARIABLE CP

Y/BML	.0760	.3100	.5820	.8530
X/CML				
.050	-.5917	-.4572	-.6264	-.4502
.230	-.1479	-.1891	-.0047	-.1315
.410	-.0567	-.0372	-.0839	-.0972
.590	-.0730	-.0828	-.1045	-.1148
.770	-.0817	-.0860	-.1045	-.0850
.950	-.0980	-.0871	-.0730	-.0806

BETA (5) = -1.030 ALPHA (5) = 6.180 Q(PSF) = 42.920 PO = 2115.0 RUN NO = 5.0000

SECTION (1)MAIN LND GR DR-I DEPENDENT VARIABLE CP

Y/BML	.0760	.3100	.5820	.8530
X/CML				
.050	-.5337	-.3824	-.5207	-.5356
.230	-.0613	-.1168	.0475	-.0844
.410	-.0112	.0028	-.0232	-.0500
.590	-.0297	-.0330	-.0460	-.0490
.770	-.0373	-.0373	-.0395	-.0177
.950	-.0613	-.0395	-.0112	-.0243

BETA (5) = -1.030 ALPHA (6) = 8.260 Q(PSF) = 42.920 PO = 2115.0 RUN NO = 5.0000

SECTION (1)MAIN LND GR DR-I DEPENDENT VARIABLE CP

Y/BML	.0760	.3100	.5820	.8530
X/CML				
.050	-.4630	-.3167	-.4262	-.5795
.230	.0169	-.0415	.0895	-.0286
.410	.0375	.0505	.0353	.0045
.590	.0202	.0169	.0093	.0126
.770	.0050	.0104	.0159	.0483
.950	-.0198	.0072	.0418	.0332

OA163B MAIN GEAR DOOR INNER SURFACE (RFPF01)

BETA (6) = .000 ALPHA (1) = -2.050 Q(PSF) = 43.418 PO = 2113.6 RUN NO = 6.0000

SECTION (1)MAIN LND GR DR-I DEPENDENT VARIABLE CP

Y/BML	.0760	.3100	.5920	.8530
X/CML				
.050	-.7459	-.6294	-.8797	-.2952
.230	-.3715	-.3974	-.1633	-.2421
.410	-.1697	-.1266	-.2388	-.2110
.590	-.1827	-.2150	-.2269	-.2250
.770	-.1956	-.2312	-.2604	-.2561
.950	-.2107	-.2312	-.2496	-.2830

BETA (6) = .000 ALPHA (2) = .000 Q(PSF) = 43.418 PO = 2113.6 RUN NO = 6.0000

SECTION (1)MAIN LND GR DR-I DEPENDENT VARIABLE CP

Y/BML	.0760	.3100	.5820	.8530
X/CML				
.050	-.7006	-.5724	-.7890	-.2577
.230	-.2869	-.3225	-.1070	-.2197
.410	-.1307	-.0930	-.1835	-.1666
.590	-.1458	-.1662	-.2061	-.1856
.770	-.1555	-.1824	-.2061	-.2083
.950	-.1749	-.1824	-.1878	-.1975

BETA (6) = .000 ALPHA (3) = 2.060 Q(PSF) = 43.418 PO = 2113.6 RUN NO = 6.0000

SECTION (1)MAIN LND GR DR-I DEPENDENT VARIABLE CP

Y/BML	.0760	.3100	.5820	.8530
X/CML				
.050	-.6392	-.5026	-.6930	-.2873
.230	-.1886	-.2391	-.0476	-.1663
.410	-.0885	-.0616	-.1251	-.1274
.590	-.1047	-.1154	-.1574	-.1543
.770	-.1133	-.1262	-.1445	-.1445
.950	-.1294	-.1240	-.1133	-.1208

DATE 27 APR 77 OA163B PRESSURE DATA LISTING

OA163B MAIN GEAR DOOR INNER SURFACE (RFPF01)

BETA (6) = .000 ALPHA (4) = 4.110 Q(PSF) = 43.418 PO = 2113.6 RUN NO = 6.0000

SECTION (1)MAIN LND GR DR-I DEPENDENT VARIABLE CP

Y/BML	.0760	.3100	.5820	.8530
X/CML				
.050	-.5751	-.4336	-.5869	-.4509
.230	-.1065	-.1601	.0071	-.1170
.410	-.0496	-.0336	-.0690	-.0801
.590	-.0647	-.0743	-.0904	-.0861
.770	-.0711	-.0754	-.0829	-.0679
.950	-.0893	-.0754	-.0550	-.0636

BETA (6) = .000 ALPHA (5) = 6.200 Q(PSF) = 43.418 PO = 2113.6 RUN NO = 6.0000

SECTION (1)MAIN LND GR DR-I DEPENDENT VARIABLE CP

Y/BML	.0760	.3100	.5820	.8530
X/CML				
.050	-.5087	-.3610	-.4862	-.5733
.230	-.0260	-.0924	.0584	-.0729
.410	-.0035	.0081	-.0078	-.0372
.590	-.0207	-.0239	-.0335	-.0362
.770	-.0314	-.0292	-.0260	-.0046
.950	-.0538	-.0281	.0007	-.0110

BETA (6) = .000 ALPHA (6) = 8.280 Q(PSF) = 43.418 PO = 2113.6 RUN NO = 6.0000

SECTION (1)MAIN LND GR DR-I DEPENDENT VARIABLE CP

Y/BML	.0760	.3100	.5820	.8530
X/CML				
.050	-.4482	-.2986	-.3862	-.5717
.230	.0434	-.0174	.0904	-.0213
.410	.0445	.0616	.0498	.0114
.590	.0274	.0263	.0220	.0253
.770	.0124	.0210	.0317	.0584
.950	-.0142	.0103	.0573	.0541

OA163B MA.N GEAR DOOR INNER SURFACE (RFPF01)

BETA (7) = 1.000 ALPHA (1) = -2.060 Q(PSF) = 43.823 PO = 2113.6 RUN NO = 7.0000

SECTION (1)MAIN LND GR DR-I DEPENDENT VARIABLE CP

Y/BML	.0760	.3100	.5820	.8530
X/CML				
.050	-.7323	-.6128	-.8358	-.2344
.230	-.3236	-.3674	-.1422	-.2414
.410	-.1582	-.1177	-.2191	-.1968
.590	-.1742	-.1977	-.2169	-.2077
.770	-.1828	-.2169	-.2447	-.2425
.950	-.2009	-.2137	-.2308	-.2564

BETA (7) = 1.000 ALPHA (2) = .000 Q(PSF) = 43.823 PO = 2113.6 RUN NO = 7.0000

SECTION (1)MAIN LND GR DR-I DEPENDENT VARIABLE CP

Y/BML	.0760	.3100	.5820	.8530
X/CML				
.050	-.6771	-.5513	-.7485	-.2589
.230	-.2401	-.2902	-.0845	-.2044
.410	-.1186	-.0877	-.1612	-.1559
.590	-.1378	-.1516	-.1921	-.1787
.770	-.1463	-.1644	-.1890	-.1911
.950	-.1623	-.1612	-.1612	-.1666

BETA (7) = 1.000 ALPHA (3) = 2.060 Q(PSF) = 43.823 PO = 2113.6 RUN NO = 7.0000

SECTION (1)MAIN LND GR DR-I DEPENDENT VARIABLE CP

Y/BML	.0760	.3100	.5820	.8530
X/CML				
.050	-.6209	-.4836	-.6560	-.3565
.230	-.1419	-.2026	-.0322	-.1478
.410	-.0812	-.0599	-.1068	-.1152
.590	-.0961	-.1068	-.1344	-.1349
.770	-.1025	-.1039	-.1259	-.1259
.950	-.1217	-.1078	-.0897	-.1046

0A163B MAIN GEAR DOOR INNER SURFACE (RFPF01)

BETA (7) = 1.000 ALPHA (4) = 4.110 Q(PSF) = 43.823 PO = 2113.6 RUN NO = 7.0000

SECTION (1)MAIN LND GR DR-I DEPENDENT VARIABLE CP

Y/BML	.0760	.3100	.5820	.8530
X/CML				
.050	-.5629	-.4151	-.5565	-.4244
.230	-.0609	-.1322	.0166	-.1131
.410	-.0322	-.0280	-.0545	-.0755
.590	-.0471	-.0641	-.0758	-.0824
.770	-.0545	-.0620	-.0673	-.0567
.950	-.0758	-.0620	-.0375	-.0450

BETA (7) = 1.000 ALPHA (5) = 6.190 Q(PSF) = 43.823 PO = 2113.6 RUN NO = 7.0000

SECTION (1)MAIN LND GR DR-I DEPENDENT VARIABLE CP

Y/BML	.0760	.3100	.5920	.8530
X/CML				
.050	-.4997	-.3531	-.4582	-.5010
.230	.0017	-.0609	.0580	-.0685
.410	.0028	.0208	.0070	-.0251
.590	-.0131	-.0141	-.0184	-.0192
.770	-.0237	-.0173	-.0141	.0049
.950	-.0513	-.0248	.0145	.0049

BETA (7) = 1.000 ALPHA (6) = 8.260 Q(PSF) = 43.823 PO = 2113.6 RUN NO = 7.0000

SECTION (1)MAIN LND GR DR-I DEPENDENT VARIABLE CP

Y/BML	.0760	.3100	.5820	.8530
X/CML				
.050	-.4418	-.2968	-.3611	-.5320
.230	.0537	.0070	.0909	-.0142
.410	.0495	.0686	.0622	.0192
.590	.0348	.0378	.0346	.0380
.770	.0166	.0282	.0431	.0675
.950	-.0141	.0134	.0675	.0675

OA163B MAIN GEAR DOOR INNER SURFACE (RFPF01)

BETA (8) = 1.980 ALPHA (1) = -2.070 Q(PSF) = 43.017 PO = 2113.6 RUN NO = 8.0000

SECTION (1)MAIN LND GR DR-I DEPENDENT VARIABLE CP

Y/BML	.0760	.3100	.5820	.8530
X/CML				
.050	-.7198	-.5906	-.7993	-.2348
.230	-.2727	-.3394	-.1190	-.2210
.410	-.1465	-.1116	-.2027	-.1816
.590	-.1656	-.1805	-.2091	-.1934
.770	-.1752	-.1985	-.2292	-.2281
.950	-.1942	-.1985	-.2122	-.2239

BETA (8) = 1.980 ALPHA (2) = -.010 Q(PSF) = 43.017 PO = 2113.6 RUN NO = 8.0000

SECTION (1)MAIN LND GR DR-I DEPENDENT VARIABLE CP

Y/BML	.0760	.3100	.5820	.8530
X/CML				
.050	-.6812	-.5437	-.7445	-.2316
.230	-.1935	-.2600	-.0702	-.1640
.410	-.1138	-.0865	-.1498	-.1535
.590	-.1302	-.1411	-.1847	-.1748
.770	-.1389	-.1509	-.1738	-.1847
.950	-.1564	-.1520	-.1389	-.1433

BETA (8) = 1.980 ALPHA (3) = 2.060 Q(PSF) = 43.017 PO = 2113.6 RUN NO = 8.0000

SECTION (1)MAIN LND GR DR-I DEPENDENT VARIABLE CP

Y/BML	.0760	.3100	.5820	.8530
X/CML				
.050	-.6276	-.4798	-.6417	-.3601
.230	-.1145	-.1797	-.0199	-.1489
.410	-.0797	-.0623	-.1003	-.1085
.590	-.0971	-.1047	-.1243	-.1267
.770	-.1014	-.1014	-.1134	-.1145
.950	-.1210	-.1036	-.0786	-.0851

OA163B MAIN GEAR DOOR INNER SURFACE (RFPF01)

BETA (8) = 1.980 ALPHA (4) = 4.120 Q(PSF) = 43.017 PO = 2113.6 RUN NO = 8.0000

SECTION (1)MAIN LND GR DR-I DEPENDENT VARIABLE CP

Y/BML	.0760	.3100	.5820	.8530
X/CML				
.050	-.5693	-.4181	-.5465	-.4595
.230	-.0406	-.1015	.0224	-.1106
.410	-.0351	-.0188	-.0395	-.0611
.590	-.0504	-.0580	-.0384	-.0681
.770	-.0602	-.0547	-.0569	-.0471
.950	-.0841	-.0613	-.0406	-.0362

BETA (8) = 1.980 ALPHA (5) = 6.180 Q(PSF) = 43.017 PO = 2113.6 RUN NO = 8.0000

SECTION (1)MAIN LND GR DR-I DEPENDENT VARIABLE CP

Y/BML	.0760	.3100	.5820	.8530
X/CML				
.050	-.5121	-.3539	-.4444	-.5166
.230	.0203	-.0342	.0607	-.0673
.410	.0127	.0312	.0192	-.0187
.590	-.0036	-.0036	.0181	-.0065
.770	-.0178	-.0112	.0007	.0203
.950	-.0472	-.0200	.0301	.0236

BETA (8) = 1.980 ALPHA (6) = 8.280 Q(PSF) = 43.017 PO = 2113.6 RUN NO = 8.0000

SECTION (1)MAIN LND GR DR-I DEPENDENT VARIABLE CP

Y/BML	.0760	.3100	.5820	.8530
X/CML				
.050	-.4483	-.2808	-.3352	-.5390
.230	.0670	.0268	.0898	-.0166
.410	.0616	.0855	.0724	.0217
.590	.0442	.0496	.0452	.0490
.770	.0246	.0365	.0594	.0876
.950	-.0134	.0159	.0800	.0855

OA163B MAIN GEAR DOOR INNER SURFACE (RFPF01)

BETA (9) = 2.990 ALPHA (1) = -2.060 Q(PSF) = 42.788 PO = 2113.6 RUN NO = 9.0000

SECTION (1)MAIN LND GR DR-I DEPENDENT VARIABLE CP

Y/BML	.0760	.3100	.5820	.8530
X/CML				
.050	-.7247	-.5877	-.7943	-.2359
.230	-.2472	-.3147	-.1037	-.2127
.410	-.1395	-.1069	-.1874	-.1773
.590	-.1613	-.1754	-.2124	-.1935
.770	-.1711	-.1852	-.2146	-.2200
.950	-.1885	-.1852	-.1863	-.1918

BETA (9) = 2.990 ALPHA (2) = .000 Q(PSF) = 42.788 PO = 2113.6 RUN NO = 9.0000

SECTION (1)MAIN LND GR DR-I DEPENDENT VARIABLE CP

Y/BML	.0760	.3100	.5820	.8530
X/CML				
.050	-.6730	-.5304	-.7176	-.2422
.230	-.1473	-.2191	-.0602	-.1562
.410	-.1070	-.0841	-.1364	-.1451
.590	-.1233	-.1320	-.1690	-.1602
.770	-.1299	-.1342	-.1560	-.1669
.950	-.1494	-.1375	-.1201	-.1255

BETA (9) = 2.990 ALPHA (3) = 2.080 Q(PSF) = 42.788 PO = 2113.6 RUN NO = 9.0000

SECTION (1)MAIN LND GR DR-I DEPENDENT VARIABLE CP

Y/BML	.0760	.3100	.5820	.8530
X/CML				
.050	-.6252	-.4671	-.6143	-.3004
.230	-.0756	-.1312	-.0145	-.1453
.410	-.0723	-.0516	-.0810	-.1007
.590	-.0865	-.0876	-.0952	-.1149
.770	-.0930	-.0887	-.0930	-.0919
.950	-.1148	-.0919	-.0603	-.0647

OA163B MAIN GEAR DOOR INNER SURFACE (RFPF01)

BETA (9) = 2.990 ALPHA (4) = 4.120 Q(PSF) = 42.788 PO = 2113.6 RUN NO = 9.0000

SECTION (1)MAIN LND GR DR-I DEPENDENT VARIABLE CP

Y/BML	.0760	.3100	.5820	.8530
X/CML				
.050	-.5679	-.4121	-.5221	-.4439
.230	-.0156	-.0657	.0235	-.1148
.410	-.0265	-.0069	-.0243	-.0510
.590	-.0417	-.0450	-.0450	-.0551
.770	-.0528	-.0450	-.0385	-.0276
.950	-.0788	-.0548	-.0101	-.0210

BETA (9) = 2.990 ALPHA (5) = 6.200 Q(PSF) = 42.783 PO = 2113.6 RUN NO = 9.0000

SECTION (1)MAIN LND GR DR-I DEPENDENT VARIABLE CP

Y/BML	.0760	.3100	.5820	.8530
X/CML				
.050	-.5083	-.3423	-.4133	-.5081
.230	.0302	-.0036	.0575	-.0684
.410	.0225	.0444	.0334	-.0136
.590	.0072	.0061	.0029	.0065
.770	-.0145	-.0014	.0149	.0400
.950	-.0462	-.0178	.0433	.0422

BETA (9) = 2.980 ALPHA (6) = 8.260 Q(PSF) = 42.788 PO = 2113.6 RUN NO = 9.0000

SECTION (1)MAIN LND GR DR-I DEPENDENT VARIABLE CP

Y/BML	.0760	.3100	.5920	.8530
X/CML				
.050	-.4517	-.2784	-.3165	-.5365
.230	.0704	.0465	.0857	-.0237
.410	.0672	.0912	.0781	.0258
.590	.0552	.0574	.0792	.0583
.770	.0279	.0410	.0672	.1010
.950	-.0134	.0170	.0781	.1010

OA163B MAIN GEAR DOOR INNER SURFACE (RFPF01)

BETA (10) = 4.050 ALPHA (1) = -2.060 Q(PSF) = 42.907 PO = 2113.7 RUN NO = 10.000

SECTION (1)MAIN LND GR DR-I DEPENDENT VARIABLE CP

Y/BML	.0760	.3100	.5820	.8530
X/CML				
.050	-.7088	-.5723	-.7879	-.1897
.230	-.1910	-.2668	-.1000	-.1846
.410	-.1347	-.1054	-.1715	-.1695
.590	-.1542	-.1639	-.1931	-.1867
.770	-.1585	-.1682	-.1942	-.2116
.950	-.1791	-.1715	-.1639	-.1650

BETA (10) = 4.040 ALPHA (2) = .000 Q(PSF) = 42.907 PO = 2113.7 RUN NO = 10.000

SECTION (1)MAIN LND GR DR-I DEPENDENT VARIABLE CP

Y/BML	.0760	.3100	.5820	.8530
X/CML				
.050	-.6685	-.5229	-.6880	-.2872
.230	-.1144	-.1731	-.0579	-.1579
.410	-.1035	-.0840	-.1231	-.1317
.590	-.1198	-.1274	-.1416	-.1488
.770	-.1220	-.1220	-.1361	-.1481
.950	-.1426	-.1231	-.1035	-.1024

BETA (10) = 4.040 ALPHA (3) = 2.050 Q(PSF) = 42.907 PO = 2113.7 RUN NO = 10.000

SECTION (1)MAIN LND GR DR-I DEPENDENT VARIABLE CP

Y/BML	.0760	.3100	.5820	.8530
X/CML				
.050	-.6241	-.4708	-.5991	-.3761
.230	-.0503	-.0938	-.0221	-.1438
.410	-.0644	-.0460	-.0710	-.0873
.590	-.0775	-.0818	-.0710	-.0984
.770	-.0851	-.0796	-.0786	-.0786
.950	-.1112	-.0862	-.0764	-.0325

DATE 27 APR 77 OA163B PRESSURE DATA LISTING

OA163B MAIN GEAR DOOR INNER SURFACE (RFPF01)

BETA (10) = 4.050 ALPHA (4) = 4.110 Q(PSF) = 42.907 PO = 2113.7 RUN NO = 10.000

SECTION (1)MAIN LND GR DR-I DEPENDENT VARIABLE CP

Y/BML	.0760	.3100	.5820	.8530
X/CML				
.050	-.5603	-.3994	-.4864	-.5047
.230	-.0047	-.0362	.0202	-.1146
.410	-.0188	.0039	-.0101	-.0518
.590	-.0297	-.0308	-.0308	-.0358
.770	-.0460	-.0373	-.0253	-.0123
.950	-.0767	-.0503	.0039	-.0003

BETA (10) = 4.050 ALPHA (5) = 6.210 Q(PSF) = 42.907 PO = 2113.7 RUN NO = 10.000

SECTION (1)MAIN LND GR DR-I DEPENDENT VARIABLE CP

Y/BML	.0760	.3100	.5820	.8530
X/CML				
.050	-.4931	-.3230	-.3732	-.5709
.230	.0377	.0127	.0574	-.0744
.410	.0334	.0585	.0443	-.0075
.590	.0203	.0236	.0148	.0157
.770	-.0069	.0039	.0301	.0595
.950	-.0450	-.0156	.0541	.0606

BETA (10) = 4.050 ALPHA (6) = 8.280 Q(PSF) = 42.907 PO = 2113.7 RUN NO = 10.000

SECTION (1)MAIN LND GR DR-I DEPENDENT VARIABLE CP

Y/BML	.0760	.3100	.5820	.8530
X/CML				
.050	-.4371	-.2632	-.2817	-.5396
.230	.0767	.0626	.0767	-.0539
.410	.0800	.1017	.0832	.0328
.590	.0658	.0691	.0658	.0692
.770	.0333	.0485	.0767	.1093
.950	-.0112	.0159	.0995	.1158

OA163B MAIN GEAR DOOR INNER SURFACE (RFPF01)

BETA (11) = 5.010 ALPHA (1) = -2.070 Q(PSF) = 42.887 PO = 2113.6 RUN NO = 11.000

SECTION (1)MAIN LND GR DR-I DEPENDENT VARIABLE CP

Y/BML	.0760	.3100	.5820	.8530
X/CML				
.050	-.7115	-.5691	-.7626	-.2642
.230	-.1406	-.1982	-.1069	-.1662
.410	-.1330	-.1080	-.1591	-.1662
.590	-.1460	-.1580	-.1852	-.1793
.770	-.1504	-.1569	-.1743	-.1928
.950	-.1700	-.1558	-.1395	-.1460

BETA (11) = 5.010 ALPHA (2) = .010 Q(PSF) = 42.887 PO = 2113.6 RUN NO = 11.000

SECTION (1)MAIN LND GR DR-I DEPENDENT VARIABLE CP

Y/BML	.0760	.3100	.5820	.8530
X/CML				
.050	-.6796	-.5252	-.6719	-.3529
.230	-.0873	-.1133	-.0677	-.1630
.410	-.0981	-.0807	-.1101	-.1196
.590	-.1057	-.1144	-.1296	-.1368
.770	-.1123	-.1123	-.1144	-.1199
.950	-.1351	-.1166	-.0797	-.0840

BETA (11) = 5.010 ALPHA (3) = 2.050 Q(PSF) = 42.887 PO = 2113.6 RUN NO = 11.000

SECTION (1)MAIN LND GR DR-I DEPENDENT VARIABLE CP

Y/BML	.0760	.3100	.5820	.8530
X/CML				
.050	-.6179	-.4529	-.5604	-.4725
.230	-.0394	-.0665	-.0133	-.1497
.410	-.0557	-.0340	-.0503	-.0781
.590	-.0687	-.0709	-.0785	-.0892
.770	-.0774	-.0598	-.0644	-.0600
.950	-.1045	-.0774	-.0307	-.0372

OA163B MAIN GEAR DOOR INNER SURFACE (RFPF01)

BETA (11) = 5.010 ALPHA (4) = 4.130 Q(PSF) = 42.887 PO = 2113.6 RUN NO = 11.000

SECTION (1)MAIN LND GR DR-I DEPENDENT VARIABLE CP

Y/BML	.0760	.3100	.5820	.8530
X/CML				
.050	-.5509	-.3801	-.4399	-.5505
.230	.0028	-.0188	.0290	-.1187
.410	-.0047	.0203	.0061	-.0358
.590	-.0188	-.0177	-.0210	-.0237
.770	-.0384	-.0297	-.0112	.0126
.950	-.0732	-.0482	.0159	.0181

BETA (11) = 5.010 ALPHA (5) = 6.180 Q(PSF) = 42.887 PO = 2113.6 RUN NO = 11.000

SECTION (1)MAIN LND GR DR-I DEPENDENT VARIABLE CP

Y/BML	.0760	.3100	.5820	.8530
X/CML				
.050	-.5076	-.3345	-.3443	-.6044
.230	.0409	.0322	.0475	-.0874
.410	.0388	.0627	.0453	.0066
.590	.0246	.0224	.0235	.0228
.770	-.0025	.0050	.0377	.0682
.950	-.0460	-.0156	.0649	.0769

BETA (11) = 5.010 ALPHA (6) = 8.250 Q(PSF) = 42.887 PO = 2113.6 RUN NO = 11.000

SECTION (1)MAIN LND GR DR-I DEPENDENT VARIABLE CP

Y/BML	.0760	.3100	.5820	.8530
X/CML				
.050	-.4974	-.3364	-.3821	-.3684
.230	.0855	.0964	.0409	-.0307
.410	.0888	.1094	.0822	.0480
.590	.0779	.0812	.0768	.0854
.770	.0398	.0540	.0888	.1225
.950	-.0112	.0159	.1007	.1312

OA163B MAIN GEAR DOOR INNER SURFACE (RFPF02) (27 APR 77)

REFERENCE DATA

SREF =	2690.0000 SQ.FT.	XMRP =	1076.7000 IN. XO		
LREF =	474.8100 INCHES	YMRP =	.0000 IN. YO		
BREF =	936.6800 INCHES	ZMRP =	375.0000 IN. ZO		
SCALE =	.0405				

PARAMETRIC DATA

SPOBRK =	25.000	BDFLAP =	.000
ELV-L =	.000	ELV-R =	.000
PHI-N =	30.800	THETAN =	5.000
PHI-ML =	36.000	THETML =	5.600
PHI-MR =	36.000	THETMR =	5.600

BETA (1) = -5.050 ALPHA (1) = -2.070 Q(PSF) = 42.822 PO = 2113.6 RUN NO = 12.000

SECTION (1)MAIN LND GR DR-I DEPENDENT VARIABLE CP

Y/BML	.0760	.3100	.5820	.8530
X/CML				
.050	-.7427	-.7154	-.9788	-.4880
.230	-.5054	-.5250	-.2572	-.2826
.410	-.1864	-.1734	-.2888	-.2766
.590	-.2213	-.2811	-.3084	-.3039
.770	-.2626	-.3062	-.3127	-.3367
.950	-.2822	-.3236	-.3247	-.3377

BETA (1) = -5.050 ALPHA (2) = -.010 Q(PSF) = 42.822 PO = 2113.6 RUN NO = 12.000

SECTION (1)MAIN LND GR DR-I DEPENDENT VARIABLE CP

Y/BML	.0760	.3100	.5820	.8530
X/CML				
.050	-.7201	-.6395	-.8919	-.1894
.230	-.4733	-.4548	-.1906	-.5400
.410	-.1667	-.1254	-.2384	-.2338
.590	-.1775	-.2254	-.2667	-.2268
.770	-.2091	-.2471	-.2536	-.2852
.950	-.2286	-.2645	-.2710	-.2982

BETA (1) = -5.050 ALPHA (3) = 2.060 Q(PSF) = 42.822 PO = 2113.6 RUN NO = 12.000

SECTION (1)MAIN LND GR DR-I DEPENDENT VARIABLE CP

Y/BML	.0760	.3100	.5820	.8530
X/CML				
.050	-.6994	-.5716	-.8097	-.6075
.230	-.4121	-.3783	-.1238	-.1811
.410	-.1369	-.0844	-.1806	-.1760
.590	-.1412	-.1664	-.2079	-.2065
.770	-.1609	-.1871	-.2035	-.2330
.950	-.1806	-.2035	-.2177	-.2472

OA163B MAIN GEAR DOOR INNER SURFACE (RFPF02)

BETA (1) = -5.050 ALPHA (4) = 4.120 Q(PSF) = 42.822 PO = 2113.6 RUN NO = 12.000

SECTION (1)MAIN LND GR DR-I DEPENDENT VARIABLE CP

Y/BML	.0760	.3100	.5820	.8530
X/CML				
.050	-.6534	-.5041	-.7058	-.4625
.230	-.3351	-.2904	-.0592	-.1240
.410	-.0985	-.0461	-.1323	-.1240
.590	-.0974	-.1083	-.1279	-.1504
.770	-.1137	-.1301	-.1552	-.1693
.950	-.1344	-.1399	-.1617	-.1824

BETA (1) = -5.050 ALPHA (5) = 6.220 Q(PSF) = 42.822 PO = 2113.6 RUN NO = 12.000

SECTION (1)MAIN LND GR DR-I DEPENDENT VARIABLE CP

Y/BML	.0760	.3100	.5820	.8530
X/CML				
.050	-.5846	-.4282	-.6226	-.5606
.230	-.2197	-.1980	-.0036	-.1054
.410	-.0405	-.0058	-.0698	-.0731
.590	-.0514	-.0546	-.0948	-.0922
.770	-.0644	-.0720	-.0948	-.0763
.950	-.0829	-.0796	-.0872	-.0850

BETA (1) = -5.050 ALPHA (6) = 8.270 Q(PSF) = 42.822 PO = 2113.6 RUN NO = 12.000

SECTION (1)MAIN LND GR DR-I DEPENDENT VARIABLE CP

Y/BML	.0760	.3100	.5820	.8530
X/CML				
.050	-.5167	-.3577	-.5255	-.7102
.230	-.1234	-.1223	.0475	-.0753
.410	.0061	.0257	-.0069	-.0328
.590	-.0058	-.0080	-.0101	-.0419
.770	-.0156	-.0156	-.0319	-.0025
.950	-.0374	-.0232	-.0134	-.0276

DATE 27 APR 77 OA163B PRESSURE DATA LISTING

OA163B MAIN GEAR DOOR INNER SURFACE (RFPF02)

BETA (2) = -4.040 ALPHA (1) = -2.030 Q(PSF) = 42.870 PO = 2113.6 RUN NO = 13.000

SECTION (1)MAIN LND GR DR-I DEPENDENT VARIABLE CP

Y/BML	.0760	.3100	.5820	.8530
X/CML				
.050	-.7564	-.6933	-.9587	-.5100
.230	-.4985	-.5040	-.2331	-.2754
.410	-.1907	-.1570	-.2788	-.2643
.590	-.2059	-.2625	-.2810	-.2885
.770	-.2396	-.2875	-.2995	-.3223
.950	-.2614	-.3038	-.3038	-.3288

BETA (2) = -4.040 ALPHA (2) = .020 Q(PSF) = 42.870 PO = 2113.6 RUN NO = 13.000

SECTION (1)MAIN LND GR DR-I DEPENDENT VARIABLE CP

Y/BML	.0760	.3100	.5820	.8530
X/CML				
.050	-.7373	-.6286	-.8699	-.5904
.230	-.4525	-.4297	-.1688	-.2216
.410	-.1666	-.1188	-.2199	-.2125
.590	-.1731	-.2047	-.2318	-.2388
.770	-.1938	-.2308	-.2481	-.2731
.950	-.2145	-.2471	-.2460	-.2884

BETA (2) = -4.040 ALPHA (3) = 2.060 Q(PSF) = 42.870 PO = 2113.6 RUN NO = 13.000

SECTION (1)MAIN LND GR DR-I DEPENDENT VARIABLE CP

Y/BML	.0760	.3100	.5820	.8530
X/CML				
.050	-.7080	-.5632	-.7788	-.4871
.230	-.3748	-.3476	-.1070	-.1643
.410	-.1364	-.0831	-.1723	-.1643
.590	-.1353	-.1517	-.1963	-.1896
.770	-.1527	-.1745	-.1985	-.2257
.950	-.1723	-.1876	-.2061	-.2377

OA163B MAIN GEAR DOOR INNER SURFACE (RFPF02)

BETA (2) = -4.040 ALPHA (4) = 4.140 Q(PSF) = 42.870 PO = 2113.6 RUN NO = 13.000

SECTION (1)MAIN LND GR DR-I DEPENDENT VARIABLE CP

Y/BML	.0760	.3100	.5820	.8530
X/CML				
.050	-.6462	-.4885	-.6973	-.5502
.230	-.2852	-.2656	-.0416	-.1227
.410	-.0830	-.0460	-.1178	-.1136
.590	-.0895	-.0971	-.1341	-.1308
.770	-.1036	-.1199	-.1460	-.1449
.950	-.1243	-.1297	-.1449	-.1569

BETA (2) = -4.040 ALPHA (5) = 6.220 Q(PSF) = 42.870 PO = 2113.6 RUN NO = 13.000

SECTION (1)MAIN LND GR DR-I DEPENDENT VARIABLE CP

Y/BML	.0760	.3100	.5820	.8530
X/CML				
.050	-.5824	-.4236	-.6118	-.6638
.230	-.1777	-.1777	.0018	-.1126
.410	-.0341	-.0101	-.0536	-.0773
.590	-.0449	-.0504	-.0841	-.0874
.770	-.0536	-.0634	-.0863	-.0569
.950	-.0765	-.0689	-.0591	-.0732

BETA (2) = -4.050 ALPHA (6) = 8.270 Q(PSF) = 42.870 PO = 2113.6 RUN NO = 13.000

SECTION (1)MAIN LND GR DR-I DEPENDENT VARIABLE CP

Y/BML	.0760	.3100	.5820	.8530
X/CML				
.050	-.5027	-.3483	-.5005	-.7977
.230	-.0775	-.1047	.0550	-.0651
.410	.0191	.0333	.0115	-.0226
.590	.0039	.0007	-.0155	-.0257
.770	-.0068	-.0079	-.0155	.0137
.950	-.0308	-.0155	.0050	-.0166

OA163B MAIN GEAR DOOR INNER SURFACE (RFPF02)

BETA (3) = -2.970 ALPHA (1) = -2.060 Q(PSF) = 42.832 PO = 2113.6 RUN NO = 14.000

SECTION (1)MAIN LND GR DR-I DEPENDENT VARIABLE CP

Y/BML	.0760	.3100	.5820	.8530
X/CML				
.050	-.7943	-.6820	-.9535	-.5468
.230	-.4922	-.4813	-.2141	-.2690
.410	-.1977	-.1530	-.2675	-.2548
.590	-.2032	-.2457	-.2817	-.2741
.770	-.2294	-.2752	-.2937	-.3079
.950	-.2501	-.2893	-.2992	-.3264

BETA (3) = -2.970 ALPHA (2) = .010 Q(PSF) = 42.832 PO = 2113.6 RUN NO = 14.000

SECTION (1)MAIN LND GR DR-I DEPENDENT VARIABLE CP

Y/BML	.0760	.3100	.5820	.8530
X/CML				
.050	-.7478	-.6153	-.8467	-.5720
.230	-.4219	-.3958	-.1492	-.2064
.410	-.1687	-.1155	-.2133	-.2014
.590	-.1655	-.1926	-.2263	-.2226
.770	-.1850	-.2155	-.2426	-.2643
.950	-.2057	-.2296	-.2480	-.2785

BETA (3) = -2.970 ALPHA (3) = 2.070 Q(PSF) = 42.832 PO = 2113.6 RUN NO = 14.000

SECTION (1)MAIN LND GR DR-I DEPENDENT VARIABLE CP

Y/BML	.0760	.3100	.5820	.8530
X/CML				
.050	-.7019	-.5439	-.7629	-.5572
.230	-.3293	-.3184	-.0864	-.1543
.410	-.1223	-.0798	-.1594	-.1513
.590	-.1245	-.1387	-.1583	-.1725
.770	-.1398	-.1605	-.1888	-.2106
.950	-.1605	-.1692	-.1866	-.2160

OA163B MAIN GEAR DOOR INNER SURFACE (RFPF02)

BETA (3) = -2.970 ALPHA (4) = 4.130 Q(PSF) = 42.832 PO = 2113.6 RUN NO = 14.000

SECTION (1)MAIN LND GR DR-I DEPENDENT VARIABLE CP

Y/BML	.0760	.3100	.5820	.8530
X/CML				
.050	-.6373	-.1114	-.6820	-.6299
.230	-.2355	-.2954	-.0319	-.1401
.410	-.0689	-.0428	-.1016	-.1057
.590	-.0831	-.0907	-.1277	-.1239
.770	-.0940	-.1070	-.1321	-.1168
.950	-.1157	-.1157	-.1234	-.1223

BETA (3) = -2.970 ALPHA (5) = 6.200 Q(PSF) = 42.832 PO = 2113.6 RUN NO = 14.000

SECTION (1)MAIN LND GR DR-I DEPENDENT VARIABLE CP

Y/BML	.0760	.3100	.5820	.8530
X/CML				
.050	-.5653	-.4096	-.5718	-.7916
.230	-.1288	-.1582	.0159	-.1097
.410	-.0221	-.0079	-.0406	-.0702
.590	-.0352	-.0450	-.0656	-.0722
.770	-.0482	-.0526	-.0645	-.0384
.950	-.0700	-.0580	-.0417	-.0613

BETA (3) = -2.970 ALPHA (6) = 8.280 Q(PSF) = 42.832 PO = 2113.6 RUN NO = 14.000

SECTION (1)MAIN LND GR DR-I DEPENDENT VARIABLE CP

Y/BML	.0760	.3100	.5820	.8530
X/CML				
.050	-.4954	-.3366	-.4758	-.8277
.230	-.0308	-.0841	.0572	-.0560
.410	.0268	.0398	.0268	-.0105
.590	.0115	.0115	.0257	-.0095
.770	-.0025	-.0003	-.0014	.0268
.950	-.0264	-.0123	.0007	-.0058

OA163B MAIN GEAR DOOR INNER SURFACE (RFPF02)

BETA (4) = -2.040 ALPHA (1) = -2.060 Q(PSF) = 42.852 PO = 2113.6 RUN NO = 15.000

SECTION (1)MAIN LND GR DR-I DEPENDENT VARIABLE CP

Y/BML	.0760	.3100	.5820	.8530
X/CML				
.050	-.7881	-.6575	-.9241	-.5627
.230	-.4573	-.4475	-.1897	-.2502
.410	-.1929	-.1418	-.2527	-.2411
.590	-.1918	-.2234	-.2560	-.2563
.770	-.2158	-.2506	-.2711	-.2930
.950	-.2354	-.2680	-.2745	-.3137

BETA (4) = -2.030 ALPHA (2) = .010 Q(PSF) = 42.852 PO = 2113.6 RUN NO = 15.000

SECTION (1)MAIN LND GR DR-I DEPENDENT VARIABLE CP

Y/BML	.0760	.3100	.5820	.8530
X/CML				
.050	-.7503	-.5999	-.8277	-.5495
.230	-.3786	-.3753	-.1257	-.1949
.410	-.1573	-.1126	-.2020	-.1888
.590	-.1573	-.1769	-.2085	-.2071
.770	-.1747	-.1987	-.2325	-.2500
.950	-.1955	-.2129	-.2314	-.2641

BETA (4) = -2.040 ALPHA (3) = 2.080 Q(PSF) = 42.852 PO = 2113.6 RUN NO = 15.000

SECTION (1)MAIN LND GR DR-I DEPENDENT VARIABLE CP

Y/BML	.0760	.3100	.5820	.8530
X/CML				
.050	-.6932	-.5320	-.7477	-.6049
.230	-.2879	-.4612	-.0690	-.1584
.410	-.1082	-.0766	-.1452	-.1411
.590	-.1169	-.1289	-.1550	-.1594
.770	-.1321	-.1507	-.1790	-.1888
.950	-.1550	-.1572	-.1779	-.1932

OA163B MAIN GEAR DOOR INNER SURFACE (RFPF02)

BETA (4) = -2.040 ALPHA (4) = 4.120 Q(PSF) = 42.852 PO = 2113.6 RUN NO = 15.000

SECTION (1)MAIN LND GR DR-I DEPENDENT VARIABLE CP

Y/BML	.0760	.3100	.5820	.8530
X/CML				
.050	-.6273	-.4646	-.6544	-.6799
.230	-.1815	-.2086	-.0209	-.1405
.410	-.0589	-.0394	-.0838	-.1002
.590	-.0730	-.0838	-.1196	-.1224
.770	-.0849	-.0925	-.1175	-.1023
.950	-.1088	-.1012	-.0914	-.1023

BETA (4) = -2.040 ALPHA (5) = 6.200 Q(PSF) = 42.852 PO = 2113.6 RUN NO = 15.000

SECTION (1)MAIN LND GR DR-I DEPENDENT VARIABLE CP

Y/BML	.0760	.3100	.5820	.8530
X/CML				
.050	-.5571	-.0297	-.5441	-.8332
.230	-.0830	-.1341	.0224	-.0914
.410	-.0145	-.0036	-.0232	-.0540
.590	-.0286	-.0362	-.0221	-.0590
.770	-.0416	-.0395	-.0493	-.0286
.950	-.0645	-.0482	-.0482	-.0493

BETA (4) = -2.040 ALPHA (6) = 8.290 Q(PSF) = 42.852 PO = 2113.6 RUN NO = 15.000

SECTION (1)MAIN LND GR DR-I DEPENDENT VARIABLE CP

Y/BML	.0760	.3100	.5820	.8530
X/CML				
.050	-.4850	-.3260	-.4436	-.8062
.230	.0050	-.0591	.0606	-.0368
.410	.0366	.0508	.0442	.0076
.590	.0192	.0159	.0105	.0066
.770	.0028	.0116	.0116	.0388
.950	-.0221	-.0025	.0312	.0039

OA163B MAIN GEAR DOOR INNER SURFACE (RFPF02)

BETA (5) = -1.030 ALPHA (1) = -2.040 Q(PSF) = 42.897 PO = 2113.7 RUN NO = 16.000

SECTION (1)MAIN LND GR DR-I DEPENDENT VARIABLE CP

Y/BML	.0760	.3100	.5820	.8530
X/CML				
.050	-.7962	-.6466	-.8905	-.5375
.230	-.4221	-.4275	-.1673	-.2372
.410	-.1879	-.1391	-.2399	-.2281
.590	-.1890	-.2118	-.2399	-.2423
.770	-.2053	-.2378	-.2714	-.2768
.950	-.2280	-.2540	-.2649	-.3050

BETA (5) = -1.040 ALPHA (2) = .020 Q(PSF) = 42.897 PO = 2113.7 RUN NO = 16.000

SECTION (1)MAIN LND GR DR-I DEPENDENT VARIABLE CP

Y/BML	.0760	.3100	.5820	.8530
X/CML				
.050	-.7481	-.5837	-.7894	-.5952
.230	-.3312	-.3530	-.1037	-.1916
.410	-.1418	-.1059	-.1832	-.1764
.590	-.1516	-.1647	-.1875	-.1936
.770	-.1969	-.1864	-.2213	-.2289
.950	-.1664	-.1984	-.2169	-.2398

BETA (5) = -1.040 ALPHA (3) = 2.060 Q(PSF) = 42.897 PO = 2113.7 RUN NO = 16.000

SECTION (1)MAIN LND GR DR-I DEPENDENT VARIABLE CP

Y/BML	.0760	.3100	.5820	.8530
X/CML				
.050	-.6804	-.1453	-.7447	-.6214
.230	-.2325	-.2695	-.0570	-.1645
.410	-.0941	-.0755	-.1322	-.1301
.590	-.1104	-.1224	-.1322	-.1564
.770	-.1246	-.1366	-.1693	-.1671
.950	-.1475	-.1442	-.1649	-.1562

OA163B MAIN GEAR DOOR INNER SURFACE (RFPF02)

BETA (5) = -1.030 ALPHA (4) = 4.120 Q(PSF) = 42.897 PO = 2113.7 RUN NO = 16.000

SECTION (1)MAIN LND GR DR-I DEPENDENT VARIABLE CP

Y/BML	.0760	.3100	.5820	.8530
X/CML				
.050	-.6086	-.0720	-.6228	-.7970
.230	-.1372	-.1839	-.0123	-.1266
.410	-.0514	-.0405	-.0709	-.0903
.590	-.0688	-.0753	-.0666	-.1084
.770	-.0774	-.0818	-.1003	-.0905
.950	-.0992	-.0905	-.1024	-.0937

BETA (5) = -1.040 ALPHA (5) = 6.200 Q(PSF) = 42.897 PO = 2113.7 RUN NO = 16.000

SECTION (1)MAIN LND GR DR-I DEPENDENT VARIABLE CP

Y/BML	.0760	.3100	.5820	.8530
X/CML				
.050	-.5561	-.0156	-.5224	-.8452
.230	-.0439	-.1594	.0236	-.0804
.410	-.0090	.0028	-.0101	-.0419
.590	-.0254	-.0297	-.0047	-.0460
.770	-.0385	-.0363	-.0363	-.0123
.950	-.0635	-.0450	-.0439	-.0363

BETA (5) = -1.040 ALPHA (6) = 8.270 Q(PSF) = 42.897 PO = 2113.7 RUN NO = 16.000

SECTION (1)MAIN LND GR DR-I DEPENDENT VARIABLE CP

Y/BML	.0760	.3100	.5820	.8530
X/CML				
.050	-.4782	-.1910	-.4164	-.8202
.230	.0288	-.3254	.0581	-.0246
.410	.0375	.0548	.0527	.0096
.590	.0223	.0245	.0483	.0156
.770	.0061	.0169	.0245	.0505
.950	-.0209	.0007	.0256	.0158

0A163B MAIN GEAR DOOR INNER SURFACE (RFPF02)

BETA (6) = .000 ALPHA (1) = -2.060 Q(PSF) = 42.860 PO = 2113.7 RUN NO = 17.000

SECTION (1)MAIN LND GR DR-I DEPENDENT VARIABLE CP

Y/BML	.0760	.3100	.5820	.8530
X/CML				
.050	-.7938	-.2572	-.8762	-.5414
.230	-.3711	-.4025	-.1488	-.2281
.410	-.1727	-.1326	-.2269	-.2150
.590	-.1814	-.2020	-.2269	-.2271
.770	-.1965	-.2247	-.2627	-.2627
.950	-.2182	-.2377	-.2616	-.2876

BETA (6) = -.010 ALPHA (2) = .020 Q(PSF) = 42.860 PO = 2113.7 RUN NO = 17.000

SECTION (1)MAIN LND GR DR-I DEPENDENT VARIABLE CP

Y/BML	.0760	.3100	.5820	.8530
X/CML				
.050	-.7337	-.5696	-.7891	-.6063
.230	-.2774	-.3241	-.0916	-.1953
.410	-.1264	-.1014	-.1687	-.1630
.590	-.1437	-.1546	-.1698	-.1761
.770	-.1568	-.1763	-.2089	-.2100
.950	-.1785	-.1850	-.2089	-.2089

BETA (6) = -.010 ALPHA (3) = 2.060 Q(PSF) = 42.860 PO = 2113.7 RUN NO = 17.000

SECTION (1)MAIN LND GR DR-I DEPENDENT VARIABLE CP

Y/BML	.0760	.3100	.5820	.8530
X/CML				
.050	-.6696	-.1257	-.6990	-.6589
.230	-.1845	-.2390	-.0450	-.1605
.410	-.0864	-.0712	-.1104	-.1260
.590	-.1028	-.1126	-.1115	-.1544
.770	-.1148	-.1235	-.1464	-.1453
.950	-.1366	-.1300	-.1507	-.1279

OA163B MAIN GEAR DOUR INNER SURFACE (RFPF02)

BETA (6) = -.010 ALPHA (4) = 4.140 Q(PSF) = 42.860 PO = 2113.7 RUN NO = 17.000

SECTION (1)MAIN LND GR DR-I DEPENDENT VARIABLE CP

Y/BML	.0760	.3100	.5820	.8530
X/CML				
.050	-.6180	-.0550	-.6016	-.8244
.230	-.0954	-.4114	-.0364	-.1193
.410	-.0484	-.0375	-.0331	-.0898
.590	-.0670	-.0725	-.0615	-.0969
.770	-.0758	-.0758	-.0867	-.0714
.950	-.0965	-.0845	-.0845	-.0703

BETA (6) = -.010 ALPHA (5) = 6.200 Q(PSF) = 42.860 PO = 2113.7 RUN NO = 17.000

SECTION (1)MAIN LND GR DR-I DEPENDENT VARIABLE CP

Y/BML	.0760	.3100	.5820	.8530
X/CML				
.050	-.5443	-.0014	-.4889	-.8460
.230	-.0155	-.3554	.0289	-.0751
.410	-.0003	.0126	.0061	-.0327
.590	-.0177	-.0210	.0104	-.0347
.770	-.0307	-.0242	-.0220	-.0090
.950	-.0568	-.0383	-.0242	-.0275

BETA (6) = -.010 ALPHA (6) = 8.270 Q(PSF) = 42.860 PO = 2113.7 RUN NO = 17.000

SECTION (1)MAIN LND GR DR-I DEPENDENT VARIABLE CP

Y/BML	.0760	.3100	.5820	.8530
X/CML				
.050	-.4815	.0529	-.3857	-.7745
.230	.0475	-.0134	.0584	-.0176
.410	.0497	.0671	.0627	.0177
.590	.0333	.0333	.0638	.0258
.770	.0137	.0224	.0366	.0627
.950	-.0199	.0050	.0314	.0301

OA163B MAIN GEAR DOOR INNER SURFACE (RFPF02)

BETA (7) = .980 ALPHA (1) = -2.070 Q(PSF) = 42.917 PO = 2113.7 RUN NO = 18.000

SECTION (1)MAIN LND GR DR-I DEPENDENT VARIABLE CP

Y/BML	.0760	.3100	.5820	.8530
X/CML				
.050	-.7796	-.2388	-.8588	-.5494
.230	-.3222	-.5965	-.1326	-.2271
.410	-.1597	-.1282	-.1683	-.2009
.590	-.1748	-.1900	-.2052	-.2089
.770	-.1878	-.2117	-.2269	-.2474
.950	-.2084	-.2182	-.2431	-.2518

BETA (7) = .980 ALPHA (2) = .020 Q(PSF) = 42.917 PO = 2113.7 RUN NO = 18.000

SECTION (1)MAIN LND GR DR-I DEPENDENT VARIABLE CP

Y/BML	.0760	.3100	.5820	.8530
X/CML				
.050	-.7225	-.1752	-.7616	-.6434
.230	-.2316	-.2903	-.0742	-.1922
.410	-.1165	-.0959	-.1513	-.1538
.590	-.1360	-.1458	-.1524	-.1740
.770	-.1491	-.1611	-.1947	-.1958
.950	-.1697	-.1697	-.2002	-.1697

BETA (7) = .980 ALPHA (3) = 2.060 Q(PSF) = 42.917 PO = 2113.7 RUN NO = 18.000

SECTION (1)MAIN LND GR DR-I DEPENDENT VARIABLE CP

Y/BML	.0760	.3100	.5820	.8530
X/CML				
.050	-.6648	-.1005	-.6691	-.7263
.230	-.1376	-.4600	-.0352	-.1472
.410	-.0809	-.0679	-.1005	-.1229
.590	-.0984	-.1049	-.1016	-.1401
.770	-.1092	-.1136	-.1332	-.1354
.950	-.1321	-.1191	-.1310	-.1169

OA163B MAIN GEAR DOOR INNER SURFACE (RFPF02)

BETA (7) = .980 ALPHA (4) = 4.120 Q(PSF) = 42.917 PO = 2113.7 RUN NO = 18.000

SECTION (1)MAIN LND GR DR-I DEPENDENT VARIABLE CP

Y/BML	.0760	.3100	.5820	.8530
X/CML				
.050	-.5995	-.0471	-.5712	-.7644
.230	-.0580	-.1308	.0007	-.1116
.410	-.0395	-.0264	-.0427	-.0752
.590	-.0558	-.0623	-.0416	-.0812
.770	-.0656	-.0623	-.0667	-.0601
.950	-.0927	-.0754	-.0732	-.0645

BETA (7) = .980 ALPHA (5) = 6.200 Q(PSF) = 42.917 PO = 2113.7 RUN NO = 18.000

SECTION (1)MAIN LND GR DR-I DEPENDENT VARIABLE CP

Y/BML	.0760	.3100	.5820	.8530
X/CML				
.050	-.5400	.0083	-.4606	-.8317
.230	.0061	-.0623	.0290	-.0611
.410	.0061	.0246	.0203	-.0237
.590	-.0079	-.0112	.0213	-.0196
.770	-.0232	-.0177	-.0069	.0083
.950	-.0536	-.0341	-.0058	-.0177

BETA (7) = .980 ALPHA (6) = 8.270 Q(PSF) = 42.917 PO = 2113.7 RUN NO = 18.000

SECTION (1)MAIN LND GR DR-I DEPENDENT VARIABLE CP

Y/BML	.0760	.3100	.5820	.8530
X/CML				
.050	-.4775	.0549	-.3658	-.7181
.230	.0581	.0148	.0646	-.0105
.410	.0538	.0766	.0712	.0267
.590	.0386	.0440	.0690	.0398
.770	.0180	.0299	.0473	.0755
.950	-.0177	.0072	.0516	.0440

OA1638 MAIN GEAR DOOR INNER SURFACE (REFER

BETA (8) = 1.970 ALPHA (1) = -2.060 Q(PSF) = 42.822 PO = 2113.7 RUN NO = 19.000

SECTION (1)MAIN LND GR DR-I DEPENDENT VARIABLE CP

Y/BML	.0760	.3100	.5820	.8530
X/CML				
.050	-.7672	-.2247	-.8260	-.5815
.230	-.2792	-.3456	-.1103	-.2069
.410	-.1474	-.1223	-.1920	-.1837
.590	-.1659	-.1768	-.1866	-.1958
.770	-.1790	-.1964	-.2313	-.2345
.950	-.2008	-.2029	-.2291	-.2280

BETA (8) = 1.970 ALPHA (2) = .010 Q(PSF) = 42.822 PO = 2113.7 RUN NO = 19.000

SECTION (1)MAIN LND GR DR-I DEPENDENT VARIABLE CP

Y/BML	.0760	.3100	.5820	.8530
X/CML				
.050	-.7024	-.1473	-.7275	-.5933
.230	-.1810	-.2518	-.0591	-.1754
.410	-.1081	-.0907	-.1331	-.1491
.590	-.1277	-.1386	-.1386	-.1673
.770	-.1386	-.1484	-.1690	-.1821
.950	-.1603	-.1538	-.1712	-.1473

BETA (8) = 1.970 ALPHA (3) = 2.070 Q(PSF) = 42.822 PO = 2113.7 RUN NO = 19.000

SECTION (1)MAIN LND GR DR-I DEPENDENT VARIABLE CP

Y/BML	.0760	.3100	.5820	.8530
X/CML				
.050	-.6492	-.0778	-.6372	-.6815
.230	-.0985	-.1705	-.0243	-.1464
.410	-.0734	-.0603	-.0843	-.1078
.590	-.0898	-.0374	-.0810	-.1241
.770	-.0996	-.0985	-.1094	-.1137
.950	-.1235	-.1072	-.1083	-.0996

OA163B MAIN GEAR DOOR INNER SURFACE (RFPF02)

BETA (8) = 1.970 ALPHA (4) = 4.130 Q(PSF) = 42.822 PO = 2113.7 RUN NO = 19.000

SECTION (1)MAIN LND GR DR-I DEPENDENT VARIABLE CP

Y/BML	.0760	.3100	.5820	.8530
X/CML				
.050	-.5934	-.0232	-.5357	-.8327
.230	-.0341	-.1059	.0018	-.1015
.410	-.0341	-.0166	-.0275	-.0550
.590	-.0482	-.0482	-.0232	-.0671
.770	-.0591	-.0536	-.0515	-.0449
.950	-.0896	-.0678	-.0471	-.0515

BETA (8) = 1.970 ALPHA (5) = 6.200 Q(PSF) = 42.822 PO = 2113.7 RUN NO = 19.000

SECTION (1)MAIN LND GR DR-I DEPENDENT VARIABLE CP

Y/BML	.0760	.3100	.5820	.8530
X/CML				
.050	-.5344	.0246	-.4300	-.7667
.230	.0213	-.0286	.0322	-.0590
.410	.0148	.0355	.0289	-.0125
.590	-.0003	-.0003	.0279	-.0085
.770	-.0188	-.0101	.0072	.0268
.950	-.0525	-.0297	.0028	.0018

BETA (8) = 1.970 ALPHA (6) = 8.270 Q(PSF) = 42.822 PO = 2113.7 RUN NO = 19.000

SECTION (1)MAIN LND GR DR-I DEPENDENT VARIABLE CP

Y/BML	.0760	.3100	.5820	.8530
X/CML				
.050	-.4709	.0693	-.3348	-.6717
.230	.0660	.0388	.0693	-.0207
.410	.0617	.0889	.0769	.0339
.590	.0508	.0562	.0802	.0521
.770	.0225	.0377	.0595	.0954
.950	-.0167	.0072	.0530	.0584

OA163B MAIN GEAR DOOR INNER SURFACE (RFPF02)

BETA (9) = 2.990 ALPHA (1) = -2.060 Q(PSF) = 42.823 PO = 2120.5 RUN NO = 20.000

SECTION (1)MAIN LND GR DR-I DEPENDENT VARIABLE CP

Y/BML	.0760	.3100	.5920	.8530
X/CML				
.050	-.7487	-.1937	-.7998	-.6142
.230	-.2273	-.5597	-.7140	-.1963
.410	-.1394	-.1144	-.0905	-.1710
.590	-.1567	-.1665	-.1741	-.1902
.770	-.1687	-.1817	-.2045	-.2241
.950	-.1926	-.1904	-.2154	-.2165

BETA (9) = 2.990 ALPHA (2) = -.020 Q(PSF) = 42.823 PO = 2120.5 RUN NO = 20.000

SECTION (1)MAIN LND GR DR-I DEPENDENT VARIABLE CP

Y/BML	.0760	.3100	.5920	.8530
X/CML				
.050	-.6952	-.1280	-.7127	-.4891
.230	-.1411	-.4934	-.5654	-.1555
.410	-.1072	-.2316	-.0494	-.1423
.590	-.1225	-.1018	-.1247	-.1586
.770	-.1312	-.1345	-.1574	-.1683
.950	-.1552	-.1421	-.1487	-.1705

BETA (9) = 2.990 ALPHA (3) = 2.050 Q(PSF) = 42.823 PO = 2120.5 RUN NO = 20.000

SECTION (1)MAIN LND GR DR-I DEPENDENT VARIABLE CP

Y/BML	.0760	.3100	.5920	.8530
X/CML				
.050	-.6453	-.0711	-.6181	-.5705
.230	-.0700	-.1387	-.0243	-.1351
.410	-.0700	-.0537	-.0722	-.0946
.590	-.0809	-.0875	-.0722	-.1067
.770	-.0907	-.0875	-.0886	-.0951
.950	-.1191	-.0995	-.0820	-.0831

OA163B MAIN GEAR DOOR INNER SURFACE (RFPF02)

BETA (9) = 2.990 ALPHA (4) = 4.130 Q(PSF) = 42.823 PO = 2120.5 RUN NO = 20.000

SECTION (1)MAIN LND GR DR-I DEPENDENT VARIABLE CP

Y/BML	.0760	.3100	.5820	.8530
X/CML				
.050	-.5948	-.0189	-.5108	-.7576
.230	-.0156	-.0647	.0072	-.0987
.410	-.0276	-.0036	-.0123	-.0450
.590	-.0396	-.0396	-.0090	-.0551
.770	-.0538	-.0461	-.0363	-.0232
.950	-.0865	-.0658	-.0396	-.0450

BETA (9) = 2.990 ALPHA (5) = 6.190 Q(PSF) = 42.823 PO = 2120.5 RUN NO = 20.000

SECTION (1)MAIN LND GR DR-I DEPENDENT VARIABLE CP

Y/BML	.0760	.3100	.5620	.8530
X/CML				
.050	-.5301	.0246	-.4039	-.7092
.230	.0311	.0050	.0377	-.0580
.410	.0224	.0485	.0355	.0015
.590	.0105	.0126	.0387	.0066
.770	-.0156	-.0014	.0192	.0464
.950	-.0536	-.0286	.0213	.0137

BETA (9) = 2.990 ALPHA (6) = 8.260 Q(PSF) = 42.823 PO = 2120.5 RUN NO = 20.000

SECTION (1)MAIN LND GR DR-I DEPENDENT VARIABLE CP

Y/BML	.0760	.3100	.5820	.8530
X/CML				
.050	-.4649	.0801	-.3039	-.6172
.230	.0714	.0638	.0616	-.0338
.410	.0714	.0986	.0790	.0410
.590	.0594	.0703	.0801	.0632
.770	.0279	.0431	.0757	.1116
.950	-.0177	.0083	.0790	.0703

DATE 27 APR 77 OA163B PRESSURE DATA LISTING (RFPF02)

OA163B MAIN GEAR DOOR INNER SURFACE

BETA (10) = 4.060 ALPHA (1) = -2.050 Q(PSF) = 42.778 PO = 2120.6 RUN NO = 21.000

SECTION (1)MAIN LND GR DR-I DEPENDENT VARIABLE CP

Y/BML	.0760	.3100	.5820	.8530
X/CML				
.050	-.7399	-.1729	-.7716	-.4380
.230	-.1871	-.5476	-.0702	-.1862
.410	-.1347	-.1216	-.1565	-.1649
.590	-.1511	-.1358	-.1544	-.1862
.770	-.1598	-.1664	-.1937	-.2112
.950	-.1849	-.1762	-.1915	-.1675

BETA (10) = 4.060 ALPHA (2) = .000 Q(PSF) = 42.778 PO = 2120.6 RUN NO = 21.000

SECTION (1)MAIN LND GR DR-I DEPENDENT VARIABLE CP

Y/BML	.0760	.3100	.5820	.8530
X/CML				
.050	-.6896	-.0994	-.6874	-.4609
.230	-.1027	-.4980	-.3738	-.1593
.410	-.1016	-.1756	-.0559	-.1289
.590	-.1136	-.0831	-.1147	-.1441
.770	-.1223	-.1223	-.1397	-.1462
.950	-.1484	-.1310	-.1375	-.1266

BETA (10) = 4.060 ALPHA (3) = 2.070 Q(PSF) = 42.778 PO = 2120.6 RUN NO = 21.000

SECTION (1)MAIN LND GR DR-I DEPENDENT VARIABLE CP

Y/BML	.0760	.3100	.5820	.8530
X/CML				
.050	-.6435	-.0439	-.5857	-.6265
.230	-.0516	-.4473	-.1584	-.1260
.410	-.0614	-.0995	-.0189	-.0825
.590	-.0744	-.0755	-.0526	-.0966
.770	-.0843	-.0788	-.0875	-.0723
.950	-.1148	-.0952	-.0712	-.0668

OA163B MAIN GEAR DOOR INNER SURFACE (RFPF02)

BETA (10) = 4.060 ALPHA (4) = 4.110 Q(PSF) = 42.778 PO = 2120.6 RUN NO = 21.000

SECTION (1)MAIN LND GR DR-I DEPENDENT VARIABLE CP

Y/BML	.0760	.3100	.5820	.8530
X/CML				
.050	-.5842	-.4143	-.4807	-.7456
.230	-.0047	-.0330	.0105	-.0966
.410	-.0134	.0105	.0007	-.0338
.590	-.0276	-.0265	-.0025	-.0399
.770	-.0461	-.0385	-.0188	.0007
.950	-.0809	-.0591	-.0210	-.0265

BETA (10) = 4.060 ALPHA (5) = 6.190 Q(PSF) = 42.778 PO = 2120.6 RUN NO = 21.000

SECTION (1)MAIN LND GR DR-I DEPENDENT VARIABLE CP

Y/BML	.0760	.3100	.5820	.8530
X/CML				
.050	-.5212	-.3479	-.3708	-.7124
.230	.0366	.0279	.0334	-.0672
.410	.0334	.0595	.0443	.0147
.590	.0203	.0301	.0519	.0187
.770	-.0090	.0072	.0334	.0650
.950	-.0526	-.0254	.0334	.0268

BETA (10) = 4.060 ALPHA (6) = 8.260 Q(PSF) = 42.778 PO = 2120.6 RUN NO = 21.000

SECTION (1)MAIN LND GR DR-I DEPENDENT VARIABLE CP

Y/BML	.0760	.3100	.5820	.8530
X/CML				
.050	-.4603	-.2793	-.2728	-.5626
.230	.0802	.0791	.0541	-.0500
.410	.0802	.1053	.0813	.0542
.590	.0682	.0770	.0857	.0714
.770	.0301	.0497	.0835	.1260
.950	-.0210	.0094	.0857	.0857

OA163B MAIN GEAR DOOR INNER SURFACE (RFPF02)

BETA (11) = 5.030 ALPHA (1) = -2.070 Q(PSF) = 42.767 PO = 2120.6 RUN NO = 22.000

SECTION (1)MAIN LND GR DR-I DEPENDENT VARIABLE CP

Y/BML	.0760	.3100	.5820	.8530
X/CML				
.050	-.7344	-.1460	-.1591	-.2713
.230	-.1373	-.5604	-.0884	-.1692
.410	-.1319	-.1112	-.1460	-.1611
.590	-.1439	-.1526	-.1450	-.1763
.770	-.1504	-.1647	-.1754	-.1874
.950	-.1754	-.1634	-.1689	-.1569

BETA (11) = 5.030 ALPHA (2) = .000 Q(PSF) = 42.767 PO = 2120.6 RUN NO = 22.000

SECTION (1)MAIN LND GR DR-I DEPENDENT VARIABLE CP

Y/BML	.0760	.3100	.5820	.8530
X/CML				
.050	-.6889	-.0853	-.6573	-.4865
.230	-.0809	-.5070	-.0504	-.1644
.410	-.0918	-.1289	-.0537	-.1169
.590	-.1027	-.1082	-.0973	-.1331
.770	-.1104	-.1093	-.1278	-.1180
.950	-.1409	-.1224	-.1071	-.1006

BETA (11) = 5.030 ALPHA (3) = 2.070 Q(PSF) = 42.767 PO = 2120.6 RUN NO = 22.000

SECTION (1)MAIN LND GR DR-I DEPENDENT VARIABLE CP

Y/BML	.0760	.3100	.5820	.8530
X/CML				
.050	-.6406	-.0396	-.5511	-.7161
.230	-.0396	-.4486	-.0243	-.1261
.410	-.0505	-.0778	-.0210	-.0693
.590	-.0625	-.0363	-.0374	-.0815
.770	-.0767	-.0712	-.0690	-.0483
.950	-.1116	-.0658	-.0592	-.0647

OA163B MAIN GEAR DOOR INNER SURFACE (RFPF02)

BETA (11) = 5.030 ALPHA (4) = 4.120 Q(PSF) = 42.767 PO = 2120.6 RUN NO = 22.000

SECTION (1)MAIN LND GR DR-I DEPENDENT VARIABLE CP

Y/BML	.0760	.3100	.5820	.8530
X/CML				
.050	-.5860	.0062	-.4346	-.7577
.230	.0040	-.3929	-.4467	-.0993
.410	-.0036	-.0190	.0083	-.0228
.590	-.0168	.0226	.0138	-.0279
.770	-.0398	-.0299	-.0157	.0237
.950	-.0826	-.0343	-.0091	.0237

BETA (11) = 5.030 ALPHA (5) = 6.190 Q(PSF) = 42.767 PO = 2120.6 RUN NO = 22.000

SECTION (1)MAIN LND GR DR-I DEPENDENT VARIABLE CP

Y/BML	.0760	.3100	.5820	.8530
X/CML				
.050	-.5220	.0508	-.3368	-.6694
.230	.0420	-.3227	-.3488	-.0804
.410	.0431	.0464	.0170	.0238
.590	.0301	.0671	.0497	.0289
.770	-.0036	.0105	.0366	.0813
.950	-.0504	.0170	.0453	.0813

BETA (11) = 5.030 ALPHA (6) = 8.260 Q(PSF) = 42.767 PO = 2120.6 RUN NO = 22.000

SECTION (1)MAIN LND GR DR-I DEPENDENT VARIABLE CP

Y/BML	.0760	.3100	.5820	.8530
X/CML				
.050	-.4903	.0889	-.3596	-.3870
.230	.0921	-.3106	-.3531	-.0348
.410	.0943	.1052	.0529	.0541
.590	.0791	.1150	.0867	.0885
.770	.0333	.0507	.0823	.1400
.950	-.0199	.0551	.0910	.1302

OA163B MAIN GEAR DOOR INNER SURFACE (RFPF03) (27 APR 77)

REFERENCE DATA

SREF = 2690.0000 SQ.FT. XMRP = 1076.7000 IN. XO
LREF = 474.8100 INCHES YMRP = .0000 IN. YO
BREF = 936.6800 INCHES ZMRP = 375.0000 IN. ZO
SCALE = .0405

PARAMETRIC DATA

SPDBRK = 25.000 BDFLAP = .000
ELV-L = .000 ELV-R = .000
PHI-N = 30.800 THETAN = 5.000
PHI-ML = 40.000 THETML = 6.200
PHI-MR = 40.000 THETMR = 6.200

BETA (1) = -5.030 ALPHA (1) = -2.080 Q(PSF) = 42.820 PO = 2117.7 RUN NO = 23.000

SECTION (1)MAIN LND GR DR-I DEPENDENT VARIABLE CP

Y/BML	.0760	.3100	.5820	.8530
X/CML				
.050	-.7707	-.3348	-.3534	-.6303
.230	-.5332	-.6923	-.9636	-.2728
.410	-.2052	-.5506	-.2520	-.2799
.590	-.2193	-.1954	-.2869	-.3042
.770	-.2575	-.2684	-.3109	-.3436
.950	-.2804	-.2934	-.3229	-.3425

BETA (1) = -5.020 ALPHA (2) = -.010 Q(PSF) = 42.820 PO = 2117.7 RUN NO = 23.000

SECTION (1)MAIN LND GR DR-I DEPENDENT VARIABLE CP

Y/BML	.0760	.3100	.5820	.8530
X/CML				
.050	-.7580	-.2768	-.8102	-.7268
.230	-.4902	-.6372	-.9006	-.2240
.410	-.1821	-.4597	-.1887	-.2250
.590	-.1832	-.1560	-.2300	-.2594
.770	-.2072	-.2104	-.2692	-.2921
.950	-.2311	-.2442	-.2649	-.2953

BETA (1) = -5.030 ALPHA (3) = 2.060 Q(PSF) = 42.820 PO = 2117.7 RUN NO = 23.000

SECTION (1)MAIN LND GR DR-I DEPENDENT VARIABLE CP

Y/BML	.0760	.3100	.5820	.8530
X/CML				
.050	-.7212	-.2159	-.2421	-.7595
.230	-.4163	-.5535	-.7953	-.1725
.410	-.1473	-.3695	-.1288	-.1725
.590	-.1419	-.0962	-.1637	-.2079
.770	-.1582	-.1528	-.2051	-.2366
.950	-.1833	-.1855	-.2116	-.2345

OA163B MAIN GEAR DOOR INNER SURFACE (RFPF03)

BETA (1) = -5.030 ALPHA (4) = 4.110 Q(PSF) = 42.820 PO = 2117.7 RUN NO = 23.000

SECTION (1)MAIN LND GR DR-I DEPENDENT VARIABLE C_P

Y/BML	.0760	.3100	.5820	.8530
X/CML				
.050	-.6775	-.1636	-.1832	-.5569
.230	-.3269	-.4946	-.6960	-.1188
.410	-.0994	-.2888	-.0700	-.1218
.590	-.1016	-.0689	-.1146	-.1491
.770	-.1157	-.0983	-.1538	-.1778
.950	-.1353	-.1244	-.1604	-.1734

BETA (1) = -5.030 ALPHA (5) = 6.190 Q(PSF) = 42.820 PO = 2117.7 RUN NO = 23.000

SECTION (1)MAIN LND GR DR-I DEPENDENT VARIABLE C_P

Y/BML	.0760	.3100	.5820	.8530
X/CML				
.050	-.6121	-.0981	-.6088	-.7164
.230	-.2187	-.4306	-.6186	-.0923
.410	-.0438	-.2176	-.0297	-.0691
.590	-.0503	-.0286	-.0601	-.0953
.770	-.0666	-.0688	-.0873	-.0796
.950	-.0883	-.0742	-.0992	-.0796

BETA (1) = -5.030 ALPHA (6) = 8.260 Q(PSF) = 42.820 PO = 2117.7 RUN NO = 23.000

SECTION (1)MAIN LND GR DR-I DEPENDENT VARIABLE C_P

Y/BML	.0760	.3100	.5820	.8530
X/CML				
.050	-.5360	-.0123	-.5033	-.8745
.230	-.1182	-.3702	-.4913	-.0643
.410	.0050	-.1509	.0247	-.0308
.590	-.0058	.0094	.0094	-.0329
.770	-.0156	-.0091	-.0189	-.0014
.950	-.0363	-.0069	-.0167	-.0036

0A163B MAIN GEAR DOOR INNER SURFACE (RFPF03)

BETA (2) = -4.030 ALPHA (1) = -2.080 Q(PSF) = 42.867 PO = 2117.8 RUN NO = 24.000

SECTION (1)MAIN LND GR DR-I DEPENDENT VARIABLE CP

Y/BML	.0760	.3100	.5820	.8530
X/CML				
.050	-.3217	-.3173	-.3477	-.6886
.230	-.5160	-.6876	-.9536	-.2628
.410	-.2088	-.5204	-.2283	-.2668
.590	-.2088	-.1827	-.2696	-.2890
.770	-.2381	-.2403	-.2891	-.3315
.950	-.2631	-.2837	-.3054	-.3271

BETA (2) = -4.030 ALPHA (2) = .000 Q(PSF) = 42.837 PO = 2117.8 RUN NO = 24.000

SECTION (1)MAIN LND GR DR-I DEPENDENT VARIABLE CP

Y/BML	.0760	.3100	.5820	.8530
X/CML				
.050	-.7753	-.2630	-.3142	-.7581
.230	-.4636	-.6227	-.8549	-.2182
.410	-.1813	-.4189	-.1682	-.2152
.590	-.1758	-.1464	-.2140	-.2425
.770	-.1965	-.1943	-.2456	-.2837
.950	-.2205	-.2227	-.2597	-.2848

BETA (2) = -4.030 ALPHA (3) = 2.050 Q(PSF) = 42.837 PO = 2117.8 RUN NO = 24.000

SECTION (1)MAIN LND GR DR-I DEPENDENT VARIABLE CP

Y/BML	.0760	.3100	.5820	.8530
X/CML				
.050	-.7305	-.2092	-.2408	-.6173
.230	-.3757	-.5585	-.7751	-.1622
.410	-.1374	-.3583	-.1157	-.1612
.590	-.1353	-.1070	-.1548	-.1895
.770	-.1505	-.1418	-.1897	-.2277
.950	-.1733	-.1690	-.2038	-.2277

OA163B MAIN GEAR DOOR INNER SURFACE (RFPF03)

BETA (2) = -4.030 ALPHA (4) = 4.120 Q(PSF) = 42.857 PO = 2117.8 RUN NO = 24.000

SECTION (1)MAIN LND GR DR-I DEPENDENT VARIABLE CP

Y/BML	.0760	.3100	.5820	.8530
X/CML				
.050	-.6603	-.1493	-.6092	-.6916
.230	-.2776	-.4863	-.6831	-.1105
.410	-.0840	-.2645	-.0590	-.1004
.590	-.0895	-.0623	-.0949	-.1308
.770	-.1036	-.0862	-.1275	-.1580
.950	-.1254	-.1047	-.1493	-.1525

BETA (2) = -4.040 ALPHA (5) = 6.190 Q(PSF) = 42.857 PO = 2117.8 RUN NO = 24.000

SECTION (1)MAIN LND GR DR-I DEPENDENT VARIABLE CP

Y/BML	.0760	.3100	.5820	.8530
X/CML				
.050	-.5921	-.0656	-.0808	-.8203
.230	-.1678	-.4300	-.5747	-.1005
.410	-.0286	-.1809	-.0166	-.0702
.590	-.0384	-.0166	-.0406	-.0853
.770	-.0536	-.0449	-.0776	-.0634
.950	-.0786	-.0569	-.0819	-.0602

BETA (2) = -4.040 ALPHA (6) = 8.260 Q(PSF) = 42.857 PO = 2117.8 RUN NO = 24.000

SECTION (1)MAIN LND GR DR-I DEPENDENT VARIABLE CP

Y/BML	.0760	.3100	.5820	.8530
X/CML				
.050	-.5181	.0018	-.0286	-.9225
.230	-.0678	-.3582	-.4812	-.0499
.410	.0202	-.1145	.0257	-.0146
.590	.0061	.0257	.0224	-.0186
.770	-.0069	.0061	-.0090	.0115
.950	-.0330	-.0047	-.0069	.0115

OA163B MAIN GEAR DOOR INNER SURFACE (RFPF03)

BETA (3) = -2.960 ALPHA (1) = -2.060 Q(PSF) = 42.893 PO = 2117.8 RUN NO = 25.000

SECTION (1)MAIN LND GR DR-I DEPENDENT VARIABLE CP

Y/BML	.0760	.3100	.5820	.8530
X/CML				
.050	-.8179	-.3102	-.3428	-.7118
.230	-.5026	-.6690	-.9310	-.2528
.410	-.2102	-.4841	-.2069	-.2530
.590	-.2047	-.1786	-.2547	-.2692
.770	-.2276	-.2710	-.2754	-.3178
.950	-.2504	-.2700	-.3015	-.3156

BETA (3) = -2.960 ALPHA (2) = .010 Q(PSF) = 42.893 PO = 2117.8 RUN NO = 25.000

SECTION (1)MAIN LND GR DR-I DEPENDENT VARIABLE CP

Y/BML	.0760	.3100	.5820	.8530
X/CML				
.050	-.7790	-.2566	-.6274	-.7515
.230	-.4180	-.6067	-.8521	-.1960
.410	-.1705	-.3973	-.1541	-.2041
.590	-.1628	-.1323	-.1999	-.2264
.770	-.1825	-.1803	-.2239	-.2686
.950	-.2054	-.2108	-.2479	-.2730

BETA (3) = -2.960 ALPHA (3) = 2.050 Q(PSF) = 42.893 PO = 2117.8 RUN NO = 25.000

SECTION (1)MAIN LND GR DR-I DEPENDENT VARIABLE CP

Y/BML	.0760	.3100	.5820	.8530
X/CML				
.050	-.1709	-.1981	-.6283	-.6719
.230	-.3295	-.5436	-.7479	-.1499
.410	-.1209	-.3187	-.1014	-.1478
.590	-.1242	-.0916	-.1470	-.1701
.770	-.1394	-.1340	-.1774	-.2165
.950	-.1622	-.1470	-.1992	-.2144

OA163B MAIN GEAR DOOR INNER SURFACE (RFPF03)

BETA (3) = -2.960 ALPHA (4) = 4.120 Q(PSF) = 42.893 PO = 2117.8 RUN NO = 25.000

SECTION (1)MAIN LND GR DR-I DEPENDENT VARIABLE CP

Y/BML	.0760	.3100	.5820	.8530
X/CML				
.050	-.6345	-.1276	-.1287	-.7971
.230	-.2233	-.4811	-.6606	-.1258
.410	-.0688	-.2418	-.0525	-.1006
.590	-.0830	-.0526	-.0884	-.1197
.770	-.0950	-.0852	-.1200	-.1232
.950	-.1167	-.0982	-.1374	-.1265

BETA (3) = -2.960 ALPHA (5) = 6.200 Q(PSF) = 42.853 PO = 2117.8 RUN NO = 25.000

SECTION (1)MAIN LND GR DR-I DEPENDENT VARIABLE CP

Y/BML	.0760	.3100	.5820	.8530
X/CML				
.050	-.5743	-.0458	-.0686	-.9446
.230	-.1205	-.4108	-.5505	-.0950
.410	-.0187	-.1682	-.0112	-.0648
.590	-.0339	-.0220	-.0274	-.0739
.770	-.0480	-.0339	-.0621	-.0491
.950	-.0729	-.0426	-.0599	-.0436

BETA (3) = -2.960 ALPHA (6) = 8.280 Q(PSF) = 42.893 PO = 2117.8 RUN NO = 25.000

SECTION (1)MAIN LND GR DR-I DEPENDENT VARIABLE CP

Y/BML	.0760	.3100	.5820	.8530
X/CML				
.050	-.5072	.0192	-.0210	-.9103
.230	-.0253	-.3441	-.4648	-.0429
.410	.0300	-.0895	.0409	-.0044
.590	.0159	.0388	.0366	-.0034
.770	.0007	.0137	.0039	.0311
.950	-.0286	.0018	.0039	.0333

OA163B MAIN GEAR DOOR INNER SURFACE (RFPF03)

BETA (4) = -2.030 ALPHA (1) = -2.060 Q(PSF) = 42.872 PO = 2117.8 RUN NO = 26.000

SECTION (1)MAIN LND GR DR-I DEPENDENT VARIABLE CP

Y/BML	.0760	.3100	.5820	.8530
X/CML				
.050	-.8218	-.2868	-.3172	-.7327
.230	-.4605	-.6634	-.8946	-.2324
.410	-.2033	-.4507	-.1935	-.2415
.590	-.1967	-.1642	-.2391	-.2566
.770	-.2152	-.2109	-.2586	-.3009
.950	-.2391	-.2478	-.2933	-.2988

BETA (4) = -2.020 ALPHA (2) = .020 Q(PSF) = 42.872 PO = 2117.8 RUN NO = 26.000

SECTION (1)MAIN LND GR DR-I DEPENDENT VARIABLE CP

Y/BML	.0760	.3100	.5820	.8530
X/CML				
.050	-.2127	-.2367	-.2704	-.6938
.230	-.3859	-.5961	-.8215	-.1927
.410	-.1572	-.3641	-.1376	-.1907
.590	-.1582	-.1452	-.1887	-.2089
.770	-.1735	-.1691	-.2116	-.2541
.950	-.1985	-.1909	-.2388	-.2585

BETA (4) = -2.030 ALPHA (3) = 2.070 Q(PSF) = 42.872 PO = 2117.8 RUN NO = 26.000

SECTION (1)MAIN LND GR DR-I DEPENDENT VARIABLE CP

Y/BML	.0760	.3100	.5820	.8530
X/CML				
.050	-.7087	-.1793	-.1988	-.7747
.230	-.2824	-.5308	-.7196	-.1466
.410	-.1045	-.2846	-.0914	-.1345
.590	-.1164	-.0958	-.1348	-.1567
.770	-.1316	-.1272	-.1598	-.1945
.950	-.1555	-.1424	-.1826	-.1913

OA163B MAIN GEAR DOOR INNER SURFACE (RFPF03)

BETA (4) = -2.020 ALPHA (4) = 4.120 Q(PSF) = 42.872 PO = 2117.8 RUN NO = 26.000

SECTION (1)MAIN LND GR DR-I DEPENDENT VARIABLE CP

Y/BML	.0760	.3100	.5820	.8530
X/CML				
.050	-.1003	-.0927	-.4417	-.8885
.230	-.1721	-.4656	-.6287	-.1297
.410	-.0558	-.2090	-.0492	-.0994
.590	-.0710	-.0503	-.0742	-.1196
.770	-.0840	-.0732	-.1101	-.1069
.950	-.1090	-.0895	-.1134	-.1014

BETA (4) = -2.020 ALPHA (5) = 6.200 Q(PSF) = 42.872 PO = 2117.8 RUN NO = 26.000

SECTION (1)MAIN LND GR DR-I DEPENDENT VARIABLE CP

Y/BML	.0760	.3100	.5820	.8530
X/CML				
.050	-.0527	-.0276	-.0636	-.9841
.230	-.0745	-.4029	-.5339	-.0836
.410	-.0112	-.1378	-.0036	-.0531
.590	-.0265	-.0101	-.0112	-.0552
.770	-.0374	-.0298	-.0451	-.0298
.950	-.0669	-.0385	-.0429	-.0309

BETA (4) = -2.020 ALPHA (6) = 8.270 Q(PSF) = 42.872 PO = 2117.8 RUN NO = 26.000

SECTION (1)MAIN LND GR DR-I DEPENDENT VARIABLE CP

Y/BML	.0760	.3100	.5820	.8530
X/CML				
.050	-.0112	.0301	-.0014	-.8572
.230	.0137	-.3323	-.4302	-.0358
.410	.0366	-.0656	.0355	.0046
.590	.0224	.0453	.0475	.0106
.770	.0050	.0235	.0192	.0409
.950	-.0243	.0137	.0170	.0344

OA163B MAIN GEAR DOOR INNER SURFACE (RFPF03)

BETA (5) = -1.030 ALPHA (1) = -2.060 Q(PSF) = 42.972 PO = 2117.8 RUN NO = 27.000

SECTION (1)MAIN LND GR DR-I DEPENDENT VARIABLE CP

Y/BML	.0760	.3100	.5820	.8530
X/CML				
.050	-.2563	-.2769	-.3062	-.6980
.230	-.4190	-.6489	-.8745	-.2292
.410	-.1901	-.4103	-.1728	-.2282
.590	-.1901	-.1641	-.2238	-.2403
.770	-.2064	-.1977	-.2422	-.2845
.950	-.2303	-.2270	-.2791	-.2888

BETA (5) = -1.030 ALPHA (2) = .000 Q(PSF) = 42.872 PO = 2117.8 RUN NO = 27.000

SECTION (1)MAIN LND GR DR-I DEPENDENT VARIABLE CP

Y/BML	.0760	.3100	.5820	.8530
X/CML				
.050	-.7552	-.2190	-.2277	-.7769
.230	-.3267	-.5790	-.7694	-.1834
.410	-.1396	-.3375	-.1156	-.1814
.590	-.1483	-.1265	-.1657	-.2036
.770	-.1635	-.1537	-.1907	-.2298
.950	-.1863	-.1765	-.2222	-.2298

BETA (5) = -1.030 ALPHA (3) = 2.060 Q(PSF) = 42.872 PO = 2117.8 RUN NO = 27.000

SECTION (1)MAIN LND GR DR-I DEPENDENT VARIABLE CP

Y/BML	.0760	.3100	.5820	.8530
X/CML				
.050	-.6990	-.1514	-.1503	-.8628
.230	-.2307	-.5175	-.6990	-.1590
.410	-.0927	-.2665	-.0742	-.1307
.590	-.1079	-.0872	-.1144	-.1509
.770	-.1231	-.1220	-.1546	-.1655
.950	-.1448	-.1351	-.1655	-.1655

OA1638 MAIN GEAR DOOR INNER SURFACE (RFPF03)

BETA (5) = -1.030 ALPHA (4) = 4.120 Q(PSF) = 42.472 PO = 2117.8 RUN NO = 27.000

SECTION (1)MAIN LND GR DR-I DEPENDENT VARIABLE CP

Y/BML	.0760	.3100	.5820	.8530
X/CML				
.050	-.0940	-.0744	-.1005	-.9914
.230	-.1256	-.4567	-.6070	-.1198
.410	-.0482	-.1996	-.0374	-.0864
.590	-.0646	-.0461	-.0580	-.1057
.770	-.0766	-.0711	-.0983	-.0951
.950	-.1015	-.0777	-.0962	-.0940

BETA (5) = -1.030 ALPHA (5) = 6.190 Q(PSF) = 42.872 PO = 2117.8 RUN NO = 27.000

SECTION (1)MAIN LND GR DR-I DEPENDENT VARIABLE CP

Y/BML	.0760	.3100	.5820	.8530
X/CML				
.050	-.5647	-.0145	-.0505	-.9551
.230	-.0374	-.3878	-.5199	-.0745
.410	-.0058	-.1193	-.0025	-.0410
.590	-.0211	.0029	.0018	-.0410
.770	-.0342	-.0200	-.0309	-.0145
.950	-.0669	-.0331	-.0342	-.0189

BETA (5) = -1.030 ALPHA (6) = 8.280 Q(PSF) = 42.872 PO = 2117.8 RUN NO = 27.000

SECTION (1)MAIN LND GR DR-I DEPENDENT VARIABLE CP

Y/BML	.0760	.3100	.5820	.8530
X/CML				
.050	-.4859	.0452	.0094	-.8232
.230	.0365	-.3186	-.4033	-.0256
.410	.0430	-.0286	.0343	.0116
.590	.0267	.0593	.0615	.0207
.770	.0104	.0267	.0256	.0539
.950	-.0231	.0137	.0322	.0550

OA163B MAIN GEAR DOOR INNER SURFACE (RFPF03)

BETA (6) = .030 ALPHA (1) = .000 Q(PSF) = 42.985 PO = 2117.8 RUN NO = 28.000

SECTION (1)MAIN LND GR DR-I DEPENDENT VARIABLE CP

Y/BML	.0760	.3100	.5820	.8530
X/CML				
.050	-.1852	-.2100	-.2209	-.8424
.230	-.2792	-.5733	-.7646	-.1883
.410	-.1290	-.3214	-.1095	-.1802
.590	-.1441	-.1246	-.1603	-.1762
.770	-.1560	-.1549	-.1873	-.2155
.950	-.1809	-.1690	-.2133	-.2165

BETA (6) = .030 ALPHA (2) = 2.070 Q(PSF) = 42.985 PO = 2117.8 RUN NO = 28.000

SECTION (1)MAIN LND GR DR-I DEPENDENT VARIABLE CP

Y/BML	.0760	.3100	.5820	.8530
X/CML				
.050	-.1324	-.1238	-.1314	-.9183
.230	-.1736	-.5071	-.6815	-.1564
.410	-.0837	-.2364	-.0707	-.1242
.590	-.1000	-.0783	-.0989	-.1504
.770	-.1129	-.1097	-.1454	-.1508
.950	-.1400	-.1173	-.1465	-.1454

BETA (6) = .030 ALPHA (3) = 4.130 Q(PSF) = 42.985 PO = 2117.8 RUN NO = 28.000

SECTION (1)MAIN LND GR DR-I DEPENDENT VARIABLE CP

Y/BML	.0760	.3100	.5820	.8530
X/CML				
.050	-.0851	-.0579	-.0938	-.9920
.230	-.0807	-.4523	-.5837	-.1135
.410	-.0427	-.1644	-.0286	-.0812
.590	-.0601	-.0405	-.0449	-.0852
.770	-.0720	-.0633	-.0818	-.0731
.950	-.0981	-.0699	-.0818	-.0699

OA163B MAIN GEAR DOOR INNER SURFACE (RFPF03)

BETA (6) = .030 ALPHA (4) = 6.210 Q(PSF) = 42.985 PO = 2117.8 RUN NO = 28.000

SECTION (1)MAIN LND GR DR-I DEPENDENT VARIABLE CP

Y/BML	.0760	.3100	.5820	.8530
X/CML				
.050	-.0406	-.0014	-.0406	-.9040
.230	-.0646	-.3759	-.4750	-.0662
.410	.0039	-.0809	.0028	-.0277
.590	-.0145	.0148	.0148	-.0247
.770	-.0297	-.0145	-.0156	-.0025
.950	-.0602	-.0286	-.0145	-.0025

BETA (7) = .960 ALPHA (1) = .000 Q(PSF) = 42.767 PO = 2117.2 RUN NO = 29.000

SECTION (1)MAIN LND GR DR-I DEPENDENT VARIABLE CP

Y/BML	.0760	.3100	.5820	.8530
X/CML				
.050	-.5985	-.1360	-.1273	-.8973
.230	-.1740	-.5160	-.7081	-.1800
.410	-.0687	-.2467	-.0459	-.1497
.590	-.0861	-.0665	-.0937	-.1689
.770	-.1002	-.0959	-.1262	-.1490
.950	-.1273	-.1165	-.1425	-.1512

BETA (7) = .960 ALPHA (2) = 2.070 Q(PSF) = 42.767 PO = 2117.2 RUN NO = 29.000

SECTION (1)MAIN LND GR DR-I DEPENDENT VARIABLE CP

Y/BML	.0760	.3100	.5820	.8530
X/CML				
.050	-.6886	-.1065	-.1240	-.9685
.230	-.1338	-.5047	-.6645	-.1418
.410	-.0824	-.2203	-.0572	-.1204
.590	-.0988	-.0813	-.0966	-.1367
.770	-.1097	-.1021	-.1316	-.1404
.950	-.1371	-.1119	-.1294	-.1393

DATE 27 APR 77 OA163B PRESSURE DATA LISTING

OA163B MAIN GEAR DOOR INNER SURFACE (RFPF03)

BETA (7) = .960 ALPHA (3) = 4.130 Q(PSF) = 42.767 PO = 2117.2 RUN NO = 29.000

SECTION (1)MAIN LND GR DR-I DEPENDENT VARIABLE CP

Y/BML	.0760	.3100	.5820	.8530
X/CML				
.050	-.0819	-.0427	-.0830	-.9548
.230	-.0558	-.4507	-.5540	-.1045
.410	-.0384	-.1483	-.0253	-.0702
.590	-.0536	-.0319	-.0340	-.0722
.770	-.0667	-.0580	-.0655	-.0591
.950	-.0982	-.0591	-.0645	-.0623

BETA (7) = .960 ALPHA (4) = 6.200 Q(PSF) = 42.767 PO = 2117.2 RUN NO = 29.000

SECTION (1)MAIN LND GR DR-I DEPENDENT VARIABLE CP

Y/BML	.0760	.3100	.5820	.8530
X/CML				
.050	-.0386	.0050	-.0342	-.8939
.230	.0072	-.3908	-.4586	-.0614
.410	.0094	-.0616	.0083	-.0228
.590	-.0058	.0225	.0269	-.0167
.770	-.0255	-.0035	-.0080	.0127
.950	-.0594	-.0156	-.0047	.0139

BETA (8) = 1.950 ALPHA (1) = .000 Q(PSF) = 42.910 PO = 2117.1 RUN NO = 30.000

SECTION (1)MAIN LND GR DR-I DEPENDENT VARIABLE CP

Y/BML	.0760	.3100	.5820	.8530
X/CML				
.050	-.7258	-.1573	-.1606	-.9031
.230	-.1779	-.5504	-.7323	-.1675
.410	-.1129	-.2710	-.0848	-.1423
.590	-.1313	-.1010	-.1292	-.1644
.770	-.1422	-.1389	-.1747	-.1920
.950	-.1682	-.1476	-.1801	-.1920

OA163B MAIN GEAR DOOR INNER SURFACE (RFPF03)

BETA (8) = 1.940 ALPHA (2) = 2.060 Q(PSF) = 42.910 PO = 2117.1 RUN NO = 30.000

SECTION (1)MAIN LND GR DR-I DEPENDENT VARIABLE CP

Y/BML	.0760	.3100	.5820	.8530
X/CML				
.050	-.6730	-.0852	-.1233	-.9251
.230	-.0983	-.4945	-.6382	-.1420
.410	-.0765	-.1952	-.0471	-.1087
.590	-.0896	-.0678	-.0765	-.1147
.770	-.1016	-.0994	-.1168	-.1212
.950	-.1299	-.1026	-.1081	-.1277

BETA (8) = 1.940 ALPHA (3) = 4.140 Q(PSF) = 42.910 PO = 2117.1 RUN NO = 30.000

SECTION (1)MAIN LND GR DR-I DEPENDENT VARIABLE CP

Y/BML	.0760	.3100	.5820	.8530
X/CML				
.050	-.6072	-.0386	-.0747	-.9547
.230	-.0320	-.4377	-.5263	-.1020
.410	-.0331	-.1151	-.0222	-.0553
.590	-.0462	-.0145	-.0178	-.0604
.770	-.0605	-.0517	-.0528	-.0419
.950	-.0944	-.0561	-.0452	-.0364

BETA (8) = 1.940 ALPHA (4) = 6.200 Q(PSF) = 42.910 PO = 2117.1 RUN NO = 30.000

SECTION (1)MAIN LND GR DR-I DEPENDENT VARIABLE CP

Y/BML	.0760	.3100	.5820	.8530
X/CML				
.050	-.0350	.0126	-.0198	-.8352
.230	.0201	-.3769	-.4256	-.0567
.410	.0158	-.0328	.0147	-.0135
.590	.0017	.0375	.0331	-.0024
.770	-.0209	.0072	.0061	.0331
.950	-.0598	-.0025	.0072	.0353

OA163B MAIN GEAR DOOR INNER SURFACE (RFPF03)

BETA (9) = 5.000 ALPHA (1) = .000 Q(PSF) = 42.885 PO = 2117.2 RUN NO = 31.000

SECTION (1)MAIN LND GR DR-I DEPENDENT VARIABLE CP

Y/BML	.0760	.3100	.5820	.8530
X/CML				
.050	-.1332	-.0943	-.1234	-.6920
.230	-.0856	-.5393	-.6645	-.1570
.410	-.0964	-.1375	-.0640	-.1138
.590	-.1083	-.0716	-.0964	-.1279
.770	-.1191	-.1083	-.1224	-.1170
.950	-.1526	-.1191	-.1105	-.1159

BETA (9) = 5.000 ALPHA (2) = 2.080 Q(PSF) = 42.885 PO = 2117.2 RUN NO = 31.000

SECTION (1)MAIN LND GR DR-I DEPENDENT VARIABLE CP

Y/BML	.0760	.3100	.5820	.8530
X/CML				
.050	-.6405	-.0471	-.0907	-.8817
.230	-.0384	-.4783	-.5479	-.1309
.410	-.0493	-.0744	-.0373	-.0662
.590	-.0646	-.0254	-.0362	-.0783
.770	-.0820	-.0624	-.0613	-.0406
.950	-.1201	-.0722	-.0526	-.0395

BETA (9) = 4.990 ALPHA (3) = 4.130 Q(PSF) = 42.885 PO = 2117.2 RUN NO = 31.000

SECTION (1)MAIN LND GR DR-I DEPENDENT VARIABLE CP

Y/BML	.0760	.3100	.5820	.8530
X/CML				
.050	-.5846	-.0069	-.0428	-.8636
.230	.0028	-.4102	-.4255	-.0987
.410	-.0014	-.0123	-.0058	-.0267
.590	-.0145	.0246	.0072	-.0197
.770	-.0396	-.0069	-.0080	.0290
.950	-.0864	-.0298	-.0003	.0214

OA163B MAIN GEAR DOOR INNER SURFACE (RFPF03)

BETA (9) = 4.990 ALPHA (4) = 6.220 Q(PSF) = 42 885 PO = 2117.2 RUN NO = 31.000

SECTION (1)MAIN LND GR DR-I DEPENDENT VARIABLE CP

Y/BML	.0760	.3100	.5820	.8530
X/CML				
.050	-.5204	.0443	-.2729	-.6480
.230	.0454	-.3383	-.3329	-.0754
.410	.0432	.0465	.0094	.0025
.590	.0323	.0672	.0465	.0370
.770	-.0047	.0454	.0345	.0944
.950	-.0603	.0116	.0497	.0901

OA163B MAIN GEAR DOOR INNER SURFACE (RFPF04) (27 APR 77)

REFERENCE DATA

SREF =	2690.0000 SQ.FT.	XMRP =	1076.7000 IN.	XO	
LREF =	474.8100 INCHES	YMRP =	.0000 IN.	YO	
BREF =	936.6800 INCHES	ZMRP =	375.0000 IN.	ZO	
SCALE =	.0405				

PARAMETRIC DATA

SPDBRK =	25.000	BDFLAP =	.000
ELV-L =	.000	ELV-R =	.000
PHI-N =	25.000	THETAN =	5.000
PHI-ML =	26.000	THETML =	4.000
PHI-MR =	26.000	THETMR =	4.000

BETA (1) = -5.030 ALPHA (1) = .000 Q(PSF) = 42.797 PO = 2115.0 RUN NO = 32.000

SECTION (1)MAIN LND GR DR-I DEPENDENT VARIABLE CP

Y/BML	.0760	.3100	.5820	.8530
X/CML				
.050	-.2568	-.2655	-.2807	-.1499
.230	-.6405	-.6622	-.9535	-.2297
.410	-.4046	-.3666	-.2394	-.2236
.590	-.1905	-.1829	-.2536	-.2448
.770	-.2199	-.2579	-.2623	-.2796
.950	-.2318	-.2546	-.2568	-.2786

BETA (1) = -5.030 ALPHA (2) = 2.070 Q(PSF) = 42.797 PO = 2115.0 RUN NO = 32.000

SECTION (1)MAIN LND GR DR-I DEPENDENT VARIABLE CP

Y/BML	.0760	.3100	.5820	.8530
X/CML				
.050	-.1202	-.1355	-.1464	-.1088
.230	-.2673	-.5180	-.7632	-.1756
.410	-.0308	-.2444	-.1028	-.1726
.590	-.0712	-.0603	-.1202	-.1898
.770	-.0930	-.1235	-.1322	-.1474
.950	-.1071	-.1235	-.1300	-.1464

BETA (1) = -5.030 ALPHA (3) = 4.130 Q(PSF) = 42.797 PO = 2115.0 RUN NO = 32.000

SECTION (1)MAIN LND GR DR-I DEPENDENT VARIABLE CP

Y/BML	.0760	.3100	.5820	.8530
X/CML				
.050	-.1378	-.1575	-.1662	-.1059
.230	-.3026	-.5132	-.7655	-.1231
.410	-.0745	-.2819	-.1138	-.1231
.590	-.0996	-.0756	-.1411	-.1404
.770	-.1193	-.1378	-.1520	-.1618
.950	-.1335	-.1389	-.1520	-.1564

DATE 27 APR 77 CA163B PRESSURE DATA LISTING

OA163B MAIN GEAR DOOR INNER SURFACE (RFPF04)

BETA (1) = -5.030 ALPHA (4) = 6.210 Q(PSF) = 42 797 PO = 2115.0 RUN NO = 32.000

SECTION (1)MAIN LND GR DR-I DEPENDENT VARIABLE CP

Y/BML	.0760	.3100	.5820	.8530
X/CML				
.050	-.0810	-.0832	-.0832	-.1109
.230	-.2402	-.4452	-.6436	-.0906
.410	-.0363	-.1998	-.0439	-.0764
.590	-.0537	-.0167	-.0919	-.0946
.770	-.0679	-.0865	-.1028	-.0810
.950	-.0799	-.0908	-.0952	-.0821

BETA (2) = -2.000 ALPHA (1) = .000 Q(PSF) = 42 802 PO = 2115.0 RUN NO = 33.000

SECTION (1)MAIN LND GR DR-I DEPENDENT VARIABLE CP

Y/BML	.0760	.3100	.5820	.8530
X/CML				
.050	-.2219	-.2372	-.2534	-.1367
.230	-.3762	-.6217	-.8673	-.1862
.410	-.1448	-.3610	-.1904	-.1892
.590	-.1676	-.1448	-.2187	-.2033
.770	-.1839	-.2187	-.2230	-.2328
.950	-.1980	-.2176	-.2274	-.2393

BETA (2) = -2.010 ALPHA (2) = 2.050 Q(PSF) = 42 802 PO = 2115.0 RUN NO = 33.000

SECTION (1)MAIN LND GR DR-I DEPENDENT VARIABLE CP

Y/BML	.0760	.3100	.5820	.8530
X/CML				
.050	-.1613	-.1766	-.1929	-.1409
.230	-.5889	-.5432	-.7749	-.1409
.410	-.3278	-.2941	-.1276	-.1399
.590	-.1265	-.0863	-.1581	-.1531
.770	-.1374	-.1581	-.1722	-.1962
.950	-.1526	-.1711	-.1755	-.1983

DATE 27 APR 77 OA163B PRESSURE DATA LISTING (RFPF04)

OA163B MAIN GEAR DOOR INNER SURFACE

BETA (2) = -2.010 ALPHA (3) = 4.120 Q(PSF) = 42 802 PO = 2115.0 RUN NO = 33.000

SECTION (1)MAIN LND GR DR-I DEPENDENT VARIABLE CP

Y/BML	.0760	.3100	.5820	.8530
X/CML				
.050	-.5691	-.0887	-.1062	-.1343
.230	-.2088	-.4708	-.6772	-.1171
.410	-.0625	-.2372	-.0625	-.1029
.590	-.0833	-.0429	-.1117	-.1181
.770	-.0898	-.0997	-.1324	-.1084
.950	-.1040	-.1051	-.1193	-.1084

BETA (2) = -2.010 ALPHA (4) = 6.220 Q(PSF) = 42 802 PO = 2115.0 RUN NO = 33.000

SECTION (1)MAIN LND GR DR-I DEPENDENT VARIABLE CP

Y/BML	.0760	.3100	.5820	.8530
X/CML				
.050	-.0505	-.0342	-.0353	-.1546
.230	-.1182	-.3998	-.5701	-.0734
.410	-.0243	-.1488	.0039	-.0603
.590	-.0418	-.0080	-.0593	-.0613
.770	-.0473	-.0560	-.0724	-.0353
.950	-.0625	-.0560	-.0582	-.0353

BETA (3) = -1.010 ALPHA (1) = .020 Q(PSF) = 42.885 PO = 2115.0 RUN NO = 34.000

SECTION (1)MAIN LND GR DR-I DEPENDENT VARIABLE CP

Y/BML	.0760	.3100	.5820	.8530
X/CML				
.050	-.2054	-.2217	-.2456	-.1486
.230	-.6362	-.6026	-.8326	-.1809
.410	-.3584	-.3476	-.1685	-.1789
.590	-.1609	-.1305	-.2022	-.1910
.770	-.1729	-.1956	-.2097	-.2228
.950	-.1880	-.2032	-.2206	-.2217

OA163B MAIN GEAR DOOR INNER SURFACE (RFPF04)

BETA (3) = -1.010 ALPHA (2) = 2.060 Q(PSF) = 42.885 PO = 2115.0 RUN NO = 34.000

SECTION (1)MAIN LND GR DR-I DEPENDENT VARIABLE CP

Y/BML	.0760	.3100	.5820	.8530
X/CML				
.050	-.6260	-.1595	-.1693	-.1686
.230	-.2728	-.5366	-.7361	-.1453
.410	-.1028	-.2881	-.1093	-.1311
.590	-.1181	-.0853	-.1497	-.1443
.770	-.1290	-.1464	-.1660	-.1769
.950	-.1442	-.1431	-.1704	-.1802

BETA (3) = -1.010 ALPHA (3) = 4.130 Q(PSF) = 42.885 PO = 2115.0 RUN NO = 34.000

SECTION (1)MAIN LND GR DR-I DEPENDENT VARIABLE CP

Y/BML	.0760	.3100	.5820	.8530
X/CML				
.050	-.0863	-.0798	-.0863	-.1410
.230	-.1723	-.4629	-.6512	-.1097
.410	-.0613	-.1984	-.0439	-.0945
.590	-.0798	-.0373	-.1015	-.1117
.770	-.0863	-.0852	-.1200	-.0961
.950	-.1015	-.0950	-.1092	-.0983

BETA (3) = -1.010 ALPHA (4) = 6.200 Q(PSF) = 42.885 PO = 2115.0 RUN NO = 34.000

SECTION (1)MAIN LND GR DR-I DEPENDENT VARIABLE CP

Y/BML	.0760	.3100	.5820	.8530
X/CML				
.050	-.0340	-.0166	-.0253	-.1578
.230	-.0839	-.3868	-.5399	-.0609
.410	-.0188	-.1197	.0256	-.0519
.590	-.0361	.0007	-.0470	-.0539
.770	-.0427	-.0394	-.0589	-.0285
.950	-.0557	-.0427	-.0524	-.0275

OA163B MAIN GEAR DOOR INNER SURFACE (RFPF04)

BETA (4) = .010 ALPHA (1) = .000 Q(PSF) = 42.850 PO = 2115.0 RUN NO = 35.000

SECTION (1)MAIN LND GR DR-I DEPENDENT VARIABLE CP

Y/BML	.0760	.3100	.5820	.8530
X/CML				
.050	-.1870	-.2044	-.2250	-.1557
.230	-.6374	-.5766	-.8024	-.1789
.410	-.3292	-.3227	-.1512	-.1648
.590	-.1534	-.1121	-.1892	-.1759
.770	-.1653	-.1870	-.2011	-.2141
.950	-.1805	-.1892	-.2055	-.2098

BETA (4) = .010 ALPHA (2) = 2.070 Q(PSF) = 42.850 PO = 2115.0 RUN NO = 35.000

SECTION (1)MAIN LND GR DR-I DEPENDENT VARIABLE CP

Y/BML	.0760	.3100	.5820	.8530
X/CML				
.050	-.6287	-.1288	-.1465	-.1603
.230	-.2203	-.5209	-.7257	-.1502
.410	-.0973	-.2454	-.0973	-.1269
.590	-.1169	-.0744	-.1430	-.1462
.770	-.1256	-.1332	-.1670	-.1550
.950	-.1397	-.1354	-.1550	-.1572

BETA (4) = .010 ALPHA (3) = 4.130 Q(PSF) = 42.850 PO = 2115.0 RUN NO = 35.000

SECTION (1)MAIN LND GR DR-I DEPENDENT VARIABLE CP

Y/BML	.0760	.3100	.5820	.8530
X/CML				
.050	-.0722	-.0570	-.0679	-.1523
.230	-.1245	-.4372	-.6148	-.1037
.410	-.0515	-.1692	-.0276	-.0824
.590	-.0722	-.0330	-.0875	-.1017
.770	-.0788	-.0820	-.1049	-.0831
.950	-.0940	-.0853	-.0940	-.0809

OA163B MAIN GEAR DOOR INNER SURFACE (RFPF04)

BETA (4) = .010 ALPHA (4) = 6.200 Q(PSF) = 42.850 PO = 2115.0 RUN NO = 35.000

SECTION (1)MAIN LND GR DR-I DEPENDENT VARIABLE CP

Y/BML	.0760	.3100	.5820	.8530
X/CML				
.050	-.0265	-.0069	-.3412	-.1634
.230	-.0504	-.3640	-.5132	-.0561
.410	-.0123	-.1005	.0420	-.0378
.590	-.0297	.0083	-.0308	-.0409
.770	-.0352	-.0341	-.0482	-.0156
.950	-.0537	-.0330	-.0384	-.0090

BETA (5) = 1.000 ALPHA (1) = .000 Q(PSF) = 42.797 PO = 2115.0 RUN NO = 36.000

SECTION (1)MAIN LND GR DR-I DEPENDENT VARIABLE CP

Y/BML	.0760	.3100	.5820	.8530
X/CML				
.050	-.1699	-.1852	-.1928	-.1722
.230	-.2667	-.5668	-.7962	-.1823
.410	-.1254	-.3102	-.1373	-.1520
.590	-.1471	-.1047	-.1754	-.1661
.770	-.1580	-.1710	-.1960	-.1993
.950	-.1721	-.1710	-.1971	-.1993

BETA (5) = 1.000 ALPHA (2) = 2.050 Q(PSF) = 42.797 PO = 2115.0 RUN NO = 36.000

SECTION (1)MAIN LND GR DR-I DEPENDENT VARIABLE CP

Y/BML	.0760	.3100	.5820	.8530
X/CML				
.050	-.1136	-.1006	-.4960	-.1634
.230	-.1725	-.4971	-.7096	-.1432
.410	-.0886	-.2237	-.0809	-.1168
.590	-.1071	-.0657	-.1278	-.1381
.770	-.1125	-.1213	-.1507	-.1365
.950	-.1278	-.1245	-.1387	-.1420

OA163B MAIN GEAR DOOR INNER SURFACE (RFPF04)

BETA (5) = 1.010 ALPHA (3) = 4.140 Q(PSF) = 42.797 PO = 2115.0 RUN NO = 36.000

SECTION (1)MAIN LND GR DR-I DEPENDENT VARIABLE CP

Y/BML	.0760	.3100	.5820	.8530
X/CML				
.050	-.0647	-.0418	-.0483	-.1605
.230	-.0919	-.4201	-.5891	-.0977
.410	-.0494	-.1443	-.0069	-.0724
.590	-.0668	-.0276	-.0788	-.0865
.770	-.0712	-.0745	-.0930	-.0690
.950	-.0908	-.0668	-.0832	-.0745

BETA (5) = 1.000 ALPHA (4) = 6.190 Q(PSF) = 42.797 PO = 2115.0 RUN NO = 36.000

SECTION (1)MAIN LND GR DR-I DEPENDENT VARIABLE CP

Y/BML	.0760	.3100	.5820	.8530
X/CML				
.050	-.0189	.0083	.0149	-.1282
.230	-.0178	-.3659	-.4893	-.0511
.410	-.0069	-.0658	.0574	-.0247
.590	-.0189	.0116	-.0232	-.0247
.770	-.0287	-.0243	-.0363	-.0036
.950	-.0483	-.0178	-.0211	.0007

BETA (6) = 1.990 ALPHA (1) = .020 Q(PSF) = 42.885 PO = 2115.0 RUN NO = 37.000

SECTION (1)MAIN LND GR DR-I DEPENDENT VARIABLE CP

Y/BML	.0760	.3100	.5820	.8530
X/CML				
.050	-.1546	-.1622	-.1774	-.2064
.230	-.2187	-.5577	-.7761	-.1781
.410	-.1198	-.2535	-.1275	-.1458
.590	-.1405	-.0955	-.1633	-.1610
.770	-.1492	-.1633	-.1861	-.1850
.950	-.1655	-.1568	-.1850	-.1850

OA163B MAIN GEAR DOOR INNER SURFACE (RFPF04)

BETA (6) = 1.980 ALPHA (2) = 2.050 Q(PSF) = 42.885 PO = 2115.0 RUN NO = 37.000

SECTION (1)MAIN LND GR DR-I DEPENDENT VARIABLE CP

Y/BML	.0760	.3100	.5820	.8530
X/CML				
.050	-.6101	-.0873	-.0971	-.1762
.230	-.1308	-.4829	-.6579	-.1348
.410	-.0840	-.1829	-.0612	-.1095
.590	-.1014	-.0612	-.1188	-.1287
.770	-.1058	-.1112	-.1373	-.1297
.950	-.1231	-.1079	-.1275	-.1286

BETA (6) = 1.990 ALPHA (3) = 4.130 Q(PSF) = 42.885 PO = 2115.0 RUN NO = 37.000

SECTION (1)MAIN LND GR DR-I DEPENDENT VARIABLE CP

Y/BML	.0760	.3100	.5820	.8530
X/CML				
.050	-.0535	-.0285	-.0285	-.1658
.230	-.0589	-.4138	-.5570	-.0972
.410	-.0437	-.1034	.0007	-.0599
.590	-.0611	-.0264	-.0687	-.0750
.770	-.0643	-.0622	-.0785	-.0589
.950	-.0839	-.0622	-.0654	-.0611

BETA (6) = 1.990 ALPHA (4) = 6.180 Q(PSF) = 42.885 PO = 2115.0 RUN NO = 37.000

SECTION (1)MAIN LND GR DR-I DEPENDENT VARIABLE CP

Y/BML	.0760	.3100	.5820	.8530
X/CML				
.050	-.0090	.0301	-.3689	-.1463
.230	.0138	-.3405	-.4779	-.0409
.410	.0028	-.0287	.0606	-.0126
.590	-.0123	.0225	-.0090	-.0156
.770	-.0200	-.0156	-.0210	.0083
.950	-.0428	-.0112	-.0080	.0105

OA163B MAIN GEAR DOOR INNER SURFACE (RFPF04)

BETA (7) = 5.010 ALPHA (1) = .000 Q(PSF) = 42.840 PO = 2115.0 RUN NO = 38.000

SECTION (1)MAIN LND GR DR-I DEPENDENT VARIABLE CP

Y/BML	.0760	.3100	.5820	.8530
X/CML				
.050	-.1078	-.0948	-.1013	-.2869
.230	-.0915	-.5398	-.6668	-.1416
.410	-.1056	-.1056	-.0980	-.1194
.590	-.1154	-.0915	-.1262	-.1346
.770	-.1154	-.1230	-.1436	-.1436
.950	-.1338	-.1154	-.1295	-.1425

BETA (7) = 5.010 ALPHA (2) = 2.050 Q(PSF) = 42.840 PO = 2115.0 RUN NO = 38.000

SECTION (1)MAIN LND GR DR-I DEPENDENT VARIABLE CP

Y/BML	.0760	.3100	.5820	.8530
X/CML				
.050	-.0645	-.0362	-.0330	-.2531
.230	-.0460	-.4550	-.5942	-.1247
.410	-.0634	-.0667	-.0286	-.0712
.590	-.0754	-.0514	-.0775	-.0883
.770	-.0775	-.0808	-.0928	-.0765
.950	-.0993	-.0688	-.0743	-.0786

BETA (7) = 5.010 ALPHA (3) = 4.110 Q(PSF) = 42.840 PO = 2115.0 RUN NO = 38.000

SECTION (1)MAIN LND GR DR-I DEPENDENT VARIABLE CP

Y/BML	.0760	.3100	.5820	.8530
X/CML				
.050	-.0330	.0159	.0203	-.2221
.230	-.0036	-.3761	-.4851	-.0834
.410	-.0188	-.0243	.0377	-.0287
.590	-.0330	.0028	-.0254	-.0318
.770	-.0417	-.0352	-.0406	-.0123
.950	-.0700	-.0330	-.0221	-.0134

OA163B MAIN GEAR DOOR INNER SURFACE (RFPF04)

BETA (7) = 5.010 ALPHA (4) = 6.200 Q(PSF) = 42.840 PO = 2115.0 RUN NO = 38.000

SECTION (1)MAIN LND GR DR-I DEPENDENT VARIABLE CP

Y/BML	.0760	.3100	.5820	.8530
X/CML				
.050	-.0069	.0651	.0836	-.2743
.230	.0312	-.3638	-.3562	-.0400
.410	.0258	.0312	.0847	.0107
.590	.0138	.0454	.0290	.0167
.770	-.0047	.0105	.0105	.0443
.950	-.0407	.0007	.0258	.0509

OA163B MAIN GEAR DOOR INNER SURFACE (RFPF05) (27 APR 77)

REFERENCE DATA

SREF = 2690.0000 SQ.FT. XMRP = 1076.7000 IN. XO
LREF = 474.8100 INCHES YMRP = .0000 IN. YO
BREF = 936.6800 INCHES ZMRP = 375.0000 IN. ZO
SCALE = .0405

PARAMETRIC DATA

SPDBRK =	25.000	BDFLAP =	.000
ELV-L =	5.000	ELV-R =	5.000
PHI-N =	30.800	THETAN =	5.000
PHI-ML =	32.200	THETML =	5.000
PHI-MR =	32.200	THETMR =	5.000

BETA (1) = -5.050 ALPHA (1) = .050 Q(PSF) = 42.827 PO = 2115.0 RUN NO = 39.000

SECTION (1)MAIN LND GR DR-I DEPENDENT VARIABLE CP

Y/BML	.0760	.3100	.5820	.8530
X/CML				
.050	-.2395	-.2471	-.2624	-.3222
.230	-.4230	-.6283	-.8981	-.2603
.410	-.1347	-.4273	-.1649	-.2024
.590	-.1609	-.1325	-.2515	-.2257
.770	-.1947	-.2253	-.2428	-.2690
.950	-.2122	-.2384	-.2428	-.2712

BETA (1) = -5.050 ALPHA (2) = 2.120 Q(PSF) = 42.827 PO = 2115.0 RUN NO = 39.000

SECTION (1)MAIN LND GR DR-I DEPENDENT VARIABLE CP

Y/BML	.0760	.3100	.5820	.8530
X/CML				
.050	-.1800	-.1887	-.2104	-.3566
.230	-.3792	-.5566	-.8070	-.2119
.410	-.1092	-.3563	-.1223	-.1512
.590	-.1212	-.0831	-.1952	-.1724
.770	-.1440	-.1658	-.1898	-.2094
.950	-.1636	-.1810	-.1941	-.2094

BETA (1) = -5.050 ALPHA (3) = 4.190 Q(PSF) = 42.827 PO = 2115.0 RUN NO = 39.000

SECTION (1)MAIN LND GR DR-I DEPENDENT VARIABLE CP

Y/BML	.0760	.3100	.5820	.8530
X/CML				
.050	-.1243	-.1341	-.1330	-.2814
.230	-.5886	-.4831	-.7028	-.1146
.410	-.3157	-.2841	-.0558	-.1035
.590	-.0841	-.0297	-.1308	-.1197
.770	-.0971	-.1058	-.1330	-.1439
.950	-.1156	-.1243	-.1384	-.1471

OA163B MAIN GEAR DOOR INNER SURFACE (RFPF05)

BETA (1) = -5.050 ALPHA (4) = 6.270 Q(PSF) = 42.827 PO = 2115.0 RUN NO = 39.000

SECTION (1)MAIN LND GR DR-I DEPENDENT VARIABLE CP

Y/BML	.0760	.3100	.5820	.8530
X/CML				
.050	-.5307	-.0362	-.0536	-.3176
.230	-.1960	-.3916	-.6003	-.0964
.410	-.0166	-.1753	.0170	-.0640
.590	-.0231	.0126	-.0471	-.0681
.770	-.0340	-.0384	-.0644	-.0373
.950	-.0481	-.0492	-.0655	-.0362

BETA (2) = -4.050 ALPHA (1) = .050 Q(PSF) = 42.862 PO = 2115.0 RUN NO = 40.000

SECTION (1)MAIN LND GR DR-I DEPENDENT VARIABLE CP

Y/BML	.0760	.3100	.5820	.8530
X/CML				
.050	-.2196	-.2304	-.2576	-.3192
.230	-.4150	-.6158	-.8752	-.2526
.410	-.1382	-.4139	-.1675	-.1971
.590	-.1523	-.1241	-.2402	-.2112
.770	-.1805	-.2055	-.2272	-.2587
.950	-.1968	-.2196	-.2413	-.2608

BETA (2) = -4.050 ALPHA (2) = 2.110 Q(PSF) = 42.862 PO = 2115.0 RUN NO = 40.000

SECTION (1)MAIN LND GR DR-I DEPENDENT VARIABLE CP

Y/BML	.0760	.3100	.5820	.8530
X/CML				
.050	-.1697	-.1816	-.1978	-.3334
.230	-.6289	-.5453	-.7754	-.1437
.410	-.3597	-.3401	-.1035	-.1437
.590	-.1176	-.0709	-.1751	-.1628
.770	-.1382	-.1545	-.1773	-.2077
.950	-.1545	-.1642	-.1870	-.2044

OA163B MAIN GEAR DOOR INNER SURFACE (RFPF05)

BETA (2) = -4.050 ALPHA (3) = 4.190 Q(PSF) = 42.862 PO = 2115.0 RUN NO = 40.000

SECTION (1)MAIN LND GR DR-I DEPENDENT VARIABLE CP

Y/BML	.0760	.3100	.5820	.8530
X/CML				
.050	-.5957	-.0987	-.1172	-.3233
.230	-.2603	-.4701	-.6864	-.1192
.410	-.0626	-.2461	-.0331	-.0958
.590	-.0670	-.0309	-.1096	-.1172
.770	-.0801	-.0877	-.1303	-.1074
.950	-.0987	-.1096	-.1172	-.1019

BETA (2) = -4.050 ALPHA (4) = 6.240 Q(PSF) = 42.862 PO = 2115.0 RUN NO = 40.000

SECTION (1)MAIN LND GR DR-I DEPENDENT VARIABLE CP

Y/BML	.0760	.3100	.5820	.8530
X/CML				
.050	-.0525	-.0373	-.0504	-.3958
.230	-.1624	-.4007	-.5846	-.0904
.410	-.0210	-.1733	.0257	-.0682
.590	-.0308	-.0025	-.0417	-.0752
.770	-.0384	-.0395	-.0656	-.0275
.950	-.0558	-.0493	-.0667	-.0286

BETA (3) = -2.970 ALPHA (1) = .070 Q(PSF) = 42.822 PO = 2115.1 RUN NO = 41.000

SECTION (1)MAIN LND GR DR-I DEPENDENT VARIABLE CP

Y/BML	.0760	.3100	.5820	.8530
X/CML				
.050	-.2142	-.2250	-.2608	-.3585
.230	-.6853	-.5952	-.8568	-.1850
.410	-.4052	-.3868	-.1512	-.1800
.590	-.1545	-.1132	-.2163	-.1971
.770	-.1718	-.1968	-.2142	-.2456
.950	-.1892	-.2098	-.2283	-.2467

OA163B MAIN GEAR DOOR INNER SURFACE (RFPF05)

BETA (3) = -2.970 ALPHA (2) = 2.110 Q(PSF) = 42.822 PO = 2115.1 RUN NO = 41.000

SECTION (1)MAIN LND GR DR-I DEPENDENT VARIABLE CP

Y/BML	.0760	.3100	.5820	.8530
X/CML				
.050	-.1487	-.1661	-.1792	-.3187
.230	-.6308	-.5392	-.7791	-.1444
.410	-.3221	-.3189	-.0810	-.1342
.590	-.1094	-.0581	-.1596	-.1504
.770	-.1247	-.1432	-.1650	-.1934
.950	-.1421	-.1563	-.1759	-.1988

BETA (3) = -2.960 ALPHA (3) = 4.190 Q(PSF) = 42.822 PO = 2115.1 RUN NO = 41.000

SECTION (1)MAIN LND GR DR-I DEPENDENT VARIABLE CP

Y/BML	.0760	.3100	.5820	.8530
X/CML				
.050	-.0994	-.0820	-.0918	-.3272
.230	-.2202	-.4684	-.6600	-.1188
.410	-.0558	-.2268	-.0210	-.0965
.590	-.0646	-.0286	-.0896	-.1127
.770	-.0754	-.0820	-.1179	-.0896
.950	-.0918	-.0863	-.1103	-.0939

BETA (3) = -2.970 ALPHA (4) = 6.260 Q(PSF) = 42.822 PO = 2115.1 RUN NO = 41.000

SECTION (1)MAIN LND GR DR-I DEPENDENT VARIABLE CP

Y/BML	.0760	.3100	.5820	.8530
X/CML				
.050	-.0363	-.0189	-.0254	-.5022
.230	-.1203	-.3876	-.5599	-.0744
.410	-.0080	-.1563	.0421	-.0470
.590	-.0221	-.0014	-.0309	-.0521
.770	-.0287	-.0243	-.0516	-.0167
.950	-.0461	-.0341	-.0461	-.0145

OA163B MAIN GEAR DOOR INNER SURFACE (RFPF05)

BETA (4) = -2.030 ALPHA (1) = .030 Q(PSF) = 42.880 PO = 2115.0 RUN NO = 42.000

SECTION (1)MAIN LND GR DR-I DEPENDENT VARIABLE CP

Y/BML	.0760	.3100	.5820	.8530
X/CML				
.050	-.1947	-.2121	-.2436	-.3285
.230	-.3674	-.5901	-.8366	-.1902
.410	-.1393	-.3674	-.1337	-.1709
.590	-.1459	-.1013	-.2034	-.1863
.770	-.1632	-.1817	-.2002	-.2295
.950	-.1795	-.1915	-.2219	-.2295

BETA (4) = -2.030 ALPHA (2) = 2.120 Q(PSF) = 42.880 PO = 2115.0 RUN NO = 42.000

SECTION (1)MAIN LND GR DR-I DEPENDENT VARIABLE CP

Y/BML	.0760	.3100	.5820	.8530
X/CML				
.050	-.1405	-.1427	-.1525	-.3307
.230	-.6264	-.5220	-.7405	-.1509
.410	-.2807	-.2840	-.0655	-.1257
.590	-.1047	-.0590	-.1471	-.1469
.770	-.1155	-.1221	-.1634	-.1579
.950	-.1297	-.1405	-.1601	-.1623

BETA (4) = -2.030 ALPHA (3) = 4.170 Q(PSF) = 42.880 PO = 2115.0 RUN NO = 42.000

SECTION (1)MAIN LND GR DR-I DEPENDENT VARIABLE CP

Y/BML	.0760	.3100	.5820	.8530
X/CML				
.050	-.0788	-.0712	-.0788	-.3773
.230	-.1791	-.4582	-.6403	-.1098
.410	-.0952	-.1977	-.0090	-.0875
.590	-.0646	-.0341	-.0832	-.1027
.770	-.0712	-.0788	-.1061	-.0854
.950	-.0886	-.0875	-.1017	-.0832

OA163B MAIN GEAR DOOR INNER SURFACE (RFPF05)

BETA (4) = -2.030 ALPHA (4) = 6.260 Q(PSF) = 42.880 PO = 2115.0 RUN NO = 42.000

SECTION (1)MAIN LND GR DR-I DEPENDENT VARIABLE CP

Y/BML	.0760	.3100	.5820	.8530
X/CML				
.050	-.5262	-.0101	-.0166	-.5426
.230	-.0872	-.3762	-.5327	-.0590
.410	-.0058	-.1263	.0496	-.0367
.590	-.0199	.0018	-.0199	-.0388
.770	-.0264	-.0231	-.0416	-.0101
.950	-.0470	-.0275	-.0383	-.0101

BETA (5) = -1.040 ALPHA (1) = .050 Q(PSF) = 42.920 PO = 2115.1 RUN NO = 43.000

SECTION (1)MAIN LND GR DR-I DEPENDENT VARIABLE CP

Y/BML	.0760	.3100	.5820	.8530
X/CML				
.050	-.1827	-.1979	-.2001	-.3203
.230	-.3207	-.5791	-.7963	-.2002
.410	-.1317	-.3489	-.1111	-.1609
.590	-.1437	-.1035	-.1882	-.1750
.770	-.1556	-.1686	-.1958	-.2164
.950	-.1719	-.1784	-.2110	-.2142

BETA (5) = -1.040 ALPHA (2) = 2.120 Q(PSF) = 42.920 PO = 2115.1 RUN NO = 43.000

SECTION (1)MAIN LND GR DR-I DEPENDENT VARIABLE CP

Y/BML	.0760	.3100	.5820	.8530
X/CML				
.050	-.1238	-.1183	-.1259	-.2892
.230	-.2266	-.5016	-.7052	-.1564
.410	-.0859	-.2624	-.0545	-.1202
.590	-.0989	-.0620	-.1259	-.1463
.770	-.1075	-.1108	-.1573	-.1465
.950	-.1248	-.1270	-.1487	-.1422

OA163B MAIN GEAR DOOR INNER SURFACE (RFPF05)

BETA (5) = -1.040 ALPHA (3) = 4.170 Q(PSF) = 42.920 PO = 2115.1 RUN NO = 43.000

SECTION (1)MAIN LND GR DR-I DEPENDENT VARIABLE CP

Y/BML	.0760	.3100	.5820	.8530
X/CML				
.050	-.0711	-.0526	-.0624	-.4778
.230	-.1331	-.4410	-.6130	-.1046
.410	-.0961	-.1799	.0061	-.0773
.590	-.0591	-.0330	-.0678	-.0924
.770	-.0656	-.0732	-.0950	-.0721
.950	-.0841	-.0732	-.0841	-.0678

BETA (5) = -1.040 ALPHA (4) = 6.250 Q(PSF) = 42.920 PO = 2115.1 RUN NO = 43.000

SECTION (1)MAIN LND GR DR-I DEPENDENT VARIABLE CP

Y/BML	.0760	.3100	.5820	.8530
X/CML				
.050	-.0243	.0050	-.0047	-.5348
.230	-.0450	-.3640	-.4969	-.0561
.410	-.0014	-.1016	.0616	-.0237
.590	-.0134	.0083	-.0079	-.0267
.770	-.0210	-.0177	-.0308	-.0014
.950	-.0417	-.0177	-.0221	-.0047

BETA (6) = .000 ALPHA (1) = .040 Q(PSF) = 42.807 PO = 2115.1 RUN NO = 44.000

SECTION (1)MAIN LND GR DR-I DEPENDENT VARIABLE CP

Y/BML	.0760	.3100	.5820	.8530
X/CML				
.050	-.1655	-.1710	-.1775	-.2762
.230	-.6676	-.5633	-.7818	-.2024
.410	-.2992	-.3166	-.0916	-.1499
.590	-.1351	-.0862	-.1699	-.1731
.770	-.1438	-.1568	-.1938	-.1938
.950	-.1601	-.1666	-.1960	-.1938

OA163B MAIN GEAR DOOR INNER SURFACE (RFPF05)

BETA (6) = .000 ALPHA (2) = 2.120 Q(PSF) = 42.807 PO = 2115.1 RUN NO = 44.000

SECTION (1)MAIN LND GR DR-I DEPENDENT VARIABLE CP

Y/BML	.0760	.3100	.5820	.8530
X/CML				
.050	-.1061	-.0941	-.1072	-.3419
.230	-.6054	-.4963	-.6915	-.1443
.410	-.1955	-.2271	-.0308	-.1098
.590	-.0908	-.0581	-.1115	-.1331
.770	-.0963	-.1050	-.1366	-.1311
.950	-.1148	-.1093	-.1311	-.1311

BETA (6) = .000 ALPHA (3) = 4.170 Q(PSF) = 42.807 PO = 2115.1 RUN NO = 44.000

SECTION (1)MAIN LND GR DR-I DEPENDENT VARIABLE CP

Y/BML	.0760	.3100	.5820	.8530
X/CML				
.050	-.0515	-.0319	-.0461	-.4763
.230	-.0886	-.4154	-.5777	-.1016
.410	-.0308	-.1474	.0257	-.0693
.590	-.0483	-.0232	-.0493	-.0743
.770	-.0537	-.0526	-.0744	-.0537
.950	-.0733	-.0559	-.0679	-.0493

BETA (6) = .000 ALPHA (4) = 6.260 Q(PSF) = 42.807 PO = 2115.1 RUN NO = 44.000

SECTION (1)MAIN LND GR DR-I DEPENDENT VARIABLE CP

Y/BML	.0760	.3100	.5820	.8530
X/CML				
.050	-.0156	.0148	.0072	-.6025
.230	-.0145	-.3547	-.4791	-.0551
.410	.0105	-.0897	.0650	-.0146
.590	-.0058	.0170	.0116	-.0116
.770	-.0156	-.0123	-.0221	.0061
.950	-.0374	-.0123	-.0080	.0050

OA163B MAIN GEAR DOOR INNER SURFACE (RFPF05)

BETA (7) = .980 ALPHA (1) = .070 Q(PSF) = 42.847 PO = 2115.1 RUN NO = 45.000

SECTION (1)MAIN LND GR DR-I DEPENDENT VARIABLE CP

Y/BML	.0760	.3100	.5820	.8530
X/CML				
.050	-.1461	-.1374	-.1526	-.2784
.230	-.2266	-.5420	-.7530	-.1824
.410	-.1091	-.2722	-.0721	-.1419
.590	-.1254	-.0895	-.1482	-.1652
.770	-.1352	-.1417	-.1830	-.1809
.950	-.1515	-.1526	-.1722	-.1852

BETA (7) = .980 ALPHA (2) = 2.120 Q(PSF) = 42.847 PO = 2115.1 RUN NO = 45.000

SECTION (1)MAIN LND GR DR-I DEPENDENT VARIABLE CP

Y/BML	.0760	.3100	.5820	.8530
X/CML				
.050	-.0993	-.0797	-.0840	-.4127
.230	-.1362	-.4864	-.6549	-.1298
.410	-.0710	-.1960	-.0221	-.0994
.590	-.0884	-.0623	-.0960	-.1207
.770	-.0927	-.0960	-.1265	-.1199
.950	-.1123	-.0971	-.1167	-.1156

BETA (7) = .980 ALPHA (3) = 4.170 Q(PSF) = 42.847 PO = 2115.1 RUN NO = 45.000

SECTION (1)MAIN LND GR DR-I DEPENDENT VARIABLE CP

Y/BML	.0760	.3100	.5820	.8530
X/CML				
.050	-.0526	-.0210	-.0287	-.4735
.230	-.0559	-.4189	-.5563	-.1007
.410	-.0308	-.1246	.0301	-.0551
.590	-.0450	-.0210	-.0374	-.0612
.770	-.0526	-.0537	-.0646	-.0461
.950	-.0723	-.0483	-.0581	-.0450

OA163B MAIN GEAR DOOR INNER SURFACE (RFPF05)

BETA (7) = .980 ALPHA (4) = 6.240 Q(PSF) = 42.847 PO = 2115.1 RUN NO = 45.000

SECTION (1)MAIN LND GR DR-I DEPENDENT VARIABLE CP

Y/BML	.0760	.3100	.5820	.8530
X/CML				
.050	-.0069	.0398	.0148	-.5668
.230	.0126	-.3388	-.4324	-.0560
.410	.0181	-.0547	.0681	-.0055
.590	.0007	.0257	.0257	.0005
.770	-.0101	-.0025	-.0069	.0170
.950	-.0341	-.0003	.0018	.0213

BETA (8) = 1.970 ALPHA (1) = .060 Q(PSF) = 42.845 PO = 2115.1 RUN NO = 46.000

SECTION (1)MAIN LND GR DR-I DEPENDENT VARIABLE CP

Y/BML	.0760	.3100	.5820	.8530
X/CML				
.050	-.1317	-.1652	-.1263	-.2537
.230	-.1806	-.5356	-.7234	-.1538
.410	-.1013	-.2511	-.0590	-.1366
.590	-.1208	-.0861	-.1393	-.1538
.770	-.1252	-.1328	-.1697	-.1719
.950	-.1458	-.1339	-.1643	-.1751

BETA (8) = 1.970 ALPHA (2) = 2.100 Q(PSF) = 42.845 PO = 2115.1 RUN NO = 46.000

SECTION (1)MAIN LND GR DR-I DEPENDENT VARIABLE CP

Y/BML	.0760	.3100	.5820	.8530
X/CML				
.050	-.0862	-.0590	-.0634	-.3794
.230	-.0971	-.4669	-.6191	-.1328
.410	-.0938	-.1602	-.0090	-.0873
.590	-.0819	-.0580	-.0819	-.1055
.770	-.0862	-.0917	-.1123	-.0993
.950	-.1047	-.0895	-.0982	-.0971

OA163B MAIN GEAR DOOR INNER SURFACE (RFPF05)

BETA (8) = 1.970 ALPHA (3) = 4.180 Q(PSF) = 42.845 PO = 2115.1 RUN NO = 46.000

SECTION (1)MAIN LND GR DR-I DEPENDENT VARIABLE CP

Y/BML	.0760	.3100	.5820	.8530
X/CML				
.050	-.0450	-.0080	-.0232	-.5244
.230	-.5423	-.4017	-.5249	-.1038
.410	-.0559	-.0919	.0367	-.0389
.590	-.0385	-.0080	-.0221	-.0460
.770	-.0461	-.0407	-.0516	-.0320
.950	-.0690	-.0418	-.0396	-.0309

BETA (8) = 1.970 ALPHA (4) = 6.250 Q(PSF) = 42.845 PO = 2115.1 RUN NO = 46.000

SECTION (1)MAIN LND GR DR-I DEPENDENT VARIABLE CP

Y/BML	.0760	.3100	.5820	.8530
X/CML				
.050	-.0112	.0475	.0344	-.5504
.230	.0312	-.3360	-.4221	-.0480
.410	.0257	-.0221	.0704	-.0004
.590	.0105	.0432	.0377	.0147
.770	-.0025	.0105	.0072	.0355
.950	-.0319	.0028	.0159	.0355

BETA (9) = 2.980 ALPHA (1) = .070 Q(PSF) = 42.930 PO = 2115.1 RUN NO = 47.000

SECTION (1)MAIN LND GR DR-I DEPENDENT VARIABLE CP

Y/BML	.0760	.3100	.5820	.8530
X/CML				
.050	-.1197	-.1002	-.1154	-.2869
.230	-.6320	-.5115	-.6992	-.1346
.410	-.1555	-.2076	-.0459	-.1275
.590	-.1132	-.0741	-.1230	-.1426
.770	-.1186	-.1208	-.1512	-.1555
.950	-.1371	-.1219	-.1403	-.1544

OA163B MAIN GEAR DOOR INNER SURFACE (RFPF05)

BETA (9) = 2.990 ALPHA (2) = 2.100 Q(PSF) = 42.930 PO = 2115.1 RUN NO = 47.000

SECTION (1)MAIN LND GR DR-I DEPENDENT VARIABLE CP

Y/BML	.0760	.3100	.5820	.8530
X/CML				
.050	-.0742	-.0438	-.0514	-.3374
.230	-.0655	-.4498	-.6029	-.1265
.410	-.0600	-.1317	-.0025	-.0771
.590	-.0742	-.0470	-.0731	-.0922
.770	-.0763	-.0785	-.0915	-.0796
.950	-.1002	-.0763	-.0807	-.0828

BETA (9) = 2.990 ALPHA (3) = 4.190 Q(PSF) = 42.930 PO = 2115.1 RUN NO = 47.000

SECTION (1)MAIN LND GR DR-I DEPENDENT VARIABLE CP

Y/BML	.0760	.3100	.5820	.8530
X/CML				
.050	-.0394	.0061	-.0025	-.4940
.230	-.0079	-.3913	-.4989	-.1034
.410	-.0047	-.0590	.0365	-.0317
.590	-.0286	.0028	-.0058	-.0337
.770	-.0362	-.0296	-.0373	-.0144
.950	-.0655	-.0318	-.0242	-.0188

BETA (9) = 2.990 ALPHA (4) = 6.260 Q(PSF) = 42.930 PO = 2115.1 RUN NO = 47.000

SECTION (1)MAIN LND GR DR-I DEPENDENT VARIABLE CP

Y/BML	.0760	.3100	.5820	.8530
X/CML				
.050	-.0036	.0616	.0681	-.5311
.230	.0463	-.3244	-.3940	-.0520
.410	.0387	.0083	.0724	.0005
.590	.0224	.0583	.0529	.0248
.770	.0018	.0268	.0213	.0561
.950	-.0308	.0137	.0311	.0550

OA163B MAIN GEAR DOOR INNER SURFACE (RFPF05)

BETA (10) = 4.050 ALPHA (1) = .040 Q(PSF) = 42.912 PO = 2115.1 RUN NO = 48.000

SECTION (1)MAIN LND GR DR-I DEPENDENT VARIABLE CP

Y/BML	.0760	.3100	.5820	.8530
X/CML				
.050	-.1107	-.0804	-.0891	-.2780
.230	-.6367	-.4982	-.6702	-.1473
.410	-.1280	-.1735	-.0360	-.1131
.590	-.1064	-.0761	-.1085	-.1322
.770	-.1085	-.1150	-.1367	-.1324
.950	-.1280	-.1042	-.1226	-.1324

BETA (10) = 4.040 ALPHA (2) = 2.100 Q(PSF) = 42.912 PO = 2115.1 RUN NO = 48.000

SECTION (1)MAIN LND GR DR-I DEPENDENT VARIABLE CP

Y/BML	.0760	.3100	.5820	.8530
X/CML				
.050	-.0677	-.0286	-.0395	-.4198
.230	-.0395	-.4397	-.5767	-.1308
.410	-.0416	-.0819	-.0079	-.0641
.590	-.0623	-.0308	-.0547	-.0762
.770	-.0667	-.0623	-.0764	-.0601
.950	-.0917	-.0645	-.0612	-.0601

BETA (10) = 4.050 ALPHA (3) = 4.190 Q(PSF) = 42.912 PO = 2115.1 RUN NO = 48.000

SECTION (1)MAIN LND GR DR-I DEPENDENT VARIABLE CP

Y/BML	.0760	.3100	.5820	.8530
X/CML				
.050	-.0384	.0203	.0170	-.5314
.230	.0072	-.3801	-.4661	-.1056
.410	-.0014	-.0243	.0333	-.0277
.590	-.0166	.0115	.0072	-.0166
.770	-.0319	-.0210	-.0221	.0072
.950	-.0624	-.0275	-.0090	.0018

OA163B MAIN GEAR DOOR INNER SURFACE (RFPF05)

BETA (10) = 4.050 ALPHA (4) = 6.250 Q(PSF) = 42.912 PO = 2115.1 RUN NO = 48.000

SECTION (1)MAIN LND GR DR-I DEPENDENT VARIABLE CP

Y/BML	.0760	.3100	.5820	.8530
X/CML				
.050	-.0036	.0693	.0790	-.5488
.230	.0507	-.3084	-.3574	-.0702
.410	.0475	.0290	.0682	.0076
.590	.0344	.0714	.0584	.0379
.770	.0083	.0344	.0311	.0714
.950	-.0257	.0159	.0464	.0769

BETA (11) = 5.000 ALPHA (1) = .060 Q(PSF) = 42.847 PO = 2115.1 RUN NO = 49.000

SECTION (1)MAIN LND GR DR-I DEPENDENT VARIABLE CP

Y/BML	.0760	.3100	.5820	.8530
X/CML				
.050	-.1001	-.0654	-.0719	-.3330
.230	-.0762	-.4970	-.6607	-.1475
.410	-.0719	-.1098	-.0491	-.1002
.590	-.0936	-.0741	-.0936	-.1173
.770	-.0990	-.1023	-.1174	-.1066
.950	-.1218	-.0968	-.1001	-.1088

BETA (11) = 5.000 ALPHA (2) = 2.130 Q(PSF) = 42.847 PO = 2115.1 RUN NO = 49.000

SECTION (1)MAIN LND GR DR-I DEPENDENT VARIABLE CP

Y/BML	.0760	.3100	.5820	.8530
X/CML				
.050	-.0600	-.0123	-.0188	-.5016
.230	-.0231	-.4278	-.5287	-.1375
.410	-.0340	-.0578	.0072	-.0508
.590	-.0459	-.0112	-.0264	-.0639
.770	-.0557	-.0491	-.0589	-.0361
.950	-.0849	-.0470	-.0459	-.0372

OA163B MAIN GEAR DOOR INNER SURFACE (RFPF05)

BETA (11) = 5.000 ALPHA (3) = 4.190 Q(PSF) = 42.847 PC = 2115.1 RUN NO = 49.000

SECTION (1)MAIN LND GR DR-I DEPENDENT VARIABLE CP

Y/BML	.0760	.3100	.5820	.8530
X/CML				
.050	-.0364	.0323	.0323	-.5809
.230	.0160	-.3650	-.4305	-.1191
.410	.0094	-.0112	.0411	-.0207
.590	-.0059	.0291	.0225	-.0055
.770	-.0276	-.0091	-.0102	.0236
.950	-.0626	-.0178	.0039	.0225

BETA (11) = 5.000 ALPHA (4) = 6.250 Q(PSF) = 42.847 PC = 2115.1 RUN NO = 49.000

SECTION (1)MAIN LND GR DR-I DEPENDENT VARIABLE CP

Y/BML	.0760	.3100	.5820	.8530
X/CML				
.050	-.0014	.0782	.0957	-.5686
.230	.0542	-.3235	-.3431	-.0948
.410	.0553	.0574	.0520	.0208
.590	.0400	.0782	.0585	.0462
.770	.0105	.0411	.0389	.0847
.950	-.0320	.0160	.0542	.0858

OA163B MAIN GEAR DOOR INNER SURFACE (RFPF06) (27 APR 77)

REFERENCE DATA

SREF = 2690.0000 SQ.FT. XMRP = 1076.7000 IN. XO
LREF = 474.8100 INCHES YMRP = .0000 IN. YO
BREF = 936.6800 INCHES ZMRP = 375.0000 IN. ZO
SCALE = .0405

PARAMETRIC DATA

SPDBRK =	25.000	BDFLAP =	16.300
ELV-L =	.000	ELV-R =	.000
PHI-N =	30.800	THETAN =	5.000
PHI-ML =	32.200	THETML =	5.000
PHI-MR =	32.200	THETMR =	5.000

BETA (1) = -5.030 ALPHA (1) = .010 Q(PSF) = 42.822 PO = 2119.9 RUN NO = 51.000

SECTION (1)MAIN LND GR DR-I DEPENDENT VARIABLE CP

Y/BML	.0760	.3100	.5820	.8530
X/CML				
.050	-.2418	-.2484	-.2680	-.3230
.230	-.4214	-.6270	-.8794	-.2684
.410	-.1352	-.4126	-.1885	-.2117
.590	-.1646	-.1320	-.2571	-.2320
.770	-.1972	-.2299	-.2462	-.2690
.950	-.2168	-.2386	-.2408	-.2658

BETA (1) = -5.030 ALPHA (2) = 2.100 Q(PSF) = 42.822 PO = 2119.9 RUN NO = 51.000

SECTION (1)MAIN LND GR DR-I DEPENDENT VARIABLE CP

Y/BML	.0760	.3100	.5820	.8530
X/CML				
.050	-.1820	-.1950	-.2016	-.3553
.230	-.3702	-.5573	-.7934	-.2198
.410	-.1135	-.3473	-.1254	-.1601
.590	-.1211	-.0754	-.1961	-.1824
.770	-.1483	-.1669	-.1874	-.2114
.950	-.1635	-.1874	-.1929	-.2135

BETA (1) = -5.030 ALPHA (3) = 4.140 Q(PSF) = 42.822 PO = 2119.9 RUN NO = 51.000

SECTION (1)MAIN LND GR DR-I DEPENDENT VARIABLE CP

Y/BML	.0760	.3100	.5820	.8530
X/CML				
.050	-.1246	-.1442	-.1562	-.2891
.230	-.3077	-.4723	-.6892	-.1159
.410	-.0744	-.2859	-.0614	-.1098
.590	-.0821	-.0385	-.1333	-.1280
.770	-.0995	-.1115	-.1355	-.1464
.950	-.1169	-.1246	-.1442	-.1409

GA163B MAIN GEAR DOOR INNER SURFACE (RFPF06)

BETA (1) = -5.040 ALPHA (4) = 8.230 Q(PSF) = 42.822 PO = 2119.3 RUN NO = 51.000

SECTION (1)MAIN LND GR DR-I DEPENDENT VARIABLE CP

Y/BML	.0760	.3100	.5820	.8530
X/CML				
.050	-.0690	-.0559	-.0635	-.3164
.230	-.2150	-.4133	-.6203	-.0[illegible]
.410	-.0319	-.2117	.0018	-.0662
.590	-.0374	.0072	-.0657	-.0804
.770	-.0515	-.0537	-.0804	-.0515
.950	-.0635	-.0668	-.0810	-.0559

BETA (2) = -4.030 ALPHA (1) = .010 Q(PSF) = 42.780 PO = 2119.8 RUN NO = 52.000

SECTION (1)MAIN LND GR DR-I DEPENDENT VARIABLE CP

Y/BML	.0760	.3100	.5820	.8530
X/CML				
.050	-.6806	-.2336	-.2587	-.3327
.230	-.4135	-.6141	-.8757	-.2618
.410	-.1377	-.4081	-.1726	-.1990
.590	-.1573	-.1202	-.2467	-.2193
.770	-.1846	-.2129	-.2271	-.2554
.950	-.1987	-.2238	-.2336	-.2532

BETA (2) = -4.030 ALPHA (2) = 2.090 Q(PSF) = 42.780 PO = 2119.8 RUN NO = 52.000

SECTION (1)MAIN LND GR DR-I DEPENDENT VARIABLE CP

Y/BML	.0760	.3100	.5820	.8530
X/CML				
.050	-.1683	-.1858	-.2065	-.3583
.230	-.3592	-.5501	.7661	-.1494
.410	-.1116	-.3396	-.1094	-.1535
.590	-.1181	-.0789	-.1760	-.1697
.770	-.1389	-.1498	-.1749	-.2098
.950	-.1552	-.1687	-.1901	-.2065

C-4

OA163B MAIN GEAR DOOR INNER SURFACE (RFPF06)

BETA (2) = -4.030 ALPHA (3) = 4.140 Q(PSF) = 42.780 PO = 2119.8 RUN NO = 52.000

SECTION (1)MAIN LND GR DR-I DEPENDENT VARIABLE CP

Y/BML	.0760	.3100	.5820	.8530
X/CML				
.050	-.1147	-.1158	-.1300	-.3153
.230	-.2651	-.4743	-.6878	-.1148
.410	-.0711	-.2749	-.0439	-.1037
.590	-.0755	-.0297	-.1158	-.1209
.770	-.0886	-.0951	-.1267	-.1322
.950	-.1060	-.1115	-.1300	-.1278

BETA (2) = -4.030 ALPHA (4) = 6.240 Q(PSF) = 42.780 PO = 2119.8 RUN NO = 52.000

SECTION (1)MAIN LND GR DR-I DEPENDENT VARIABLE CP

Y/BML	.0760	.3100	.5820	.8530
X/CML				
.050	-.5330	-.0428	-.0526	-.3618
.230	-.1702	-.3990	-.5776	-.0996
.410	-.0232	-.1659	.0159	-.0692
.590	-.0308	.0061	-.0493	-.0723
.770	-.0384	-.0450	-.0679	-.0341
.950	-.0581	-.0504	-.0689	-.0363

BETA (3) = -2.950 ALPHA (1) = .010 Q(PSF) = 42.832 PO = 2119.9 RUN NO = 53.000

SECTION (1)MAIN LND GR DR-I DEPENDENT VARIABLE CP

Y/BML	.0760	.3100	.5820	.8530
X/CML				
.050	-.2134	-.2264	-.2558	-.3600
.230	-.4047	-.6003	-.8471	-.1913
.410	-.1427	-.3916	-.1536	-.1913
.590	-.1514	-.1090	-.2177	-.2065
.770	-.1742	-.1971	-.2145	-.2405
.950	-.1916	-.2058	-.2275	-.2395

OA163B MAIN GEAR DOOR INNER SURFACE (RFPF06)

BETA (3) = -2.950 ALPHA (2) = 2.100 Q(PSF) = 42.832 PO = 2119.9 RUN NO = 53.000

SECTION (1)MAIN LND GR DR-I DEPENDENT VARIABLE CP

Y/BML	.0760	.3100	.5820	.8530
X/CML				
.050	-.1558	-.1711	-.1906	-.3198
.230	-.3189	-.5288	-.7550	-.1500
.410	-.1047	-.3135	-.0906	-.1399
.590	-.1112	-.0677	-.1634	-.1550
.770	-.1276	-.1395	-.1613	-.1961
.950	-.1450	-.1602	-.1732	-.1928

BETA (3) = -2.950 ALPHA (3) = 4.150 Q(PSF) = 42.832 PO = 2119.9 RUN NO = 53.000

SECTION (1)MAIN LND GR DR-I DEPENDENT VARIABLE CP

Y/BML	.0760	.3100	.5820	.8530
X/CML				
.050	-.5901	-.0875	-.1050	-.3297
.230	-.2206	-.4604	-.6567	-.1200
.410	-.0603	-.2151	-.0254	-.1017
.590	-.0701	-.0298	-.0952	-.1200
.770	-.0799	-.1006	-.1213	-.0995
.950	-.0974	-.0952	-.1192	-.1006

BETA (3) = -2.950 ALPHA (4) = 6.220 Q(PSF) = 42.832 PO = 2119.9 RUN NO = 53.000

SECTION (1)MAIN LND GR DR-I DEPENDENT VARIABLE CP

Y/BML	.0760	.3100	.5820	.8530
X/CML				
.050	-.5268	-.0298	-.5650	-.4654
.230	-.1322	-.3862	-.5693	-.0835
.410	-.0156	-.1540	.0334	-.0592
.590	-.0287	.0007	-.0417	-.0612
.770	-.0363	-.0450	-.0559	-.0243
.950	-.0516	-.0352	-.0559	-.0298

DATE 27 APR 77 OA163B PRESSURE DATA LISTING (RFPF06)

OA163B MAIN GEAR DOOR INNER SURFACE

BETA (4) = -2.020 ALPHA (1) = .040 Q(PSF) = 42.867 PO = 2119.8 RUN NO = 54.000

SECTION (1)MAIN LND GR DR-I DEPENDENT VARIABLE CP

Y/BML	.0760	.3100	.5820	.8530
X/CML				
.050	-.1992	-.2166	-.2416	-.3428
.230	-.3644	-.5807	-.8274	-.1923
.410	-.1384	-.3742	-.1307	-.1792
.590	-.1470	-.1014	-.1981	-.1943
.770	-.1623	-.1786	-.1981	-.2253
.950	-.1797	-.1927	-.2166	-.2253

BETA (4) = -2.020 ALPHA (2) = 2.090 Q(PSF) = 42.867 PO = 2119.8 RUN NO = 54.000

SECTION (1)MAIN LND GR DR-I DEPENDENT VARIABLE CP

Y/BML	.0760	.3100	.5820	.8530
X/CML				
.050	-.1463	-.1517	-.1691	-.3213
.230	-.2813	-.5274	-.7365	-.1573
.410	-.0983	-.2933	-.0700	-.1290
.590	-.1060	-.0624	-.1463	-.1492
.770	-.1190	-.1299	-.1826	-.1735
.950	-.1375	-.1473	-.1691	-.1746

BETA (4) = -2.020 ALPHA (3) = 4.150 Q(PSF) = 42.867 PO = 2119.8 RUN NO = 54.000

SECTION (1)MAIN LND GR DR-I DEPENDENT VARIABLE CP

Y/BML	.0760	.3100	.5820	.8530
X/CML				
.050	-.5875	-.0722	-.6256	-.3710
.230	-.1735	-.4513	-.6300	-.1148
.410	-.0526	-.2106	-.0134	-.0925
.590	-.0668	-.0406	-.0809	-.1128
.770	-.0733	-.0875	-.1125	-.0875
.950	-.0897	-.0918	-.1093	-.0875

OA163B MAIN GEAR DOOR INNER SURFACE (RFPF06)

BETA (4) = -2.020 ALPHA (4) = 6.220 Q(PSF) = 42.867 PO = 2119.8 RUN NO = 54.000

SECTION (1)MAIN LND GR DR-I DEPENDENT VARIABLE CP

Y/BML	.0760	.3100	.5820	.8530
X/CML				
.050	-.5236	-.0133	-.4617	-.5281
.230	-.0904	-.3749	-.5344	-.0670
.410	-.0068	-.1273	.0473	-.0418
.590	-.0242	-.0025	-.0253	-.0498
.770	-.0329	-.0340	-.0437	-.0199
.950	-.0492	-.0340	-.0437	-.0188

BETA (5) = -1.020 ALPHA (1) = .030 Q(PSF) = 42.815 PO = 2119.8 RUN NO = 55.000

SECTION (1)MAIN LND GR DR-I DEPENDENT VARIABLE CP

Y/BML	.0760	.3100	.5820	.8530
X/CML				
.050	-.1811	-.2029	-.2170	-.3273
.230	-.3237	-.5720	-.7996	-.1977
.410	-.1310	-.3411	-.1136	-.1654
.590	-.1419	-.0983	-.1865	-.1785
.770	-.1528	-.1658	-.1898	-.2159
.950	-.1713	-.1756	-.2148	-.2148

BETA (5) = -1.020 ALPHA (2) = 2.100 Q(PSF) = 42.815 PO = 2119.8 RUN NO = 55.000

SECTION (1)MAIN LND GR DR-I DEPENDENT VARIABLE CP

Y/BML	.0760	.3100	.5820	.8530
X/CML				
.050	-.1266	-.1200	-.1211	-.2927
.230	-.2289	-.5020	-.6925	-.1622
.410	-.0841	-.2669	-.0504	-.1258
.590	-.0994	-.0624	-.1255	-.1511
.770	-.1092	-.1135	-.1570	-.1440
.950	-.1287	-.1320	-.1483	-.1462

OA163B MAIN GEAR DOOR INNER SURFACE (RFPF06)

BETA (5) = -1.020 ALPHA (3) = 4.150 Q(PSF) = 42.815 PO = 2119.8 RUN NO = 55.000

SECTION (1)MAIN LND GR DR-I DEPENDENT VARIABLE CP

Y/BML	.0760	.3100	.5820	.8530
X/CML				
.050	-.5745	-.0570	-.0061	-.4602
.230	-.1354	-.4394	-.6029	-.1118
.410	-.0428	-.1866	.0018	-.0794
.590	-.0603	-.0308	-.0690	-.1027
.770	-.0868	-.0744	-.0984	-.0788
.950	-.0853	-.0744	-.0875	-.0768

BETA (5) = -1.020 ALPHA (4) = 6.240 Q(PSF) = 42.815 PO = 2119.8 RUN NO = 55.000

SECTION (1)MAIN LND GR DR-I DEPENDENT VARIABLE CP

Y/BML	.0760	.3100	.5820	.8530
X/CML				
.050	-.5147	.0050	-.3948	-.5301
.230	-.0525	-.3676	-.5082	-.0662
.410	.0007	-.1104	.0573	-.0348
.590	-.0137	.0018	-.0123	-.0379
.770	-.0254	-.0265	-.0374	-.0080
.950	-.0461	-.0265	-.0265	-.0112

BETA (6) = .000 ALPHA (1) = .010 Q(PSF) = 42.787 PO = 2119.8 RUN NO = 56.000

SECTION (1)MAIN LND GR DR-I DEPENDENT VARIABLE CP

Y/BML	.0760	.3100	.5820	.8530
X/CML				
.050	-.2840	-.1699	-.1884	-.2893
.230	-.2786	-.5503	-.7634	-.2055
.410	-.1199	-.3318	-.0938	-.1650
.590	-.1340	-.0884	-.1732	-.1732
.770	-.1438	-.1547	-.1884	-.1960
.950	-.1623	-.1688	-.1971	-.1938

OA163B MAIN GEAR DOOR INNER SURFACE (RFPF06)

BETA (6) = .000 ALPHA (2) = 2.100 Q(PSF) = 42.787 PO = 2119.8 RUN NO = 56.000

SECTION (1)MAIN LND GR DR-I DEPENDENT VARIABLE CP

Y/BML	.0760	.3100	.5820	.8530
X/CML				
.050	-.6340	-.1016	-.5796	-.3040
.230	-.1800	-.4925	-.6820	-.1603
.410	-.0798	-.2312	-.0373	-.1188
.590	-.0961	-.0591	-.1125	-.1441
.770	-.1038	-.1038	-.1506	-.1375
.950	-.1223	-.1103	-.1408	-.1343

BETA (6) = .000 ALPHA (3) = 4.160 Q(PSF) = 42.787 PO = 2119.8 RUN NO = 56.000

SECTION (1)MAIN LND GR DR-I DEPENDENT VARIABLE CP

Y/BML	.0760	.3100	.5820	.8530
X/CML				
.050	-.5709	-.0451	-.5774	-.4567
.230	-.0974	-.4214	-.5720	-.1089
.410	-.0396	-.1454	.0159	-.0744
.590	-.0538	-.0221	-.0592	-.0835
.770	-.0636	-.0680	-.0811	-.0625
.950	-.0811	-.0658	-.0778	-.0614

BETA (6) = .000 ALPHA (4) = 6.220 Q(PSF) = 42.787 PO = 2119.8 RUN NO = 56.000

SECTION (1)MAIN LND GR DR-I DEPENDENT VARIABLE CP

Y/BML	.0760	.3100	.5820	.8530
X/CML				
.050	-.5094	.0127	.0039	-.5943
.230	-.0244	-.3564	-.4843	-.0664
.410	.0050	-.0888	.0629	-.0217
.590	-.0091	.0116	.0050	-.0238
.770	-.0200	-.0167	-.0244	.0007
.950	-.0429	-.0189	-.0167	.0007

OA163B MAIN GEAR DOOR INNER SURFACE (RFPF06)

BETA (7) = 1.000 ALPHA (1) = .020 Q(PSF) = 42.847 PO = 2119.9 RUN NO = 57.000

SECTION (1)MAIN LND GR DR-I DEPENDENT VARIABLE CP

Y/BML	.0760	.3100	.5820	.8530
X/CML				
.050	-.6811	-.1621	-.6703	-.2759
.230	-.2349	-.5378	-.7452	-.1952
.410	-.1122	-.2902	-.0763	-.1487
.590	-.1306	-.0894	-.1578	-.1689
.770	-.1382	-.1556	-.1893	-.1838
.950	-.1545	-.1556	-.1795	-.1860

BETA (7) = 1.000 ALPHA (2) = 2.080 Q(PSF) = 42.847 PO = 2119.9 RUN NO = 57.000

SECTION (1)MAIN LND GR DR-I DEPENDENT VARIABLE CP

Y/BML	.0760	.3100	.5820	.8530
X/CML				
.050	-.6203	-.0808	-.6530	-.3694
.230	-.1396	-.4746	-.6486	-.1349
.410	-.0732	-.1961	-.0297	-.1076
.590	-.0895	-.0612	-.0939	-.1288
.770	-.0960	-.0993	-.1330	-.1276
.950	-.1156	-.0960	-.1222	-.1254

BETA (7) = 1.000 ALPHA (3) = 4.150 Q(PSF) = 42.847 PO = 2115.9 RUN NO = 57.000

SECTION (1)MAIN LND GR DR-I DEPENDENT VARIABLE CP

Y/BML	.0760	.3100	.5820	.8530
X/CML				
.050	-.5626	-.0275	-.5474	-.4735
.230	-.0623	-.4147	-.5474	-.1086
.410	-.0330	-.1330	.0170	-.0641
.590	-.0493	-.0243	-.0460	-.0702
.770	-.0547	-.0547	-.0678	-.0504
.950	-.0765	-.0[illegible]7	-.0580	-.0525

OA163B MAIN GEAR DOOR INNER SURFACE (RFPF06)

BETA (7) = 1.000 ALPHA (4) = 6.240 Q(PSF) = 42.847 PO = 2119.9 RUN NO = 57.000

SECTION (1)MAIN LND GR DR-I DEPENDENT VARIABLE CP

Y/BML	.0760	.3100	.5820	.8530
X/CML				
.050	-.4992	.0225	-.4523	-.5727
.230	.0094	-.3355	-.4403	-.0643
.410	.0127	-.0429	.0618	-.0085
.590	-.0025	.0280	.0160	-.0095
.770	-.0123	-.0058	-.0091	.0127
.950	-.0374	-.0058	-.0047	.0149

BETA (8) = 1.980 ALPHA (1) = .010 Q(PSF) = 42.860 PO = 2119.9 RUN NO = 58.000

SECTION (1)MAIN LND GR DR-I DEPENDENT VARIABLE CP

Y/BML	.0760	.3100	.5820	.8530
X/CML				
.050	-.6701	-.1306	-.6213	-.2466
.230	-.1892	-.5355	-.7266	-.1649
.410	-.1024	-.2674	-.0655	-.1427
.590	-.1208	-.0893	-.1393	-.1618
.770	-.1273	-.1317	-.1718	-.1740
.950	-.1469	-.1447	-.1653	-.1708

BETA (8) = 1.980 ALPHA (2) = 2.110 Q(PSF) = 42.860 PO = 2119.9 RUN NO = 58.000

SECTION (1)MAIN LND GR DR-I DEPENDENT VARIABLE CP

Y/BML	.0760	.3100	.5820	.8530
X/CML				
.050	-.6140	-.0625	-.5791	-.4127
.230	-.1039	-.4658	-.6271	-.1362
.410	-.0668	-.1769	-.0101	-.0956
.590	-.0843	-.0570	-.0864	-.1159
.770	-.0886	-.0897	-.1107	-.1072
.950	-.1050	-.0908	-.1017	-.1082

OA163B MAIN GEAR DOOR INNER SURFACE (RFPF06)

BETA (8) = 1.980 ALPHA (3) = 4.160 Q(PSF) = 42.860 PO = 2119.9 RUN NO = 58.000

SECTION (1)MAIN LND GR DR-I DEPENDENT VARIABLE CP

Y/BML	.0760	.3100	.5820	.8530
X/CML				
.050	-.5587	-.0090	-.0221	-.5224
.230	-.0319	-.3965	-.5184	-.1147
.410	-.0286	-.0917	.0344	-.0490
.590	-.0406	-.0123	-.0330	-.0560
.770	-.0471	-.0493	-.0526	-.0362
.950	-.0722	-.0449	-.0439	-.0362

BETA (8) = 1.980 ALPHA (4) = 6.240 Q(PSF) = 42.860 PO = 2119.9 RUN NO = 58.000

SECTION (1)MAIN LND GR DR-I DEPENDENT VARIABLE CP

Y/BML	.0760	.3100	.5820	.8530
X/CML				
.050	-.49[illegible]	.0398	.0398	-.5635
.230	.0279	-.3310	-.4212	-.0631
.410	.0224	-.0286	.0703	-.0115
.590	.0072	.0409	.0289	.0076
.770	-.0058	.0061	.0039	.0279
.950	-.0351	.0028	.0126	.0279

BETA (9) = 2.980 ALPHA (1) = .010 Q(PSF) = 42.877 PO = 2119.9 RUN NO = 59.000

SECTION (1)MAIN LND GR DR-I DEPENDENT VARIABLE CP

Y/BML	.0760	.3100	.5820	.8530
X/CML				
.050	-.6643	-.1112	-.1123	-.2741
.230	-.1449	-.5132	-.6969	-.1367
.410	-.1003	-.2025	-.0514	-.1367
.590	-.1155	-.0807	-.1296	-.1529
.770	-.1188	-.1231	-.1557	-.1622
.950	-.1394	-.1286	-.1492	-.1601

OA163B MAIN GEAR DOOR INNER SURFACE (RFPF06)

BETA (9) = 2.980 ALPHA (2) = 2.100 Q(PSF) = 42.877 PO = 2119.9 RUN NO = 59.000

SECTION (1)MAIN LND GR DR-I DEPENDENT VARIABLE CP

Y/BML	.0760	.3100	.5820	.8530
X/CML				
.050	-.6128	-.0525	-.0644	-.3617
.230	-.0677	-.4478	-.5955	-.1346
.410	-.0611	-.1296	-.0068	-.0862
.590	-.0753	-.0470	-.0763	-.1023
.770	-.0807	-.0774	-.0959	-.0872
.950	-.1035	-.0785	-.0829	-.0861

BETA (9) = 2.980 ALPHA (3) = 4.150 Q(PSF) = 42.877 PO = 2119.9 RUN NO = 59.000

SECTION (1)MAIN LND GR DR-I DEPENDENT VARIABLE CP

Y/BML	.0760	.3100	.5820	.8530
X/CML				
.050	-.5532	.0039	-.5064	-.4900
.230	-.0112	-.3965	-.5021	-.1137
.410	-.0188	-.0689	.0301	-.0399
.590	-.0319	.0007	-.0156	-.0429
.770	-.0417	-.0352	-.0417	-.0188
.950	-.0667	-.0352	-.0308	-.0210

BETA (9) = 2.980 ALPHA (4) = 6.230 Q(PSF) = 42.877 PO = 2119.9 RUN NO = 59.000

SECTION (1)MAIN LND GR DR-I DEPENDENT VARIABLE CP

Y/BML	.0760	.3100	.5820	.8530
X/CML				
.050	-.4870	.0573	-.4021	-.5388
.230	.0377	-.3183	-.4076	-.0611
.410	.0322	-.0003	.0682	-.0044
.590	.0159	.0224	.0399	.0187
.770	-.0003	.0083	.0148	.0453
.950	-.0352	.0061	.0224	.0442

OA163B MAIN GEAR DOOR INNER SURFACE (RFPF06)

BETA (10) = 4.060 ALPHA (1) = .020 Q(PSF) = 42.825 PO = 2119.9 RUN NO = 60.000

SECTION (1)MAIN LND GR DR-I DEPENDENT VARIABLE CP

Y/BML	.0760	.3100	.5820	.8530
X/CML				
.050	-.6579	-.0926	-.5657	-.3130
.230	-.1077	-.5006	-.6087	-.1476
.410	-.0936	-.1750	-.0394	-.1184
.590	-.1077	-.0850	-.1132	-.1376
.770	-.1099	-.1110	-.1403	-.1392
.950	-.1327	-.1067	-.1262	-.1403

BETA (10) = 4.060 ALPHA (2) = 2.090 Q(PSF) = 42.825 PO = 2119.9 RUN NO = 60.000

SECTION (1)MAIN LND GR DR-I DEPENDENT VARIABLE CP

Y/BML	.0760	.3100	.5820	.8530
X/CML				
.050	-.6151	-.0385	-.5857	-.4087
.230	-.0450	-.4494	-.5770	-.1372
.410	-.0559	-.0908	-.0243	-.0723
.590	-.0679	-.0428	-.0603	-.0855
.770	-.0734	-.0690	-.0875	-.0668
.950	-.0995	-.0625	-.0690	-.0723

BETA (10) = 4.060 ALPHA (3) = 4.160 Q(PSF) = 42.825 PO = 2119.9 RUN NO = 60.000

SECTION (1)MAIN LND GR DR-I DEPENDENT VARIABLE CP

Y/BML	.0760	.3100	.5820	.8530
X/CML				
.050	-.5492	.0105	-.4686	-.5409
.230	.0028	.3717	-.4762	-.1148
.410	-.0058	-.0297	.0366	-.0338
.590	-.0210	.0072	.0028	-.0257
.770	-.0341	-.0275	-.0265	-.0003
.950	-.0678	-.0254	-.0112	-.0014

OA163B MAIN GEAR DOOR INNER SURFACE (RFPF06)

BETA (10) = 4.060 ALPHA (4) = 6.230 Q(PSF) = 42.825 PO = 2119.9 RUN NO = 60.000

SECTION (1)MAIN LND GR DR-I DEPENDENT VARIABLE CP

Y/BML	.0760	.3100	.5820	.8530
X/CML				
.050	-.4838	.0618	-.3594	-.5684
.230	.0465	-.3048	-.1880	-.0856
.410	.0400	.0159	.0738	.0015
.590	.0279	.0312	.0530	.0259
.770	.0050	.0149	.0279	.0651
.950	-.0342	.0094	.0356	.06[illegible]

BETA (11) = 5.010 ALPHA (1) = .050 Q(PSF) = 42.762 PO = 2119.9 RUN NO = 61.000

SECTION (1)MAIN LND GR DR-I DEPENDENT VARIABLE CP

Y/BML	.0760	.3100	.5820	.8530
X/CML				
.050	-.6585	-.0689	-.6336	-.3432
.230	-.0754	-.4954	-.6477	-.1521
.410	-.0885	-.1037	-.0536	-.1066
.590	-.0983	-.0656	-.1037	-.1248
.770	-.1015	-.1004	-.1200	-.1124
.950	-.1255	-.1004	-.1037	-.1124

BETA (11) = 5.010 ALPHA (2) = 2.090 Q(PSF) = 42.762 PO = 2119.9 RUN NO = 61.000

SECTION (1)MAIN LND GR DR-I DEPENDENT VARIABLE CP

Y/BML	.0760	.3100	.5820	.8530
X/CML				
.050	-.6018	-.0222	-.5471	-.5116
.230	-.0309	-.4389	-.5416	-.1518
.410	-.0452	-.0758	-.0036	-.0604
.590	-.0550	-.0233	-.0452	-.0736
.770	-.0659	-.0605	-.0638	-.0495
.950	-.0944	-.0550	-.0517	-.0495

OA163B MAIN GEAR DOOR INNER SURFACE (REF 06)

BETA (I1) = 5.010 ALPHA (3) = 4.160 Q(PSF) = 42.762 PO = 2119.9 RUN NO = 61.000

SECTION (1)MAIN LND GR DR-I DEPENDENT VARIABLE CP

Y/BML	.0760	.3100	.5820	.8530
X/CML				
.050	-.5409	.0246	-.4253	-.5747
.230	.0127	-.3621	-.4308	-.1260
.410	.0028	-.0145	.0290	-.0288
.590	-.0101	.0268	.0181	-.0166
.770	-.0308	-.0221	-.0112	.0170
.950	-.0646	-.0232	.0007	.0214

BETA (I1) = 5.010 ALPHA (4) = 6.250 Q(PSF) = 42.762 PO = 2119.9 RUN NO = 61.000

SECTION (1)MAIN LND GR DR-I DEPENDENT VARIABLE CP

Y/BML	.0760	.3100	.5820	.8530
X/CML				
.050	-.4953	.0792	-.3350	-.5901
.230	.0519	-.3536	-.2009	-.1058
.410	.0497	.0465	.0563	.0127
.590	.0377	.0683	.0584	.0319
.770	.0061	.0170	.0377	.0792
.950	-.0341	.0214	.0508	.0846

OA163B MAIN GEAR DOOR INNER SURFACE (RFPF07) (27 APR 77)

REFERENCE DATA

SREF = 2690.0000 SQ.FT. XMRP = 1076.7000 IN. XO
LREF = 474.8100 INCHES YMRP = .0000 IN. YO
BREF = 936.6800 INCHES ZMRP = 375.0000 IN. ZO
SCALE = .0405

PARAMETRIC DATA

SPDBRK =	25.000	BDFLAP =	.000
ELV-L =	.000	ELV-R =	.000
PHI-N =	66.000	THETAN =	108.000
PHI-ML =	26.000	THETML =	4.000
PHI-MR =	26.000	THETMR =	4.000

BETA (1) = -5.050 ALPHA (1) = .000 Q(PSF) = 42.770 PO = 2117.8 RUN NO = 62.000

SECTION (1)MAIN LND GR DR-I DEPENDENT VARIABLE CP

Y/BML	.0760	.3100	.5820	.8530
X/CML				
.050	-.6556	-.2539	-.2659	-.1441
.230	-.3769	-.6459	-.9256	-.2209
.410	-.1299	-.3552	-.2354	-.2240
.590	-.1810	-.1821	-.2463	-.2412
.770	-.2093	-.2376	-.2507	-.2681
.950	-.2246	-.2365	-.2452	-.2681

BETA (1) = -5.050 ALPHA (2) = 2.070 Q(PSF) = 42.770 PO = 2117.8 RUN NO = 62.000

SECTION (1)MAIN LND GR DR-I DEPENDENT VARIABLE CP

Y/BML	.0760	.3100	.5820	.8530
X/CML				
.050	-.1948	-.2035	-.2133	-.1060
.230	-.3411	-.5858	-.8371	-.1730
.410	-.1019	-.3095	-.1751	-.1740
.590	-.1391	-.1216	-.1915	-.1923
.770	-.1631	-.1904	-.1991	-.2112
.950	-.1751	-.1882	-.1970	-.2112

BETA (1) = -5.050 ALPHA (3) = 4.130 Q(PSF) = 42.770 PO = 2117.8 RUN NO = 62.000

SECTION (1)MAIN LND GR DR-I DEPENDENT VARIABLE CP

Y/BML	.0760	.3100	.5820	.8530
X/CML				
.050	-.5610	-.1473	-.1604	-.0986
.230	-.2888	-.5110	-.7157	-.1218
.410	-.0722	-.2758	-.1092	-.1239
.590	-.0950	-.0765	-.1430	-.1390
.770	-.1136	-.1386	-.1473	-.1538
.950	-.1277	-.1451	-.1451	-.1549

OA163B MAIN GEAR DOOR INNER SURFACE (RFPF07)

BETA (1) = -5.050 ALPHA (4) = 6.190 Q(PSF) = 42.770 PO = 2117.8 RUN NO = 62.000

SECTION (1)MAIN LND GR DR-I DEPENDENT VARIABLE CP

Y/BML	.0760	.3100	.5820	.8530
X/CML				
.050	-.5078	-.0724	-.6290	-.0988
.230	-.2241	-.4249	-.6224	-.0998
.410	-.0342	-.1913	-.0451	-.0866
.590	-.0505	-.0178	-.0855	-.0968
.770	-.0647	-.0833	-.1040	-.0647
.950	-.0756	-.0855	-.0953	-.0604

BETA (2) = -2.020 ALPHA (1) = .000 Q(PSF) = 42.842 PO = 2117.8 RUN NO = 63.000

SECTION (1)MAIN LND GR DR-I DEPENDENT VARIABLE CP

Y/BML	.0760	.3100	.5820	.8530
X/CML				
.050	-.6558	-.2221	-.2514	-.1358
.230	-.3590	-.5938	-.8438	-.1883
.410	-.1373	-.3547	-.1862	-.1883
.590	-.1590	-.1384	-.2047	-.2055
.770	-.1742	-.2058	-.2145	-.2297
.950	-.1895	-.2112	-.2145	-.2253

BETA (2) = -2.030 ALPHA (2) = 2.070 Q(PSF) = 42.842 PO = 2117.8 RUN NO = 63.000

SECTION (1)MAIN LND GR DR-I DEPENDENT VARIABLE CP

Y/BML	.0760	.3100	.5820	.8530
X/CML				
.050	-.6063	-.1685	-.7602	-.1475
.230	-.2940	-.5331	-.7569	-.1475
.410	-.1008	-.2995	-.1259	-.1435
.590	-.1193	-.0877	-.1510	-.1557
.770	-.1302	-.1564	-.1630	-.1903
.950	-.1466	-.1510	-.1663	-.1892

DATE 27 APR 77 OA163B PRESSURE DATA LISTING (RFPF07)

OA163B MAIN GEAR DOOR INNER SURFACE

BETA (2) = -2.020 ALPHA (3) = 4.120 Q(PSF) = 42.842 PO = 2117.8 RUN NO = 63.000

SECTION (1)MAIN LND GR DR-I DEPENDENT VARIABLE C_p

Y/BML	.0760	.3100	.5820	.8530
X/CML				
.050	-.5522	-.0918	-.6545	-.1269
.230	-.1995	-.4586	-.6556	-.1248
.410	-.0591	-.2137	-.0613	-.1087
.590	-.0776	-.0395	-.1005	-.1198
.770	-.0841	-.1037	-.1266	-.0950
.950	-.1005	-.0983	-.1190	-.0852

BETA (2) = -2.030 ALPHA (4) = 6.190 Q(PSF) = 42.842 PO = 2117.8 RUN NO = 63.000

SECTION (1)MAIN LND GR DR-I DEPENDENT VARIABLE C_p

Y/BML	.0760	.3100	.5820	.8530
X/CML				
.050	-.4968	-.0275	-.5576	-.1436
.230	-.1220	-.3838	-.5468	-.0751
.410	-.0221	-.1535	.0050	-.0670
.590	-.0383	-.0036	-.0525	-.0640
.770	-.0449	-.0503	-.0688	-.0297
.950	-.0579	-.0470	-.0633	-.0264

BETA (3) = -1.030 ALPHA (1) = .000 Q(PSF) = 42.870 PO = 2117.8 RUN NO = 64.000

SECTION (1)MAIN LND GR DR-I DEPENDENT VARIABLE C_p

Y/BML	.0760	.3100	.5820	.8530
X/CML				
.050	-.6532	-.2107	-.8191	-.1546
.230	-.3387	-.5794	-.8289	-.1849
.410	-.1348	-.3419	-.1663	-.1788
.590	-.1532	-.1326	-.1977	-.1939
.770	-.1663	-.1955	-.2064	-.2183
.950	-.1814	-.1934	-.2085	-.2151

OA163B MAIN GEAR DOOR INNER SURFACE (RFPF07)

BETA (3) = -1.030 ALPHA (2) = 2.080 Q(PSF) = 42.870 PO = 2117.8 RUN NO = 64.000

SECTION (1)MAIN LND GR DR-I DEPENDENT VARIABLE CP

Y/BML	.0760	.3100	.5820	.8530
X/CML				
.050	-.6008	-.1513	-.7289	-.1609
.230	-.2631	-.5193	-.7398	-.1477
.410	-.0959	-.2739	-.1046	-.1316
.590	-.1122	-.0742	-.1426	-.1437
.770	-.1208	-.1426	-.1567	-.1751
.950	-.1360	-.1437	-.1621	-.1773

BETA (3) = -1.030 ALPHA (3) = 4.120 Q(PSF) = 42.870 PO = 2117.8 RUN NO = 64.000

SECTION (1)MAIN LND GR DR-I DEPENDENT VARIABLE CP

Y/BML	.0760	.3100	.5820	.8530
X/CML				
.050	-.5516	-.0713	-.6357	-.1475
.230	-.1641	-.4392	-.6378	-.1110
.410	-.0582	-.1892	-.0473	-.0948
.590	-.0746	-.0309	-.0953	-.1110
.770	-.0800	-.0866	-.1128	-.0855
.950	-.0942	-.0887	-.0997	-.0833

BETA (3) = -1.040 ALPHA (4) = 6.200 Q(PSF) = 42.870 PO = 2117.8 RUN NO = 64.000

SECTION (1)MAIN LND GR DR-I DEPENDENT VARIABLE CP

Y/BML	.0760	.3100	.5820	.8530
X/CML				
.050	-.4903	-.0156	-.5284	-.1552
.230	-.0896	-.3651	-.2377	-.0621
.410	-.0123	-.1266	-.0384	-.0510
.590	-.0308	-.0395	-.0406	-.0540
.770	-.0384	-.0352	-.0482	-.0199
.950	-.0526	-.0352	-.0450	-.0210

OA163B MAIN GEAR DOOR INNER SURFACE (RFPF07)

BETA (4) = -.010 ALPHA (1) = .000 Q(PSF) = 42.835 PO = 2117.8 RUN NO = 65.000

SECTION (1)MAIN LND GR DR-I DEPENDENT VARIABLE CP

Y/BML	.0760	.3100	.5820	.8530
X/CML				
.050	-.6476	-.1980	-.7910	-.1579
.230	-.3077	-.5716	-.7823	-.1811
.410	-.1296	-.3316	-.1459	-.1669
.590	-.1469	-.1133	-.1817	-.1781
.770	-.1589	-.1860	-.1893	-.2056
.950	-.1719	-.1839	-.1969	-.2012

BETA (4) = -.010 ALPHA (2) = 2.050 Q(PSF) = 42.635 PO = 2117.8 RUN NO = 65.000

SECTION (1)MAIN LND GR DR-I DEPENDENT VARIABLE CP

Y/BML	.0760	.3100	.5820	.8530
X/CML				
.050	-.5972	-.1286	-.7146	-.1681
.230	-.2189	-.4983	-.7005	-.1500
.410	-.0895	-.2460	-.0938	-.1308
.590	-.1090	-.0634	-.1373	-.1469
.770	-.1167	-.1297	-.1504	-.1438
.950	-.1308	-.1341	-.1438	-.1395

BETA (4) = -.010 ALPHA (3) = 4.120 Q(PSF) = 42.835 PO = 2117.8 RUN NO = 65.000

SECTION (1)MAIN LND GR DR-I DEPENDENT VARIABLE CP

Y/BML	.0760	.3100	.5820	.8530
X/CML				
.050	-.5428	-.0515	-.6081	-.1492
.230	-.1321	-.4175	-.2966	-.1057
.410	-.0515	-.1724	-.0504	-.0875
.590	-.0711	-.0286	-.0820	-.1006
.770	-.0744	-.0722	-.1005	-.0787
.950	-.0886	-.0820	-.0896	-.0766

OA163B MAIN GEAR DOOR INNER SURFACE (RFPF07)

BETA (4) = -.010 ALPHA (4) = 6.200 Q(PSF) = 42.835 PO = 2117.8 RUN NO = 65.000

SECTION (1)MAIN LND GR DR-I DEPENDENT VARIABLE CP

Y/BML	.0760	.3100	.5820	.8530
X/CML				
.050	-.4895	.0029	-.5016	-.1526
.230	-.0527	-.3552	-.0254	-.0552
.410	-.0123	-.0921	.0400	-.0400
.590	-.0331	.0050	-.0309	-.0440
.770	-.0375	-.0320	-.0342	-.0112
.950	-.0506	-.0211	-.0353	-.0102

BETA (5) = .980 ALPHA (1) = .000 Q(PSF) = 42.865 PO = 2117.8 RUN NO = 68.000

SECTION (1)MAIN LND GR DR-I DEPENDENT VARIABLE CP

Y/BML	.0760	.3100	.5820	.8530
X/CML				
.050	-.6447	-.1756	-.7830	-.1734
.230	-.2725	-.5424	-.7906	-.1876
.410	-.1233	-.2975	-.1386	-.1592
.590	-.1418	-.1037	-.1647	-.1724
.770	-.1516	-.1734	-.1876	-.1930
.950	-.1658	-.1723	-.1865	-.1941

BETA (5) = .980 ALPHA (2) = 2.080 Q(PSF) = 42.865 PO = 2117.8 RUN NO = 66.000

SECTION (1)MAIN LND GR DR-I DEPENDENT VARIABLE CP

Y/BML	.0760	.3100	.5820	.8530
X/CML				
.050	-.5959	-.1088	-.6070	-.1738
.230	-.1739	-.4842	-.1934	-.1466
.410	-.0849	-.2064	-.0773	-.1204
.590	-.1045	-.0600	-.1153	-.1426
.770	-.1088	-.1099	-.1403	-.1327
.950	-.1262	-.1153	-.1294	-.1348

OA163B MAIN GEAR DOOR INNER SURFACE (RFPF07)

BETA (5) = .980 ALPHA (3) = 4.120 Q(PSF) = 42.865 PO = 2117.8 RUN NO = 66.000

SECTION (1)MAIN LND GR DR-I DEPENDENT VARIABLE CP

Y/BML	.0760	.3100	.5820	.8530
X/CML				
.050	-.5432	-.0472	-.5847	-.1777
.230	-.0919	-.4190	-.0941	-.1027
.410	-.0461	-.0243	-.0516	-.0754
.590	-.0668	-.0723	-.0734	-.0896
.770	-.0701	-.0701	-.0832	-.0690
.950	-.0843	-.0581	-.0788	-.0548

BETA (5) = .990 ALPHA (4) = 6.200 Q(PSF) = 42.865 PO = 2117.8 RUN NO = 66.000

SECTION (1)MAIN LND GR DR-I DEPENDENT VARIABLE CP

Y/BML	.0760	.3100	.5820	.8530
X/CML				
.050	-.4887	.0083	-.4854	-.1510
.230	-.0188	-.3397	.0507	-.0509
.410	-.0014	-.0601	-.0156	-.0287
.590	-.0232	-.0232	-.0188	-.0317
.770	-.0286	-.0221	-.0221	-.0014
.950	-.0460	-.0156	-.0210	.0115

BETA (6) = 1.980 ALPHA (1) = .010 Q(PSF) = 42.770 PO = 2117.8 RUN NO = 67.000

SECTION (1)MAIN LND GR DR-I DEPENDENT VARIABLE CP

Y/BML	.0760	.3100	.5820	.8530
X/CML				
.050	-.6410	-.1515	-.7596	-.1986
.230	-.2179	-.5388	-.7607	-.1864
.410	-.1145	-.2581	-.1243	-.1510
.590	-.1352	-.0884	-.1[illegible]2	-.1652
.770	-.1428	-.1581	-.1787	-.1766
.950	-.1559	-.1602	-.1820	-.1755

DATE 27 APR 77 OA163B PRESSURE DATA LISTING

OA163B MAIN GEAR DOOR INNER SURFACE (RFPF07)

BETA (6) = 1.980 ALPHA (2) = 2.080 Q(PSF) = 42.770 PO = 2117.8 RUN NO = 67.000

SECTION (1)MAIN LND GR DR-I DEPENDENT VARIABLE CP

Y/BML	.0760	.3100	.5820	.8530
X/CML				
.050	-.5932	-.0788	-.6630	-.1767
.230	-.1387	-.4733	-.3774	-.1361
.410	-.0777	-.1932	-.0646	-.1108
.590	-.0951	-.1082	-.1137	-.1311
.770	-.0995	-.1071	-.1300	-.1202
.950	-.1148	-.0984	-.1191	-.1191

BETA (6) = 1.980 ALPHA (3) = 4.120 Q(PSF) = 42.770 PO = 2117.8 RUN NO = 67.000

SECTION (1)MAIN LND GR DR-I DEPENDENT VARIABLE CP

Y/BML	.0760	.3100	.5820	.8530
X/CML				
.050	-.5489	-.0363	-.5598	-.1930
.230	-.0614	-.4093	-.0450	-.0987
.410	-.0429	-.1170	-.0058	-.0683
.590	-.0592	-.0298	-.0647	-.0774
.770	-.0614	-.0669	-.0745	-.0549
.950	-.0789	-.0536	-.0690	-.0418

BETA (6) = 1.980 ALPHA (4) = 6.200 Q(PSF) = 42.770 PO = 2117.8 RUN NO = 67.000

SECTION (1)MAIN LND GR DR-I DEPENDENT VARIABLE CP

Y/BML	.0760	.3100	.5820	.8530
X/CML				
.050	-.5050	.0269	-.4668	-.1740
.230	-.0025	-.3412	-.0003	-.0461
.410	-.0003	.0192	.0181	-.0207
.590	-.0156	-.0189	-.0134	-.0227
.770	-.0233	-.0211	-.0156	.0061
.950	-.0429	-.0091	-.0069	.0247

OA163B MAIN GEAR DOOR INNER SURFACE (RFPF08) (27 APR 77)

REFERENCE DATA

SREF = 2690.0000 SQ.FT. XMRP = 1076.7000 IN. XO
LREF = 474.8100 INCHES YMRP = .0000 IN. YO
BREF = 936.6800 INCHES ZMRP = 375.0000 IN. ZO
SCALE = .0405

PARAMETRIC DATA

SPDBRK =	25.000	BDFLAP =	.000
ELV-L =	.000	ELV-R =	.000
PHI-N =	66.000	THETAN =	108.000
PHI-ML =	32.200	THETML =	5.000
PHI-MR =	32.200	THETMR =	5.000

BETA (1) = -5.030 ALPHA (1) = .000 Q(PSF) = 42.787 PO = 2116.4 RUN NO = 68.000

SECTION (1)MAIN LND GR DR-I DEPENDENT VARIABLE CP

Y/BML	.0760	.3100	.5820	.8530
X/CML				
.050	-.2553	-.2532	-.2727	-.3302
.230	-.4203	-.6427	-.8890	-.2727
.410	-.1414	-.4170	-.1946	-.2182
.590	-.1696	-.1457	-.2597	-.2435
.770	-.2032	-.2391	-.2532	-.2684
.950	-.2239	-.2445	-.2380	-.2716

BETA (1) = -5.040 ALPHA (2) = 2.090 Q(PSF) = 42.787 PO = 2116.4 RUN NO = 68.000

SECTION (1)MAIN LND GR DR-I DEPENDENT VARIABLE CP

Y/BML	.0760	.3100	.5820	.8530
X/CML				
.050	-.6637	-.2019	-.2313	-.3548
.230	-.3838	-.5690	-.7977	-.2211
.410	-.1180	-.3707	-.1408	-.1695
.590	-.1332	-.0896	-.2029	-.1887
.770	-.1583	-.1844	-.2008	-.2193
.950	-.1768	-.1920	-.1986	-.2182

BETA (1) = -5.030 ALPHA (3) = 4.130 Q(PSF) = 42.787 PO = 2116.4 RUN NO = 68.000

SECTION (1)MAIN LND GR DR-I DEPENDENT VARIABLE CP

Y/BML	.0760	.3100	.5820	.8530
X/CML				
.050	-.6121	-.1500	-.7246	-.2837
.230	-.3237	-.4941	-.7192	-.1314
.410	-.0855	-.3128	-.0702	-.1212
.590	-.0964	-.0506	-.1445	-.1415
.770	-.1150	-.1205	-.1478	-.1620
.950	-.1336	-.1358	-.1533	-.1544

OA163B MAIN GEAR DOOR INNER SURFACE (RFPF08)

BETA (1) = -5.030 ALPHA (4) = 6.210 Q(PSF) = 42.787 PO = 2116.4 RUN NO = 68.000

SECTION (1)MAIN LND GR DR-I DEPENDENT VARIABLE CP

Y/BML	.0760	.3100	.5820	.8530
X/CML				
.050	-.5508	-.0648	-.6317	-.3293
.230	-.2319	-.4252	-.6262	-.1141
.410	-.0418	-.2100	-.0036	-.0786
.590	-.0484	-.0080	-.0735	-.0938
.770	-.0604	-.0790	-.1041	-.0659
.950	-.0801	-.0746	-.0921	-.0670

BETA (2) = -2.020 ALPHA (1) = .000 Q(PSF) = 42.880 PO = 2116.5 RUN NO = 69.000

SECTION (1)MAIN LND GR DR-I DEPENDENT VARIABLE CP

Y/BML	.0760	.3100	.5820	.8530
X/CML				
.050	-.7100	-.2289	-.5413	-.3544
.230	-.3802	-.5848	-.8264	-.2017
.410	-.1462	-.3736	-.1440	-.1865
.590	-.1571	-.1146	-.2093	-.2027
.770	-.1734	-.1897	-.2104	-.2300
.950	-.1908	-.2115	-.2321	-.2332

BETA (2) = -2.020 ALPHA (2) = 2.060 Q(PSF) = 42.880 PO = 2115.5 RUN NO = 69.000

SECTION (1)MAIN LND GR DR-I DEPENDENT VARIABLE CP

Y/BML	.0760	.3100	.5820	.8530
X/CML				
.050	-.6600	-.1655	-.7502	-.3438
.230	-.2894	-.5220	-.7372	-.1691
.410	-.1047	-.2905	-.0786	-.1388
.590	-.1155	-.0721	-.1579	-.1539
.770	-.1307	-.1536	-.1644	-.1873
.950	-.1492	-.1525	-.1764	-.1840

OA163B MAIN GEAR DOOR INNER SURFACE (RFPF08)

BETA (2) = -2.020 ALPHA (3) = 4.120 Q(PSF) = 42.880 PO = 2116.5 RUN NO = 69.000

SECTION (1)MAIN LND GR DR-I DEPENDENT VARIABLE CP

Y/BML	.0760	.3100	.5820	.8530
X/CML				
.050	-.5973	-.0882	-.6570	-.3484
.230	-.1903	-.4508	-.6548	-.1245
.410	-.0611	-.2131	-.0231	-.0972
.590	-.0730	-.0372	-.0937	-.1204
.770	-.0861	-.0948	-.1295	-.1045
.950	-.1056	-.0926	-.1165	-.0980

BETA (2) = -2.020 ALPHA (4) = 6.200 Q(PSF) = 42.880 PO = 2116.5 RUN NO = 68.000

SECTION (1)MAIN LND GR DR-I DEPENDENT VARIABLE CP

Y/BML	.0760	.3100	.5820	.8530
X/CML				
.050	-.5307	-.0221	-.5503	-.5207
.230	-.1016	-.3946	-.1136	-.0773
.410	-.0167	-.1354	.0344	-.0520
.590	-.0330	-.0123	-.0406	-.0601
.770	-.0406	-.0428	-.0591	-.0276
.950	-.0635	-.0461	-.0570	-.0395

BETA (3) = -1.020 ALPHA (1) = .000 Q(PSF) = 42.887 PO = 2116.4 RUN NO = 70.000

SECTION (1)MAIN LND GR DR-I DEPENDENT VARIABLE CP

Y/BML	.0760	.3100	.5820	.8530
X/CML				
.050	-.1963	-.2159	-.2366	-.3485
.230	-.3389	-.5763	-.8126	-.2018
.410	-.1364	-.3651	-.1223	-.1745
.590	-.1495	-.1092	-.1985	-.1866
.770	-.1636	-.1745	-.1909	-.2235
.950	-.1832	-.1898	-.2170	-.2224

OA163B MAIN GE/R DOOR INNER SURFACE (RFPF08)

BETA (3) = -1.010 ALPHA (2) = 2.070 Q(PSF) = 42.887 PO = 2116.4 RUN NO = 70.000

SECTION (1)MAIN LND GR DR-I DEPENDENT VARIABLE CP

Y/BML	.0760	.3100	.5820	.8530
X/CML				
.050	-.6476	-.1393	-.7160	-.2911
.230	-.2425	-.5162	-.7302	-.1730
.410	-.0959	-.2762	-.0579	-.1316
.590	-.1089	-.0677	-.1383	-.1548
.770	-.1198	-.1263	-.1697	-.1589
.950	-.1404	-.1350	-.1654	-.1578

BETA (3) = -1.020 ALPHA (3) = 4.140 Q(PSF) = 42.887 PO = 2116.4 RUN NO = 70.000

SECTION (1)MAIN LND GR DR-I DEPENDENT VARIABLE CP

Y/BML	.0760	.3100	.5820	.8530
X/CML				
.050	-.5894	-.0667	-.6122	-.4285
.230	-.1484	-.4511	-.6373	-.1198
.410	-.0526	-.2039	-.0036	-.0905
.590	-.0700	-.0439	-.0842	-.1087
.770	-.0776	-.0831	-.1016	-.0895
.950	-.0983	-.0831	-.1048	-.0874

BETA (3) = -1.020 ALPHA (4) = 6.210 Q(PSF) = 42.887 PO = 2116.4 RUN NO = 70.000

SECTION (1)MAIN LND GR DR-I DEPENDENT VARIABLE CP

Y/BML	.0760	.3100	.5820	.8530
X/CML				
.050	-.5234	-.0112	-.5158	-.5380
.230	-.0654	-.3748	-.5256	-.0710
.410	-.0101	-.1316	.0473	-.0418
.590	-.0253	-.0025	-.0209	-.0448
.770	-.0361	-.0361	-.0394	-.0166
.950	-.0578	-.0340	-.0383	-.0166

OA163B MAIN GE/R DOOR INNER SURFACE (RFPF08)

BETA (4) = .010 ALPHA (1) = -.010 Q(PSF) = 42.855 PO = 2116.4 RUN NO = 71.000

SECTION ( )MAIN LND GR DR-I DEPENDENT VARIABLE CP

Y/BML	.0760	.3100	.5820	.8530
X/CML				
.050	-.7004	-.1917	-.2058	-.3247
.230	-.2960	-.5657	-.7896	-.2096
.410	-.1286	-.3471	-.1047	-.1631
.590	-.1438	-.1047	-.1819	-.1772
.770	-.1569	-.1645	-.1927	-.2112
.950	-.1754	-.1797	-.2091	-.2101

BETA (4) = .000 ALPHA (2) = 2.050 Q(PSF) = 42.855 PO = 2116.4 RUN NO = 71.000

SECTION (1)MAIN LND GR DR-I DEPENDENT VARIABLE CP

Y/BML	.0760	.3100	.5820	.8530
X/CML				
.050	-.6417	-.1166	-.5189	-.2934
.230	-.2004	-.4982	-.6939	-.1621
.410	-.0862	-.2460	-.0492	-.1227
.590	-.1036	-.0677	-.1253	-.1520
.770	-.1134	-.1166	-.1536	-.1482
.950	-.1340	-.1253	-.1438	-.1460

BETA (4) = .010 ALPHA (3) = 4.120 Q(PSF) = 42.855 PO = 2116.4 RUN NO = 71.000

SECTION (1)MAIN LND GR DR-I DEPENDENT VARIABLE CP

Y/BML	.0760	.3100	.5820	.8530
X/CML				
.050	-.5060	-.0548	-.5370	-.5022
.230	-.1157	-.4390	-.5947	-.1188
.410	-.0504	-.1658	.0050	-.0823
.590	-.0656	-.0362	-.0722	-.0955
.770	-.0733	-.0765	-.0929	-.0754
.950	-.0961	-.0776	-.0896	-.0733

DATE 27 APR 77 OA163B PRESSURE DATA LISTING (RFPF08)

OA163B MAIN GEAR DOOR INNER SURFACE

BETA (4) = .010 ALPHA (4) = 6.200 Q(PSF) = 42.855 PO = 2116.4 RUN NO = 71.000

SECTION (1)MAIN LND GR DR-I DEPENDENT VARIABLE CP

Y/BML	.0760	.3100	.5820	.8530
X/CML				
.050	-.5135	.0007	-.4884	-.5573
.230	-.0363	-.3599	-.4895	-.0733
.410	-.0058	-.0864	.0530	-.0308
.590	-.0199	.0061	-.0080	-.0338
.770	-.0319	-.0276	-.0363	-.0101
.950	-.0548	-.0254	-.0254	-.0134

BETA (5) = 1.000 ALPHA (1) = .000 Q(PSF) = 42.827 PO = 2116.5 RUN NO = 72.000

SECTION (1)MAIN LND GR DR-I DEPENDENT VARIABLE CP

Y/BML	.0760	.3100	.5820	.8530
X/CML				
.050	-.6917	-.1767	-.6057	-.2928
.230	-.2540	-.5523	-.7559	-.2109
.410	-.1168	-.2943	-.0852	-.1552
.590	-.1364	-.1005	-.1702	-.1734
.770	-.1484	-.1495	-.1898	-.1919
.950	-.1680	-.1604	-.1865	-.1898

BETA (5) = 1.000 ALPHA (2) = 2.060 Q(PSF) = 42.827 PO = 2116.5 RUN NO = 72.000

SECTION (1)MAIN LND GR DR-I DEPENDENT VARIABLE CP

Y/BML	.0760	.3100	.5820	.8530
X/CML				
.050	-.6377	-.1018	-.6410	-.3331
.230	-.1597	-.4936	-.6716	-.1505
.410	-.0822	-.2121	-.0352	-.1191
.590	-.0998	-.0680	-.1204	-.1414
.770	-.1084	-.1116	-.1389	-.1368
.950	-.1291	-.1149	-.1335	-.1368

OA163B MAIN GEAR DOOR INNER SURFACE (RFPF08)

BETA (5) = 1.000 ALPHA (3) = 4.140 Q(PSF) = 42.827 PO = 2116.5 RUN NO = 72.000

SECTION (1)MAIN LND GR DR-I DEPENDENT VARIABLE CP

Y/BML	.0760	.3100	.5820	.8530
X/CML				
.050	-.5762	-.0471	-.5729	-.4547
.230	-.0798	-.4259	-.5729	-.1147
.410	-.0428	-.1451	.0126	-.0753
.590	-.0602	-.0275	-.0602	-.0823
.770	-.0656	-.0656	-.0798	-.0635
.950	-.0907	-.0700	-.0711	-.0667

BETA (5) = 1.000 ALPHA (4) = 6.200 Q(PSF) = 42.827 PO = 2116.5 RUN NO = 72.000

SECTION (1)MAIN LND GR DR-I DEPENDENT VARIABLE CP

Y/BML	.0760	.3100	.5820	.8530
X/CML				
.050	-.5120	.0104	-.4761	-.6173
.230	-.0079	-.3588	-.4729	-.0721
.410	-.0003	-.0764	.0572	-.0226
.590	-.0166	.0137	.0104	-.0226
.770	-.0253	-.0220	-.0275	-.0014
.950	-.0536	-.0210	-.0155	.0007

BETA (6) = 1.990 ALPHA (1) = .000 Q(PSF) = 42.890 PO = 2116.5 RUN NO = 73.000

SECTION (1)MAIN LND GR DR-I DEPENDENT VARIABLE CP

Y/BML	.0760	.3100	.5820	.8530
X/CML				
.050	-.6852	-.1545	-.5170	-.2566
.230	-.2087	-.5441	-.7395	-.1860
.410	-.1121	-.2619	-.0752	-.1507
.590	-.1327	-.0926	-.1555	-.1719
.770	-.1414	-.1414	-.1794	-.1838
.950	-.1631	-.1523	-.1783	-.1859

OA163B MAIN GEAR DOOR INNER SURFACE (RFPF08)

BETA (6) = 1.990 ALPHA (2) = 2.070 Q(PSF) = 42.890 PO = 2116.5 RUN NO = 73.000

SECTION (1)MAIN LND GR DR-I DEPENDENT VARIABLE CP

Y/BML	.0760	.3100	.5820	.8530
X/CML				
.050	-.6177	-.0809	-.6384	-.3920
.230	-.1255	-.4718	-.6329	-.1421
.410	-.0755	-.1876	-.0188	-.1056
.590	-.0929	-.0646	-.0961	-.1279
.770	-.0994	-.0994	-.1277	-.1223
.950	-.1201	-.0994	-.1157	-.1168

BETA (6) = 1.980 ALPHA (3) = 4.130 Q(PSF) = 42.890 PO = 2116.5 RUN NO = 73.000

SECTION (1)MAIN LND GR DR-I DEPENDENT VARIABLE CP

Y/BML	.0760	.3100	.5820	.8530
X/CML				
.050	-.5707	-.0275	-.5490	-.4790
.230	-.0503	-.4077	-.5533	-.1155
.410	-.0362	-.1111	.0180	-.0620
.590	-.0514	-.0297	-.0427	-.0691
.770	-.0612	-.0568	-.0709	-.0514
.950	-.0840	-.0536	-.0568	-.0546

BETA (6) = 1.980 ALPHA (4) = 6.200 Q(PSF) = 42.890 PO = 2116.5 RUN NO = 73.000

SECTION (1)MAIN LND GR DR-I DEPENDENT VARIABLE CP

Y/BML	.0760	.3100	.5820	.8530
X/CML				
.050	-.5204	.0257	-.4486	-.6325
.230	.0061	-.3507	-.4497	-.0722
.410	.0061	-.0547	.0594	-.0216
.590	-.0090	.0246	.0213	-.0125
.770	-.0232	-.0101	-.0134	.0094
.950	-.0515	-.0134	-.0156	.0072

OA163B MAIN GEAR DOOR INNER SURFACE (RFPF08)

BETA (7) = 5.010 ALPHA (1) = .030 Q(PSF) = 42.820 PO = 2116.5 RUN NO = 74.000

SECTION (1)MAIN LND GR DR-I DEPENDENT VARIABLE CP

Y/BML	.0760	.3100	.5820	.8530
X/CML				
.050	-.6891	-.0959	-.6728	-.3518
.230	-.1144	-.5272	-.6576	-.1640
.410	-.1057	-.1655	-.0633	-.1286
.590	-.1198	-.0905	-.1198	-.1498
.770	-.1231	-.1220	-.1535	-.1426
.950	-.1426	-.1231	-.1361	-.1394

BETA (7) = 5.020 ALPHA (2) = 2.060 Q(PSF) = 42.820 PO = 2116.5 RUN NO = 74.000

SECTION (1)MAIN LND GR DR-I DEPENDENT VARIABLE CP

Y/BML	.0760	.3100	.5820	.8530
X/CML				
.050	-.6813	-.0438	-.4065	-.5505
.230	-.0698	-.5195	-.0264	-.1427
.410	-.0763	-.0546	-.0709	-.0842
.590	-.0850	-.0883	-.0731	-.1034
.770	-.0894	-.0883	-.0818	-.0839
.950	-.1122	-.0818	-.0839	-.0525

BETA (7) = 5.020 ALPHA (3) = 4.120 Q(PSF) = 42.820 PO = 2116.5 RUN NO = 74.000

SECTION (1)MAIN LND GR DR-I DEPENDENT VARIABLE CP

Y/BML	.0760	.3100	.5820	.8530
X/CML				
.050	-.6147	-.0069	-.4564	-.6586
.230	-.0385	-.4870	-.0407	-.1038
.410	-.0418	-.0232	-.0287	-.0369
.590	-.0483	-.0472	-.0342	-.0471
.770	-.0549	-.0462	-.0320	-.0298
.950	-.0800	-.0483	-.0309	-.0134

OA163B MAIN GEAR DOOR INNER SURFACE (RFPF08)

BETA (7) = 5.010 ALPHA (4) = 6.200 Q(PSF) = 42.820 PO = 2116.5 RUN NO = 74.000

SECTION (1)MAIN LND GR DR-I DEPENDENT VARIABLE CP

Y/BML	.0760	.3100	.5820	.8530
X/CML				
.050	-.6020	.0323	-.2678	-.4185
.230	-.0003	.0149	-.0211	-.0349
.410	.0050	.0203	.0127	-.0085
.590	-.0058	-.0014	.0061	.0036
.770	-.0222	.0050	.0181	.0345
.950	-.0506	-.0200	.0214	.0411

DATE 27 APR 77 OA163B PRESSURE DATA LISTING (RFPF09) (27 APR 77)

OA163B MAIN GEAR DOOR INNER SURFACE

REFERENCE DATA

SREF =	2690.0000 SQ.FT.	XMRP =	1076.7000 IN. XO		
LREF =	474.8100 INCHES	YMRP =	.0000 IN. YO		
BREF =	936.6800 INCHES	ZMRP =	375.0000 IN. ZO		
SCALE =	.0405				

PARAMETRIC DATA

SPDBRK =	25.000	BDFLAP =	.000
ELV-L =	.000	ELV-R =	.000
PHI-N =	66.000	THETAN =	109.000
PHI-ML =	32.200	THETML =	8.000
PHI-MR =	36.000	THETMR =	5.800

BETA (1) = -5.030 ALPHA (1) = .000 Q(PSF) = 42.795 PO = 2113.0 RUN NO = 75.000

SECTION (1)MAIN LND GR DR-I DEPENDENT VARIABLE CP

Y/BML	.0760	.3100	.5820	.8530
X/CML				
.050	-.6824	-.2567	-.2827	-.3315
.230	-.4261	-.6336	-.8812	-.2750
.410	-.1470	-.4380	-.1969	-.2225
.590	-.1730	-.1459	-.2610	-.2447
.770	-.2089	-.2469	-.2545	-.2730
.950	-.2273	-.2491	-.2469	-.2719

BETA (1) = -5.030 ALPHA (2) = 2.080 Q(PSF) = 42.795 PO = 2113.0 RUN NO = 75.000

SECTION (1)MAIN LND GR DR-I DEPENDENT VARIABLE CP

Y/BML	.0760	.3100	.5820	.8530
X/CML				
.050	-.6590	-.2039	-.6895	-.3566
.230	-.3836	-.5730	-.8245	-.2180
.410	-.1157	-.3759	-.1353	-.1704
.590	-.1321	-.0961	-.2061	-.1937
.770	-.1604	-.1734	-.1974	-.2192
.950	-.1789	-.1963	-.2072	-.2192

BETA (1) = -5.040 ALPHA (3) = 4.130 Q(PSF) = 42.795 PO = 2113.0 RUN NO = 75.000

SECTION (1)MAIN LND GR DR-I DEPENDENT VARIABLE CP

Y/BML	.0760	.3100	.5820	.8530
X/CML				
.050	-.6093	-.1485	-.7194	-.2890
.230	-.3217	-.4830	-.7139	-.1290
.410	-.0853	-.3185	-.0733	-.1219
.590	-.0908	-.0515	-.1430	-.1401
.770	-.1115	-.1376	-.1387	-.1594
.950	-.1300	-.1354	-.1539	-.1637

OA163B MAIN GEAR DOOR INNER SURFACE (RFPF09)

BETA (1) = -5.030 ALPHA (4) = 6.220 Q(PSF) = 42.795 PO = 2113.0 RUN NO = 75.000

SECTION (1)MAIN LND GR DR-I DEPENDENT VARIABLE CP

Y/BML	.0760	.3100	.5820	.8530
X/CML				
.050	-.5561	-.0692	-.6349	-.3298
.230	-.2279	-.4248	-.0933	-.1153
.410	-.0397	-.2126	.0018	-.0736
.590	-.0485	-.0069	-.0660	-.0939
.770	-.0583	-.0769	-.1032	-.0638
.950	-.0769	-.0758	-.0933	-.0769

BETA (2) = -2.010 ALPHA (1) = .000 Q(PSF) = 42.930 PO = 2113.0 RUN NO = 76.000

SECTION (1)MAIN LND GR DR-I DEPENDENT VARIABLE CP

Y/BML	.0760	.3100	.5820	.8530
X/CML				
.050	-.7110	-.2253	-.8278	-.3563
.230	-.3724	-.5823	-.8354	-.2005
.410	-.1453	-.3768	-.1420	-.1864
.590	-.1561	-.1193	-.2102	-.1995
.770	-.1745	-.2004	-.2026	-.2318
.950	-.1907	-.2026	-.2275	-.2264

BETA (2) = -2.010 ALPHA (2) = 2.080 Q(PSF) = 42.930 PO = 2113.0 RUN NO = 76.000

SECTION (1)MAIN LND GR DR-I DEPENDENT VARIABLE CP

Y/BML	.0760	.3100	.5820	.8530
X/CML				
.050	-.6570	-.1667	-.7462	-.3359
.230	-.2852	-.5287	-.7375	-.1692
.410	-.1036	-.3069	-.0808	-.1378
.590	-.1156	-.0808	-.1569	-.1510
.770	-.1308	-.1515	-.1645	-.1884
.950	-.1504	-.1525	-.1743	-.1808

OA163B MAIN GEAR DOOR INNER SURFACE (RFPF09)

BETA (2) = -2.010 ALPHA (3) = 4.140 Q(PSF) = 42.930 PO = 2113.0 RUN NO = 76.000

SECTION (1)MAIN LND GR DR-I DEPENDENT VARIABLE CP

Y/BML	.0760	.3100	.5820	.8530
X/CML				
.050	-.6002	-.0896	-.6514	-.3333
.230	-.1941	-.4565	-.6525	-.1238
.410	-.0602	-.2202	-.0188	-.1006
.590	-.0744	-.0406	-.0907	-.1228
.770	-.0831	-.0874	-.1190	-.1027
.950	-.1048	-.0983	-.1103	-.1005

BETA (2) = -2.010 ALPHA (4) = 6.200 Q(PSF) = 42.930 PO = 2113.0 RUN NO = 76.000

SECTION (1)MAIN LND GR DR-I DEPENDENT VARIABLE CP

Y/BML	.0760	.3100	.5820	.8530
X/CML				
.050	-.5276	-.0253	-.5537	-.5107
.230	-.1047	-.3928	-.5559	-.0792
.410	-.0177	-.1514	.0344	-.0529
.590	-.0340	-.0036	-.0340	-.0550
.770	-.0449	-.0395	-.0612	-.0286
.950	-.0612	-.0427	-.0547	-.0297

BETA (3) = -1.020 ALPHA (1) = .000 Q(PSF) = 42.845 PO = 2112.9 RUN NO = 77.000

SECTION (1)MAIN LND GR DR-I DEPENDENT VARIABLE CP

Y/BML	.0760	.3100	.5820	.8530
X/CML				
.050	-.7133	-.2162	-.7395	-.3449
.230	-.3328	-.5803	-.8147	-.2020
.410	-.1377	-.3644	-.1235	-.1747
.590	-.1519	-.1083	-.1998	-.1878
.770	-.1660	-.1944	-.1889	-.2216
.950	-.1857	-.1976	-.2184	-.2227

OA163B MAIN GEAR DOOR INNER SURFACE (RFPF09)

BETA (3) = -1.020 ALPHA (2) = 2.060 Q(PSF) = 42.845 PO = 2112.9 RUN NO = 77.000

SECTION (1)MAIN LND GR DR-I DEPENDENT VARIABLE CP

Y/BML	.0760	.3100	.5820	.8530
X/CML				
.050	-.6556	-.1451	-.7274	-.2897
.230	-.2441	-.5141	-.7252	-.1754
.410	-.0972	-.2790	-.0645	-.1339
.590	-.1113	-.0798	-.1418	-.1542
.770	-.1222	-.1255	-.1701	-.1614
.950	-.1407	-.1396	-.1625	-.1582

BETA (3) = -1.020 ALPHA (3) = 4.140 Q(PSF) = 42.845 PO = 2112.9 RUN NO = 77.000

SECTION (1)MAIN LND GR DR-I DEPENDENT VARIABLE CP

Y/BML	.0760	.3100	.5820	.8530
X/CML				
.050	-.5881	-.0742	-.6283	-.4386
.230	-.1503	-.4458	-.6305	-.1206
.410	-.0525	-.1894	-.0047	-.0903
.590	-.0677	-.0351	-.0872	-.1074
.770	-.0796	-.0851	-.1101	-.0872
.950	-.0981	-.0840	-.0992	-.0883

BETA (3) = -1.020 ALPHA (4) = 6.210 Q(PSF) = 42.845 PO = 2112.9 RUN NO = 77.000

SECTION (1)MAIN LND GR DR-I DEPENDENT VARIABLE CP

Y/BML	.0760	.3100	.5820	.8530
X/CML				
.050	-.5194	-.0134	-.5248	-.5415
.230	-.0678	-.3779	-.0384	-.0722
.410	-.0079	-.1189	.0507	-.0419
.590	-.0264	-.0047	-.0156	-.0479
.770	-.0351	-.0308	-.0504	-.0166
.950	-.0558	-.0362	-.0373	-.0188

OA163B MAIN GEAR DOOR INNER SURFACE (RFPF09)

BETA (4) = .000 ALPHA (1) = .000 Q(PSF) = 42.915 PO = 2112.9 RUN NO = 78.000

SECTION (1)MAIN LND GR DR-I DEPENDENT VARIABLE CP

Y/BML	.0760	.3100	.5820	.8530
X/CML				
.050	-.7002	-.1902	-.7523	-.3221
.230	-.2900	-.5678	-.7924	-.2051
.410	-.1284	-.3443	-.1034	-.1648
.590	-.1446	-.1012	-.1783	-.1759
.770	-.1555	-.1815	-.1870	-.2108
.950	-.1739	-.1804	-.2087	-.2076

BETA (4) = .000 ALPHA (2) = 2.090 Q(PSF) = 42.915 PO = 2112.9 RUN NO = 78.000

SECTION (1)MAIN LND GR DR-I DEPENDENT VARIABLE CP

Y/BML	.0760	.3100	.5820	.8530
X/CML				
.050	-.6473	-.1158	-.6908	-.3162
.230	-.1985	-.5057	-.6897	-.1654
.410	-.0853	-.2465	-.0461	-.1269
.590	-.1049	-.0755	-.1245	-.1492
.770	-.1136	-.1256	-.1604	-.1463
.950	-.1332	-.1234	-.1474	-.1484

BETA (4) = .000 ALPHA (3) = 4.140 Q(PSF) = 42.915 PO = 2112.9 RUN NO = 78.000

SECTION (1)MAIN LND GR DR-I DEPENDENT VARIABLE CP

Y/BML	.0760	.3100	.5820	.8539
X/CML				
.050	-.5821	-.0589	-.5962	-.4947
.230	-.1143	-.4301	-.5864	-.1184
.410	-.0492	-.1729	.0083	-.0851
.590	-.0665	-.0383	-.0665	-.0952
.770	-.0730	-.0687	-.0937	-.0720
.950	-.0937	-.0730	-.0904	-.0709

OA163B MAIN GEAR DOOR INNER SURFACE (RFPF09)

BETA (4) = .000 ALPHA (4) = 6.210 Q(PSF) = 42.915 PO = 2112.9 RUN NO = 78.000

SECTION (1)MAIN LND GR DR-I DEPENDENT VARIABLE CP

Y/BML	.0760	.3100	.5820	.8530
X/CML				
.050	-.5153	-.3686	-.4946	-.5729
.230	-.0307	-.3675	.0550	-.0731
.410	-.0036	-.0916	-.0068	-.0307
.590	-.0221	-.0264	-.0068	-.0307
.770	-.0307	-.0307	-.0264	-.0112
.950	-.0557	-.0297	-.0253	-.0112

BETA (5) = 1.000 ALPHA (1) = -.010 Q(PSF) = 42.792 PO = 2112.9 RUN NO = 79.000

SECTION (1)MAIN LND GR DR-I DEPENDENT VARIABLE CP

Y/BML	.0760	.3100	.5820	.8530
X/CML				
.050	-.6915	-.1729	-.7642	-.2797
.230	-.2488	-.5418	-.7642	-.2122
.410	-.1219	-.2987	-.0915	-.1547
.590	-.1403	-.0980	-.1642	-.1718
.770	-.1490	-.1663	-.1924	-.1946
.950	-.1707	-.1663	-.1924	-.1946

BETA (5) = 1.000 ALPHA (2) = 2.070 Q(PSF) = 42.792 PO = 2112.9 RUN NO = 79.000

SECTION (1)MAIN LND GR DR-I DEPENDENT VARIABLE CP

Y/BML	.0760	.3100	.5820	.8530
X/CML				
.050	-.6353	-.0923	-.6770	-.3352
.230	-.1591	-.4788	-.0365	-.1490
.410	-.0803	-.2193	-.1000	-.1164
.590	-.0945	-.1054	-.1131	-.1398
.770	-.1076	-.1076	-.1427	-.1383
.950	-.1273	-.1120	-.1350	-.1065

OA163B MAIN GEAR DOOR INNER SURFACE (RFPF09)

BETA (5) = 1.000 ALPHA (3) = 4.120 Q(PSF) = 42.792 PO = 2112.9 RUN NO = 79.000

SECTION (1)MAIN LND GR DR-I DEPENDENT VARIABLE CP

Y/BML	.0760	.3100	.5820	.8530
X/CML				
.050	-.5749	-.0352	-.5738	-.4625
.230	-.0810	-.4125	.0148	-.1169
.410	-.0428	-.0287	-.0570	-.0744
.590	-.0581	-.0657	-.0548	-.0825
.770	-.0679	-.0712	-.0723	-.0625
.950	-.0897	-.0668	-.0734	-.0527

BETA (5) = 1.000 ALPHA (4) = 6.190 Q(PSF) = 42.792 PO = 2112.9 RUN NO = 79.000

SECTION (1)MAIN LND GR DR-I DEPENDENT VARIABLE CP

Y/BML	.0760	.3100	.5820	.8530
X/CML				
.050	-.5163	.0105	-.4738	-.6175
.230	-.0090	-.3475	.0551	-.0732
.410	.0018	-.0733	.0072	-.0227
.590	-.0145	.0148	.0050	-.0227
.770	-.0254	-.0167	-.0275	-.0014
.950	-.0537	-.0264	-.0177	.0028

BETA (6) = 1.990 ALPHA (1) = .000 Q(PSF) = 42.855 PO = 2112.9 RUN NO = 80.000

SECTION (1)MAIN LND GR DR-I DEPENDENT VARIABLE CP

Y/BML	.0760	.3100	.5820	.8530
X/CML				
.050	-.6848	-.1457	-.7434	-.2565
.230	-.2108	-.5373	-.7456	-.1849
.410	-.1121	-.2791	-.0730	-.1496
.590	-.1316	-.0904	-.1457	-.1678
.770	-.1413	-.1435	-.1826	-.1858
.950	-.1609	-.1544	-.1728	-.1858

OA163B MAIN GEAR DOOR INNER SURFACE (RFPF09)

BETA (6) = 1.990 ALPHA (2) = 2.060 Q(PSF) = 42.855 PO = 2112.9 RUN NO = 80.000

SECTION (1)MAIN LND GR DR-I DEPENDENT VARIABLE CP

Y/BML	.0760	.3100	.5820	.8530
X/CML				
.050	-.6244	-.0798	-.6429	-.4023
.230	-.1267	-.4654	-.1049	-.1391
.410	-.0755	-.1877	-.0646	-.1067
.590	-.0940	-.0646	-.1016	-.1290
.770	-.0994	-.1027	-.1267	-.1234
.950	-.1212	-.1060	-.1180	-.0962

BETA (6) = 1.990 ALPHA (3) = 4.120 Q(PSF) = 42.855 PO = 2112.9 RUN NO = 80.000

SECTION (1)MAIN LND GR DR-I DEPENDENT VARIABLE CP

Y/BML	.0760	.3100	.5820	.8530
X/CML				
.050	-.5711	-.0265	-.5515	-.4702
.230	-.0483	-.3979	-.0820	-.1168
.410	-.0363	-.1169	-.0265	-.0652
.590	-.0515	-.0308	-.0461	-.0703
.770	-.0613	-.0515	-.0635	-.0493
.950	-.0842	-.0526	-.0581	-.0363

BETA (6) = 1.990 ALPHA (4) = 6.210 Q(PSF) = 42.855 PO = 2112.9 RUN NO = 80.000

SECTION (1)MAIN LND GR DR-I DEPENDENT VARIABLE CP

Y/BML	.0760	.3100	.5820	.8530
X/CML				
.050	-.5186	.0257	-.4468	-.6461
.230	.0039	-.3444	.0562	-.0723
.410	.0050	-.0537	.0159	-.0196
.590	-.0101	-.0079	.0181	-.0115
.770	-.0243	-.0069	-.0112	.0105
.950	-.0515	-.0221	-.0036	.0126

OA163B MAIN GEAR DOOR INNER SURFACE (RFPF09)

BETA (7) = 5.020 ALPHA (1) = .000 Q(PSF) = 42.877 PO = 2113.0 RUN NO = 81.000

SECTION (1)MAIN LND GR DR-I DEPENDENT VARIABLE CP

Y/BML	.0760	.3100	.5820	.8530
X/CML				
.050	-.6873	-.0944	-.6743	-.3423
.230	-.1118	-.5185	-.2221	-.1663
.410	-.1053	-.1561	-.0598	-.1271
.590	-.1172	-.0912	-.1182	-.1492
.770	-.1215	-.1204	-.1442	-.1442
.950	-.1442	-.1172	-.1334	-.1182

BETA (7) = 5.020 ALPHA (2) = 2.060 Q(PSF) = 42.877 PO = 2113.0 RUN NO = 81.000

SECTION (1)MAIN LND GR DR-I DEPENDENT VARIABLE CP

Y/BML	.0760	.3100	.5820	.8530
X/CML				
.050	-.6862	-.0482	-.5578	-.5569
.230	-.0711	-.4990	-.0210	-.1390
.410	-.0744	-.0733	-.0722	-.0864
.590	-.0842	-.0874	-.0754	-.1036
.770	-.0885	-.0874	-.0809	-.0863
.950	-.1114	-.0820	-.0798	-.0526

BETA (7) = 5.020 ALPHA (3) = 4.130 Q(PSF) = 42.877 PO = 2113.0 RUN NO = 81.000

SECTION (1)MAIN LND GR DR-I DEPENDENT VARIABLE CP

Y/BML	.0760	.3100	.5820	.8530
X/CML				
.050	-.6218	-.0091	-.4525	-.6511
.230	-.0407	-.4776	-.0407	-.0989
.410	-.0407	-.0287	-.0287	-.0329
.590	-.0495	-.0451	-.0276	-.0461
.770	-.0549	-.0440	-.0320	-.0320
.950	-.0779	-.0484	-.0342	-.0123

OA1638 MAIN GEAR DOOR INNER SURFACE (RFPF09)

BETA (7) = 5.020 ALPHA (4) = 6.200 Q(PSF) = 42.877 PO = 2113.0 RUN NO = 81.000

SECTION (1)MAIN LND GR DR-I DEPENDENT VARIABLE CP

Y/BML	.0760	.3100	.5820	.8530
X/CML				
.050	-.5809	.0344	-.4059	-.4349
.230	.0028	-.4113	-.0286	-.0398
.410	.0039	.0137	.0104	-.0065
.590	-.0058	.0191	.0170	.0076
.770	-.0221	-.0090	-.0058	.0344
.950	-.0492	-.0145	.0104	.0409

OA163B MAIN GEAR DOOR INNER SURFACE (RFPF10) (27 APR 77)

REFERENCE DATA

SREF =	2690.0000 SQ.FT.	XMRP =	1076.7000 IN. XO		
LREF =	474.8100 INCHES	YMRP =	.0000 IN. YO		
BREF =	936.6800 INCHES	ZMRP =	375.0000 IN. ZO		
SCALE =	.0405				

PARAMETRIC DATA

SPDBRK =	25.000	BDFLAP =	.000
ELV-L =	.000	ELV-R =	.000
PHI-N =	66.000	THETAN =	108.000
PHI-ML =	32.200	THETML =	5.000
PHI-MR =	26.000	THETMR =	4.000

BETA (1) = -5.030 ALPHA (1) = .000 Q(PSF) = 42.882 PO = 2112.3 RUN NO = 83.000

SECTION (1)MAIN LND GR DR-I DEPENDENT VARIABLE CP

Y/BML	.0760	.3100	.5820	.8530
X/CML				
.050	-.6854	-.2624	-.2765	-.3309
.230	-.4255	-.6365	-.9040	-.2733
.410	-.1417	-.4299	-.1939	-.2197
.590	-.1721	-.1471	-.2613	-.2430
.770	-.2069	-.2330	-.2548	-.2711
.950	-.2276	-.2548	-.2472	-.2711

BETA (1) = -5.040 ALPHA (2) = 2.080 Q(PSF) = 42.882 PO = 2112.3 RUN NO = 83.000

SECTION (1)MAIN LND GR DR-I DEPENDENT VARIABLE CP

Y/BML	.0760	.3100	.5820	.8530
X/CML				
.050	-.6579	-.2115	-.6720	-.3535
.230	-.3879	-.5719	-.8190	-.2169
.410	-.1190	-.3672	-.1375	-.1724
.590	-.1331	-.0994	-.2028	-.1926
.770	-.1604	-.1799	-.1985	-.2213
.950	-.1789	-.1952	-.1963	-.2159

BETA (1) = -5.040 ALPHA (3) = 4.160 Q(PSF) = 42.982 PO = 2112.3 RUN NO = 83.000

SECTION (1)MAIN LND GR DR-I DEPENDENT VARIABLE CP

Y/BML	.0760	.3100	.5820	.8530
X/CML				
.050	-.6168	-.1582	-.7246	-.2838
.230	-.3281	-.4991	-.7246	-.1279
.410	-.0842	-.3118	-.0733	-.1188
.590	-.0918	-.0526	-.1386	-.1401
.770	-.1125	-.1234	-.1430	-.1648
.950	-.1310	-.1408	-.1539	-.1626

OA163B MAIN GEAR DOOR INNER SURFACE (RFPF10)

BETA (1) = -5.040 ALPHA (4) = 6.210 Q(PSF) = 42.882 PO = 2112.3 RUN NO = 83.000

SECTION (1)MAIN LND GR DR-I DEPENDENT VARIABLE CP

Y/BML	.0760	.3100	.5820	.8530
X/CML				
.050	-.5511	-.0665	-.6281	-.3430
.230	-.2215	-.4177	-.1402	-.1153
.410	-.0415	-.0155	-.0101	-.0760
.590	-.0469	-.0621	-.0686	-.0951
.770	-.0600	-.0751	-.1012	-.0675
.950	-.0795	-.0827	-.0925	-.0751

BETA (2) = -2.020 ALPHA (1) = .000 Q(PSF) = 42.935 PO = 2112.3 RUN NO = 84.000

SECTION (1)MAIN LND GR DR-I DEPENDENT VARIABLE CP

Y/BML	.0760	.3100	.5820	.8530
X/CML				
.050	-.7030	-.2324	-.8374	-.3531
.230	-.3788	-.5826	-.1576	-.1939
.410	-.1445	-.1055	-.1890	-.1798
.590	-.1532	-.1912	-.2150	-.1939
.770	-.1706	-.1923	-.2031	-.2291
.950	-.1890	-.2107	-.2248	-.2541

BETA (2) = -2.020 ALPHA (2) = 2.070 Q(PSF) = 42.935 PO = 2112.3 RUN NO = 84.000

SECTION (1)MAIN LND GR DR-I DEPENDENT VARIABLE CP

Y/BML	.0760	.3100	.5820	.8530
X/CML				
.050	-.6568	-.1639	-.7500	-.3357
.230	-.2842	-.5117	-.1065	-.1696
.410	-.1043	-.0642	-.1487	-.1373
.590	-.1152	-.1368	-.1563	-.1575
.770	-.1292	-.1542	-.1628	-.1856
.950	-.1498	-.1574	-.1780	-.1791

OA163B MAIN GEAR DOOR INNER SURFACE (RFPF10)

BETA (2) = -2.010 ALPHA (3) = 4.120 Q(PSF) = 42.935 PO = 2112.3 RUN NO = 84.000

SECTION (1)MAIN LND GR DR-I DEPENDENT VARIABLE CP

Y/BML	.0760	.3100	.5820	.8530
X/CML				
.050	-.5987	-.0886	-.6521	-.3469
.230	-.1900	-.4505	-.0210	-.1250
.410	-.0592	-.2270	-.0930	-.1017
.590	-.0734	-.0832	-.0919	-.1189
.770	-.0853	-.0821	-.1170	-.1028
.950	-.1039	-.1006	-.1213	-.0930

BETA (2) = -2.010 ALPHA (4) = 6.200 Q(PSF) = 42.935 PO = 2112.3 RUN NO = 84.000

SECTION (1)MAIN LND GR DR-I DEPENDENT VARIABLE CP

Y/BML	.0760	.3100	.5820	.8530
X/CML				
.050	-.5315	-.0253	-.5478	-.5244
.230	-.1068	-.3784	.0354	-.0802
.410	-.0144	-.1394	-.0351	-.0549
.590	-.0318	-.0405	-.0340	-.0590
.770	-.0427	-.0405	-.0557	-.0264
.950	-.0612	-.0459	-.0459	-.0394

BETA (3) = -.990 ALPHA (1) = .000 Q(PSF) = 42.877 PO = 2112.3 RUN NO = 85.000

SECTION (1)MAIN LND GR DR-I DEPENDENT VARIABLE CP

Y/BML	.0760	.3100	.5820	.8530
X/CML				
.050	-.7098	-.2122	-.8163	-.3397
.230	-.3317	-.5675	-.1383	-.2014
.410	-.1394	-.3600	-.1177	-.1741
.590	-.1492	-.1785	-.1959	-.1862
.770	-.1644	-.1926	-.1926	-.2231
.950	-.1839	-.1970	-.2165	-.2361

OA163B MAIN GEAR DOOR INNER SURFACE (RFPF10)

BETA (3) = -.990 ALPHA (2) = 2.070 Q(PSF) = 42.877 PO = 2112.3 RUN NO = 85.000

SECTION (1)MAIN LND GR DR-I DEPENDENT VARIABLE CP

Y/BML	.0760	.3100	.5820	.8530
X/CML				
.050	-.6529	-.1406	-.7215	-.2926
.230	-.2364	-.4974	-.3582	-.1753
.410	-.0960	-.2918	-.0645	-.1338
.590	-.1124	-.0786	-.1363	-.1551
.770	-.1211	-.1287	-.1689	-.1602
.950	-.1395	-.1417	-.1624	-.1461

BETA (3) = -.990 ALPHA (3) = 4.130 Q(PSF) = 42.877 PO = 2112.3 RUN NO = 86.000

SECTION (1)MAIN LND GR DR-I DEPENDENT VARIABLE CP

Y/BML	.0760	.3100	.5820	.8530
X/CML				
.050	-.5848	-.0733	-.6382	-.4374
.230	-.1505	-.4433	-.0090	-.1228
.410	-.0547	-.0352	-.0809	-.0914
.590	-.0741	-.0820	-.0852	-.1097
.770	-.0787	-.0809	-.1037	-.0939
.950	-.0994	-.0863	-.1070	-.0874

BETA (3) = -1.000 ALPHA (4) = 6.220 Q(PSF) = 42.877 PO = 2112.3 RUN NO = 85.000

SECTION (1)MAIN LND GR DR-I DEPENDENT VARIABLE CP

Y/BML	.0760	.3100	.5820	.8530
X/CML				
.050	-.5245	-.0123	-.5245	-.5300
.230	-.0677	-.3722	-.1504	-.0732
.410	-.0090	-.1178	.0485	-.0418
.590	-.0264	-.0319	-.0199	-.0459
.770	-.0362	-.0351	-.0438	-.0188
.950	-.0590	-.0373	-.0395	-.0199

OA163B MAIN GEAR DOOR INNER SURFACE (RFPF10)

BETA (4) = -.010 ALPHA (1) = .000 Q(PSF) = 42.892 PO = 2112.3 RUN NO = 86.060

SECTION (1)MAIN LND GR DR-I DEPENDENT VARIAELE CP

Y/BML	.0760	.3100	.5820	.8530
X/CML				
.050	-.7038	-.1928	-.6211	-.3035
.230	-.2928	-.5690	-.7962	-.2106
.410	-.1275	-.3232	-.1003	-.1651
.590	-.1438	-.1014	-.1862	-.1752
.770	-.1580	-.1601	-.1917	-.2091
.950	-.1765	-.1808	-.2080	-.2091

BETA (4) = -.010 ALPHA (2) = 2.060 Q(PSF) = 42.892 PO = 2112.3 RUN NO = 86.000

SECTION (1)MAIN LND GR DR-I DEPENDENT VARIAELE CP

Y/BML	.0760	.3100	.5820	.8530
X/CML				
.050	-.6520	-.1146	-.7009	-.2977
.230	-.2005	-.4888	-.6987	-.1682
.410	-.0841	-.2462	-.0482	-.1268
.590	-.1037	-.0689	-.1222	-.1511
.770	-.1167	-.1102	-.1570	-.1505
.950	-.1374	-.1287	-.1461	-.1265

BETA (4) = -.010 ALPHA (3) = 4.120 Q(PSF) = 42.892 PO = 2112.3 RUN NO = 86.000

SECTION (1)MAIN LND GR DR-I DEPENDENT VARIAELE CP

Y/BML	.0760	.3100	.5820	.8530
X/CML				
.050	-.5800	-.0503	-.5941	-.4887
.230	-.1132	-.4324	.0072	-.1184
.410	-.0481	-.1729	-.0655	-.0841
.590	-.0665	-.0427	-.0720	-.0962
.770	-.0720	-.0720	-.0893	-.0741
.950	-.0948	-.0774	-.0904	-.0644

OA163B MAIN GEAR DOOR INNER SURFACE (RFPF10)

BETA (4) = -.010 ALPHA (4) = 6.190 Q(PSF) = 42.892 PO = 2112.3 RUN NO = 86.000

SECTION (1)MAIN LND GR DR-I DEPENDENT VARIABLE CP

Y/BML	.0760	.3100	.5820	.8530
X/CML				
.050	-.5172	.0018	-.4998	-.5809
.230	-.0362	-.3714	.0540	-.0732
.410	-.0047	.0105	-.0090	-.0297
.590	-.0221	-.0264	-.0058	-.0307
.770	-.0319	-.0286	-.0297	-.0090
.950	-.0558	-.0319	-.0275	-.0090

BETA (5) = .990 ALPHA (1) = .000 Q(PSF) = 42.887 PO = 2112.3 RUN NO = 87.000

SECTION (1)MAIN LND GR DR-I DEPENDENT VARIABLE CP

Y/BML	.0760	.3100	.5820	.8530
X/CML				
.050	-.6887	-.1721	-.7616	-.2763
.230	-.2504	-.5441	-.0841	-.2096
.410	-.1178	-.3037	-.1667	-.1581
.590	-.1363	-.1537	-.1602	-.1742
.770	-.1471	-.1569	-.1917	-.1950
.950	-.1678	-.1678	-.1917	-.1765

BETA (5) = .990 ALPHA (2) = 2.060 Q(PSF) = 42.887 PO = 2112.3 RUN NO = 87.000

SECTION (1)MAIN LND GR DR-I DEPENDENT VARIABLE CP

Y/BML	.0760	.3100	.5820	.8530
X/CML				
.050	-.6353	-.0993	-.6733	-.3419
.230	-.1634	-.4863	-.2754	-.1489
.410	-.0819	-.2254	-.0906	-.1196
.590	-.0971	-.1058	-.1090	-.1398
.770	-.1069	-.1025	-.1341	-.1362
.950	-.1275	-.1167	-.1286	-.1058

CA163B MAIN GEAR DOOR INNER SURFACE (RFPF10)

BETA (5) = .990 ALPHA (3) = 4.120 Q(PSF) = 42.887 PO = 2112.3 RUN NO = 87.000

SECTION (1)MAIN LND GR DR-I DEPENDENT VARIABLE CP

Y/BML	.0760	.3100	.5820	.8530
X/CML				
.050	-.5722	-.0363	-.5744	-.4631
.230	-.0766	-.4088	-.5668	-.1148
.410	-.0406	-.0341	.0181	-.0743
.590	-.0570	-.0624	-.0570	-.0824
.770	-.0646	-.0635	-.0798	-.0613
.950	-.0975	-.0690	-.0679	-.0472

BETA (5) = .990 ALPHA (4) = 6.190 Q(PSF) = 42.887 PO = 2112.3 RUN NO = 87.000

SECTION (1)MAIN LND GR DR-I DEPENDENT VARIABLE CP

Y/BML	.0760	.3100	.5820	.8530
X/CML				
.050	-.5113	.0137	-.4723	-.5993
.230	-.0101	-.3507	.0560	-.0730
.410	.0017	.0137	.0061	-.0216
.590	-.0133	-.0166	.0083	-.0216
.770	-.0264	-.0166	-.0166	-.0025
.950	-.0513	-.0264	-.0144	-.0003

BETA (6) = 1.590 ALPHA (1) = .000 Q(PSF) = 42.840 PO = 2112.3 RUN NO = 88.000

SECTION (1)MAIN LND GR DR-I DEPENDENT VARIABLE CP

Y/BML	.0760	.3100	.5820	.8530
X/CML				
.050	-.6828	-.1490	-.7435	-.2586
.230	-.2043	-.5374	-.7435	-.1829
.410	-.1121	-.2640	-.0708	-.1496
.590	-.1316	-.0936	-.1501	-.1708
.770	-.1403	-.1457	-.1826	-.1848
.950	-.1609	-.1522	-.1739	-.1837

OA163B MAIN GEAR DOOR INNER SURFACE (RFPF10)

BETA (6) = 1.990 ALPHA (2) = 2.070 Q(PSF) = 42.840 PO = 2112.3 RUN NO = 88.000

SECTION (1)MAIN LND GR DR-I DEPENDENT VARIABLE CP

Y/BML	.0760	.3100	.5820	.8530
X/CML				
.050	-.6256	-.0833	-.6420	-.4183
.230	-.1247	-.4717	-.0996	-.1404
.410	-.0767	-.0580	-.0974	-.1079
.590	-.0920	-.0603	-.0942	-.1282
.770	-.1007	-.0953	-.1291	-.1225
.950	-.1215	-.1029	-.1127	-.0898

BETA (6) = 1.990 ALPHA (3) = 4.120 Q(PSF) = 42.840 PO = 2112.3 RUN NO = 89.000

SECTION (1)MAIN LND GR DR-I DEPENDENT VARIABLE CP

Y/BML	.0760	.3100	.5820	.8530
X/CML				
.050	-.5724	-.0243	-.5528	-.4754
.230	-.0505	-.4111	.0203	-.1199
.410	-.0374	-.0199	-.0450	-.0652
.590	-.0526	-.0581	-.0483	-.0723
.770	-.0603	-.0581	-.0592	-.0505
.950	-.0831	-.0592	-.0570	-.0374

BETA (6) = 1.990 ALPHA (4) = 6.220 Q(PSF) = 42.840 PO = 2112.3 RUN NO = 88.000

SECTION (1)MAIN LND GR DR-I DEPENDENT VARIABLE CP

Y/BML	.0760	.3100	.5820	.8530
X/CML				
.050	-.5237	.0300	-.4453	-.6476
.230	.0039	-.0482	.0562	-.0732
.410	.0028	.0235	.0137	-.0206
.590	-.0123	-.0123	.0170	-.0115
.770	-.0232	-.0156	-.0090	.0072
.950	-.0515	-.0232	-.0112	.0126

DATE 27 APR 77 OA163B PRESSURE DATA LISTING

OA163B MAIN GEAR DOOR INNER SURFACE (RFPF10)

BETA (7) = 5.020 ALPHA (1) = .000 Q(PSF) = 42.755 PO = 2112.3 RUN NO = 89.000

SECTION (1)MAIN LND GR DR-I DEPENDENT VARIABLE CP

Y/BML	.0760	.3100	.5820	.8530
X/CML				
.050	-.6915	-.0961	-.6741	-.3383
.230	-.1124	-.5087	-.0635	-.1602
.410	-.1048	-.0685	-.1212	-.1238
.590	-.1179	-.1266	-.1179	-.1451
.770	-.1233	-.1212	-.1320	-.1429
.950	-.1440	-.1190	-.1309	-.1016

BETA (7) = 5.020 ALPHA (2) = 2.060 Q(PSF) = 42.755 PO = 2112.3 RUN NO = 89.000

SECTION (1)MAIN LND GR DR-I DEPENDENT VARIABLE CP

Y/BML	.0760	.3100	.5820	.8530
X/CML				
.050	-.6942	-.0483	-.5534	-.5520
.230	-.0756	-.0745	-.0221	-.1464
.410	-.0767	-.0538	-.0734	-.0896
.590	-.0865	-.0876	-.0800	-.1048
.770	-.0909	-.0832	-.0821	-.0821
.950	-.1116	-.0854	-.0767	-.0516

BETA (7) = 5.020 ALPHA (3) = 4.120 Q(PSF) = 42.755 PO = 2112.3 RUN NO = 89.000

SECTION (1)MAIN LND GR DR-I DEPENDENT VARIABLE CP

Y/BML	.0760	.3100	.5820	.8530
X/CML				
.050	-.6173	-.0090	-.4505	-.6407
.230	-.0407	-.0298	-.0417	-.1068
.410	-.0407	-.0232	-.0298	-.0430
.590	-.0494	-.0461	-.0308	-.0541
.770	-.0559	-.0439	-.0330	-.0298
.950	-.0766	-.0505	-.0330	-.0134

OA163B MAIN GEAR DOOR INNER SURFACE (RFPF10)

BETA (7) = 5.020 ALPHA (4) = 6.200 Q(PSF) = 42.755 PO = 2112.3 RUN NO = 89.000

SECTION (1)MAIN LND GR DR-I DEPENDENT VARIABLE CP

Y/BML	.0760	.3100	.5820	.8530
X/CML				
.050	-.6026	.0387	-.4168	-.4210
.230	-.0036	.0160	-.0222	-.0370
.410	.0018	.0247	.0127	-.0095
.590	-.0069	-.0003	.0094	.0056
.770	-.0222	-.0047	.0149	.0302
.950	-.0528	-.0211	.0160	.0400

OA163B MAIN GEAR DOOR INNER SURFACE (RFPF11) (27 APR 77)

REFERENCE DATA

SREF =	2690.0000 SQ.FT.	XMRP =	1076.7000 IN. XO		
LREF =	474.8100 INCHES	YMRP =	.0000 IN. YO		
BREF =	936.6800 INCHES	ZMRP =	375.0000 IN. ZO		
SCALE =	.0405				

PARAMETRIC DATA

SPDBRK =	25.000	BDFLAP =	.000
ELV-L =	.000	ELV-R =	.000
PHI-N =	66.000	THETAN =	108.000
PHI-ML =	88.000	THETML =	98.000
PHI-MR =	32.200	THETMR =	5.000

BETA (1) = -5.030 ALPHA (1) = .000 Q(PSF) = 42.830 PO = 2113.1 RUN NO = 90.000

SECTION (1)MAIN LND GR DR-I DEPENDENT VARIABLE CP

Y/BML	.0760	.3100	.5820	.8530
X/CML				
.050	-.5538	-.2271	-.2185	-.7316
.230	-.4387	-.4898	-.6949	-.2203
.410	-.0741	-.3248	-.1566	-.1194
.590	-.0079	-.0318	-.0926	-.1608
.770	-.0709	-.0828	-.1295	-.1902
.950	-.2434	-.0861	-.1468	-.1870

BETA (1) = -5.030 ALPHA (2) = 2.050 Q(PSF) = 42.830 PO = 2113.1 RUN NO = 90.000

SECTION (1)MAIN LND GR DR-I DEPENDENT VARIABLE CP

Y/BML	.0760	.3100	.5820	.8530
X/CML				
.050	-.5657	-.1626	-.6223	-.6058
.230	-.3151	-.4056	-.6180	-.1594
.410	-.0156	-.2639	-.1354	-.0834
.590	.0388	.0181	-.0276	-.0986
.770	-.0232	-.0090	-.0559	-.1103
.950	-.2095	-.0123	-.0548	-.1169

BETA (1) = -5.030 ALPHA (3) = 4.130 Q(PSF) = 42.830 PO = 2113.1 RUN NO = 90.000

SECTION (1)MAIN LND GR DR-I DEPENDENT VARIABLE CP

Y/BML	.0760	.3100	.5820	.8530
X/CML				
.050	-.5217	-.1083	-.5348	-.6208
.230	-.1694	-.3385	-.0723	-.0795
.410	.0487	-.1694	.0410	-.0217
.590	.0901	.0617	.0421	-.0420
.770	.0203	.0879	.0203	-.0287
.950	-.1716	-.1269	.0432	-.1225

DATE 27 APR 77 OA163B PRESSURE DATA LISTING (RFPF11)

OA163B MAIN GEAR DOOR INNER SURFACE

BETA (1) = -5.030 ALPHA (4) = 6.190 Q(PSF) = 42.830 PO = 2113.1 RUN NO = 90.000

SECTION (1)MAIN LND GR DR-I DEPENDENT VARIABLE CP

Y/BML	.0760	.3100	.5820	.8530
X/CML				
.050	-.4591	-.0406	-.4340	-.5311
.230	-.0025	-.2847	.0105	.0157
.410	.1075	-.0908	.1053	.0319
.590	.1358	.1401	.1053	.0319
.770	.0584	.1053	.1194	.0573
.950	-.1376	-.0831	.1227	-.0548

BETA (2) = -2.010 ALPHA (1) = .000 Q(PSF) = 42.847 PO = 2113.0 RUN NO = 91.000

SECTION (1)MAIN LND GR DR-I DEPENDENT VARIABLE CP

Y/BML	.0760	.3100	.5820	.8530
X/CML				
.050	-.6220	-.1717	-.6752	-.6780
.230	-.2889	-.4321	-.6654	-.1859
.410	-.0166	-.2813	-.0882	-.0972
.590	.0234	-.0188	-.0491	-.1234
.770	-.0481	.0213	-.0708	-.1208
.950	-.2455	-.1522	-.0481	-.1913

BETA (2) = -2.010 ALPHA (2) = 2.060 Q(PSF) = 42.847 PO = 2113.0 RUN NO = 91.000

SECTION (1)MAIN LND GR DR-I DEPENDENT VARIABLE CP

Y/BML	.0760	.3100	.5820	.8530
X/CML				
.050	-.5674	-.1017	-.5837	-.6632
.230	-.1355	-.3809	-.0559	-.0896
.410	.0377	-.2042	.0192	-.0490
.590	.0617	.0290	.0170	-.0612
.770	-.0221	.0672	.0388	-.0374
.950	-.2293	-.1530	.0345	-.1355

OA163B MAIN GEAR DOOR INNER SURFACE (RFPF11)

BETA (2) = -2.010 ALPHA (3) = 4.100 Q(PSF) = 42.847 PO = 2113.0 RUN NO = 91.000

SECTION (1)MAIN LND GR DR-I DEPENDENT VARIABLE CP

Y/BML	.0760	.3100	.5820	.8530
X/CML				
.050	-.4990	-.3379	-.4914	-.6278
.230	-.0003	-.3324	.0301	-.0105
.410	.0758	-.0885	.0769	.0076
.590	.0943	.1128	.0725	.0106
.770	-.0003	.1106	.1106	.0508
.950	-.2072	-.1114	.1096	-.0689

BETA (2) = -2.000 ALPHA (4) = 6.170 Q(PSF) = 42.847 PO = 2113.0 RUN NO = 91.000

SECTION (1)MAIN LND GR DR-I DEPENDENT VARIABLE CP

Y/BML	.0760	.3100	.5820	.8530
X/CML				
.050	-.4315	-.2921	-.3814	-.7978
.230	.0889	-.2986	.1008	.0127
.410	.1085	.0214	.1302	.0693
.590	.1259	.1324	.1281	.0794
.770	.0214	.1629	.1792	.1683
.950	-.1930	-.0744	.1814	-.0003

BETA (3) = -1.000 ALPHA (1) = -.020 Q(PSF) = 42.940 PO = 2113.0 RUN NO = 92.000

SECTION (1)MAIN LND CR DR-I DEPENDENT VARIABLE CP

Y/BML	.0760	.3100	.5820	.8530
X/CML				
.050	-.6137	-.4391	-.6543	-.7077
.230	-.2235	-.4347	-.0995	-.1577
.410	-.0025	-.2655	-.0294	-.0906
.590	.0244	-.0100	-.0305	-.1106
.770	-.0553	.0287	-.0165	-.0930
.950	-.2580	-.1879	-.0122	-.1803

OA163B MAIN GEAR DOOR INNER SURFACE (RFPF11)

BETA (3) = -1.010 ALPHA (2) = 2.030 Q(PSF) = 42.940 PO = 2113.0 RUN NO = 92.000

SECTION (1)MAIN LND GR DR-I DEPENDENT VARIABLE CP

Y/BML	.0760	.3100	.5820	.8530
X/CML				
.050	-.5608	-.3910	-.5717	-.5891
.230	-.0743	-.3699	-.0145	-.0631
.410	.0377	.0583	.0290	-.0369
.590	.0562	.0768	.0246	-.0439
.770	-.0351	.0409	.0638	-.0090
.950	-.2506	-.1472	.0638	-.1135

BETA (3) = -1.010 ALPHA (3) = 4.110 Q(PSF) = 42.940 PO = 2113.0 RUN NO = 92.000

SECTION (1)MAIN LND GR DR-I DEPENDENT VARIABLE CP

Y/BML	.0760	.3100	.5820	.8530
X/CML				
.050	-.4846	-.3464	-.4683	-.9026
.230	.0355	-.3475	.0638	-.0146
.410	.0714	-.0384	.0855	.0238
.590	.0877	.1225	.0845	.0319
.770	-.0177	.0855	.1367	.0877
.950	-.2354	-.1113	.1356	-.0580

BETA (3) = -1.010 ALPHA (4) = 6.170 Q(PSF) = 42.940 PO = 2113.0 RUN NO = 92.000

SECTION (1)MAIN LND GR DR-I DEPENDENT VARIABLE CP

Y/BML	.0760	.3100	.5820	.8530
X/CML				
.050	-.4252	-.3304	-.3827	-.7294
.230	.1063	.1096	.1227	.0106
.410	.0998	.1488	.1357	.0876
.590	.1172	.1684	.1347	.0937
.770	.0028	.1314	.1902	.1988
.950	-.2171	-.0733	.1836	.0094

OA163B MAIN GEAR DOOR INNER SURFACE (RFPF11)

BETA (4) = .010 ALPHA (1) = -.030 Q(PSF) = 42.855 PO = 2113.0 RUN NO = 93.000

SECTION (1)MAIN LND GR DR-I DEPENDENT VARIABLE CP

Y/BML	.0760	.3100	.5820	.8530
X/CML				
.050	-.6141	-.4424	-.6477	-.7172
.230	-.1578	-.4446	-.0677	-.1266
.410	.0018	.0159	-.0155	-.0781
.590	.0224	.0365	-.0177	-.0933
.770	-.0720	.0018	-.0003	-.0698
.950	-.2828	-.1839	.0094	-.1676

BETA (4) = .010 ALPHA (2) = 2.030 Q(PSF) = 42.855 PO = 2113.0 RUN NO = 93.000

SECTION (1)MAIN LND GR DR-I DEPENDENT VARIABLE CP

Y/BML	.0760	.3100	.5820	.8530
X/CML				
.050	-.5478	-.3954	-.5587	-.6711
.230	-.0286	-.1113	.0224	-.0449
.410	.0366	.0649	.0420	-.0227
.590	.0496	.0834	.0420	-.0237
.770	-.0537	.0464	.0845	.0192
.950	-.2735	-.1451	.0867	-.1026

BETA (4) = .010 ALPHA (3) = 4.100 Q(PSF) = 42.855 PO = 2113.0 RUN NO = 93.000

SECTION (1)MAIN LND GR DR-I DEPENDENT VARIABLE CP

Y/BML	.0760	.3100	.5820	.8530
X/CML				
.050	-.4790	-.3680	-.4583	-.9235
.230	.0638	.0224	.0888	-.0196
.410	.0627	.1127	.0953	.0349
.590	.0768	.1323	.0953	.0430
.770	-.0373	.0953	.1551	.1312
.950	-.2603	-.1124	.1540	-.0449

DATE 27 APR 77 OA163B PRESSURE DATA LISTING (RFPF11)

OA163B MAIN GEAR DOOR INNER SURFACE

BETA (4) = .010 ALPHA (4) = 6.170 Q(PSF) = 42.855 PO = 2113.0 RUN NO = 93.000

SECTION (1)MAIN LND GR DR-I DEPENDENT VARIABLE CP

Y/BML	.0760	.3100	.5820	.8530
X/CML				
.050	-.4428	-.3665	-.3709	-.8006
.230	.1031	.1391	.1314	.0127
.410	.0878	.1554	.1347	.0856
.590	.1031	.1750	.1358	.0967
.770	-.0145	.1347	.1989	.2228
.950	-.2357	-.0712	.1957	.0018

BETA (5) = 1.010 ALPHA (1) = -.030 Q(PSF) = 42.927 PO = 2113.1 RUN NO = 94.000

SECTION (1)MAIN LND GR DR-I DEPENDENT VARIABLE CP

Y/BML	.0760	.3100	.5820	.8530
X/CML				
.050	-.6032	-.1172	-.6400	-.6291
.230	-.1086	-.4376	-.0479	-.0990
.410	-.0003	.0256	-.0122	-.0688
.590	.0147	.0461	-.0079	-.0738
.770	-.0880	.0147	-.0003	-.0458
.950	-.3066	-.1757	.0407	-.1508

BETA (5) = 1.010 ALPHA (2) = 2.060 Q(PSF) = 42.927 PO = 2113.1 RUN NO = 94.000

SECTION (1)MAIN LND GR DR-I DEPENDENT VARIABLE CP

Y/BML	.0760	.3100	.5820	.8530
X/CML				
.050	-.5328	-.0699	-.5404	-.9488
.230	.0115	-.4046	.0452	-.0438
.410	.0267	-.0579	.0517	-.0075
.590	.0398	.0691	.0561	-.0054
.770	-.0720	.0985	.0767	.0372
.950	-.2970	-.1438	.1072	-.0927

OA1638 MAIN GEAR DOOR INNER SURFACE (RFPF11)

BETA (5) = 1.010 ALPHA (3) = 4.100 Q(PSF) = 42.927 PO = 2113.1 RUN NO = 94.000

SECTION (1)MAIN LND GR DR-I DEPENDENT VARIABLE CP

Y/BML	.0760	.3100	.5820	.8530
X/CML				
.050	-.4904	-.0199	-.4426	-.7993
.230	.0680	-.4133	.0430	-.0236
.410	.0507	.1191	.1006	.0500
.590	.0659	.1398	.1017	.0581
.770	-.0590	.1017	.1430	.1669
.950	-.2829	-.1101	.1582	-.0318

BETA (5) = 1.010 ALPHA (4) = 6.190 Q(PSF) = 42.927 PO = 2113.1 RUN NO = 94.000

SECTION (1)MAIN LND GR DR-I DEPENDENT VARIABLE CP

Y/BML	.0760	.3100	.5820	.8530
X/CML				
.050	-.4861	-.0036	-.3467	-.7839
.230	.0845	-.3674	.1303	.0309
.410	.0758	.1357	.1423	.0896
.590	.0922	.1825	.1433	.1088
.770	-.0341	.1357	.1890	.2422
.950	-.2530	-.0722	.1988	-.0493

BETA (6) = 1.990 ALPHA (1) = .000 Q(PSF) = 42.897 PO = 2113.0 RUN NO = 95.000

SECTION (1)MAIN LND GR DR-I DEPENDENT VARIABLE CP

Y/BML	.0760	.3100	.5820	.8530
X/CML				
.050	-.5923	-.1062	-.6323	-.6761
.230	-.0543	-.4465	-.0100	-.0807
.410	-.0079	.0007	.0104	-.0526
.590	.0039	.0547	.0104	-.0536
.770	-.1062	.0547	.0212	-.0154
.950	-.3320	-.1105	.0601	-.1321

OA163B MAIN GEAR DOOR INNER SURFACE (RFPF11)

BETA (6) = 1.990 ALPHA (2) = 2.030 Q(PSF) = 42.897 PO = 2113.0 RUN NO = 93.000

SECTION (1)MAIN LND GR DR-I DEPENDENT VARIABLE CP

Y/BML	.0760	.3100	.5820	.8530
X/CML				
.050	-.5336	-.0569	-.5249	-1.0059
.230	.0290	.0170	.0671	-.0439
.410	.0126	.0845	.0638	.0046
.590	.0279	.1062	.0627	.0116
.770	-.0917	.0714	.1269	.0975
.950	-.3214	-.1396	.1247	-.0863

BETA (6) = 2.000 ALPHA (3) = 4.110 Q(PSF) = 42.897 PO = 2113.0 RUN NO = 95.000

SECTION (1)MAIN LND GR DR-I DEPENDENT VARIABLE CP

Y/BML	.0760	.3100	.5820	.8530
X/CML				
.050	-.5256	-.0145	-.0210	-.8553
.230	.0530	.1129	.1042	-.0126
.410	.0377	.1260	.1097	.0613
.590	.0530	.1489	.1064	.0853
.770	-.0755	.1086	.1729	.1913
.950	-.3011	-.1039	.1761	-.0178

BETA (6) = 2.000 ALPHA (4) = 6.180 Q(PSF) = 42.897 PO = 2113.0 RUN NO = 95.000

SECTION (1)MAIN LND GR DR-I DEPENDENT VARIABLE CP

Y/BML	.0760	.3100	.5820	.8530
X/CML				
.050	-.5178	-.0058	-.0286	-.7223
.230	.0671	.1466	.1423	.0400
.410	.0628	.1673	.1521	.1018
.590	.0802	.1858	.1510	.1240
.770	-.0461	.1423	.2065	.2553
.950	-.2618	-.0733	.1107	-.0319

OA1638 MAIN GEAR DOOR INNER SURFACE (RFPF11)

BETA (7) = 5.040 ALPHA (1) = -.020 Q(PSF) = 42.875 PO = 2113.1 RUN NO = 96.000

SECTION (1)MAIN LND GR DR-I DEPENDENT VARIABLE CP

Y/BML	.0760	.3100	.5820	.8530
X/CML				
.050	-.6361	-.5421	-.5431	-.9561
.230	-.0198	.0428	.0450	-.0718
.410	-.0457	.0601	.0396	-.0185
.590	-.0274	.0839	.0450	-.0425
.770	-.1549	.0461	.1055	.0850
.950	-.3788	-.1668	.1055	-.1290

BETA (7) = 5.030 ALPHA (2) = 2.050 Q(PSF) = 42.875 PO = 2113.1 RUN NO = 96.000

SECTION (1)MAIN LND GR DR-I DEPENDENT VARIABLE CP

Y/BML	.0760	.3100	.5820	.8530
X/CML				
.050	-.6756	-.4973	-.2428	-.9029
.230	-.0199	.0757	.0692	-.0418
.410	-.0232	.0953	.0757	.0157
.590	-.0003	.1181	.0768	.0288
.770	-.1232	.0735	.1312	.1660
.950	-.3396	-.1417	.1268	-.1069

BETA (7) = 5.030 ALPHA (3) = 4.100 Q(PSF) = 42.875 PO = 2113.1 RUN NO = 96.000

SECTION (1)MAIN LND GR DR-I DEPENDENT VARIABLE CP

Y/BML	.0760	.3100	.5820	.8530
X/CML				
.050	-.6607	-.0931	-.0964	-.7085
.230	-.0025	.1022	.1022	.0117
.410	.0007	.1360	.1164	.0665
.590	.0236	.1524	.1164	.0786
.770	-.0964	.0956	.1404	.1927
.950	-.2983	-.1258	.1382	-.0975

OA163B MAIN GEAR DOOR INNER SURFACE (RFPF11)

BETA (7) = 5.030 ALPHA (4) = 6.190 Q(PSF) = 42.875 PO = 2113.1 RUN NO = 96.000

SECTION (1)MAIN LND GR DR-1 DEPENDENT VARIABLE CP

Y/BML	.0760	.3100	.5820	.8530
X/CML				
.050	-.5791	-.0548	-.1388	-.1767
.230	.0323	.1467	.1467	.0552
.410	.0323	.1838	.1653	.1140
.590	.0573	.1925	.1664	.1322
.770	-.0625	.1304	.1751	.2348
.950	-.2532	-.0919	.1761	-.0788

OA163B MAIN GEAR DOOR INNER SURFACE (RFPF12) (27 APR 77)

REFERENCE DATA

SREF =	2690.0000 SQ.FT.	XMRP =	1076.7000 IN. XO		
LREF =	474.8100 INCHES	YMRP =	.0000 IN. YO		
BREF =	936.6800 INCHES	ZMRP =	375.0000 IN. ZO		
SCALE =	.0405				

PARAMETRIC DATA

SPDBRK =	25.000	BDFLAP =	.000
ELV-L =	5.000	ELV-R =	5.000
PHI-N =	30.800	THETAN =	5.000
PHI-ML =	32.200	THETML =	5.000
PHI-MR =	32.200	THETMR =	5.000

ALPHA (1) = 4.180 BETA (1) = -5.050 Q(PSF) = 42.851 PO = 2115.1 RUN NO = 50.000

SECTION (1)MAIN LND GR DR-I DEPENDENT VARIABLE CP

Y/BML	.0760	.3100	.5820	.8530
X/CML				
.050	-.1254	-.1341	-.1406	-.2814
.230	-.3059	-.4908	-.7169	-.1136
.410	-.0732	-.2831	-.0547	-.1035
.590	-.0775	-.0651	-.1308	-.1186
.770	-.0971	-.1123	-.1330	-.1460
.950	-.1134	-.1232	-.1395	-.1439

ALPHA (1) = 4.170 BETA (2) = -4.020 Q(PSF) = 42.851 PO = 2115.1 RUN NO = 50.000

SECTION (1)MAIN LND GR DR-I DEPENDENT VARIABLE CP

Y/BML	.0760	.3100	.5820	.8530
X/CML				
.050	-.1095	-.1149	-.1226	-.3372
.230	-.2688	-.4772	-.6912	-.1191
.410	-.0713	-.2579	-.0374	-.0978
.590	-.0756	-.0331	-.1149	-.1201
.770	-.0876	-.0887	-.1324	-.1149
.950	-.1040	-.1095	-.1302	-.1116

ALPHA (1) = 4.180 BETA (3) = -2.970 Q(PSF) = 42.851 PO = 2115.1 RUN NO = 50.000

SECTION (1)MAIN LND GR DR-I DEPENDENT VARIABLE CP

Y/BML	.0760	.3100	.5820	.8530
X/CML				
.050	-.0882	-.0838	-.0925	-.3441
.230	-.2118	-.4602	-.6749	-.1143
.410	-.0557	-.2216	-.0242	-.0941
.590	-.0665	-.0318	-.0903	-.1123
.770	-.0752	-.0817	-.1240	-.0936
.950	-.0914	-.0914	-.1109	-.0925

OA163B MAIN GEAR DOOR INNER SURFACE (RFPF12)

ALPHA (1) = 4.170 BETA (4) = -2.040 Q(PSF) = 42.851 PO = 2115.1 RUN NO = 50.000

SECTION (1)MAIN LND GR DR-I DEPENDENT VARIABLE CP

Y/BML	.0760	.3100	.5820	.8530
X/CML				
.050	-.0788	-.0668	-.0780	-.3861
.230	-.1681	-.4470	-.6550	-.1077
.410	-.0504	-.2019	-.0058	-.0844
.590	-.0624	-.0308	-.0788	-.1316
.770	-.0711	-.0722	-.1082	-.0875
.950	-.0875	-.0798	-.1016	-.0853

ALPHA (1) = 4.180 BETA (5) = -1.040 Q(PSF) = 42.851 PO = 2115.1 RUN NO = 50.000

SECTION (1)MAIN LND GR DR-I DEPENDENT VARIABLE CP

Y/BML	.0760	.3100	.5820	.8530
X/CML				
.050	-.0678	-.0558	-.4648	-.4937
.230	-.1308	-.4419	-.6018	-.1065
.410	-.0438	-.1787	.0105	-.0772
.590	-.0591	-.0362	-.0699	-.0934
.770	-.0634	-.0732	-.0939	-.0732
.950	-.0797	-.0765	-.0841	-.0667

ALPHA (1) = 4.170 BETA (6) = -.020 Q(PSF) = 42.851 PO = 2115.1 RUN NO = 50.000

SECTION (1)MAIN LND GR DR-I DEPENDENT VARIABLE CP

Y/BML	.0760	.3100	.5820	.8530
X/CML				
.050	-.0591	-.0406	-.5774	-.4720
.230	-.0951	-.4250	-.5829	-.1036
.410	-.0363	-.1484	.0137	-.0662
.590	-.0548	-.0297	-.0602	-.0753
.770	-.0602	-.0602	-.0787	-.0580
.950	-.0787	-.0602	-.0733	-.0526

OA163B MAIN GEAR DOOR INNER SURFACE (RFPF12)

ALPHA (1) = 4.170 BETA (7) = .970 Q(PSF) = 42.851 PO = 2115.1 RUN NO = 50.000

SECTION (1)MAIN LND GR DR-I DEPENDENT VARIABLE CP

Y/BML	.0760	.3100	.5820	.8530
X/CML				
.050	-.5688	-.0243	-.0319	-.4974
.230	-.0613	-.4065	-.5449	-.1006
.410	-.0308	-.1234	.0268	-.0571
.590	-.0472	-.0210	-.0395	-.0611
.770	-.0548	-.0559	-.0635	-.0461
.950	-.0744	-.0515	-.0515	-.0493

ALPHA (1) = 4.170 BETA (8) = 1.970 Q(PSF) = 42.851 PO = 2115.1 RUN NO = 50.000

SECTION (1)MAIN LND GR DR-I DEPENDENT VARIABLE CP

Y/BML	.0760	.3100	.5820	.8530
X/CML				
.050	-.5635	-.0112	-.5233	-.5127
.230	-.0297	-.4026	-.5244	-.1065
.410	-.0253	-.1003	.0387	-.0408
.590	-.0395	-.0123	-.0221	-.0499
.770	-.0460	-.0471	-.0514	-.0329
.950	-.0699	-.0449	-.0384	-.0286

ALPHA (1) = 4.170 BETA (9) = 2.990 Q(PSF) = 42.851 PO = 2115.1 RUN NO = 50.000

SECTION (1)MAIN LND GR DR-I DEPENDENT VARIABLE CP

Y/BML	.0760	.3100	.5820	.8530
X/CML				
.050	-.5595	.0050	-.4988	-.4828
.230	-.0079	-.3937	-.5021	-.1041
.410	-.0155	-.0610	.0332	-.0276
.590	-.0285	.0039	-.0101	-.0336
.770	-.0393	-.0350	-.0393	-.0177
.950	-.0664	-.0317	-.0274	-.0155

DATE 27 APR 77 OA163B PRESSURE DATA LISTING (RFPF12)

OA163B MAIN GEAR DOOR INNER SURFACE

ALPHA (1) = 4.170 BETA (10) = 4.050 Q(PSF) = 42.851 PO = 2115.1 RUN NO = 50.000

SECTION (1)MAIN LND GR DR-I DEPENDENT VARIABLE CP

Y/BML	.0760	.3100	.5820	.8530
X/CML				
.050	-.5465	.0236	-.3557	-.5262
.230	.0039	-.3753	-.4713	-.1058
.410	-.0025	-.0363	.0388	-.0247
.590	-.0156	.0116	.0083	-.0165
.770	-.0308	-.0145	-.0232	.0028
.950	-.0625	-.0221	-.0167	.0028

ALPHA (1) = 4.170 BETA (11) = 5.000 Q(PSF) = 42.851 PO = 2115.1 RUN NO = 50.000

SECTION (1)MAIN LND GR DR-I DEPENDENT VARIABLE CP

Y/BML	.0760	.3100	.5820	.8530
X/CML				
.050	-.5446	.0290	-.4017	-.5711
.230	.0148	-.3526	-.4257	-.1170
.410	.0094	-.0210	.0356	-.0217
.590	-.0036	.0334	.0170	-.0065
.770	-.0265	-.0069	-.0101	.0225
.950	-.0614	-.0156	-.0014	.0247

OA163B MAIN GEAR DOOR INNER SURFACE (RFPF13) (27 APR 77)

REFERENCE DATA

SREF = 2690.0000 SQ.FT. XMRP = 1076.7000 IN. XO
LREF = 474.8100 INCHES YMRP = .0000 IN. YO
BREF = 936.6800 INCHES ZMRP = 375.0000 IN. ZO
SCALE = .0405

PARAMETRIC DATA

SPDBRK =	25.000	BDFLAP =	.000
ELV-L =	.000	ELV-R =	.000
PHI-N =	66.000	THETAN =	108.000
PHI-ML =	32.200	THETML =	5.000
PHI-MR =	36.000	THETMR =	5.600

ALPHA (1) = 4.120 BETA (1) = -5.030 Q(PSF) = 42.904 PO = 2112.9 RUN NO = 82.000

SECTION (1)MAIN LND GR DR-I DEPENDENT VARIABLE CP

Y/BML	.0760	.3100	.5820	.8530
X/CML				
.050	-.6051	-.1559	-.6867	-.2815
.230	-.3256	-.4887	-.7150	-.1288
.410	-.0830	-.2799	-.0699	-.1207
.590	-.0906	-.0547	-.1363	-.1409
.770	-.1124	-.1374	-.1385	-.1602
.950	-.1309	-.1352	-.1570	-.1559

ALPHA (1) = 4.120 BETA (2) = -4.040 Q(PSF) = 42.904 PO = 2112.9 RUN NO = 82.000

SECTION (1)MAIN LND GR DR-I DEPENDENT VARIABLE CP

Y/BML	.0760	.3100	.5820	.8530
X/CML				
.050	-.6021	-.1394	-.6966	-.3285
.230	-.2806	-.4815	-.7053	-.1226
.410	-.0774	-.2708	-.0535	-.1084
.590	-.0840	-.0470	-.1285	-.1276
.770	-.0992	-.1046	-.1350	-.1448
.950	-.1198	-.1231	-.1448	-.1481

ALPHA (1) = 4.120 BETA (3) = -2.950 Q(PSF) = 42.904 PO = 2112.9 RUN NO = 82.000

SECTION (1)MAIN LND GR DR-I DEPENDENT VARIABLE CP

Y/BML	.0760	.3100	.5820	.8530
X/CML				
.050	-.6079	-.1025	-.6796	-.3560
.230	-.2318	-.4709	-.0427	-.1297
.410	-.0677	-.2514	-.0949	-.1055
.590	-.0775	-.0460	-.1123	-.1226
.770	-.0916	-.0916	-.1340	-.1144
.950	-.1101	-.1079	-.1307	-.1166

OA163B MAIN GEAR DOOR INNER SURFACE (RFPF13)

ALPHA (1) = 4.120 BETA (4) = -2.010 Q(PSF) = 42.904 PO = 2112.9 RUN NO = 82.000

SECTION (1)MAIN LND GR DR-I DEPENDENT VARIABLE CP

Y/BML	.0760	.3100	.5820	.8530
X/CML				
.050	-.6008	-.0883	-.6519	-.3577
.230	-.1914	-.4575	-.0199	-.1245
.410	-.0590	-.0524	-.0948	-.1003
.590	-.0785	-.0872	-.0883	-.1245
.770	-.0861	-.0894	-.1176	-.1046
.950	-.1046	-.1024	-.1122	-.0937

ALPHA (1) = 4.120 BETA (5) = -1.020 Q(PSF) = 42.904 PO = 2112.9 RUN NO = 82.000

SECTION (1)MAIN LND GR DR-I DEPENDENT VARIABLE CP

Y/BML	.0760	.3100	.5820	.8530
X/CML				
.050	-.5872	-.0678	-.6253	-.4315
.230	-.1473	-.4413	-.0058	-.1239
.410	-.0526	-.0319	-.0787	-.0915
.590	-.0700	-.0765	-.0798	-.1148
.770	-.0798	-.0765	-.1038	-.0907
.950	-.0994	-.0863	-.1059	-.0787

ALPHA (1) = 4.120 BETA (6) = .000 Q(PSF) = 42.904 PO = 2112.9 RUN NO = 82.000

SECTION (1)MAIN LND GR DR-I DEPENDENT VARIABLE CP

Y/BML	.0760	.3100	.5820	.8530
X/CML				
.050	-.5783	-.0555	-.5956	-.5074
.230	-.1140	-.4279	-.0144	-.1171
.410	-.0447	-.1692	-.0642	-.0839
.590	-.0653	-.0696	-.0653	-.0970
.770	-.0728	-.0685	-.0880	-.0750
.950	-.0945	-.0761	-.0869	-.0663

OA163B MAIN GEAR DOOR INNER SURFACE (RFPF13)

ALPHA (1) = 4.120 BETA (7) = 1.020 Q(PSF) = 42.904 PO = 2112.9 RUN NO = 82.000

SECTION (1)MAIN LND GR DR-I DEPENDENT VARIABLE CP

Y/BML	.0760	.3100	.5820	.8530
X/CML				
.050	-.5732	-.0439	-.5732	-.4701
.230	-.0820	-.4207	.0159	-.1148
.410	-.0406	-.0286	-.0559	-.0733
.590	-.0580	-.0657	-.0548	-.0834
.770	-.0657	-.0591	-.0733	-.0624
.950	-.0885	-.0676	-.0689	-.0493

ALPHA (1) = 4.120 BETA (8) = 2.000 Q(PSF) = 42.904 PO = 2112.9 RUN NO = 82.000

SECTION (1)MAIN LND GR DR-I DEPENDENT VARIABLE CP

Y/BML	.0760	.3100	.5820	.8530
X/CML				
.050	-.5712	-.0254	-.5527	-.4935
.230	-.0526	-.1158	.0203	-.1199
.410	-.0363	-.0210	-.0428	-.0652
.590	-.0526	-.0581	-.0439	-.0713
.770	-.0602	-.0570	-.0570	-.0504
.950	-.0831	-.0592	-.0570	-.0352

ALPHA (1) = 4.120 BETA (9) = 2.990 Q(PSF) = 42.904 PO = 2112.9 RUN NO = 82.000

SECTION (1)MAIN LND GR DR-I DEPENDENT VARIABLE CP

Y/BML	.0760	.3100	.5820	.8530
X/CML				
.050	-.5887	-.4161	-.0220	-.5856
.230	-.0361	-.4096	.0213	-.1225
.410	-.0351	-.0177	-.0351	-.0549
.590	-.0492	-.0535	-.0329	-.0619
.770	-.0568	-.0524	-.0492	-.0394
.950	-.0807	-.0546	-.0470	-.0242

OA163B MAIN GEAR DOOR INNER SURFACE (RFPF13)

ALPHA (1) = 4.120 BETA (10) = 4.070 Q(PSF) = 42.904 PO = 2112.9 RUN NO = 82.000

SECTION (1)MAIN LND GR DR-I DEPENDENT VARIABLE CP

Y/BML	.0760	.3100	.5820	.8530
X/CML				
.050	-.6321	-.4799	-.4788	-.6684
.230	-.0329	-.0297	.0105	-.1186
.410	-.0373	-.0177	-.0253	-.0439
.590	-.0471	-.0482	-.0286	-.0540
.770	-.0558	-.0460	-.0373	-.0329
.950	-.0797	-.0493	-.0395	-.0155

ALPHA (1) = 4.120 BETA (11) = 5.030 Q(PSF) = 42.904 PO = 2112.9 RUN NO = 82.000

SECTION (1)MAIN LND GR DR-I DEPENDENT VARIABLE CP

Y/BML	.0760	.3100	.5820	.8530
X/CML				
.050	-.6138	-.0068	-.0101	-.6553
.230	-.0405	-.0286	-.0427	-.1054
.410	-.0394	-.0253	-.0296	-.0398
.590	-.0470	-.0459	-.0296	-.0468
.770	-.0535	-.0416	-.0329	-.0296
.950	-.0774	-.0503	-.0264	-.0134

OA163B NOSE/MAIN GEAR DOOR PERIMETERS (RFPP01) (27 APR 77)

REFERENCE DATA

SREF = 2690.0000 SQ.FT. XMRP = 1076.7000 IN. XO
LREF = 474.8100 INCHES YMRP = .0000 IN. YO
BREF = 936.6600 INCHES ZMRP = 375.0000 IN. ZO
SCALE = .0405

PARAMETRIC DATA

SPDBRK =	25.000	BDFLAP =	.000
ELV-L =	.000	ELV-R =	.000
PHI-N =	30.800	THETAN =	5.000
PHI-ML =	32.200	THETML =	5.000
PHI-MR =	32.200	THETMR =	5.000

BETA (1) = -5.040 ALPHA (1) = -2.060 Q(PSF) = 42.911 PO = 2119.2 RUN NO = 1.0000

SECTION (1)LND GR DR PRMTRS DEPENDENT VARIABLE CP

DUMMY 1.0000

TAP	
102.000	.9646
171.000	-.4787
176.000	-.2236
181.000	-.5382
183.000	-.2074
186.000	-.2619
192.000	-.3546

BETA (1) = -4.040 ALPHA (2) = .010 Q(PSF) = 42.911 PO = 2119.2 RUN NO = 1.0000

SECTION (1)LND GR DR PRMTRS DEPENDENT VARIABLE CP

DUMMY 1.0000

TAP	
102.000	.9767
171.000	-.4087
176.000	-.1845
181.000	-.4935
183.000	-.1542
186.000	-.2249
192.000	-.3599

BETA (1) = -5.050 ALPHA (3) = 2.070 Q(PSF) = 42.911 PO = 2119.2 RUN NO = 1.0000

SECTION (1)LND GR DR PRMTRS DEPENDENT VARIABLE CP

DUMMY 1.0000

TAP	
102.000	.9707
171.000	-.3615
176.000	-.1394
181.000	-.4197
183.000	-.1082
186.000	-.1966
192.000	-.3437

0A163B NOSE/MAIN GEAR DOOR PERIMETERS (RFPP01)

BETA (1) = -5.060 ALPHA (4) = 6.210 Q(PSF) = 42.91 PO = 2119.2 RUN NO = 1.0000

SECTION (1)LND GR DR PRMTRS DEPENDENT VARIABLE CP

DUMMY 1.0000

TAP	
102.000	.9784
171.000	-.2469
176.000	-.0350
181.000	-.3055
183.000	-.0168
186.000	-.1198
192.000	-.3030

BETA (1) = -5.060 ALPHA (5) = 8.280 Q(PSF) = 42.91 PO = 2119.2 RUN NO = 1.0000

SECTION (1)LND GR DR PRMTRS DEPENDENT VARIABLE CP

DUMMY 1.0000

TAP	
102.000	.9818
171.000	-.1778
176.000	.0113
181.000	-.2443
183.000	.0304
186.000	-.0772
192.000	-.2734

BETA (1) = -5.050 ALPHA (6) = 10.330 Q(PSF) = 42.91 PO = 2119.2 RUN NO = 1.0000

SECTION (1)LND GR DR PRMTRS DEPENDENT VARIABLE CP

DUMMY 1.0000

TAP	
102.000	.9837
171.000	-.1127
176.000	.0532
181.000	-.1787
183.000	.0782
186.000	-.0367
192.000	-.2429

OA163B NOSE/MAIN GEAR DOOR PERIMETERS (RFPP01)

BETA (2) = -4.040 ALPHA (1) = -2.050 Q(PSF) = 42.77 PO = 2119.2 RUN NO = 2.0000

SECTION (1)LND GR DR PRMTRS DEPENDENT VARIABLE CP

DUMMY 1.0000

TAP	
102.000	.9663
171.000	-.4736
176.000	-.2216
181.000	-.5489
183.000	-.2005
186.000	-.2547
192.000	-.3638

BETA (2) = -4.040 ALPHA (2) = .010 Q(PSF) = 42.77 PO = 2119.2 RUN NO = 2.0000

SECTION (1)LND GR DR PRMTRS DEPENDENT VARIABLE CP

DUMMY 1.0000

TAP	
102.000	.9744
171.000	-.4113
176.000	-.1943
181.000	-.4899
183.000	-.1510
186.000	-.2226
192.000	-.3595

BETA (2) = -4.040 ALPHA (3) = 2.070 Q(PSF) = 42.77 PO = 2119.2 RUN NO = 2.0000

SECTION (1)LND GR DR PRMTRS DEPENDENT VARIABLE CP

DUMMY 1.0000

TAP	
102.000	.9778
171.000	-.3606
176.000	-.1412
181.000	-.4324
183.000	-.1048
186.000	-.1918
192.000	-.3434

DATE 27 APR 77 OA163B PRESSURE DATA LISTING (RFPP01)

OA163B NOSE/MAIN GEAR DOOR PERIMETERS

BETA (2) = -4.040 ALPHA (4) = 4.130 Q(PSF) = 42.777 PO = 2119.2 RUN NO = 2.0000

SECTION (1)LND GR DR PRMTRS DEPENDENT VARIABLE CP

DUMMY 1.0000

TAP	
102.000	.9783
171.000	-.3038
176.000	-.0856
181.000	-.3735
183.000	-.0532
186.000	-.1522
192.000	-.3311

BETA (2) = -4.040 ALPHA (5) = 6.180 Q(PSF) = 42.777 PO = 2119.2 RUN NO = 2.0000

SECTION (1)LND GR DR PRMTRS DEPENDENT VARIABLE CP

DUMMY 1.0000

TAP	
102.000	.9830
171.000	-.2459
176.000	-.0290
181.000	-.3084
183.000	-.0078
186.000	-.1167
192.000	-.3090

BETA (2) = -4.040 ALPHA (6) = 8.270 Q(PSF) = 42.777 PO = 2119.2 RUN NO = 2.0000

SECTION (1)LND GR DR PRMTRS DEPENDENT VARIABLE CP

DUMMY 1.0000

TAP	
102.000	.9892
171.000	-.1816
176.000	.0133
181.000	-.2482
183.000	.0386
186.000	-.0724
192.000	-.2744

OA163B NOSE/MAIN GEAR DOOR PERIMETERS (RFPP01)

BETA (3) = -2.960 ALPHA (1) = -2.070 Q(PSF) = 42.885 PO = 2119.2 RUN NO = 3.0000

SECTION (1)LND GR DR PRMTRS DEPENDENT VARIABLE CP

DUMMY 1.0000

TAP	
102.000	.9764
171.000	-.4736
176.000	-.2256
181.000	-.5616
183.000	-.1946
186.000	-.2516
192.000	-.3695

BETA (3) = -2.960 ALPHA (2) = .000 Q(PSF) = 42.885 PO = 2119.2 RUN NO = 3.0000

SECTION (1)LND GR DR PRMTRS DEPENDENT VARIABLE CP

DUMMY 1.0000

TAP	
102.000	.9796
171.000	-.4134
176.000	-.1869
181.000	-.4980
183.000	-.1467
186.000	-.2222
192.000	-.3624

BETA (3) = -2.960 ALPHA (3) = 2.050 Q(PSF) = 42.885 PO = 2119.2 RUN NO = 3.0000

SECTION (1)LND GR DR PRMTRS DEPENDENT VARIABLE CP

DUMMY 1.0000

TAP	
102.000	.9811
171.000	-.3585
176.000	-.1371
181.000	-.4414
183.000	-.0997
186.000	-.1887
192.000	-.3481

OA163B NOSE/MAIN GEAR DOOR PERIMETERS (RFPP01)

BETA (3) = -2.960 ALPHA (4) = 4.130 Q(PSF) = 42.885 PO = 2119.2 RUN NO = 3.0000

SECTION (1)LND GR DR PRMTRS DEPENDENT VARIABLE CP

DUMMY 1.0000

TAP	
102.000	.9814
171.000	-.2952
176.000	-.0854
181.000	-.3759
183.000	-.0501
186.000	-.1469
192.000	-.3341

BETA (3) = -2.960 ALPHA (5) = 6.190 Q(PSF) = 42.885 PO = 2119.2 RUN NO = 3.0000

SECTION (1)LND GR DR PRMTRS DEPENDENT VARIABLE CP

DUMMY 1.0000

TAP	
102.000	.9847
171.000	-.2399
176.000	-.0340
181.000	-.3106
183.000	-.0017
186.000	-.1107
192.000	-.3067

BETA (3) = -2.960 ALPHA (6) = 8.270 Q(PSF) = 42.885 PO = 2119.2 RUN NO = 3.0000

SECTION (1)LND GR DR PRMTRS DEPENDENT VARIABLE CP

DUMMY 1.0000

TAP	
102.000	.9890
171.000	-.1772
176.000	.0092
181.000	-.2554
183.000	.0463
186.000	-.0709
192.000	-.2819

OA163B NOSE/MAIN GEAR DOOR PERIMETERS (RF:-01)

BETA (4) = -2.010 ALPHA (1) = -2.080 Q(PSF) = 42.825 PO = 2114.9 RUN NO = 4.0000

SECTION (1)LND GR DR PRMTRS DEPENDENT VARIABLE CP

DUMMY 1.0000

TAP	
102.000	.9798
171.000	-.4754
176.000	-.2270
181.000	-.5588
183.000	-.1878
186.000	-.2521
192.000	-.3680

BETA (4) = -2.010 ALPHA (2) = -.010 Q(PSF) = 42.825 PO = 2114.9 RUN NO = 4.0000

SECTION (1)LND GR DR PRMTRS DEPENDENT VARIABLE CP

DUMMY 1.0000

TAP	
102.000	.9790
171.000	-.4102
176.000	-.1838
181.000	-.4957
183.000	-.1415
186.000	-.2170
192.000	-.3622

BETA (4) = -2.010 ALPHA (3) = 2.050 Q(PSF) = 42.825 PO = 2114.9 RUN NO = 4.0000

SECTION (1)LND GR DR PRMTRS DEPENDENT VARIABLE CP

DUMMY 1.0000

TAP	
102.000	.9831
171.000	-.3534
176.000	-.1347
181.000	-.4340
183.000	-.0964
186.000	-.1851
192.000	-.3483

OA163B NOSE/MAIN GEAR DOOR PERIMETERS (RFPP01)

BETA (4) = -2.020 ALPHA (4) = 4.140 Q(PSF) = 42.825 PO = 2114.9 RUN NO = 4.0000

SECTION (1)LND GR DR PRMTRS DEPENDENT VARIABLE CP

DUMMY 1.0000

TAP	
102.000	.9887
171.000	-.2916
176.000	-.0865
181.000	-.3784
183.000	-.0441
186.000	-.1451
192.000	-.3334

BETA (4) = -2.020 ALPHA (5) = 6.220 Q(PSF) = 42.825 PO = 2114.9 RUN NO = 4.0000

SECTION (1)LND GR DR PRMTRS DEPENDENT VARIABLE CP

DUMMY 1.0000

TAP	
102.000	.9870
171.000	-.2301
176.000	-.0391
181.000	-.3180
183.000	.0022
186.000	-.1038
192.000	-.3059

BETA (4) = -2.020 ALPHA (6) = 8.280 Q(PSF) = 42.825 PO = 2114.9 RUN NO = 4.0000

SECTION (1)LND GR DR PRMTRS DEPENDENT VARIABLE CP

DUMMY 1.0000

TAP	
102.000	.9894
171.000	-.1739
176.000	.0063
181.000	-.2645
183.000	.0506
186.000	-.0672
192.000	-.2819

OA163B NOSE/MAIN GEAR DOOR PERIMETERS (RFPP01)

BETA (5) = -1.020 ALPHA (1) = -2.080 Q(PSF) = 42.520 PO = 2115.0 RUN NO = 5.0000

SECTION (1)LND GR DR PRMTRS DEPENDENT VARIABLE CP

DUMMY 1.0000

TAP	
102.000	.9869
171.000	-.4736
176.000	-.2292
181.000	-.5548
183.000	-.1911
186.000	-.2522
192.000	-.3799

BETA (5) = -1.020 ALPHA (2) = .010 Q(PSF) = 42.520 PO = 2115.0 RUN NO = 5.0000

SECTION (1)LND GR DR PRMTRS DEPENDENT VARIABLE CP

DUMMY 1.0000

TAP	
102.000	.9844
171.000	-.4039
176.000	-.1841
181.000	-.4865
183.000	-.1378
186.000	-.2174
192.000	-.3689

BETA (5) = -1.020 ALPHA (3) = 2.070 Q(PSF) = 42.520 PO = 2115.0 RUN NO = 5.0000

SECTION (1)LND GR DR PRMTRS DEPENDENT VARIABLE CP

DUMMY 1.0000

TAP	
102.000	9871
171.000	-.3435
176.000	-.1318
181.000	-.4332
183.000	-.0884
186.000	-.1822
192.000	-.3545

OA163B NOSE/MAIN GEAR DOOR PERIMETERS (RFPP01)

BETA (5) = -1.020 ALPHA (4) = 4.130 Q(PSF) = 42.920 PO = 2115.0 RUN NO = 5.0000

SECTION (1)LND GR DR PRMTRS DEPENDENT VARIABLE CP

DUMMY 1.0000

TAP	
102.000	.9845
171.000	-.2879
176.000	-.0871
181.000	-.3743
183.000	-.0399
186.000	-.1403
192.000	-.3328

BETA (5) = -1.030 ALPHA (5) = 6.180 Q(PSF) = 42.920 PO = 2115.0 RUN NO = 5.0000

SECTION (1)LND GR DR PRMTRS DEPENDENT VARIABLE CP

DUMMY 1.0000

TAP	
102.000	.9864
171.000	-.2264
176.000	-.0400
181.000	-.3261
183.000	.0093
186.000	-.1025
192.000	-.3085

BETA (5) = -1.030 ALPHA (6) = 8.260 Q(PSF) = 42.920 PO = 2115.0 RUN NO = 5.0000

SECTION (1)LND GR DR PRMTRS DEPENDENT VARIABLE CP

DUMMY 1.0000

TAP	
102.000	.9914
171.000	-.1622
176.000	-.0027
181.000	-.2665
183.000	.0554
186.000	-.0649
192.000	-.2796

OA163B NOSE/MAIN GEAF DOOR PERIMETERS (RFPP01)

BETA (6) = .000 ALPHA (1) = -2.050 Q(PSF) = 43.418 PO = 2113.6 RUN NO = 6.0000

SECTION (1)LND GR DR PRMTRS DEPENDENT VARIABLE (P

DUMMY 1.0000

TAP	
102.000	.9789
171.000	-.4561
176.000	-.2244
181.000	-.5400
183.000	-.1825
186.000	-.2454
192.000	-.3822

BETA (6) = .000 ALPHA (2) = .000 Q(PSF) = 43.418 PO = 2113.6 RUN NO = 6.0000

SECTION (1)LND GR DR PRMTRS DEPENDENT VARIABLE (P

DUMMY 1.0000

TAP	
102.000	.9822
171.000	-.4006
176.000	-.1852
181.000	-.4833
183.000	-.1373
186.000	-.2171
192.000	-.3757

BETA (6) = .000 ALPHA (3) = 2.060 Q(PSF) = 43.418 PO = 2113.6 RUN NO = 6.0000

SECTION (1)LND GR DR PRMTRS DEPENDENT VARIABLE (P

DUMMY 1.0000

TAP	
102.000	.9770
171.000	-.3412
176.000	-.1341
181.000	-.4248
183.000	-.0863
186.000	-.1789
192.000	-.3536

OA163B NOSE/MAIN GEAR DOOR PERIMETERS (RFPP01)

BETA (6) = .000 ALPHA (4) = 4.110 Q(PSF) = 43.418 PO = 2113.6 RUN NO = 6.0000

SECTION (1)LND GR DR PRMTRS DEPENDENT VARIABLE CP

DUMMY 1.0000

TAP	
102.000	.9729
171.000	-.2796
176.000	-.0870
181.000	-.3739
183.000	-.0334
186.000	-.1416
192.000	-.3300

BETA (6) = .000 ALPHA (5) = 6.200 Q(PSF) = 43.418 PO = 2113.6 RUN NO = 6.0000

SECTION (1)LND GR DR PRMTRS DEPENDENT VARIABLE CP

DUMMY 1.0000

TAP	
102.000	.9698
171.000	-.2028
176.000	-.0403
181.000	-.3177
183.000	.0131
186.000	-.0997
192.000	-.3057

BETA (6) = .000 ALPHA (6) = 8.280 Q(PSF) = 43.418 PO = 2113.6 RUN NO = 6.0000

SECTION (1)LND GR DR PRMTRS DEPENDENT VARIABLE CP

DUMMY 1.0000

TAP	
102.000	.9710
171.000	-.1293
176.000	.0012
181.000	-.2698
183.000	.0615
186.000	-.0630
192.000	-.2734

OA163B NOSE/MAIN GEAR DOOR PERIMETERS (RFPP01)

BETA (7) = 1.000 ALPHA (1) = -2.060 Q(PSF) = 43.623 PO = 2113.6 RUN NO = 7.0000

SECTION (1)LND GR DR PRMTRS DEPENDENT VARIABLE CP

DUMMY 1.0000

TAP	
102.000	.9692
171.000	-.4579
176.000	-.2209
181.000	-.5389
183.000	-.1834
186.000	-.2466
192.000	-.3874

BETA (7) = 1.000 ALPHA (2) = .000 Q(PSF) = 43.623 PO = 2113.6 RUN NO = 7.0000

SECTION (1)LND GR DR PRMTRS DEPENDENT VARIABLE CP

DUMMY 1.0000

TAP	
102.000	.9657
171.000	-.4051
176.000	-.1772
181.000	-.4820
183.000	-.1358
186.000	-.2118
192.000	-.3657

BETA (7) = 1.000 ALPHA (3) = 2.060 Q(PSF) = 43.623 PO = 2113.6 RUN NO = 7.0000

SECTION (1)LND GR DR PRMTRS DEPENDENT VARIABLE CP

DUMMY 1.0000

TAP	
102.000	.9669
171.000	-.3426
176.000	-.1376
181.000	-.4214
183.000	-.0834
186.000	-.1751
192.000	-.3453

OA163B NOSE/MAIN GEAR DOOR PERIMETERS (RFPP01)

BETA (7) = 1.000 ALPHA (4) = 4.110 Q(PSF) = 43.623 PO = 2113.6 RUN NO = 7.0000

SECTION (1)LND GR DR PRMTRS DEPENDENT VARIABLE CP

DUMMY 1.0000

TAP	
102.000	.9613
171.000	-.2782
176.000	-.0991
181.000	-.3688
183.000	-.0322
186.000	-.1385
192.000	-.3132

BETA (7) = 1.000 ALPHA (5) = 6.190 Q(PSF) = 43.623 PO = 2113.6 RUN NO = 7.0000

SECTION (1)LND GR DR PRMTRS DEPENDENT VARIABLE CP

DUMMY 1.0000

TAP	
102.000	.9651
171.000	-.2052
176.000	-.0498
181.000	-.3222
183.000	.0150
186.000	-.0970
192.000	-.2788

BETA (7) = 1.000 ALPHA (6) = 8.260 Q(PSF) = 43.623 PO = 2113.6 RUN NO = 7.0000

SECTION (1)LND GR DR PRMTRS DEPENDENT VARIABLE CP

DUMMY 1.0000

TAP	
102.000	.9605
171.000	-.1402
176.000	-.0007
181.000	-.2718
183.000	.0601
186.000	-.0537
192.000	-.2315

OA163B NOSE/MAIN GEAR DOOR PERIMETERS (RFPP01)

BETA (8) = 1.980 ALPHA (1) = -2.070 Q(PSF) = 43.017 PO = 2113.6 RUN NO = 8.0000

SECTION (1)LND GR DR PRMTRS DEPENDENT VARIABLE CP

DUMMY 1.0000

TAP	
102.000	.9614
171.000	-.4469
176.000	-.2106
181.000	-.5470
183.000	-.1811
186.000	-.2449
192.000	-.3894

BETA (8) = 1.980 ALPHA (2) = -.010 Q(PSF) = 43.017 PO = 2113.6 RUN NO = 8.0000

SECTION (1)LND GR DR PRMTRS DEPENDENT VARIABLE CP

DUMMY 1.0000

TAP	
102.000	.9887
171.000	-.4127
176.000	-.1724
181.000	-.4986
183.000	-.1360
186.000	-.2148
192.000	-.3732

BETA (8) = 1.980 ALPHA (3) = 2.060 Q(PSF) = 43.017 PO = 2113.6 RUN NO = 8.0000

SECTION (1)LND GR DR PRMTRS DEPENDENT VARIABLE CP

DUMMY 1.0000

TAP	
102.000	.9875
171.000	-.3519
176.000	-.1315
181.000	-.4344
183.000	-.0842
186.000	-.1788
192.000	-.3478

OA163B NOSE/MAIN GEAR DOOR PERIMETERS (RFPP01)

BETA (8) = 1.980 ALPHA (4) = 4.120 Q(PSF) = 43.017 PO = 2113.6 RUN NO = 8.0000

SECTION (1)LND GR DR PRMTRS DEPENDENT VARIABLE CP

DUMMY 1.0000

TAP	
102.000	.9871
171.000	-.2887
176.000	-.0883
181.000	-.3813
183.000	-.0309
186.000	-.1417
192.000	-.3192

BETA (8) = 1.980 ALPHA (5) = 6.180 Q(PSF) = 43.017 PO = 2113.6 RUN NO = 8.0000

SECTION (1)LND GR DR PRMTRS DEPENDENT VARIABLE CP

DUMMY 1.0000

TAP	
102.000	.9828
171.000	-.2188
176.000	-.0350
181.000	-.3259
183.000	.0174
186.000	-.0987
192.000	-.2803

BETA (8) = 1.980 ALPHA (6) = 8.280 Q(PSF) = 43.017 PO = 2113.6 RUN NO = 8.0000

SECTION (1)LND GR DR PRMTRS DEPENDENT VARIABLE CP

DUMMY 1.0000

TAP	
102.000	.9817
171.000	-.1516
176.000	.0324
181.000	-.2734
183.000	.0686
186.000	-.0651
192.000	-.2517

OA163B NOSE/MAIN GEAR DOOR PERIMETERS (RFPP01)

BETA (9) = 2.990 ALPHA (1) = -2.060 Q(PSF) = 42.788 PO = 2113.6 RUN NO = 9.0000

SECTION (1)LND GR DR PRMTRS DEPENDENT VARIABLE CP

DUMMY 1.0000

TAP	
102.000	.9820
171.000	-.4618
176.000	-.2000
181.000	-.5755
183.000	-.1809
186.000	-.2484
192.000	-.3949

BETA (9) = 2.990 ALPHA (2) = .000 Q(PSF) = 42.788 PO = 2113.6 RUN NO = 9.0000

SECTION (1)LND GR DR PRMTRS DEPENDENT VARIABLE CP

DUMMY 1.0000

TAP	
102.000	.9815
171.000	-.4097
176.000	-.[illegible]
181.000	-.5074
183.000	-.1286
186.000	-.2133
192.000	-.3795

BETA (9) = 2.990 ALPHA (3) = 2.080 Q(PSF) = 42.788 PO = 2113.6 RUN NO = 9.0000

SECTION (1)LND GR DR PRMTRS DEPENDENT VARIABLE CP

DUMMY 1.0000

TAP	
102.000	.9822
171.000	-.3560
176.000	-.1026
181.000	-.4428
183.000	-.0784
186.000	-.1764
192.000	-.3549

DATE 27 APR 77 OA163B PRESSURE DATA LISTING (RFPP01)

OA163B NOSE/MAIN GEAR DOOR PERIMETERS

BETA (9) = 2.990 ALPHA (4) = 4.120 Q(PSF) = 42.788 PO = 2113.6 RUN NO = 9.0000

SECTION (1)LND GR DR PRMTRS DEPENDENT VARIABLE CP

DUMMY 1.0000

TAP	
102.000	.9763
171.000	-.3012
176.000	-.0622
181.000	-.3879
183.000	-.0309
186.000	-.1408
192.000	-.3280

BETA (9) = 2.990 ALPHA (5) = 6.200 Q(PSF) = 42.788 PO = 2113.6 RUN NO = 9.0000

SECTION (1)LND GR DR PRMTRS DEPENDENT VARIABLE CP

DUMMY 1.0000

TAP	
102.000	.9780
171.000	-.2151
176.000	-.0189
181.000	-.3344
183.000	.0204
186.000	-.1018
192.000	-.2939

BETA (9) = 2.990 ALPHA (6) = 8.260 Q(PSF) = 42.788 PO = 2113.6 RUN NO = 9.0000

SECTION (1)LND GR DR PRMTRS DEPENDENT VARIABLE CP

DUMMY 1.0000

TAP	
102.000	.9760
171.000	-.1137
176.000	.0275
181.000	-.2782
183.000	.0658
186.000	-.0582
192.000	-.2572

OA163B NOSE/MAIN GEAR DOOR PERIMETERS (RFPP01)

BETA (10) = 4.050 ALPHA (1) = -2.060 Q(PSF) = 42.907 PO = 2113.7 RUN NO = 10.000

SECTION (1)LND GR DR PRMTRS DEPENDENT VARIABLE CP

DUMMY 1.0000

TAP	
102.000	.9828
171.000	-.4549
176.000	-.1832
181.000	-.5943
183.000	-.1782
186.000	-.2423
192.000	-.3945

BETA (10) = 4.040 ALPHA (2) = .000 Q(PSF) = 42.907 PO = 2113.7 RUN NO = 10.000

SECTION (1)LND GR DR PRMTRS DEPENDENT VARIABLE CP

DUMMY 1.0000

TAP	
102.000	.9832
171.000	-.4180
176.000	-.1385
181.000	-.5326
183.000	-.1304
186.000	-.2098
192.000	-.3896

BETA (10) = 4.040 ALPHA (3) = 2.050 Q(PSF) = 42.907 PO = 2113.7 RUN NO = 10.000

SECTION (1)LND GR DR PRMTRS DEPENDENT VARIABLE CP

DUMMY 1.0000

TAP	
102.000	.9799
171.000	-.3638
176.000	-.0993
181.000	-.4744
183.000	-.0812
186.000	-.1777
192.000	-.3705

OA163B NOSE/MAIN GEAR DOOR PERIMETERS (RFPP01)

BETA (10) = 4.050 ALPHA (4) = 4.110 Q(PSF) = 42.907 PO = 2113.7 RUN NO = 10.000

SECTION (1)LND GR DR PRMTRS DEPENDENT VARIABLE CP

DUMMY 1.0000

TAP	
102.000	.9758
171.000	-.2775
176.000	-.0561
181.000	-.4093
183.000	-.0309
186.000	-.1396
192.000	-.3407

BETA (10) = 4.050 ALPHA (5) = 6.210 Q(PSF) = 42.907 PO = 2113.7 RUN NO = 10.000

SECTION (1)LND GR DR PRMTRS DEPENDENT VARIABLE CP

DUMMY 1.0000

TAP	
102.000	.9712
171.000	-.1672
176.000	-.0118
181.000	-.3458
183.000	.0234
186.000	-.0996
192.000	-.3042

BETA (10) = 4.050 ALPHA (6) = 8.280 Q(PSF) = 42.907 PO = 2113.7 RUN NO = 10.000

SECTION (1)LND GR DR PRMTRS DEPENDENT VARIABLE CP

DUMMY 1.0000

TAP	
102.000	.9713
171.000	-.0862
176.000	.0364
181.000	-.2812
183.000	.0726
186.000	-.0580
192.000	-.2671

OA163B NOSE/MAIN GEAR DOOR PERIMETERS (RFPP01)

BETA (11) = 5.010 ALPHA (1) = -2.070 Q(PSF) = 42.887 PO = 2113.6 RUN NO = 11.000

SECTION (1)LND GR DR PRMTRS DEPENDENT VARIABLE CP

DUMMY 1.0000

TAP	
102.000	.9842
171.000	-.4526
176.000	-.1738
181.000	-.6449
183.000	-.1768
186.000	-.2402
192.000	-.4056

BETA (11) = 5.010 ALPHA (2) = .010 Q(PSF) = 42.887 PO = 2113.6 RUN NO = 11.000

SECTION (1)LND GR DR PRMTRS DEPENDENT VARIABLE CP

DUMMY 1.0000

TAP	
102.000	.9788
171.000	-.4141
176.000	-.1335
181.000	-.5750
183.000	-.1315
186.000	-.2069
192.000	-.3946

BETA (11) = 5.010 ALPHA (3) = 2.050 Q(PSF) = 42.887 PO = 2113.6 RUN NO = 11.000

SECTION (1)LND GR DR PRMTRS DEPENDENT VARIABLE CP

DUMMY 1.0000

TAP	
102.000	.9776
171.000	-.3393
176.000	-.0921
181.000	-.5040
183.000	-.0811
186.000	-.1745
192.000	-.3821

OA163B NOSE/MAIN GEAR DOOR PERIMETERS (RFPP01)

BETA (11) = 5.010 ALPHA (4) = 4.130 Q(PSF) = 42.887 PO = 2113.6 RUN NO = 11.000

SECTION (1)LND GR DR PRMTRS DEPENDENT VARIABLE CP

DUMMY 1.0000

TAP	
102.000	.9704
171.000	-.2253
176.000	-.0460
181.000	-.4317
183.000	-.0279
186.000	-.1336
192.000	-.3553

BETA (11) = 5.010 ALPHA (5) = 6.180 Q(PSF) = 42.887 PO = 2113.6 RUN NO = 11.000

SECTION (1)LND GR DR PRMTRS DEPENDENT VARIABLE CP

DUMMY 1.0000

TAP	
102.000	.9720
171.000	-.1417
176.000	-.0007
181.000	-.3624
183.000	.0234
186.000	-.0984
192.000	-.3242

BETA (11) = 5.010 ALPHA (6) = 8.250 Q(PSF) = 42.887 PO = 2113.6 RUN NO = 11.000

SECTION (1)LND GR DR PRMTRS DEPENDENT VARIABLE CP

DUMMY 1.0000

TAP	
102.000	.9665
171.000	-.0863
176.000	.0505
181.000	-.2997
183.000	.0868
186.000	-.0651
192.000	-.3131

OA163B NOSE/MAIN GEAR DOOR PERIMETERS (RFPP02) (27 APR 77)

REFERENCE DATA

SREF = 2690.0000 SQ.FT. XMRP = 1076.7000 IN. XO
LREF = 474.8100 INCHES YMRP = .0000 IN. YO
BREF = 936.6800 INCHES ZMRP = 375.0000 IN. ZO
SCALE = .0405

PARAMETRIC DATA

SPDBRK =	25.000	BDFLAP =	.000
ELV-L =	.000	ELV-R =	.000
PHI-N =	30.800	THETAN =	5.000
PHI-ML =	36.800	THETML =	5.600
PHI-MR =	36.000	THETMR =	5.600

BETA (1) = -5.050 ALPHA (1) = -2.070 Q(PSF) = 42.822 PO = 2113.6 RUN NO = 12.000

SECTION (1)LND GR DR PRMTRS DEPENDENT VARIABLE CP

DUMMY 1.0000

TAP	
102.000	.9624
171.000	-.4732
176.000	-.2223
181.000	-.5377
183.000	-.2052
186.000	-.2606
192.000	-.3506

BETA (1) = -5.050 ALPHA (2) = -.010 Q(PSF) = 42.822 PO = 2113.6 RUN NO = 12.000

SECTION (1)LND GR DR PRMTRS DEPENDENT VARIABLE CP

DUMMY 1.0000

TAP	
102.000	.9661
171.000	-.4103
176.000	-.1828
181.000	-.4777
183.000	-.1597
186.000	-.2281
192.000	-.3514

BETA (1) = -5.050 ALPHA (3) = 2.060 Q(PSF) = 42.822 PO = 2113.6 RUN NO = 12.000

SECTION (1)LND GR DR PRMTRS DEPENDENT VARIABLE CP

DUMMY 1.0000

TAP	
102.000	.9754
171.000	-.3576
176.000	-.1432
181.000	-.4203
183.000	-.1029
186.000	-.1968
192.000	-.3446

OA163B NOSE/MAIN GEAR DOOR PERIMETERS (RFPP02)

BETA (1) = -5.050 ALPHA (4) = 4.120 Q(PSF) = 42.822 PO = 2113.6 RUN NO = 12.000

SECTION (1)LND GR DR PRMTRS DEPENDENT VARIABLE CP

DUMMY 1.0000

TAP	
102.000	.9760
171.000	-.2994
176.000	-.0875
181.000	-.3630
183.000	-.0602
186.000	-.1591
192.000	-.3247

BETA (1) = -5.050 ALPHA (5) = 6.220 Q(PSF) = 42.822 PO = 2113.6 RUN NO = 12.000

SECTION (1)LND GR DR PRMTRS DEPENDENT VARIABLE CP

DUMMY 1.0000

TAP	
102.000	.9793
171.000	-.2399
176.000	-.0349
181.000	-.3052
183.000	-.0178
186.000	-.1203
192.000	-.3054

BETA (1) = -5.050 ALPHA (6) = 8.270 Q(PSF) = 42.822 PO = 2113.6 RUN NO = 12.000

SECTION (1)LND GR DR PRMTRS DEPENDENT VARIABLE CP

DUMMY 1.0000

TAP	
102.000	.9825
171.000	-.1762
176.000	.0093
181.000	-.2437
183.000	.0296
186.000	-.0804
192.000	-.2751

0A163B NOSE/MAIN GEAR DOOR PERIMETERS (RFPP02)

BETA (2) = -4.040 ALPHA (1) = -2.030 Q(PSF) = 42.870 PO = 2113.6 RUN NO = 13.000

SECTION (1)LND GR DR PRMTRS DEPENDENT VARIABLE CP

DUMMY 1.0000

TAP	
102.000	.9678
171.000	-.4628
176.000	-.2232
181.000	-.5474
183.000	-.2011
186.000	-.2554
192.000	-.3649

BETA (2) = -4.040 ALPHA (2) = .020 Q(PSF) = 42.870 PO = 2113.6 RUN NO = 13.000

SECTION (1)LND GR DR PRMTRS DEPENDENT VARIABLE CP

DUMMY 1.0000

TAP	
102.000	.9730
171.000	-.4051
176.000	-.1848
181.000	-.4896
183.000	-.1536
186.000	-.2250
192.000	-.3586

BETA (2) = -4.040 ALPHA (3) = 2.060 Q(PSF) = 42.870 PO = 2113.6 RUN NO = 13.000

SECTION (1)LND GR DR PRMTRS DEPENDENT VARIABLE CP

DUMMY 1.0000

TAP	
102.000	.9782
171.000	-.3574
176.000	-.1430
181.000	-.4360
183.000	-.1045
186.000	-.1932
192.000	-.3471

OA163B NOSE/MAIN GEAR DOOR PERIMETERS (RFPP02)

BETA (2) = -4.040 ALPHA (4) = 4.140 Q(PSF) = 42.870 PO = 2113.6 RUN NO = 13.000

SECTION (1)LND GR DR PRMTRS DEPENDENT VARIABLE CP

DUMMY 1.0000

TAP	
102.000	.9865
171.000	-.2986
176.000	-.0832
181.000	-.3721
183.000	-.0540
186.000	-.1537
192.000	-.3322

BETA (2) = -4.040 ALPHA (5) = 6.220 Q(PSF) = 42.870 PO = 2113.6 RUN NO = 13.000

SECTION (1)LND GR DR PRMTRS DEPENDENT VARIABLE CP

DUMMY 1.0000

TAP	
102.000	.9859
171.000	-.2343
176.000	-.0339
181.000	-.3129
183.000	-.0077
186.000	-.1145
192.000	-.3072

BETA (2) = -4.050 ALPHA (6) = 8.270 Q(PSF) = 42.870 PO = 2113.6 RUN NO = 13.000

SECTION (1)LND GR DR PRMTRS DEPENDENT VARIABLE CP

DUMMY 1.0000

TAP	
102.000	.9841
171.000	-.1748
176.000	.0133
181.000	-.2463
183.000	.0395
186.000	-.0732
192.000	-.2781

OA163B NOSE/MAIN GEAR DOOR PERIMETERS (RFPP02)

BETA (3) = -2.970 ALPHA (1) = -2.060 Q(PSF) = 42.832 PO = 2113.6 RUN NO = 14.000

SECTION (1)LND GR DR PRMTRS DEPENDENT VARIABLE CP

DUMMY 1.0000

TAP	
102.000	.9789
171.000	-.4630
176.000	-.2278
181.000	-.5640
183.000	-.1955
186.000	-.2551
192.000	-.3682

BETA (3) = -2.970 ALPHA (2) = .010 Q(PSF) = 42.832 PO = 2113.6 RUN NO = 14.000

SECTION (1)LND GR DR PRMTRS DEPENDENT VARIABLE CP

DUMMY 1.0000

TAP	
102.000	.9798
171.000	-.4090
176.000	-.1908
181.000	-.4985
183.000	-.1475
186.000	-.2229
192.000	-.3572

BETA (3) = -2.970 ALPHA (3) = 2.070 Q(PSF) = 42.832 PO = 2113.6 RUN NO = 14.000

SECTION (1)LND GR DR PRMTRS DEPENDENT VARIABLE CP

DUMMY 1.0000

TAP	
102.000	.9811
171.000	-.3506
176.000	-.1358
181.000	-.4393
183.000	-.0975
186.000	-.1872
192.000	-.3497

OA163B NOSE/MAIN GEAR DOOR PERIMETERS (RFPP02)

BETA (3) = -2.970 ALPHA (4) = 4.130 Q(PSF) = 42.832 PO = 2113.6 RUN NO = 14.000

SECTION (1)LND GR DR PRMTRS DEPENDENT VARIABLE CP

DUMMY 1.0000

TAP	
102.000	.9843
171.000	-.2940
176.000	-.0833
181.000	-.3756
183.000	-.0501
186.000	-.1509
192.000	-.3327

BETA (3) = -2.970 ALPHA (5) = 6.200 Q(PSF) = 42.832 PO = 2113.6 RUN NO = 14.000

SECTION (1)LND GR DR PRMTRS DEPENDENT VARIABLE CP

DUMMY 1.0000

TAP	
102.000	.9652
171.000	-.2314
176.000	-.0309
181.000	-.3130
183.000	-.0037
186.000	-.1095
192.000	-.3049

BETA (3) = -2.970 ALPHA (6) = 8.280 Q(PSF) = 42.832 PO = 2113.6 RUN NO = 14.000

SECTION (1)LND GR DR PRMTRS DEPENDENT VARIABLE CP

DUMMY 1.0000

TAP	
102.000	.9860
171.000	-.1709
176.000	.0093
181.000	-.2525
183.000	.0455
186.000	-.0682
192.000	-.2771

C-5-

OA163B NOSE/MAIN GEAR DOOR PERIMETERS (RFPP02)

BETA (4) = -2.040 ALPHA (1) = -2.060 Q(PSF) = 42.852 PO = 2113.6 RUN NO = 15.000

SECTION (1)LND GR DR PRMTRS DEPENDENT VARIABLE CP

DUMMY 1.0000

TAP	
102.000	.9776
171.000	-.4680
176.000	-.2283
181.000	-.5546
183.000	-.1900
186.000	-.2515
192.000	-.3674

BETA (4) = -2.030 ALPHA (2) = .010 Q(PSF) = 42.852 PO = 2113.6 RUN NO = 15.000

SECTION (1)LND GR DR PRMTRS DEPENDENT VARIABLE CP

DUMMY 1.0000

TAP	
102.000	.9830
171.000	-.4053
176.000	-.1863
181.000	-.4971
183.000	-.1420
186.000	-.2196
192.000	-.3608

BETA (4) = -2.040 ALPHA (3) = 2.080 Q(PSF) = 42.852 PO = 2113.6 RUN NO = 15.000

SECTION (1)LND GR DR PRMTRS DEPENDENT VARIABLE CP

DUMMY 1.0000

TAP	
102.000	.9884
171.000	-.3476
176.000	-.1369
181.000	-.4363
183.000	-.0945
186.000	-.1862
192.000	-.3510

OA163B NOSE/MAIN GEAR DOOR PERIMETERS (RFPP02)

BETA (4) = -2.040 ALPHA (4) = 4.120 Q(PSF) = 42.852 PO = 2113.6 RUN NO = 15.000

SECTION (1)LND GR DR PRMTRS DEPENDENT VARIABLE CP

DUMMY 1.0000

TAP	
102.000	.9841
171.000	-.2868
176.000	-.0870
181.000	-.3752
183.000	-.0459
186.000	-.1453
192.000	-.3326

BETA (4) = -2.040 ALPHA (5) = 6.200 Q(PSF) = 42.852 PO = 2113.6 RUN NO = 15.000

SECTION (1)LND GR DR PRMTRS DEPENDENT VARIABLE CP

DUMMY 1.0000

TAP	
102.000	.9854
171.000	-.2262
176.000	-.0379
181.000	-.3198
183.000	.0032
186.000	-.1054
192.000	-.3070

BETA (4) = -2.040 ALPHA (6) = 8.290 Q(PSF) = 42.852 PO = 2113.6 RUN NO = 15.000

SECTION (1)LND GR DR PRMTRS DEPENDENT VARIABLE CP

DUMMY 1.0000

TAP	
102.000	.9834
171.000	-.1640
176.000	.0103
181.000	-.2628
183.000	.0546
186.000	-.0642
192.000	-.2762

DATE 27 APR 77 0A163B PRESSURE DATA LISTING

0A163B NOSE/MAIN GEAR DOOR PERIMETERS (RFPP02)

BETA (5) = -1.030 ALPHA (1) = -2.040 Q(PSF) = 12.897 PO = 2113.7 RUN NO = 16.000

SECTION (1)LND GR DR PRMTRS DEPENDENT VARIABLE CP

DUMMY 1.0000

TAP	
102.000	.9825
171.000	-.4623
176.000	-.2265
181.000	-.5496
183.000	-.1884
186.000	-.2496
192.000	-.3769

BETA (5) = -1.040 ALPHA (2) = .020 Q(PSF) = 12.897 PO = 2113.7 RUN NO = 16.000

SECTION (1)LND GR DR PRMTRS DEPENDENT VARIABLE CP

DUMMY 1.0000

TAP	
102.000	.9803
171.000	-.3956
176.000	-.1770
181.000	-.4722
183.000	-.1337
186.000	-.2143
192.000	-.3627

BETA (5) = -1.040 ALPHA (3) = 2.060 Q(PSF) = 12.897 PO = 2113.7 RUN NO = 16.000

SECTION (1)LND GR DR PRMTRS DEPENDENT VARIABLE CP

DUMMY 1.0000

TAP	
102.000	1.0008
171.000	-.3477
176.000	-.1369
181.000	-.4375
183.000	-.0905
186.000	-.1843
192.000	-.3680

OA163B NOSE/MAIN GEAR DOOR PERIMETERS (RFPP02)

BETA (5) = -1.030 ALPHA (4) = 4.120 Q(PSF) = 42.897 PO = 2113.7 RUN NO = 16.000

SECTION (1)LND GR DR PRMTRS DEPENDENT VARIABLE CP

DUMMY 1.0000

TAP	
102.000	.9855
171.000	-.2782
176.000	-.0902
181.000	-.3767
183.000	-.0389
186.000	-.1425
192.000	-.3367

BETA (5) = -1.040 ALPHA (5) = 6.200 Q(PSF) = 42.897 PO = 2113.7 RUN NO = 16.000

SECTION (1)LND GR DR PRMTRS DEPENDENT VARIABLE CP

DUMMY 1.0000

TAP	
102.000	.9887
171.000	-.2166
176.000	-.0431
181.000	-.3265
183.000	.0093
186.000	-.1056
192.000	-.3089

BETA (5) = -1.040 ALPHA (6) = 8.270 Q(PSF) = 42.897 PO = 2113.7 RUN NO = 16.000

SECTION (1)LND GR DR PRMTRS DEPENDENT VARIABLE CP

DUMMY 1.0000

TAP	
102.000	.9867
171.000	-.1572
176.000	.0022
181.000	-.2675
183.000	.0574
186.000	-.0639
192.000	-.2772

OA163B NOSE/MAIN GEAR DOOR PERIMETERS (*FPP02)

BETA (6) = .000 ALPHA (1) = -2.060 Q(PSF) = 42.860 PO = 2113.7 RUN NO = 17.000

SECTION (1)LND GR DR PRMTRS DEPENDENT VARIABLE CP

DUMMY 1.0000

TAP	
102.000	.9859
171.000	-.4522
176.000	-.2285
181.000	-.5445
183.000	-.1863
186.000	-.2475
192.000	-.3864

BETA (6) = -.010 ALPHA (2) = .020 Q(PSF) = 42.860 PO = 2113.7 RUN NO = 17.000

SECTION (1)LND GR DR PRMTRS DEPENDENT VARIABLE CP

DUMMY 1.0000

TAP	
102.000	.9881
171.000	-.3979
176.000	-.1827
181.000	-.4834
183.000	-.1375
186.000	-.2199
192.000	-.3776

BETA (6) = -.010 ALPHA (3) = 2.060 Q(PSF) = 42.860 PO = 2113.7 RUN NO = 17.000

SECTION (1)LND GR DR PRMTRS DEPENDENT VARIABLE CP

DUMMY 1.0000

TAP	
102.000	.9877
171.000	-.3387
176.000	-.1379
181.000	-.4305
183.000	-.0865
186.000	-.1823
192.000	-.3584

OA163B NOSE/MAIN GEAR DOOR PERIMETERS (RFPP02)

BETA (6) = -.010 ALPHA (4) = 4.140 Q(PSF) = 2.860 PO = 2113.7 RUN NO = 17.000

SECTION (1)LND GR DR PRMTRS DEPENDENT VARIABLE CP

DUMMY 1.0000

TAP	
102.000	.9906
171.000	-.2769
176.000	-.0918
181.000	-.3862
183.000	-.0371
186.000	-.1464
192.000	-.3376

BETA (6) = -.010 ALPHA (5) = 6.200 Q(PSF) = 2.860 PO = 2113.7 RUN NO = 17.000

SECTION (1)LND GR DR PRMTRS DEPENDENT VARIABLE CP

DUMMY 1.0000

TAP	
102.000	.9838
171.000	-.2097
176.000	-.0409
181.000	-.3253
183.000	.0153
186.000	-.1042
192.000	-.3089

BETA (6) = -.010 ALPHA (6) = 8.270 Q(PSF) = 2.860 PO = 2113.7 RUN NO = 17.000

SECTION (1)LND GR DR PRMTRS DEPENDENT VARIABLE CP

DUMMY 1.0000

TAP	
102.000	.9889
171.000	-.1297
176.000	-.0007
181.000	-.2738
183.000	.0607
186.000	-.0632
192.000	-.2809

DATE 27 APR 77 OA163B PRESSURE DATA LISTING (RFPP02)

OA163B NOSE/MAIN GEAR DOOR PERIMETERS

BETA (7) = .980 ALPHA (1) = -2.070 Q(PSF) = 42.917 PO = 2113.7 RUN NO = 18.000

SECTION (1)LND GR DR PRMTRS DEPENDENT VARIABLE CP

DUMMY 1.0000

TAP	
102.000	.9881
171.000	-.4602
176.000	-.2284
181.000	-.5484
183.000	-.1893
186.000	-.2525
192.000	-.3947

BETA (7) = .980 ALPHA (2) = .020 Q(PSF) = 42.917 PO = 2113.7 RUN NO = 18.000

SECTION (1)LND GR DR PRMTRS DEPENDENT VARIABLE CP

DUMMY 1.0000

TAP	
102.000	.9901
171.000	-.4068
176.000	-.1826
181.000	-.4932
183.000	-.1394
186.000	-.2168
192.000	-.3751

BETA (7) = .980 ALPHA (3) = 2.060 Q(PSF) = 42.917 PO = 2113.7 RUN NO = 18.000

SECTION (1)LND GR DR PRMTRS DEPENDENT VARIABLE CP

DUMMY 1.0000

TAP	
102.000	.9906
171.000	-.3495
176.000	-.1469
181.000	-.4322
183.000	-.0864
186.000	-.1802
192.000	-.3545

0A163B NOSE/MAIN GEAR DOOR PERIMETERS (RFPP02)

BETA (7) = .980 ALPHA (4) = 4.120 Q(PSF) = 42.917 PO = 2113.7 RUN NO = 18.000

SECTION (1)LND GR DR PRMTRS DEPENDENT VARIABLE CP

DUMMY 1.0000

TAP	
102.000	.9889
171.000	-.2775
176.000	-.0993
181.000	-.3751
183.000	-.0329
186.000	-.1416
192.000	-.3214

BETA (7) = .980 ALPHA (5) = 6.200 Q(PSF) = 42.917 PO = 2113.7 RUN NO = 18.000

SECTION (1)LND GR DR PRMTRS DEPENDENT VARIABLE CP

DUMMY 1.0000

TAP	
102.000	.9872
171.000	-.2021
176.000	-.0521
181.000	-.3300
183.000	.0173
186.000	-.0984
192.000	-.2855

BETA (7) = .980 ALPHA (6) = 8.270 Q(PSF) = 42.917 PO = 2113.7 RUN NO = 18.000

SECTION (1)LND GR DR PRMTRS DEPENDENT VARIABLE CP

DUMMY 1.0000

TAP	
102.000	.9875
171.000	-.1352
176.000	-.0027
181.000	-.2777
183.000	.0644
186.000	-.0589
192.000	-.2450

DATE 27 APR 77 OA163B PRESSURE DATA LISTING (RFPP02)

OA163B NOSE/MAIN GEAR DOOR PERIMETERS

BETA (8) = 1.970 ALPHA (1) = -2.060 Q(PSF) = 42.822 PO = 2113.7 RUN NO = 19.000

SECTION (1)LND GR DR PRMTRS DEPENDENT VARIABLE CP

DUMMY 1.0000

TAP	
102.000	.9859
171.000	-.4544
176.000	-.2195
181.000	-.5643
183.000	-.1852
186.000	-.2507
192.000	-.4027

BETA (8) = 1.970 ALPHA (2) = .010 Q(PSF) = 42.822 PO = 2113.7 RUN NO = 19.000

SECTION (1)LND GR DR PRMTRS DEPENDENT VARIABLE CP

DUMMY 1.0000

TAP	
102.000	.9852
171.000	-.4027
176.000	-.1720
181.000	-.4974
183.000	-.1337
186.000	-.2143
192.000	-.3735

BETA (8) = 1.970 ALPHA (3) = 2.070 Q(PSF) = 42.822 PO = 2113.7 RUN NO = 19.000

SECTION (1)LND GR DR PRMTRS DEPENDENT VARIABLE CP

DUMMY 1.0000

TAP	
102.000	.9882
171.000	-.3419
176.000	-.1309
181.000	-.4368
183.000	-.0825
186.000	-.1773
192.000	-.3501

OA163B NOSE/MAIN GEAR DOOR PERIMETERS (RFPP02)

BETA (8) = 1.970 ALPHA (4) = 4.130 Q(PSF) = 42.822 PO = 2113.7 RUN NO = 19.000

SECTION (1)LND GR DR PRMTRS DEPENDENT VARIABLE CP

DUMMY 1.0000

TAP	
102.000	.9872
171.000	-.2777
176.000	-.0833
181.000	-.3824
183.000	-.0319
186.000	-.1407
192.000	-.3156

BETA (8) = 1.970 ALPHA (5) = 6.200 Q(PSF) = 42.822 PO = 2113.7 RUN NO = 19.000

SECTION (1)LND GR DR PRMTRS DEPENDENT VARIABLE CP

DUMMY 1.0000

TAP	
102.000	.9820
171.000	-.2081
176.000	-.0359
181.000	-.3279
183.000	.0173
186.000	-.1004
192.000	-.2770

BETA (8) = 1.970 ALPHA (6) = 8.270 Q(PSF) = 42.822 PO = 2113.7 RUN NO = 19.000

SECTION (1)LND GR DR PRMTRS DEPENDENT VARIABLE CP

DUMMY 1.0000

TAP	
102.000	.9836
171.000	-.1288
176.000	.0163
181.000	-.2689
183.000	.0647
186.000	-.0582
192.000	-.2473

OA163B NOSE/MAIN GEAR DOOR PERIMETERS (RFPP02)

BETA (9) = 2.990 ALPHA (1) = -2.060 Q(PSF) = 42.823 PO = 2120.5 RUN NO = 20.000

SECTION (1)LND GR DR PRMTRS DEPENDENT VARIABLE CP

DUMMY 1.0000

TAP	
102.000	.9855
171.000	-.4541
176.000	-.1977
181.000	-.5728
183.000	-.1817
186.000	-.2480
192.000	-.3956

BETA (9) = 2.990 ALPHA (2) = -.020 Q(PSF) = 42.823 PO = 2120.5 RUN NO = 20.000

SECTION (1)LND GR DR PRMTRS DEPENDENT VARIABLE CP

DUMMY 1.0000

TAP	
102.000	.9849
171.000	-.4086
176.000	-.1532
181.000	-.5066
183.000	-.1320
186.000	-.2137
192.000	-.3768

BETA (9) = 2.990 ALPHA (3) = 2.050 Q(PSF) = 42.823 PO = 2120.5 RUN NO = 20.000

SECTION (1)LND GR DR PRMTRS DEPENDENT VARIABLE CP

DUMMY 1.0000

TAP	
102.000	.9824
171.000	-.3506
176.000	-.1056
181.000	-.4444
183.000	-.0804
186.000	-.1782
192.000	-.3570

DATE 27 APR 77 OA163B PRESSURE DATA LISTING (RFPP02)

OA163B NOSE/MAIN GEAR DOOR PERIMETERS

BETA (9) = 2.990 ALPHA (4) = 4.130 Q(PSF) = 42.823 PO = 2120.5 RUN NO = 20.000

SECTION (1)LND GR DR PRMTRS DEPENDENT VARIABLE CP

DUMMY 1.0000

TAP	
102.000	.9823
171.000	-.2935
176.000	-.0673
181.000	-.3873
183.000	-.0310
186.000	-.1410
192.000	-.3296

BETA (9) = 2.990 ALPHA (5) = 6.190 Q(PSF) = 42.823 PO = 2120.5 RUN NO = 20.000

SECTION (1)LND GR DR PRMTRS DEPENDENT VARIABLE CP

DUMMY 1.0000

TAP	
102.000	.9763
171.000	-.2061
176.000	-.0158
181.000	-.3300
183.000	.0173
186.000	-.1024
192.000	-.2927

BETA (9) = 2.990 ALPHA (6) = 8.260 Q(PSF) = 42.823 PO = 2120.5 RUN NO = 20.000

SECTION (1)LND GR DR PRMTRS DEPENDENT VARIABLE CP

DUMMY 1.0000

TAP	
102.000	.9727
171.000	-.1044
176.000	.0254
181.000	-.2696
183.000	.0657
186.000	-.0591
192.000	-.2530

DATE 27 APR 77 OA163B PRESSURE DATA LISTING (RFPP02)

OA163B NOSE/MAIN GEAR DOOR PERIMETERS

BETA (10) = 4.060 ALPHA (1) = -2.050 Q(PSF) = 42.778 PO = 2120.6 RUN NO = 21.000

SECTION (1)LND GR DR PRMTRS DEPENDENT VARIABLE CP

DUMMY 1.0000

TAP	
102.000	.9863
171.000	-.4466
176.000	-.1827
181.000	-.5942
183.000	-.1746
186.000	-.2413
192.000	-.3954

BETA (10) = 4.060 ALPHA (2) = .000 Q(PSF) = 42.778 PO = 2120.6 RUN NO = 21.000

SECTION (1)LND GR DR PRMTRS DEPENDENT VARIABLE CP

DUMMY 1.0000

TAP	
102.000	.9819
171.000	-.4038
176.000	-.1408
181.000	-.5308
183.000	-.1307
186.000	-.2083
192.000	-.3869

BETA (10) = 4.060 ALPHA (3) = 2.070 Q(PSF) = 42.778 PO = 2120.6 RUN NO = 21.000

SECTION (1)LND GR DR PRMTRS DEPENDENT VARIABLE CP

DUMMY 1.0000

TAP	
102.000	.9770
171.000	-.3498
176.000	-.0955
181.000	-.4658
183.000	-.0794
186.000	-.1752
192.000	-.3704

OA163B NOSE/MAIN GEAR DOOR PERIMETERS (RFPP02)

BETA (10) = 4.060 ALPHA (4) = 4.110 Q(PSF) = 42.778 PO = 2120.6 RUN NO = 21.000

SECTION (1)LND GR DR PRMTRS DEPENDENT VARIABLE CP

DUMMY 1.0000

TAP	
102.000	.9751
171.000	-.2628
176.000	-.0531
181.000	-.4040
183.000	-.0279
186.000	-.1388
192.000	-.3389

BETA (10) = 4.060 ALPHA (5) = 6.190 Q(PSF) = 42.778 PO = 2120.6 RUN NO = 21.000

SECTION (1)LND GR DR PRMTRS DEPENDENT VARIABLE CP

DUMMY 1.0000

TAP	
102.000	.9707
171.000	-.1661
176.000	-.0118
181.000	-.3487
183.000	.0204
186.000	-.1005
192.000	-.3016

BETA (10) = 4.060 ALPHA (6) = 8.260 Q(PSF) = 42.778 PO = 2120.6 RUN NO = 21.000

SECTION (1)LND GR DR PRMTRS DEPENDENT VARIABLE CP

DUMMY 1.0000

TAP	
102.000	.9697
171.000	-.0814
176.000	.0355
181.000	-.2821
183.000	.0708
186.000	-.0582
192.000	-.2655

OA163B NOSE/MAIN GEAR DOOR PERIMETERS (RFPP02)

BETA (11) = 5.030 ALPHA (1) = -2.070 Q(PSF) = 42.767 PO = 2120.6 RUN NO = 22.000

SECTION (1)LND GR DR PRMTRS DEPENDENT VARIABLE CP

DUMMY 1.0000

TAP	
102.000	.9794
171.000	-.4224
176.000	-.1728
181.000	-.6378
183.000	-.1778
186.000	-.2372
192.000	-.3984

BETA (11) = 5.030 ALPHA (2) = .000 Q(PSF) = 42.767 PO = 2120.6 RUN NO = 22.000

SECTION (1)LND GR DR PRMTRS DEPENDENT VARIABLE CP

DUMMY 1.0000

TAP	
102.000	.9741
171.000	-.3970
176.000	-.1288
181.000	-.5715
183.000	-.1298
186.000	-.2054
192.000	-.3944

BETA (11) = 5.030 ALPHA (3) = 2.070 Q(PSF) = 42.767 PO = 2120.6 RUN NO = 22.000

SECTION (1)LND GR DR PRMTRS DEPENDENT VARIABLE CP

DUMMY 1.0000

TAP	
102.000	.9740
171.000	-.3227
176.000	-.0916
181.000	-.4994
183.000	-.0774
186.000	-.1713
192.000	-.3815

OA163B NOSE/MAIN GEAR DOOR PERIMETERS (RFPP02)

BETA (11) = 5.030 ALPHA (4) = 4.120 Q(PSF) = 42.767 PO = 2120.6 RUN NO = 22.000

SECTION (1)LND GR DR PRMTRS DEPENDENT VARIABLE CP

DUMMY 1.0000

TAP	
102.000	.9721
171.000	-.2149
176.000	-.0464
181.000	-.4352
183.000	-.0271
186.000	-.1347
192.000	-.3521

BETA (11) = 5.030 ALPHA (5) = 6.190 Q(PSF) = 42.767 PO = 2120.6 RUN NO = 22.000

SECTION (1)LND GR DR PRMTRS DEPENDENT VARIABLE CP

DUMMY 1.0000

TAP	
102.000	.9689
171.000	-.1348
176.000	-.0047
181.000	-.3636
183.000	.0254
186.000	-.0985
192.000	-.3207

BETA (11) = 5.030 ALPHA (6) = 8.260 Q(PSF) = 42.767 PO = 2120.6 RUN NO = 22.000

SECTION (1)LND GR DR PRMTRS DEPENDENT VARIABLE CP

DUMMY 1.0000

TAP	
102.000	.9603
171.000	-.0753
176.000	.0456
181.000	-.2990
183.000	.0869
186.000	-.0662
192.000	-.3014

OA163B NOSE/MAIN GEAR DOOR PERIMETERS (RFPP03) (27 APR 77)

REFERENCE DATA

SREF =	2690.0000 SQ.FT.	XMRP =	1076.7000 IN. XO		
LREF =	474.8100 INCHES	YMRP =	.0000 IN. YO		
BREF =	936.6800 INCHES	ZMRP =	375.0000 IN. ZO		
SCALE =	.0405				

PARAMETRIC DATA

SPDBRK =	25.000	BDFLAP =	.000
ELV-L =	.000	ELV-R =	.000
PHI-N =	30.800	THETAN =	5.000
PHI-ML =	40.000	THETML =	6.200
PHI-MR =	40.000	THETMR =	6.200

BETA (1) = -5.030 ALPHA (1) = -2.080 Q(PSF) = 42.820 PO = 2117.7 RUN NO = 23.000

SECTION (1)LND GR DR PRMTRS DEPENDENT VARIABLE CP

DUMMY 1.0000

TAP	
102.000	.9611
171.000	-.4656
176.000	-.2246
181.000	-.5372
183.000	-.2034
186.000	-.2579
192.000	-.3558

BETA (1) = -5.020 ALPHA (2) = -.010 Q(PSF) = 42.820 PO = 2117.7 RUN NO = 23.000

SECTION (1)LND GR DR PRMTRS DEPENDENT VARIABLE CP

DUMMY 1.0000

TAP	
102.000	.9709
171.000	-.4078
176.000	-.1851
181.000	-.4773
183.000	-.1569
186.000	-.2284
192.000	-.3543

BETA (1) = -5.030 ALPHA (3) = 2.060 Q(PSF) = 42.820 PO = 2117.7 RUN NO = 23.000

SECTION (1)LND GR DR PRMTRS DEPENDENT VARIABLE CP

DUMMY 1.0000

TAP	
102.000	.9689
171.000	-.3484
176.000	-.1408
181.000	-.4190
183.000	-.1085
186.000	-.1942
192.000	-.3424

OA163B NOSE/MAIN GEAR DOOR PERIMETERS (RFPP03)

BETA (1) = -5.030 ALPHA (4) = 4.110 Q(PSF) = 42.820 PO = 2117.7 RUN NO = 23.000

SECTION (1)LND GR DR PRMTRS DEPENDENT VARIABLE CP

DUMMY 1.0000

TAP	
102.000	.9734
171.000	-.2949
176.000	-.0904
181.000	-.3614
183.000	-.0622
186.000	-.1549
192.000	-.3266

BETA (1) = -5.030 ALPHA (5) = 6.190 Q(PSF) = 42.820 PO = 2117.7 RUN NO = 23.000

SECTION (1)LND GR DR PRMTRS DEPENDENT VARIABLE CP

DUMMY 1.0000

TAP	
102.000	.9763
171.000	-.2320
176.000	-.0349
181.000	-.3034
183.000	-.0188
186.000	-.1164
192.000	-.3032

BETA (1) = -5.030 ALPHA (6) = 8.260 Q(PSF) = 42.820 PO = 2117.7 RUN NO = 23.000

SECTION (1)LND GR DR PRMTRS DEPENDENT VARIABLE CP

DUMMY 1.0000

TAP	
102.000	.9803
171.000	-.1704
176.000	.0164
181.000	-.2380
183.000	.0345
186.000	-.0714
192.000	-.2803

0A163B NOSE/MAIN GEAR DOOR PERIMETERS (RFPP03)

BETA (2) = -4.030 ALPHA (1) = -2.080 Q(PSF) = 42.867 PO = 2117.8 RUN NO = 24.000

SECTION (1)LND GR DR PRMTRS DEPENDENT VARIABLE CP

DUMMY 1.0000

TAP	
102.000	.9659
171.000	-.4549
176.000	-.2208
181.000	-.5433
183.000	-.1966
186.000	-.2529
192.000	-.3630

BETA (2) = -4.030 ALPHA (2) = .000 Q(PSF) = 42.867 PO = 2117.8 RUN NO = 24.000

SECTION (1)LND GR DR PRMTRS DEPENDENT VARIABLE CP

DUMMY 1.0000

TAP	
102.000	.9697
171.000	-.3972
176.000	-.1813
181.000	-.4849
183.000	-.1510
186.000	-.2257
192.000	-.3535

BETA (2) = -4.030 ALPHA (3) = 2.050 Q(PSF) = 42.867 PO = 2117.8 RUN NO = 24.000

SECTION (1)LND GR DR PRMTRS DEPENDENT VARIABLE CP

DUMMY 1.0000

TAP	
102.000	.9729
171.000	-.3461
176.000	-.1407
181.000	-.4257
183.000	-.1054
186.000	-.1900
192.000	-.3421

OA163B NOSE/MAIN GEAR DOOR PERIMETERS (RFPP03)

BETA (2) = -4.030 ALPHA (4) = 4.120 Q(PSF) = 42.867 PO = 2117.8 RUN NO = 24.000

SECTION (1)LND GR DR PRMTRS DEPENDENT VARIABLE CP

DUMMY 1.0000

TAP	
102.000	.9756
171.000	-.2945
176.000	-.0872
181.000	-.3700
183.000	-.0540
186.000	-.1526
192.000	-.3250

BETA (2) = -4.040 ALPHA (5) = 6.190 Q(PSF) = 42.867 PO = 2117.8 RUN NO = 24.000

SECTION (1)LND GR DR PRMTRS DEPENDENT VARIABLE CP

DUMMY 1.0000

TAP	
102.000	.9821
171.000	-.2313
176.000	-.0329
181.000	-.3078
183.000	-.0077
186.000	-.1145
192.000	-.3035

BETA (2) = -4.040 ALPHA (6) = 8.260 Q(PSF) = 42.867 PO = 2117.8 RUN NO = 24.000

SECTION (1)LND GR DR PRMTRS DEPENDENT VARIABLE CP

DUMMY 1.0000

TAP	
102.000	.9893
171.000	-.1699
176.000	.0153
181.000	-.2514
183.000	.0395
186.000	-.0742
192.000	-.2759

DATE 27 APR 77 OA163B PRESSURE DATA LISTING (RFPP03)

OA163B NOSE/MA.N GEAR DOOR PERIMETERS

BETA (3) = -2.960 ALPHA (1) = -2.060 Q(PSF) = 42.893 PO = 2117.8 RUN NO = 25.000

SECTION (1)LND GR DR PRMTRS DEPENDENT VAR:ABLE CP

DUMMY 1.0000

TAP	
102.000	.9697
171.000	-.4525
176.000	-.2261
181.000	-.5572
183.000	-.1929
186.000	-.2523
192.000	-.3659

BETA (3) = -2.960 ALPHA (2) = .010 Q(PSF) = 42.893 PO = 2117.8 RUN NO = 25.000

SECTION (1)LND GR DR PRMTRS DEPENDENT VARIABLE CP

DUMMY 1.0000

TAP	
102.000	.9739
171.000	-.3964
176.000	-.1824
181.000	-.4933
183.000	-.1450
186.000	-.2218
192.000	-.3489

BETA (3) = -2.960 ALPHA (3) = 2.050 Q(PSF) = 42.893 PO = 2117.8 RUN NO = 25.000

SECTION (1)LND GR DR PRMTRS DEPENDENT VARIABLE CP

DUMMY 1.0000

TAP	
102.000	.9798
171.000	-.3486
176.000	-.1344
181.000	-.4361
183.000	-.1013
186.000	-.1847
192.000	-.3476

OA163B NOSE/MAIN GEAR DOOR PERIMETERS (RFPP03)

BETA (3) = -2.960 ALPHA (4) = 4.120 Q(PSF) = 42.893 PO = 2117.8 RUN NO = 25.000

SECTION (1)LND GR DR PRMTRS DEPENDENT VARIABLE CP

DUMMY 1.0000

TAP	
102.000	.9833
171.000	-.2887
176.000	-.0823
181.000	-.3742
183.000	-.0480
186.000	-.1507
192.000	-.3300

BETA (3) = -2.960 ALPHA (5) = 6.200 Q(PSF) = 42.893 PO = 2117.8 RUN NO = 25.000

SECTION (1)LND GR DR PRMTRS DEPENDENT VARIABLE CP

DUMMY 1.0000

TAP	
102.000	.9814
171.000	-.2252
176.000	-.0308
181.000	-.3115
183.000	-.0007
186.000	-.1110
192.000	-.3082

BETA (3) = -2.960 ALPHA (6) = 8.280 Q(PSF) = 42.893 PO = 2117.8 RUN NO = 25.000

SECTION (1)LND GR DR PRMTRS DEPENDENT VARIABLE CP

DUMMY 1.0000

TAP	
102.000	.9833
171.000	-.1618
176.000	.0153
181.000	-.2504
183.000	.0465
186.000	-.0692
192.000	-.2770

OA163B NOSE/MAIN GEAR DOOR PERIMETERS (RFPP03)

BETA (4) = -2.030 ALPHA (1) = -2.060 Q(PSF) = 42.872 PO = 2117.8 RUN NO = 26.000

SECTION (1)LND GR DR PRMTRS DEPENDENT VARIABLE CP

DUMMY 1.0000

TAP	
102.000	.9762
171.000	-.4587
176.000	-.2257
181.000	-.5501
183.000	-.1875
186.000	-.2488
192.000	-.3652

BETA (4) = -2.020 ALPHA (2) = .020 Q(PSF) = 42.872 PO = 2117.8 RUN NO = 26.000

SECTION (1)LND GR DR PRMTRS DEPENDENT VARIABLE CP

DUMMY 1.0000

TAP	
102.000	.9821
171.000	-.3989
176.000	-.1842
181.000	-.4936
183.000	-.1408
186.000	-.2174
192.000	-.3617

BETA (4) = -2.030 ALPHA (3) = 2.070 Q(PSF) = 42.872 PO = 2117.8 RUN NO = 26.000

SECTION (1)LND GR DR PRMTRS DEPENDENT VARIABLE CP

DUMMY 1.0000

TAP	
102.000	.9794
171.000	-.3431
176.000	-.1342
181.000	-.4375
183.000	-.0941
186.000	-.1844
192.000	-.3471

DATE 27 APR 77 OA163B PRESSURE DATA LISTING (RFPP03)

OA163B NOSE/MAIN GEAR DOOR PERIMETERS

BETA (4) = -2.020 ALPHA (4) = 4.120 Q(PSF) = 42.872 PO = 2117.8 RUN NO = 26.000

SECTION (1)LND GR DR PRMTRS DEPENDENT VARIABLE CP

DUMMY 1.0000

TAP	
102.000	.9827
171.000	-.2784
176.000	-.0822
181.000	-.3740
183.000	-.0440
186.000	-.1426
192.000	-.3346

BETA (4) = -2.020 ALPHA (5) = 6.200 Q(PSF) = 42.872 PO = 2117.8 RUN NO = 26.000

SECTION (1)LND GR DR PRMTRS DEPENDENT VARIABLE CP

DUMMY 1.0000

TAP	
102.000	.9839
171.000	-.2229
176.000	-.0360
181.000	-.3198
183.000	.0032
186.000	-.1067
192.000	-.3093

BETA (4) = -2.020 ALPHA (6) = 8.270 Q(PSF) = 42.872 PO = 2117.8 RUN NO = 26.000

SECTION (1)LND GR DR PRMTRS DEPENDENT VARIABLE CP

DUMMY 1.0000

TAP	
102.000	.9827
171.000	-.1589
176.000	.0083
181.000	-.2596
183.000	.0536
186.000	-.0662
192.000	-.2748

OA163B NOSE/MAIN GEAR DOOR PERIMETERS (RFPP03)

BETA (5) = -1.030 ALPHA (1) = -2.060 Q(PSF) = 42.872 PO = 2117.8 RUN NO = 27.000

SECTION (1)LND GR DR PRMTRS DEPENDENT VARIABLE CP

DUMMY 1.0000

TAP	
102.000	.9804
171.000	-.4554
176.000	-.2276
181.000	-.5448
183.000	-.1844
186.000	-.2466
192.000	-.3710

BETA (5) = -1.030 ALPHA (2) = .000 Q(PSF) = 42.872 PO = 2117.8 RUN NO = 27.000

SECTION (1)LND GR DR PRMTRS DEPENDENT VARIABLE CP

DUMMY 1.0000

TAP	
102.000	.9761
171.000	-.3883
176.000	-.1719
181.000	-.4658
183.000	-.1306
186.000	-.2111
192.000	-.3588

BETA (5) = -1.030 ALPHA (3) = 2.060 Q(PSF) = 42.872 PO = 2117.8 RUN NO = 27.000

SECTION (1)LND GR DR PRMTRS DEPENDENT VARIABLE CP

DUMMY 1.0000

TAP	
102.000	.9822
171.000	-.3336
176.000	-.1334
181.000	-.4261
183.000	-.0902
186.000	-.1817
192.000	-.3512

OA163B NOSE/MAIN GEAR DOOR PERIMETERS (RFPP03)

BETA (5) = -1.030 ALPHA (4) = 4.120 Q(PSF) = 42.872 PO = 2117.8 RUN NO = 27.000

SECTION (1)LND GR DR PRMTRS DEPENDENT VARIABLE CP

DUMMY 1.0000

TAP	
102.000	.9857
171.000	-.2719
176.000	-.0864
181.000	-.3757
183.000	-.0370
186.000	-.1408
192.000	-.3316

BETA (5) = -1.030 ALPHA (5) = 6.190 Q(PSF) = 42.872 PO = 2117.8 RUN NO = 27.000

SECTION (1)LND GR DR PRMTRS DEPENDENT VARIABLE CP

DUMMY 1.0000

TAP	
102.000	.9843
171.000	-.2119
176.000	-.0431
181.000	-.3230
183.000	.0093
186.000	-.1017
192.000	-.3082

BETA (5) = -1.030 ALPHA (6) = 8.280 Q(PSF) = 42.872 PO = 2117.8 RUN NO = 27.000

SECTION (1)LND GR DR PRMTRS DEPENDENT VARIABLE CP

DUMMY 1.0000

TAP	
102.000	.9866
171.000	-.1485
176.000	.0052
181.000	-.2651
183.000	.0565
186.000	-.0640
192.000	-.2802

DATE 27 APR 77 OA163B PRESSURE DATA LISTING

OA163B NOSE/M..IN GEAR DOOR PERIMETERS (RFPP03)

BETA (6) = .030 ALPHA (1) = .000 Q(PSF) = 42.985 PO = 2117.8 RUN NO = 28.000

SECTION (1)LND GR DR PRMTRS DEPENDENT VARIABLE CP

DUMMY 1.0000

TAP	
102.000	.9832
171.000	-.3899
176.000	-.1699
181.000	-.4840
183.000	-.1378
186.000	-.2198
192.000	-.3781

BETA (6) = .030 ALPHA (2) = 2.070 Q(PSF) = 42.985 PO = 2117.8 RUN NO = 28.000

SECTION (1)LND GR DR PRMTRS DEPENDENT VARIABLE CP

DUMMY 1.0000

TAP	
102.000	.9837
171.000	-.3345
176.000	-.1350
181.000	-.4277
183.000	-.0869
186.000	-.1801
192.000	-.3584

BETA (6) = .030 ALPHA (3) = 4.130 Q(PSF) = 42.985 PO = 2117.8 RUN NO = 28.000

SECTION (1)LND GR DR PRMTRS DEPENDENT VARIABLE CP

DUMMY 1.0000

TAP	
102.000	.9833
171.000	-.2662
176.000	-.0922
181.000	-.3738
183.000	-.0329
186.000	-.1385
192.000	-.3308

OA163B NOSE/MAIN GEAR DOOR PERIMETERS (RFPP03)

BETA (6) = .030 ALPHA (4) = 6.210 Q(PSF) = 42.985 PO = 2117.8 RUN NO = 28.000

SECTION (1)LND GR DR PRMTRS DEPENDENT VARIABLE CP

DUMMY 1.0000

TAP	
102.000	.9842
171.000	-.1982
176.000	-.0370
181.000	-.3242
183.000	.0153
186.000	-.1015
192.000	-.3050

BETA (7) = .960 ALPHA (1) = .000 Q(PSF) = 42.767 PO = 2117.2 RUN NO = 29.000

SECTION (1)LND GR DR PRMTRS DEPENDENT VARIABLE CP

DUMMY 1.0000

TAP	
102.000	.9825
171.000	-.3976
176.000	-.1815
181.000	-.4880
183.000	-.1373
186.000	-.2147
192.000	-.3701

BETA (7) = .960 ALPHA (2) = 2.070 Q(PSF) = 42.767 PO = 2117.2 RUN NO = 29.000

SECTION (1)LND GR DR PRMTRS DEPENDENT VARIABLE CP

DUMMY 1.0000

TAP	
102.000	.9891
171.000	-.3420
176.000	-.1435
181.000	-.4321
183.000	-.0858
186.000	-.1789
192.000	-.3464

OA163B NOSE/MAIN GEAR DOOR PERIMETERS (RFPP03)

BETA (7) = .960 ALPHA (3) = 4.130 Q(PSF) = 42.767 PO = 2117.2 RUN NO = 29.000

SECTION (1)LND GR DR PRMTRS DEPENDENT VARIABLE CP

DUMMY 1.0000

TAP	
102.000	.9845
171.000	-.2685
176.000	-.0994
181.000	-.3763
183.000	-.0329
186.000	-.1376
192.000	-.3131

BETA (7) = .960 ALPHA (4) = 6.200 Q(PSF) = 42.767 PO = 2117.2 RUN NO = 29.000

SECTION (1)LND GR DR PRMTRS DEPENDENT VARIABLE CP

DUMMY 1.0000

TAP	
102.000	.9839
171.000	-.1930
176.000	-.0533
181.000	-.3287
183.000	.0174
186.000	-.0999
192.000	-.2846

BETA (8) = 1.950 ALPHA (1) = .000 Q(PSF) = 42.910 PO = 2117.1 RUN NO = 30.000

SECTION (1)LND GR DR PRMTRS DEPENDENT VARIABLE CP

DUMMY 1.0000

TAP	
102.000	.9260
171.000	-.4046
176.000	-.1761
181.000	-.4978
183.000	-.1350
186.000	-.2142
192.000	-.3776

OA163B NOSE/MAIN GEAR DOOR PERIMETERS (RFPP03)

BETA (8) = 1.940 ALPHA (2) = 2.060 Q(PSF) = 42.910 PO = 2117.1 RUN NO = 30.000

SECTION (1)LND GR DR PRMTRS DEPENDENT VARIABLE CP

DUMMY 1.0000

TAP	
102.000	.9899
171.000	-.3352
176.000	-.1357
181.000	-.4400
183.000	-.0833
186.000	-.1790
192.000	-.3495

BETA (8) = 1.940 ALPHA (3) = 4.140 Q(PSF) = 42.910 PO = 2117.1 RUN NO = 30.000

SECTION (1)LND GR DR PRMTRS DEPENDENT VARIABLE CP

DUMMY 1.0000

TAP	
102.000	.9872
171.000	-.2729
176.000	-.0847
181.000	-.3822
183.000	-.0301
186.000	-.1414
192.000	-.3208

BETA (8) = 1.940 ALPHA (4) = 6.200 Q(PSF) = 42.910 PO = 2117.1 RUN NO = 30.000

SECTION (1)LND GR DR PRMTRS DEPENDENT VARIABLE CP

DUMMY 1.0000

TAP	
102.000	.9795
171.000	-.1960
176.000	-.0398
181.000	-.3222
193.000	.0162
186.000	-.1019
192.000	-.2804

OA163B NOSE/MAIN GEAR DOOR PERIMETERS (RFPP03)

BETA (9) = 5.000 ALPHA (1) = .000 Q(PSF) = 42.885 PO = 2117.2 RUN NO = 31.000

SECTION (1)LND GR DR PRMTRS DEPENDENT VARIABLE CP

DUMMY 1.0000

TAP	
102.000	.9751
171.000	-.3855
176.000	-.1376
181.000	-.5745
183.000	-.1316
186.000	-.2096
192.000	-.3981

BETA (9) = 5.000 ALPHA (2) = 2.080 Q(PSF) = 42.885 PO = 2117.2 RUN NO = 31.000

SECTION (1)LND GR DR PRMTRS DEPENDENT VARIABLE CP

DUMMY 1.0000

TAP	
102.000	.9698
171.000	-.3121
176.000	-.0924
181.000	-.5035
183.000	-.0783
186.000	-.1710
192.000	-.3796

BETA (9) = 4.990 ALPHA (3) = 4.130 Q(PSF) = 42.885 PO = 2117.2 RUN NO = 31.000

SECTION (1)LND GR DR PRMTRS DEPENDENT VARIABLE CP

DUMMY 1.0000

TAP	
102.000	.9698
171.000	-.2217
176.000	-.0471
181.000	-.4345
183.000	-.0300
186.000	-.1339
192.000	-.3536

OA163B NOSE/MAIN GEAR DOOR PERIMETERS (RFPP03)

BETA (9) = 4.990 ALPHA (4) = 6.220 Q(PSF) = 42.885 PO = 2117.2 RUN NO = 31.000

SECTION (1)LND GR DR PRMTRS DEPENDENT VARIABLE CP

DUMMY 1.0000

TAP	
102.000	.9665
171.000	-.1309
176.000	-.0027
181.000	-.3620
183.000	.0244
186.000	-.0986
192.000	-.3199

OA163B NOSE/MAIN GEAR DOOR PERIMETERS (RFPP04) (27 APR 77)

REFERENCE DATA

SREF =	2690.0000 SQ.FT.	XMRP =	1076.7000 IN. XO		
LREF =	474.8100 INCHES	YMRP =	.0000 IN. YO		
BREF =	936.6800 INCHES	ZMRP =	375.0000 IN. ZO		
SCALE =	.0405				

PARAMETRIC DATA

SPDBRK =	25.000	BDFLAP =	.000
ELV-L =	.000	ELV-R =	.000
PHI-N =	25.000	THETAN =	5.000
PHI-ML =	26.000	THETML =	4.000
PHI-MR =	26.000	THETMR =	4.000

BETA (1) = -5.030 ALPHA (1) = .000 Q(PSF) = 42.797 PO = 2115.0 RUN NO = 32.000

SECTION (1)LND GR DR PRMTRS DEPENDENT VARIABLE CP

DUMMY 1.0000

TAP	
102.000	.9717
171.000	-.4695
176.000	-.1707
181.000	-.4564
183.000	-.1637
186.000	-.2049
192.000	-.3273

BETA (1) = -5.030 ALPHA (2) = 2.070 Q(PSF) = 42.797 PO = 2115.0 RUN NO = 32.000

SECTION (1)LND GR DR PRMTRS DEPENDENT VARIABLE CP

DUMMY 1.0000

TAP	
102.000	.9768
171.000	-.4122
176.000	-.1248
181.000	-.3971
183.000	-.1197
186.000	-.1752
192.000	-.3173

BETA (1) = -5.030 ALPHA (3) = 4.130 Q(PSF) = 42.797 PO = 2115.0 RUN NO = 32.000

SECTION (1)LND GR DR PRMTRS DEPENDENT VARIABLE CP

DUMMY 1.0000

TAP	
102.000	.9829
171.000	-.3673
176.000	-.0825
181.000	-.3391
183.000	-.0765
186.000	-.1411
192.000	-.3033

OA163B NOSE/MAIN GEAR DOOR PERIMETERS (RFPP04)

BETA (1) = -5.030 ALPHA (4) = 6.210 Q(PSF) = 42.797 PO = 2115.0 RUN NO = 32.000

SECTION (1)LND GR DR PRMTRS DEPENDENT VARIABLE CP

DUMMY 1.0000

TAP	
102.000	.9772
171.000	-.3085
176.000	-.0340
181.000	-.2772
183.000	-.0290
186.000	-.1046
192.000	-.2777

BETA (2) = -2.000 ALPHA (1) = .000 Q(PSF) = 42.802 PO = 2115.0 RUN NO = 33.000

SECTION (1)LND GR DR PRMTRS DEPENDENT VARIABLE CP

DUMMY 1.0000

TAP	
102.000	.9784
171.000	-.5034
176.000	-.1696
181.000	-.4723
183.000	-.1525
186.000	-.2068
192.000	-.3331

BETA (2) = -2.010 ALPHA (2) = 2.050 Q(PSF) = 42.802 PO = 2115.0 RUN NO = 33.000

SECTION (1)LND GR DR PRMTRS DEPENDENT VARIABLE CP

DUMMY 1.0000

TAP	
102.000	.9822
171.000	-.4438
176.000	-.1266
181.000	-.4196
183.000	-.1034
186.000	-.1719
192.000	-.3144

OA1638 NOSE/MAIN GEAR DOOR PERIMETERS (RFPP04)

BETA (2) = -2.010 ALPHA (3) = 4.120 Q(PSF) = 42.802 PO = 2115.0 RUN NO = 33.000

SECTION (1)LND GR DR PRMTRS DEPENDENT VARIABLE CP

DUMMY 1.0000

TAP	
102.000	.9856
171.000	-.3887
176.000	-.0775
181.000	-.3675
183.000	-.0502
186.000	-.1351
192.000	-.2937

BETA (2) = -2.010 ALPHA (4) = 6.220 Q(PSF) = 42.802 PO = 2115.0 RUN NO = 33.000

SECTION (1)LND GR DR PRMTRS DEPENDENT VARIABLE CP

DUMMY 1.0000

TAP	
102.000	.9831
171.000	-.3422
176.000	-.0320
181.000	-.3280
183.000	-.0027
186.000	-.0997
192.000	-.2708

BETA (3) = -1.010 ALPHA (1) = .020 Q(PSF) = 42.885 PO = 2115.0 RUN NO = 34.000

SECTION (1)LND GR DR PRMTRS DEPENDENT VARIABLE CP

DUMMY 1.0000

TAP	
102.000	.9809
171.000	-.5109
176.000	-.1674
181.000	-.4737
183.000	-.1463
186.000	-.2065
192.000	-.3424

OA163B NOSE/MAIN GEAR DOOR PERIMETERS (RFPP04)

BETA (3) = -1.010 ALPHA (2) = 2.060 Q(PSF) = 42.885 PO = 2115.0 RUN NO = 34.000

SECTION (1)LND GR DR PRMTRS DEPENDENT VARIABLE CP

DUMMY 1.0000

TAP	
102.000	.9830
171.000	-.4406
176.000	-.1228
181.000	-.4255
183.000	-.0965
186.000	-.1712
192.000	-.3222

BETA (3) = -1.010 ALPHA (3) = 4.130 Q(PSF) = 42.885 PO = 2115.0 RUN NO = 34.000

SECTION (1)LND GR DR PRMTRS DEPENDENT VARIABLE CP

DUMMY 1.0000

TAP	
102.000	.9815
171.000	-.3976
176.000	-.0763
181.000	-.3815
183.000	-.0450
186.000	-.1347
192.000	-.2965

BETA (3) = -1.010 ALPHA (4) = 6.200 Q(PSF) = 42.885 PO = 2115.0 RUN NO = 34.000

SECTION (1)LND GR DR PRMTRS DEPENDENT VARIABLE CP

DUMMY 1.0000

TAP	
102.000	.9837
171.000	-.3524
176.000	-.0328
181.000	-.3383
183.000	.0022
186.000	-.0972
192.000	-.2669

OA163B NOSE/MAIN GEAR DOOR PERIMETERS (RFPP04)

BETA (4) = .010 ALPHA (1) = .000 Q(PSF) = 42.850 PO = 2115.0 RUN NO = 35.000

SECTION (1)LND GR DR PRMTRS DEPENDENT VARIABLE CP

DUMMY 1.0000

TAP	
102.000	.9787
171.000	-.5110
176.000	-.1624
181.000	-.4819
183.000	-.1433
186.000	-.2056
192.000	-.3448

BETA (4) = .010 ALPHA (2) = 2.070 Q(PSF) = 42.850 PO = 2115.0 RUN NO = 35.000

SECTION (1)LND GR DR PRMTRS DEPENDENT VARIABLE CP

DUMMY 1.0000

TAP	
102.000	.9905
171.000	-.4523
176.000	-.1196
181.000	-.4301
183.000	-.0924
186.000	-.1711
192.000	-.3340

BETA (4) = .010 ALPHA (3) = 4.130 Q(PSF) = 42.850 PO = 2115.0 RUN NO = 35.000

SECTION (1)LND GR DR PRMTRS DEPENDENT VARIABLE CP

DUMMY 1.0000

TAP	
102.000	.9825
171.000	-.4030
176.000	-.0733
181.000	-.3839
183.000	-.0410
186.000	-.1338
192.000	-.3016

OA163B NOSE/MAIN GEAR DOOR PERIMETERS (RFPP04)

BETA (4) = .010 ALPHA (4) = 6.200 Q(PSF) = 42.850 PO = 2115.0 RUN NO = 35.000

SECTION (1)LND GR DR PRMTRS DEPENDENT VARIABLE CP

DUMMY 1.0000

TAP	
102.000	.9736
171.000	-.3555
176.000	-.0309
181.000	-.3353
183.000	.0093
186.000	-.0954
192.000	-.2677

BETA (5) = 1.000 ALPHA (1) = .000 Q(PSF) = 42.797 PO = 2115.0 RUN NO = 36.000

SECTION (1)LND GR DR PRMTRS DEPENDENT VARIABLE CP

DUMMY 1.0000

TAP	
102.000	.9792
171.000	-.5109
176.000	-.1567
181.000	-.4958
183.000	-.1436
186.000	-.2040
192.000	-.3514

BETA (5) = 1.000 ALPHA (2) = 2.050 Q(PSF) = 42.797 PO = 2115.0 RUN NO = 36.000

SECTION (1)LND GR DR PRMTRS DEPENDENT VARIABLE CP

DUMMY 1.0000

TAP	
102.000	.9789
171.000	-.4545
176.000	-.1136
181.000	-.4403
183.000	-.0904
186.000	-.1681
192.000	-.3329

OA163B NOSE/MAIN GEAR DOOR PERIMETERS (RFPP04)

BETA (5) = 1.010 ALPHA (3) = 4.140 Q(PSF) = 42.797 PO = 2115.0 RUN NO = 36.000

SECTION (1)LND GR DR PRMTRS DEPENDENT VARIABLE CP

DUMMY 1.0000

TAP	
102.000	.9808
171.000	-.4135
176.000	-.0693
181.000	-.3933
183.000	-.0401
186.000	-.1349
192.000	-.3102

BETA (5) = 1.000 ALPHA (4) = 6.190 Q(PSF) = 42.797 PO = 2115.0 RUN NO = 36.000

SECTION (1)LND GR DR PRMTRS DEPENDENT VARIABLE CP

DUMMY 1.0000

TAP	
102.000	.9770
171.000	-.3603
176.000	-.0219
181.000	-.3381
183.000	.0123
186.000	-.0946
192.000	-.2780

BETA (6) = 1.990 ALPHA (1) = .020 Q(PSF) = 42.885 PO = 2115.0 RUN NO = 37.000

SECTION (1)LND GR DR PRMTRS DEPENDENT VARIABLE CP

DUMMY 1.0000

TAP	
102.000	.9822
171.000	-.5025
176.000	-.1526
181.000	-.5226
183.000	-.1405
186.000	-.2008
192.000	-.3548

OA163B NOSE/MAIN GEAR DOOR PERIMETERS (RFPP04)

BETA (6) = 1.980 ALPHA (2) = 2.050 Q(PSF) = 42.885 PO = 2115.0 RUN NO = 37.000

SECTION (1)LND GR DR PRMTRS DEPENDENT VARIABLE CP

DUMMY 1.0000

TAP	
102.000	.9790
171.000	-.4564
176.000	-.1053
181.000	-.4655
183.000	-.0912
186.000	-.1687
192.000	-.3405

BETA (6) = 1.990 ALPHA (3) = 4.130 Q(PSF) = 42.885 PO = 2115.0 RUN NO = 37.000

SECTION (1)LND GR DR PRMTRS DEPENDENT VARIABLE CP

DUMMY 1.0000

TAP	
102.000	.9750
171.000	-.4215
176.000	-.0640
181.000	-.4105
183.000	-.0419
186.000	-.1333
192.000	-.3148

BETA (6) = 1.990 ALPHA (4) = 6.180 Q(PSF) = 42.885 PO = 2115.0 RUN NO = 37.000

SECTION (1)LND GR DR PRMTRS DEPENDENT VARIABLE CP

DUMMY 1.0000

TAP	
102.000	.9737
171.000	-.3681
176.000	-.0168
181.000	-.3469
183.000	.0093
186.000	-.0915
192.000	-.2849

DATE 27 APR 77 OA163B PRESSURE DATA LISTING (RFPP04)

OA163B NOSE/MAIN GEAR DOOR PERIMETERS

BETA (7) = 5.010 ALPHA (1) = .000 Q(PSF) = 42.840 PO = 2115.0 RUN NO = 38.000

SECTION (1)LND GR DR PRMTRS DEPENDENT VARIABLE CP

DUMMY 1.0000

TAP	
102.000	.9633
171.000	-.5221
176.000	-.1343
181.000	-.6024
183.000	-.1534
186.000	-.1946
192.000	-.3761

BETA (7) = 5.010 ALPHA (2) = 2.050 Q(PSF) = 42.840 PO = 2115.0 RUN NO = 38.000

SECTION (1)LND GR DR PRMTRS DEPENDENT VARIABLE CP

DUMMY 1.0000

TAP	
102.000	.9569
171.000	-.4759
176.000	-.0933
181.000	-.5403
183.000	-.0593
186.000	-.1619
192.000	-.3672

BETA (7) = 5.010 ALPHA (3) = 4.110 Q(PSF) = 42.840 PO = 2115.0 RUN NO = 38.000

SECTION (1)LND GR DR PRMTRS DEPENDENT VARIABLE CP

DUMMY 1.0000

TAP	
102.000	.9536
171.000	-.4312
176.000	-.0461
181.000	-.4726
183.000	-.0461
186.000	-.1257
192.000	-.3413

OA163B NOSE/MAIN GEAR DOOR PERIMETERS (RFPPU

BETA (7) = 5.010 ALPHA (4) = 6.200 Q(PSF) = 42.840 PO = 2115.0 RUN NO = 38.000

SECTION (1)LND GR DR PRMTRS DEPENDENT VARIABLE CP

DUMMY 1.0000

TAP	
102.000	.9484
171.000	-.3674
176.000	.0032
181.000	-.4038
183.000	.0113
186.000	-.0896
192.000	-.3251

OA163B NOSE/MAIN GEAR DOOR PERIMETERS (RFPP05) (27 APR 77)

REFERENCE DATA

SREF = 2690.0000 SQ.FT. XMRP = 1076.7000 IN. XO
LREF = 474.8100 INCHES YMRP = .0000 IN. YO
BREF = 936.6800 INCHES ZMRP = 375.0000 IN. ZO
SCALE = .0405

PARAMETRIC DATA

SPDBRK =	25.000	BDFLAP =	.000
ELV-L =	5.000	ELV-R =	5.000
PHI-N =	30.800	THETAN =	5.000
PHI-ML =	32.200	THETML =	5.000
PHI-MR =	32.200	THETMR =	5.000

BETA (1) = -5.050 ALPHA (1) = .050 Q(PSF) = 42.827 PO = 2115.0 RUN NO = 39.000

SECTION (1)LND GR DR PRMTRS DEPENDENT VARIABLE CP

DUMMY 1.0000

TAP	
102.000	.9693
171.000	-.4960
176.000	-.1483
181.000	-.4475
183.000	-.1554
186.000	-.2059
192.000	-.3446

BETA (1) = -5.050 ALPHA (2) = 2.120 Q(PSF) = 42.827 PO = 2115.0 RUN NO = 39.000

SECTION (1)LND GR DR PRMTRS DEPENDENT VARIABLE CP

DUMMY 1.0000

TAP	
102.000	.9782
171.000	-.4451
176.000	-.1105
181.000	-.3997
183.000	-.1125
186.000	-.1791
192.000	-.3375

BETA (1) = -5.050 ALPHA (3) = 4.190 Q(PSF) = 42.827 PO = 2115.0 RUN NO = 39.000

SECTION (1)LND GR DR PRMTRS DEPENDENT VARIABLE CP

DUMMY 1.0000

TAP	
102.000	.9746
171.000	-.3973
176.000	-.0732
181.000	-.3419
183.000	-.0671
186.000	-.1436
192.000	-.3214

OA1638 NOSE/MAIN GEAR DOOR PERIMETERS (RFPP05)

BETA (1) = -5.050 ALPHA (4) = 6.270 Q(PSF) = 42.827 PO = 2115.0 RUN NO = 39.000

SECTION (1)LND GR DR PRMTRS DEPENDENT VARIABLE CP

DUMMY 1.0000

TAP	
102.000	.9753
171.000	-.3447
176.000	-.0298
181.000	-.2914
183.000	-.0198
186.000	-.1043
192.000	-.2972

BETA (2) = -4.050 ALPHA (1) = .050 Q(PSF) = 42.862 PO = 2115.0 RUN NO = 40.000

SECTION (1)LND GR DR PRMTRS DEPENDENT VARIABLE CP

DUMMY 1.0000

TAP	
102.000	.9693
171.000	-.4960
176.000	-.1514
181.000	-.4598
183.000	-.1504
186.000	-.2046
192.000	-.3497

BETA (2) = -4.050 ALPHA (2) = 2.110 Q(PSF) = 42.862 PO = 2115.0 RUN NO = 40.000

SECTION (1)LND GR DR PRMTRS DEPENDENT VARIABLE CP

DUMMY 1.0000

TAP	
102.000	.9789
171.000	-.4538
176.000	-.1132
181.000	-.4046
183.000	-.1052
186.000	-.1745
192.000	-.3389

OA163B NOSE/MAIN GEAR DOOR PERIMETERS (RFPP05)

BETA (2) = -4.050 ALPHA (3) = 4.190 Q(PSF) = 42.862 PO = 2115.0 RUN NO = 40.000

SECTION (1)LND GR DR PRMTRS DEPENDENT VARIABLE CP

DUMMY 1.0000

TAP	
102.000	.9815
171.000	-.4901
176.000	-.0725
181.000	-.3506
183.000	-.0583
186.000	-.1392
192.000	-.3157

BETA (2) = -4.050 ALPHA (4) = 6.240 Q(PSF) = 42.862 PO = 2115.0 RUN NO = 40.000

SECTION (1)LND GR DR PRMTRS DEPENDENT VARIABLE CP

DUMMY 1.0000

TAP	
102.000	.9811
171.000	-.3501
176.000	-.0390
181.000	-.2988
183.000	-.0148
186.000	-.1044
192.000	-.2915

BETA (3) = -2.970 ALPHA (1) = .070 Q(PSF) = 42.822 PO = 2115.1 RUN NO = 41.000

SECTION (1)LND GR DR PRMTRS DEPENDENT VARIABLE CP

DUMMY 1.0000

TAP	
102.000	.9800
171.000	-.5171
176.000	-.1554
181.000	-.4709
183.000	-.1474
186.000	-.2036
192.000	-.3497

OA163B NOSE/MAIN GEAR DOOR PERIMETERS (RFPP05)

BETA (3) = -2.970 ALPHA (2) = 2.110 Q(PSF) = 42.822 PO = 2115.1 RUN NO = 41.000

SECTION (1)LND GR DR PRMTRS DEPENDENT VARIABLE CP

DUMMY 1.0000

TAP	
102.000	.9848
171.000	-.4671
176.000	-.1128
181.000	-.4166
183.000	-.0966
186.000	-.1713
192.000	-.3393

BETA (3) = -2.960 ALPHA (3) = 4.190 Q(PSF) = 42.822 PO = 2115.1 RUN NO = 41.000

SECTION (1)LND GR DR PRMTRS DEPENDENT VARIABLE CP

DUMMY 1.0000

TAP	
102.000	.9840
171.000	-.4128
176.000	-.0742
181.000	-.3614
183.000	-.0531
186.000	-.1337
192.000	-.3170

BETA (3) = -2.970 ALPHA (4) = 6.260 Q(PSF) = 42.822 PO = 2115.1 RUN NO = 41.000

SECTION (1)LND GR DR PRMTRS DEPENDENT VARIABLE CP

DUMMY 1.0000

TAP	
102.000	.9848
171.000	-.3652
176.000	-.0370
181.000	-.3177
183.000	-.0098
186.000	-.1007
192.000	-.2887

OA163B NOSE/MAIN GEAR DOOR PERIMETERS (RFPP05)

BETA (4) = -2.030 ALPHA (1) = .030 Q(PSF) = 42.880 PO = 2115.0 RUN NO = 42.000

SECTION (1)LND GR DR PRMTRS DEPENDENT VARIABLE CP

DUMMY 1.0000

TAP	
102.000	.9806
171.000	-.5355
176.000	-.1555
181.000	-.4722
183.000	-.1394
186.000	-.2038
192.000	-.3475

BETA (4) = -2.030 ALPHA (2) = 2.120 Q(PSF) = 42.880 PO = 2115.0 RUN NO = 42.000

SECTION (1)LND GR DR PRMTRS DEPENDENT VARIABLE CP

DUMMY 1.0000

TAP	
102.000	.9825
171.000	-.4805
176.000	-.1103
181.000	-.4222
183.000	-.0912
186.000	-.1697
192.000	-.3297

BETA (4) = -2.030 ALPHA (3) = 4.170 Q(PSF) = 42.880 PO = 2115.0 RUN NO = 42.000

SECTION (1)LND GR DR PRMTRS DEPENDENT VARIABLE CP

DUMMY 1.0000

TAP	
102.000	.9831
171.000	-.4296
176.000	-.0683
181.000	-.3791
183.000	-.0461
186.000	-.1349
192.000	-.3174

OA163B NOSE/MAIN GEAR DOOR PERIMETERS (RFPP05)

BETA (4) = -2.030 ALPHA (4) = 6.260 Q(PSF) = 42.880 PO = 2115.0 RUN NO = 42.000

SECTION (1)LND GR DR PRMTRS DEPENDENT VARIABLE CP

DUMMY 1.0000

TAP	
102.000	.9797
171.000	-.3707
176.000	-.0329
181.000	-.3416
183.000	-.0017
186.000	-.0982
192.000	-.2767

BETA (5) = -1.040 ALPHA (1) = .050 Q(PSF) = 42.920 PO = 2115.1 RUN NO = 43.000

SECTION (1)LND GR DR PRMTRS DEPENDENT VARIABLE CP

DUMMY 1.0000

TAP	
102.000	.9839
171.000	-.5434
176.000	-.1525
181.000	-.4741
183.000	-.1334
186.000	-.2047
192.000	-.3510

BETA (5) = -1.040 ALPHA (2) = 2.120 Q(PSF) = 42.920 PO = 2115.1 RUN NO = 43.000

SECTION (1)LND GR DR PRMTRS DEPENDENT VARIABLE CP

DUMMY 1.0000

TAP	
102.000	.9823
171.000	-.4918
176.000	-.1079
181.000	-.4356
183.000	-.0859
186.000	-.1691
192.000	-.3332

DATE 27 APR 77 OA163B PRESSURE DATA LISTING

OA163B NOSE/MAIN GEAR DOOR PERIMETERS (RFPP05)

BETA (5) = -1.040 ALPHA (3) = 4.170 Q(PSF) = 42.920 PO = 2115.1 RUN NO = 43.000

SECTION (1)LND GR DR PRMTRS DEPENDENT VARIABLE CP

DUMMY 1.0000

TAP	
102.000	.9849
171.000	-.4358
176.000	-.0642
181.000	-.3985
183.000	-.0370
186.000	-.1336
192.000	-.3120

BETA (5) = -1.040 ALPHA (4) = 6.250 Q(PSF) = 42.920 PO = 2115.1 RUN NO = 43.000

SECTION (1)LND GR DR PRMTRS DEPENDENT VARIABLE CP

DUMMY 1.0000

TAP	
102.000	.9808
171.000	-.3736
176.000	-.0259
181.000	-.3504
183.000	.0093
186.000	-.0965
192.000	-.2810

BETA (6) = .000 ALPHA (1) = .040 Q(PSF) = 42.807 PO = 2115.1 RUN NO = 44.000

SECTION (1)LND GR DR PRMTRS DEPENDENT VARIABLE CP

DUMMY 1.0000

TAP	
102.000	.9813
171.000	-.5419
176.000	-.4496
181.000	-.4795
183.000	-.1305
186.000	-.2089
192.000	-.3533

OA163B NOSE/MAIN GEAR COOR PERIMETERS (RFPP05)

BETA (6) = .000 ALPHA (2) = 2.120 Q(PSF) = 42.807 PO = 2115.1 RUN NO = 44.000

SECTION (1)LND GR DR PRMTRS DEPENDENT VARIABLE CP

DUMMY 1.0000

TAP	
102.000	.9854
171.000	-.4901
176.000	-.1036
181.000	-.4396
183.000	-.0784
186.000	-.1702
192.000	-.3379

BETA (6) = .000 ALPHA (3) = 4.170 Q(PSF) = 42.807 PO = 2115.1 RUN NO = 44.000

SECTION (1)LND GR DR PRMTRS DEPENDENT VARIABLE CP

DUMMY 1.0000

TAP	
102.000	.9824
171.000	-.4373
176.000	-.0632
181.000	-.3990
183.000	-.0279
186.000	-.1368
192.000	-.3160

BETA (6) = .000 ALPHA (4) = 6.260 Q(PSF) = 42.807 PO = 2115.1 RUN NO = 44.000

SECTION (1)LND GR DR PRMTRS DEPENDENT VARIABLE CP

DUMMY 1.0000

TAP	
102.000	.9774
171.000	-.3742
176.000	-.0219
181.000	-.3530
183.000	.0164
186.000	-.0956
192.000	-.2801

OA163B NOSE/MAIN GEAR DOOR PERIMETERS (RFPP05)

BETA (7) = .980 ALPHA (1) = .070 Q(PSF) = 42.847 PO = 2115.1 RUN NO = 45.000

SECTION (1)LND GR DR PRMTRS DEPENDENT VARIABLE CP

DUMMY 1.0000

TAP	
102.000	.9808
171.000	-.5403
176.000	-.1426
181.000	-.4889
183.000	-.1265
186.000	-.2091
192.000	-.3720

BETA (7) = .980 ALPHA (2) = 2.120 Q(PSF) = 42.847 PO = 2115.1 RUN NO = 45.000

SECTION (1)LND GR DR PRMTRS DEPENDENT VARIABLE CP

DUMMY 1.0000

TAP	
102.000	.9805
171.000	-.4888
176.000	-.0953
181.000	-.4445
183.000	-.0752
186.000	-.1768
192.000	-.3491

BETA (7) = .980 ALPHA (3) = 4.170 Q(PSF) = 42.847 PO = 2115.1 RUN NO = 45.000

SECTION (1)LND GR DR PRMTRS DEPENDENT VARIABLE CP

DUMMY 1.0000

TAP	
102.000	.9782
171.000	-.4406
176.000	-.0552
181.000	-.3952
183.000	-.0259
186.000	-.1389
192.000	-.3222

OA163B NOSE/MAIN GEAR DOOR PERIMETERS (RFPP05)

BETA (7) = .980 ALPHA (4) = 6.240 Q(PSF) = 42.847 PO = 2115.1 RUN NO = 45.000

SECTION (1)LND GR DR PRMTRS DEPENDENT VARIABLE CF

DUMMY 1.0000

TAP	
102.000	.9706
171.000	-.3814
176.000	-.0158
181.000	-.3402
183.000	.0204
186.000	-.0954
192.000	-.2832

BETA (8) = 1.970 ALPHA (1) = .060 Q(PSF) = 42.845 PO = 2115.1 RUN NO = 46.000

SECTION (1)LND GR DR PRMTRS DEPENDENT VARIABLE CP

DUMMY 1.0000

TAP	
102.000	.9826
171.000	-.5393
176.000	-.1364
181.000	-.5042
183.000	-.1243
186.000	-.2127
192.000	-.3882

BETA (8) = 1.970 ALPHA (2) = 2.100 Q(PSF) = 42.845 PO = 2115.1 RUN NO = 46.000

SECTION (1)LND GR DR PRMTRS DEPENDENT VARIABLE CP

DUMMY 1.0000

TAP	
102.000	.9759
171.000	-.4919
176.000	-.0933
181.000	-.4486
183.000	-.0752
186.000	-.1768
192.000	-.3684

OA163B NOSE/MAIN GEAR DOOR PERIMETERS (RFPP05)

BETA (8) = 1.970 ALPHA (3) = 4.180 Q(PSF) = 42.845 PO = 2115.1 RUN NO = 46.000

SECTION (1)LND GR DR PRMTRS DEPENDENT VARIABLE CF

DUMMY 1.0000

TAP	
102.000	.9750
171.000	-.4438
176.000	-.0512
181.000	-.3984
183.000	-.0249
186.000	-.1380
192.000	-.3344

BETA (8) = 1.970 ALPHA (4) = 6.250 Q(PSF) = 42.845 PO = 2115.1 RUN NO = 46.000

SECTION (1)LND GR DR PRMTRS DEPENDENT VARIABLE CF

DUMMY 1.0000

TAP	
102.000	.9695
171.000	-.3910
176.000	-.0118
181.000	-.3416
183.000	.0224
186.000	-.0965
192.000	-.2884

BETA (9) = 2.980 ALPHA (1) = .070 Q(PSF) = 42.930 PO = 2115.1 RUN NO = 47.000

SECTION (1)LND GR DR PRMTRS DEPENDENT VARIABLE CF

DUMMY 1.0000

TAP	
102.000	.9751
171.000	-.5391
176.000	-.1333
181.000	-.5250
183.000	-.1222
186.000	-.2096
192.000	-.3904

OA163B NOSE/MAIN GEAR DOOR PERIMETERS (RFPP05)

BETA (9) = 2.990 ALPHA (2) = 2.100 Q(PSF) = 42.930 PO = 2115.1 RUN NO = 47.000

SECTION (1)LND GR DR PRMTRS DEPENDENT VARIABLE CF

DUMMY 1.0000

TAP	
102.000	.9743
171.000	-.4971
176.000	-.0921
181.000	-.4700
183.000	-.0761
186.000	-.1745
192.000	-.3750

BETA (9) = 2.990 ALPHA (3) = 4.190 Q(PSF) = 42.930 PO = 2115.1 RUN NO = 47.000

SECTION (1)LND GR DR PRMTRS DEPENDENT VARIABLE CF

DUMMY 1.0000

TAP	
102.000	.9711
171.000	-.4511
176.000	-.0500
181.000	-.4119
183.000	-.0238
186.000	-.1374
192.000	-.3379

BETA (9) = 2.990 ALPHA (4) = 6.260 Q(PSF) = 42.930 PO = 2115.1 RUN NO = 47.000

SECTION (1)LND GR DR PRMTRS DEPENDENT VARIABLE CF

DUMMY 1.0000

TAP	
102.000	.9688
171.000	-.3943
176.000	-.0047
181.000	-.3490
183.000	.0284
186.000	-.0973
192.000	-.2986

DATE 27 APR 77 OA163B PRESSURE DATA LISTING (RFPP05)

OA163B NOSE/MAIN GEAR DOOR PERIMETERS

BETA (10) = 4.050 ALPHA (1) = .040 Q(PSF) = 42.912 PO = 2115.1 RUN NO = 48.000

SECTION (1)LND GR DR PRMTRS DEPENDENT VARIABLE CP

DUMMY 1.0000

TAP	
102.000	.9688
171.000	-.5526
176.000	-.1309
181.000	-.5586
183.000	-.1249
186.000	-.2080
192.000	-.3929

BETA (10) = 4.040 ALPHA (2) = 2.100 Q(PSF) = 42.912 PO = 2115.1 RUN NO = 48.000

SECTION (1)LND GR DR PRMTRS DEPENDENT VARIABLE CP

DUMMY 1.0000

TAP	
102.000	.9687
171.000	-.5060
176.000	-.0893
181.000	-.4969
183.000	-.0772
186.000	-.1758
192.000	-.3804

BETA (10) = 4.050 ALPHA (3) = 4.190 Q(PSF) = 42.912 PO = 2115.1 RUN NO = 48.000

SECTION (1)LND GR DR PRMTRS DEPENDENT VARIABLE CP

DUMMY 1.0000

TAP	
102.000	.9635
171.000	-.4459
176.000	-.0480
181.000	-.4358
183.000	-.0229
186.000	-.1357
192.000	-.3482

OA163B NOSE/MAIN GEAR DOOR PERIMETERS (RFPP05)

BETA (10) = 4.050 ALPHA (4) = 6.250 Q(PSF) = 42.9 2 PO = 2115.1 RUN NO = 48.000

SECTION (1)LND GR DR PRMTRS DEPENDENT VARIABLE CP

DUMMY 1.0000

TAP	
102.000	.9602
171.000	-.3866
176.000	-.0047
181.000	-.3715
183.000	.0284
186.000	-.0954
192.000	-.3110

BETA (11) = 5.000 ALPHA (1) = .060 Q(PSF) = 42.8 7 PO = 2115.1 RUN NO = 49.000

SECTION (1)LND GR DR PRMTRS DEPENDENT VARIABLE CP

DUMMY 1.0000

TAP	
102.000	.9635
171.000	-.5567
176.000	-.1221
181.000	-.5856
183.000	-.1251
186.000	-.2034
192.000	-.3925

BETA (11) = 5.000 ALPHA (2) = 2.130 Q(PSF) = 42.8 7 PO = 2115.1 RUN NO = 49.000

SECTION (1)LND GR DR PRMTRS DEPENDENT VARIABLE CP

DUMMY 1.0000

TAP	
102.000	.9605
171.000	-.5009
176.000	-.0800
181.000	-.5259
183.000	-.0750
186.000	-.1714
192.000	-.3759

OA163B NOSE/MAIN GEAR DOOR PERIMETERS (RFPP05)

BETA (11) = 5.000 ALPHA (3) = 4.190 Q(PSF) = 42.8[illegible]7 PO = 2115.1 RUN NO = 49.000

SECTION (1)LND GR DR PRMTRS DEPENDENT VARIABLE CP

DUMMY 1.0000

TAP	
102.000	.9619
171.000	-.4504
176.000	-.0401
181.000	-.4696
183.000	-.0229
186.000	-.1331
192.000	-.3602

BETA (11) = 5.000 ALPHA (4) = 6.250 Q(PSF) = 42.8[illegible]7 PO = 2115.1 RUN NO = 49.000

SECTION (1)LND GR DR PRMTRS DEPENDENT VARIABLE CP

DUMMY 1.0000

TAP	
102.000	.9546
171.000	-.3867
176.000	.0063
181.000	-.4019
183.000	.0295
186.000	-.0967
192.000	-.3276

OA163B NOSE/MAIN GEAR DOOR PERIMETERS (RFPP06) (27 APR 77)

REFERENCE DATA

SREF = 2690.0000 SQ.FT. XMRP = 1076.7000 IN. XO
LREF = 474.8100 INCHES YMRP = .0000 IN. YO
BREF = 936.6800 INCHES ZMRP = 375.0000 IN. ZO
SCALE = .0405

PARAMETRIC DATA

SPDBRK =	25.000	BDFLAP =	16.300
ELV-L =	.000	ELV-R =	.000
PHI-N =	30.800	THETAN =	5.000
PHI-ML =	32.200	THETML =	5.000
PHI-MR =	32.200	THETMR =	5.000

BETA (1) = -5.030 ALPHA (1) = .010 Q(PSF) = 42.822 PO = 2119.9 RUN NO = 51.000

SECTION (1)LND GR DR PRMTRS DEPENDENT VARIABLE CP

DUMMY 1.0000

TAP	
102.000	.9751
171.000	-.4991
176.000	-.1507
181.000	-.4518
183.000	-.1558
186.000	-.2071
192.000	-.3457

BETA (1) = -5.030 ALPHA (2) = 2.100 Q(PSF) = 42.822 PO = 2119.9 RUN NO = 51.000

SECTION (1)LND GR DR PRMTRS DEPENDENT VARIABLE CP

DUMMY 1.0000

TAP	
102.000	.9750
171.000	-.4427
176.000	-.1104
181.000	-.3984
183.000	-.1145
186.000	-.1779
192.000	-.3348

BETA (1) = -5.030 ALPHA (3) = 4.140 Q(PSF) = 42.822 PO = 2119.9 RUN NO = 51.000

SECTION (1)LND GR DR PRMTRS DEPENDENT VARIABLE CP

DUMMY 1.0000

TAP	
102.000	.9805
171.000	-.3962
176.000	-.0693
181.000	-.3447
183.000	-.0703
186.000	-.1429
192.000	-.3246

OA163B NOSE/MAIN GEAR DOOR PERIMETERS (RFPP06)

BETA (1) = -5.040 ALPHA (4) = 6.230 Q(PSF) = 42.822 PO = 2119.9 RUN NO = 51.000

SECTION (1)LND GR DR PRMTRS DEPENDENT VARIABLE CP

DUMMY 1.0000

TAP	
102.000	.9802
171.000	-.3466
176.000	-.0269
181.000	-.2942
183.000	-.0239
186.000	-.1076
192.000	-.2980

BETA (2) = -4.030 ALPHA (1) = .010 Q(PSF) = 42.760 PO = 2119.8 RUN NO = 52.000

SECTION (1)LND GR DR PRMTRS DEPENDENT VARIABLE CP

DUMMY 1.0000

TAP	
102.000	.9795
171.000	-.4971
176.000	-.1541
181.000	-.4638
183.000	-.1541
186.000	-.2065
192.000	-.3488

BETA (2) = -4.030 ALPHA (2) = 2.090 Q(PSF) = 42.760 PO = 2119.8 RUN NO = 52.000

SECTION (1)LND GR DR PRMTRS DEPENDENT VARIABLE CP

DUMMY 1.0000

TAP	
102.000	.9849
171.000	-.4510
176.000	-.1178
181.000	-.4066
183.000	-.1087
186.000	-.1744
192.000	-.3406

OA163B NOSE/MAIN GEAR DOOR PERIMETERS (RFPP06)

BETA (2) = -4.030 ALPHA (3) = 4.140 Q(PSF) = 42.780 PO = 2119.8 RUN NO = 52.000

SECTION (1)LND GR DR PRMTRS DEPENDENT VARIABLE CP

DUMMY 1.0000

TAP	
102.000	.9849
171.000	-.4021
176.000	-.0763
181.000	-.3506
183.000	-.0612
186.000	-.1399
192.000	-.3221

BETA (2) = -4.030 ALPHA (4) = 6.240 Q(PSF) = 42.780 PO = 2119.8 RUN NO = 52.000

SECTION (1)LND GR DR PRMTRS DEPENDENT VARIABLE CP

DUMMY 1.0000

TAP	
102.000	.9870
171.000	-.3536
176.000	-.0330
181.000	-.2971
183.000	-.0178
186.000	-.1035
192.000	-.2955

BETA (3) = -2.950 ALPHA (1) = .010 Q(PSF) = 42.832 PO = 2119.9 RUN NO = 53.000

SECTION (1)LND GR DR PRMTRS DEPENDENT VARIABLE CP

DUMMY 1.0000

TAP	
102.000	.9814
171.000	-.5178
176.000	-.1576
181.000	-.4715
183.000	-.1476
186.000	-.2059
192.000	-.3490

DATE 27 APR 77 OA163B PRESSURE DATA LISTING (RFPP06)

OA163B NOSE/MAIN GEAR DOOR PERIMETERS

BETA (3) = -2.950 ALPHA (2) = 2.100 Q(PSF) = 42.852 PO = 2119.9 RUN NO = 53.000

SECTION (1)LND GR DR PRMTRS DEPENDENT VARIABLE CP

DUMMY 1.0000

TAP	
102.000	.9854
171.000	-.4657
176.000	-.1114
181.000	-.4134
183.000	-.0993
186.000	-.1728
192.000	-.3347

BETA (3) = -2.950 ALPHA (3) = 4.150 Q(PSF) = 42.872 PO = 2119.9 RUN NO = 53.000

SECTION (1)LND GR DR PRMTRS DEPENDENT VARIABLE CP

DUMMY 1.0000

TAP	
102.000	.9879
171.000	-.4174
176.000	-.0744
181.000	-.3630
183.000	-.0552
186.000	-.1369
192.000	-.3174

BETA (3) = -2.950 ALPHA (4) = 6.220 Q(PSF) = 42.842 PO = 2119.9 RUN NO = 53.000

SECTION (1)LND GR DR PRMTRS DEPENDENT VARIABLE CP

DUMMY 1.0000

TAP	
102.000	.9841
171.000	-.3649
176.000	-.0360
181.000	-.3165
183.000	-.0098
186.000	-.1036
192.000	-.2885

OA163B NOSE/MAIN GEAR DOOR PERIMETERS (RFPP06)

BETA (4) = -2.020 ALPHA (1) = .040 Q(PSF) = 42.837 PO = 2119.8 RUN NO = 54.000

SECTION (1)LND GR DR PRMTRS DEPENDENT VARIABLE C>

DUMMY 1.0000

TAP	
102.000	.9860
171.000	-.5338
176.000	-.1566
181.000	-.4705
183.000	-.1415
186.000	-.2059
192.000	-.3429

BETA (4) = -2.020 ALPHA (2) = 2.090 Q(PSF) = 42.837 PO = 2119.8 RUN NO = 54.000

SECTION (1)LND GR DR PRMTRS DEPENDENT VARIABLE C>

DUMMY 1.0000

TAP	
102.000	.9869
171.000	-.4805
176.000	-.1126
181.000	-.4271
183.000	-.0924
186.000	-.1690
192.000	-.3340

BETA (4) = -2.020 ALPHA (3) = 4.150 Q(PSF) = 42.857 PO = 2119.8 RUN NO = 54.000

SECTION (1)LND GR DR PRMTRS DEPENDENT VARIABLE C>

DUMMY 1.0000

TAP	
102.000	.9871
171.000	-.4282
176.000	-.0703
181.000	-.3808
183.000	-.0471
186.000	-.1358
192.000	-.3136

OA163B NOSE/MAIN GEAR DOOR PERIMETERS (RFPP06)

BETA (4) = -2.020 ALPHA (4) = 6.220 Q(PSF) = 42.857 PO = 2119.8 RUN NO = 54.000

SECTION (1)LND GR DR PRMTRS DEPENDENT VARIABLE CP

DUMMY 1.0000

TAP	
102.000	.9837
171.000	-.3745
176.000	-.0328
181.000	-.3433
183.000	-.0007
186.000	-.1002
192.000	-.2885

BETA (5) = -1.020 ALPHA (1) = .030 Q(PSF) = 42.815 PO = 2119.8 RUN NO = 55.000

SECTION (1)LND GR DR PRMTRS DEPENDENT VARIABLE CP

DUMMY 1.0000

TAP	
102.000	.9891
171.000	-.5419
176.000	-.1549
181.000	-.4764
183.000	-.1347
186.000	-.2083
192.000	-.3520

BETA (5) = -1.020 ALPHA (2) = 2.100 Q(PSF) = 42.815 PO = 2119.8 RUN NO = 55.000

SECTION (1)LND GR DR PRMTRS DEPENDENT VARIABLE CP

DUMMY 1.0000

TAP	
102.000	.9873
171.000	-.4882
176.000	-.1085
181.000	-.4358
183.000	-.0833
186.000	-.1699
192.000	-.3289

OA163B NOSE/MAIN GEAR DOOR PERIMETERS (RFPP06)

BETA (5) = -1.020 ALPHA (3) = 4.150 Q(PSF) = 42.615 PO = 2119.8 RUN NO = 55.000

SECTION (1)LND GR DR PRMTRS DEPENDENT VARIABLE Cp

DUMMY 1.0000

TAP	
102.000	.9873
171.000	-.4394
176.000	-.0673
181.000	-.3990
183.000	-.0400
186.000	-.1368
192.000	-.3124

BETA (5) = -1.020 ALPHA (4) = 6.240 Q(PSF) = 42.615 PO = 2119.8 RUN NO = 55.000

SECTION (1)LND GR DR PRMTRS DEPENDENT VARIABLE Cp

DUMMY 1.0000

TAP	
102.000	.9887
171.000	-.3820
176.000	-.0320
181.000	-.3557
183.000	.0063
186.000	-.0975
192.000	-.2799

BETA (6) = .000 ALPHA (1) = .010 Q(PSF) = 42.797 PO = 2119.8 RUN NO = 56.000

SECTION (1)LND GR DR PRMTRS DEPENDENT VARIABLE Cp

DUMMY 1.0000

TAP	
102.000	.9849
171.000	-.5409
176.000	-.1516
181.000	-.4816
183.000	-.1325
186.000	-.2079
192.000	-.3610

OA163B NOSE/MAIN GEAR DOOR PERIMETERS (RFPP06)

BETA (6) = .000 ALPHA (2) = 2.100 Q(PSF) = 42.787 PO = 2119.8 RUN NO = 56.000

SECTION (1)LND GR DR PRMTRS DEPENDENT VARIABLE CP

DUMMY 1.0000

TAP	
102.000	.9879
171.000	-.4965
176.000	-.1055
181.000	-.4461
183.000	-.0803
186.000	-.1740
192.000	-.3387

BETA (6) = .000 ALPHA (3) = 4.160 Q(PSF) = 42.787 PO = 2119.8 RUN NO = 56.000

SECTION (1)LND GR DR PRMTRS DEPENDENT VARIABLE CP

DUMMY 1.0000

TAP	
102.000	.9885
171.000	-.4389
176.000	-.0613
181.000	-.4036
183.000	-.0330
186.000	-.1390
192.000	-.3152

BETA (6) = .000 ALPHA (4) = 6.220 Q(PSF) = 42.787 PO = 2119.8 RUN NO = 56.000

SECTION (1)LND GR DR PRMTRS DEPENDENT VARIABLE CP

DUMMY 1.0000

TAP	
102.000	.9851
171.000	-.3788
176.000	-.0270
181.000	-.3606
183.000	.0144
186.000	-.1018
192.000	-.2855

OA163B NOSE/MAIN GEAR DOOR PERIMETERS (RFPP05)

BETA (7) = 1.000 ALPHA (1) = .020 Q(PSF) = 42.847 PO = 2119.9 RUN NO = 57.000

SECTION (1)LND GR DR PRMTRS DEPENDENT VARIABLE CP

DUMMY 1.0000

TAP	
102.000	.9863
171.000	-.5464
176.000	-.1474
181.000	-.4921
183.000	-.1303
186.000	-.2138
192.000	-.3762

BETA (7) = 1.000 ALPHA (2) = 2.080 Q(PSF) = 42.847 PO = 2119.9 RUN NO = 57.000

SECTION (1)LND GR DR PRMTRS DEPENDENT VARIABLE CP

DUMMY 1.0000

TAP	
102.000	.9821
171.000	-.4940
176.000	-.1004
181.000	-.4477
183.000	-.0782
186.000	-.1779
192.000	-.3540

BETA (7) = 1.000 ALPHA (3) = 4.150 Q(PSF) = 42.847 PO = 2119.9 RUN NO = 57.000

SECTION (1)LND GR DR PRMTRS DEPENDENT VARIABLE CP

DUMMY 1.0000

TAP	
102.000	.9856
171.000	-.4416
176.000	-.0581
181.000	-.3983
183.000	-.0299
186.000	-.1416
192.000	-.3251

DATE 27 APR 77 OA163B PRESSURE DATA LISTING (RFPP06)

OA163B NOSE/MAIN GEAR DOOR PERIMETERS

BETA (7) = 1.000 ALPHA (4) = 6.240 Q(PSF) = 42.847 PO = 2119.9 RUN NO = 57.000

SECTION (1)LND GR DR PRMTRS DEPENDENT VARIABLE CP

DUMMY 1.0000

TAP	
102.000	.9820
171.000	-.3857
176.000	-.0169
181.000	-.3463
183.000	.0184
186.000	-.0997
192.000	-.2829

BETA (8) = 1.980 ALPHA (1) = .010 Q(PSF) = 42.860 PO = 2119.9 RUN NO = 58.000

SECTION (1)LND GR DR PRMTRS DEPENDENT VARIABLE CP

DUMMY 1.0000

TAP	
102.000	.9825
171.000	-.5443
176.000	-.1404
181.000	-.5081
183.000	-.1283
186.000	-.2137
192.000	-.3881

BETA (8) = 1.980 ALPHA (2) = 2.110 Q(PSF) = 42.860 PO = 2119.9 RUN NO = 58.000

SECTION (1)LND GR DR PRMTRS DEPENDENT VARIABLE CP

DUMMY 1.0000

TAP	
102.000	.9818
171.000	-.4961
176.000	-.0955
181.000	-.4557
183.000	-.0774
186.000	-.1773
192.000	-.3692

OA163B NOSE/MAIN GE/R DOOR PERIMETERS (RFPP06)

BETA (8) = 1.980 ALPHA (3) = 4.160 Q(PSF) = 42.860 PO = 2119.9 RUN NO = 58.000

SECTION (1)LND GR DR PRMTRS DEPENDENT VARIABLE CP

DUMMY 1.0000

TAP	
102.000	.9790
171.000	-.4449
176.000	-.0521
181.000	-.4006
183.000	-.0279
186.000	-.1397
192.000	-.3338

BETA (8) = 1.980 ALPHA (4) = 6.240 Q(PSF) = 42.860 PO = 2119.9 RUN NO = 58.000

SECTION (1)LND GR DR PRMTRS DEPENDENT VARIABLE CP

DUMMY 1.0000

TAP	
102.000	.9784
171.000	-.3963
176.000	-.0138
181.000	-.3440
183.000	.0224
186.000	-.1004
192.000	-.2878

BETA (9) = 2.980 ALPHA (1) = .010 Q(PSF) = 42.877 PO = 2119.9 RUN NO = 59.000

SECTION (1)LND GR DR PRMTRS DEPENDENT VARIABLE CP

DUMMY 1.0000

TAP	
102.000	.9799
171.000	-.5458
176.000	-.1365
181.000	-.5318
183.000	-.1254
186.000	-.2129
192.000	-.3933

0A163B NOSE/MAIN GEAR DOOR PERIMETERS (RFPP06)

BETA (9) = 2.980 ALPHA (2) = 2.100 Q(PSF) = 42.877 PO = 2119.9 RUN NO = 59.000

SECTION (1)LND GR DR PRMTRS DEPENDENT VARIABLE CP

DUMMY 1.0000

TAP	
102.000	.9781
171.000	-.5073
176.000	-.0922
181.000	-.4741
183.000	-.0781
186.000	-.1776
192.000	-.3751

BETA (9) = 2.980 ALPHA (3) = 4.150 Q(PSF) = 42.877 PO = 2119.9 RUN NO = 59.000

SECTION (1)LND GR DR PRMTRS DEPENDENT VARIABLE CP

DUMMY 1.0000

TAP	
102.000	.9743
171.000	-.4550
176.000	-.0501
181.000	-.4167
183.000	-.0249
186.000	-.1377
192.000	-.3422

BETA (9) = 2.980 ALPHA (4) = 6.230 Q(PSF) = 42.877 PO = 2119.9 RUN NO = 59.000

SECTION (1)LND GR DR PRMTRS DEPENDENT VARIABLE CP

DUMMY 1.0000

TAP	
102.000	.9735
171.000	-.4008
176.000	-.0128
181.000	-.3554
183.000	.0244
186.000	-.1005
192.000	-.3026

OA163B NOSE/MAIN GEAR DOOR PERIMETERS (RFPP06)

BETA (10) = 4.060 ALPHA (1) = .020 Q(PSF) = 42.825 PO = 2119.9 RUN NO = 60.000

SECTION (1)LND GR DR PRMTRS DEPENDENT VARIABLE CP

DUMMY 1.0000

TAP	
102.000	.9761
171.000	-.5561
176.000	-.1333
181.000	-.5631
183.000	-.1292
186.000	-.2126
192.000	-.3927

BETA (10) = 4.060 ALPHA (2) = 2.090 Q(PSF) = 42.825 PO = 2119.9 RUN NO = 60.000

SECTION (1)LND GR DR PRMTRS DEPENDENT VARIABLE CP

DUMMY 1.0000

TAP	
102.000	.9746
171.000	-.5122
176.000	-.0925
181.000	-.5021
183.000	-.0784
186.000	-.1803
192.000	-.3801

BETA (10) = 4.060 ALPHA (3) = 4.160 Q(PSF) = 42.825 PO = 2119.9 RUN NO = 60.000

SECTION (1)LND GR DR PRMTRS DEPENDENT VARIABLE CP

DUMMY 1.0000

TAP	
102.000	.9737
171.000	-.4553
176.000	-.0450
181.000	-.4442
183.000	-.0289
186.000	-.1388
192.000	-.3484

DATE 27 APR 77 OA163B PRESSURE DATA LISTING

OA163B NOSE/MAIN GEAR DOOR PERIMETERS (RFPP06)

BETA (10) = 4.060 ALPHA (4) = 6.230 Q(PSF) = 42.825 PO = 2119.9 RUN NO = 60.000

SECTION (1)LND GR DR PRMTRS DEPENDENT VARIABLE CP

DUMMY 1.0000

TAP	
102.000	.9685
171.000	-.3956
176.000	-.0068
181.000	-.3795
183.000	.0265
186.000	-.0997
192.000	-.3117

BETA (11) = 5.010 ALPHA (1) = .050 Q(PSF) = 42.762 PO = 2119.9 RUN NO = 61.000

SECTION (1)LND GR DR PRMTRS DEPENDENT VARIABLE CP

DUMMY 1.0000

TAP	
102.000	.9728
171.000	-.5616
176.000	-.1256
181.000	-.5929
183.000	-.1286
186.000	-.2102
192.000	-.3938

BETA (11) = 5.010 ALPHA (2) = 2.090 Q(PSF) = 42.762 PO = 2119.9 RUN NO = 61.000

SECTION (1)LND GR DR PRMTRS DEPENDENT VARIABLE CP

DUMMY 1.0000

TAP	
102.000	.9705
171.000	-.5118
176.000	-.0857
181.000	-.5351
183.000	-.0807
186.000	-.1758
192.000	-.3849

OA163B NOSE/MAIN GEAR DOOR PERIMETERS (RFPP06)

BETA (11) = 5.010 ALPHA (3) = 4.160 Q(PSF) = 42.762 PO = 2119.9 RUN NO = 61.000

SECTION (1)LND GR DR PRMTRS DEPENDENT VARIABLE CP

DUMMY 1.0000

TAP	
102.000	.9612
171.000	-.4516
176.000	-.0421
181.000	-.4728
183.000	-.0300
186.000	-.1369
192.000	-.3619

BETA (11) = 5.010 ALPHA (4) = 6.250 Q(PSF) = 42.762 PO = 2119.9 RUN NO = 61.000

SECTION (1)LND GR DR PRMTRS DEPENDENT VARIABLE CP

DUMMY 1.0000

TAP	
102.000	.9640
171.000	-.3902
176.000	.0002
181.000	-.4003
183.000	.0295
186.000	-.0976
192.000	-.3307

DATE 27 APR 77 OA163B PRESSURE DATA LISTING (RFPP07) (27 APR 77)

OA163B NOSE/MAIN GEAR DOOR PERIMETERS

REFERENCE DATA

SREF =	2690.0000 SQ.FT.	XMRP =	1076.7000 IN. XO		
LREF =	474.8100 INCHES	YMRP =	.0000 IN. YO		
BREF =	936.6800 INCHES	ZMRP =	375.0000 IN. ZO		
SCALE =	.0405				

PARAMETRIC DATA

SPDBRK =	25.000	BDFLAP =	.000
ELV-L =	.000	ELV-R =	.000
PHI-N =	66.000	THETAN =	108.000
PHI-ML =	26.000	THETML =	4.000
PHI-MR =	26.000	THETMR =	4.000

BETA (1) = -5.050 ALPHA (1) = .000 Q(PSF) = 42.770 PO = 2117.8 RUN NO = 62.000

SECTION (1)LND GR DR PRMTRS DEPENDENT VARIABLE CP

DUMMY 1.0000

TAP	
102.000	.9660
171.000	-.5467
176.000	-.1770
181.000	-.4359
183.000	-.0208
186.000	-.2284
192.000	-.4770

BETA (1) = -5.050 ALPHA (2) = 2.070 Q(PSF) = 42.770 PO = 2117.8 RUN NO = 62.000

SECTION (1)LND GR DR PRMTRS DEPENDENT VARIABLE CP

DUMMY 1.0000

TAP	
102.000	.9731
171.000	-.4648
176.000	-.1382
181.000	-.3879
183.000	.0275
186.000	-.1968
192.000	-.4461

BETA (1) = -5.050 ALPHA (3) = 4.130 Q(PSF) = 42.770 PO = 2117.8 RUN NO = 62.000

SECTION (1)LND GR DR PRMTRS DEPENDENT VARIABLE CP

DUMMY 1.0000

TAP	
102.000	.9794
171.000	-.3867
176.000	-.0954
181.000	-.3242
183.000	.0718
186.000	-.1589
192.000	-.4218

OA163B NOSE/MAIN GEAR DOOR PERIMETERS (RFPP07)

BETA (1) = -5.050 ALPHA (4) = 6.190 Q(PSF) = 42.770 PO = 2117.8 RUN NO = 62.000

SECTION (1)LND GR DR PRMTRS DEPENDENT VARIABLE CP

DUMMY 1.0000

TAP	
102.000	.9818
171.000	-.3108
176.000	-.0563
181.000	-.2553
183.000	.1194
186.000	-.1229
192.000	-.3950

BETA (2) = -2.020 ALPHA (1) = .000 Q(PSF) = 42.842 PO = 2117.8 RUN NO = 63.000

SECTION (1)LND GR DR PRMTRS DEPENDENT VARIABLE CP

DUMMY 1.0000

TAP	
102.000	.9790
171.000	-.5792
176.000	-.1908
181.000	-.4222
183.000	.0113
186.000	-.2371
192.000	-.5377

BETA (2) = -2.030 ALPHA (2) = 2.070 Q(PSF) = 42.842 PO = 2117.8 RUN NO = 63.000

SECTION (1)LND GR DR PRMTRS DEPENDENT VARIABLE CP

DUMMY 1.0000

TAP	
102.000	.9881
171.000	-.5039
176.000	-.1533
181.000	-.3614
183.000	.0578
186.000	-.2038
192.000	-.5171

DATE 27 APR 77 OA163B PRESSURE DATA LISTING (RFPP07)

OA163B NOSE/MAIN GEAR DOOR PERIMETERS

BETA (2) = -2.020 ALPHA (3) = 4.120 Q(PSF) = 42.842 PO = 2117.8 RUN NO = 63.000

SECTION (1)LND GR DR PRMTRS DEPENDENT VARIABLE CP

DUMMY 1.0000

TAP	
102.000	.9828
171.000	-.4249
176.000	-.1135
181.000	-.2888
183.000	.1070
186.000	-.1710
192.000	-.4927

BETA (2) = -2.030 ALPHA (4) = 6.190 Q(PSF) = 42.842 PO = 2117.8 RUN NO = 63.000

SECTION (1)LND GR DR PRMTRS DEPENDENT VARIABLE CP

DUMMY 1.0000

TAP	
102.000	.9856
171.000	-.3566
176.000	-.0781
181.000	-.2209
183.000	.1541
186.000	-.1334
192.000	-.4665

BETA (3) = -1.030 ALPHA (1) = .000 Q(PSF) = 42.870 PO = 2117.8 RUN NO = 64.000

SECTION (1)LND GR DR PRMTRS DEPENDENT VARIABLE CP

DUMMY 1.0000

TAP	
102.000	.9827
171.000	-.5899
176.000	-.1984
181.000	-.4022
183.000	.0143
186.000	-.2416
192.000	-.5640

OA163B NOSE/MAIN GEAR DOOR PERIMETERS (RFPP07)

BETA (3) = -1.030 ALPHA (2) = 2.080 Q(PSF) = 42.870 PO = 2117.8 RUN NO = 64.000

SECTION (1)LND GR DR PRMTRS DEPENDENT VARIABLE CP

DUMMY 1.0000

TAP	
102.000	.9851
171.000	-.5183
176.000	-.1585
181.000	-.3484
183.000	.0665
186.000	-.2087
192.000	-.5431

BETA (3) = -1.030 ALPHA (3) = 4.120 Q(PSF) = 42.870 PO = 2117.8 RUN NO = 64.000

SECTION (1)LND GR DR PRMTRS DEPENDENT VARIABLE CP

DUMMY 1.0000

TAP	
102.000	.9892
171.000	-.4453
176.000	-.1189
181.000	-.2634
183.000	.1114
186.000	-.1725
192.000	-.5098

BETA (3) = -1.040 ALPHA (4) = 6.200 Q(PSF) = 42.870 PO = 2117.8 RUN NO = 64.000

SECTION (1)LND GR DR PRMTRS DEPENDENT VARIABLE CP

DUMMY 1.0000

TAP	
102.000	.9842
171.000	-.3867
176.000	-.0793
181.000	-.1982
183.000	.1584
186.000	-.1357
192.000	-.4832

OA163B NOSE/MAIN GEAR DOOR PERIMETERS (RFPP07)

BETA (4) = -.010 ALPHA (1) = .000 Q(PSF) = 42.835 PO = 2117.8 RUN NO = 65.000

SECTION (1)LND GR DR PRMTRS DEPENDENT VARIABLE CP

DUMMY 1.0000

TAP	
102.000	.9853
171.000	-.5968
176.000	-.2007
181.000	-.3636
183.000	.0143
186.000	-.2419
192.000	-.5877

BETA (4) = -.010 ALPHA (2) = 2.050 Q(PSF) = 42.835 PO = 2117.8 RUN NO = 65.000

SECTION (1)LND GR DR PRMTRS DEPENDENT VARIABLE CP

DUMMY 1.0000

TAP	
102.000	.9864
171.000	-.5320
176.000	-.1677
181.000	-.3056
183.000	.0626
186.000	-.2100
192.000	-.5630

BETA (4) = -.010 ALPHA (3) = 4.120 Q(PSF) = 42.835 PO = 2117.8 RUN NO = 65.000

SECTION (1)LND GR DR PRMTRS DEPENDENT VARIABLE CP

DUMMY 1.0000

TAP	
102.000	.9906
171.000	-.4775
176.000	-.1207
181.000	-.2416
183.000	.1101
186.000	-.1761
192.000	-.5376

OA163B NOSE/MAIN GEAR DOOR PERIMETERS (RFPP07)

BETA (4) = -.010 ALPHA (4) = 6.200 Q(PSF) = 42.835 PO = 2117.8 RUN NO = 65.000

SECTION (1)LND GR DR PRMTRS DEPENDENT VARIABLE CP

DUMMY 1.0000

TAP	
102.000	.9787
171.000	-.4191
176.000	-.0745
181.000	-.1786
183.000	.1589
186.000	-.1412
192.000	-.4931

BETA (5) = .980 ALPHA (1) = .000 Q(PSF) = 42.865 PO = 2117.8 RUN NO = 66.000

SECTION (1)LND GR DR PRMTRS DEPENDENT VARIABLE CP

DUMMY 1.0000

TAP	
102.000	.9911
171.000	-.6163
176.000	-.2062
181.000	-.3523
183.000	.0113
186.000	-.2485
192.000	-.6119

BETA (5) = .980 ALPHA (2) = 2.080 Q(PSF) = 42.865 PO = 2117.8 RUN NO = 66.000

SECTION (1)LND GR DR PRMTRS DEPENDENT VARIABLE CP

DUMMY 1.0000

TAP	
102.000	.9878
171.000	-.5570
176.000	-.1654
181.000	-.2879
183.000	.0645
186.000	-.2106
192.000	-.5822

OA163B NOSE/MAIN GEAR DOOR PERIMETERS (RFPP07)

BETA (5) = .980 ALPHA (3) = 4.120 Q(PSF) = 42.865 PO = 2117.8 RUN NO = 66.000

SECTION (1)LND GR DR PRMTRS DEPENDENT VARIABLE CP

DUMMY 1.0000

TAP	
102.000	.9867
171.000	-.5113
176.000	-.1177
181.000	-.2328
183.000	.1092
186.000	-.1803
192.000	-.5489

BETA (5) = .990 ALPHA (4) = 6.200 Q(PSF) = 42.865 PO = 2117.8 RUN NO = 66.000

SECTION (1)LND GR DR PRMTRS DEPENDENT VARIABLE CP

DUMMY 1.0000

TAP	
102.000	.9832
171.000	-.4708
176.000	-.0712
181.000	-.1749
183.000	.1613
186.000	-.1426
192.000	-.5140

BETA (6) = 1.980 ALPHA (1) = .010 Q(PSF) = 42.770 PO = 2117.8 RUN NO = 67.000

SECTION (1)LND GR DR PRMTRS DEPENDENT VARIABLE CP

DUMMY 1.0000

TAP	
102.000	.9869
171.000	-.6380
176.000	-.2051
181.000	-.3571
183.000	.0123
186.000	-.2504
192.000	-.6223

OA163B NOSE/MAIN GEAR DOOR PERIMETERS (RFPP07)

BETA (6) = 1.980 ALPHA (2) = 2.080 Q(PSF) = 42.770 PO = 2117.8 RUN NO = 67.000

SECTION (1)LND GR DR PRMTRS DEPENDENT VARIABLE CP

DUMMY 1.0000

TAP	
102.000	.9876
171.000	-.5878
176.000	-.1621
181.000	-.3003
183.000	.0628
186.000	-.2156
192.000	-.5933

BETA (6) = 1.980 ALPHA (3) = 4.120 Q(PSF) = 42.770 PO = 2117.8 RUN NO = 67.000

SECTION (1)LND GR DR PRMTRS DEPENDENT VARIABLE CP

DUMMY 1.0000

TAP	
102.000	.9847
171.000	-.5539
176.000	-.1138
181.000	-.2430
183.000	.1123
186.000	-.1834
192.000	-.5600

BETA (6) = 1.980 ALPHA (4) = 6.200 Q(PSF) = 42.770 PO = 2117.8 RUN NO = 67.000

SECTION (1)LND GR DR PRMTRS DEPENDENT VARIABLE CP

DUMMY 1.0000

TAP	
102.000	.9839
171.000	-.5133
176.000	-.0745
181.000	-.1969
183.000	.1630
186.000	-.1493
192.000	-.5235

OA163B NOSE/MAIN GEAR DOOR PERIMETERS (RFPP08) (27 APR 77)

REFERENCE DATA

SREF =	2690.0000 SQ.FT.	XMRP =	1076.7000 IN. XO		
LREF =	474.8100 INCHES	YMRP =	.0000 IN. YO		
BREF =	936.6800 INCHES	ZMRP =	375.0000 IN. ZO		
SCALE =	.0405				

PARAMETRIC DATA

SPDBRK =	25.000	BDFLAP =	.000
ELV-L =	.000	ELV-R =	.000
PHI-N =	66.000	THETAN =	108.000
PHI-ML =	32.200	THETML =	5.000
PHI-MR =	32.200	THETMR =	5.000

BETA (1) = -5.030 ALPHA (1) = .000 Q(PSF) = 42.787 PO = 2116.4 RUN NO = 68.000

SECTION (1)LND GR DR PRMTRS DEPENDENT VARIABLE CP

DUMMY 1.0000

TAP	
102.000	.9618
171.000	-.5440
176.000	-.1755
181.000	-.4306
183.000	-.0178
186.000	-.2257
192.000	-.4696

BETA (1) = -5.040 ALPHA (2) = 2.090 Q(PSF) = 42.787 PO = 2116.4 RUN NO = 68.000

SECTION (1)LND GR DR PRMTRS DEPENDENT VARIABLE CP

DUMMY 1.0000

TAP	
102.000	.9763
171.000	-.4635
176.000	-.1358
181.000	-.3889
183.000	.0274
186.000	-.1923
192.000	-.4449

BETA (1) = -5.030 ALPHA (3) = 4.130 Q(PSF) = 42.787 PO = 2116.4 RUN NO = 68.000

SECTION (1)LND GR DR PRMTRS DEPENDENT VARIABLE CP

DUMMY 1.0000

TAP	
102.000	.9815
171.000	-.3920
176.000	-.0968
181.000	-.3253
183.000	.0740
186.000	-.1574
192.000	-.4220

OA163B NOSE/MAIN GEAR DOOR PERIMETERS (RFPP08)

BETA (1) = -5.030 ALPHA (1) = 6.210 Q(PSF) = 42.787 PO = 2116.4 RUN NO = 68.000

SECTION (1)LND GR DR PRMTRS DEPENDENT VARIABLE CP

DUMMY 1.0000

TAP	
102.000	.9862
171.000	-.3141
176.000	-.0543
181.000	-.2575
183.000	.1195
186.000	-.1220
192.000	-.4038

BETA (2) = -2.020 ALPHA (1) = .000 Q(PSF) = 42.880 PO = 2116.5 RUN NO = 69.000

SECTION (1)LND GR DR PRMTRS DEPENDENT VARIABLE CP

DUMMY 1.0000

TAP	
102.000	.9862
171.000	-.5819
176.000	-.1891
181.000	-.4218
183.000	.0113
186.000	-.2334
192.000	-.5372

BETA (2) = -2.020 ALPHA (2) = 2.060 Q(PSF) = 42.880 PO = 2116.5 RUN NO = 69.000

SECTION (1)LND GR DR PRMTRS DEPENDENT VARIABLE CP

DUMMY 1.0000

TAP	
102.000	.9848
171.000	-.5027
176.000	-.1536
181.000	-.3548
183.000	.0575
186.000	-.2029
192.000	-.5208

0A163B NOSE/MAIN GEAR DOOR PERIMETERS (RFPP08)

BETA (2) = -2.020 ALPHA (3) = 4.120 Q(PSF) = 12.880 PO = 2116.5 RUN NO = 69.000

SECTION (1)LND GR DR PRMTRS DEPENDENT VARIABLE CP

DUMMY 1.0000

TAP	
102.000	.9871
171.000	-.4247
176.000	-.1142
181.000	-.2920
183.000	.1047
186.000	-.1695
192.000	-.4949

BETA (2) = -2.020 ALPHA (4) = 6.200 Q(PSF) = 12.880 PO = 2116.5 RUN NO = 69.000

SECTION (1)LND GR DR PRMTRS DEPENDENT VARIABLE CP

DUMMY 1.0000

TAP	
102.000	.9821
171.000	-.3545
176.000	-.0753
181.000	-.2184
183.000	.1524
186.000	-.1348
192.000	-.4641

BETA (3) = -1.020 ALPHA (1) = .000 Q(PSF) = 12.887 PO = 2116.4 RUN NO = 70.000

SECTION (1)LND GR DR PRMTRS DEPENDENT VARIABLE CP

DUMMY 1.0000

TAP	
102.000	.9902
171.000	-.5953
176.000	-.1982
181.000	-.3957
183.000	.0173
186.000	-.2395
192.000	-.5735

OA163B NOSE/MAIN GEAR DOOR PERIMETERS (RFP.08)

BETA (3) = -1.010 ALPHA (2) = 2.070 Q(PSF) = 42.887 PO = 2116.4 RUN NO = 70.000

SECTION (1)LND GR DR PRMTRS DEPENDENT VARIABLE CP

DUMMY 1.0000

TAP	
102.000	.9877
171.000	-.5164
176.000	-.1565
181.000	-.3455
183.000	.0645
186.000	-.2098
192.000	-.5408

BETA (3) = -1.020 ALPHA (3) = 4.140 Q(PSF) = 42.887 PO = 2116.4 RUN NO = 70.000

SECTION (1)LND GR DR PRMTRS DEPENDENT VARIABLE CP

DUMMY 1.0000

TAP	
102.000	.9866
171.000	-.4471
176.000	-.1226
181.000	-.2798
183.000	.1131
186.000	-.1720
192.000	-.5157

BETA (3) = -1.020 ALPHA (4) = 6.210 Q(PSF) = 42.887 PO = 2116.4 RUN NO = 70.000

SECTION (1)LND GR DR PRMTRS DEPENDENT VARIABLE CP

DUMMY 1.0000

TAP	
102.000	.9834
171.000	-.3844
176.000	-.0770
181.000	-.1946
183.000	.1559
186.000	-.1363
192.000	-.4852

DATE 27 APR 77 0A163B PRESSURE DATA LISTING (RFPP08)

0A163B NOSE/MAIN GEAR DOOR PERIMETERS

BETA (4) = .010 ALPHA (1) = -.010 Q(PSF) = 42.855 PO = 2116.4 RUN NO = 71.000

SECTION (1)LND GR DR PRMTRS DEPENDENT VARIABLE CP

DUMMY 1.0000

TAP	
102.000	.9899
171.000	-.6014
176.000	-.2060
181.000	-.3710
183.000	.0153
186.000	-.2412
192.000	-.5979

BETA (4) = .000 ALPHA (2) = 2.050 Q(PSF) = 42.855 PO = 2116.4 RUN NO = 71.000

SECTION (1)LND GR DR PRMTRS DEPENDENT VARIABLE CP

DUMMY 1.0000

TAP	
102.000	.9887
171.000	-.5300
176.000	-.1657
181.000	-.3046
183.000	.0616
186.000	-.2100
192.000	-.5678

BETA (4) = .010 ALPHA (3) = 4.120 Q(PSF) = 42.855 PO = 2116.4 RUN NO = 71.000

SECTION (1)LND GR DR PRMTRS DEPENDENT VARIABLE CP

DUMMY 1.0000

TAP	
102.000	.9876
171.000	-.4742
176.000	-.1206
181.000	-.2435
183.000	.1100
186.000	-.1760
192.000	-.5373

OA163B NOSE/MAIN GEAR DOOR PERIMETERS (RFPP08)

BETA (4) = .010 ALPHA (4) = 6.200 Q(PSF) = 42.855 PO = 2116.4 RUN NO = 71.000

SECTION (1)LND GR DR PRMTRS DEPENDENT VARIABLE CP

DUMMY 1.0000

TAP	
102.000	.9813
171.000	-.4232
176.000	-.0733
181.000	-.1792
183.000	.1605
186.000	-.1348
192.000	-.5016

BETA (5) = 1.000 ALPHA (1) = .000 Q(PSF) = 42.827 PO = 2116.5 RUN NO = 72.000

SECTION (1)LND GR DR PRMTRS DEPENDENT VARIABLE CP

DUMMY 1.0000

TAP	
102.000	.9877
171.000	-.6134
176.000	-.2032
181.000	-.3534
183.000	.0113
186.000	-.2435
192.000	-.6108

BETA (5) = 1.000 ALPHA (2) = 2.060 Q(PSF) = 42.827 PO = 2116.5 RUN NO = 72.000

SECTION (1)LND GR DR PRMTRS DEPENDENT VARIABLE CP

DUMMY 1.0000

TAP	
102.000	.9866
171.000	-.5353
176.000	-.1664
181.000	-.2947
183.000	.0608
186.000	-.2128
192.000	-.5857

OA163B NOSE/MAIN GEAR DOOR PERIMETERS (RFPP08)

BETA (5) = 1.000 ALPHA (3) = 4.140 Q(PSF) = 42.827 PO = 2116.5 RUN NO = 72.000

SECTION (1)LND GR DR PRMTRS DEPENDENT VARIABLE CP

DUMMY 1.0000

TAP	
102.000	.9864
171.000	-.5115
176.000	-.1176
181.000	-.2354
183.000	.1110
186.000	-.1780
192.000	-.5505

BETA (5) = 1.000 ALPHA (4) = 6.200 Q(PSF) = 42.827 PO = 2116.5 RUN NO = 72.000

SECTION (1)LND GR DR PRMTRS DEPENDENT VARIABLE CP

DUMMY 1.0000

TAP	
102.000	.9832
171.000	-.4703
176.000	-.0751
181.000	-.1817
183.000	.1601
186.000	-.1425
192.000	-.5157

BETA (6) = 1.990 ALPHA (1) = .000 Q(PSF) = 42.890 PO = 2116.5 RUN NO = 73.000

SECTION (1)LND GR DR PRMTRS DEPENDENT VARIABLE CP

DUMMY 1.0000

TAP	
102.000	.9848
171.000	-.6346
176.000	-.2066
181.000	-.3594
183.000	.0093
186.000	-.2478
192.000	-.6233

OA163B NOSE/MAIN GEAR DOOR PERIMETERS (RFPP08)

BETA (6) = 1.980 ALPHA (2) = 2.070 Q(PSF) = 42.890 PO = 2116.5 RUN NO = 73.000

SECTION (1)LND GR DR PRMTRS DEPENDENT VARIABLE CP

DUMMY 1.0000

TAP	
102.000	.9866
171.000	-.5882
176.000	-.1559
181.000	-.2990
183.000	.0607
186.000	-.2164
192.000	-.5928

BETA (6) = 1.980 ALPHA (3) = 4.130 Q(PSF) = 42.890 PO = 2116.5 RUN NO = 73.000

SECTION (1)LND GR DR PRMTRS DEPENDENT VARIABLE CP

DUMMY 1.0000

TAP	
102.000	.9809
171.000	-.5538
176.000	-.1123
181.000	-.2430
183.000	.1128
186.000	-.1817
192.000	-.5590

BETA (6) = 1.980 ALPHA (4) = 6.200 Q(PSF) = 42.890 PO = 2116.5 RUN NO = 73.000

SECTION (1)LND GR DR PRMTRS DEPENDENT VARIABLE CP

DUMMY 1.0000

TAP	
102.000	.9764
171.000	-.5083
176.000	-.0752
181.000	-.1941
183.000	.1624
186.000	-.1457
192.000	-.5202

OA163B NOSE/MAIN GEAR DOOR PERIMETERS (RFPP08)

BETA (7) = 5.010 ALPHA (1) = .030 Q(PSF) = 42.820 PO = 2116.5 RUN NO = 74.000

SECTION (1)LND GR DR PRMTRS DEPENDENT VARIABLE CP

DUMMY 1.0000

TAP	
102.000	.9844
171.000	-.7378
176.000	-.1706
181.000	-.4331
183.000	.0133
186.000	-.2611
192.000	-.6491

BETA (7) = 5.020 ALPHA (2) = 2.060 Q(PSF) = 42.820 PO = 2116.5 RUN NO = 74.000

SECTION (1)LND GR DR PRMTRS DEPENDENT VARIABLE CP

DUMMY 1.0000

TAP	
102.000	.9829
171.000	-.6903
176.000	-.1334
181.000	-.3626
183.000	.0655
186.000	-.2299
192.000	-.6237

BETA (7) = 5.020 ALPHA (3) = 4.120 Q(PSF) = 42.820 PO = 2116.5 RUN NO = 74.000

SECTION (1)LND GR DR PRMTRS DEPENDENT VARIABLE CP

DUMMY 1.0000

TAP	
102.000	.9804
171.000	-.6279
176.000	-.1007
181.000	-.2865
183.000	.1174
186.000	-.1946
192.000	-.5820

OA163B NOSE/MAIN GEAR DOOR PERIMETERS (RFPP08)

BETA (7) = 5.010 ALPHA (4) = 6.200 Q(PSF) = 42.820 PO = 2116.5 RUN NO = 74.000

SECTION (1)LND GR DR PRMTRS DEPENDENT VARIABLE CP

DUMMY 1.0000

TAP	
102.000	.9691
171.000	-.5293
176.000	-.0573
181.000	-.2099
183.000	.1670
185.000	-.1594
192.000	-.5413

OA1638 NOSE/MAIN GEAR DOOR PERIMETERS (RFPP09) (27 APR 77)

REFERENCE DATA

SREF = 2690.0000 SQ.FT. XMRP = 1076.7000 IN. XO
LREF = 474.8100 INCHES YMRP = .0000 IN. YO
BREF = 936.6000 INCHES ZMRP = 375.0000 IN. ZO
SCALE = .0405

PARAMETRIC DATA

SPDBRK =	25.000	BDFLAP =	.000
ELV-L =	.000	ELV-R =	.000
PHI-N =	66.000	THETAN =	108.000
PHI-ML =	32.200	THETML =	5.000
PHI-MR =	36.000	THETMR =	5.600

BETA (1) = -5.030 ALPHA (1) = .000 Q(PSF) = 42.795 PO = 2113.0 RUN NO = 75.000

SECTION (1)LND GR DR PRMTRS DEPENDENT VARIABLE CP

DUMMY 1.0000

TAP	
102.000	.9675
171.000	-.5496
176.000	-.1766
181.000	-.4350
183.000	-.0178
186.000	-.2259
192.000	-.4760

BETA (1) = -5.030 ALPHA (2) = 2.080 Q(PSF) = 42.795 PO = 2113.0 RUN NO = 75.000

SECTION (1)LND GR DR PRMTRS DEPENDENT VARIABLE CP

DUMMY 1.0000

TAP	
102.000	.9746
171.000	-.4693
176.000	-.1367
181.000	-.3356
183.000	.0284
186.000	-.1932
192.000	-.4434

BETA (1) = -5.040 ALPHA (3) = 4.130 Q(PSF) = 42.795 PO = 2113.0 RUN NO = 75.000

SECTION (1)LND GR DR PRMTRS DEPENDENT VARIABLE CP

DUMMY 1.0000

TAP	
102.000	.9200
171.000	-.3059
176.000	-.0945
181.000	-.3244
183.000	.0738
186.000	-.1530
192.000	-.4196

0A163B NOSE/MAIN GEAR DOOR PERIMETERS (RFPP09)

BETA (1) = -5.030 ALPHA (4) = 6.220 Q(PSF) = 42.795 PO = 2113.0 RUN NO = 75.000

SECTION (1)LND GR DR PRMTRS DEPENDENT VARIABLE CP

DUMMY 1.0000

TAP	
102.000	.9041
171.000	-.3035
176.000	-.0[illegible]9
181.000	-.2[illegible]3
183.000	.12[illegible]8
186.000	-.1222
192.000	-.4057

BETA (2) = -2.010 ALPHA (1) = .000 Q(PSF) = 42.930 PO = 2113.0 RUN NO = 76.000

SECTION (1)LND GR DR PRMTRS DEPENDENT VARIABLE CP

DUMMY 1.0000

TAP	
102.000	.9302
171.000	-.5774
176.000	-.1[illegible]3
181.000	-.41[illegible]2
183.000	.0122
186.000	-.2350
192.000	-.5411

BETA (2) = -2.010 ALPHA (2) = 2.080 Q(PSF) = 42.930 PO = 2113.0 RUN NO = 76.000

SECTION (1)LND GR DR PRMTRS DEPENDENT VARIABLE CP

DUMMY 1.0000

TAP	
102.000	.9329
171.000	-.5508
176.000	-.1516
181.000	-.3510
183.000	.0316
186.000	-.20[illegible]0
192.000	-.5136

ORIGINAL PAGE IS OF POOR QUALITY

OA163B NOSE/MAIN GEAR DOOR PERIMETERS (RFPP09)

BETA (2) = -2.010 ALPHA (3) = 4.140 Q(PSF) = 42.930 PO = 2113.0 RUN NO = 76.000

SECTION (1)LND GR DR PRMTRS DEPENDENT VARIABLE CP

DUMMY 1.0000

TAP	
102.000	.9853
171.000	-.4239
176.000	-.1166
181.000	-.2909
183.000	.1070
186.000	-.1680
192.000	-.4928

BETA (2) = -2.010 ALPHA (4) = 6.200 Q(PSF) = 42.930 PO = 2113.0 RUN NO = 76.000

SECTION (1)LND GR DR PRMTRS DEPENDENT VARIABLE CP

DUMMY 1.0000

TAP	
102.000	.9864
171.000	-.3549
176.000	-.0732
181.000	-.2231
183.000	.1542
186.000	-.1335
192.000	-.4693

BETA (3) = -1.020 ALPHA (1) = .000 Q(PSF) = 42.845 PO = 2112.9 RUN NO = 77.000

SECTION (1)LND GR DR PRMTRS DEPENDENT VARIABLE CP

DUMMY 1.0000

TAP	
102.000	.9890
171.000	-.5910
176.000	-.1954
181.000	-.4063
183.000	.0153
186.000	-.2419
192.000	-.5718

OA163B NOSE/MAIN GEAR DOOR PERIMETERS (RFPP09)

BETA (3) = -1.020 ALPHA (2) = 2.060 Q(PSF) = 42.845 PO = 2112.9 RUN NO = 77.000

SECTION (1)LND GR DR PRMTRS DEPENDENT VARIABLE CP

DUMMY 1.0000

TAP	
102.000	.9911
171.000	-.5226
176.000	-.1599
181.000	-.3503
183.000	.0657
186.000	.2092
192.000	-.5456

BETA (3) = -1.020 ALPHA (3) = 4.140 Q(PSF) = 42.845 PO = 2112.9 RUN NO = 77.000

SECTION (1)LND GR DR PRMTRS DEPENDENT VARIABLE CP

DUMMY 1.0000

TAP	
102.000	.9893
171.000	-.4492
176.000	-.1204
181.000	-.2843
183.000	.1098
186.000	-.1727
192.000	-.5194

BETA (3) = -1.020 ALPHA (4) = 6.210 Q(PSF) = 42.845 PO = 2112.9 RUN NO = 77.000

SECTION (1)LND GR DR PRMTRS DEPENDENT VARIABLE CP

DUMMY 1.0000

TAP	
102.000	.9872
171.000	-.3905
176.000	-.0793
181.000	-.2092
183.000	.1634
186.000	-.1397
192.000	-.4913

OA163B NOSE/MAIN GEAR DOOR PERIMETERS (RFPP09)

BETA (4) = .000 ALPHA (1) = .000 Q(PSF) = 42.915 PO = 2112.9 RUN NO = 78.000

SECTION (1)LND GR DR PRMTRS DEPENDENT VARIABLE CP

DUMMY 1.0000

TAP	
102.000	.9880
171.000	-.6023
176.000	-.2026
181.000	-.3663
183.000	.0133
186.000	-.2427
192.000	-.5919

BETA (4) = .000 ALPHA (2) = 2.090 Q(PSF) = 42.915 PO = 2112.9 RUN NO = 78.000

SECTION (1)LND GR DR PRMTRS DEPENDENT VARIABLE CP

DUMMY 1.0000

TAP	
102.000	.9905
171.000	-.5329
176.000	-.1650
181.000	-.3031
183.000	.0617
186.000	-.2094
192.000	-.5689

BETA (4) = .000 ALPHA (3) = 4.140 Q(PSF) = 42.915 PO = 2112.9 RUN NO = 78.000

SECTION (1)LND GR DR PRMTRS DEPENDENT VARIABLE CP

DUMMY 1.0000

TAP	
102.000	.9870
171.000	-.4728
176.000	-.1212
181.000	-.2428
183.000	.1097
186.000	-.1745
192.000	-.5357

OA163B NOSE/MAIN GEAR DOOR PERIMETERS (RFPP09)

BETA (4) = .000 ALPHA (4) = 6.210 Q(PSF) = 42.915 PO = 2112.9 RUN NO = 78.000

SECTION (1)LND GR DR PRMTRS DEPENDENT VARIABLE CP

DUMMY 1.0000

TAP	
102.000	.9868
171.000	-.4270
176.000	-.0761
181.000	-.1817
183.000	.1591
186.000	-.1395
192.000	-.5036

BETA (5) = 1.000 ALPHA (1) = -.010 Q(PSF) = 42.792 PO = 2112.9 RUN NO = 79.000

SECTION (1)LND GR DR PRMTRS DEPENDENT VARIABLE CP

DUMMY 1.0000

TAP	
102.000	.9880
171.000	-.6123
176.000	-.2046
181.000	-.3482
183.000	.0123
186.000	-.2447
192.000	-.6135

BETA (5) = 1.000 ALPHA (2) = 2.070 Q(PSF) = 42.792 PO = 2112.9 RUN NO = 79.000

SECTION (1)LND GR DR PRMTRS DEPENDENT VARIABLE CP

DUMMY 1.0000

TAP	
102.000	.9897
171.000	-.5550
176.000	-.1649
181.000	-.2925
183.000	.0651
186.000	-.2095
192.000	-.5876

OA163B NOSE/MAIN GEAR DOOR PERIMETERS (RFPP09)

BETA (5) = 1.000 ALPHA (3) = 4.120 Q(PSF) = 42.792 PO = 2112.9 RUN NO = 79.000

SECTION (1)LND GR DR PRMTRS DEPENDENT VARIABLE CP

DUMMY 1.0000

TAP	
102.000	.9892
171.000	-.5113
176.000	-.1137
181.000	-.2348
183.000	.1122
186.000	-.1783
192.000	-.5550

BETA (5) = 1.000 ALPHA (4) = 6.190 Q(PSF) = 42.792 PO = 2112.9 RUN NO = 79.000

SECTION (1)LND GR DR PRMTRS DEPENDENT VARIABLE CP

DUMMY 1.0000

TAP	
102.000	.9863
171.000	-.4742
176.000	-.0722
181.000	-.1800
183.000	.1604
186.000	-.1427
192.000	-.5180

BETA (6) = 1.990 ALPHA (1) = .000 Q(PSF) = 42.855 PO = 2112.9 RUN NO = 80.000

SECTION (1)LND GR DR PRMTRS DEPENDENT VARIABLE CP

DUMMY 1.0000

TAP	
102.000	.9901
171.000	-.6363
176.000	-.2065
181.000	-.3611
183.000	.0062
186.000	-.2477
192.000	-.6254

C-6

OA163B NOSE/MAIN GEAR DOOR PERIMETERS (RFPP09)

BETA (6) = 1.990 ALPHA (2) = 2.060 Q(PSF) = 42.855 PO = 2112.9 RUN NO = 80.000

SECTION (1)LND GR DR PRMTRS DEPENDENT VARIABLE CP

DUMMY 1.0000

TAP	
102.000	.9857
171.000	-.5924
176.000	-.1559
181.000	-.3031
183.000	.0617
186.000	-.2144
192.000	-.5954

BETA (6) = 1.990 ALPHA (3) = 4.120 Q(PSF) = 42.855 PO = 2112.9 RUN NO = 80.000

SECTION (1)LND GR DR PRMTRS DEPENDENT VARIABLE CP

DUMMY 1.0000

TAP	
102.000	.9847
171.000	-.5532
176.000	-.1146
181.000	-.2427
183.000	.1121
186.000	-.1822
192.000	-.5569

BETA (6) = 1.990 ALPHA (4) = 6.210 Q(PSF) = 42.855 PO = 2112.9 RUN NO = 80.000

SECTION (1)LND GR DR PRMTRS DEPENDENT VARIABLE CP

DUMMY 1.0000

TAP	
102.000	.9807
171.000	-.5106
176.000	-.0712
181.000	-.1932
183.000	.1645
186.000	-.1458
192.000	-.5242

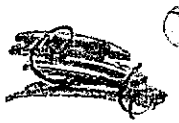

OA163B NOSE/MAIN GEAR DOOR PERIMETERS (RFPP09)

BETA (7) = 5.020 ALPHA (1) = .000 Q(PSF) = 42.877 PO = 2113.0 RUN NO = 81.000

SECTION (1)LND GR DR PRMTRS DEPENDENT VARIABLE CP

DUMMY 1.0000

TAP	
102.000	.9851
171.000	-.7397
176.000	-.1689
181.000	-.4363
183.000	.0132
186.000	-.2600
192.000	-.6512

BETA (7) = 5.020 ALPHA (2) = 2.060 Q(PSF) = 42.877 PO = 2113.0 RUN NO = 81.000

SECTION (1)LND GR DR PRMTRS DEPENDENT VARIABLE CP

DUMMY 1.0000

TAP	
102.000	.9842
171.000	-.6930
176.000	-.1317
181.000	-.3625
183.000	.0657
186.000	-.2315
192.000	-.6228

BETA (7) = 5.020 ALPHA (3) = 4.130 Q(PSF) = 42.877 PO = 2113.0 RUN NO = 81.000

SECTION (1)LND GR DR PRMTRS DEPENDENT VARIABLE CP

DUMMY 1.0000

TAP	
102.000	.9837
171.000	-.6295
176.000	-.0957
181.000	-.2858
183.000	.1195
186.000	-.1988
192.000	-.5861

OA163B NOSE/MAIN GEAR DOOR PERIMETERS (RFPP09)

BETA (7) = 5.020 ALPHA (4) = 6.200 Q(PSF) = 42.877 PO = 2113.0 RUN NO = 81.000

SECTION (1)LND GR DR PRMTRS DEPENDENT VARIABLE CP

DUMMY 1.0000

TAP	
102.000	.9673
171.000	-.5270
176.000	-.0530
181.000	-.2120
183.000	.1652
186.000	-.1617
192.000	-.5318

OA163B NOSE/MAIN GEAR DOOR PERIMETERS (RFPP10) (27 APR 77)

REFERENCE DATA

SREF = 2690.0000 SQ.FT. XMRP = 1076.7000 IN. XO
LREF = 474.8100 INCHES YMRP = .0000 IN. YO
BREF = 936.6800 INCHES ZMRP = 375.0000 IN. ZO
SCALE = .0405

PARAMETRIC DATA

SPDBRK =	25.000	BDFLAP =	.000
ELV-L =	.000	ELV-R =	.000
PHI-N =	66.000	THETAN =	108.000
PHI-ML =	32.200	THETML =	5.000
PHI-MR =	26.000	THETMR =	4.000

BETA (1) = -5.030 ALPHA (1) = .000 Q(PSF) = 42.882 PO = 2112.3 RUN NO = 83.000

SECTION (1)LND GR DR PRMTRS DEPENDENT VARIABLE CP

DUMMY 1.0000

TAP	
102.000	.9651
171.000	-.5452
176.000	-.1758
181.000	-.4355
183.000	-.0178
186.000	-.2251
192.000	-.4754

BETA (1) = -5.040 ALPHA (2) = 2.080 Q(PSF) = 42.882 PO = 2112.3 RUN NO = 83.000

SECTION (1)LND GR DR PRMTRS DEPENDENT VARIABLE CP

DUMMY 1.0000

TAP	
102.000	.9721
171.000	-.4632
176.000	-.1347
181.000	-.3806
183.000	.0284
186.000	-.1911
192.000	-.4434

BETA (1) = -5.040 ALPHA (3) = 4.160 Q(PSF) = 42.882 PO = 2112.3 RUN NO = 83.000

SECTION (1)LND GR DR PRMTRS DEPENDENT VARIABLE CP

DUMMY 1.0000

TAP	
102.000	.9809
171.000	-.3898
176.000	-.0934
181.000	-.3243
183.000	.0768
186.000	-.1559
192.000	-.4255

OA163B NOSE/MAIN GEAR DOOR PERIMETERS (RFPP10)

BETA (1) = -5.040 ALPHA (4) = 6.210 Q(PSF) = 42.882 PO = 2112.3 RUN NO = 83.000

SECTION (1)LND GR DR PRMTRS DEPENDENT VARIABLE CP

DUMMY 1.0000

TAP	
102.000	.9765
171.000	-.3068
176.000	-.0509
181.000	-.2566
183.000	.1226
186.000	-.1181
192.000	-.4020

BETA (2) = -2.020 ALPHA (1) = .000 Q(PSF) = 42.935 PO = 2112.3 RUN NO = 84.000

SECTION (1)LND GR DR PRMTRS DEPENDENT VARIABLE CP

DUMMY 1.0000

TAP	
102.000	.9826
171.000	-.5778
176.000	-.1914
181.000	-.4232
183.000	.0112
186.000	-.2355
192.000	-.5400

BETA (2) = -2.020 ALPHA (2) = 2.070 Q(PSF) = 42.935 PO = 2112.3 RUN NO = 84.000

SECTION (1)LND GR DR PRMTRS DEPENDENT VARIABLE CP

DUMMY 1.0000

TAP	
102.000	.9841
171.000	-.5011
176.000	-.1521
181.000	-.3597
183.000	.0594
186.000	-.2022
192.000	-.5239

DATE 27 APR 77 OA163B PRESSURE DATA LISTING

OA163B NOSE/MAIN GEAR DOOR PERIMETERS (RFPP10)

BETA (2) = -2.010 ALPHA (3) = 4.120 Q(PSF) = 42.935 PO = 2112.3 RUN NO = 84.000

SECTION (1)LND GR DR PRMTRS DEPENDENT VARIABLE CP

DUMMY 1.0000

TAP	
102.000	.9877
171.000	-.4254
176.000	-.1147
181.000	-.2902
183.000	.1061
186.000	-.1661
192.000	-.4958

BETA (2) = -2.010 ALPHA (4) = 6.200 Q(PSF) = 42.935 PO = 2112.3 RUN NO = 84.000

SECTION (1)LND GR DR PRMTRS DEPENDENT VARIABLE CP

DUMMY 1.0000

TAP	
102.000	.9844
171.000	-.3546
176.000	-.0711
181.000	-.2199
183.000	.1540
186.000	-.1324
192.000	-.4689

BETA (3) = -.990 ALPHA (1) = .000 Q(PSF) = 42.877 PO = 2112.3 RUN NO = 85.000

SECTION (1)LND GR DR PRMTRS DEPENDENT VARIABLE CP

DUMMY 1.0000

TAP	
102.000	.9881
171.000	-.5940
176.000	-.1948
181.000	-.4040
183.000	.0163
186.000	-.2420
192.000	-.5687

OA163B NOSE/MAIN GEAR DOOR PERIMETERS (RFPP10)

BETA (3) = -.990 ALPHA (2) = 2.070 Q(PSF) = 42.877 PO = 2112.3 RUN NO = 85.000

SECTION (1)LND GR DR PRMTRS DEPENDENT VARIABLE CP

DUMMY 1.0000

TAP	
102.000	.9844
171.000	-.5121
176.000	-.1608
181.000	-.3289
183.000	.0646
186.000	-.2061
192.000	-.5404

BETA (3) = -.990 ALPHA (3) = 4.130 Q(PSF) = 42.877 PO = 2112.3 RUN NO = 85.000

SECTION (1)LND GR DR PRMTRS DEPENDENT VARIABLE CP

DUMMY 1.0000

TAP	
102.000	.9951
171.000	-.4470
176.000	-.1246
181.000	-.2717
183.000	.1110
186.000	-.1750
192.000	-.5228

BETA (3) = -1.000 ALPHA (4) = 6.220 Q(PSF) = 42.877 PO = 2112.3 RUN NO = 85.000

SECTION (1)LND GR DR PRMTRS DEPENDENT VARIABLE CP

DUMMY 1.0000

TAP	
102.000	.9866
171.000	-.3862
176.000	-.0762
181.000	-.1970
183.000	.1582
186.000	-.1346
192.000	-.4934

OA163B NOSE/MAIN GEAR DOOR PERIMETERS (RFPF.3)

BETA (4) = -.010 ALPHA (1) = .000 Q(PSF) = 42.892 PO = 2112.3 RUN NO = 86.000

SECTION (1)LND GR DR PRMTRS DEPENDENT VARIABLE CP

DUMMY 1.0000

TAP	
102.000	.9876
171.000	-.6005
176.000	-.2010
181.000	-.3680
183.000	.0143
186.000	-.2412
192.000	-.5943

BETA (4) = -.010 ALPHA (2) = 2.060 Q(PSF) = 42.892 PO = 2112.3 RUN NO = 86.000

SECTION (1)LND GR DR PRMTRS DEPENDENT VARIABLE CP

DUMMY 1.0000

TAP	
102.000	.9882
171.000	-.5344
176.000	-.1618
181.000	-.3058
183.000	.0616
186.000	-.2101
192.000	-.5694

BETA (4) = -.010 ALPHA (3) = 4.120 Q(PSF) = 42.892 PO = 2112.3 RUN NO = 86.000

SECTION (1)LND GR DR PRMTRS DEPENDENT VARIABLE CP

DUMMY 1.0000

TAP	
102.000	.9860
171.000	-.4719
176.000	-.1203
181.000	-.2479
183.000	.1107
186.000	-.1755
192.000	-.5358

OA163B NOSE/MAIN GEAR DOOR PERIMETERS (RFPP10)

BETA (4) = -.010 ALPHA (4) = 6.190 Q(PSF) = 42.892 PO = 2112.3 RUN NO = 86.000

SECTION (1)LND GR DR PRMTRS DEPENDENT VARIABLE CP

DUMMY 1.0000

TAP	
102.000	.9836
171.000	-.4267
176.000	-.0712
181.000	-.1779
183.000	.1603
186.000	-.1387
192.000	-.5033

BETA (5) = .990 ALPHA (1) = .000 Q(PSF) = 42.887 PO = 2112.3 RUN NO = 87.000

SECTION (1)LND GR DR PRMTRS DEPENDENT VARIABLE CP

DUMMY 1.0000

TAP	
102.000	.9866
171.000	-.6147
176.000	-.2050
181.000	-.3510
183.000	.0123
186.000	-.2443
192.000	-.6137

BETA (5) = .990 ALPHA (2) = 2.060 Q(PSF) = 42.887 PO = 2112.3 RUN NO = 87.000

SECTION (1)LND GR DR PRMTRS DEPENDENT VARIABLE CP

DUMMY 1.0000

TAP	
102.000	.9864
171.000	-.5542
176.000	-.1607
181.000	-.2915
183.000	.0606
186.000	-.2140
192.000	-.5871

OA163B NOSE/MAIN GEAR DOOR PERIMETERS (RFPP10)

BETA (5) = .990 ALPHA (3) = 4.120 Q(PSF) = 42.887 PO = 2112.3 RUN NO = 87.000

SECTION (1)LND GR DR PRMTRS DEPENDENT VARIABLE CP

DUMMY 1.0000

TAP	
102.000	.9859
171.000	-.5129
176.000	-.1187
181.000	-.2346
183.000	.1101
186.000	-.1792
192.000	-.5521

BETA (5) = .990 ALPHA (4) = 6.190 Q(PSF) = 42.887 PO = 2112.3 RUN NO = 87.000

SECTION (1)LND GR DR PRMTRS DEPENDENT VARIABLE CP

DUMMY 1.0000

TAP	
102.000	.9783
171.000	-.4716
176.000	-.0740
181.000	-.1774
183.000	.1599
186.000	-.1413
192.000	-.5175

BETA (5) = 1.990 ALPHA (1) = .000 Q(PSF) = 42.840 PO = 2112.3 RUN NO = 88.000

SECTION (1)LND GR DR PRMTRS DEPENDENT VARIABLE CP

DUMMY 1.0000

TAP	
102.000	.9879
171.000	-.6394
176.000	-.2025
181.000	-.3592
183.000	.0092
186.000	-.2497
192.000	-.6267

DATE 27 APR 77 OA163B PRESSURE DATA LISTING (RFPP10)

OA163B NOSE/MAIN GEAR DOOR PERIMETERS

BETA (6) = 1.990 ALPHA (2) = 2.070 Q(PSF) = 42.840 PO = 2112.3 RUN NO = 88.000

SECTION (1)LND GR DR PRMTRS DEPENDENT VARIABLE CP

DUMMY 1.0000

TAP	
102.000	.9864
171.000	-.5895
176.000	-.1583
181.000	-.3007
183.000	.0628
186.000	-.2148
192.000	-.5965

BETA (6) = 1.990 ALPHA (3) = 4.120 Q(PSF) = 42.840 PO = 2112.3 RUN NO = 88.000

SECTION (1)LND GR DR PRMTRS DEPENDENT VARIABLE CP

DUMMY 1.0000

TAP	
102.000	.9862
171.000	-.5514
176.000	-.1127
181.000	-.2468
183.000	.1132
186.000	-.1812
192.000	-.5643

BETA (6) = 1.990 ALPHA (4) = 6.220 Q(PSF) = 42.840 PO = 2112.3 RUN NO = 88.000

SECTION (1)LND GR DR PRMTRS DEPENDENT VARIABLE CP

DUMMY 1.0000

TAP	
102.000	.9812
171.000	-.5133
176.000	-.0762
181.000	-.1951
183.000	.1623
186.000	-.1457
192.000	-.5238

OA163B NOSE/MAIN GEAR DOOR PERIMETERS (RFPP10)

BETA (7) = 5.020 ALPHA (1) = .000 Q(PSF) = 42.755 PO = 2112.3 RUN NO = 89.000

SECTION (1)LND GR DR PRMTRS DEPENDENT VARIABLE CP

DUMMY 1.0000

TAP	
102.000	.9876
171.000	-.7402
176.000	-.1690
181.000	-.4349
183.000	.0123
186.000	-.2626
192.000	-.6504

BETA (7) = 5.020 ALPHA (2) = 2.060 Q(PSF) = 42.755 PO = 2112.3 RUN NO = 89.000

SECTION (1)LND GR DR PRMTRS DEPENDENT VARIABLE CP

DUMMY 1.0000

TAP	
102.000	.9826
171.000	-.6904
176.000	-.1310
181.000	-.3652
183.000	.0648
186.000	-.2309
192.000	-.6181

BETA (7) = 5.020 ALPHA (3) = 4.120 Q(PSF) = 42.755 PO = 2112.3 RUN NO = 89.000

SECTION (1)LND GR DR PRMTRS DEPENDENT VARIABLE CP

DUMMY 1.0000

TAP	
102.000	.9746
171.000	-.6222
176.000	-.0996
181.000	-.2872
183.000	.1172
186.000	-.1964
192.000	-.5802

OA163B NOSE/MAIN GEAR DOOR PERIMETERS (RFPP10)

BETA (7) = 5.020 ALPHA (4) = 6.200 Q(PSF) = 42.755 PO = 2112.3 RUN NO = 89.000

SECTION (1)LND GR DR PRMTRS DEPENDENT VARIABLE CP

DUMMY 1.0000

TAP	
102.000	.9677
171.000	-.5339
176.000	-.0563
181.000	-.2091
183.000	.1671
186.000	-.1616
192.000	-.5468

OA163B NOSE/MAIN GEAR DOOR PERIMETERS (RFPP11) (27 APR 77)

REFERENCE DATA

SREF =	2690.0000 SQ.FT.	XMRP =	1076.7000 IN. XO		
LREF =	474.8100 INCHES	YMRP =	.0000 IN. YO		
BREF =	936.6800 INCHES	ZMRP =	375.0000 IN. ZO		
SCALE =	.0405				

PARAMETRIC DATA

SPDBRK =	25.000	BDFLAP =	.000
ELV-L =	.000	ELV-R =	.000
PHI-N =	66.000	THETAN =	108.000
PHI-ML =	88.000	THETML =	98.000
PHI-MR =	32.200	THETMR =	5.000

BETA (1) = -5.030 ALPHA (1) = .000 Q(PSF) = 42.830 PO = 2113.1 RUN NO = 90.000

SECTION (1)LND GR DR PRMTRS DEPENDENT VARIABLE CP

DUMMY 1.0000

TAP	
102.000	.9667
171.000	-.5401
176.000	-.1725
181.000	-.4336
183.000	-.0168
186.000	-.2257
192.000	-.4744

BETA (1) = -5.030 ALPHA (2) = 2.050 Q(PSF) = 42.830 PO = 2113.1 RUN NO = 90.000

SECTION (1)LND GR DR PRMTRS DEPENDENT VARIABLE CP

DUMMY 1.0000

TAP	
102.000	.9763
171.000	-.4615
176.000	-.1378
181.000	-.3869
183.000	.0274
186.000	-.1953
192.000	-.4473

BETA (1) = -5.030 ALPHA (3) = 4.130 Q(PSF) = 42.830 PO = 2113.1 RUN NO = 90.000

SECTION (1)LND GR DR PRMTRS DEPENDENT VARIABLE CP

DUMMY 1.0000

TAP	
102.000	.9776
171.000	-.3793
176.000	-.0905
181.000	-.3217
183.000	.0769
186.000	-.1582
192.000	-.4129

0A163B NOSE/MAIN GEAR DOOR PERIMETERS (RFPP11)

BETA (1) = -5.030 ALPHA (4) = 6.190 Q(PSF) = 42.830 PO = 2113.1 RUN NO = 90.000

SECTION (1)LND GR DR PRMTRS DEPENDENT VARIABLE CP

DUMMY 1.0000

TAP	
102.000	.9826
171.000	-.3083
176.000	-.0531
181.000	-.2549
183.000	.1243
186.000	-.1197
192.000	-.3968

BETA (2) = -2.010 ALPHA (1) = .000 Q(PSF) = 42.847 PO = 2113.0 RUN NO = 91.000

SECTION (1)LND GR DR PRMTRS DEPENDENT VARIABLE CP

DUMMY 1.0000

TAP	
102.000	.9843
171.000	-.5801
176.000	-.1865
181.000	-.4204
183.000	.0123
186.000	-.2357
192.000	-.5307

BETA (2) = -2.010 ALPHA (2) = 2.060 Q(PSF) = 42.847 PO = 2113.0 RUN NO = 91.000

SECTION (1)LND GR DR PRMTRS DEPENDENT VARIABLE CP

DUMMY 1.0000

TAP	
102.000	.9881
171.000	-.4983
176.000	-.1460
181.000	-.3580
183.000	.0598
186.000	-.2036
192.000	-.5141

OA163B NOSE/MAIN GEAR DOOR PERIMETERS (RFPP11)

BETA (2) = -2.010 ALPHA (3) = 4.100 Q(PSF) = 42.847 PO = 2113.0 RUN NO = 91.000

SECTION (1)LND GR DR PRMTRS DEPENDENT VARIABLE CP

DUMMY 1.0000

TAP	
102.000	.9867
171.000	-.4230
176.000	-.1085
181.000	-.2909
183.000	.1060
186.000	-.1690
192.000	-.4904

BETA (2) = -2.000 ALPHA (4) = 6.170 Q(PSF) = 42.847 PO = 2113.0 RUN NO = 91.000

SECTION (1)LND GR DR PRMTRS DEPENDENT VARIABLE CP

DUMMY 1.0000

TAP	
102.000	.9830
171.000	-.3554
176.000	-.0692
181.000	-.2204
183.000	.1524
186.000	-.1337
192.000	-.4651

BETA (3) = -1.000 ALPHA (1) = -.020 Q(PSF) = 42.940 PO = 2113.0 RUN NO = 92.000

SECTION (1)LND GR DR PRMTRS DEPENDENT VARIABLE CP

DUMMY 1.0000

TAP	
102.000	.9803
171.000	-.5883
176.000	-.1913
181.000	-.3908
183.000	.0162
186.000	-.2401
192.000	-.5618

OA163B NOSE/MAIN GEAR DOOR PERIMETERS (RFPP11)

BETA (3) = -1.010 ALPHA (2) = 2.030 Q(PSF) = 42.940 PO = 2113.0 RUN NO = 92.000

SECTION (1)LND GR DR PRMTRS DEPENDENT VARIABLE CP

DUMMY 1.0000

TAP	
102.000	.9873
171.000	-.5134
176.000	-.1538
181.000	-.3432
183.000	.0647
186.000	-.2072
192.000	-.5443

BETA (3) = -1.010 ALPHA (3) = 4.110 Q(PSF) = 42.940 PO = 2113.0 RUN NO = 92.000

SECTION (1)LND GR DR PRMTRS DEPENDENT VARIABLE CP

DUMMY 1.0000

TAP	
102.000	.9849
171.000	-.4419
176.000	-.1195
181.000	-.2636
183.000	.1100
186.000	-.1729
192.000	-.5106

BETA (3) = -1.010 ALPHA (4) = 6.170 Q(PSF) = 42.940 PO = 2113.0 RUN NO = 92.000

SECTION (1)LND GR DR PRMTRS DEPENDENT VARIABLE CP

DUMMY 1.0000

TAP	
102.000	.9847
171.000	-.3869
176.000	-.0733
181.000	-.1983
183.000	.1605
186.000	-.1378
192.000	-.4871

OA163B NOSE/MAIN GEAR DOOR PERIMETERS (RFPP11)

BETA (4) = .010 ALPHA (1) = -.030 Q(PSF) = 42.855 PO = 2113.0 RUN NO = 93.000

SECTION (1)LND GR DR PRMTRS DEPENDENT VARIABLE CP

DUMMY 1.0000

TAP	
102.000	.9867
171.000	-.5969
176.000	-.1998
181.000	-.3667
183.000	.0133
186.000	-.2440
192.000	-.5902

BETA (4) = .010 ALPHA (2) = 2.030 Q(PSF) = 42.855 PO = 2113.0 RUN NO = 93.000

SECTION (1)LND GR DR PRMTRS DEPENDENT VARIABLE CP

DUMMY 1.0000

TAP	
102.000	.9851
171.000	-.5316
176.000	-.1579
181.000	-.3019
183.000	.0617
186.000	-.2102
192.000	-.5625

BETA (4) = .010 ALPHA (3) = 4.100 Q(PSF) = 42.855 PO = 2113.0 RUN NO = 93.000

SECTION (1)LND GR DR PRMTRS DEPENDENT VARIABLE CP

DUMMY 1.0000

TAP	
102.000	.9857
171.000	-.4689
176.000	-.1195
181.000	-.2423
183.000	.1110
186.000	-.1759
192.000	-.5381

OA163B NOSE/MAIN GEAR DOOR PERIMETERS (RFPP11)

BETA (4) = .010 ALPHA (4) = 6.170 Q(PSF) = 42.855 PO = 2113.0 RUN NO = 93.000

SECTION (1)LND GR DR PRMTRS DEPENDENT VARIABLE CP

DUMMY 1.0000

TAP	
102.000	.9863
171.000	-.4304
176.000	-.0683
181.000	-.1782
183.000	.1586
186.000	-.1399
192.000	-.5005

BETA (5) = 1.010 ALPHA (1) = -.030 Q(PSF) = 42.927 PO = 2113.1 RUN NO = 94.000

SECTION (1)LND GR DR PRMTRS DEPENDENT VARIABLE CP

DUMMY 1.0000

TAP	
102.000	.9855
171.000	-.6119
176.000	-.2000
181.000	-.3493
183.000	.0112
186.000	-.2451
192.000	-.6144

BETA (5) = 1.010 ALPHA (2) = 2.060 Q(PSF) = 42.927 PO = 2113.1 RUN NO = 94.000

SECTION (1)LND GR DR PRMTRS DEPENDENT VARIABLE CP

DUMMY 1.0000

TAP	
102.000	.9859
171.000	-.5519
176.000	-.1616
181.000	-.2884
183.000	.0636
186.000	-.2129
192.000	-.5808

DATE 27 APR 77 0A163B PRESSURE DATA LISTING (RFPP11)

0A163B NOSE/MAIN GEAR DOOR PERIMETERS

BETA (5) = 1.010 ALPHA (3) = 4.100 Q(PSF) = 42.927 PO = 2113.1 RUN NO = 94.000

SECTION (1)LND GR DR PRMTRS DEPENDENT VARIABLE CP

DUMMY 1.0000

TAP	
102.000	.9847
171.000	-.5066
176.000	-.1154
181.000	-.2350
183.000	.1119
186.000	-.1787
192.000	-.5459

BETA (5) = 1.010 ALPHA (4) = 6.190 Q(PSF) = 42.927 PO = 2113.1 RUN NO = 94.000

SECTION (1)LND GR DR PRMTRS DEPENDENT VARIABLE CP

DUMMY 1.0000

TAP	
102.000	.9833
171.000	-.4705
176.000	-.0682
181.000	-.1771
183.000	.1625
186.000	-.1429
192.000	-.5171

BETA (6) = 1.990 ALPHA (1) = .000 Q(PSF) = 42.897 PO = 2113.0 RUN NO = 95.000

SECTION (1)LND GR DR PRMTRS DEPENDENT VARIABLE CP

DUMMY 1.0000

TAP	
102.000	.9884
171.000	-.6406
176.000	-.2027
181.000	-.3567
183.000	.0092
186.000	-.2507
192.000	-.6264

OA163B NOSE/MAIN GEAR DOOR PERIMETERS (RFPP11)

BETA (5) = 1.990 ALPHA (2) = 2.030 Q(PSF) = 42.897 PO = 2113.0 RUN NO = 95.000

SECTION (1)LND GR DR PRMTRS DEPENDENT VARIABLE CP

DUMMY 1.0000

TAP	
102.000	.9862
171.000	-.5910
176.000	-.1568
181.000	-.3009
183.000	.0617
186.000	-.2163
192.000	-.5913

BETA (6) = 2.000 ALPHA (3) = 4.110 Q(PSF) = 42.897 PO = 2113.0 RUN NO = 95.000

SECTION (1)LND GR DR PRMTRS DEPENDENT VARIABLE CP

DUMMY 1.0000

TAP	
102.000	.9852
171.000	-.5504
176.000	-.1096
181.000	-.2448
183.000	.1142
186.000	-.1823
192.000	-.5584

BETA (6) = 2.000 ALPHA (4) = 6.180 Q(PSF) = 42.897 PO = 2113.0 RUN NO = 95.000

SECTION (1)LND GR DR PRMTRS DEPENDENT VARIABLE CP

DUMMY 1.0000

TAP	
102.000	.9824
171.000	-.5079
176.000	-.0642
181.000	-.1913
183.000	.1625
186.000	-.1449
192.000	-.5220

OA163B NOSE/MAIN GEAR DOOR PERIMETERS (RFPP11)

BETA (7) = 5.040 ALPHA (1) = -.020 Q(PSF) = 42.875 PO = 2113.1 RUN NO = 96.000

SECTION (1)LND GR DR PRMTRS DEPENDENT VARIABLE CP

DUMMY 1.0000

TAP	
102.000	.9846
171.000	-.7403
176.000	-.1728
181.000	-.4391
183.000	.0112
186.000	-.2659
192.000	-.6533

BETA (7) = 5.030 ALPHA (2) = 2.050 Q(PSF) = 42.875 PO = 2113.1 RUN NO = 96.000

SECTION (1)LND GR DR PRMTRS DEPENDENT VARIABLE CP

DUMMY 1.0000

TAP	
102.000	.9794
171.000	-.6851
176.000	-.1285
181.000	-.3620
183.000	.0676
186.000	-.2292
192.000	-.6209

BETA (7) = 5.030 ALPHA (3) = 4.100 Q(PSF) = 42.875 PO = 2113.1 RUN NO = 96.000

SECTION (1)LND GR DR PRMTRS DEPENDENT VARIABLE CP

DUMMY 1.0000

TAP	
102.000	.9783
171.000	-.6210
176.000	-.0865
181.000	-.2785
183.000	.1164
186.000	-.1916
192.000	-.5834

OA163B NOSE/MAIN GEAR DOOR PERIMETERS (RFPP11)

BETA (7) = 5.030 ALPHA (4) = 6 190 Q(PSF) = 42.875 PO = 2113.1 RUN NO = 96.000

SECTION (1)LND GR DR PRMTRS DEPENDENT VARIABLE CP

DUMMY 1.0000

TAP	
102.000	.9686
171.000	-.5243
176.000	-.0501
181.000	-.2075
183.000	.1667
186.000	-.1561
192.000	-.5416

OA163B NOSE/MAIN GEAR DOOR PERIMETERS (RFPP12) (27 APR 77)

REFERENCE DATA

SREF = 2690.0000 SQ.FT. XMRP = 1076.7000 IN. XO
LREF = 474.8100 INCHES YMRP = .0000 IN. YO
BREF = 936.6800 INCHES ZMRP = 375.0000 IN. ZO
SCALE = .0405

PARAMETRIC DATA

SPDBRK =	25.000	BDFLAP =	.000
ELV-L =	5.000	ELV-R =	5.000
PHI-N =	30.800	THETAN =	5.000
PHI-ML =	32.200	THETML =	5.000
PHI-MR =	32.200	THETMR =	5.000

ALPHA (1) = 4.180 BETA (1) = -5.050 Q(PSF) = 42.851 PO = 2115.1 RUN NO = 50.000

SECTION (1)LND GR DR PRMTRS DEPENDENT VARIABLE CP

DUMMY 1.0000

TAP	
102.000	.9746
171.000	-.3973
176.000	-.0722
181.000	-.3439
183.000	-.0681
186.000	-.1426
192.000	-.3226

ALPHA (1) = 4.170 BETA (2) = -4.020 Q(PSF) = 42.851 PO = 2115.1 RUN NO = 50.000

SECTION (1)LND GR DR PRMTRS DEPENDENT VARIABLE CP

DUMMY 1.0000

TAP	
102.000	.9781
171.000	-.4027
176.000	-.0734
181.000	-.3472
183.000	-.0613
186.000	-.1391
192.000	-.3190

ALPHA (1) = 4.180 BETA (3) = -2.970 Q(PSF) = 42.851 PO = 2115.1 RUN NO = 50.000

SECTION (1)LND GR DR PRMTRS DEPENDENT VARIABLE CP

DUMMY 1.0000

TAP	
102.000	.9827
171.000	-.4163
176.000	-.0730
181.000	-.3611
183.000	-.0529
186.000	-.1362
192.000	-.3182

OA163B NOSE/MAIN GEAR DOOF PERIMETERS (RFPP12)

ALPHA (1) = 4.170 BETA (4) = -2.040 Q(PSF) = 42.851 PO = 2115.1 RUN NO = 50.000

SECTION (1)LND GR DR PRMTRS DEPENDENT VARIABLE CP

DUMMY 1.0000

TAP	
102.000	.9847
171.000	-.4342
176.000	-.0693
181.000	-.3788
183.000	-.0441
186.000	-.1358
192.000	-.3112

ALPHA (1) = 4.180 BETA (5) = -1.040 Q(PSF) = 42.851 PO = 2115.1 RUN NO = 50.000

SECTION (1)LND GR DR PRMTRS DEPENDENT VARIABLE CP

DUMMY 1.0000

TAP	
102.000	.9832
171.000	-.4366
176.000	-.0631
181.000	-.3953
183.000	-.0349
186.000	-.1346
192.000	-.3095

ALPHA (1) = 4.170 BETA (6) = -.020 Q(PSF) = 42.851 PO = 2115.1 RUN NO = 50.000

SECTION (1)LND GR DR PRMTRS DEPENDENT VARIABLE CP

DUMMY 1.0000

TAP	
102.000	.9843
171.000	-.4371
176.000	-.0632
181.000	-.4018
183.000	-.0329
186.000	-.1368
192.000	-.3134

OA163B NOSE/MAIN GEAR DOOR PERIMETERS (RFPP12)

ALPHA (1) = 4.170 BETA (7) = .970 Q(PSF) = 42.851 PO = 2115.1 RUN NO = 50.000

SECTION (1)LND GR DR PRMTRS DEPENDENT VARIABLE CP

DUMMY 1.0000

TAP	
102.000	.9785
171.000	-.4382
176.000	-.0541
181.000	-.3938
183.000	-.0279
186.000	-.1378
192.000	-.3231

ALPHA (1) = 4.170 BETA (8) = 1.970 Q(PSF) = 42.851 PO = 2115.1 RUN NO = 50.000

SECTION (1)LND GR DR PRMTRS DEPENDENT VARIABLE CP

DUMMY 1.0000

TAP	
102.000	.9768
171.000	-.4445
176.000	-.0510
181.000	-.4012
183.000	-.0238
186.000	-.1396
192.000	-.3334

ALPHA (1) = 4.170 BETA (9) = 2.990 Q(PSF) = 42.851 PO = 2115.1 RUN NO = 50.000

SECTION (1)LND GR DR PRMTRS DEPENDENT VARIABLE CP

DUMMY 1.0000

TAP	
102.000	.9737
171.000	-.4521
176.000	-.0478
181.000	-.4129
183.000	-.0238
186.000	-.1401
192.000	-.3431

OA163B NOSE/MAIN GEAR DOOR PERIMETERS (RFPP12)

ALPHA (1) = 4.170 BETA (10) = 4.050 Q(PSF) = 42.851 PO = 2115.1 RUN NO = 50.000

SECTION (1)LND GR DR PRMTRS DEPENDENT VARIABLE CP

DUMMY 1.0000

TAP	
102.000	.9615
171.000	-.4497
176.000	-.0431
181.000	-.4386
183.000	-.0229
186.000	-.1369
192.000	-.3464

ALPHA (1) = 4.170 BETA (11) = 5.000 Q(PSF) = 42.851 PO = 2115.1 RUN NO = 50.000

SECTION (1)LND GR DR PRMTRS DEPENDENT VARIABLE CP

DUMMY 1.0000

TAP	
102.000	.9620
171.000	-.4510
176.000	-.0391
181.000	-.4851
183.000	-.0269
186.000	-.1340
192.000	-.3610

0A163B NOSE/MAIN GEAR DOOR PERIMETERS (RFPP13) (27 APR 77)

REFERENCE DATA

SREF = 2690.0000 SQ.FT. XMRP = 1076.7000 IN. XO
LREF = 474.8100 INCHES YMRP = .0000 IN. YO
BREF = 936.6800 INCHES ZMRP = 375.0000 IN. ZO
SCALE = .0405

PARAMETRIC DATA

SPDBRK =	25.000	BDFLAP =	.000
ELV-L =	.000	ELV-R =	.000
PHI-N =	66.000	THETAN =	108.000
PHI-ML =	32.200	THETML =	5.000
PHI-MR =	36.000	THETMR =	5.600

ALPHA (1) = 4.120 BETA (1) = -5.030 Q(PSF) = 42.904 PO = 2112.9 RUN NO = 82.000

SECTION (1)LND GR DR PRMTRS DEPENDENT VARIABLE CP

DUMMY 1.0000

TAP	
102.000	.9762
171.000	-.3863
176.000	-.0943
181.000	-.3299
183.000	.0757
186.000	-.1588
192.000	-.4166

ALPHA (1) = 4.120 BETA (2) = -4.040 Q(PSF) = 42.904 PO = 2112.9 RUN NO = 82.000

SECTION (1)LND GR DR PRMTRS DEPENDENT VARIABLE CP

DUMMY 1.0000

TAP	
102.000	.9819
171.000	-.4028
176.000	-.0952
181.000	-.3254
183.000	.0816
186.000	-.1626
192.000	-.4496

ALPHA (1) = 4.120 BETA (3) = -2.950 Q(PSF) = 42.904 PO = 2112.9 RUN NO = 82.000

SECTION (1)LND GR DR PRMTRS DEPENDENT VARIABLE CP

DUMMY 1.0000

TAP	
102.000	.9837
171.000	-.4111
176.000	-.1033
181.000	-.3146
183.000	.0948
186.000	-.1657
192.000	-.4763

OA163B NOSE/MAIN GEAR DOOR PERIMETERS (RFPP13)

ALPHA (1) = 4.120 BETA (4) = -2.010 Q(PSF) = 42.904 PO = 2112.9 RUN NO = 82.000

SECTION (1)LND GR DR PRMTRS DEPENDENT VARIABLE CP

DUMMY 1.0000

TAP	
102.000	.9816
171.000	-.4248
176.000	-.1133
181.000	-.2912
183.000	.1037
186.000	-.1706
192.000	-.4939

ALPHA (1) = 4.120 BETA (5) = -1.020 Q(PSF) = 42.904 PO = 2112.9 RUN NO = 82.000

SECTION (1)LND GR DR PRMTRS DEPENDENT VARIABLE CP

DUMMY 1.0000

TAP	
102.000	.9914
171.000	-.4461
176.000	-.1166
181.000	-.2668
183.000	.1111
186.000	-.1710
192.000	-.5157

ALPHA (1) = 4.120 BETA (6) = .000 Q(PSF) = 42.904 PO = 2112.9 RUN NO = 82.000

SECTION (1)LND GR DR PRMTRS DEPENDENT VARIABLE CP

DUMMY 1.0000

TAP	
102.000	.9855
171.000	-.4735
176.000	-.1199
181.000	-.2401
183.000	.1114
186.000	-.1750
192.000	-.5402

OA163B NOSE/MAIN GEAR DOOR PERIMETERS (RFPP13)

ALPHA (1) = 4.120 BETA (7) = 1.020 Q(PSF) = 42.904 PO = 2112.9 RUN NO = 82.000

SECTION (1)LND GR DR PRMTRS DEPENDENT VARIABLE CP

DUMMY 1.0000

TAP	
102.000	.9892
171.000	-.5138
176.000	-.1136
181.000	-.2356
183.000	.1111
186.000	-.1781
192.000	-.5544

ALPHA (1) = 4.120 BETA (8) = 2.000 Q(PSF) = 42.904 PO = 2112.9 RUN NO = 82.000

SECTION (1)LND GR DR PRMTRS DEPENDENT VARIABLE CP

DUMMY 1.0000

TAP	
102.000	.9836
171.000	-.5523
176.000	-.1116
181.000	-.2437
183.000	.1121
186.000	-.1812
192.000	-.5570

ALPHA (1) = 4.120 BETA (9) = 2.990 Q(PSF) = 42.904 PO = 2112.9 RUN NO = 82.000

SECTION (1)LND GR DR PRMTRS DEPENDENT VARIABLE CP

DUMMY 1.0000

TAP	
102.000	.9825
171.000	-.5905
176.000	-.1082
181.000	-.2690
183.000	.1097
186.000	-.1836
192.000	-.5718

OA163B NOSE/MAIN GEAR DOOR PERIMETERS (RFPP13)

ALPHA (1) = 4.120 BETA (10) = 4.070 Q(PSF) = 42.904 PO = 2112.9 RUN NO = 82.000

SECTION (1)LND GR DR PRMTRS DEPENDENT VARIABLE CP

DUMMY 1.0000

TAP	
102.000	.9806
171.000	-.6156
176.000	-.1044
181.000	-.2835
183.000	.1129
186.000	-.1879
192.000	-.5740

ALPHA (1) = 4.120 BETA (11) = 5.030 Q(PSF) = 42.904 PO = 2112.9 RUN NO = 82.000

SECTION (1)LND GR DR PRMTRS DEPENDENT VARIABLE CP

DUMMY 1.0000

TAP	
102.000	.9791
171.000	-.6258
176.000	-.0972
181.000	-.2871
183.000	.1168
186.000	-.1977
192.000	-.5875

OA163B MAIN GEAR STFUT (RFPW01) (27 APR 77)

REFERENCE DATA

SREF =	2690.0000 SQ.FT.	XMRP =	1076.7000 IN. XO		
LREF =	474.8100 INCHES	YMRP =	.0000 IN. YO		
BREF =	936.6800 INCHES	ZMRP =	375.0000 IN. ZO		
SCALE =	.0405				

PARAMETRIC DATA

SPDBRK =	25.000	BDFLAP =	.000
ELV-L =	.000	ELV-R =	.000
PHI-N =	30.800	THETAN =	5.000
PHI-ML =	32.200	THETML =	5.000
PHI-MR =	32.200	THETMR =	5.000

BETA (1) = -5.040 ALPHA (1) = -2.060 Q(PSF) = 42.911 PO = 2119.2 RUN NO = 1.0000

SECTION (1)MAIN LND GR STRT DEPENDENT VARIABLE CP

DUMMY 1.0000

TAP	
201.000	-.3073
202.000	-.3083
203.000	-.3123
204.000	-.3244
205.000	-.3184
206.000	-.3537
211.000	-.3093
212.000	-.0531
213.000	-.3123
214.000	-.3153
215.000	-.3073
216.000	-.1096
221.000	-.3123
222.000	-.3113
223.000	-.3103
224.000	-.3133
225.000	-.3133
226.000	-.3083

BETA (1) = -4.040 ALPHA (2) = .010 Q(PSF) = 42.911 PO = 2119.2 RUN NO = 1.0000

SECTION (1)MAIN LND GR STRT DEPENDENT VARIABLE CP

DUMMY 1.0000

TAP	
201.000	-.2431
202.000	-.2471
203.000	-.2421
204.000	-.2774
205.000	-.2592
206.000	-.2956
211.000	-.2501
212.000	-.0956
213.000	-.2542
214.000	-.2501
215.000	-.2511

OA163B MAIN GEAR STRUT (RFPH01)

BETA (1) = -4.040 ALPHA (2) = .010

SECTION (1)MAIN LND GR STRT DEPENDENT VARIABLE CP

DUMMY 1.0000

TAP	
216.000	-.1178
221.000	-.2532
222.000	-.2481
223.000	-.2501
224.000	-.2501
225.000	-.2501
226.000	-.2481

BETA (1) = -5.050 ALPHA (3) = 2.070 Q(PSF) = 42.911 PO = 2119.2 RUN NO = 1.0000

SECTION (1)MAIN LND GR STRT DEPENDENT VARIABLE CP

DUMMY 1.0000

TAP	
201.000	-.2167
202.000	-.2027
203.000	-.1946
204.000	-.2248
205.000	-.2137
206.000	-.2479
211.000	-.2057
212.000	-.0489
213.000	-.2057
214.000	-.2017
215.000	-.2047
216.000	-.1062
221.000	-.2077
222.000	-.2007
223.000	-.2057
224.000	-.2067
225.000	-.2077
226.000	-.2037

OA163B MAIN GEAR STRUT (RFPW01)

BETA (1) = -5.060 ALPHA (4) = 6.210 Q(PSF) = 42.911 PO = 2119.2 RUN NO = 1.0000

SECTION (1)MAIN LND GR STRT DEPENDENT VARIABLE CP

DUMMY 1.0000

TAP	
201.000	-.1168
202.000	-.0905
203.000	-.0754
204.000	-.0865
205.000	-.0966
206.000	-.1228
211.000	-.0915
212.000	-.0239
213.000	-.0976
214.000	-.0804
215.000	-.0946
216.000	-.0562
221.000	-.0986
222.000	-.0754
223.000	-.0935
224.000	-.0925
225.000	-.0946
226.000	-.0905

BETA (1) = -5.060 ALPHA (5) = 8.280 Q(PSF) = 42.911 PO = 2119.2 RUN NO = 1.0000

SECTION (1)MAIN LND GR STRT DEPENDENT VARIABLE CP

DUMMY 1.0000

TAP	
201.000	-.0490
202.000	-.0400
203.000	-.0228
204.000	-.0249
205.000	-.0450
206.000	-.0631
211.000	-.0400
212.000	-.0027
213.000	-.0369
214.000	-.0148
215.000	-.0349
216.000	-.0279
221.000	-.0339
222.000	-.0249
223.000	-.0389
224.000	-.0400
225.000	-.0389
226.000	-.0339

OA163B MAIN GEAR STRUT (RFPW01)

BETA (1) = -5.050 ALPHA (6) = 10.330 Q(PSF) = 42.911 PO = 2119.2 RUN NO = 1.0000

SECTION (1)MAIN LND GR STRT DEPENDENT VARIABLE CP

DUMMY 1.0000

TAP	
201.000	.0112
202.000	.0242
203.000	.0312
204.000	.0372
205.000	.0162
206.000	.0062
211.000	.0172
212.000	.0132
213.000	.0232
214.000	.0382
215.000	.0242
216.000	.0002
221.000	.0222
222.000	.0342
223.000	.0212
224.000	.0232
225.000	.0242
226.000	.0262

BETA (2) = -4.040 ALPHA (1) = -2.050 Q(PSF) = 42.777 PO = 2119.2 RUN NO = 2.0000

SECTION (1)MAIN LND GR STRT DEPENDENT VARIABLE CP

DUMMY 1.0000

TAP	
201.000	-.2848
202.000	-.2939
203.000	-.2969
204.000	-.3220
205.000	-.3049
206.000	-.3431
211.000	-.2979
212.000	-.1473
213.000	-.2989
214.000	-.2999
215.000	-.2969
216.000	-.1633
221.000	-.2979
222.000	-.2979
223.000	-.2979
224.000	-.2999
225.000	-.2989
226.000	-.2939

OA163B MAIN GEAR STRUT (RFPWC1)

BETA (2) = -4.040 ALPHA (2) = .010 Q(PSF) = 42.777 PO = 2119.2 RUN NO = 2.0000

SECTION (1)MAIN LND GR STRT DEPENDENT VARIABLE CP

DUMMY 1.0000

TAP	
201.000	-.2378
202.000	-.2438
203.000	-.2398
204.000	-.2741
205.000	-.2539
206.000	-.2892
211.000	-.2458
212.000	-.1500
213.000	-.2499
214.000	-.2458
215.000	-.2499
216.000	-.1682
221.000	-.2478
222.000	-.2448
223.000	-.2458
224.000	-.2468
225.000	-.2478
226.000	-.2428

BETA (2) = -4.040 ALPHA (3) = 2.070 Q(PSF) = 42.777 PO = 2119.2 RUN NO = 2.0000

SECTION (1)MAIN LND GR STRT DEPENDENT VARIABLE CP

DUMMY 1.0000

TAP	
201.000	-.1926
202.000	-.1918
203.000	-.1817
204.000	-.2201
205.000	-.2049
206.000	-.2363
211.000	-.1968
212.000	-.1402
213.000	-.1968
214.000	-.1938
215.000	-.1958
216.000	-.1564
221.000	-.1968
222.000	-.1887
223.000	-.1938
224.000	-.1948
225.000	-.1948
226.000	-.1928

0A163B MAIN GEAR STRUT (RFPW01)

BETA (2) = -4.040 ALPHA (4) = 4.130 Q(PSF) = 42.777 PO = 2119.2 RUN NO = 2.0000

SECTION (1)MAIN LND GR STRT DEPENDENT VARIABLE CP

DUMMY 1.0000

TAP	
201.000	-.1684
202.000	-.1351
203.000	-.1239
204.000	-.1522
205.000	-.1421
206.000	-.1775
211.000	-.1381
212.000	-.1341
213.000	-.1421
214.000	-.1290
215.000	-.1421
216.000	-.1401
221.000	-.1452
222.000	-.1250
223.000	-.1361
224.000	-.1381
225.000	-.1391
226.000	-.1411

BETA (2) = -4.040 ALPHA (5) = 6.180 Q(PSF) = 42.777 PO = 2119.2 RUN NO = 2.0000

SECTION (1)MAIN LND GR STRT DEPENDENT VARIABLE CP

DUMMY 1.0000

TAP	
201.000	-.0986
202.000	-.0885
203.000	-.0643
204.000	-.0764
205.000	-.0925
206.000	-.1147
211.000	-.0895
212.000	-.1127
213.000	-.0865
214.000	-.0643
215.000	-.0844
216.000	-.1137
221.000	-.0885
222.000	-.0653
223.000	-.0875
224.000	-.0875
225.000	-.0865
226.000	-.0844

OA1638 MAIN GEAR STRUT (RFPW01)

BETA (2) = -4.040 ALPHA (6) = 8.270 Q(PSF) = 42.777 PO = 2119.2 RUN NO = 2.0000

SECTION (1)MAIN LND GR STRT DEPENDENT VARIABLE CP

DUMMY 1.0000

TAP	
201.000	-.0371
202.000	-.0260
203.000	-.0128
204.000	-.0108
205.000	-.0330
206.000	-.0472
211.000	-.0290
212.000	-.0846
213.000	-.0249
214.000	-.0068
215.000	-.0229
216.000	-.0795
221.000	-.0239
222.000	-.0148
223.000	-.0260
224.000	-.0260
225.000	-.0260
226.000	-.0209

BETA (3) = -2.960 ALPHA (1) = -2.070 Q(PSF) = 42.885 PO = 2119.2 RUN NO = 3.0000

SECTION (1)MAIN LND GR STRT DEPENDENT VARIABLE CP

DUMMY 1.0000

TAP	
201.000	-.2736
202.000	-.2826
203.000	-.2816
204.000	-.3116
205.000	-.2956
206.000	-.3286
211.000	-.2826
212.000	-.1167
213.000	-.2866
214.000	-.2846
215.000	-.2836
216.000	-.1137
221.000	-.2906
222.000	-.2856
223.000	-.2856
224.000	-.2846
225.000	-.2866
226.000	-.2806

OA163B MAIN GEAR STRUT (RFPW01)

BETA (3) = -2.960 ALPHA (2) = .000 Q(PSF) = 42.885 PO = 2119.2 RUN NO = 3.0000

SECTION (1)MAIN LND GR STRT DEPENDENT VARIABLE CP

DUMMY 1.0000

TAP	
201.000	-.2252
202.000	-.2342
203.000	-.2292
204.000	-.2624
205.000	-.2473
206.000	-.2775
211.000	-.2353
212.000	-.1457
213.000	-.2373
214.000	-.2373
215.000	-.2383
216.000	-.1487
221.000	-.2403
222.000	-.2322
223.000	-.2342
224.000	-.2353
225.000	-.2342
226.000	-.2322

BETA (3) = -2.960 ALPHA (3) = 2.050 Q(PSF) = 42.885 PO = 2119.2 RUN NO = 3.0000

SECTION (1)MAIN LND GR STRT DEPENDENT VARIABLE CP

DUMMY 1.0000

TAP	
201.000	-.1857
202.000	-.1816
203.000	-.1695
204.000	-.2119
205.000	-.1927
206.000	-.2251
211.000	-.1846
212.000	-.1382
213.000	-.1887
214.000	-.1816
215.000	-.1846
216.000	-.1422
221.000	-.1897
222.000	-.1745
223.000	-.1826
224.000	-.1846
225.000	-.1826
226.000	-.1836

OA163B MAIN GEAR STRUT (RFPW01)

BETA (3) = -2.960 ALPHA (4) = 4.130 Q(PSF) = 42.885 PO = 2119.2 RUN NO = 3.0000

SECTION (1)MAIN LND GR STRT DEPENDENT VARIABLE CP

DUMMY 1.0000

TAP	
201.000	-.1530
202.000	-.1237
203.000	-.1106
204.000	-.1247
205.000	-.1338
206.000	-.1580
211.000	-.1227
212.000	-.1288
213.000	-.1298
214.000	-.1187
215.000	-.1328
216.000	-.1288
221.000	-.1278
222.000	-.1096
223.000	-.1247
224.000	-.1237
225.000	-.1278
226.000	-.1237

BETA (3) = -2.960 ALPHA (5) = 6.190 Q(PSF) = 42.885 PO = 2119.2 RUN NO = 3.0000

SECTION (1)MAIN LND GR STRT DEPENDENT VARIABLE CP

DUMMY 1.0000

TAP	
201.000	-.0895
202.000	-.0764
203.000	-.0552
204.000	-.0643
205.000	-.0794
206.000	-.1006
211.000	-.0774
212.000	-.1097
213.000	-.0764
214.000	-.0512
215.000	-.0744
216.000	-.1047
221.000	-.0744
222.000	-.0603
223.000	-.0784
224.000	-.0815
225.000	-.0825
226.000	-.0754

OA163B MAIN GEAR STRUT (RFPW01)

BETA (3) = -2.960 ALPHA (6) = 8.270 Q(PSF) = 42.885 PO = 2119.2 RUN NO = 3.0000

SECTION (1)MAIN LND GR STRT DEPENDENT VARIABLE CP

DUMMY 1.0000

TAP	
201.000	-.0288
202.000	-.0157
203.000	-.0057
204.000	.0002
205.000	-.0197
206.000	-.0368
211.000	-.0208
212.000	-.0769
213.000	-.0157
214.000	.0022
215.000	-.0117
216.000	-.0649
221.000	-.0127
222.000	-.0007
223.000	-.0157
224.000	-.0147
225.000	-.0127
226.000	-.0107

BETA (4) = -2.010 ALPHA (1) = -2.080 Q(PSF) = 42.825 PO = 2114.9 RUN NO = 4.0000

SECTION (1)MAIN LND GR STRT DEPENDENT VARIABLE CP

DUMMY 1.0000

TAP	
201.000	-.2662
202.000	-.2712
203.000	-.2682
204.000	-.3044
205.000	-.2843
206.000	-.3165
211.000	-.2742
212.000	-.0771
213.000	-.2732
214.000	-.2752
215.000	-.2672
216.000	-.0580
221.000	-.2652
222.000	-.2571
223.000	-.2541
224.000	-.2541
225.000	-.2602
226.000	-.2622

OA163B MAIN GEAR STRUT (RFPN01)

BETA (4) = -2.010 ALPHA (2) = -.010 Q(PSF) = 42.825 PO = 2114.9 RUN NO = 4.0000

SECTION (1)MAIN LND GR STRT DEPENDENT VARIABLE CP

DUMMY 1.0000

TAP	
201.000	-.2120
202.000	-.2220
203.000	-.2120
204.000	-.2542
205.000	-.2331
206.000	-.2603
211.000	-.2200
212.000	-.0872
213.000	-.2251
214.000	-.2210
215.000	-.2291
216.000	-.0902
221.000	-.2271
222.000	-.2170
223.000	-.2200
224.000	-.2210
225.000	-.2230
226.000	-.2230

BETA (4) = -2.010 ALPHA (3) = 2.050 Q(PSF) = 42.825 PO = 2114.9 RUN NO = 4.0000

SECTION (1)MAIN LND GR STRT DEPENDENT VARIABLE CP

DUMMY 1.0000

TAP	
201.000	-.1831
202.000	-.1680
203.000	-.1529
204.000	-.1932
205.000	-.1771
206.000	-.2073
211.000	-.1660
212.000	-.1025
213.000	-.1730
214.000	-.1640
215.000	-.1710
216.000	-.1105
221.000	-.1730
222.000	-.1559
223.000	-.1660
224.000	-.1680
225.000	-.1690
226.000	-.1680

OA163B MAIN GEAR STRUT (RFPW01)

BETA (4) = -2.020 ALPHA (4) = 4.140 Q(PSF) = 42.825 PO = 2114.9 RUN NO = 4.0000

SECTION (1)MAIN LND GR STRT DEPENDENT VARIABLE CP

DUMMY 1.0000

TAP	
201.000	-.1330
202.000	-.1189
203.000	-.0946
204.000	-.1088
205.000	-.1239
206.000	-.1461
211.000	-.1189
212.000	-.0886
213.000	-.1178
214.000	-.1017
215.000	-.1219
216.000	-.0966
221.000	-.1229
222.000	-.0946
223.000	-.1158
224.000	-.1128
225.000	-.1168
226.000	-.1138

BETA (4) = -2.020 ALPHA (5) = 5.220 Q(PSF) = 42.825 PO = 2114.9 RUN NO = 4.0000

SECTION (1)MAIN LND GR STRT DEPENDENT VARIABLE CP

DUMMY 1.0000

TAP	
201.000	-.0725
202.000	-.0563
203.000	-.0462
204.000	-.0472
205.000	-.0684
206.000	-.0876
211.000	-.0684
212.000	-.0725
213.000	-.0634
214.000	-.0401
215.000	-.0593
216.000	-.0795
221.000	-.0573
222.000	-.0482
223.000	-.0644
224.000	-.0664
225.000	-.0654
226.000	-.0593

OA163B MAIN GEAR STRUT (RFPW01)

BETA (4) = -2.020 ALPHA (6) = 8.280 Q(PSF) = 42.825 PO = 2114.9 RUN NO = 4.0000

SECTION (1)MAIN LND GR STRT DEPENDENT VARIABLE CP

DUMMY 1.0000

TAP	
201.000	-.0188
202.000	-.0037
203.000	.0083
204.000	.0163
205.000	-.0128
206.000	-.0228
211.000	-.0098
212.000	-.0521
213.000	-.0037
214.000	.0153
215.000	-.0027
216.000	-.0531
221.000	-.0057
222.000	.0083
223.000	-.0027
224.000	-.0027
225.000	-.0027
226.000	-.0007

BETA (5) = -1.020 ALPHA (1) = -2.080 Q(PSF) = 42.920 PO = 2115.0 RUN NO = 5.0000

SECTION (1)MAIN LND GR STRT DEPENDENT VARIABLE CP

DUMMY 1.0000

TAP	
201.000	-.2562
202.000	-.2632
203.000	-.2552
204.000	-.2963
205.000	-.2772
206.000	-.3063
211.000	-.2642
212.000	-.0608
213.000	-.2672
214.000	-.2622
215.000	-.2642
216.000	-.0658
221.000	-.2652
222.000	-.2572
223.000	-.2602
224.000	-.2622
225.000	-.2622
226.000	-.2582

OA163B MAIN GEAR STRUT (RFPH01)

BETA (5) = -1.020 ALPHA (2) = .010 Q(PSF) = 42.920 PO = 2115.0 RUN NO = 5.0000

SECTION (1)MAIN LND GR STRT DEPENDENT VARIABLE CP

DUMMY 1.0000

TAP	
201.000	-.1972
202.000	-.2053
203.000	-.1932
204.000	-.2355
205.000	-.2204
206.000	-.2476
211.000	-.2083
212.000	-.1126
213.000	-.2124
214.000	-.2053
215.000	-.2144
216.000	-.1216
221.000	-.2134
222.000	-.2013
223.000	-.2093
224.000	-.2083
225.000	-.2093
226.000	-.2093

BETA (5) = -1.020 ALPHA (3) = 2.070 Q(PSF) = 42.920 PO = 2115.0 RUN NO = 5.0000

SECTION (1)MAIN LND GR STRT DEPENDENT VARIABLE CP

DUMMY 1.0000

TAP	
201.000	-.1731
202.000	-.1540
203.000	-.1398
204.000	-.1671
205.000	-.1681
206.000	-.1903
211.000	-.1509
212.000	-.1066
213.000	-.1630
214.000	-.1550
215.000	-.1630
216.000	-.1197
221.000	-.1610
222.000	-.1408
223.000	-.1540
224.000	-.1540
225.000	-.1540
226.000	-.1519

OA163B MAIN GEAR STRUT (RFPW01)

BETA (5) = -1.020 ALPHA (4) = 4.130 Q(PSF) = 42.92) PO = 2115.0 RUN NO = 5.0000

SECTION (1)MAIN LND GR STRT DEPENDENT VARIABLE CP

DUMMY 1.0000

TAP	
201.000	-.1202
202.000	-.1112
203.000	-.0841
204.000	-.0981
205.000	-.1172
206.000	-.1363
211.000	-.1122
212.000	-.0881
213.000	-.1102
214.000	-.0820
215.000	-.1142
216.000	-.1011
221.000	-.1122
222.000	-.0851
223.000	-.1122
224.000	-.1102
225.000	-.1132
226.000	-.1082

BETA (5) = -1.030 ALPHA (5) = 6.180 Q(PSF) = 42.920 PO = 2115.0 RUN NO = 5.0000

SECTION (1)MAIN LND GR STRT DEPENDENT VARIABLE CP

DUMMY 1.0000

TAP	
201.000	-.0632
202.000	-.0440
203.000	-.0380
204.000	-.0350
205.000	-.0571
206.000	-.0722
211.000	-.0581
212.000	-.0672
213.000	-.0521
214.000	-.0299
215.000	-.0491
216.000	-.0732
221.000	-.0470
222.000	-.0390
223.000	-.0571
224.000	-.0551
225.000	-.0521
226.000	-.0491

DATE 27 APR 77 OA163B PRESSURE DATA LISTING

OA163B MAIN GEAR STRUT (RFPW01)

BETA (5) = -1.030 ALPHA (6) = 8.260 Q(PSF) = 42.920 PO = 2115.0 RUN NO = 5.0000

SECTION (1)MAIN LND GR STRT DEPENDENT VARIABLE CP

DUMMY 1.0000

TAP	
201.000	-.0117
202.000	.0032
203.000	.0153
204.000	.0323
205.000	-.0017
206.000	-.0107
211.000	-.0007
212.000	-.0438
213.000	.0052
214.000	.0223
215.000	.0052
216.000	-.0418
221.000	.0022
222.000	.0132
223.000	.0072
224.000	.0082
225.000	.0092
226.000	.0072

BETA (6) = .000 ALPHA (1) = -2.050 Q(PSF) = 43.418 PO = 2113.6 RUN NO = 6.0000

SECTION (1)MAIN LND GR STRT DEPENDENT VARIABLE CP

DUMMY 1.0000

TAP	
201.000	-.2344
202.000	-.2444
203.000	-.2304
204.000	-.2803
205.000	-.2594
206.000	-.2853
211.000	-.2484
212.000	-.0656
213.000	-.2484
214.000	-.2424
215.000	-.2514
216.000	-.0726
221.000	-.2504
222.000	-.2364
223.000	-.2414
224.000	-.2424
225.000	-.2424
226.000	-.2394

0A163B MAIN GEAR STRUT (RFPH01)

BETA (6) = .000 ALPHA (2) = .000 Q(PSF) = 43.418 PO = 2113.6 RUN NO = 6.0000

SECTION (1)MAIN LND GR STRT DEPENDENT VARIABLE CP

DUMMY 1.0000

TAP	
201.000	-.1941
202.000	-.1941
203.000	-.1792
204.000	-.2211
205.000	-.2081
206.000	-.2320
211.000	-.1931
212.000	-.0775
213.000	-.2031
214.000	-.1941
215.000	-.2001
216.000	-.0934
221.000	-.1991
222.000	-.1852
223.000	-.1911
224.000	-.1931
225.000	-.1931
226.000	-.1911

BETA (6) = .000 ALPHA (3) = 2.060 Q(PSF) = 43.418 PO = 2113.6 RUN NO = 6.0000

SECTION (1)MAIN LND GR STRT DEPENDENT VARIABLE CP

DUMMY 1.0000

TAP	
201.000	-.1640
202.000	-.1411
203.000	-.1251
204.000	-.1431
205.000	-.1540
206.000	-.1749
211.000	-.1440
212.000	-.0883
213.000	-.1480
214.000	-.1381
215.000	-.1540
216.000	-.1072
221.000	-.1500
222.000	-.1231
223.000	-.1411
224.000	-.1421
225.000	-.1411
226.000	-.1381

OA163B MAIN GEAR STRUT (RFPW01)

BETA (6) = .000 ALPHA (4) = 4.110 Q(PSF) = 43.418 PO = 2113.6 RUN NO = 6.0000

SECTION (1)MAIN LND GR STRT DEPENDENT VARIABLE CP

DUMMY 1.0000

TAP	
201.000	-.1039
202.000	-.0960
203.000	-.0741
204.000	-.0821
205.000	-.1029
206.000	-.1208
211.000	-.0999
212.000	-.0662
213.000	-.0980
214.000	-.0682
215.000	-.0970
216.000	-.0890
221.000	-.0910
222.000	-.0731
223.000	-.0980
224.000	-.0970
225.000	-.0999
226.000	-.0930

BETA (6) = .000 ALPHA (5) = 6.200 Q(PSF) = 43.418 PO = 2113.6 RUN NO = 6.0000

SECTION (1)MAIN LND GR STRT DEPENDENT VARIABLE CP

DUMMY 1.0000

TAP	
201.000	-.0542
202.000	-.0393
203.000	-.0245
204.000	-.0225
205.000	-.0492
206.000	-.0591
211.000	-.0463
212.000	-.0571
213.000	-.0373
214.000	-.0165
215.000	-.0383
216.000	-.0651
221.000	-.0363
222.000	-.0245
223.000	-.0383
224.000	-.0403
225.000	-.0383
226.000	-.0344

OA163B MAIN GEAR STRUT (RFPW01)

BETA (6) = .000 ALPHA (6) = 8.280 Q(PSF) = 43.418 PO = 2113.6 RUN NO = 6.0000

SECTION (1)MAIN LND GR STRT DEPENDENT VARIABLE CP

DUMMY 1.0000

TAP	
201.000	.0022
202.000	.0160
203.000	.0259
204.000	.0546
205.000	.0101
206.000	.0091
211.000	.0121
212.000	-.0353
213.000	.0160
214.000	.0348
215.000	.0131
216.000	-.0393
221.000	.0180
222.000	.0160
223.000	.0200
224.000	.0210
225.000	.0190
226.000	.0200

BETA (7) = 1.000 ALPHA (1) = -2.060 Q(PSF) = 43.823 PO = 2113.6 RUN NO = 7.0000

SECTION (1)MAIN LND GR STRT DEPENDENT VARIABLE CP

DUMMY 1.0000

TAP	
201.000	-.2170
202.000	-.2268
203.000	-.2150
204.000	-.2594
205.000	-.2426
206.000	-.2683
211.000	-.2328
212.000	-.0807
213.000	-.2338
214.000	-.2318
215.000	-.2347
216.000	-.0906
221.000	-.2338
222.000	-.2189
223.000	-.2259
224.000	-.2268
225.000	-.2268
226.000	-.2239

OA163B MAIN GEAR STRUT (RFPW01)

BETA (7) = 1.000 ALPHA (2) = .000 Q(PSF) = 43.823 PO = 2113.6 RUN NO = 7.0000

SECTION (1)MAIN LND GR STRT DEPENDENT VARIABLE CP

DUMMY 1.0000

TAP	
201.000	-.1861
202.000	-.1763
203.000	-.1625
204.000	-.1940
205.000	-.1940
206.000	-.2118
211.000	-.1772
212.000	-.1003
213.000	-.1861
214.000	-.1782
215.000	-.1881
216.000	-.1190
221.000	-.1832
222.000	-.1615
223.000	-.1723
224.000	-.1684
225.000	-.1654
226.000	-.1625

BETA (7) = 1.000 ALPHA (3) = 2.060 Q(PSF) = 43.823 PO = 2113.6 RUN NO = 7.0J00

SECTION (1)MAIN LND GR STRT DEPENDENT VARIABLE CP

DUMMY 1.0000

TAP	
201.000	-.1455
202.000	-.1297
203.000	-.1091
204.000	-.1228
205.000	-.1406
206.000	-.1623
211.000	-.1317
212.000	-.1061
213.000	-.1366
214.000	-.1140
215.000	-.1406
216.000	-.1248
221.000	-.1366
222.000	-.1071
223.000	-.1317
224.000	-.1288
225.000	-.1288
226.000	-.1278

0A163B MAIN GEAR STRUT (RFPW01)

BETA (7) = 1.000 ALPHA (4) = 4.110 Q(PSF) = 43.823 PO = 2113.6 RUN NO = 7.0000

SECTION (1)MAIN LND GR STRT DEPENDENT VARIABLE CP

DUMMY 1.0000

TAP	
201.000	-.0932
202.000	-.0824
203.000	-.0637
204.000	-.0656
205.000	-.0883
206.000	-.1050
211.000	-.0853
212.000	-.0883
213.000	-.0843
214.000	-.0499
215.000	-.0715
216.000	-.1089
221.000	-.0676
222.000	-.0558
223.000	-.0814
224.000	-.0794
225.000	-.0873
226.000	-.0893

BETA (7) = 1.000 ALPHA (5) = 6.190 Q(PSF) = 43.823 PO = 2113.6 RUN NO = 7.0000

SECTION (1)MAIN LND GR STRT DEPENDENT VARIABLE CP

DUMMY 1.0000

TAP	
201.000	-.0439
202.000	-.0312
203.000	-.0144
204.000	.0002
205.000	-.0351
206.000	-.0439
211.000	-.0292
212.000	-.0675
213.000	-.0243
214.000	-.0066
215.000	-.0272
216.000	-.0764
221.000	-.0233
222.000	-.0194
223.000	-.0253
224.000	-.0223
225.000	-.0213
226.000	-.0203

OA163B MAIN GEAR STRUT (RFPW01)

BETA (7) = 1.000 ALPHA (6) = 8.260 Q(PSF) = 43.823 PO = 2113.6 RUN NO = 7.0000

SECTION (1)MAIN LND GR STRT DEPENDENT VARIABLE C_P

DUMMY 1.0000

TAP	
201.000	.0120
202.000	.0257
203.000	.0375
204.000	.0749
205.000	.0198
206.000	.0238
211.000	.0218
212.000	-.0321
213.000	.0257
214.000	.0405
215.000	.0189
216.000	-.0321
221.000	.0287
222.000	.0238
223.000	.0307
224.000	.0307
225.000	.0307
226.000	.0316

BETA (8) = 1.980 ALPHA (1) = -2.070 Q(PSF) = 43.017 PO = 2113.6 RUN NO = 8.0000

SECTION (1)MAIN LND GR STRT DEPENDENT VARIABLE C_P

DUMMY 1.0000

TAP	
201.000	-.2057
202.000	-.2115
203.000	-.1978
204.000	-.2380
205.000	-.2302
206.000	-.2498
211.000	-.2155
212.000	-.0611
213.000	-.2194
214.000	-.2125
215.000	-.2194
216.000	-.0880
221.000	-.2184
222.000	-.2027
223.000	-.2096
224.000	-.2096
225.000	-.2096
226.000	-.2086

OA163B MAIN GEAR STRUT (RFPW01)

BETA (8) = 1.980 ALPHA (2) = -.010 Q(PSF) = 43.017 PO = 2113.6 RUN NO = 8.0000

SECTION (1)MAIN LND GR STRT DEPENDENT VARIABLE CP

DUMMY 1.0000

TAP	
201.000	-.1795
202.000	-.1673
203.000	-.1492
204.000	-.1734
205.000	-.1865
206.000	-.2027
211.000	-.1714
212.000	-.0997
213.000	-.1754
214.000	-.1653
215.000	-.1835
216.000	-.1199
221.000	-.1764
222.000	-.1492
223.000	-.1653
224.000	-.1663
225.000	-.1663
226.000	-.1663

BETA (8) = 1.980 ALPHA (3) = 2.060 Q(PSF) = 43.017 PO = 2113.6 RUN NO = 8.0000

SECTION (1)MAIN LND GR STRT DEPENDENT VARIABLE CP

DUMMY 1.0000

TAP	
201.000	-.1315
202.000	-.1265
203.000	-.0983
204.000	-.1124
205.000	-.1345
206.000	-.1506
211.000	-.1285
212.000	-.0852
213.000	-.1295
214.000	-.0923
215.000	-.1335
216.000	-.1104
221.000	-.1224
222.000	-.0983
223.000	-.1295
224.000	-.1255
225.000	-.1295
226.000	-.1235

OA163B MAIN GEAR STRUT (RFPW01)

BETA (8) = 1.980 ALPHA (4) = 4.120 Q(PSF) = 43.0 7 PO = 2113.6 RUN NO = 8.0000

SECTION (1)MAIN LND GR STRT DEPENDENT VAR.ABLE CP

DUMMY 1.0000

TAP	
201.000	-.0853
202.000	-.0712
203.000	-.0541
204.000	-.0480
205.000	-.0762
206.000	-.0943
211.000	-.0752
212.000	-.0651
213.000	-.0702
214.000	-.0460
215.000	-.0672
216.000	-.0903
221.000	-.0672
222.000	-.0521
223.000	-.0732
224.000	-.0732
225.000	-.0742
226.000	-.0682

BETA (8) = 1.980 ALPHA (5) = 6.180 Q(PSF) = 43.0:7 PO = 2113.6 RUN NO = 8.0000

SECTION (1)MAIN LND GR STRT DEPENDENT VARIABLE CP

DUMMY 1.0000

TAP	
201.000	-.0310
202.000	-.0189
203.000	-.0017
204.000	.0194
205.000	-.0259
206.000	-.0249
211.000	-.0209
212.000	-.0451
213.000	-.0128
214.000	.0032
215.000	-.0179
216.000	-.0623
221.000	-.0138
222.000	-.0138
223.000	-.0138
224.000	-.0118
225.000	-.0108
226.000	-.0098

OA163B MAIN GEAR STRUT (RFPW01)

BETA (8) = 1.980 ALPHA (6) = 8.280 Q(PSF) = 43.017 PO = 2113.6 RUN NO = 8.0000

SECTION (1)MAIN LND GR STRT DEPENDENT VARIABLE CP

DUMMY 1.0000

TAP	
201.000	.0244
202.000	.0425
203.000	.0495
204.000	.0988
205.000	.0334
206.000	.0364
211.000	.0344
212.000	-.0168
213.000	.0354
214.000	.0535
215.000	.0274
216.000	-.0259
221.000	.0395
222.000	.0324
223.000	.0445
224.000	.0445
225.000	.0435
226.000	.0385

BETA (9) = 2.990 ALPHA (1) = -2.060 Q(PSF) = 42.788 PO = 2113.6 RUN NO = 9.0000

SECTION (1)MAIN LND GR STRT DEPENDENT VARIABLE CP

DUMMY 1.0000

TAP	
201.000	-.2111
202.000	-.2000
203.000	-.1859
204.000	-.2202
205.000	-.2212
206.000	-.2433
211.000	-.2061
212.000	-.0722
213.000	-.2131
214.000	-.2051
215.000	-.2141
216.000	-.0853
221.000	-.2091
222.000	-.1890
223.000	-.1980
224.000	-.1980
225.000	-.2000
226.000	-.1990

0A1638 MAIN GEAR STRUT (RFPH01)

BETA (9) = 2.990 ALPHA (2) = .000 Q(PSF) = 42.768 PO = 2113.6 RUN NO = 9.0000

SECTION (1)MAIN LND GR STRT DEPENDENT VARIABLE CP

DUMMY 1.0000

TAP	
201.000	-.1679
202.000	-.1548
203.000	-.1347
204.000	-.1483
205.000	-.1710
206.000	-.1891
211.000	-.1589
212.000	-.0853
213.000	-.1599
214.000	-.1427
215.000	-.1699
216.000	-.1105
221.000	-.1629
222.000	-.1337
223.000	-.1538
224.000	-.1528
225.000	-.1538
226.000	-.1518

BETA (9) = 2.990 ALPHA (3) = 2.080 Q(PSF) = 42.783 PO = 2113.6 RUN NO = 9.0000

SECTION (1)MAIN LND GR STRT DEPENDENT VARIABLE CP

DUMMY 1.0000

TAP	
201.000	-.1208
202.000	-.1117
203.000	-.0855
204.000	-.0895
205.000	-.1148
206.000	-.1309
211.000	-.1117
212.000	-.0764
213.000	-.1158
214.000	-.0804
215.000	-.1148
216.000	-.1037
221.000	-.1037
222.000	-.0975
223.000	-.1168
224.000	-.1127
225.000	-.1168
226.000	-.1117

OA163B MAIN GEAR STRUT (RFPW01)

BETA (9) = 2.990 ALPHA (4) = 4.120 Q(PSF) = 42.783 PO = 2113.6 RUN NO = 9.0000

SECTION (1)MAIN LND GR STRT DEPENDENT VARIABLE CP

DUMMY 1.0000

TAP	
201.000	-.0713
202.000	-.0592
203.000	-.0330
204.000	-.0209
205.000	-.0372
206.000	-.0733
211.000	-.0622
212.000	-.0532
213.000	-.0541
214.000	-.0340
215.000	-.0572
216.000	-.0804
221.000	-.0531
222.000	-.0420
223.000	-.0662
224.000	-.0531
225.000	-.0531
226.000	-.0541

BETA (9) = 2.990 ALPHA (5) = 6.200 Q(PSF) = 42.781 PO = 2113.6 RUN NO = 9.0000

SECTION (1)MAIN LND GR STRT DEPENDENT VARIABLE CP

DUMMY 1.0000

TAP	
201.000	-.0199
202.000	-.0007
203.000	.0103
204.000	.0463
205.000	-.0108
206.000	-.0068
211.000	-.0058
212.000	-.0411
213.000	-.0027
214.000	.0134
215.000	-.0083
216.000	-.0573
221.000	-.0027
222.000	-.0047
223.000	.0043
224.000	.0063
225.000	.0032
226.000	.0012

OA163B MAIN GEAR STRUT (RFPW01)

BETA (9) = 2.980 ALPHA (6) = 8.260 Q(PSF) = 42.788 PO = 2113.6 RUN NO = 9.0000

SECTION (1)MAIN LND GR STRT DEPENDENT VARIABLE CP

DUMMY 1.0000

TAP	
201.000	.0305
202.000	.0618
203.000	.0537
204.000	.1233
205.000	.0396
206.000	.0436
211.000	.0406
212.000	-.0128
213.000	.0436
214.000	.0597
215.000	.0325
216.000	-.0239
221.000	.0497
222.000	.0386
223.000	.0537
224.000	.0527
225.000	.0497
226.000	.0486

BETA (10) = 4.050 ALPHA (1) = -2.060 Q(PSF) = 42.907 PO = 2113.7 RUN NO = 10.000

SECTION (1)MAIN LND GR STRT DEPENDENT VARIABLE CP

DUMMY 1.0000

TAP	
201.000	-.1972
202.000	-.1872
203.000	-.1671
204.000	-.1872
205.000	-.2052
206.000	-.2243
211.000	-.1912
212.000	-.0538
213.000	-.1952
214.000	-.1842
215.000	-.2002
216.000	-.0749
221.000	-.1932
222.000	-.1701
223.000	-.1812
224.000	-.1822
225.000	-.1832
226.000	-.1842

OA163B MAIN GEAR STRUT (RFPH01)

BETA (10) = 4.040 ALPHA (2) = .000 Q(PSF) = 42.907 PO = 2113.7 RUN NO = 10.000

SECTION (1)MAIN LND GR STRT DEPENDENT VARIABLE CP

DUMMY 1.0000

TAP	
201.000	-.1525
202.000	-.1465
203.000	-.1204
204.000	-.1354
205.000	-.1586
206.000	-.1726
211.000	-.1495
212.000	-.0751
213.000	-.1545
214.000	-.1204
215.000	-.1576
216.000	-.1033
221.000	-.1465
222.000	-.1193
223.000	-.1495
224.000	-.1446
225.000	-.1475
226.000	-.1415

BETA (10) = 4.040 ALPHA (3) = 2.050 Q(PSF) = 42.907 PO = 2113.7 RUN NO = 10.000

SECTION (1)MAIN LND GR STRT DEPENDENT VARIABLE CP

DUMMY 1.0000

TAP	
201.000	-.1083
202.000	-.0983
203.000	-.0741
204.000	-.0781
205.000	-.1033
206.000	-.1194
211.000	-.1023
212.000	-.0661
213.000	-.1003
214.000	-.0701
215.000	-.0952
216.000	-.0962
221.000	-.0962
222.000	-.0761
223.000	-.1003
224.000	-.1003
225.000	-.1013
226.000	-.0952

OA163B MAIN GEAR STRUT (RFPW01)

BETA (10) = 4.050 ALPHA (4) = 4.110 Q(PSF) = 42.907 PO = 2113.7 RUN NO = 10.000

SECTION (1)MAIN LND GR STRT DEPENDENT VARIABLE CP

DUMMY 1.0000

TAP	
201.000	-.0601
202.000	-.0450
203.000	-.0269
204.000	-.0017
205.000	-.0540
206.000	-.0470
211.000	-.0480
212.000	-.0581
213.000	-.0410
214.000	-.0238
215.000	-.0500
216.000	-.0732
221.000	-.0420
222.000	-.0410
223.000	-.0379
224.000	-.0369
225.000	-.0369
226.000	-.0399

BETA (10) = 4.050 ALPHA (5) = 6.210 Q(PSF) = 42.907 PO = 2113.7 RUN NO = 10.000

SECTION (1)MAIN LND GR STRT DEPENDENT VARIABLE CP

DUMMY 1.0000

TAP	
201.000	-.0068
202.000	.0194
203.000	.0214
204.000	.0779
205.000	.0042
206.000	.0103
211.000	.0032
212.000	-.0380
213.000	.0063
214.000	.0234
215.000	-.0017
216.000	-.0512
221.000	.0093
222.000	.0022
223.000	.0174
224.000	.0164
225.000	.0133
226.000	.0123

0A163B MAIN GEAR STRUT (RFPW01)

BETA (10) = 4.050 ALPHA (6) = 8.280 Q(PSF) = 42.907 PO = 2113.7 RUN NO = 10.000

SECTION (1)MAIN LND GR STRT DEPENDENT VARIABLE CP

DUMMY 1.0000

TAP	
201.000	.0374
202.000	.0726
203.000	.0615
204.000	.1390
205.000	.0515
206.000	.0505
211.000	.0515
212.000	-.0118
213.000	.0525
214.000	.0676
215.000	.0414
216.000	-.0208
221.000	.0565
222.000	.0455
223.000	.0575
224.000	.0595
225.000	.0575
226.000	.0575

BETA (11) = 5.010 ALPHA (1) = -2.070 Q(PSF) = 42.887 PO = 2113.6 RUN NO = 11.000

SECTION (1)MAIN LND GR STRT DEPENDENT VARIABLE CP

DUMMY 1.0000

TAP	
201.000	-.1869
202.000	-.1768
203.000	-.1527
204.000	-.1678
205.000	-.1919
206.000	-.2111
211.000	-.1829
212.000	-.0218
213.000	-.1819
214.000	-.1607
215.000	-.1899
216.000	-.0490
221.000	-.1839
222.000	-.1537
223.000	-.1728
224.000	-.1718
225.000	-.1728
226.000	-.1728

OA163B MAIN GEAR STRUT (RFPW01)

BETA (11) = 5.010 ALPHA (2) = .010 Q(PSF) = 42.887 PO = 2113.6 RUN NO = 11.000

SECTION (1)MAIN LND GR STRT DEPENDENT VARIABLE CP

DUMMY 1.0000

TAP	
201.000	-.1425
202.000	-.1325
203.000	-.1083
204.000	-.1154
205.000	-.1395
206.000	-.1546
211.000	-.1375
212.000	-.0480
213.000	-.1405
214.000	-.1063
215.000	-.1375
216.000	-.0882
221.000	-.1305
222.000	-.1073
223.000	-.1385
224.000	-.1345
225.000	-.1375
226.000	-.1315

BETA (11) = 5.010 ALPHA (3) = 2.050 Q(PSF) = 42.887 PO = 2113.6 RUN NO = 11.000

SECTION (1)MAIN LND GR STRT DEPENDENT VARIABLE CP

DUMMY 1.0000

TAP	
201.000	-.0991
202.000	-.0821
203.000	-.0600
204.000	-.0509
205.000	-.0921
206.000	-.0961
211.000	-.0901
212.000	-.0509
213.000	-.0801
214.000	-.0600
215.000	-.0861
216.000	-.0891
221.000	-.0831
222.000	-.0660
223.000	-.0831
224.000	-.0791
225.000	-.0821
226.000	-.0811

OA163B MAIN GEAR STRUT (RFPW01)

BETA (11) = 5.010 ALPHA (4) = 4.130 Q(PSF) = 42.887 PO = 2113.6 RUN NO = 11.000

SECTION (1)MAIN LND GR STRT DEPENDENT VARIABLE CP

DUMMY 1.0000

TAP	
201.000	-.0511
202.000	-.0289
203.000	-.0168
204.000	.0304
205.000	-.0410
206.000	-.0269
211.000	-.0329
212.000	-.0450
213.000	-.0279
214.000	-.0138
215.000	-.0400
216.000	-.0702
221.000	-.0269
222.000	-.0329
223.000	-.0229
224.000	-.0218
225.000	-.0229
226.000	-.0259

BETA (11) = 5.010 ALPHA (5) = 6.180 Q(PSF) = 42.887 PO = 2113.6 RUN NO = 11.000

SECTION (1)MAIN LND GR STRT DEPENDENT VARIABLE CP

DUMMY 1.0000

TAP	
201.000	-.0037
202.000	.0304
203.000	.0254
204.000	.0969
205.000	.0093
206.000	.0153
211.000	.0103
212.000	-.0219
213.000	.0133
214.000	.0324
215.000	.0012
216.000	-.0440
221.000	.0183
222.000	.0083
223.000	.0244
224.000	.0224
225.000	.0224
226.000	.0173

OA163B MAIN GEAR STRUT (RFPW01)

BETA (11) = 5.010 ALPHA (6) = 8.250 Q(PSF) = 42.887 PO = 2113.6 RUN NO = 11.000

SECTION (1)MAIN LND GR STRT DEPENDENT VARIABLE CP

DUMMY 1.0000

TAP	
201.000	.0505
202.000	.1029
203.000	.0707
204.000	.1643
205.000	.0737
206.000	.0546
211.000	.0626
212.000	-.0007
213.000	.0646
214.000	.0747
215.000	.0495
216.000	-.0178
221.000	.0707
222.000	.0586
223.000	.0657
224.000	.0687
225.000	.0697
226.000	.0667

OA163B MAIN GEAR STRUT (RFPW02) (27 APR 77)

REFERENCE DATA

SREF = 2690.0000 SQ.FT. XMRP = 1076.7000 IN. XO
LREF = 474.8100 INCHES YMRP = .0000 IN. YO
BREF = 936.6800 INCHES ZMRP = 375.0000 IN. ZO
SCALE = .0405

PARAMETRIC DATA

SPDBRK = 25.000 BDFLAP = .000
ELV-L = .000 ELV-R = .000
PHI-N = 30.800 THETAN = 5.000
PHI-ML = 36.000 THETML = 5.600
PHI-MR = 36.000 THETMR = 5.600

BETA (1) = -5.050 ALPHA (1) = -2.070 Q(PSF) = 42.822 PO = 2113.6 RUN NO = 12.000

SECTION (1)MAIN LND GR STRT DEPENDENT VARIABLE CP

DUMMY 1.0000

TAP	
201.000	-.3120
202.000	-.3120
203.000	-.3150
204.000	-.3362
205.000	-.3241
206.000	-.3593
211.000	-.3120
212.000	-.1317
213.000	-.3160
214.000	-.3170
215.000	-.2959
216.000	-.0722
221.000	-.3130
222.000	-.3130
223.000	-.3120
224.000	-.3110
225.000	-.3130
226.000	-.3080

BETA (1) = -5.050 ALPHA (2) = -.010 Q(PSF) = 42.822 PO = 2113.6 RUN NO = 12.000

SECTION (1)MAIN LND GR STRT DEPENDENT VARIABLE CP

DUMMY 1.0000

TAP	
201.000	-.2613
202.000	-.2593
203.000	-.2583
204.000	-.2925
205.000	-.2714
206.000	-.3066
211.000	-.2603
212.000	-.1698
213.000	-.2643
214.000	-.2633
215.000	-.2563

OA163B MAIN GEAR STRUT (RFPW02)

BETA (1) = -5.050 ALPHA (2) = -.010

SECTION (1)MAIN LND GR STRT DEPENDENT VARIABLE CP

DUMMY 1.0000

TAP	
216.000	-.1335
221.000	-.2613
222.000	-.2603
223.000	-.2573
224.000	-.2583
225.000	-.2583
226.000	-.2543

BETA (1) = -5.050 ALPHA (3) = 2.060 Q(PSF) = 42.822 PO = 2113.6 RUN NO = 12.000

SECTION (1)MAIN LND GR STRT DEPENDENT VARIABLE CP

DUMMY 1.0000

TAP	
201.000	-.2090
202.000	-.2080
203.000	-.1999
204.000	-.2342
205.000	-.2160
206.000	-.2504
211.000	-.2059
212.000	-.1675
213.000	-.2080
214.000	-.2069
215.000	-.2069
216.000	-.1402
221.000	-.2100
222.000	-.2019
223.000	-.2049
224.000	-.2049
225.000	-.2059
226.000	-.2019

OA163B MAIN GEAR STRUT (RFPW02)

BETA (1) = -5.050 ALPHA (4) = 4.120 Q(PSF) = 42.822 PO = 2113.6 RUN NO = 12.000

SECTION (1)MAIN LND GR STRT DEPENDENT VARIABLE CP

DUMMY 1.0000

TAP	
201.000	-.1591
202.000	-.1511
203.000	-.1369
204.000	-.1723
205.000	-.1571
206.000	-.1884
211.000	-.1511
212.000	-.1561
213.000	-.1531
214.000	-.1490
215.000	-.1551
216.000	-.1299
221.000	-.1551
222.000	-.1450
223.000	-.1490
224.000	-.1480
225.000	-.1501
226.000	-.1480

BETA (1) = -5.050 ALPHA (5) = 6.220 Q(PSF) = 42.822 PO = 2113.6 RUN NO = 12.000

SECTION (1)MAIN LND GR STRT DEPENDENT VARIABLE CP

DUMMY 1.0000

TAP	
201.000	-.1173
202.000	-.0902
203.000	-.0751
204.000	-.0982
205.000	-.0962
206.000	-.1263
211.000	-.0912
212.000	-.1374
213.000	-.0942
214.000	-.0851
215.000	-.0942
216.000	-.1163
221.000	-.0982
222.000	-.0761
223.000	-.0912
224.000	-.0912
225.000	-.0932
226.000	-.0902

OA163B MAIN GEAR STRUT (RFPW02)

BETA (1) = -5.050 ALPHA (6) = 8.270 Q(PSF) = 42.822 PO = 2113.6 RUN NO = 12.000

SECTION (1)MAIN LND GR STRT DEPENDENT VARIABLE CP

DUMMY 1.0000

TAP	
201.000	-.0461
202.000	-.0370
203.000	-.0138
204.000	-.0279
205.000	-.0431
206.000	-.0632
211.000	-.0370
212.000	-.1106
213.000	-.0380
214.000	-.0118
215.000	-.0360
216.000	-.0874
221.000	-.0330
222.000	-.0188
223.000	-.0400
224.000	-.0380
225.000	-.0410
226.000	-.0380

BETA (2) = -4.040 ALPHA (1) = -2.030 Q(PSF) = 42.870 PO = 2113.6 RUN NO = 13.000

SECTION (1)MAIN LND GR STRT DEPENDENT VARIABLE CP

DUMMY 1.0000

TAP	
201.000	-.2977
202.000	-.2977
203.000	-.2987
204.000	-.3279
205.000	-.3118
206.000	-.3440
211.000	-.2977
212.000	-.1195
213.000	-.3007
214.000	-.3027
215.000	-.2786
216.000	-.1054
221.000	-.2987
222.000	-.2987
223.000	-.2977
224.000	-.2977
225.000	-.2977
226.000	-.2927

OA163B MAIN GEAR S"RUT (RFPW02)

BETA (2) = -4.040 ALPHA (2) = .020 Q(PSF) = 42.870 PO = 2113.6 RUN NO = 13.000

SECTION (1)MAIN LND GR STRT DEPENDENT VARIABLE CP

DUMMY 1.0000

TAP	
201.000	-.2462
202.000	-.2472
203.000	-.2452
204.000	-.2844
205.000	-.2613
206.000	-.2904
211.000	-.2482
212.000	-.1305
213.000	-.2482
214.000	-.2492
215.000	-.2371
216.000	-.!244
221.000	-.2492
222.000	-.2472
223.000	-.2452
224.000	-.2452
225.000	-.2452
226.000	-.2411

BETA (2) = -4.040 ALPHA (3) = 2.060 Q(PSF) = 42.870 PO = 2113.6 RUN NO = 13.000

SECTION (1)MAIN LND GR STRT DEPENDENT VARIABLE CP

DUMMY 1.0000

TAP	
201.000	-.1962
202.000	-.1962
203.000	-.1881
204.000	-.2234
205.000	-.2083
206.000	-.2355
211.000	-.1972
212.000	-.1438
213.000	-.2002
214.000	-.1952
215.000	-.1982
216.000	-.1408
221.000	-.2012
222.000	-.1932
223.000	-.1932
224.000	-.1932
225.000	-.1942
226.000	-.1922

0A163B MAIN GEAR STRUT (RFP'S02)

BETA (2) = -4.040 ALPHA (4) = 4.140 Q(PSF) = 42.870 PO = 2113.6 RUN NO = 13.000

SECTION (1)MAIN LND GR STRT DEPENDENT VARIABLE CP

DUMMY 1.0000

TAP	
201.000	-.1527
202.000	-.1356
203.000	-.1225
204.000	-.1617
205.000	-.1466
206.000	-.1738
211.000	-.1396
212.000	-.1416
213.000	-.1406
214.000	-.1335
215.000	-.1396
216.000	-.1356
221.000	-.1426
222.000	-.1265
223.000	-.1366
224.000	-.1356
225.000	-.1386
226.000	-.1366

BETA (2) = -4.040 ALPHA (5) = 6.220 Q(PSF) = 42.870 PO = 2113.6 RUN NO = 13.000

SECTION (1)MAIN LND GR STRT DEPENDENT VARIABLE CP

DUMMY 1.0000

TAP	
201.000	-.1024
202.000	-.0792
203.000	-.0647
204.000	-.0782
205.000	-.0893
206.000	-.1155
211.000	-.0883
212.000	-.1256
213.000	-.0863
214.000	-.0672
215.000	-.0883
216.000	-.1145
221.000	-.0883
222.000	-.0621
223.000	-.0843
224.000	-.0823
225.000	-.0823
226.000	-.0823

OA163B MAIN GEAR STRUT (RFPW02)

BETA (2) = -4.050 ALPHA (6) = 8.270 Q(PSF) = 42.870 PO = 2113.6 RUN NO = 13.000

SECTION (1)MAIN LND GR STRT DEPENDENT VARIABLE CP

DUMMY 1.0000

TAP	
201.000	-.0349
202.000	-.0269
203.000	-.0087
204.000	-.0148
205.000	-.0299
206.000	-.0470
211.000	-.0299
212.000	-.1003
213.000	-.0259
214.000	-.0057
215.000	-.0218
216.000	-.0832
221.000	-.0208
222.000	-.0108
223.000	-.0259
224.000	-.0289
225.000	-.0279
226.000	-.0218

BETA (3) = -2.970 ALPHA (1) = -2.060 Q(PSF) = 42.832 PO = 2113.6 RUN NO = 14.000

SECTION (1)MAIN LND GR STRT DEPENDENT VARIABLE CP

DUMMY 1.0000

TAP	
201.000	-.2894
202.000	-.2904
203.000	-.2854
204.000	-.3227
205.000	-.3045
206.000	-.3328
211.000	-.2904
212.000	-.1289
213.000	-.2914
214.000	-.2934
215.000	-.2662
216.000	-.1228
221.000	-.2904
222.000	-.2884
223.000	-.2874
224.000	-.2884
225.000	-.2884
226.000	-.2854

OA163B MAIN GEAR STRUT (RFPW02)

BETA (3) = -2.970 ALPHA (2) = .010 Q(PSF) = 42.832 PO = 2113.6 RUN NO = 14.000

SECTION (1)MAIN LND GR STRT DEPENDENT VARIABLE CP

DUMMY 1.0000

TAP	
201.000	-.2400
202.000	-.2370
203.000	-.2340
204.000	-.2692
205.000	-.2521
206.000	-.2793
211.000	-.2390
212.000	-.1596
213.000	-.2380
214.000	-.2400
215.000	-.2290
216.000	-.1566
221.000	-.2420
222.000	-.2350
223.000	-.2350
224.000	-.2350
225.000	-.2360
226.000	-.2330

BETA (3) = -2.970 ALPHA (3) = 2.070 Q(PSF) = 42.832 PO = 2113.6 RUN NO = 14.000

SECTION (1)MAIN LND GR STRT DEPENDENT VARIABLE CP

DUMMY 1.0000

TAP	
201.000	-.1782
202.000	-.1812
203.000	-.1711
204.000	-.2064
205.000	-.1943
206.000	-.2195
211.000	-.1832
212.000	-.1671
213.000	-.1852
214.000	-.1792
215.000	-.1882
216.000	-.1620
221.000	-.1872
222.000	-.1751
223.000	-.1782
224.000	-.1771
225.000	-.1812
226.000	-.1751

OA163B MAIN GEAR STRUT (RFPW02)

BETA (3) = -2.970 ALPHA (4) = 4.130 Q(PSF) = 42.832 PO = 2113.6 RUN NO = 14.000

SECTION (1)MAIN LND GR STRT DEPENDENT VARIABLE CP

DUMMY 1.0000

TAP	
201.000	-.1539
202.000	-.1216
203.000	-.1106
204.000	-.1368
205.000	-.1327
206.000	-.1599
211.000	-.1226
212.000	-.1509
213.000	-.1287
214.000	-.1206
215.000	-.1287
216.000	-.1408
221.000	-.1307
222.000	-.1116
223.000	-.1237
224.000	-.1257
225.000	-.1257
226.000	-.1237

BETA (3) = -2.970 ALPHA (5) = 6.200 Q(PSF) = 42.832 PO = 2113.6 RUN NO = 14.000

SECTION (1)MAIN LND GR STRT DEPENDENT VARIABLE CP

DUMMY 1.0000

TAP	
201.000	-.0803
202.000	-.0722
203.000	-.0491
204.000	-.0632
205.000	-.0803
206.000	-.1004
211.000	-.0773
212.000	-.1287
213.000	-.0732
214.000	-.0470
215.000	-.0742
216.000	-.1166
221.000	-.0712
222.000	-.0531
223.000	-.0783
224.000	-.0753
225.000	-.0763
226.000	-.0732

OA163B MAIN GEAR STRUT (RFPW02)

BETA (3) = -2.970 ALPHA (6) = 8.280 Q(PSF) = 42.832 PO = 2113.6 RUN NO = 14.000

SECTION (1)MAIN LND GR STRT DEPENDENT VARIABLE CP

DUMMY 1.0000

TAP	
201.000	-.0249
202.000	-.0128
203.000	.0012
204.000	.0012
205.000	-.0188
206.000	-.0299
211.000	-.0178
212.000	-.1004
213.000	-.0098
214.000	.0093
215.000	-.0108
216.000	-.0823
221.000	-.0098
222.000	.0012
223.000	-.0128
224.000	-.0128
225.000	-.0128
226.000	-.0077

BETA (4) = -2.040 ALPHA (1) = -2.060 Q(PSF) = 42.852 PO = 2113.6 RUN NO = 15.000

SECTION (1)MAIN LND GR STRT DEPENDENT VARIABLE CP

DUMMY 1.0000

TAP	
201.000	-.2787
202.000	-.2706
203.000	-.2676
204.000	-.3058
205.000	-.2857
206.000	-.3139
211.000	-.2726
212.000	-.1236
213.000	-.2756
214.000	-.2797
215.000	-.2515
216.000	-.1074
221.000	-.2776
222.000	-.2716
223.000	-.2716
224.000	-.2726
225.000	-.2736
226.000	-.2696

OA163B MAIN GEAR STRUT (RFPW02)

BETA (4) = -2.030 ALPHA (2) = .010 Q(PSF) = 42.852 PO = 2113.6 RUN NO = 15.000

SECTION (1)MAIN LND GR STRT DEPENDENT VARIABLE CP

DUMMY 1.0000

TAP	
201.000	-.2297
202.000	-.2227
203.000	-.2176
204.000	-.2539
205.000	-.2418
206.000	-.2650
211.000	-.2267
212.000	-.1763
213.000	-.2277
214.000	-.2267
215.000	-.2227
216.000	-.1641
221.000	-.2287
222.000	-.2196
223.000	-.2196
224.000	-.2217
225.000	-.2206
226.000	-.2186

BETA (4) = -2.040 ALPHA (3) = 2.080 Q(PSF) = 42.852 PO = 2113.6 RUN NO = 15.000

SECTION (1)MAIN LND GR STRT DEPENDENT VARIABLE CP

DUMMY 1.0000

TAP	
201.000	-.1661
202.000	-.1701
203.000	-.1550
204.000	-.1923
205.000	-.1832
206.000	-.2074
211.000	-.1711
212.000	-.1711
213.000	-.1731
214.000	-.1651
215.000	-.1751
216.000	-.1600
221.000	-.1772
222.000	-.1600
223.000	-.1701
224.000	-.1701
225.000	-.1721
226.000	-.1691

OA163B MAIN GEAR STRUT (RFPW02)

BETA (4) = -2.040 ALPHA (4) = 4.120 Q(PSF) = 42.812 PO = 2113.6 RUN NO = 15.000

SECTION (1)MAIN LND GR STRT DEPENDENT VARIABLE CP

DUMMY 1.0000

TAP	
201.000	-.1392
202.000	-.1121
203.000	-.0961
204.000	-.1152
205.000	-.1212
206.000	-.1483
211.000	-.1131
212.000	-.1543
213.000	-.1192
214.000	-.1051
215.000	-.1202
216.000	-.1443
221.000	-.1232
222.000	-.0981
223.000	-.1141
224.000	-.1131
225.000	-.1131
226.000	-.1111

BETA (4) = -2.040 ALPHA (5) = 6.200 Q(PSF) = 42.852 PO = 2113.6 RUN NO = 15.000

SECTION (1)MAIN LND GR STRT DEPENDENT VARIABLE CP

DUMMY 1.0000

TAP	
201.000	-.0732
202.000	-.0591
203.000	-.0410
204.000	-.0500
205.000	-.0651
206.000	-.0852
211.000	-.0641
212.000	-.1285
213.000	-.0621
214.000	-.0349
215.000	-.0621
216.000	-.1164
221.000	-.0581
222.000	-.0430
223.000	-.0671
224.000	-.0621
225.000	-.0641
226.000	-.0591

OA163B MAIN GEAR STRUT (RFPW02)

BETA (4) = -2.040 ALPHA (6) = 8.290 Q(PSF) = 42.852 PO = 2113.6 RUN NO = 15.000

SECTION (1)MAIN LND GR STRT DEPENDENT VARIABLE CP

DUMMY 1.0000

TAP	
201.000	-.0148
202.000	-.0017
203.000	.0133
204.000	.0214
205.000	-.0088
206.000	-.0188
211.000	-.0047
212.000	-.0965
213.000	.0053
214.000	.0214
215.000	.0022
216.000	-.0793
221.000	.0022
222.000	.0133
223.000	.0022
224.000	.0012
225.000	.0053
226.000	.0073

BETA (5) = -1.030 ALPHA (1) = -2.040 Q(PSF) = 42.897 PO = 2113.7 RUN NO = 16.000

SECTION (1)MAIN LND GR STRT DEPENDENT VARIABLE CP

DUMMY 1.0000

TAP	
201.000	-.2676
202.000	-.2616
203.000	-.2536
204.000	-.2977
205.000	-.2777
206.000	-.3038
211.000	-.2656
212.000	-.1271
213.000	-.2656
214.000	-.2646
215.000	-.2486
216.000	-.1161
221.000	-.2656
222.000	-.2576
223.000	-.2596
224.000	-.2596
225.000	-.2596
226.000	-.2566

OA163B MAIN GEAR STRUT (RFPW02)

BETA (5) = -1.040 ALPHA (2) = .020 Q(PSF) = 42.897 PO = 2113.7 RUN NO = 16.000

SECTION (1)MAIN LND GP STRT DEPENDENT VARIABLE CP

DUMMY 1.0000

TAP	
201.000	-.2123
202.000	-.2102
203.000	-.1982
204.000	-.2314
205.000	-.2254
206.000	-.2485
211.000	-.2163
212.000	-.1427
213.000	-.2173
214.000	-.2092
215.000	-.2163
216.000	-.1417
221.000	-.2183
222.000	-.2022
223.000	-.2082
224.000	-.2072
225.000	-.2072
226.000	-.2052

BETA (5) = -1.040 ALPHA (3) = 2.060 Q(PSF) = 42.897 PO = 2113.7 RUN NO = 16.000

SECTION (1)MAIN LND GR STRT DEPENDENT VARIABLE CP

DUMMY 1.0000

TAP	
201.000	-.1702
202.000	-.1571
203.000	-.1409
204.000	-.1752
205.000	-.1702
206.000	-.1924
211.000	-.1510
212.000	-.1429
213.000	-.1601
214.000	-.1520
215.000	-.1611
216.000	-.1419
221.000	-.1641
222.000	-.1439
223.000	-.1550
224.000	-.1560
225.000	-.1560
226.000	-.1510

OA163B MAIN GEAR STRUT (RFPW02)

BETA (5) = -1.030 ALPHA (4) = 4.120 Q(PSF) = 42.897 PO = 2113.7 RUN NO = 16.000

SECTION (1)MAIN LND GR STRT DEPENDENT VARIABLE CP

DUMMY 1.0000

TAP	
201.000	-.1183
202.000	-.1043
203.000	-.0801
204.000	-.0952
205.000	-.1173
206.000	-.1324
211.000	-.1073
212.000	-.1254
213.000	-.1073
214.000	-.0821
215.000	-.1143
216.000	-.1234
221.000	-.1083
222.000	-.0771
223.000	-.1063
224.000	-.1022
225.000	-.1032
226.000	-.1043

BETA (5) = -1.040 ALPHA (5) = 6.200 Q(PSF) = 42.897 PO = 2113.7 RUN NO = 16.000

SECTION (1)MAIN LND GR STRT DEPENDENT VARIABLE CP

DUMMY 1.0000

TAP	
201.000	-.0632
202.000	-.0511
203.000	-.0360
204.000	-.0340
205.000	-.0572
206.000	-.0713
211.000	-.0552
212.000	-.1066
213.000	-.0501
214.000	-.0229
215.000	-.0491
216.000	-.1016
221.000	-.0461
222.000	-.0330
223.000	-.0542
224.000	-.0481
225.000	-.0501
226.000	-.0451

OA163B MAIN GEAR STRUT (RFPW02)

BETA (5) = -1.040 ALPHA (6) = 8.270 Q(PSF) = 42.397 PO = 2113.7 RUN NO = 16.000

SECTION (1)MAIN LND GR STRT DEPENDENT VARIABLE CP

DUMMY 1.0000

TAP	
201.000	-.0067
202.000	.0052
203.000	.0223
204.000	.0383
205.000	-.0017
206.000	-.0017
211.000	.0072
212.000	-.0709
213.000	.0122
214.000	.0263
215.000	.0052
216.000	-.0569
221.000	.0082
222.000	.0122
223.000	.0102
224.000	.0122
225.000	.0112
226.000	.0122

BETA (6) = .000 ALPHA (1) = -2.060 Q(PSF) = 42.960 PO = 2113.7 RUN NO = 17.000

SECTION (1)MAIN LND GR STRT DEPENDENT VARIABLE CP

DUMMY 1.0000

TAP	
201.000	-.2565
202.000	-.2485
203.000	-.2375
204.000	-.2826
205.000	-.2656
206.000	-.2907
211.000	-.2535
212.000	-.0890
213.000	-.2535
214.000	-.2485
215.000	-.2455
216.000	-.0900
221.000	-.2545
222.000	-.2425
223.000	-.2445
224.000	-.2435
225.000	-.2455
226.000	-.2435

OA163B MAIN GEAR STRUT (RFPW02)

BETA (6) = -.010 ALPHA (2) = .020 Q(PSF) = 42.860 PO = 2113.7 RUN NO = 17.000

SECTION (1)MAIN LND GR STRT DEPENDENT VARIABLE CP

DUMMY 1.0000

TAP	
201.000	-.1897
202.000	-.1948
203.000	-.1797
204.000	-.2219
205.000	-.2119
206.000	-.2340
211.000	-.1968
212.000	-.1133
213.000	-.1998
214.000	-.1928
215.000	-.2018
216.000	-.1214
221.000	-.2018
222.000	-.1867
223.000	-.1918
224.000	-.1908
225.000	-.1928
226.000	-.1908

BETA (6) = -.010 ALPHA (3) = 2.060 Q(PSF) = 42.860 PO = 2113.7 RUN NO = 17.000

SECTION (1)MAIN LND GR STRT DEPENDENT VARIABLE CP

DUMMY 1.0000

TAP	
201.000	-.1621
202.000	-.1419
203.000	-.1238
204.000	-.1470
205.000	-.1591
206.000	-.1762
211.000	-.1429
212.000	-.1127
213.000	-.1470
214.000	-.1399
215.000	-.1530
216.000	-.1248
221.000	-.1520
222.000	-.1258
223.000	-.1399
224.000	-.1409
225.000	-.1419
226.000	-.1399

OA163B MAIN GEAR STRUT (RFPW02)

BETA (6) = -.010 ALPHA (4) = 4.140 Q(PSF) = 42.360 PO = 2113.7 RUN NO = 17.000

SECTION (1)MAIN LND GR STRT DEPENDENT VARIABLE CP

DUMMY 1.0000

TAP	
201.000	-.1069
202.000	-.0978
203.000	-.0746
204.000	-.0857
205.000	-.1069
206.000	-.1231
211.000	-.1019
212.000	-.0776
213.000	-.1019
214.000	-.0675
215.000	-.1019
216.000	-.0897
221.000	-.0938
222.000	-.0705
223.000	-.0939
224.000	-.0978
225.000	-.1029
226.000	-.0948

BETA (6) = -.010 ALPHA (5) = 6.200 Q(PSF) = 42.860 PO = 2113.7 RUN NO = 17.000

SECTION (1)MAIN LND GR STRT DEPENDENT VARIABLE CP

DUMMY 1.0000

TAP	
201.000	-.0530
202.000	-.0369
203.000	-.0218
204.000	-.0168
205.000	-.0459
206.000	-.0580
211.000	-.0429
212.000	-.0640
213.000	-.0349
214.000	-.0138
215.000	-.0349
216.000	-.0710
221.000	-.0329
222.000	-.0198
223.000	-.0379
224.000	-.0359
225.000	-.0359
226.000	-.0339

OA163B MAIN GEAR STRUT (RFPW02)

BETA (6) = -.010 ALPHA (6) = 8.270 Q(PSF) = 42.860 PO = 2113.7 RUN NO = 17.000

SECTION (1)MAIN LND GR STRT DEPENDENT VARIABLE CP

DUMMY 1.0000

TAP	
201.000	.0022
202.000	.0194
203.000	.0335
204.000	.0627
205.000	.0093
206.000	.0163
211.000	.0173
212.000	-.0440
213.000	.0204
214.000	.0365
215.000	.0173
216.000	-.0400
221.000	.0234
222.000	.0173
223.000	.0254
224.000	.0264
225.000	.0234
226.000	.0224

BETA (7) = .980 ALPHA (1) = -2.070 Q(PSF) = 42.917 PO = 2113.7 RUN NO = 18.000

SECTION (1)MAIN LND GR STRT DEPENDENT VARIABLE CP

DUMMY 1.0000

TAP	
201.000	-.2405
202.000	-.2334
203.000	-.2194
204.000	-.2635
205.000	-.2515
206.000	-.2736
211.000	-.2395
212.000	-.0789
213.000	-.2374
214.000	-.2344
215.000	-.2385
216.000	-.0820
221.000	-.2374
222.000	-.2234
223.000	-.2294
224.000	-.2304
225.000	-.2304
226.000	-.2284

OA163B MAIN GEAR STRUT (RFPW02)

BETA (7) = .980 ALPHA (2) = .020 Q(PSF) = 42.917 PO = 2113.7 RUN NO = 18.000

SECTION (1)MAIN LND GR STRT DEPENDENT VARIABLE CP

DUMMY 1.0000

TAP	
201.000	-.1867
202.000	-.1796
203.000	-.1635
204.000	-.1987
205.000	-.1977
206.000	-.2168
211.000	-.1796
212.000	-.1404
213.000	-.1867
214.000	-.1806
215.000	-.1897
216.000	-.1525
221.000	-.1867
222.000	-.1676
223.000	-.1766
224.000	-.1755
225.000	-.1766
226.000	-.1756

BETA (7) = .980 ALPHA (3) = 2.060 Q(PSF) = 42.917 PO = 2113.7 RUN NO = 18.000

SECTION (1)MAIN LND GR STRT DEPENDENT VARIABLE CP

DUMMY 1.0000

TAP	
201.000	-.1499
202.000	-.1318
203.000	-.1096
204.000	-.1308
205.000	-.1479
206.000	-.1640
211.000	-.1348
212.000	-.1318
213.000	-.1368
214.000	-.1176
215.000	-.1449
216.000	-.1459
221.000	-.1418
222.000	-.1106
223.000	-.1318
224.000	-.1308
225.000	-.1308
226.000	-.1308

OA163B MAIN GEAR STRUT (RFPW02)

BETA (7) = .980 ALPHA (4) = 4.120 Q(PSF) = 42.917 PO = 2113.7 RUN NO = 18.000

SECTION (1)MAIN LND GR STRT DEPENDENT VARIABLE CP

DUMMY 1.0000

TAP	
201.000	-.0933
202.000	-.0822
203.000	-.0601
204.000	-.0671
205.000	-.0862
206.000	-.1054
211.000	-.0842
212.000	-.1164
213.000	-.0812
214.000	-.0540
215.000	-.0832
216.000	-.1245
221.000	-.0782
222.000	-.0601
223.000	-.0862
224.000	-.0812
225.000	-.0852
226.000	-.0802

BETA (7) = .980 ALPHA (5) = 6.200 Q(PSF) = 42.917 PO = 2113.7 RUN NO = 18.000

SECTION (1)MAIN LND GR STRT DEPENDENT VARIABLE CP

DUMMY 1.0000

TAP	
201.000	-.0380
202.000	-.0269
203.000	-.0077
204.000	.0063
205.000	-.0359
206.000	-.0359
211.000	-.0289
212.000	-.0863
213.000	-.0208
214.000	-.0027
215.000	-.0259
216.000	-.0833
221.000	-.0188
222.000	-.0168
223.000	-.0218
224.000	-.0208
225.000	-.0188
226.000	-.0198

OA163B MAIN GEAR STRUT (RFPW02)

BETA (7) = .980 ALPHA (6) = 8.270 Q(PSF) = 42.917 PO = 2113.7 RUN NO = 18.000

SECTION (1)MAIN LND GR STRT DEPENDENT VARIABLE CP

DUMMY 1.0000

TAP	
201.000	.0123
202.000	.0333
203.000	.0434
204.000	.0905
205.000	.0233
206.000	.0303
211.000	.0303
212.000	-.0549
213.000	.0333
214.000	.0474
215.000	.0223
216.000	-.0479
221.000	.0343
222.000	.0273
223.000	.0404
224.000	.0404
225.000	.0373
226.000	.0353

BETA (8) = 1.970 ALPHA (1) = -2.060 Q(PSF) = 42.922 PO = 2113.7 RUN NO = 19.000

SECTION (1)MAIN LND GR STRT DEPENDENT VARIABLE CP

DUMMY 1.0000

TAP	
201.000	-.2155
202.000	-.2155
203.000	-.2034
204.000	-.2407
205.000	-.2346
206.000	-.2558
211.000	-.2225
212.000	-.0955
213.000	-.2205
214.000	-.2195
215.000	-.2225
216.000	-.0965
221.000	-.2225
222.000	-.2064
223.000	-.2114
224.000	-.2124
225.000	-.2124
226.000	-.2124

OA163B MAIN GEAR STRUT (RFPW02)

BETA (B) = 1.970 ALPHA (2) = .010 Q(PSF) = 42.822 PO = 2113.7 RUN NO = 19.000

SECTION (1)MAIN LND GR STRT DEPENDENT VARIABLE CP

DUMMY 1.0000

TAP	
201.000	-.1740
202.000	-.1649
203.000	-.1448
204.000	-.1700
205.000	-.1841
206.000	-.2012
211.000	-.1659
212.000	-.1095
213.000	-.1700
214.000	-.1609
215.000	-.1790
216.000	-.1236
221.000	-.1720
222.000	-.1478
223.000	-.1609
224.000	-.1589
225.000	-.1629
226.000	-.1599

BETA (B) = 1.970 ALPHA (3) = 2.070 Q(PSF) = 42.822 PO = 2113.7 RUN NO = 19.000

SECTION (1)MAIN LND GR STRT DEPENDENT VARIABLE CP

DUMMY 1.0000

TAP	
201.000	-.1279
202.000	-.1188
203.000	-.0926
204.000	-.1097
205.000	-.1339
206.000	-.1450
211.000	-.1238
212.000	-.0976
213.000	-.1279
214.000	-.0885
215.000	-.1319
216.000	-.1208
221.000	-.1188
222.000	-.0946
223.000	-.1238
224.000	-.1198
225.000	-.1218
226.000	-.1188

OA163B MAIN GEAR STRUT (RFPW02)

BETA (8) = 1.970 ALPHA (4) = 4.130 Q(PSF) = 42.822 PO = 2113.7 RUN NO = 19.000

SECTION (1)MAIN LND GR STRT DEPENDENT VARIABLE CP

DUMMY 1.0000

TAP	
201.000	-.0803
202.000	-.0662
203.000	-.0430
204.000	-.0490
205.000	-.0742
206.000	-.0863
211.000	-.0702
212.000	-.0873
213.000	-.0672
214.000	-.0430
215.000	-.0662
216.000	-.1004
221.000	-.0631
222.000	-.0470
223.000	-.0692
224.000	-.0662
225.000	-.0702
226.000	-.0652

BETA (8) = 1.970 ALPHA (5) = 6.200 Q(PSF) = 42.822 PO = 2113.7 RUN NO = 19.000

SECTION (1)MAIN LND GR STRT DEPENDENT VARIABLE CP

DUMMY 1.0000

TAP	
201.000	-.0279
202.000	-.0138
203.000	.0052
204.000	.0294
205.000	-.0218
206.000	-.0188
211.000	-.0148
212.000	-.0631
213.000	-.0077
214.000	.0083
215.000	-.0158
216.000	-.0702
221.000	-.0077
222.000	-.0108
223.000	-.0037
224.000	-.0057
225.000	-.0057
226.000	-.0067

OA163B MAIN GEAR STRUT (RFPW02)

BETA (8) = 1.970 ALPHA (6) = 8.270 Q(PSF) = 42.822 PO = 2113.7 RUN NO = 19.000

SECTION (1)MAIN LND GR STRT DEPENDENT VARIABLE CP

DUMMY 1.0000

TAP	
201.000	.0234
202.000	.0536
203.000	.0506
204.000	.1172
205.000	.0365
206.000	.0395
211.000	.0426
212.000	-.0350
213.000	.0466
214.000	.0547
215.000	.0305
216.000	-.0370
221.000	.0446
222.000	.0355
223.000	.0466
224.000	.0466
225.000	.0476
226.000	.0436

BETA (9) = 2.990 ALPHA (1) = -2.060 Q(PSF) = 42.823 PO = 2120.5 RUN NO = 20.000

SECTION (1)MAIN LND GR STRT DEPENDENT VARIABLE CP

DUMMY 1.0000

TAP	
201.000	-.2088
202.000	-.1977
203.000	-.1837
204.000	-.2128
205.000	-.2158
206.000	-.2370
211.000	-.2008
212.000	-.1304
213.000	-.2048
214.000	-.1998
215.000	-.2058
216.000	-.0731
221.000	-.2058
222.000	-.1857
223.000	-.1937
224.000	-.1937
225.000	-.1937
226.000	-.1927

OA163B MAIN GEAR STRUT (RFPW02)

BETA (9) = 2.990 ALPHA (2) = -.020 Q(PSF) = 42.823 PO = 2120.5 RUN NO = 20.000

SECTION (1)MAIN LND GR STRT DEPENDENT VARIABLE CP

DUMMY 1.0000

TAP	
201.000	-.1673
202.000	-.1552
203.000	-.1299
204.000	-.1481
205.000	-.1703
206.000	-.1895
211.000	-.1572
212.000	-.1309
213.000	-.1582
214.000	-.1421
215.000	-.1683
216.000	-.0885
221.000	-.1643
222.000	-.1330
223.000	-.1511
224.000	-.1511
225.000	-.1511
226.000	-.1511

BETA (9) = 2.990 ALPHA (3) = 2.050 Q(PSF) = 42.823 PO = 2120.5 RUN NO = 20.000

SECTION (1)MAIN LND GR STRT DEPENDENT VARIABLE CP

DUMMY 1.0000

TAP	
201.000	-.1146
202.000	-.1066
203.000	-.0824
204.000	-.0915
205.000	-.1146
206.000	-.1298
211.000	-.1096
212.000	-.1187
213.000	-.1116
214.000	-.0794
215.000	-.1106
216.000	-.0854
221.000	-.1046
222.000	-.0824
223.000	-.1116
224.000	-.1056
225.000	-.1096
226.000	-.1076

OA163B MAIN GEAR STRUT (RFPW02)

BETA (9) = 2.990 ALPHA (4) = 4.130 Q(PSF) = 42.823 PO = 2120.5 RUN NO = 20.000

SECTION (1)MAIN LND GR STRT DEPENDENT VARIABLE CP

DUMMY 1.0000

TAP	
201.000	-.0673
202.000	-.0532
203.000	-.0310
204.000	-.0229
205.000	-.0543
206.000	-.0673
211.000	-.0572
212.000	-.0946
213.000	-.0512
214.000	-.0280
215.000	-.0562
216.000	-.0693
221.000	-.0502
222.000	-.0431
223.000	-.0502
224.000	-.0492
225.000	-.0502
226.000	-.0502

BETA (9) = 2.990 ALPHA (5) = 6.190 Q(PSF) = 42.823 PO = 2120.5 RUN NO = 20.000

SECTION (1)MAIN LND GR STRT DEPENDENT VARIABLE CP

DUMMY 1.0000

TAP	
201.000	-.0158
202.000	.0052
203.000	.0153
204.000	.0626
205.000	-.0088
206.000	.0002
211.000	.0012
212.000	-.0682
213.000	.0063
214.000	.0183
215.000	-.0098
216.000	-.0450
221.000	.0042
222.000	-.0027
223.000	.0113
224.000	.0093
225.000	.0083
226.000	.0063

OA163B MAIN GEAR STRUT (RFPW02)

BETA (9) = 2.990 ALPHA (6) = 8.260 Q(PSF) = 42.823 PO = 2120.5 RUN NO = 20.000

SECTION (1)MAIN LND GR STRT DEPENDENT VARIABLE CP

DUMMY 1.0000

TAP	
201.000	.0365
202.000	.0657
203.000	.0586
204.000	.1372
205.000	.0536
206.000	.0536
211.000	.0516
212.000	-.0369
213.000	.0536
214.000	.0616
215.000	.0375
216.000	-.0168
221.000	.0546
222.000	.0415
223.000	.0566
224.000	.0536
225.000	.0566
226.000	.0546

BETA (10) = 4.060 ALPHA (1) = -2.050 Q(PSF) = 42.778 PO = 2120.6 RUN NO = 21.000

SECTION (1)MAIN LND GR STRT DEPENDENT VARIABLE CP

DUMMY 1.0000

TAP	
201.000	-.1948
202.000	-.1837
203.000	-.1665
204.000	-.1847
205.000	-.2029
206.000	-.2201
211.000	-.1888
212.000	-.0381
213.000	-.1928
214.000	-.1847
215.000	-.1948
216.000	-.0310
221.000	-.1938
222.000	-.1685
223.000	-.1797
224.000	-.1787
225.000	-.1797
226.000	-.1807

OA163B MAIN GEAR STRUT (RFPW02)

BETA (10) = 4.060 ALPHA (2) = .000 Q(PSF) = 42.778 PO = 2120.6 RUN NO = 21.000

SECTION (1)MAIN LND GR STRT DEPENDENT VARIABLE CP

DUMMY 1.0000

TAP	
201.000	-.1519
202.000	-.1398
203.000	-.1176
204.000	-.1297
205.000	-.1539
206.000	-.1690
211.000	-.1448
212.000	-.0461
213.000	-.1478
214.000	-.1116
215.000	-.1539
216.000	-.0561
221.000	-.1428
222.000	-.1156
223.000	-.1408
224.000	-.1398
225.000	-.1398
226.000	-.1378

BETA (10) = 4.060 ALPHA (3) = 2.070 Q(PSF) = 42.778 PO = 2120.6 RUN NO = 21.000

SECTION (1)MAIN LND GR STRT DEPENDENT VARIABLE CP

DUMMY 1.0000

TAP	
201.000	-.1016
202.000	-.0945
203.000	-.0673
204.000	-.0703
205.000	-.0996
206.000	-.1127
211.000	-.0955
212.000	-.0380
213.000	-.0915
214.000	-.0653
215.000	-.0935
216.000	-.0582
221.000	-.0905
222.000	-.0703
223.000	-.0965
224.000	-.0915
225.000	-.0965
226.000	-.0935

OA163B MAIN GEAR STRUT (RFPW02)

BETA (10) = 4.060 ALPHA (4) = 4.110 Q(PSF) = 42.778 PO = 2120.6 RUN NO = 21.000

SECTION (1)MAIN LND GR STRT DEPENDENT VARIABLE CP

DUMMY 1.0000

TAP	
201.000	-.0551
202.000	-.0400
203.000	-.0219
204.000	.0063
205.000	-.0481
206.000	-.0390
211.000	-.0410
212.000	-.0239
213.000	-.0330
214.000	-.0168
215.000	-.0430
216.000	-.0451
221.000	-.0349
222.000	-.0360
223.000	-.0289
224.000	-.0279
225.000	-.0289
226.000	-.0309

BETA (10) = 4.060 ALPHA (5) = 6.190 Q(PSF) = 42.778 PO = 2120.6 RUN NO = 21.000

SECTION (1)MAIN LND GR STRT DEPENDENT VARIABLE CP

DUMMY 1.0000

TAP	
201.000	-.0037
202.000	.0184
203.000	.0234
204.000	.0910
205.000	.0103
206.000	.0163
211.000	.0143
212.000	-.0017
213.000	.0163
214.000	.0264
215.000	.0012
216.000	-.0239
221.000	.0163
222.000	.0053
223.000	.0184
224.000	.0194
225.000	.0204
226.000	.0174

DATE 27 APR 77 OA163B PRESSURE DATA LISTING

OA163B MAIN GEAR STRUT (RFPW02)

BETA (10) = 4.060 ALPHA (6) = 8.260 Q(PSF) = 42.778 PO = 2120.6 RUN NO = 21.000

SECTION (1)MAIN LND GR STRT DEPENDENT VARIABLE CP

DUMMY 1.0000

TAP	
201.000	.0416
202.000	.0809
203.000	.0658
204.000	.1636
205.000	.0648
206.000	.0587
211.000	.0567
212.000	.0204
213.000	.0547
214.000	.0708
215.000	.0416
216.000	-.0017
221.000	.0607
222.000	.0466
223.000	.0628
224.000	.0648
225.000	.0638
226.000	.0607

BETA (11) = 5.030 ALPHA (1) = -2.070 Q(PSF) = 42.767 PO = 2120.6 RUN NO = 22.000

SECTION (1)MAIN LND GR STRT DEPENDENT VARIABLE CP

DUMMY 1.0000

TAP	
201.000	-.1829
202.000	-.1728
203.000	-.1497
204.000	-.1638
205.000	-.1869
206.000	-.2060
211.000	-.1778
212.000	.0022
213.000	-.1768
214.000	-.1587
215.000	-.1839
216.000	-.0379
221.000	-.1829
222.000	-.1487
223.000	-.1678
224.000	-.1668
225.000	-.1688
226.000	-.1658

OA163B MAIN GEAR STRUT (RFPW02)

BETA (1) = 5.030 ALPHA (2) = .000 Q(PSF) = 42.767 PO = 2120.6 RUN NO = 22.000

SECTION (1)MAIN LND GR STRT DEPENDENT VARIABLE CP

DUMMY 1.0000

TAP	
201.000	-.1358
202.000	-.1288
203.000	-.1015
204.000	-.1116
205.000	-.1368
206.000	-.1530
211.000	-.1318
212.000	-.0088
213.000	-.1318
214.000	-.0986
215.000	-.1338
216.000	-.0562
221.000	-.1278
222.000	-.1015
223.000	-.1328
224.000	-.1288
225.000	-.1338
226.000	-.1298

BETA (1) = 5.030 ALPHA (3) = 2.070 Q(PSF) = 42.767 PO = 2120.6 RUN NO = 22.000

SECTION (1)MAIN LND GR STRT DEPENDENT VARIABLE CP

DUMMY 1.0000

TAP	
201.000	-.0966
202.000	-.0784
203.000	-.0522
204.000	-.0431
205.000	-.0875
206.000	-.0855
211.000	-.0815
212.000	-.0017
213.000	-.0734
214.000	-.0532
215.000	-.0794
216.000	-.0562
221.000	-.0744
222.000	-.0683
223.000	-.0714
224.000	-.0704
225.000	-.0734
226.000	-.0744

OA163B MAIN GEAR STRUT (RFPW02)

BETA (11) = 5.030 ALPHA (4) = 4.120 Q(PSF) = 42.767 PO = 2120.6 RUN NO = 22.000

SECTION (1)MAIN LND GR STRT DEPENDENT VARIABLE CP

DUMMY 1.0000

TAP	
201.000	-.0444
202.000	-.0230
203.000	-.0109
204.000	.0378
205.000	-.0332
206.000	-.0230
211.000	-.0271
212.000	.0104
213.000	-.0241
214.000	-.0078
215.000	-.0393
216.000	-.0444
221.000	-.0210
222.000	-.0301
223.000	-.0159
224.000	-.0169
225.000	-.0180
226.000	-.0220

BETA (11) = 5.030 ALPHA (5) = 6.190 Q(PSF) = 42.767 PO = 2120.6 RUN NO = 22.000

SECTION (1)MAIN LND GR STRT DEPENDENT VARIABLE CP

DUMMY 1.0000

TAP	
201.000	.0042
202.000	.0325
203.000	.0315
204.000	.1141
205.000	.0204
206.000	.0224
211.000	.0224
212.000	.0284
213.000	.0244
214.000	.0335
215.000	.0083
216.000	-.0239
221.000	.0244
222.000	.0133
223.000	.0264
224.000	.0284
225.000	.0274
226.000	.0264

OA163B MAIN GEAR STRUT (RFPW02)

BETA (11) = 5.030 ALPHA (6) = 8.260 Q(PSF) = 42.767 PO = 2120.6 RUN NO = 22.000

SECTION (1)MAIN LND GR STRT DEPENDENT VARIABLE CP

DUMMY 1.0000

TAP	
201.000	.0516
202.000	.1151
203.000	.0766
204.000	.1836
205.000	.0768
206.000	.0637
211.000	.0657
212.000	.0496
213.000	.0667
214.000	.0828
215.000	.0506
216.000	-.0007
221.000	.0748
222.000	.0587
223.000	.0728
224.000	.0738
225.000	.0748
226.000	.0738

DATE 27 APR 77 OA163B PRESSURE DATA LISTING (RFPW03) (27 APR 77)

OA163B MAIN GEAR STRUT

REFERENCE DATA

SREF =	2690.0000 SQ.FT.	XMRP =	1076.7000 IN.	XO	
LREF =	474.8100 INCHES	YMRP =	.0000 IN.	YO	
BREF =	936.6800 INCHES	ZMRP =	375.0000 IN.	ZO	
SCALE =	.0405				

PARAMETRIC DATA

SPDBRK =	25.000	BDFLAP =	.000
ELV-L =	.000	ELV-R =	.000
PHI-N =	30.800	THETAN =	5.000
PHI-ML =	40.000	THETML =	6.200
PHI-MR =	40.000	THETMR =	6.200

BETA (1) = -5.030 ALPHA (1) = -2.080 Q(PSF) = 42.820 PO = 2117.7 RUN NO = 23.000

SECTION (1)MAIN LND GR STRT DEPENDENT VARIABLE CP

DUMMY 1.0000

TAP	
201.000	-.3093
202.000	-.3123
203.000	-.3113
204.000	-.3285
205.000	-.3254
206.000	-.3648
211.000	-.3103
212.000	-.0945
213.000	-.3144
214.000	-.3144
215.000	-.2901
216.000	-.0814
221.000	-.3123
222.000	-.3113
223.000	-.3113
224.000	-.3113
225.000	-.3113
226.000	-.3083

BETA (1) = -5.020 ALPHA (2) = -.010 Q(PSF) = 42.820 PO = 2117.7 RUN NO = 23.000

SECTION (1)MAIN LND GR STRT DEPENDENT VARIABLE CP

DUMMY 1.0000

TAP	
201.000	-.2596
202.000	-.2606
203.000	-.2546
204.000	-.2879
205.000	-.2717
206.000	-.3070
211.000	-.2576
212.000	-.0974
213.000	-.2627
214.000	-.2576
215.000	-.2506

OA163B MAIN GEAR STRUT (RFPW03)

BETA (1) = -5.020 ALPHA (2) = -.010

SECTION (1)MAIN LND GR STRT DEPENDENT VARIABLE CP

DUMMY 1.0000

TAP	
216.000	-.0994
221.000	-.2596
222.000	-.2566
223.000	-.2536
224.000	-.2556
225.000	-.2556
226.000	-.2506

BETA (1) = -5.030 ALPHA (3) = 2.060 Q(PSF) = 52.820 PO = 2117.7 RUN NO = 23.000

SECTION (1)MAIN LND GR STRT DEPENDENT VARIABLE CP

DUMMY 1.0000

TAP	
201.000	-.2043
202.000	-.2033
203.000	-.1942
204.000	-.2325
205.000	-.2124
206.000	-.2507
211.000	-.2023
212.000	-.0914
213.000	-.2053
214.000	-.2033
215.000	-.2043
216.000	-.1005
221.000	-.2083
222.000	-.2013
223.000	-.2013
224.000	-.2023
225.000	-.2033
226.000	-.2003

OA163B MAIN GEAR STRUT (RFPW)3)

BETA (1) = -5.030 ALPHA (4) = 4.110 Q(PSF) = 12.820 PO = 2117.7 RUN NO = 23.000

SECTION (1)MAIN LND GR STRT DEPENDENT VARIABLE CP

DUMMY 1.0000

TAP	
201.000	-.1539
202.000	-.1498
203.000	-.1347
204.000	-.1700
205.000	-.1599
206.000	-.1932
211.000	-.1508
212.000	-.0833
213.000	-.1508
214.000	-.1478
215.000	-.1569
216.000	-.0924
221.000	-.1569
222.000	-.1428
223.000	-.1458
224.000	-.1488
225.000	-.1488
226.000	-.1468

BETA (1) = -5.030 ALPHA (5) = 6.190 Q(PSF) = 12.820 PO = 2117.7 RUN NO = 23.000

SECTION (1)MAIN LND GR STRT DEPENDENT VARIABLE CP

DUMMY 1.0000

TAP	
201.000	-.1164
202.000	-.0902
203.000	-.0721
204.000	-.0983
205.000	-.0922
206.000	-.1294
211.000	-.0892
212.000	-.0671
213.000	-.0932
214.000	-.0812
215.000	-.0912
216.000	-.0802
221.000	-.0972
222.000	-.0741
223.000	-.0892
224.000	-.0872
225.000	-.0902
226.000	-.0882

OA163B MAIN GEAR STRUT (RFPW03)

BETA (1) = -5.030 ALPHA (6) = 8.260 Q(PSF) = 42.820 PO = 2117.7 RUN NO = 23.000

SECTION (1)MAIN LND GR STRT DEPENDENT VARIABLE CP

DUMMY 1.0000

TAP	
201.000	-.0371
202.000	-.0391
203.000	-.0219
204.000	-.0340
205.000	-.0340
206.000	-.0583
211.000	-.0330
212.000	-.0552
213.000	-.0391
214.000	-.0128
215.000	-.0360
216.000	-.0512
221.000	-.0330
222.000	-.0118
223.000	-.0371
224.000	-.0360
225.000	-.0401
226.000	-.0371

BETA (2) = -4.030 ALPHA (1) = -2.080 Q(PSF) = 42.867 PO = 2117.8 RUN NO = 24.000

SECTION (1)MAIN LND GR STRT DEPENDENT VARIABLE CP

DUMMY 1.0000

TAP	
201.000	-.2981
202.000	-.3001
203.000	-.2961
204.000	-.3253
205.000	-.3122
206.000	-.3514
211.000	-.3001
212.000	.0213
213.000	-.3012
214.000	-.3032
215.000	-.2760
216.000	-.0369
221.000	-.2991
222.000	-.2981
223.000	-.2951
224.000	-.2961
225.000	-.2971
226.000	-.2941

OA163B MAIN GEAR STRUT (RFPW03)

BETA (2) = -4.030 ALPHA (2) = .000 Q(PSF) = 42.867 PO = 2117.8 RUN NO = 24.000

SECTION (1)MAIN LND GR STRT DEPENDENT VARIABLE CP

DUMMY 1.0000

TAP	
201.000	-.2509
202.000	-.2489
203.000	-.2448
204.000	-.2852
205.000	-.2630
206.000	-.2993
211.000	-.2509
212.000	-.0007
213.000	-.2549
214.000	-.2509
215.000	-.2398
216.000	-.0733
221.000	-.2529
222.000	-.2479
223.000	-.2469
224.000	-.2479
225.000	-.2469
226.000	-.2418

BETA (2) = -4.030 ALPHA (3) = 2.050 Q(PSF) = 42.867 PO = 2117.8 RUN NO = 24.000

SECTION (1)MAIN LND GR STRT DEPENDENT VARIABLE CP

DUMMY 1.0000

TAP	
201.000	-.1971
202.000	-.1941
203.000	-.1840
204.000	-.2182
205.000	-.2051
206.000	-.2404
211.000	-.1961
212.000	-.0098
213.000	-.1981
214.000	-.1951
215.000	-.1941
216.000	-.0843
221.000	-.1991
222.000	-.1880
223.000	-.1890
224.000	-.1910
225.000	-.1910
226.000	-.1890

OA163B MAIN GEAR STRUT (RFPW03)

BETA (2) = -4.030 ALPHA (4) = 4.120 Q(PSF) = 42.867 PO = 2117.8 RUN NO = 24.000

SECTION (1)MAIN LND GR STRT DEPENDENT VARIABLE CP

DUMMY 1.0000

TAP	
201.000	-.1365
202.000	-.1365
203.000	-.1194
204.000	-.1506
205.000	-.1416
206.000	-.1718
211.000	-.1325
212.000	-.0118
213.000	-.1355
214.000	-.1305
215.000	-.1406
216.000	-.0782
221.000	-.1436
222.000	-.1215
223.000	-.1335
224.000	-.1335
225.000	-.1335
226.000	-.1335

BETA (2) = -4.040 ALPHA (5) = 6.190 Q(PSF) = 42.867 PO = 2117.8 RUN NO = 24.000

SECTION (1)MAIN LND GR STRT DEPENDENT VARIABLE CP

DUMMY 1.0000

TAP	
201.000	-.1004
202.000	-.0752
203.000	-.0611
204.000	-.0752
205.000	-.0812
206.000	-.1145
211.000	-.0782
212.000	-.0037
213.000	-.0792
214.000	-.0651
215.000	-.0822
216.000	-.0702
221.000	-.0853
222.000	-.0591
223.000	-.0782
224.000	-.0772
225.000	-.0742
226.000	-.0732

OA163B MAIN GEAR STRUT (RFPW03)

BETA (2) = -4.040 ALPHA (6) = 8.260 Q(PSF) = 42.867 PO = 2117.8 RUN NO = 24.000

SECTION (1)MAIN LND GR STRT DEPENDENT VARIABLE CP

DUMMY 1.0000

TAP	
201.000	-.0299
202.000	-.0218
203.000	-.0037
204.000	-.0128
205.000	-.0239
206.000	-.0520
211.000	-.0249
212.000	.0083
213.000	-.0208
214.000	.0022
215.000	-.0178
216.000	-.0500
221.000	-.0158
222.000	-.0027
223.000	-.0228
224.000	-.0208
225.000	-.0239
226.000	-.0178

BETA (3) = -2.960 ALPHA (1) = -2.060 Q(PSF) = 42.893 PO = 2117.8 RUN NO = 25.000

SECTION (1)MAIN LND GR STRT DEPENDENT VARIABLE CP

DUMMY 1.0000

TAP	
201.000	-.2935
202.000	-.2925
203.000	-.2825
204.000	-.3217
205.000	-.3016
206.000	-.3368
211.000	-.2905
212.000	-.0329
213.000	-.2895
214.000	-.2915
215.000	-.2633
216.000	-.0973
221.000	-.2895
222.000	-.2875
223.000	-.2825
224.000	-.2825
225.000	-.2865
226.000	-.2804

OA163B MAIN GEAR STRUT (RFPW03)

BETA (3) = -2.960 ALPHA (2) = .010 Q(PSF) = 42.893 PO = 2117.8 RUN NO = 25.000

SECTION (1)MAIN LND GR STRT DEPENDENT VARIABLE CP

DUMMY 1.0000

TAP	
201.000	-.2430
202.000	-.2379
203.000	-.2278
204.000	-.2662
205.000	-.2510
206.000	-.2864
211.000	-.2389
212.000	-.0471
213.000	-.2389
214.000	-.2379
215.000	-.2228
216.000	-.1178
221.000	-.2399
222.000	-.2308
223.000	-.2319
224.000	-.2329
225.000	-.2339
226.000	-.2319

BETA (3) = -2.960 ALPHA (3) = 2.050 Q(PSF) = 42.893 PO = 2117.8 RUN NO = 25.000

SECTION (1)MAIN LND GR STRT DEPENDENT VARIABLE CP

DUMMY 1.0000

TAP	
201.000	-.1877
202.000	-.1827
203.000	-.1696
204.000	-.2008
205.000	-.1958
206.000	-.2239
211.000	-.1847
212.000	-.0480
213.000	-.1827
214.000	-.1787
215.000	-.1837
216.000	-.1184
221.000	-.1877
222.000	-.1727
223.000	-.1757
224.000	-.1777
225.000	-.1787
226.000	-.1767

OA163B MAIN GEAR STRUT (RFPW03)

BETA (3) = -2.960 ALPHA (4) = 4.120 Q(PSF) = 42.893 PO = 2117.8 RUN NO = 25.000

SECTION (1)MAIN LND GR STRT DEPENDENT VARIABLE CP

DUMMY 1.0000

TAP	
201.000	-.1437
202.000	-.1225
203.000	-.1044
204.000	-.1376
205.000	-.1316
206.000	-.1598
211.000	-.1185
212.000	-.0450
213.000	-.1165
214.000	-.1104
215.000	-.1255
216.000	-.1014
221.000	-.1296
222.000	-.1074
223.000	-.1175
224.000	-.1155
225.000	-.1215
226.000	-.1195

BETA (3) = -2.960 ALPHA (5) = 6.200 Q(PSF) = 42.893 PO = 2117.8 RUN NO = 25.000

SECTION (1)MAIN LND GR STRT DEPENDENT VARIABLE CP

DUMMY 1.0000

TAP	
201.000	-.0799
202.000	-.0669
203.000	-.0448
204.000	-.0628
205.000	-.0729
206.000	-.1009
211.000	-.0709
212.000	-.0057
213.000	-.0709
214.000	-.0428
215.000	-.0729
216.000	-.0608
221.000	-.0739
222.000	-.0448
223.000	-.0719
224.000	-.0669
225.000	-.0719
226.000	-.0679

OA163B MAIN GEAR STRUT (RFPW03)

BETA (3) = -2.960 ALPHA (6) = 8.280 Q(PSF) = 42.893 PO = 2117.8 RUN NO = 25.000

SECTION (1)MAIN LND GR STRT DEPENDENT VARIABLE CP

DUMMY 1.0000

TAP	
201.000	-.0208
202.000	-.0118
203.000	.0073
204.000	.0083
205.000	-.0138
206.000	-.0359
211.000	-.0138
212.000	.0022
213.000	-.0057
214.000	.0133
215.000	-.0047
216.000	-.0440
221.000	-.0017
222.000	.0083
223.000	-.0118
224.000	-.0057
225.000	-.0077
226.000	-.0047

BETA (4) = -2.030 ALPHA (1) = -2.060 Q(PSF) = 42.872 PO = 2117.8 RUN NO = 26.000

SECTION (1)MAIN LND GR STRT DEPENDENT VARIABLE CP

DUMMY 1.0000

TAP	
201.000	-.2789
202.000	-.2769
203.000	-.2659
204.000	-.3030
205.000	-.2880
206.000	-.3221
211.000	-.2779
212.000	-.0429
213.000	-.2769
214.000	-.2769
215.000	-.2528
216.000	-.0961
221.000	-.2789
222.000	-.2709
223.000	-.2689
224.000	-.2709
225.000	-.2699
226.000	-.2659

OA163B MAIN GEAR STRUT (RFPW03)

BETA (4) = -2.020 ALPHA (2) = .020 Q(PSF) = 42.872 PO = 2117.8 RUN NO = 26.000

SECTION (1)MAIN LND GR STRT DEPENDENT VARIABLE CP

DUMMY 1.0000

TAP	
201.000	-.2356
202.000	-.2275
203.000	-.2124
204.000	-.2507
205.000	-.2386
206.000	-.2709
211.000	-.2265
212.000	-.0561
213.000	-.2265
214.000	-.2266
215.000	-.2154
216. 00	-.1166
221.000	-.2285
222.000	-.2174
223.000	-.2184
224.000	-.2194
225.000	-.2215
226.000	-.2184

BETA (4) = -2.030 ALPHA (3) = 2.070 Q(PSF) = 42.872 PO = 2117.8 RUN NO = 26.000

SECTION (1)MAIN LND GR STRT DEPENDENT VARIABLE CP

DUMMY 1.0000

TAP	
201.000	-.1674
202.000	-.1674
203.000	-.1533
204.000	-.1875
205.000	-.1844
206.000	-.2116
211.000	-.1704
212.000	-.0579
213.000	-.1704
214.000	-.1654
215.000	-.1734
216.000	-.1172
221.000	-.1754
222.000	-.1573
223.000	-.1634
224.000	-.1624
225.000	-.1634
226.000	-.1644

OA163B MAIN GEAR STRUT (RFPW03)

BETA (4) = -2.020 ALPHA (4) = 4.120 Q(PSF) = 42.872 PO = 2117.8 RUN NO = 26.000

SECTION (1)MAIN LND GR STRT DEPENDENT VARIABLE CP

DUMMY 1.0000

TAP	
201.000	-.1335
202.000	-.1074
203.000	-.0913
204.000	-.1124
205.000	-.1184
206.000	-.1486
211.000	-.1074
212.000	-.0470
213.000	-.1134
214.000	-.1013
215.000	-.1144
216.000	-.1053
221.000	-.1174
222.000	-.0902
223.000	-.1084
224.000	-.1063
225.000	-.1094
226.000	-.1074

BETA (4) = -2.020 ALPHA (5) = 6.200 Q(PSF) = 42.872 PO = 2117.8 RUN NO = 26.000

SECTION (1)MAIN LND GR STRT DEPENDENT VARIABLE CP

DUMMY 1.0000

TAP	
201.000	-.0684
202.000	-.0522
203.000	-.0381
204.000	-.0502
205.000	-.0623
206.000	-.0865
211.000	-.0593
212.000	-.0360
213.000	-.0603
214.000	-.0320
215.000	-.0593
216.000	-.0855
221.000	-.0502
222.000	-.0371
223.000	-.0603
224.000	-.0583
225.000	-.0613
226.000	-.0573

OA163B MAIN GEAR STRUT (RFPH03)

BETA (4) = -2.020 ALPHA (6) = 8.270 Q(PSF) = 42.872 PO = 2117.8 RUN NO = 26.000

SECTION (1)MAIN LND GR STRT DEPENDENT VARIABLE CP

DUMMY 1.0000

TAP	
201.000	-.0118
202.000	-.0037
203.000	.0173
204.000	.0264
205.000	-.0057
206.000	-.0178
211.000	.0002
212.000	-.0208
213.000	.0052
214.000	.0244
215.000	.0042
216.000	-.0581
221.000	.0073
222.000	.0143
223.000	.0063
224.000	.0042
225.000	.0083
226.000	.0063

BETA (5) = -1.030 ALPHA (1) = -2.060 Q(PSF) = 42.872 PO = 2117.8 RUN NO = 27.000

SECTION (1)MAIN LND GR STRT DEPENDENT VARIABLE CP

DUMMY 1.0000

TAP	
201.000	-.2717
202.000	-.2657
203.000	-.2527
204.000	-.2968
205.000	-.2768
206.000	-.3079
211.000	-.2637
212.000	-.0629
213.000	-.2657
214.000	-.2657
215.000	-.2456
216.000	-.1061
221.000	-.2687
222.000	-.2557
223.000	-.2567
224.000	-.2567
225.000	-.2577
226.000	-.2547

OA163B MAIN GEAR STRUT (RFPH03)

BETA (5) = -1.030 ALPHA (2) = .000 Q(PSF) = 42.872 PO = 2117.8 RUN NO = 27.000

SECTION (1)MAIN LND GR STRT DEPENDENT VARIABLE CP

DUMMY 1.0000

TAP	
201.000	-.2151
202.000	-.2051
203.000	-.1910
204.000	-.2282
205.000	-.2222
206.000	-.2524
211.000	-.2121
212.000	-.0702
213.000	-.2091
214.000	-.2041
215.000	-.2101
216.000	-.1225
221.000	-.2162
222.000	-.1990
223.000	-.2021
224.000	-.2031
225.000	-.2021
226.000	-.2011

BETA (5) = -1.030 ALPHA (3) = 2.060 Q(PSF) = 42.872 PO = 2117.8 RUN NO = 27.000

SECTION (1)MAIN LND GR STRT DEPENDENT VARIABLE CP

DUMMY 1.0000

TAP	
201.000	-.1586
202.000	-.1526
203.000	-.1345
204.000	-.1676
205.000	-.1656
206.000	-.1938
211.000	-.1485
212.000	-.0540
213.000	-.1576
214.000	-.1505
215.000	-.1576
216.000	-.1204
221.000	-.1606
222.000	-.1355
223.000	-.1475
224.000	-.1475
225.000	-.1495
226.000	-.1465

OA163B MAIN GEAR STRUT (RFPW03)

BETA (5) = -1.030 ALPHA (4) = 4.120 Q(PSF) = 42.872 PO = 2117.8 RUN NO = 27.000

SECTION (1)MAIN LND GR STRT DEPENDENT VARIABLE CP

DUMMY 1.0000

TAP	
201.000	-.1176
202.000	-.1005
203.000	-.0763
204.000	-.0975
205.000	-.1076
206.000	-.1368
211.000	-.1025
212.000	-.0511
213.000	-.1005
214.000	-.0834
215.000	-.1076
216.000	-.1096
221.000	-.1055
222.000	-.0733
223.000	-.0995
224.000	-.0975
225.000	-.0985
226.000	-.0965

BETA (5) = -1.030 ALPHA (5) = 6.190 Q(PSF) = 42.872 PO = 2117.8 RUN NO = 27.000

SECTION (1)MAIN LND GR STRT DEPENDENT VARIABLE CP

DUMMY 1.0000

TAP	
201.000	-.0563
202.000	-.0462
203.000	-.0280
204.000	-.0270
205.000	-.0502
206.000	-.0724
211.000	-.0492
212.000	-.0381
213.000	-.0462
214.000	-.0189
215.000	-.0421
216.000	-.0876
221.000	-.0381
222.000	-.0290
223.000	-.0482
224.000	-.0441
225.000	-.0441
226.000	-.0421

OA163B MAIN GEAR STRUT (RFPW03)

BETA (5) = -1.030 ALPHA (6) = 8.280 Q(PSF) = 42.872 PO = 2117.8 RUN NO = 27.000

SECTION (1)MAIN LND GR STRT DEPENDENT VARIABLE CP

DUMMY 1.0000

TAP	
201.000	-.0037
202.000	.0113
203.000	.0304
204.000	.0505
205.000	.0052
206.000	.0052
211.000	.0133
212.000	-.0208
213.000	.0193
214.000	.0314
215.000	.0123
216.000	-.0600
221.000	.0203
222.000	.0163
223.000	.0203
224.000	.0233
225.000	.0193
226.000	.0193

BETA (6) = .030 ALPHA (1) = .000 Q(PSF) = 42.985 PO = 2117.8 RUN NO = 28.000

SECTION (1)MAIN LND GR STRT DEPENDENT VARIABLE CP

DUMMY 1.0000

TAP	
201.000	-.1948
202.000	-.1948
203.000	-.1788
204.000	-.2108
205.000	-.2108
206.000	-.2408
211.000	-.1988
212.000	-.0367
213.000	-.1958
214.000	-.1928
215.000	-.2008
216.000	-.082[illegible]
221.000	-.2018
222.000	-.1798
223.000	-.1888
224.000	-.1888
225.000	-.1898
226.000	-.1898

DATE 27 APR 77 OA163B PRESSURE DATA LISTING (RFPW03)

OA163B MAIN GEAR STRUT

BETA (6) = .030 ALPHA (2) = 2.070 Q(PSF) = 42.985 PO = 2117.8 RUN NO = 28.000

SECTION (1)MAIN LND GR STRT DEPENDENT VARIABLE CP

DUMMY 1.0000

TAP	
201.000	-.1550
202.000	-.1400
203.000	-.1200
204.000	-.1440
205.000	-.1540
206.000	-.1811
211.000	-.1400
212.000	-.0458
213.000	-.1430
214.000	-.1360
215.000	-.1480
216.000	-.0939
221.000	-.1460
222.000	-.1220
223.000	-.1360
224.000	-.1360
225.000	-.1370
226.000	-.1360

BETA (6) = .030 ALPHA (3) = 4.130 Q(PSF) = 42.985 PO = 2117.8 RUN NO = 28.000

SECTION (1)MAIN LND GR STRT DEPENDENT VARIABLE CP

DUMMY 1.0000

TAP	
201.000	-.0982
202.000	-.0902
203.000	-.0691
204.000	-.0821
205.000	-.0992
206.000	-.1194
211.000	-.0922
212.000	-.0389
213.000	-.0932
214.000	-.0580
215.000	-.0942
216.000	-.0872
221.000	-.0852
222.000	-.0651
223.000	-.0932
224.000	-.0882
225.000	-.0892
226.000	-.0872

OA163B MAIN GEAR STRUT (RFPW03)

BETA (6) = .030 ALPHA (4) = 6.210 Q(PSF) = 42.985 PO = 2117.8 RUN NO = 28.000

SECTION (1)MAIN LND GR STRT DEPENDENT VARIABLE CP

DUMMY 1.0000

TAP	
201.000	-.0450
202.000	-.0350
203.000	-.0118
204.000	-.0088
205.000	-.0410
206.000	-.0531
211.000	-.0370
212.000	-.0269
213.000	-.0269
214.000	-.0088
215.000	-.0289
216.000	-.0712
221.000	-.0249
222.000	-.0198
223.000	-.0279
224.000	-.0269
225.000	-.0289
226.000	-.0299

BETA (7) = .960 ALPHA (1) = .000 Q(PSF) = 42.767 PO = 2117.2 RUN NO = 29.000

SECTION (1)MAIN LND GR STRT DEPENDENT VARIABLE CP

DUMMY 1.0000

TAP	
201.000	-.1795
202.000	-.1745
203.000	-.1625
204.000	-.1896
205.000	-.1956
206.000	-.2207
211.000	-.1785
212.000	-.1193
213.000	-.1805
214.000	-.1775
215.000	-.1846
216.000	-.0967
221.000	-.1856
222.000	-.1645
223.000	-.1725
224.000	-.1705
225.000	-.1725
226.000	-.1715

DATE 27 APR 77 OA163B PRESSURE DATA LISTING

OA163B MAIN GEAR STRUT (RFPN03)

BETA (7) = .960 ALPHA (2) = 2.070 Q(PSF) = 42.767 PO = 2117.2 RUN NO = 29.000

SECTION (1)MAIN LND GR STRT DEPENDENT VARIABLE CP

DUMMY 1.0000

TAP	
201.000	-.1415
202.000	-.1273
203.000	-.1050
204.000	-.1243
205.000	-.1425
206.000	-.1688
211.000	-.1303
212.000	-.1101
213.000	-.1324
214.000	-.1131
215.000	-.1405
216.000	-.0959
221.000	-.1364
222.000	-.1050
223.000	-.1253
224.000	-.1263
225.000	-.1273
226.000	-.1263

BETA (7) = .960 ALPHA (3) = 4.130 Q(PSF) = 42.767 PO = 2117.2 RUN NO = 29.000

SECTION (1)MAIN LND GR STRT DEPENDENT VARIABLE CP

DUMMY 1.0000

TAP	
201.000	-.0863
202.000	-.0762
203.000	-.0531
204.000	-.0621
205.000	-.0833
206.000	-.1054
211.000	-.0792
212.000	-.0923
213.000	-.0782
214.000	-.0480
215.000	-.0762
216.000	-.0833
221.000	-.0722
222.000	-.0541
223.000	-.0792
224.000	-.0762
225.000	-.0792
226.000	-.0782

OA163B MAIN GEAR STRUT (RFPW03)

BETA (7) = .969 ALPHA (4) = 6.200 Q(PSF) = 42.767 PO = 2117.2 RUN NO = 29.000

SECTION (1)MAIN LND GR STRT DEPENDENT VARIABLE CP

DUMMY 1.0000

TAP	
201.000	-.0361
202.000	-.0250
203.000	-.0017
204.000	.0184
205.000	-.0301
206.000	-.0351
211.000	-.0220
212.000	-.0716
213.000	-.0159
214.000	-.0017
215.000	-.0179
216.000	-.0625
221.000	-.0128
222.000	-.0149
223.000	-.0128
224.000	-.0149
225.000	-.0139
226.000	-.0149

BETA (8) = 1.950 ALPHA (1) = .000 Q(PSF) = 42.910 PO = 2117.1 RUN NO = 30.000

SECTION (1)MAIN LND GR STRT DEPENDENT VARIABLE CP

DUMMY 1.0000

TAP	
201.000	-.1751
202.000	-.1641
203.000	-.1440
204.000	-.1691
205.000	-.1821
206.000	-.2041
211.000	-.1631
212.000	-.0729
213.000	-.1671
214.000	-.1590
215.000	-.1731
216.000	-.0719
221.000	-.1701
222.000	-.1440
223.000	-.1580
224.000	-.1560
225.000	-.1570
226.000	-.1570

DATE 27 APR 77 OA163B PRESSURE DATA LISTING (RFPW03)

OA163B MAIN GEAR STRUT

BETA (8) = 1.940 ALPHA (2) = 2.060 Q(PSF) = 42.910 PO = 2117.1 RUN NO = 30.000

SECTION (1)MAIN LND GR STRT DEPENDENT VARIABLE CP

DUMMY 1.0000

TAP	
201.000	-.1256
202.000	-.1196
203.000	-.0944
204.000	-.1095
205.000	-.1297
206.000	-.1488
211.000	-.1216
212.000	-.0712
213.000	-.1246
214.000	-.0863
215.000	-.1266
216.000	-.0853
221.000	-.1125
222.000	-.0884
223.000	-.1196
224.000	-.1145
225.000	-.1186
226.000	-.1125

BETA (8) = 1.940 ALPHA (3) = 4.140 Q(PSF) = 42.910 PO = 2117.1 RUN NO = 30.000

SECTION (1)MAIN LND GR STRT DEPENDENT VARIABLE CP

DUMMY 1.0000

TAP	
201.000	-.0776
202.000	-.0634
203.000	-.0381
204.000	-.0422
205.000	-.0736
206.000	-.0877
211.000	-.0685
212.000	-.0584
213.000	-.0604
214.000	-.0371
215.000	-.0614
216.000	-.0705
221.000	-.0564
222.000	-.0462
223.000	-.0624
224.000	-.0594
225.000	-.0634
226.000	-.0645

OA163B MAIN GEAR STRUT (RFPW03)

BETA (8) = 1.940 ALPHA (4) = 6.200 Q(PSF) = 42.910 PO = 2117.1 RUN NO = 30.000

SECTION (1)MAIN LND GR STRT DEPENDENT VARIABLE CP

DUMMY 1.0000

TAP	
201.000	-.0237
202.000	-.0077
203.000	.0082
204.000	.0403
205.000	-.0167
206.000	-.0147
211.000	-.0067
212.000	-.0368
213.000	-.0037
214.000	.0082
215.000	-.0127
216.000	-.0488
221.000	-.0007
222.000	-.0087
223.000	-.0007
224.000	-.0007
225.000	-.0007
226.000	.0092

BETA (9) = 5.000 ALPHA (1) = .000 Q(PSF) = 42.885 PO = 2117.2 RUN NO = 31.000

SECTION (1)MAIN LND GR STRT DEPENDENT VARIABLE CP

DUMMY 1.0000

TAP	
201.000	-.1336
202.000	-.1276
203.000	-.0967
204.000	-.1117
205.000	-.1346
206.000	-.1606
211.000	-.1306
212.000	-.0397
213.000	-.1276
214.000	-.0987
215.000	-.1276
216.000	-.0627
221.000	-.1266
222.000	-.1007
223.000	-.1296
224.000	-.1256
225.000	-.1336
226.000	-.1276

OA163B MAIN GEAR STRU (RFPW03)

BETA (9) = 5.000 ALPHA (2) = 2.080 Q(PSF) = 42.885 PO = 2117.2 RUN NO = 31.000

SECTION (1)MAIN LND GR STRT DEPENDENT VARIABLE CP

DUMMY 1.0000

TAP	
201.000	-.0874
202.000	-.0732
203.000	-.0511
204.000	-.0339
205.000	-.0803
206.000	-.0803
211.000	-.0743
212.000	-.0360
213.000	-.0672
214.000	-.0511
215.000	-.0743
216.000	-.0622
221.000	-.0692
222.000	-.0682
223.000	-.0652
224.000	-.0642
225.000	-.0672
226.000	-.0702

BETA (9) = 4.990 ALPHA (3) = 4.130 Q(PSF) = 42.385 PO = 2117.2 RUN NO = 31.000

SECTION (1)MAIN LND GR STRT DEPENDENT VARIABLE CP

DUMMY 1.0000

TAP	
201.000	-.0370
202.000	-.0128
203.000	-.0088
204.000	.0476
205.000	-.0209
206.000	-.0229
211.000	-.0179
212.000	-.0199
213.000	-.0148
214.000	-.0068
215.000	-.0300
216.000	-.0501
221.000	-.0098
222.000	-.0239
223.000	-.0108
224.000	-.0128
225.000	-.0118
226.000	-.0128

OA163B MAIN GEAR STRUT (RFPW03)

BETA (9) = 4.990 ALPHA (4) = 6.220 Q(PSF) = 42.885 PO = 2117.2 RUN NO = 31.000

SECTION (1)MAIN LND GR STRT DEPENDENT VARIABLE CP

DUMMY 1.0000

TAP	
201.000	.0053
202.000	.0537
203.000	.0355
204.000	.1274
205.000	.0355
206.000	.0174
211.000	.0244
212.000	-.0027
213.000	.0244
214.000	.0376
215.000	.0063
216.000	-.0320
221.000	.0305
222.000	.0143
223.000	.0295
224.000	.0325
225.000	.0315
226.000	.0295

OA1638 MAIN GEAR STRUT (RFPW04) (27 APR 77)

REFERENCE DATA

SREF =	2690.0000 SQ.FT.	XMRP =	1076.7000 IN. XO		
LREF =	474.8100 INCHES	YMRP =	.0000 IN. YO		
BREF =	936.6800 INCHES	ZMRP =	375.0000 IN. ZO		
SCALE =	.0405				

PARAMETRIC DATA

SPDBRK =	25.000	BDFLAP =	.000
ELV-L =	.000	ELV-R =	.000
PHI-N =	25.000	THETAN =	5.000
PHI-ML =	26.000	THETML =	4.000
PHI-MR =	26.000	THETMR =	4.000

BETA (1) = -5.030 ALPHA (1) = .000 Q(PSF) = 42.797 PO = 2115.0 RUN NO = 32.000

SECTION (1)MAIN LND GR STRT DEPENDENT VARIABLE CP

DUMMY 1.0000

TAP	
201.000	-.2643
202.000	-.2451
203.000	-.2512
204.000	-.2643
205.000	-.2562
206.000	-.2844
211.000	-.2502
212.000	-.0480
213.000	-.2522
214.000	-.2532
215.000	-.2371
216.000	-.0741
221.000	-.2512
222.000	-.2492
223.000	-.2522
224.000	-.2522
225.000	-.2522
226.000	-.2492

BETA (1) = -5.030 ALPHA (2) = 2.070 Q(PSF) = 42.797 PO = 2115.0 RUN NO = 32.000

SECTION (1)MAIN LND GR STRT DEPENDENT VARIABLE CP

DUMMY 1.0000

TAP	
201.000	-.2176
202.000	-.1964
203.000	-.1923
204.000	-.2176
205.000	-.2045
206.000	-.2327
211.000	-.1994
212.000	-.0562
213.000	-.2024
214.000	-.1984
215.000	-.1964

OA163B MAIN GEAR STRUT (RFPW04)

BETA (1) = -5.030 ALPHA (2) = 2.070

SECTION (1)MAIN LND GR STRT DEPENDENT VARIABLE CP

DUMMY 1.0000

TAP	
216.000	-.0874
221.000	-.2004
222.000	-.1944
223.000	-.2004
224.000	-.2004
225.000	-.2023
226.000	-.1994

BETA (1) = -5.030 ALPHA (3) = 4.130 Q(PSF) = 42.797 PO = 2115.0 RUN NO = 32.000

SECTION (1)MAIN LND GR STRT DEPENDENT VARIABLE CP

DUMMY 1.0000

TAP	
201.000	-.1633
202.000	-.1421
203.000	-.1360
204.000	-.1603
205.000	-.1472
206.000	-.1815
211.000	-.1461
212.000	-.0552
213.000	-.1492
214.000	-.1451
215.000	-.1451
216.000	-.0866
221.000	-.1502
222.000	-.1381
223.000	-.1472
224.000	-.1482
225.000	-.1492
226.000	-.1461

OA163B MAIN GEAR STRUT (RFPW04)

BETA (1) = -5.030 ALPHA (4) = 6.210 Q(PSF) = 42.797 PO = 2115.0 RUN NO = 32.000

SECTION (1)MAIN LND GR STRT DEPENDENT VARIABLE CP

DUMMY 1.0000

TAP	
201.000	-.1127
202.000	-.0834
203.000	-.0784
204.000	-.0935
205.000	-.0915
206.000	-.1208
211.000	-.0895
212.000	-.0461
213.000	-.0925
214.000	-.0855
215.000	-.0895
216.000	-.0774
221.000	-.0956
222.000	-.0764
223.000	-.0905
224.000	-.0925
225.000	-.0935
226.000	-.0895

BETA (2) = -2.000 ALPHA (1) = .000 Q(PSF) = 42.802 PO = 2115.0 RUN NO = 33.000

SECTION (1)MAIN LND GR STRT DEPENDENT VARIABLE CP

DUMMY 1.0000

TAP	
201.000	-.2058
202.000	-.2169
203.000	-.2159
204.000	-.2370
205.000	-.2289
206.000	-.2581
211.000	-.2219
212.000	-.0459
213.000	-.2219
214.000	-.2229
215.000	-.2209
216.000	-.0892
221.000	-.2239
222.000	-.2159
223.000	-.2219
224.000	-.2209
225.000	-.2199
226.000	-.2159

OA163B MAIN GEAR STRUT (RFPW04)

BETA (2) = -2.010 ALPHA (2) = 2.050 Q(PSF) = 42.802 PO = 2115.0 RUN NO = 33.000

SECTION (1)MAIN LND GR STRT DEPENDENT VARIABLE CP

DUMMY 1.0000

TAP	
201.000	-.1578
202.000	-.1628
203.000	-.1558
204.000	-.1840
205.000	-.1739
206.000	-.2051
211.000	-.1679
212.000	-.0560
213.000	-.1689
214.000	-.1648
215.000	-.1668
216.000	-.0954
221.000	-.1689
222.000	-.1588
223.000	-.1668
224.000	-.1648
225.000	-.1699
226.000	-.1638

BETA (2) = -2.010 ALPHA (3) = 4.120 Q(PSF) = 42.802 PO = 2115.0 RUN NO = 33.000

SECTION (1)MAIN LND GR STRT DEPENDENT VARIABLE CP

DUMMY 1.0000

TAP	
201.000	-.1381
202.000	-.1088
203.000	-.1007
204.000	-.1159
205.000	-.1159
206.000	-.1391
211.000	-.1088
212.000	-.0452
213.000	-.1179
214.000	-.1058
215.000	-.1159
216.000	-.0906
221.000	-.1169
222.000	-.0987
223.000	-.1129
224.000	-.1118
225.000	-.1118
226.000	-.1108

OA163B MAIN GEAR STRUT (RFPW04)

BETA (2) = -2.010 ALPHA (4) = 6.220 Q(PSF) = 42.802 PO = 2115.0 RUN NO = 33.000

SECTION (1)MAIN LND GR STRT DEPENDENT VARIABLE CP

DUMMY 1.0000

TAP	
201.000	-.0734
202.000	-.0654
203.000	-.0441
204.000	-.0502
205.000	-.0664
206.000	-.0886
211.000	-.0684
212.000	-.0351
213.000	-.0644
214.000	-.0431
215.000	-.0603
216.000	-.0755
221.000	-.0644
222.000	-.0441
223.000	-.0664
224.000	-.0664
225.000	-.0674
226.000	-.0654

BETA (3) = -1.010 ALPHA (1) = .020 Q(PSF) = 42.885 PO = 2115.0 RUN NO = 34.000

SECTION (1)MAIN LND GR STRT DEPENDENT VARIABLE CP

DUMMY 1.0000

TAP	
201.000	-.1945
202.000	-.2046
203.000	-.1985
204.000	-.2277
205.000	-.2156
206.000	-.2457
211.000	-.2086
212.000	-.0379
213.000	-.2096
214.000	-.2046
215.000	-.2086
216.000	-.0820
221.000	-.2086
222.000	-.1996
223.000	-.2046
224.000	-.2066
225.000	-.2076
226.000	-.2026

OA163B MAIN GEAR STRUT (RFPW04)

BETA (3) = -1.010 ALPHA (2) = 2.060 Q(PSF) = 42.885 PO = 2115.0 RUN NO = 34.000

SECTION (1)MAIN LND GR STRT DEPENDENT VARIABLE CP

DUMMY 1.0000

TAP	
201.000	-.1571
202.000	-.1530
203.000	-.1470
204.000	-.1722
205.000	-.1662
206.000	-.1934
211.000	-.1561
212.000	-.0461
213.000	-.1601
214.000	-.1530
215.000	-.1571
216.000	-.0915
221.000	-.1591
222.000	-.1480
223.000	-.1571
224.000	-.1571
225.000	-.1591
226.000	-.1541

BETA (3) = -1.010 ALPHA (3) = 4.130 Q(PSF) = 42.885 PO = 2115.0 RUN NO = 34.000

SECTION (1)MAIN LND GR STRT DEPENDENT VARIABLE CP

DUMMY 1.0000

TAP	
201.000	-.1246
202.000	-.1024
203.000	-.0893
204.000	-.0964
205.000	-.1105
206.000	-.1296
211.000	-.1035
212.000	-.0410
213.000	-.1095
214.000	-.0954
215.000	-.1105
216.000	-.0853
221.000	-.1115
222.000	-.0893
223.000	-.1035
224.000	-.1035
225.000	-.1055
226.000	-.0984

OA163B MAIN GEAR STRJT (RFPW04)

BETA (3) = -1.010 ALPHA (4) = 6.200 Q(PSF) = 42.885 PO = 2115.0 RUN NO = 34.000

SECTION (1)MAIN LND GR STRT DEPENDENT VARIABLE CP

DUMMY 1.0000

TAP	
201.000	-.0630
202.000	-.0529
203.000	-.0349
204.000	-.0399
205.000	-.0580
206.000	-.0781
211.000	-.0590
212.000	-.0308
213.000	-.0560
214.000	-.0339
215.000	-.0529
216.000	-.0710
221.000	-.0529
222.000	-.0349
223.000	-.0580
224.000	-.0590
225.000	-.0600
226.000	-.0529

BETA (4) = .010 ALPHA (1) = .000 Q(PSF) = 42.850 PO = 2115.0 RUN NO = 35.000

SECTION (1)MAIN LND GR STRT DEPENDENT VARIABLE CP

DUMMY 1.0000

TAP	
201.000	-.1815
202.000	-.1916
203.000	-.1845
204.000	-.2117
205.000	-.2016
206.000	-.2327
211.000	-.1956
212.000	-.0389
213.000	-.1976
214.000	-.1916
215.000	-.1966
216.000	-.0821
221.000	-.1976
222.000	-.1855
223.000	-.1926
224.000	-.1946
225.000	-.1956
226.000	-.1916

OA163B MAIN GEAR STRUT (RFPW04)

BETA (4) = .010 ALPHA (2) = 2.070 Q(PSF) = 42.850 PO = 2115.0 RUN NO = 35.000

SECTION (1)MAIN LND GR STRT DEPENDENT VARIABLE CP

DUMMY 1.0000

TAP	
201.000	-.1569
202.000	-.1408
203.000	-.1297
204.000	-.1489
205.000	-.1499
206.000	-.1741
211.000	-.1398
212.000	-.0440
213.000	-.1509
214.000	-.1408
215.000	-.1479
216.000	-.0934
221.000	-.1499
222.000	-.1327
223.000	-.1408
224.000	-.1428
225.000	-.1438
226.000	-.1398

BETA (4) = .010 ALPHA (3) = 4.130 Q(PSF) = 42.850 PO = 2115.0 RUN NO = 35.000

SECTION (1)MAIN LND GR STRT DEPENDENT VARIABLE CP

DUMMY 1.0000

TAP	
201.000	-.1076
202.000	-.0945
203.000	-.0763
204.000	-.0804
205.000	-.0995
206.000	-.1157
211.000	-.0955
212.000	-.0380
213.000	-.0965
214.000	-.0743
215.000	-.0995
216.000	-.0854
221.000	-.0995
222.000	-.0743
223.000	-.0955
224.000	-.0935
225.000	-.0955
226.000	-.0925

DATE 27 APR 77 0A163B PRESSURE DATA LISTING (RFPW04)

0A1636 MAIN GEAR STRUT

BETA (4) = .010 ALPHA (4) = 6.200 Q(PSF) = 42.850 PO = 2115.0 RUN NO = 35.000

SECTION (1)MAIN LND GR STRT DEPENDENT VARIABLE CP

DUMMY 1.0000

TAP	
201.000	-.0511
202.000	-.0370
203.000	-.0269
204.000	-.0259
205.000	-.0440
206.000	-.0622
211.000	-.0471
212.000	-.0279
213.000	-.0420
214.000	-.0219
215.000	-.0410
216.000	-.0672
221.000	-.0410
222.000	-.0259
223.000	-.0461
224.000	-.0471
225.000	-.0481
226.000	-.0400

BETA (5) = 1.000 ALPHA (1) = .000 Q(PSF) = 42.797 PO = 2115.0 RUN NO = 36.000

SECTION (1)MAIN LND GR STRT DEPENDENT VARIABLE CP

DUMMY 1.0000

TAP	
201.000	-.1728
202.000	-.1768
203.000	-.1688
204.000	-.1939
205.000	-.1899
206.000	-.2150
211.000	-.1798
212.000	-.0389
213.000	-.1838
214.000	-.1788
215.000	-.1808
216.000	-.0872
221.000	-.1849
222.000	-.1718
223.000	-.1788
224.000	-.1788
225.000	-.1798
226.000	-.1758

OA163B MAIN GEAR STRUT (RFPW04)

BETA (5) = 1.000 ALPHA (2) = 2.050 Q(PSF) = 42.797 PO = 2115.0 RUN NO = 36.000

SECTION (1)MAIN LND GR STRT DEPENDENT VARIABLE CP

DUMMY 1.0000

TAP	
201.000	-.1459
202.000	-.1278
203.000	-.1177
204.000	-.1267
205.000	-.1378
206.000	-.1590
211.000	-.1278
212.000	-.0441
213.000	-.1328
214.000	-.1237
215.000	-.1388
216.000	-.0945
221.000	-.1378
222.000	-.1446
223.000	-.1288
224.000	-.1288
225.000	-.1288
226.000	-.1257

BETA (5) = 1.010 ALPHA (3) = 4.140 Q(PSF) = 42.797 PO = 2115.0 RUN NO = 36.000

SECTION (1)MAIN LND GR STRT DEPENDENT VARIABLE CP

DUMMY 1.0000

TAP	
201.000	-.0956
202.000	-.0865
203.000	-.0633
204.000	-.0693
205.000	-.0885
206.000	-.1046
211.000	-.0895
212.000	-.0390
213.000	-.0875
214.000	-.0602
215.000	-.0885
216.000	-.0865
221.000	-.0855
222.000	-.0633
223.000	-.0865
224.000	-.0865
225.000	-.0875
226.000	-.0824

DATE 27 APR 77 OA163B PRESSURE DATA LISTING

OA163B MAIN GEAR STRUT (RFPWD+)

BETA (5) = 1.000 ALPHA (4) = 6.190 Q(PSF) = 42.797 PO = 2115.0 RUN NO = 36.000

SECTION (1)MAIN LND GR STRT DEPENDENT VARIABLE CP

DUMMY 1.0000

TAP	
201.000	-.0431
202.000	-.0239
203.000	-.0179
204.000	-.0108
205.000	-.0340
206.000	-.0492
211.000	-.0381
212.000	-.0280
213.000	-.0320
214.000	-.0118
215.000	-.0300
216.000	-.0684
221.000	-.0300
222.000	-.0138
223.000	-.0340
224.000	-.0340
225.000	-.0340
226.000	-.0310

BETA (6) = 1.990 ALPHA (1) = .020 Q(PSF) = 42.885 PO = 2115.0 RUN NO = 37.000

SECTION (1)MAIN LND GR STRT DEPENDENT VARIABLE CP

DUMMY 1.0000

TAP	
201.000	-.1656
202.000	-.1636
203.000	-.1556
204.000	-.1737
205.000	-.1767
206.000	-.1998
211.000	-.1646
212.000	-.0389
213.000	-.1717
214.000	-.1656
215.000	-.1717
216.000	-.0842
221.000	-.1707
222.000	-.1556
223.000	-.1656
224.000	-.1646
225.000	-.1656
226.000	-.1616

DATE 27 APR 77 OA163B PRESSURE DATA LISTING (RFPW04)

OA163B MAIN GEAR STRUT

BETA (6) = 1.980 ALPHA (2) = 2.050 Q(PSF) = 42.885 PO = 2115.0 RUN NO = 37.000

SECTION (1)MAIN LND GR STRT DEPENDENT VARIABLE CP

DUMMY 1.0000

TAP	
201.000	-.1355
202.000	-.1174
203.000	-.1003
204.000	-.1114
205.000	-.1275
206.000	-.1466
211.000	-.1204
212.000	-.0440
213.000	-.1244
214.000	-.1053
215.000	-.1275
216.000	-.0912
221.000	-.1285
222.000	-.1023
223.000	-.1174
224.000	-.1184
225.000	-.1204
226.000	-.1154

BETA (6) = 1.990 ALPHA (3) = 4.130 Q(PSF) = 42.885 PO = 2115.0 RUN NO = 37.000

SECTION (1)MAIN LND GR STRT DEPENDENT VARIABLE CP

DUMMY 1.0000

TAP	
201.000	-.0821
202.000	-.0750
203.000	-.0519
204.000	-.0590
205.000	-.0760
206.000	-.0931
211.000	-.0770
212.000	-.0379
213.000	-.0770
214.000	-.0519
215.000	-.0730
216.000	-.0841
221.000	-.0710
222.000	-.0519
223.000	-.0770
224.000	-.0790
225.000	-.0790
226.000	-.0723

OA163B MAIN GEAR STRUT (RFPW04)

BETA (6) = 1.990 ALPHA (4) = 6.180 Q(PSF) = 42.885 PO = 2115.0 RUN NO = 37.000

SECTION (1)MAIN LND GR STRT DEPENDENT VARIABLE CP

DUMMY 1.0000

TAP	
201.000	-.0300
202.000	-.0128
203.000	-.0017
204.000	.0063
205.000	-.0259
206.000	-.0350
211.000	-.0279
212.000	-.0239
213.000	-.0168
214.000	-.0017
215.000	-.0199
216.000	-.0633
221.000	-.0179
222.000	.0002
223.000	-.0229
224.000	-.0209
225.000	-.0219
226.000	-.0189

BETA (7) = 5.010 ALPHA (1) = .000 Q(PSF) = 42.840 PO = 2115.0 RUN NO = 38.000

SECTION (1)MAIN LND GR STRT DEPENDENT VARIABLE CP

DUMMY 1.0000

TAP	
201.000	-.1403
202.000	-.1313
203.000	-.1102
204.000	-.1182
205.000	-.1423
206.000	-.1574
211.000	-.1323
212.000	-.0328
213.000	-.1373
214.000	-.1102
215.000	-.1383
216.000	-.0760
221.000	-.1353
222.000	-.1102
223.000	-.1303
224.000	-.1303
225.000	-.1323
226.000	-.1283

OA163B MAIN GEAR STRUT (RFPW04)

BETA (7) = 5.010 ALPHA (2) = 2.050 Q(PSF) = 42.840 PO = 2115.0 RUN NO = 38.000

SECTION (1)MAIN LND GR STRT DEPENDENT VARIABLE CP

DUMMY 1.0000

TAP	
201.000	-.0973
202.000	-.0903
203.000	-.0621
204.000	-.0671
205.000	-.0913
206.000	-.1094
211.000	-.0933
212.000	-.0359
213.000	-.0913
214.000	-.0621
215.000	-.0903
216.000	-.0812
221.000	-.0873
222.000	-.0621
223.000	-.0913
224.000	-.0913
225.000	-.0943
226.000	-.0883

BETA (7) = 5.010 ALPHA (3) = 4.110 Q(PSF) = 42.840 PO = 2115.0 RUN NO = 38.000

SECTION (1)MAIN LND GR STRT DEPENDENT VARIABLE CP

DUMMY 1.0000

TAP	
201.000	-.0541
202.000	-.0390
203.000	-.0199
204.000	-.0057
205.000	-.0471
206.000	-.0481
211.000	-.0481
212.000	-.0279
213.000	-.0370
214.000	-.0178
215.000	-.0400
216.000	-.0683
221.000	-.0360
222.000	-.0269
223.000	-.0390
224.000	-.0330
225.000	-.0390
226.000	-.0390

OA163B MAIN GEAR STRUT (RFPW04)

BETA (7) = 5.010 ALPHA (4) = 6.200 Q(PSF) = 42.840 PO = 2115.0 RUN NO = 38.000

SECTION (1)MAIN LND GR STRT DEPENDENT VARIABLE CP

DUMMY 1.0000

TAP	
201.000	-.0098
202.000	.0032
203.000	.0234
204.000	.0527
205.000	-.0027
206.000	.0063
211.000	.0022
212.000	-.0138
213.000	.0083
214.000	.0245
215.000	.0012
216.000	-.0502
221.000	.0073
222.000	.0073
223.000	.0103
224.000	.0093
225.000	.0103
226.000	.0083

OA163B MAIN GEAR STRUT (RFPH05) (27 APR 77)

REFERENCE DATA

SREF = 2690.0000 SQ.FT. XMRP = 1076.7000 IN. XO
LREF = 474.8100 INCHES YMRP = .0000 IN. YO
BREF = 936.6800 INCHES ZMRP = 375.0000 IN. ZO
SCALE = .0405

PARAMETRIC DATA

SPDBRK = 25.000 BDFLAP = .000
ELV-L = 5.000 ELV-R = 5.000
PHI-N = 30.800 THETAN = 5.000
PHI-ML = 32.200 THETML = 5.000
PHI-MR = 32.200 THETMR = 5.000

BETA (1) = -5.050 ALPHA (1) = .050 Q(PSF) = 42.827 PO = 2115.0 RUN NO = 39.000

SECTION (1)MAIN LND GR STRT DEPENDENT VARIABLE CP

DUMMY 1.0000

TAP	
201.000	-.2241
202.000	-.2302
203.000	-.2291
204.000	-.2645
205.000	-.2433
206.000	-.2736
211.000	-.2322
212.000	-.1220
213.000	-.2372
214.000	-.2362
215.000	-.2352
216.000	-.0775
221.000	-.2342
222.000	-.2302
223.000	-.2332
224.000	-.2342
225.000	-.2342
226.000	-.2312

BETA (1) = -5.050 ALPHA (2) = 2.120 Q(PSF) = 42.827 PO = 2115.0 RUN NO = 39.000

SECTION (1)MAIN LND GR STRT DEPENDENT VARIABLE CP

DUMMY 1.0000

TAP	
201.000	-.1901
202.000	-.1780
203.000	-.1710
204.000	-.2093
205.000	-.1891
206.000	-.2194
211.000	-.1611
212.000	-.1226
213.000	-.1841
214.000	-.1801
215.000	-.1821

DATE 27 APR 77 OA163B PRESSURE DATA LISTING (RFPW05)

OA163B MAIN GEAR STRUT

BETA (1) = -5.050 ALPHA (2) = 2.120

SECTION (1)MAIN LND GR STRT DEPENDENT VARIABLE CP

DUMMY 1.0000

TAP	
216.000	-.0914
221.000	-.1841
222.000	-.1770
223.000	-.1801
224.000	-.1801
225.000	-.1821
226.000	-.1811

BETA (1) = -5.050 ALPHA (3) = 4.190 Q(PSF) = 42.827 PO = 2115.0 RUN NO = 39.000

SECTION (1)MAIN LND GR STRT DEPENDENT VARIABLE CP

DUMMY 1.0000

TAP	
201.000	-.1527
202.000	-.1255
203.000	-.1134
204.000	-.1527
205.000	-.1315
206.000	-.1617
211.000	-.1285
212.000	-.1185
213.000	-.1295
214.000	-.1245
215.000	-.1265
216.000	-.0903
221.000	-.1325
222.000	-.1185
223.000	-.1295
224.000	-.1275
225.000	-.1285
226.000	-.1275

OA163B MAIN GEAR STRUT (RFPW05)

BETA (1) = -5.050 ALPHA (4) = 6.270 Q(PSF) = 42.827 PO = 2115.0 RUN NO = 39.000

SECTION (1)MAIN LND GR STRT DEPENDENT VARIABLE CP

DUMMY 1.0000

TAP	
201.000	-.0822
202.000	-.0661
203.000	-.0500
204.000	-.0661
205.000	-.0741
206.000	-.0983
211.000	-.0731
212.000	-.1003
213.000	-.0711
214.000	-.0540
215.000	-.0701
216.000	-.0782
221.000	-.0741
222.000	-.0490
223.000	-.0671
224.000	-.0671
225.000	-.0681
226.000	-.0651

BETA (2) = -4.050 ALPHA (1) = .050 Q(PSF) = 42.862 PO = 2115.0 RUN NO = 40.000

SECTION (1)MAIN LND GR STRT DEPENDENT VARIABLE CP

DUMMY 1.0000

TAP	
201.000	-.2097
202.000	-.2197
203.000	-.2137
204.000	-.2549
205.000	-.2308
206.000	-.2579
211.000	-.2207
212.000	-.0931
213.000	-.2227
214.000	-.2207
215.000	-.2237
216.000	-.0791
221.000	-.2237
222.000	-.2177
223.000	-.2187
224.000	-.2187
225.000	-.2187
226.000	-.2147

OA163B MAIN GEAR STRUT (RFPW05)

BETA (2) = -4.050 ALPHA (2) = 2.110 Q(PSF) = 42.862 PO = 2115.0 RUN NO = 40.000

SECTION (1)MAIN LND GR STRT DEPENDENT VARIABLE CP

DUMMY 1.0000

TAP	
201.000	-.1685
202.000	-.1695
203.000	-.1584
204.000	-.1976
205.000	-.1795
206.000	-.2087
211.000	-.1715
212.000	-.0962
213.000	-.1745
214.000	-.1685
215.000	-.1745
216.000	-.0901
221.000	-.1765
222.000	-.1645
223.000	-.1695
224.000	-.1695
225.000	-.1685
226.000	-.1685

BETA (2) = -4.050 ALPHA (3) = 4.190 Q(PSF) = 42.862 PO = 2115.0 RUN NO = 40.000

SECTION (1)MAIN LND GR STRT DEPENDENT VARIABLE CP

DUMMY 1.0000

TAP	
201.000	-.1433
202.000	-.1089
203.000	-.0988
204.000	-.1291
205.000	-.1241
206.000	-.1514
211.000	-.1140
212.000	-.0867
213.000	-.1170
214.000	-.1059
215.000	-.1190
216.000	-.0867
221.000	-.1179
222.000	-.1018
223.000	-.1129
224.000	-.1129
225.000	-.1140
226.000	-.1119

OA163B MAIN GEAR STRUT (RFPW05)

BETA (2) = -4.050 ALPHA (4) = 6.240 Q(PSF) = 42.862 PO = 2115.0 RUN NO = 40.000

SECTION (1)MAIN LND GR STRT DEPENDENT VARIABLE CF

DUMMY 1.0000

TAP	
201.000	-.0752
202.000	-.0662
203.000	-.0390
204.000	-.0521
205.000	-.0672
206.000	-.0893
211.000	-.0662
212.000	-.0732
213.000	-.0621
214.000	-.0420
215.000	-.0611
216.000	-.0702
221.000	-.0682
222.000	-.0420
223.000	-.0692
224.000	-.0682
225.000	-.0702
226.000	-.0641

BETA (3) = -2.970 ALPHA (1) = .070 Q(PSF) = 42.822 PO = 2115.1 RUN NO = 41.000

SECTION (1)MAIN LND GR STRT DEPENDENT VARIABLE CF

DUMMY 1.0000

TAP	
201.000	-.2026
202.000	-.2107
203.000	-.2036
204.000	-.2408
205.000	-.2247
206.000	-.2519
211.000	-.2167
212.000	-.0720
213.000	-.2187
214.000	- 2167
215.000	-.2177
216.000	-.0791
221.000	-.2177
222.000	-.2087
223.000	-.2107
224.000	-.2117
225.000	-.2137
226.000	-.2117

OA163B MAIN GEAR STRUT (RFPW05)

BETA (3) = -2.970 ALPHA (2) = 2.110 Q(PSF) = 42.822 PO = 2115.1 RUN NO = 41.000

SECTION (1)MAIN LND GR STRT DEPENDENT VARIABLE CP

DUMMY 1.0000

TAP	
201.000	-.1612
202.000	-.1572
203.000	-.1481
204.000	-.1854
205.000	-.1713
206.000	-.1966
211.000	-.1592
212.000	-.0764
213.000	-.1642
214.000	-.1562
215.000	-.1612
216.000	-.0875
221.000	-.1642
222.000	-.1501
223.000	-.1572
224.000	-.1592
225.000	-.1602
226.000	-.1582

BETA (3) = -2.960 ALPHA (3) = 4.190 Q(PSF) = 42.822 PO = 2115.1 RUN NO = 41.000

SECTION (1)MAIN LND GR STRT DEPENDENT VARIABLE CP

DUMMY 1.0000

TAP	
201.000	-.1287
202.000	-.1004
203.000	-.0873
204.000	-.1075
205.000	-.1125
206.000	-.1317
211.000	-.1025
212.000	-.0702
213.000	-.1095
214.000	-.0954
215.000	-.1095
216.000	-.0833
221.000	-.1115
222.000	-.0873
223.000	-.1025
224.000	-.1035
225.000	-.1035
226.000	-.1004

OA163B MAIN GEAR STRUT (RFPW05)

BETA (3) = -2.979 ALPHA (4) = 6.260 Q(PSF) = 42.822 PO = 2115.1 RUN NO = 41.000

SECTION (1)MAIN LND GR STRT DEPENDENT VARIABLE CP

DUMMY 1.0000

TAP	
201.000	-.0633
202.000	-.0471
203.000	-.0320
204.000	-.0451
205.000	-.0593
206.000	-.0805
211.000	-.0582
212.000	-.0603
213.000	-.0542
214.000	-.0290
215.000	-.0512
216.000	-.0704
221.000	-.0512
222.000	-.0350
223.000	-.0572
224.000	-.0562
225.000	-.0582
226.000	-.0542

BETA (4) = -2.030 ALPHA (1) = .030 Q(PSF) = 42.883 PO = 2115.0 RUN NO = 42.000

SECTION (1)MAIN LND GR STRT DEPENDENT VARIABLE CP

DUMMY 1.0000

TAP	
201.000	-.1897
202.000	-.2007
203.000	-.1897
204.000	-.2299
205.000	-.2148
206.000	-.2399
211.000	-.2048
212.000	-.0650
213.000	-.2058
214.000	-.1977
215.000	-.2048
216.000	-.0841
221.000	-.2058
222.000	-.1947
223.000	-.1977
224.000	-.1997
225.000	-.1987
226.000	-.1987

OA163B MAIN GEAR STRUT (RFPW05)

BETA (4) = -2.030 ALPHA (2) = 2.120 Q(PSF) = 42.880 PO = 2115.0 RUN NO = 42.000

SECTION (1)MAIN LND GR STRT DEPENDENT VARIABLE CP

DUMMY 1.0000

TAP	
201.000	-.1596
202.000	-.1456
203.000	-.1315
204.000	-.1667
205.000	-.1556
206.000	-.1767
211.000	-.1405
212.000	-.0701
213.000	-.1516
214.000	-.1446
215.000	-.1506
216.000	-.0932
221.000	-.1516
222.000	-.1335
223.000	-.1435
224.000	-.1446
225.000	-.1456
226.000	-.1435

BETA (4) = -2.030 ALPHA (3) = 4.170 Q(PSF) = 42.880 PO = 2115.0 RUN NO = 42.000

SECTION (1)MAIN LND GR STRT DEPENDENT VARIABLE CP

DUMMY 1.0000

TAP	
201.000	-.1137
202.000	-.0966
203.000	-.0734
204.000	-.0905
205.000	-.1046
206.000	-.1258
211.000	-.0996
212.000	-.0643
213.000	-.0996
214.000	-.0824
215.000	-.1026
216.000	-.0875
221.000	-.1026
222.000	-.0723
223.000	-.0966
224.000	-.0945
225.000	-.0976
226.000	-.0935

OA163B MAIN GEAR STRUT (RFPW05)

BETA (4) = -2.030 ALPHA (4) = 6.260 Q(PSF) = 42.88) PO = 2115.0 RUN NO = 42.000

SECTION (1)MAIN LND GR STRT DEPENDENT VARIABLE CP

DUMMY 1.0000

TAP	
201.000	-.0520
202.000	-.0369
203.000	-.0248
204.000	-.0309
205.000	-.0500
206.000	-.0671
211.000	-.0500
212.000	-.0530
213.000	-.0439
214.000	-.0188
215.000	+.0409
216.000	-.0741
221.000	-.0389
222.000	-.0268
223.000	-.0429
224.000	-.0459
225.000	-.0459
226.000	-.0399

BETA (5) = -1.040 ALPHA (1) = .050 Q(PSF) = 42.92') PO = 2115.1 RUN NO = 43.000

SECTION (1)MAIN LND GR STRT DEPENDENT VARIABLE CP

DUMMY 1.0000

TAP	
201.000	-.1806
202.000	-.1876
203.000	-.1746
204.000	-.2188
205.000	-.2027
206.000	-.2258
211.000	-.1896
212.000	-.0620
213.000	-.1937
214.000	-.1846
215.000	-.1927
216.000	-.0881
221.000	-.1947
222.000	-.1786
223.000	-.1876
224.000	-.1886
225.000	-.1876
226.000	-.1876

OA163B MAIN GEAR STRUT (RFPW05)

BETA (5) = -1.040 ALPHA (2) = 2.120 Q(PSF) = 42.920 PO = 2115.1 RUN NO = 43.000

SECTION (1)MAIN LND GR STRT DEPENDENT VARIABLE CP

DUMMY 1.0000

TAP	
201.000	-.1540
202.000	-.1350
203.000	-.1179
204.000	-.1430
205.000	-.1460
206.000	-.1661
211.000	-.1320
212.000	-.0668
213.000	-.1400
214.000	-.1320
215.000	-.1440
216.000	-.0959
221.000	-.1410
222.000	-.1210
223.000	-.1350
224.000	-.1340
225.000	-.1330
226.000	-.1340

BETA (5) = -1.040 ALPHA (3) = 4.170 Q(PSF) = 42.920 PO = 2115.1 RUN NO = 43.000

SECTION (1)MAIN LND GR STRT DEPENDENT VARIABLE CP

DUMMY 1.0000

TAP	
201.000	-.0984
202.000	-.0893
203.000	-.0621
204.000	-.0772
205.000	-.0954
206.000	-.1145
211.000	-.0924
212.000	-.0611
213.000	-.0853
214.000	-.0611
215.000	-.0913
216.000	-.0903
221.000	-.0883
222.000	-.0631
223.000	-.0903
224.000	-.0883
225.000	-.0924
226.000	-.0863

OA163B MAIN GEAR STRUT (RFPW05)

BETA (5) = -1.040 ALPHA (4) = 6.250 Q(PSF) = 42.920 PO = 2115.1 RUN NO = 43.000

SECTION (1)MAIN LND GR STRT DEPENDENT VARIABLE CP

DUMMY 1.0000

TAP	
201.000	-.0420
202.000	-.0269
203.000	-.0158
204.000	-.0128
205.000	-.0370
206.000	-.0521
211.000	-.0380
212.000	-.0501
213.000	-.0319
214.000	-.0078
215.000	-.0299
216.000	-.0743
221.000	-.0269
222.000	-.0148
223.000	-.0340
224.000	-.0330
225.000	-.0319
226.000	-.0269

BETA (6) = .000 ALPHA (1) = .040 Q(PSF) = 42.80[illegible] PO = 2115.1 RUN NO = 44.000

SECTION (1)MAIN LND GR STRT DEPENDENT VARIABLE CP

DUMMY 1.0000

TAP	
201.000	-.1787
202.000	-.1737
203.000	-.1[illegible]96
204.000	-.1969
205.000	-.1888
206.000	-.2099
211.000	-.1727
212.000	-.0540
213.000	-.1808
214.000	-.1747
215.000	-.1828
216.000	-.0832
221.000	-.1798
222.000	-.1616
223.000	-.1707
224.000	-.1727
225.000	-.1727
226.000	-.1707

OA163B MAIN GEAR STRUT (RFPW05)

BETA (6) = .000 ALPHA (2) = 2.120 Q(PSF) = 42.817 PO = 2115.1 RUN NO = 44.000

SECTION (1)MAIN LND GR STRT DEPENDENT VARIABLE CP

DUMMY 1.0000

TAP	
201.000	-.1420
202.000	-.1248
203.000	-.1026
204.000	-.1208
205.000	-.1309
206.000	-.1541
211.000	-.1258
212.000	-.0572
213.000	-.1268
214.000	-.1137
215.000	-.1329
216.000	-.0895
221.000	-.1309
222.000	-.1036
223.000	-.1228
224.000	-.1228
225.000	-.1238
226.000	-.1208

BETA (6) = .000 ALPHA (3) = 4.170 Q(PSF) = 42.807 PO = 2115.1 RUN NO = 44.000

SECTION (1)MAIN LND GR STRT DEPENDENT VARIABLE CP

DUMMY 1.0000

TAP	
201.000	-.0894
202.000	-.0793
203.000	-.0541
204.000	-.0672
205.000	-.0834
206.000	-.0995
211.000	-.0814
212.000	-.0551
213.000	-.0783
214.000	-.0511
215.000	-.0763
216.000	-.0854
221.000	-.0733
222.000	-.0562
223.000	-.0814
224.000	-.0783
225.000	-.0844
226.000	-.0763

OA163B MAIN GEAR STRUT (RFPW05)

BETA (6) = .000 ALPHA (4) = 6.260 Q(PSF) = 42.807 PO = 2115.1 RUN NO = 44.000

SECTION (1)MAIN LND GR STRT DEPENDENT VARIABLE CP

DUMMY 1.0000

TAP	
201.000	-.0360
202.000	-.0249
203.000	-.0068
204.000	-.0007
205.000	-.0269
206.000	-.0340
211.000	-.0269
212.000	-.0441
213.000	-.0189
214.000	.0012
215.000	-.0179
216.000	-.0683
221.000	-.0128
222.000	-.0027
223.000	-.0209
224.000	-.0199
225.000	-.0209
226.000	-.0158

BETA (7) = .980 ALPHA (1) = .070 Q(PSF) = 42.847 PO = 2115.1 RUN NO = 45.000

SECTION (1)MAIN LND GR STRT DEPENDENT VARIABLE CP

DUMMY 1.0000

TAP	
201.000	-.1688
202.000	-.1577
203.000	-.1406
204.000	-.1698
205.000	-.1759
206.000	-.1930
211.000	-.1598
212.000	-.0490
213.000	-.1658
214.000	-.1577
215.000	-.1698
216.000	-.0772
221.000	-.1658
222.000	-.1447
223.000	-.1567
224.000	-.1587
225.000	-.1577
226.000	-.1557

DATE 27 APR 77 OA163B PRESSURE DATA LISTING (RFPW05)

OA163B MAIN GEAR STRUT

BETA (7) = .980 ALPHA (2) = 2.120 Q(PSF) = 42.847 PO = 2115.1 RUN NO = 45.000

SECTION (1)MAIN LND GR STRT DEPENDENT VARIABLE CP

DUMMY 1.0000

TAP	
201.000	-.1275
202.000	-.1144
203.000	-.0893
204.000	-.1074
205.000	-.1235
206.000	-.1416
211.000	-.1164
212.000	-.0550
213.000	-.1184
214.000	-.0903
215.000	-.1245
216.000	-.0872
221.000	-.1194
222.000	-.0893
223.000	-.1164
224.000	-.1144
225.000	-.1164
226.000	-.1144

BETA (7) = .980 ALPHA (3) = 4.170 Q(PSF) = 42.847 PO = 2115.1 RUN NO = 45.000

SECTION (1)MAIN LND GR STRT DEPENDENT VARIABLE CP

DUMMY 1.0000

TAP	
201.000	-.0764
202.000	-.0663
203.000	-.0431
204.000	-.0511
205.000	-.0703
206.000	-.0854
211.000	-.0693
212.000	-.0501
213.000	-.0633
214.000	-.0390
215.000	-.0643
216.000	-.0784
221.000	-.0602
222.000	-.0431
223.000	-.0683
224.000	-.0663
225.000	-.0683
226.000	-.0673

OA163B MAIN GEAR STRUT (RFPW05)

BETA (7) = .980 ALPHA (4) = 6.240 Q(PSF) = 42.817 PO = 2115.1 RUN NO = 45.000

SECTION (1)MAIN LND GR STRT DEPENDENT VARIABLE CP

DUMMY 1.0000

TAP	
201.000	-.0249
202.000	-.0158
203.000	.0073
204.000	.0143
205.000	-.0178
206.000	-.0198
211.000	-.0128
212.000	-.0380
213.000	-.0067
214.000	.0123
215.000	-.0077
216.000	-.0621
221.000	-.0047
222.000	.0042
223.000	-.0067
224.000	99.0000
225.000	-.0047
226.000	-.0037

BETA (8) = 1.979 ALPHA (1) = .060 Q(PSF) = 42.815 PO = 2115.1 RUN NO = 46.000

SECTION (1)MAIN LND GR STRT DEPENDENT VARIABLE CP

DUMMY 1.0000

TAP	
201.000	-.1625
202.000	-.1494
203.000	-.1283
204.000	-.1494
205.000	-.1645
206.000	-.1796
211.000	-.1524
212.000	-.0459
213.000	-.1524
214.000	-.1414
215.000	-.1585
216.000	-.0761
221.000	-.1575
222.000	-.1313
223.000	-.1474
224.000	-.1454
225.000	-.1454
226.000	-.1444

0A163B MAIN GEAR STRUT (RFPW05)

BETA (8) = 1.970 ALPHA (2) = 2.100 Q(PSF) = 42.845 PO = 2115.1 RUN NO = 46.000

SECTION (1)MAIN LND GR STRT DEPENDENT VARIABLE CF

DUMMY 1.0000

TAP	
201.000	-.1144
202.000	-.1064
203.000	-.0792
204.000	-.0933
205.000	-.1124
206.000	-.1295
211.000	-.1084
212.000	-.0520
213.000	-.1094
214.000	-.0732
215.000	-.1134
216.000	-.0822
221.000	-.1014
222.000	-.0752
223.000	-.1074
224.000	-.1054
225.000	-.1094
226.000	-.1014

BETA (8) = 1.970 ALPHA (3) = 4.180 Q(PSF) = 42.845 PO = 2115.1 RUN NO = 46.000

SECTION (1)MAIN LND GR STRT DEPENDENT VARIABLE CF

DUMMY 1.0000

TAP	
201.000	-.0663
202.000	-.0532
203.000	-.0310
204.000	-.0310
205.000	-.0582
206.000	-.0703
211.000	-.0582
212.000	-.0421
213.000	-.0532
214.000	-.0259
215.000	-.0491
216.000	-.0724
221.000	-.0471
222.000	-.0320
223.000	-.0522
224.000	-.0502
225.000	-.0562
226.000	-.0512

OA163B MAIN GEAR STRUT (RFPW05)

BETA (8) = 1.970 ALPHA (4) = 6.250 Q(PSF) = 42.845 PO = 2115.1 RUN NO = 46.000

SECTION (1)MAIN LND GR STRT DEPENDENT VARIABLE CP

DUMMY 1.0000

TAP	
201.000	-.0128
202.000	-.0037
203.000	.0184
204.000	.0385
205.000	-.0078
206.000	-.0007
211.000	-.0007
212.000	-.0320
213.000	.0063
214.000	.0224
215.000	.0002
216.000	-.0542
221.000	.0073
222.000	.0053
223.000	.0083
224.000	.0073
225.000	.0073
226.000	.0083

BETA (9) = 2.980 ALPHA (1) = .070 Q(PSF) = 42.930 PO = 2115.1 RUN NO = 47.000

SECTION (1)MAIN LND GR STRT DEPENDENT VARIABLE CP

DUMMY 1.0000

TAP	
201.000	-.1494
202.000	-.1373
203.000	-.1112
204.000	-.1293
205.000	-.1514
206.000	-.1674
211.000	-.1413
212.000	-.0399
213.000	-.1403
214.000	-.1182
215.000	-.1494
216.000	-.0710
221.000	-.1463
222.000	-.1132
223.000	-.1383
224.000	-.1353
225.000	-.1383
226.000	-.1343

OA163B MAIN GEAR STRUT (RFPW05)

BETA (9) = 2.990 ALPHA (2) = 2.100 Q(PSF) = 42.930 PO = 2115.1 RUN NO = 47.000

SECTION (1)MAIN LND GR STRT DEPENDENT VARIABLE CP

DUMMY 1.0000

TAP	
201.000	-.1002
202.000	-.0931
203.000	-.0670
204.000	-.0771
205.000	-.0962
206.000	-.1112
211.000	-.0952
212.000	-.0449
213.000	-.0931
214.000	-.0620
215.000	-.0931
216.000	-.0771
221.000	-.0861
222.000	-.0650
223.000	-.0962
224.000	-.0921
225.000	-.0962
226.000	-.0921

BETA (9) = 2.990 ALPHA (3) = 4.190 Q(PSF) = 42.930 PO = 2115.1 RUN NO = 47.000

SECTION (1)MAIN LND GR STRT DEPENDENT VARIABLE CP

DUMMY 1.0000

TAP	
201.000	-.0540
202.000	-.0439
203.000	-.0178
204.000	-.0077
205.000	-.0490
206.000	-.0510
211.000	-.0449
212.000	-.0399
213.000	-.0349
214.000	-.0138
215.000	-.0379
216.000	-.0711
221.000	-.0288
222.000	-.0268
223.000	-.0369
224.000	-.0329
225.000	-.0369
226.000	-.0359

DATE 27 APR 77 OA163B PRESSURE DATA LISTING (RFPW05)

OA163B MAIN GEAR STRUT

BETA (9) = 2.990 ALPHA (4) = 6.260 Q(PSF) = 42.930 PO = 2115.1 RUN NO = 47.000

SECTION (1)MAIN LND GR STRT DEPENDENT VARIABLE CP

DUMMY 1.0000

TAP	
201.000	-.0007
202.000	.0153
203.000	.0304
204.000	.0677
205.000	.0052
206.000	.0183
211.000	.0113
212.000	-.0259
213.000	.0173
214.000	.0334
215.000	.0073
216.000	-.0520
221.000	.0173
222.000	.0153
223.000	.0213
224.000	.0244
225.000	.0193
226.000	.0193

BETA (10) = 4.050 ALPHA (1) = .040 Q(PSF) = 42.912 PO = 2115.1 RUN NO = 48.000

SECTION (1)MAIN LND GR STRT DEPENDENT VARIABLE CP

DUMMY 1.0000

TAP	
201.000	-.1339
202.000	-.1279
203.000	-.1019
204.000	-.1149
205.000	-.1379
206.000	-.1499
211.000	-.1289
212.000	-.0368
213.000	-.1329
214.000	-.0969
215.000	-.1389
216.000	-.0698
221.000	-.1239
222.000	-.0989
223.000	-.1299
224.000	-.1279
225.000	-.1289
226.000	-.1239

DATE 27 APR 77 OA163B PRESSURE DATA LISTING (RFPW05)

OA163B MAIN GEAR STRUT

BETA (10) = 4.040 ALPHA (2) = 2.100 Q(PSF) = 42.912 PO = 2115.1 RUN NO = 48.000

SECTION (1)MAIN LND GR STRT DEPENDENT VARIABLE CP

DUMMY 1.0000

TAP	
201.000	-.0903
202.000	-.0812
203.000	-.0530
204.000	-.0540
205.000	-.0852
206.000	-.0973
211.000	-.0842
212.000	-.0379
213.000	-.0802
214.000	-.0520
215.000	-.0772
216.000	-.0732
221.000	-.0732
222.000	-.0530
223.000	-.0802
224.000	-.0802
225.000	-.0873
226.000	-.0792

BETA (10) = 4.050 ALPHA (3) = 4.190 Q(PSF) = 42.912 PO = 2115.1 RUN NO = 48.000

SECTION (1)MAIN LND GR STRT DEPENDENT VARIABLE CP

DUMMY 1.0000

TAP	
201.000	-.0430
202.000	-.0269
203.000	-.0067
204.000	.0163
205.000	-.0360
206.000	-.0259
211.000	-.0299
212.000	-.0279
213.000	-.0198
214.000	-.0027
215.000	-.0279
216.000	-.0631
221.000	-.0198
222.000	-.0219
223.000	-.0188
224.000	-.0168
225.000	-.0178
226.000	-.0208

OA163B MAIN GEAR STRUT (RFPW05)

BETA (10) = 4.050 ALPHA (4) = 6.250 Q(PSF) = 42.312 PO = 2115.1 RUN NO = 48.000

SECTION (1)MAIN LND GR STRT DEPENDENT VARIABLE CP

DUMMY 1.0000

TAP	
201.000	.0083
202.000	.0325
203.000	.0365
204.000	.0959
205.000	.0194
206.000	.0355
211.000	.0224
212.000	-.0148
213.000	.0264
214.000	.0405
215.000	.0113
216.000	-.0450
221.000	.0274
222.000	.0214
223.000	.0335
224.000	.0335
225.000	.0325
226.000	.0274

BETA (11) = 5.000 ALPHA (1) = .060 Q(PSF) = 42.347 PO = 2115.1 RUN NO = 49.000

SECTION (1)MAIN LND GR STRT DEPENDENT VARIABLE CP

DUMMY 1.0000

TAP	
201.000	-.1211
202.000	-.1151
203.000	-.0860
204.000	-.0960
205.000	-.1181
206.000	-.1322
211.000	-.1161
212.000	-.0228
213.000	-.1201
214.000	-.0840
215.000	-.1151
216.000	-.0589
221.000	-.1101
222.000	-.0860
223.000	-.1161
224.000	-.1131
225.000	-.1171
226.000	-.1131

0A163B MAIN GEAR STRUT (RFPW05)

BETA (11) = 5.000 ALPHA (2) = 2.130 Q(PSF) = 42.347 PO = 2115.1 RUN NO = 49.000

SECTION (1)MAIN LND GR STRT DEPENDENT VARIABLE CP

DUMMY 1.0000

TAP	
201.000	-.0810
202.000	-.0680
203.000	-.0389
204.000	-.0328
205.000	-.0730
206.000	-.0730
211.000	-.0700
212.000	-.0258
213.000	-.0609
214.000	-.0389
215.000	-.0640
216.000	-.0640
221.000	-.0579
222.000	-.0469
223.000	-.0640
224.000	-.0599
225.000	-.0609
226.000	-.0609

BETA (11) = 5.000 ALPHA (3) = 4.190 Q(PSF) = 42.847 PO = 2115.1 RUN NO = 49.000

SECTION (1)MAIN LND GR STRT DEPENDENT VARIABLE CP

DUMMY 1.0000

TAP	
201.000	-.0330
202.000	-.0108
203.000	.0022
204.000	.0457
205.000	-.0229
206.000	-.0068
211.000	-.0148
212.000	-.0169
213.000	-.0098
214.000	.0043
215.000	-.0239
216.000	-.0553
221.000	-.0108
222.000	-.0128
223.000	-.0047
224.000	-.0047
225.000	-.0068
226.000	-.0088

OA163B MAIN GEAR STRUT (RFPW05)

BETA (11) = 5.000 ALPHA (4) = 6.250 Q(PSF) = 42.347 PO = 2115.1 RUN NO = 48.000

SECTION (1)MAIN LND GR STRT DEPENDENT VARIABLE CP

DUMMY 1.0000

TAP	
201.000	.0113
202.000	.0427
203.000	.0447
204.000	.1134
205.000	.0245
206.000	.0396
211.000	.0285
212.000	-.0037
213.000	.0315
214.000	.0467
215.000	.0154
216.000	-.0391
221.000	.0346
222.000	.0275
223.000	.0386
224.000	.0427
225.000	.0396
226.000	.0325

OA163B MAIN GEAR STRUT (RFPW06) (27 APR 77)

REFERENCE DATA

SREF =	2690.0000 SQ.FT.	XMRP =	1076.7000 IN.	XO	
LREF =	474.8100 INCHES	YMRP =	.0000 IN.	YO	
BREF =	936.6800 INCHES	ZMRP =	375.0000 IN.	ZO	
SCALE =	.0405				

PARAMETRIC DATA

SPDBRK =	25.000	BDFLAP =	16.300
ELV-L =	.000	ELV-R =	.000
PHI-N =	30.800	THETAN =	5.000
PHI-ML =	32.200	THETML =	5.000
PHI-MR =	32.200	THETMR =	5.000

BETA (1) = -5.030 ALPHA (1) = .010 Q(PSF) = 42.822 PO = 2119.9 RUN NO = 51.000

SECTION (1)MAIN LND GR STRT DEPENDENT VARIABLE CP

DUMMY 1.0000

TAP	
201.000	-.2363
202.000	-.2393
203.000	-.2424
204.000	-.2685
205.000	-.2514
206.000	-.2836
211.000	-.2434
212.000	-.3128
213.000	-.2464
214.000	-.2454
215.000	-.2454
216.000	-.0893
221.000	-.2454
222.000	-.2444
223.000	-.2434
224.000	-.2444
225.000	-.2454
226.000	-.2403

BETA (1) = -5.030 ALPHA (2) = 2.100 Q(PSF) = 42.822 PO = 2119.9 RUN NO = 51.000

SECTION (1)MAIN LND GR STRT DEPENDENT VARIABLE CP

DUMMY 1.0000

TAP	
201.000	-.1900
202.000	-.1880
203.000	-.1819
204.000	-.2192
205.000	-.1990
206.000	-.2303
211.000	-.1910
212.000	-.2937
213.000	-.1930
214.000	-.1860
215.000	-.1920

OA163B MAIN GEAR STRUT (RFPW06)

BETA (1) = -5.030 ALPHA (2) = 2.100

SECTION (1)MAIN LND GR STRT DEPENDENT VARIABLE CP

DUMMY 1.0000

TAP	
216.000	-.0974
221.000	-.1950
222.000	-.1850
223.000	-.1900
224.000	-.1920
225.000	-.1900
226.000	-.1890

BETA (1) = -5.030 ALPHA (3) = 4.140 Q(PSF) = 42.822 PO = 2119.9 RUN NO = 51.000

SECTION (1)MAIN LND GR STRT DEPENDENT VARIABLE CP

DUMMY 1.0000

TAP	
201.000	-.1500
202.000	-.1349
203.000	-.1228
204.000	-.1581
205.000	-.1439
206.000	-.1722
211.000	-.1379
212.000	-.2690
213.000	-.1389
214.000	-.1329
215.000	-.1369
216.000	-.0905
221.000	-.1409
222.000	-.1278
223.000	-.1359
224.000	-.1349
225.000	-.1369
226.000	-.1369

OA163B MAIN GEAR STRUT (RFPW06)

BETA (1) = -5.040 ALPHA (4) = 6.230 Q(PSF) = 42 822 PO = 2119.9 RUN NO = 51.000

SECTION (1)MAIN LND GR STRT DEPENDENT VARIABLE CP

DUMMY 1.0000

TAP	
201.000	-.0995
202.000	-.0763
203.000	-.0612
204.000	-.0773
205 000	-.0854
206.000	-.1076
211.000	-.0794
212.000	-.2367
213.000	-.0834
214.000	-.0652
215.000	-.0834
216.000	-.0753
221.000	-.0874
222.000	-.0602
223.000	-.0804
224.000	-.0794
225.000	-.0804
226.000	-.0784

BETA (2) = -4.030 ALPHA (1) = .010 Q(PSF) = 42.780 PO = 2119.8 RUN NO = 52.000

SECTION (1)MAIN LND GR STRT DEPENDENT VARIABLE CP

DUMMY 1.0000

TAP	
201.000	-.2197
202.000	-.2308
203.000	-.2277
204.000	-.2630
205.000	-.2429
206.000	-.2721
211.000	-.2338
212.000	-.2207
213.000	-.2358
214.000	-.2348
215.000	-.2338
216.000	-.0865
221.000	-.2358
222.000	-.2287
223.000	-.2328
224.000	-.2328
225.000	-.2328
226.000	-.2328

OA163B MAIN GEAR STRUT (RFPW06)

BETA (2) = -4.030 ALPHA (2) = 2.090 Q(PSF) = 42 780 PO = 2119.8 RUN NO = 52.000

SECTION (1)MAIN LND GR STRT DEPENDENT VARIABLE CP

DUMMY 1.0000

TAP	
201.000	-.1713
202.000	-.1794
203.000	-.1713
204.000	-.2097
205.000	-.1905
206.000	-.2168
211.000	-.1824
212.000	-.2097
213.000	-.1824
214.000	-.1774
215.000	-.1845
216.000	-.0916
221.000	-.1845
222.000	-.1754
223.000	-.1784
224.000	-.1794
225.000	-.1794
226.000	-.1804

BETA (2) = -4.030 ALPHA (3) = 4.140 Q(PSF) = 42.780 PO = 2119.8 RUN NO = 52.000

SECTION (1)MAIN LND GR STRT DEPENDENT VARIABLE CP

DUMMY 1.0000

TAP	
201.000	-.1489
202.000	-.1207
203.000	-.1106
204.000	-.1469
205.000	-.1318
206.000	-.1580
211.000	-.1247
212.000	-.1863
213.000	-.1278
214.000	-.1197
215.000	-.1268
216.000	-.0834
221.000	-.1278
222.000	-.1106
223.000	-.1247
224.000	-.1257
225.000	-.1247
226.000	-.1237

OA163B MAIN GEAR STRUT (RFPW06)

BETA (2) = -4.030 ALPHA (4) = 6.240 Q(PSF) = 42.780 PO = 2119.8 RUN NO = 52.000

SECTION (1)MAIN LND GR STRT DEPENDENT VARIABLE CP

DUMMY 1.0000

TAP	
201.000	-.0844
202.000	-.0703
203.000	-.0511
204.000	-.0642
205.000	-.0763
206.000	-.1035
211.000	-.0753
212.000	-.1499
213.000	-.0733
214.000	-.0541
215.000	-.0723
216.000	-.0592
221.000	-.0753
222.000	-.0501
223.000	-.0743
224.000	-.0723
225.000	-.0733
226.000	-.0713

BETA (3) = -2.950 ALPHA (1) = .010 Q(PSF) = 42.832 PO = 2119.9 RUN NO = 53.000

SECTION (1)MAIN LND GR STRT DEPENDENT VARIABLE CP

DUMMY 1.0000

TAP	
201.000	-.2140
202.000	-.2220
203.000	-.2160
204.000	-.2442
205.000	-.2341
206.000	-.2613
211.000	-.2271
212.000	-.1375
213.000	-.2261
214.000	-.2250
215.000	-.2240
216.000	-.0772
221.000	-.2261
222.000	-.2200
223.000	-.2220
224.000	-.2210
225.000	-.2220
226.000	-.2190

OA163B MAIN GEAR STRUT (RFPW06)

BETA (3) = -2.950 ALPHA (2) = 2.100 Q(PSF) = 42.832 PO = 2119.9 RUN NO = 53.000

SECTION (1)MAIN LND GR STRT DEPENDENT VARIABLE CP

DUMMY 1.0000

TAP	
201.000	-.1607
202.000	-.1648
203.000	-.1527
204.000	-.1939
205.000	-.1778
206.000	-.2050
211.000	-.1688
212.000	-.1315
213.000	-.1698
214.000	-.1648
215.000	-.1708
216.000	-.0822
221.000	-.1728
222.000	-.1607
223.000	-.1658
224.000	-.1658
225.000	-.1668
226.000	-.1658

BETA (3) = -2.950 ALPHA (3) = 4.150 Q(PSF) = 42.832 PO = 2119.9 RUN NO = 53.000

SECTION (1)MAIN LND GR STRT DEPENDENT VARIABLE CP

DUMMY 1.0000

TAP	
201.000	-.1430
202.000	-.1077
203.000	-.0976
204.000	-.1178
205.000	-.1218
206.000	-.1440
211.000	-.1087
212.000	-.1147
213.000	-.1178
214.000	-.1067
215.000	-.1198
216.000	-.0744
221.000	-.1198
222.000	-.0986
223.000	-.1117
224.000	-.1127
225.000	-.1147
226.000	-.1107

OA163B MAIN GEAR STRUT (RFPW0E)

BETA (3) = -2.950 ALPHA (4) = 6.220 Q(PSF) = 42.832 PO = 2119.9 RUN NO = 53.000

SECTION (1)MAIN LND GR STRT DEPENDENT VARIABLE CP

DUMMY 1.0000

TAP	
201.000	-.0764
202.000	-.0622
203.000	-.0400
204.000	-.0542
205.000	-.0683
206.000	-.0905
211.000	-.0683
212.000	-.0955
213.000	-.0622
214.000	-.0390
215.000	-.0612
216.000	-.0602
221.000	-.0632
222.000	-.0411
223.000	-.0643
224.000	-.0653
225.000	-.0683
226.000	-.0653

BETA (4) = -2.020 ALPHA (1) = .040 Q(PSF) = 42.867 PO = 2119.8 RUN NO = 54.000

SECTION (1)MAIN LND GR STRT DEPENDENT VARIABLE CP

DUMMY 1.0000

TAP	
201.000	-.2019
202.000	-.2079
203.000	-.1979
204.000	-.2351
205.000	-.2240
206.000	-.2472
211.000	-.2140
212.000	-.0963
213.000	-.2140
214.000	-.2109
215.000	-.2150
216.000	-.0832
221.000	-.2160
222.000	-.2039
223.000	-.2079
224.000	-.2089
225.000	-.2079
226.000	-.2069

DATE 27 APR 77 OA163B PRESSURE DATA LISTING (RFPW06)

OA163B MAIN GEAR STRUT

BETA (4) = -2.020 ALPHA (2) = 2.090 Q(PSF) = 42.867 PO = 2119.8 RUN NO = 54.000

SECTION (1)MAIN LND GR STRT DEPENDENT VARIABLE CP

DUMMY 1.0000

TAP	
201.000	-.1610
202.000	-.1539
203.000	-.1418
204.000	-.1801
205.000	-.1650
206.000	-.1932
211.000	-.1549
212.000	-.0955
213.000	-.1620
214.000	-.1519
215.000	-.1590
216.000	-.0894
221.000	-.1600
222.000	-.1459
223.000	-.1549
224.000	-.1539
225.000	-.1539
226.000	-.1529

BETA (4) = -2.020 ALPHA (3) = 4.150 Q(PSF) = 42.867 PO = 2119.8 RUN NO = 54.000

SECTION (1)MAIN LND GR STRT DEPENDENT VARIABLE CP

DUMMY 1.0000

TAP	
201.000	-.1267
202.000	-.1025
203.000	-.0344
204.000	-.1005
205.000	-.1106
206.000	-.1338
211.000	-.1035
212.000	-.0814
213.000	-.1076
214.000	-.0914
215.000	-.1106
216.000	-.0793
221.000	-.1106
222.000	-.0824
223.000	-.1025
224.000	-.1015
225.000	-.1005
226.000	-.1015

OA163B MAIN GEAR STRUT (RFPW06)

BETA (4) = -2.020 ALPHA (4) = 6.220 Q(PSF) = 42.367 PO = 2119.8 RUN NO = 54.000

SECTION (1)MAIN LND GR STRT DEPENDENT VARIABLE CP

DUMMY 1.0000

TAP	
201.000	-.0600
202.000	-.0469
203.000	-.0328
204.000	-.0439
205.000	-.0570
206.000	-.0771
211.000	-.0590
212.000	-.0640
213.000	-.0540
214.000	-.0278
215.000	-.0489
216.000	-.0610
221.000	-.0489
222.000	-.0328
223.000	-.0560
224.000	-.0540
225.000	-.0580
226.000	-.0509

BETA (5) = -1.020 ALPHA (1) = .030 Q(PSF) = 42.815 PO = 2119.8 RUN NO = 55.000

SECTION (1)MAIN LND GR STRT DEPENDENT VARIABLE CP

DUMMY 1.0000

TAP	
201.000	-.1892
202.000	-.1952
203.000	-.1841
204.000	-.2264
205.000	-.2093
206.000	-.2355
211.000	-.1992
212.000	-.0813
213.000	-.1982
214.000	-.1942
215.000	-.2013
216.000	-.0954
221.000	-.2002
222.000	-.1871
223.000	-.1932
224.000	-.1952
225.000	-.1962
226.000	-.1942

OA163B MAIN GEAR STRUT (RFPW06)

BETA (5) = -1.020 ALPHA (2) = 2.100 Q(PSF) = 42.815 PO = 2119.8 RUN NO = 55.000

SECTION (1)MAIN LND GR STRT DEPENDENT VARIABLE CP

DUMMY 1.0000

TAP	
201.000	-.1568
202.000	-.1407
203.000	-.1266
204.000	-.1548
205.000	-.1548
206.000	-.1770
211.000	-.1387
212.000	-.0783
213.000	-.1508
214.000	-.1417
215.000	-.1508
216.000	-.0984
221.000	-.1478
222.000	-.1296
223.000	-.1427
224.000	-.1427
225.000	-.1417
226.000	-.1387

BETA (5) = -1.020 ALPHA (3) = 4.150 Q(PSF) = 42.815 PO = 2119.8 RUN NO = 55.000

SECTION (1)MAIN LND GR STRT DEPENDENT VARIABLE CP

DUMMY 1.0000

TAP	
201.000	-.1096
202.000	-.0965
203.000	-.0713
204.000	-.0854
205.000	-.1036
206.000	-.1237
211.000	-.1005
212.000	-.0663
213.000	-.0985
214.000	-.0713
215.000	-.1005
216.000	-.0884
221.000	-.0995
222.000	-.0703
223.000	-.0985
224.000	-.0945
225.000	-.0955
226.000	-.0945

OA163B MAIN GEAR STRUT (RFPW06)

BETA (5) = -1.020 ALPHA (4) = 6.240 Q(PSF) = 42.815 PO = 2119.8 RUN NO = 55.000

SECTION (1)MAIN LND GR STRT DEPENDENT VARIABLE CP

DUMMY 1.0000

TAP	
201.000	-.0501
202.000	-.0370
203.000	-.0249
204.000	-.0269
205.000	-.0461
206.000	-.0632
211.000	-.0481
212.000	-.0481
213.000	-.0421
214.000	-.0189
215.000	-.0370
216.000	-.0653
221.000	-.0360
222.000	-.0249
223.000	-.0451
224.000	-.0421
225.000	-.0431
226.000	-.0400

BETA (6) = .000 ALPHA (1) = .010 Q(PSF) = 42.787 PO = 2119.8 RUN NO = 56.000

SECTION (1)MAIN LND GR STRT DEPENDENT VARIABLE CP

DUMMY 1.0000

TAP	
201.000	-.1828
202.000	-.1808
203.000	-.1667
204.000	-.2079
205.000	-.1979
206.000	-.2180
211.000	-.1808
212.000	-.0570
213.000	-.1868
214.000	-.1818
215.000	-.1888
216.000	-.0822
221.000	-.1868
222.000	-.1717
223.000	-.1808
224.000	-.1808
225.000	-.1818
226.000	-.1808

OA163B MAIN GEAR STRUT (RFPH06)

BETA (6) = .000 ALPHA (2) = 2.100 Q(PSF) = 42.787 PO = 2119.8 RUN NO = 56.000

SECTION (1)MAIN LND GR STRT DEPENDENT VARIABLE CP

DUMMY 1.0000

TAP	
201.000	-.1519
202.000	-.1317
203.000	-.1126
204.000	-.1337
205.000	-.1438
206.000	-.1660
211.000	-.1347
212.000	-.0602
213.000	-.1378
214.000	-.1237
215.000	-.1418
216.000	-.0914
221.000	-.1408
222.000	-.1156
223.000	-.1307
224.000	-.1287
225.000	-.1317
226.000	-.1307

BETA (6) = .000 ALPHA (3) = 4.160 Q(PSF) = 42.787 PO = 2119.8 RUN NO = 56.000

SECTION (1)MAIN LND GR STRT DEPENDENT VARIABLE CP

DUMMY 1.0000

TAP	
201.000	-.0956
202.000	-.0875
203.000	-.0603
204.000	-.0754
205.000	-.0936
206.000	-.1108
211.000	-.0906
212.000	-.0532
213.000	-.0896
214.000	-.0562
215.000	-.0865
216.000	-.0815
221.000	-.0835
222.000	-.0603
223.000	-.0896
224.000	-.0875
225.000	-.0895
226.000	-.0845

OA163B MAIN GEAR STRUT (RFPW06)

BETA (6) = .000 ALPHA (4) = 6.220 Q(PSF) = 42.787 PO = 2119.8 RUN NO = 56.000

SECTION (1)MAIN LND GR STRT DEPENDENT VARIABLE CP

DUMMY 1.0000

TAP	
201.000	-.0442
202.000	-.0310
203.000	-.0179
204.000	-.0118
205.000	-.0371
206.000	-.0492
211.000	-.0371
212.000	-.0381
213.000	-.0310
214.000	-.0098
215.000	-.0280
216.000	-.0624
221.000	-.0229
222.000	-.0138
223.000	-.0320
224.000	-.0300
225.000	-.0320
226.000	-.0280

BETA (7) = 1.000 ALPHA (1) = .020 Q(PSF) = 42.847 PO = 2119.9 RUN NO = 57.000

SECTION (1)MAIN LND GR STRT DEPENDENT VARIABLE CP

DUMMY 1.0000

TAP	
201.000	-.1786
202.000	-.1685
203.000	-.1535
204.000	-.1866
205.000	-.1886
206.000	-.2057
211.000	-.1726
212.000	-.0479
213.000	-.1776
214.000	-.1705
215.000	-.1826
216.000	-.0811
221.000	-.1746
222.000	-.1555
223.000	-.1655
224.000	-.1685
225.000	-.1675
226.000	-.1655

0A163B MAIN GEAR STRUT (RFPW06)

BETA (7) = 1.000 ALPHA (2) = 2.080 Q(PSF) = 42.847 PO = 2119.9 RUN NO = 57.000

SECTION (1)MAIN LND GR STRT DEPENDENT VARIABLE CP

DUMMY 1.0000

TAP	
201.000	-.1386
202.000	-.1215
203.000	-.0994
204.000	-.1155
205.000	-.1336
206.000	-.1507
211.000	-.1245
212.000	-.0530
213.000	-.1235
214.000	-.1054
215.000	-.1326
216.000	-.0863
221.000	-.1306
222.000	-.0994
223.000	-.1215
224.000	-.1205
225.000	-.1225
226.000	-.1205

BETA (7) = 1.000 ALPHA (3) = 4.150 Q(PSF) = 42.847 PO = 2119.9 RUN NO = 57.000

SECTION (1)MAIN LND GR STRT DEPENDENT VARIABLE CP

DUMMY 1.0000

TAP	
201.000	-.0853
202.000	-.0752
203.000	-.0520
204.000	-.0581
205.000	-.0792
206.000	-.0953
211.000	-.0782
212.000	-.0440
213.000	-.0762
214.000	-.0460
215.000	-.0732
216.000	-.0792
221.000	-.0681
222.000	-.0510
223.000	-.0772
224.000	-.0772
225.000	-.0792
226.000	-.0762

OA163B MAIN GEAR STRUT (RFPW06)

BETA (7) = 1.000 ALPHA (4) = 6.240 Q(PSF) = 42.847 PO = 2119.9 RUN NO = 57.000

SECTION (1)MAIN LND GR STRT DEPENDENT VARIABLE CP

DUMMY 1.0000

TAP	
201.000	-.0300
202.000	-.0260
203.000	-.0007
204.000	.0053
205.000	-.0239
206.000	-.0320
211.000	-.0219
212.000	-.0310
213.000	-.0148
214.000	.0053
215.000	-.0179
216.000	-.0583
221.000	-.0098
222.000	-.0027
223.000	-.0159
224.000	-.0148
225.000	-.0128
226.000	-.0128

BETA (8) = 1.980 ALPHA (1) = .010 Q(PSF) = 42.860 PO = 2119.9 RUN NO = 58.000

SECTION (1)MAIN LND GR STRT DEPENDENT VARIABLE CP

DUMMY 1.0000

TAP	
201.000	-.1685
202.000	-.1564
203.000	-.1383
204.000	-.1615
205.000	-.1735
206.000	-.1906
211.000	-.1595
212.000	-.0449
213.000	-.1625
214.000	-.1524
215.000	-.1685
216.000	-.0811
221.000	-.1645
222.000	-.1394
223.000	-.1504
224.000	-.1544
225.000	-.1554
226.000	-.1534

OA163B MAIN GEAR STRUT (RFPW06)

BETA (8) = 1.980 ALPHA (2) = 2.110 Q(PSF) = 42.860 PO = 2119.9 RUN NO = 58.000

SECTION (1)MAIN LND GR STRT DEPENDENT VARIABLE CP

DUMMY 1.0000

TAP	
201.000	-.1218
202.000	-.1127
203.000	-.0875
204.000	-.1006
205.000	-.1218
206.000	-.1349
211.000	-.1147
212.000	-.0471
213.000	-.1167
214.000	-.0824
215.000	-.1228
216.000	-.0885
221.000	-.1107
222.000	-.0824
223.000	-.1157
224.000	-.1127
225.000	-.1147
226.000	-.1087

BETA (8) = 1.980 ALPHA (3) = 4.160 Q(PSF) = 42.860 PO = 2119.9 RUN NO = 58.000

SECTION (1)MAIN LND GR STRT DEPENDENT VARIABLE CP

DUMMY 1.0000

TAP	
201.000	-.0712
202.000	-.0611
203.000	-.0349
204.000	-.0420
205.000	-.0672
206.000	-.0813
211.000	-.0662
212.000	-.0370
213.000	-.0601
214.000	-.0349
215.000	-.0611
216.000	-.0762
221.000	-.0551
222.000	-.0410
223.000	-.0632
224.000	-.0611
225.000	-.0672
226.000	-.0591

OA163B MAIN GEAR STRUT (RFPW06)

BETA (8) = 1.980 ALPHA (4) = 6.240 Q(PSF) = 42.860 PO = 2119.9 RUN NO = 58.000

SECTION (1)MAIN LND GR STRT DEPENDENT VARIABLE CP

DUMMY 1.0000

TAP	
201.000	-.0188
202.000	-.0118
203.000	.0103
204.000	.0304
205.000	-.0148
206.000	-.0128
211.000	-.0098
212.000	-.0228
213.000	-.0007
214.000	.0153
215.000	-.0067
216.000	-.0551
221.000	.0002
222.000	-.0017
223.000	-.0027
224.000	-.0017
225.000	-.0007
226.000	-.0047

BETA (9) = 2.980 ALPHA (1) = .010 Q(PSF) = 42.877 PO = 2119.9 RUN NO = 59.000

SECTION (1)MAIN LND GR STRT DEPENDENT VARIABLE CP

DUMMY 1.0000

TAP	
201.000	-.1586
202.000	-.1465
203.000	-.1234
204.000	-.1375
205.000	-.1606
206.000	-.1787
211.000	-.1516
212.000	-.0359
213.000	-.1506
214.000	-.1284
215.000	-.1606
216.000	-.0771
221.000	-.1546
222.000	-.1234
223.000	-.1445
224.000	-.1435
225.000	-.1455
226.000	-.1435

DATE 27 APR 77 OA163B PRESSURE DATA LISTING (RFPW06)

OA163B MAIN GEAR STRUT

BETA (9) = 2.980 ALPHA (2) = 2.100 Q(PSF) = 42.877 PO = 2119.9 RUN NO = 59.000

SECTION (1)MAIN LND GR STRT DEPENDENT VARIABLE CP

DUMMY 1.0000

TAP	
201.000	-.1103
202.000	-.1012
203.000	-.0751
204.000	-.0841
205.000	-.1072
206.000	-.1223
211.000	-.1042
212.000	-.0409
213.000	-.1052
214.000	-.0690
215.000	-.1032
216.000	-.0841
221.000	-.0972
222.000	-.0741
223.000	-.1042
224.000	-.1022
225.000	-.1072
226.000	-.1022

BETA (9) = 2.980 ALPHA (3) = 4.150 Q(PSF) = 42.877 PO = 2119.9 RUN NO = 59.000

SECTION (1)MAIN LND GR STRT DEPENDENT VARIABLE CP

DUMMY 1.0000

TAP	
201.000	-.0611
202.000	-.0531
203.000	-.0229
204.000	-.0198
205.000	-.0571
206.000	-.0611
211.000	-.0541
212.000	-.0329
213.000	-.0440
214.000	-.0249
215.000	-.0460
216.000	-.0722
221.000	-.0400
222.000	-.0309
223.000	-.0470
224.000	-.0440
225.000	-.0491
226.000	-.0480

OA163B MAIN GEAR STRUT (RFPW06)

BETA (9) = 2.980 ALPHA (4) = 6.230 Q(PSF) = 42.877 PO = 2119.9 RUN NO = 59.000

SECTION (1)MAIN LND GR STRT DEPENDENT VARIABLE CP

DUMMY 1.0000

TAP	
201.000	-.0118
202.000	.0042
203.000	.0194
204.000	.0566
205.000	-.0047
206.000	.0032
211.000	.0022
212.000	-.0189
213.000	.0083
214.000	.0224
215.000	-.0007
216.000	-.0531
221.000	.0083
222.000	.0063
223.000	.0133
224.000	.0123
225.000	.0113
226.000	.0103

BETA (10) = 4.060 ALPHA (1) = .020 Q(PSF) = 42.825 PO = 2119.9 RUN NO = 60.000

SECTION (1)MAIN LND GR STRT DEPENDENT VARIABLE CP

DUMMY 1.0000

TAP	
201.000	-.1423
202.000	-.1353
203.000	-.1112
204.000	-.1242
205.000	-.1473
206.000	-.1604
211.000	-.1393
212.000	-.0308
213.000	-.1413
214.000	-.1061
215.000	-.1473
216.000	-.0700
221.000	-.1343
222.000	-.1092
223.000	-.1333
224.000	-.1323
225.000	-.1333
226.000	-.1323

OA163B MAIN GEAR STRUT (RFPWOS)

BETA (10) = 4.060 ALPHA (2) = 2.090 Q(PSF) = 42.825 PO = 2119.9 RUN NO = 60.000

SECTION (1)MAIN LND GR STRT DEPENDENT VARIABLE CP

DUMMY 1.0000

TAP	
201.000	-.0976
202.000	-.0905
203.000	-.0612
204.000	-.0643
205.000	-.0925
206.000	-.1076
211.000	-.0925
212.000	-.0350
213.000	-.0885
214.000	-.0602
215.000	-.0885
216.000	-.0784
221.000	-.0854
222.000	-.0643
223.000	-.0905
224.000	-.0905
225.000	-.0945
226.000	-.0895

BETA (10) = 4.060 ALPHA (3) = 4.160 Q(PSF) = 42.825 PO = 2119.9 RUN NO = 60.000

SECTION (1)MAIN LND GR STRT DEPENDENT VARIABLE CP

DUMMY 1.0000

TAP	
201.000	-.0521
202.000	-.0370
203.000	-.0158
204.000	-.0007
205.000	-.0471
206.000	-.0380
211.000	-.0330
212.000	-.0259
213.000	-.0299
214.000	-.0138
215.000	-.0360
216.000	-.0652
221.000	-.0299
222.000	-.0309
223.000	-.0299
224.000	-.0249
225.000	-.0289
226.000	-.0309

DATE 27 APR 77 OA163B PRESSURE DATA LISTING (RFPW06)

OA163B MAIN GEAR STRUT

BETA (10) = 4.060 ALPHA (4) = 6.230 Q(PSF) = 42.825 PO = 2119.9 RUN NO = 60.000

SECTION (1)MAIN LND GR STRT DEPENDENT VARIAELE CP

DUMMY 1.0000

TAP	
201.000	-.0017
202.000	.0245
203.000	.0285
204.000	.0861
205.000	.0083
206.000	.0245
211.000	.0133
212.000	-.0138
213.000	.0154
214.000	.0315
215.000	.0012
216.000	-.0462
221.000	.0204
222.000	.0133
223.000	.0224
224.000	.0234
225.000	.0224
226.000	.0214

BETA (11) = 5.010 ALPHA (1) = .050 Q(PSF) = 42.762 PO = 2119.9 RUN NO = 61.000

SECTION (1)MAIN LND GR STRT DEPENDENT VARIAB_E CP

DUMMY 1.0000

TAP	
201.000	-.1306
202.000	-.1256
203.000	-.0964
204.000	-.1054
205.000	-.1296
206.000	-.1457
211.000	-.1276
212.000	-.0229
213.000	-.1266
214.000	-.0923
215.000	-.1286
216.000	-.0641
221.000	-.1205
222.000	-.0964
223.000	-.1266
224.000	-.1246
225.000	-.1316
226.000	-.1236

OA163B MAIN GEAR STRUT (RFPW06)

BETA (11) = 5.010 ALPHA (2) = 2.090 Q(PSF) = 42.762 PO = 2119.9 RUN NO = 61.000

SECTION (1)MAIN LND GR STRT DEPENDENT VARIABLE CP

DUMMY 1.0000

TAP	
201.000	-.0898
202.000	-.0746
203.000	-.0483
204.000	-.0483
205.000	-.0827
206.000	-.0857
211.000	-.0827
212.000	-.0250
213.000	-.0716
214.000	-.0473
215.000	-.0746
216.000	-.0665
221.000	-.0705
222.000	-.0554
223.000	-.0756
224.000	-.0716
225.000	-.0756
226.000	-.0726

BETA (11) = 5.010 ALPHA (3) = 4.160 Q(PSF) = 42.762 PO = 2119.9 RUN NO = 61.000

SECTION (1)MAIN LND GR STRT DEPENDENT VARIABLE CP

DUMMY 1.0000

TAP	
201.000	-.0421
202.000	-.0229
203.000	-.0047
204.000	.0305
205.000	-.0330
206.000	-.0189
211.000	-.0259
212.000	-.0148
213.000	-.0199
214.000	-.0027
215.000	-.0330
216.000	-.0562
221.000	-.0189
222.000	-.0229
223.000	-.0138
224.000	-.0118
225.000	-.0148
226.000	-.0168

OA163B MAIN GEAR STRUT (RFPW06)

BETA (11) = 5.010 ALPHA (4) = 6.250 Q(PSF) = 12.762 PO = 2119.9 RUN NO = 61.000

SECTION (1)MAIN LND GR STRT DEPENDENT VARIABLE CP

DUMMY 1.0000

TAP	
201.000	.0022
202.000	.0355
203.000	.0375
204.000	.1092
205.000	.0164
206.000	.0325
211.000	.0224
212.000	.0022
213.000	.0244
214.000	.0426
215.000	.0083
216.000	-.0360
221.000	.0254
222.000	.0204
223.000	.0355
224.000	.0335
225.000	.0315
226.000	.0275

OA163B MAIN GEAR STRUT (RFPW07) (27 APR 77)

REFERENCE DATA

SREF =	2690.0000 SQ.FT.	XMRP =	1076.7000 IN. XO		
LREF =	474.8100 INCHES	YMRP =	.0000 IN. YO		
BREF =	936.6800 INCHES	ZMRP =	375.0000 IN. ZO		
SCALE =	.0405				

PARAMETRIC DATA

SPDBRK =	25.000	BDFLAP =	.000
ELV-L =	.000	ELV-R =	.000
PHI-N =	66.000	THETAN =	108.000
PHI-ML =	26.000	THETML =	4.000
PHI-MR =	26.000	THETMR =	4.000

BETA (1) = -5.050 ALPHA (1) = .000 Q(PSF) = 42.770 PO = 2117.8 RUN NO = 62.000

SECTION (1)MAIN LND GR STRT DEPENDENT VARIABLE CP

DUMMY 1.0000

TAP	
201.000	-.2657
202.000	-.2495
203.000	-.2546
204.000	-.2647
205.000	-.2576
206.000	-.2838
211.000	-.2516
212.000	-.1407
213.000	-.2546
214.000	-.2556
215.000	-.2435
216.000	-.0732
221.000	-.2526
222.000	-.2536
223.000	-.2536
224.000	-.2536
225.000	-.2546
226.000	-.2485

BETA (1) = -5.050 ALPHA (2) = 2.070 Q(PSF) = 42.770 PO = 2117.8 RUN NO = 62.000

SECTION (1)MAIN LND GR STRT DEPENDENT VARIABLE CP

DUMMY 1.0000

TAP	
201.000	-.2171
202.000	-.1999
203.000	-.1968
204.000	-.2140
205.000	-.2059
206.000	-.2363
211.000	-.2009
212.000	-.1372
213.000	-.2019
214.000	-.2009
215.000	-.1979

OA163B MAIN GEAR STRUT (RFPW07)

BETA (1) = -5.050 ALPHA (2) = 2.070

SECTION (1)MAIN LND GR STRT DEPENDENT VARIABLE CP

DUMMY 1.0000

TAP	
216.000	-.0826
221.000	-.2029
222.000	-.1968
223.000	-.2029
224.000	.2039
225.000	-.2049
226.000	-.1989

BETA (1) = -5.050 ALPHA (3) = 4.130 Q(PSF) = 42.770 PO = 2117.8 RUN NO = 62.000

SECTION (1)MAIN LND GR STRT DEPENDENT VARIABLE CP

DUMMY 1.0000

TAP	
201.000	-.1660
202.000	-.1458
203.000	-.1367
204.000	-.1599
205.000	-.1498
206.000	-.1821
211.000	-.1478
212.000	-.1267
213.000	-.1488
214.000	-.1438
215.000	-.1478
216.000	-.0803
221.000	-.1519
222.000	-.1398
223.000	-.1488
224.000	-.1488
225.000	-.1508
226.000	-.1458

OA163B MAIN GEAR STRUT (RFPW07)

BETA (1) = -5.050 ALPHA (4) = 6.190 Q(PSF) = 42.770 PO = 2117.8 RUN NO = 62.000

SECTION (1)MAIN LND GR STRT DEPENDENT VARIABLE CP

DUMMY 1.0000

TAP	
201.000	-.1118
202.000	-.0856
203.000	-.0805
204.000	-.0906
205.000	-.0967
206.000	-.1199
211.000	-.0936
212.000	-.1098
213.000	-.0957
214.000	-.0835
215.000	-.0926
216.000	-.0674
221.000	-.0987
222.000	-.0795
223.000	-.0916
224.000	-.0916
225.000	-.0957
226.000	-.0886

BETA (2) = -2.020 ALPHA (1) = .000 Q(PSF) = 42.842 PO = 2117.8 RUN NO = 63.000

SECTION (1)MAIN LND GR STRT DEPENDENT VARIABLE CP

DUMMY 1.0000

TAP	
201.000	-.2079
202.000	-.2170
203.000	-.2140
204.000	-.2432
205.000	-.2281
206.000	-.2582
211.000	-.2220
212.000	-.1023
213.000	-.2210
214.000	-.2230
215.000	-.2220
216.000	-.0721
221.000	-.2220
222.000	-.2160
223.000	-.2200
224.000	-.2210
225.000	-.2210
226.000	-.2150

OA163B MAIN GEAR STRUT (RFPW07)

BETA (2) = -2.030 ALPHA (2) = 2.070 Q(PSF) = 42.842 PO = 2117.8 RUN NO = 63.000

SECTION (1)MAIN LND GR STRT DEPENDENT VARIABLE CP

DUMMY 1.0000

TAP	
201.000	-.1634
202.000	-.1644
203.000	-.1593
204.000	-.1876
205.000	-.1745
206.000	-.2038
211.000	-.1674
212.000	-.1017
213.000	-.1715
214.000	-.1654
215.000	-.1684
216.000	-.0795
221.000	-.1715
222.000	-.1604
223.000	-.1695
224.000	-.1695
225.000	-.1705
226.000	-.1695

BETA (2) = -2.020 ALPHA (3) = 4.120 Q(PSF) = 42.842 PO = 2117.8 RUN NO = 63.000

SECTION (1)MAIN LND GR STRT DEPENDENT VARIABLE CP

DUMMY 1.0000

TAP	
201.000	-.1367
202.000	-.1095
203.000	-.0994
204.000	-.1095
205.000	-.1186
206.000	-.1407
211.000	-.1135
212.000	-.0904
213.000	-.1196
214.000	-.1055
215.000	-.1176
216.000	-.0732
221.000	-.1196
222.000	-.0994
223.000	-.1135
224.000	-.1135
225.000	-.1135
226.000	-.1095

DATE 27 APR 77 OA163B PRESSURE DATA LISTING (RFPW07)

OA163B MAIN GEAR STRUT

BETA (2) = -2.030 ALPHA (4) = 6.190 Q(PSF = 42.842 PO = 2117.8 RUN NO = 63.000

SECTION (1)MAIN LND GR STRT DEPENDENT VARIABLE CP

DUMMY 1.0000

TAP	
201.000	-.0741
202.000	-.0640
203.000	-.0439
204.000	-.0510
205.000	-.0691
206.000	-.0892
211.000	-.0701
212.000	-.0761
213.000	-.0650
214.000	-.0439
215.000	-.0630
216.000	-.0580
221.000	-.0671
222.000	-.0459
223.000	-.0691
224.000	-.0650
225.000	-.0711
226.000	-.0671

BETA (3) = -1.030 ALPHA (1) = .000 Q(PSF) = 42.870 PO = 2117.8 RUN NO = 64.000

SECTION (1)MAIN LND GR STRT DEPENDENT VARIABLE CP

DUMMY 1.0000

TAP	
201.000	-.1964
202.000	-.2045
203.000	-.2014
204.000	-.2286
205.000	-.2175
206.000	-.2476
211.000	-.2105
212.000	-.0760
213.000	-.2125
214.000	-.2085
215.000	-.2105
216.000	-.0669
221.000	-.2125
222.000	-.2035
223.000	-.2085
224.000	-.2065
225.000	-.2075
226.000	-.2055

OA163B MAIN GEAR STRUT (RFPW07)

BETA (3) = -1.030 ALPHA (2) = 2.080 Q(PSF) = 42.870 PO = 2117.8 RUN NO = 64.000

SECTION (1)MAIN LND GR STRT DEPENDENT VARIABLE CP

DUMMY 1.0000

TAP	
201.000	-.1585
202.000	-.1535
203.000	-.1424
204.000	-.1685
205.000	-.1615
206.000	-.1916
211.000	-.1535
212.000	-.0751
213.000	-.1565
214.000	-.1504
215.000	-.1565
216.000	-.0751
221.000	-.1575
222.000	-.1454
223.000	-.1555
224.000	-.1565
225.000	-.1565
226.000	-.1524

BETA (3) = -1.030 ALPHA (3) = 4.120 Q(PSF) = 42.870 PO = 2117.8 RUN NO = 64.000

SECTION (1)MAIN LND GR STRT DEPENDENT VARIABLE CP

DUMMY 1.0000

TAP	
201.000	-.1219
202.000	-.1048
203.000	-.0886
204.000	-.0977
205.000	-.1098
206.000	-.1331
211.000	-.1068
212.000	-.0694
213.000	-.1088
214.000	-.0926
215.000	-.1118
216.000	-.0724
221.000	-.1129
222.000	-.0886
223.000	-.1048
224.000	-.1058
225.000	-.1068
226.000	-.1038

DATE 27 APR 77 OA163B PRESSURE DATA LISTING (RFPW07)

OA163B MAIN GEAR STRUT

BETA (3) = -1.040 ALPHA (4) = 6.200 Q(PSF) = 42.870 PO = 2117.8 RUN NO = 64.000

SECTION (1)MAIN LND GR STRT DEPENDENT VARIABLE CP

DUMMY 1.0000

TAP	
201.000	-.0612
202.000	-.0501
203.000	-.0350
204.000	-.0400
205.000	-.0591
206.000	-.0763
211.000	-.0591
212.000	-.0602
213.000	-.0551
214.000	-.0360
215.000	-.0511
216.000	-.0581
221.000	-.0521
222.000	-.0370
223.000	-.0581
224.000	-.0581
225.000	-.0602
226.000	-.0541

BETA (4) = -.010 ALPHA (1) = .000 Q(PSF) = 42.835 PO = 2117.8 RUN NO = 65.000

SECTION (1)MAIN LND GR STRT DEPENDENT VARIABLE CP

DUMMY 1.0000

TAP	
201.000	-.1857
202.000	-.1907
203.000	-.1846
204.000	-.2168
205.000	-.2027
206.000	-.2329
211.000	-.1967
212.000	-.0590
213.000	-.1967
214.000	-.1917
215.000	-.1977
216.000	-.0640
221.000	-.1987
222.000	-.1867
223.000	-.1947
224.000	-.1947
225.000	-.1947
226.000	-.1917

OA163B MAIN GEAR STRUT (RFPW07)

BETA (4) = -.010 ALPHA (2) = 2.050 Q(PSF) = 42.835 PO = 2117.8 RUN NO = 65.000

SECTION (1)MAIN LND GR STRT DEPENDENT VARIABLE CP

DUMMY 1.0000

TAP	
201.000	-.1597
202.000	-.1416
203.000	-.1315
204.000	-.1486
205.000	-.1516
206.000	-.1748
211.000	-.1406
212.000	-.0621
213.000	-.1496
214.000	-.1426
215.000	-.1486
216.000	-.0742
221.000	-.1506
222.000	-.1325
223.000	-.1446
224.000	-.1456
225.000	-.1456
226.000	-.1416

BETA (4) = -.010 ALPHA (3) = 4.120 Q(PSF) = 42.835 PO = 2117.8 RUN NO = 65.000

SECTION (1)MAIN LND GR STRT DEPENDENT VARIABLE CP

DUMMY 1.0000

TAP	
201.000	-.1106
202.000	-.0955
203.000	-.0743
204.000	-.0844
205.000	-.0995
206.000	-.1197
211.000	-.0985
212.000	-.0561
213.000	-.0985
214.000	-.0753
215.000	-.1005
216.000	-.0693
221.000	-.1005
222.000	-.0753
223.000	-.0985
224.000	-.0965
225.000	-.0975
226.000	-.0955

DATE 27 APR 77 OA163B PRESSURE DATA LISTING (RFPW07)

OA163B MAIN GEAR STRLT

BETA (4) = -.010 ALPHA (4) = 6.200 Q(PSF) = 42.835 PO = 2117.8 RUN NO = 65.000

SECTION (1)MAIN LND GR STRT DEPENDENT VARIABLE CP

DUMMY 1.0000

TAP	
201.000	-.0522
202.000	-.0371
203.000	-.0270
204.000	-.0310
205.000	-.0492
206.000	-.0664
211.000	-.0522
212.000	-.0482
213.000	-.0411
214.000	-.0260
215.000	-.0482
216.000	-.0522
221.000	-.0492
222.000	-.0290
223.000	-.0462
224.000	-.0492
225.000	-.0522
226.000	-.0442

BETA (5) = .980 ALPHA (1) = .000 Q(PSF) = 42.865 PO = 2117.8 RUN NO = 66.000

SECTION (1)MAIN LND GR STRT DEPENDENT VARIABLE CP

DUMMY 1.0000

TAP	
201.000	-.1760
202.000	-.1820
203.000	-.1730
204.000	-.1972
205.000	-.1941
206.000	-.2223
211.000	-.1841
212.000	-.0511
213.000	-.1881
214.000	-.1851
215.000	-.1931
216.000	-.0632
221.000	-.1871
222.000	-.1760
223.000	-.1831
224.000	-.1851
225.000	-.1871
226.000	-.1800

OA163B MAIN GEAR STRUT (RFPW07)

BETA (5) = .980 ALPHA (2) = 2.080 Q(PSF) = 42.865 PO = 2117.8 RUN NO = 66.000

SECTION (1)MAIN LND GR STRT DEPENDENT VARIABLE CP

DUMMY 1.0000

TAP	
201.000	-.1513
202.000	-.1332
203.000	-.1192
204.000	-.1322
205.000	-.1423
206.000	-.1634
211.000	-.1322
212.000	-.0629
213.000	-.1383
214.000	-.1262
215.000	-.1403
216.000	-.0739
221.000	-.1423
222.000	-.1222
223.000	-.1342
224.000	-.1332
225.000	-.1332
226.000	-.1302

BETA (5) = .980 ALPHA (3) = 4.120 Q(PSF) = 42.865 PO = 2117.8 RUN NO = 66.000

SECTION (1)MAIN LND GR STRT DEPENDENT VARIABLE CP

DUMMY 1.0000

TAP	
201.000	-.0996
202.000	-.0865
203.000	-.0673
204.000	-.0764
205.000	-.0925
206.000	-.1107
211.000	-.0925
212.000	-.0501
213.000	-.0905
214.000	-.0643
215.000	-.0895
216.000	-.0673
221.000	-.0885
222.000	-.0643
223.000	-.0915
224.000	-.0915
225.000	-.0915
226.000	-.0875

C-5

OA163B MAIN GEAR STRUT (RFPW07)

BETA (5) = .990 ALPHA (4) = 6.200 Q(PSF) = 42.865 PO = 2117.8 RUN NO = 66.000

SECTION (1)MAIN LND GR STRT DEPENDENT VARIABLE CP

DUMMY 1.0000

TAP	
201.000	-.0440
202.000	-.0259
203.000	-.0188
204.000	-.0128
205.000	-.0369
206.000	-.0510
211.000	-.0410
212.000	-.0349
213.000	-.0329
214.000	-.0138
215.000	-.0329
216.000	-.0500
221.000	-.0339
222.000	-.0188
223.000	-.0390
224.000	-.0359
225.000	-.0359
226.000	-.0339

BETA (6) = 1.980 ALPHA (1) = .010 Q(PSF) = 42.770 PO = 2117.8 RUN NO = 67.000

SECTION (1)MAIN LND GR STRT DEPENDENT VARIABLE CP

DUMMY 1.0000

TAP	
201.000	-.1709
202.000	-.1668
203.000	-.1578
204.000	-.1769
205.000	-.1809
206.000	-.2031
211.000	-.1678
212.000	-.0390
213.000	-.1759
214.000	-.1678
215.000	-.1749
216.000	-.0601
221.000	-.1769
222.000	-.1588
223.000	-.1688
224.000	-.1678
225.000	-.1698
226.000	-.1658

DATE 27 APR 77 OA163B PRESSURE DATA LISTING (RFPH07)

OA163B MAIN GEAR STRUT

BETA (6) = 1.980 ALPHA (2) = 2.080 Q(PSF) = 42.770 PO = 2117.8 RUN NO = 67.000

SECTION (1)MAIN LND GR STRT DEPENDENT VARIABLE CP

DUMMY 1.0000

TAP	
201.000	-.1379
202.000	-.1207
203.000	-.1026
204.000	-.1137
205.000	-.1298
206.000	-.1500
211.000	-.1217
212.000	-.0410
213.000	-.1258
214.000	-.1076
215.000	-.1278
216.000	-.0683
221.000	-.1298
222.000	-.1036
223.000	-.1187
224.000	-.1207
225.000	-.1217
226.000	-.1187

BETA (6) = 1.980 ALPHA (3) = 4.120 Q(PSF) = 42.770 PO = 2117.8 RUN NO = 67.000

SECTION (1)MAIN LND GR STRT DEPENDENT VARIABLE CP

DUMMY 1.0000

TAP	
201.000	-.0875
202.000	-.0774
203.000	-.0562
204.000	-.0643
205.000	-.0804
206.000	-.0976
211.000	-.0835
212.000	-.0380
213.000	-.0804
214.000	-.0542
215.000	-.0794
216.000	-.0643
221.000	-.0744
222.000	-.0572
223.000	-.0825
224.000	-.0825
225.000	-.0845
226.000	-.0764

OA163B MAIN GEAR STRUT (RFPH0

BETA (6) = 1.980 ALPHA (4) = 6.200 Q(PSF) = 42.770 PO = 2117.8 RUN NO = 67.000

SECTION (1)MAIN LND GR STRT DEPENDENT VARIABLE CP

DUMMY 1.0000

TAP	
201.000	-.0391
202.000	-.0199
203.000	-.0088
204.000	-.0047
205.000	-.0331
206.000	-.0422
211.000	-.0361
212.000	-.0290
213.000	-.0270
214.000	-.0088
215.000	-.0260
216.000	-.0492
221.000	-.0260
222.000	-.0078
223.000	-.0300
224.000	-.0290
225.000	-.0310
226.000	-.0270

OA163B MAIN GEAR STRUT (RFPW08) (27 APR 77)

REFERENCE DATA

SREF = 2690.0000 SQ.FT. XMRP = 1076.7000 IN. XO
LREF = 474.8100 INCHES YMRP = .0000 IN. YO
BREF = 936.6800 INCHES ZMRP = 375.0000 IN. ZO
SCALE = .0405

PARAMETRIC DATA

SPDBRK = 25.000 BDFLAP = .000
ELV-L = .000 ELV-R = .000
PHI-N = 66.000 THETAN = 108.000
PHI-ML = 32.200 THETML = 5.000
PHI-MR = 32.200 THETMR = 5.000

BETA (1) = -5.030 ALPHA (1) = .000 Q(PSF) = 42.787 PO = 2116.4 RUN NO = 68.000

SECTION (1)MAIN LND GR STRT DEPENDENT VARIABLE CP

DUMMY 1.0000

TAP	
201.000	-.2448
202.000	-.2468
203.000	-.2498
204.000	-.2729
205.000	-.2578
206.000	-.2889
211.000	-.2488
212.000	-.1192
213.000	-.2498
214.000	-.2518
215.000	-.2498
216.000	-.0720
221.000	-.2518
222.000	-.2508
223.000	-.2488
224.000	-.2528
225.000	-.2528
226.000	-.2468

BETA (1) = -5.040 ALPHA (2) = 2.090 Q(PSF) = 42.787 PO = 2116.4 RUN NO = 68.000

SECTION (1)MAIN LND GR STRT DEPENDENT VARIABLE CP

DUMMY 1.0000

TAP	
201.000	-.2013
202.000	-.1983
203.000	-.1943
204.000	-.2255
205.000	-.2094
206.000	-.2386
211.000	-.1993
212.000	-.1217
213.000	-.2023
214.000	-.1983
215.000	-.2013

OA163B MAIN GEAR STRUT (RFPW08)

BETA (1) = -5.040 ALPHA (2) = 2.090

SECTION (1)MAIN LND GR STRT DEPENDENT VARIABLE CP

DUMMY 1.0000

TAP	
216.000	-.0884
221.000	-.2023
222.000	-.1953
223.000	-.1983
224.000	-.1983
225.000	-.2003
226.000	-.1963

BETA (1) = -5.030 ALPHA (3) = 4.130 Q(PSF) = 42.787 PO = 2116.4 RUN NO = 68.000

SECTION (1)MAIN LND GR STRT DEPENDENT VARIABLE CP

DUMMY 1.0000

TAP	
201.000	-.1544
202.000	-.1463
203.000	-.1342
204.000	-.1665
205.000	-.1554
206.000	-.1847
211.000	-.1483
212.000	-.1150
213.000	-.1493
214.000	-.1453
215.000	-.1483
216.000	-.0856
221.000	-.1534
222.000	-.1412
223.000	-.1473
224.000	-.1493
225.000	-.1503
226.000	-.1473

OA163B MAIN GEAR STRUT (RFPW08)

BETA (1) = -5.030 ALPHA (4) = 6.210 Q(PSF) = 42.787 PO = 2116.4 RUN NO = 68.000

SECTION (1)MAIN LND GR STRT DEPENDENT VARIABLE CP

DUMMY 1.0000

TAP	
201.000	-.1190
202.000	-.0868
203.000	-.0725
204.000	-.0957
205.000	-.0957
206.000	-.1200
211.000	-.0897
212.000	-.0978
213.000	-.0927
214.000	-.0796
215.000	-.0947
216.000	-.0694
221.000	-.0947
222.000	-.0745
223.000	-.0897
224.000	-.0897
225.000	-.0907
226.000	-.0887

BETA (2) = -2.020 ALPHA (1) = .000 Q(PSF) = 42.880 PO = 2116.5 RUN NO = 69.000

SECTION (1)MAIN LND GR STRT DEPENDENT VARIABLE CP

DUMMY 1.0000

TAP	
201.000	-.2183
202.000	-.2173
203.000	-.2122
204.000	-.2475
205.000	-.2314
206.000	-.2576
211.000	-.2233
212.000	-.0873
213.000	-.2223
214.000	-.2183
215.000	-.2203
216.000	-.0742
221.000	-.2233
222.000	-.2133
223.000	-.2153
224.000	-.2163
225.000	-.2173
226.000	-.2153

OA163B MAIN GEAR STRUT (RFPW08)

BETA (2) = -2.020 ALPHA (2) = 2.060 Q(PSF) = 42.880 PO = 2116.5 RUN NO = 69.000

SECTION (1)MAIN LND GR STRT DEPENDENT VARIABLE CP

DUMMY 1.0000

TAP	
201.000	-.1606
202.000	-.1627
203.000	-.1506
204.000	-.1928
205.000	-.1777
206.000	-.2029
211.000	-.1657
212.000	-.0862
213.000	-.1707
214.000	-.1616
215.000	-.1687
216.000	-.0822
221.000	-.1727
222.000	-.1566
223.000	-.1637
224.000	-.1657
225.000	-.1657
226.000	-.1647

BETA (2) = -2.020 ALPHA (3) = 4.120 Q(PSF) = 42.880 PO = 2116.5 RUN NO = 69.000

SECTION (1)MAIN LND GR STRT DEPENDENT VARIABLE CP

DUMMY 1.0000

TAP	
201.000	-.1363
202.000	-.1082
203.000	-.0951
204.000	-.1142
205.000	-.1213
206.000	-.1434
211.000	-.1102
212.000	-.0760
213.000	-.1172
214.000	-.1052
215.000	-.1192
216.000	-.0760
221.000	-.1202
222.000	-.0971
223.000	-.1112
224.000	-.1102
225.000	-.1122
226.000	-.1112

0A163B MAIN GEAR STRUT (RFPW0B)

BETA (2) = -2.020 ALPHA (4) = 6.200 Q(PSF) = 42.880 PO = 2116.5 RUN NO = 69.000

SECTION (1)MAIN LND GR STRT DEPENDENT VARIAELE CP

DUMMY 1.0000

TAP	
201.000	-.0713
202.000	-.0612
203.000	-.0400
204.000	-.0511
205.000	-.0652
206.000	-.0874
211.000	-.0662
212.000	-.0612
213.000	-.0622
214.000	-.0370
215.000	-.0602
216.000	-.0602
221.000	-.0571
222.000	-.0440
223.000	-.0632
224.000	-.0642
225.000	-.0662
226.000	-.0612

BETA (3) = -1.020 ALPHA (1) = .000 Q(PSF) = 42.887 PO = 2116.4 RUN NO = 70.000

SECTION (1)MAIN LND GR STRT DEPENDENT VARIABLE CP

DUMMY 1.0000

TAP	
201.000	-.2002
202.000	-.2053
203.000	-.1932
204.000	-.2316
205.000	-.2214
206.000	-.2456
211.000	-.2113
212.000	-.0602
213.000	-.2093
214.000	-.2043
215.000	-.2093
216.000	-.0702
221.000	-.2113
222.000	-.2012
223.000	-.2043
224.000	-.2033
225.000	-.2043
226.000	-.2053

OA163B MAIN GEAR STRUT (RFPW08)

BETA (3) = -1.010 ALPHA (2) = 2.070 Q(PSF) = 42.887 PO = 2116.4 RUN NO = 70.000

SECTION (1)MAIN LND GR STRT DEPENDENT VARIABLE CP

DUMMY 1.0000

TAP	
201.000	-.1635
202.000	-.1515
203.000	-.1364
204.000	-.1696
205.000	-.1656
206.000	-.1857
211.000	-.1485
212.000	-.0630
213.000	-.1595
214.000	-.1525
215.000	-.1595
216.000	-.0801
221.000	-.1585
222.000	-.1404
223.000	-.1515
224.000	-.1505
225.000	-.1515
226.000	-.1495

BETA (3) = -1.020 ALPHA (3) = 4.140 Q(PSF) = 42.887 PO = 2116.4 RUN NO = 70.000

SECTION (1)MAIN LND GR STRT DEPENDENT VARIABLE CP

DUMMY 1.0000

TAP	
201.000	-.1176
202.000	-.1045
203.000	-.0803
204.000	-.0964
205.000	-.1116
206.000	-.1337
211.000	-.1085
212.000	-.0571
213.000	-.1075
214.000	-.0823
215.000	-.1105
216.000	-.0763
221.000	-.1085
222.000	-.0793
223.000	-.1045
224.000	-.1025
225.000	-.1045
226.000	-.1025

OA1638 MAIN GEAR STRUT (RFPW08)

BETA (3) = -1.020 ALPHA (4) = 6.210 Q(PSF) = 42.887 PO = 2116.4 RUN NO = 70.000

SECTION (1)MAIN LND GR STRT DEPENDENT VARIABLE CP

DUMMY 1.0000

TAP	
201.000	-.0620
202.000	-.0499
203.000	-.0308
204.000	-.0369
205.000	-.0559
206.000	-.0740
211.000	-.0569
212.000	-.0469
213.000	-.0509
214.000	-.0278
215.000	-.0499
216.000	-.0600
221.000	-.0459
222.000	-.0338
223.000	-.0519
224.000	-.0549
225.000	-.0549
226.000	-.0499

BETA (4) = .010 ALPHA (1) = -.010 Q(PSF) = 42.855 PO = 2116.4 RUN NO = 71.000

SECTION (1)MAIN LND GR STRT DEPENDENT VARIABLE CP

DUMMY 1.0000

TAP	
201.000	-.1879
202.000	-.1919
203.000	-.1788
204.000	-.2211
205.000	-.2070
206.000	-.2311
211.000	-.1949
212.000	-.0500
213.000	-.1969
214.000	-.1909
215.000	-.1999
216.000	-.0701
221.000	-.1999
222.000	-.1828
223.000	-.1919
224.000	-.1919
225.000	-.1919
226.000	-.1909

OA163B MAIN GEAR STRUT (RFPW0B)

BETA (4) = .000 ALPHA (2) = 2.050 Q(PSF) = 42.855 PO = 2116.4 RUN NO = 71.000

SECTION (1)MAIN LND GR STRT DEPENDENT VARIABLE CP

DUMMY 1.0000

TAP	
201.000	-.1607
202.000	-.1396
203.000	-.1235
204.000	-.1476
205.000	-.1546
206.000	-.1738
211.000	-.1406
212.000	-.0550
213.000	-.1456
214.000	-.1385
215.000	-.1496
216.000	-.0802
221.000	-.1496
222.000	-.1245
223.000	-.1385
224.000	-.1396
225.000	-.1406
226.000	-.1365

BETA (4) = .010 ALPHA (3) = 4.120 Q(PSF) = 42.855 PO = 2116.4 RUN NO = 71.000

SECTION (1)MAIN LND GR STRT DEPENDENT VARIABLE CP

DUMMY 1.0000

TAP	
201.000	-.1075
202.000	-.0964
203.000	-.0672
204.000	-.0873
205.000	-.1055
206.000	-.1226
211.000	-.1015
212.000	-.0491
213.000	-.1015
214.000	-.0702
215.000	-.1035
216.000	-.0783
221.000	-.0934
222.000	-.0732
223.000	-.1015
224.000	-.0994
225.000	-.0994
226.000	-.0984

OA163B MAIN GEAR STRUT (RFPW08)

BETA (4) = .010 ALPHA (4) = 6.200 Q(PSF) = 42.855 PO = 2116.4 RUN NO = 71.000

SECTION (1)MAIN LND GR STRT DEPENDENT VARIABLE CP

DUMMY 1.0000

TAP	
201.000	-.0511
202.000	-.0370
203.000	-.0158
204.000	-.0199
205.000	-.0471
206.000	-.0602
211.000	-.0441
212.000	-.0350
213.000	-.0360
214.000	-.0188
215.000	-.0390
216.000	-.0562
221.000	-.0340
222.000	-.0219
223.000	-.0410
224.000	-.0400
225.000	-.0431
226.000	-.0390

BETA (5) = 1.000 ALPHA (1) = .000 Q(PSF) = 42.827 PO = 2116.5 RUN NO = 72.000

SECTION (1)MAIN LND GR STRT DEPENDENT VARIABLE CP

DUMMY 1.0000

TAP	
201.000	-.1841
202.000	-.1791
203.000	-.1609
204.000	-.2002
205.000	-.1952
206.000	-.2133
211.000	-.1801
212.000	-.0420
213.000	-.1851
214.000	-.1821
215.000	-.1861
216.000	-.0692
221.000	-.1841
222.000	-.1660
223.000	-.1770
224.000	-.1760
225.000	-.1760
226.000	-.1770

0A163B MAIN GEAR S-TRUT (RFPW0B)

BETA (5) = 1.000 ALPHA (2) = 2.060 Q(PSF) = 42.92 PO = 2116.5 RUN NO = 72.000

SECTION (1)MAIN LND GR STRT DEPENDENT VARIABLE CP

DUMMY 1.0000

TAP	
201.000	-.1492
202.000	-.1320
203.000	-.1128
204.000	-.1290
205.000	-.1441
206.000	-.1623
211.000	-.1351
212.000	-.0492
213.000	-.1361
214.000	-.1199
215.000	-.1421
216.000	-.0775
221.000	-.1431
222.000	-.1128
223.000	-.1310
224.000	-.1290
225.000	-.1310
226.000	-.1300

BETA (5) = 1.000 ALPHA (3) = 4.140 Q(PSF) = 42.827 PO = 2116.5 RUN NO = 72.000

SECTION (1)MAIN LND GR STRT DEPENDENT VARIABLE CP

DUMMY 1.0000

TAP	
201.000	-.0934
202.000	-.0853
203.000	-.0591
204.000	-.0732
205.000	-.0904
206.000	-.1065
211.000	-.0873
212.000	-.0440
213.000	-.0873
214.000	-.0541
215.000	-.0863
216.000	-.0732
221.000	-.0773
222.000	-.0611
223.000	-.0873
224.000	-.0863
225.000	-.0894
226.000	-.0843

OA163B MAIN GEAR STRUT (RFPW08)

BETA (5) = 1.000 ALPHA (4) = 6.200 Q(PSF) = 42.82" PO = 2116.5 RUN NO = 72.000

SECTION (1)MAIN LND GR STRT DEPENDENT VARIABLE CP

DUMMY 1.0000

TAP	
201.000	-.0459
202.000	-.0359
203.000	-.0168
204.000	-.0097
205.000	-.0399
206.000	-.0480
211.000	-.0379
212.000	-.0339
213.000	-.0268
214.000	-.0087
215.000	-.0318
216.000	-.0580
221.000	-.0218
222.000	-.0148
223.000	-.0309
224.000	-.0309
225.000	-.0299
226.000	-.0288

BETA (6) = 1.990 ALPHA (1) = .000 Q(PSF) = 42.890 PO = 2116.5 RUN NO = 73.000

SECTION (1)MAIN LND GR STRT DEPENDENT VARIABLE CP

DUMMY 1.0000

TAP	
201.000	-.1775
202.000	-.1675
203.000	-.1494
204.000	-.1785
205.000	-.1866
206.000	-.2036
211.000	-.1695
212.000	-.0389
213.000	-.1755
214.000	-.1675
215.000	-.1795
216.000	-.0680
221.000	-.1755
222.000	-.1544
223.000	-.1655
224.000	-.1675
225.000	-.1675
226.000	-.1655

OA163B MAIN GEAR STRUT (RFPW0B)

BETA (6) = 1.990 ALPHA (2) = 2.070 Q(PSF) = 42.890 PO = 2116.5 RUN NO = 73.000

SECTION (1)MAIN LND GR STRT DEPENDENT VARIABLE CP

DUMMY 1.0000

TAP	
201.000	-.1347
202.000	-.1236
203.000	-.0944
204.000	-.1136
205.000	-.1357
206.000	-.1498
211.000	-.1247
212.000	-.0440
213.000	-.1257
214.000	-.0954
215.000	-.1337
216.000	-.0763
221.000	-.1257
222.000	-.0954
223.000	-.1216
224.000	-.1206
225.000	-.1236
226.000	-.1216

BETA (6) = 1.980 ALPHA (3) = 4.130 Q(PSF) = 42.890 PO = 2116.5 RUN NO = 73.000

SECTION (1)MAIN LND GR STRT DEPENDENT VARIABLE CP

DUMMY 1.0000

TAP	
201.000	-.0672
202.000	-.0731
203.000	-.0520
204.000	-.0570
205.000	-.0801
206.000	-.0932
211.000	-.0791
212.000	-.0399
213.000	-.0741
214.000	-.0459
215.000	-.0721
216.000	-.0711
221.000	-.0681
222.000	-.0500
223.000	-.0761
224.000	-.0761
225.000	-.0801
226.000	-.0721

0A163B MAIN GEAR STRUT (RFPW08)

BETA (6) = 1.980 ALPHA (4) = 6.200 Q(PSF) = 42.89) PO = 2116.5 RUN NO = 73.000

SECTION (1)MAIN LND GR STRT DEPENDENT VARIABLE CP

DUMMY 1.0000

TAP	
201.000	-.0400
202.000	-.0319
203.000	-.0047
204.000	.0042
205.000	-.0329
206.000	-.0359
211.000	-.0289
212.000	-.0299
213.000	-.0208
214.000	.0002
215.000	-.0229
216.000	-.0551
221.000	-.0178
222.000	-.0168
223.000	-.0188
224.000	-.0178
225.000	-.0168
226.000	-.0208

BETA (7) = 5.010 ALPHA (1) = .030 Q(PSF) = 42.820 PO = 2116.5 RUN NO = 74.000

SECTION (1)MAIN LND GR STRT DEPENDENT VARIABLE CP

DUMMY 1.0000

TAP	
201.000	-.1525
202.000	-.1455
203.000	-.1163
204.000	-.1294
205.000	-.1566
206.000	-.1706
211.000	-.1475
212.000	-.0299
213.000	-.1505
214.000	-.1133
215.000	-.1555
216.000	-.0560
221.000	-.1425
222.000	-.1143
223.000	-.1455
224.000	-.1435
225.000	-.1485
226.000	-.1405

OA163B MAIN GEAR STRUT (RFPW0B)

BETA (7) = 5.020 ALPHA (2) = 2.080 Q(PSF) = 42.820 PO = 2116.5 RUN NO = 74.000

SECTION (1)MAIN LND GR STRT DEPENDENT VARIABLE CP

DUMMY 1.0000

TAP	
201.000	-.1153
202.000	-.1022
203.000	-.0691
204.000	-.0781
205.000	-.1093
206.000	-.1253
211.000	-.1052
212.000	-.0349
213.000	-.1022
214.000	-.0670
215.000	-.1032
216.000	-.0620
221.000	-.0962
222.000	-.0721
223.000	-.1062
224.000	-.1022
225.000	-.1093
226.000	-.1032

BETA (7) = 5.020 ALPHA (3) = 4.120 Q(PSF) = 42.829 PO = 2116.5 RUN NO = 74.000

SECTION (1)MAIN LND GR STRT DEPENDENT VARIABLE CP

DUMMY 1.0000

TAP	
201.000	-.0633
202.000	-.0502
203.000	-.0239
204.000	-.0290
205.000	-.0573
206.000	-.0764
211.000	-.0593
212.000	-.0290
213.000	-.0512
214.000	-.0270
215.000	-.0512
216.000	-.0583
221.000	-.0461
222.000	-.0280
223.000	-.0532
224.000	-.0532
225.000	-.0583
226.000	-.0542

OA163B MAIN GEAR STRUT (RFPH0B)

BETA (7) = 5.010 ALPHA (4) = 6.200 Q(PSF) = 42.820 PO = 2116.5 RUN NO = 74.000

SECTION (1)MAIN LND GR STRT DEPENDENT VARIABLE CP

DUMMY 1.0000

TAP	
201.000	-.0148
202.000	.0012
203.000	.0154
204.000	.0406
205.000	-.0128
206.000	-.0108
211.000	-.0058
212.000	-.0159
213.000	.0002
214.000	.0113
215.000	-.0068
216.000	-.0421
221.000	.0022
222.000	.0012
223.000	.0032
224.000	.0022
225.000	.0053
226.000	.0022

OA163B MAIN GEAR STRUT (RFPW09) (27 APR 77)

REFERENCE DATA

SREF = 2690.0000 SQ.FT. XMRP = 1076.7000 IN. XO
LREF = 474.8100 INCHES YMRP = .0000 IN. YO
BREF = 936.6800 INCHES ZMRP = 375.0000 IN. ZO
SCALE = .0405

PARAMETRIC DATA

SPDBRK =	25.000	BDFLAP =	.000
ELV-L =	.000	ELV-R =	.000
PHI-N =	66.000	THETAN =	108.000
PHI-ML =	32.200	THETML =	5.000
PHI-MR =	36.000	THETMR =	5.600

BETA (1) = -5.030 ALPHA (1) = .000 Q(PSF) = 42.795 PO = 2113.0 RUN NO = 75.000

SECTION (1)MAIN LND GR STRT DEPENDENT VARIABLE CP

DUMMY 1.0000

TAP	
201.000	-.2450
202.000	-.2500
203.000	-.2510
204.000	-.2772
205.000	-.2501
206.000	-.2912
211.000	-.2490
212.000	-.1304
213.000	-.2550
214.000	-.2560
215.000	-.2550
216.000	-.0902
221.000	-.2570
222.000	-.2530
223.000	-.2520
224.000	-.2520
225.000	-.2510
226.000	-.2480

BETA (1) = -5.030 ALPHA (2) = 2.080 Q(PSF) = 42.795 PO = 2113.0 RUN NO = 75.000

SECTION (1)MAIN LND GR STRT DEPENDENT VARIABLE CP

DUMMY 1.0000

TAP	
201.000	-.2022
202.000	-.1972
203.000	-.1912
204.000	-.2264
205.000	-.2073
206.000	-.2355
211.000	-.1972
212.000	-.1236
213.000	-.2032
214.000	-.1992
215.000	-.2012

OA163B MAIN GEAR STRUT (RFPW09)

BETA (1) = -5.030 ALPHA (2) = 2.080

SECTION (1)MAIN LND GR STRT DEPENDENT VARIABLE CP

DUMMY 1.0000

TAP	
216.000	-.0995
221.000	-.2012
222.000	-.1982
223.000	-.1992
224.000	-.1982
225.000	-.2002
226.000	-.1962

BETA (1) = -5.040 ALPHA (3) = 4.130 Q(PSF) = 42.795 PO = 2113.0 RUN NO = 75.000

SECTION (1)MAIN LND GR STRT DEPENDENT VARIABLE CP

DUMMY 1.0000

TAP	
201.000	-.1499
202.000	-.1429
203.000	-.1338
204.000	-.1701
205.000	-.1550
206.000	-.1812
211.000	-.1459
212.000	-.1157
213.000	-.1479
214.000	-.1409
215.000	-.1489
216.000	-.0945
221.000	-.1509
222.000	-.1378
223.000	-.1439
224.000	-.1449
225.000	-.1459
226.000	-.1449

OA163B MAIN GEAR STRUT (RFPW09)

BETA (1) = -5.030 ALPHA (4) = 6.220 Q(PSF) = 42.795 PO = 2113.0 RUN NO = 75.000

SECTION (1)MAIN LND GR STRT DEPENDENT VARIABLE CF

DUMMY 1.0000

TAP	
201.000	-.1121
202.000	-.0827
203.000	-.0716
204.000	-.0898
205.000	-.0949
206.000	-.1202
211.000	-.0868
212.000	-.1020
213.000	-.0949
214.000	-.0777
215.000	-.0918
216.000	-.0817
221.000	-.0928
222.000	-.0716
223.000	-.0898
224.000	-.0876
225.000	-.0908
226.000	-.0858

BETA (2) = -2.010 ALPHA (1) = .000 Q(PSF) = 42.933 PO = 2113.0 RUN NO = 76.000

SECTION (1)MAIN LND GR STRT DEPENDENT VARIABLE CP

DUMMY 1.0000

TAP	
201.000	-.2170
202.000	-.2160
203.000	-.2129
204.000	-.2440
205.000	-.2300
206.000	-.2560
211.000	-.2230
212.000	-.0868
213.000	-.2240
214.000	-.2210
215.000	-.2220
216.000	-.0738
221.000	-.2260
222.000	-.2149
223.000	-.2149
224.000	-.2180
225.000	-.2200
226.000	-.2139

OA163B MAIN GEAR STRUT (RFPW09)

BETA (2) = -2.010 ALPHA (2) = 2.080 Q(PSF) = 42.930 PO = 2113.0 RUN NO = 76.000

SECTION (1)MAIN LND GR STRT DEPENDENT VARIABLE CF

DUMMY 1.0000

TAP	
201.000	-.1617
202.000	-.1627
203.000	-.1496
204.000	-.1919
205.000	-.1778
206.000	-.2010
211.000	-.1637
212.000	-.0972
213.000	-.1667
214.000	-.1597
215.000	-.1677
216.000	-.0832
221.000	-.1718
222.000	-.1567
223.000	-.1637
224.000	-.1637
225.000	-.1647
226.000	-.1667

BETA (2) = -2.010 ALPHA (3) = 4.140 Q(PSF) = 42.930 PO = 2113.0 RUN NO = 76.000

SECTION (1)MAIN LND GR STRT DEPENDENT VARIABLE CF

DUMMY 1.0000

TAP	
201.000	-.1347
202.000	-.1085
203.000	-.0944
204.000	-.1115
205.000	-.1216
206.000	-.1418
211.000	-.1115
212.000	-.0793
213.000	-.1166
214.000	-.1075
215.000	-.1186
216.000	-.0753
221.000	-.1176
222.000	-.0944
223.000	-.1105
224.000	-.1126
225.000	-.1105
226.000	-.1085

OA163B MAIN GEAR STRUT (RFPW09)

BETA (2) = -2.010 ALPHA (4) = 6.200 Q(PSF) = 42.930 PO = 2113.0 RUN NO = 76.000

SECTION (1)MAIN LND GR STRT DEPENDENT VARIABLE CP

DUMMY 1.0000

TAP	
201.000	-.0732
202.000	-.0570
203.000	-.0389
204.000	-.0520
205.000	-.0541
206.000	-.0862
211.000	-.0651
212.000	-.0671
213.000	-.0601
214.000	-.0369
215.000	-.0601
216.000	-.0611
221.000	-.0601
222.000	-.0420
223.000	-.0631
224.000	-.0621
225.000	-.0661
226.000	-.0601

BETA (3) = -1.020 ALPHA (1) = .000 Q(PSF) = 42.845 PO = 2112.9 RUN NO = 77.000

SECTION (1)MAIN LND GR STRT DEPENDENT VARIABLE CP

DUMMY 1.0000

TAP	
201.000	-.2035
202.000	-.2075
203.000	-.1954
204.000	-.2388
205.000	-.2237
206.000	-.2469
211.000	-.2146
212.000	-.0643
213.000	-.2136
214.000	-.2055
215.000	-.2136
216.000	-.0703
221.000	-.2156
222.000	-.2015
223.000	-.2065
224.000	-.2065
225.000	-.2065
226.000	-.2045

OA163B MAIN GEAR STRUT (RFPW09)

BETA (3) = -1.020 ALPHA (2) = 2.060 Q(PSF) = 42.845 PO = 2112.9 RUN NO = 77.000

SECTION (1)MAIN LND GR STRT DEPENDENT VARIABLE CP

DUMMY 1.0000

TAP	
201.000	-.1669
202.000	-.1538
203.000	-.1387
204.000	-.1720
205.000	-.1689
206.000	-.1891
211.000	-.1508
212.000	-.0662
213.000	-.1609
214.000	-.1538
215.000	-.1589
216.000	-.0803
221.000	-.1589
222.000	-.1387
223.000	-.1528
224.000	-.1518
225.000	-.1528
226.000	-.1518

BETA (3) = -1.020 ALPHA (3) = 4.140 Q(PSF) = 42.845 PO = 2112.9 RUN NO = 77.000

SECTION (1)MAIN LND GR STRT DEPENDENT VARIABLE CP

DUMMY 1.0000

TAP	
201.000	-.1194
202.000	-.1063
203.000	-.0811
204.000	-.0972
205.000	-.1123
206.000	-.1334
211.000	-.1083
212.000	-.0580
213.000	-.1073
214.000	-.0842
215.000	-.1103
216.000	-.0751
221.000	-.1133
222.000	-.0801
223.000	-.1053
224.000	-.1043
225.000	-.1043
226.000	-.1033

0A163B MAIN GEAR STRUT (RFPW09)

BETA (3) = -1.020 ALPHA (4) = 6.210 Q(PSF) = 42.845 PO = 2112.9 RUN NO = 77.000

SECTION (1)MAIN LND GR STRT DEPENDENT VARIABLE CP

DUMMY 1.0000

TAP	
201.000	-.0621
202.000	-.0470
203.000	-.0319
204.000	-.0380
205.000	-.0561
206.000	-.0752
211.000	-.0571
212.000	-.0500
213.000	-.0490
214.000	-.0269
215.000	-.0490
216.000	-.0601
221.000	-.0450
222.000	-.0309
223.000	-.0541
224.000	-.0521
225.000	-.0551
226.000	-.0490

BETA (4) = .000 ALPHA (1) = .000 Q(PSF) = 42.915 PO = 2112.9 RUN NO = 78.000

SECTION (1)MAIN LND GR STRT DEPENDENT VARIABLE CP

DUMMY 1.0000

TAP	
201.000	-.1885
202.000	-.1935
203.000	-.1785
204.000	-.2226
205.000	-.2086
206.000	-.2317
211.000	-.1955
212.000	-.0509
213.000	-.1995
214.000	-.1915
215.000	-.1985
216.000	-.0690
221.000	-.1995
222.000	-.1835
223.000	-.1925
224.000	-.1925
225.000	-.1935
226.000	-.1905

OA163B MAIN GEAR STRUT (RFPW09)

BETA (4) = .000 ALPHA (2) = 2.090 Q(PSF) = 42.915 PO = 2112.9 RUN NO = 78.000

SECTION (1)MAIN LND GR STRT DEPENDENT VARIABLE C>

DUMMY 1.0000

TAP	
201.000	-.1620
202.000	-.1398
203.000	-.1227
204.000	-.1448
205.000	-.1559
206.000	-.1751
211.000	-.1408
212.000	-.0541
213.000	-.1479
214.000	-.1368
215.000	-.1509
216.000	-.0793
221.000	-.1489
222.000	-.1247
223.000	-.1388
224.000	-.1398
225.000	-.1408
226.000	-.1378

BETA (4) = .000 ALPHA (3) = 4.140 Q(PSF) = 42.915 PO = 2112.9 RUN NO = 78.000

SECTION (1)MAIN LND GR STRT DEPENDENT VARIABLE C>

DUMMY 1.0000

TAP	
201.000	-.1062
202.000	-.0961
203.000	-.0700
204.000	-.0861
205.000	-.1052
206.000	-.1202
211.000	-.1001
212.000	-.0479
213.000	-.0981
214.000	-.0660
215.000	-.1001
216.000	-.0750
221.000	-.0941
222.000	-.0690
223.000	-.0961
224.000	-.0971
225.000	-.1011
226.000	-.0961

OA163B MAIN GEAR STRUT (RFPW09)

BETA (4) = .000 ALPHA (4) = 6.210 Q(PSF) = 42.515 PO = 2112.9 RUN NO = 78.000

SECTION (1)MAIN LND GR STRT DEPENDENT VARIABLE CP

DUMMY 1.0000

TAP	
201.000	-.0550
202.000	-.0409
203.000	-.0248
204.000	-.0238
205.000	-.0480
206.000	-.0630
211.000	-.0470
212.000	-.0359
213.000	-.0359
214.000	-.0158
215.000	-.0389
216.000	-.0570
221.000	-.0339
222.000	-.0238
223.000	-.0419
224.000	-.0409
225.000	-.0439
226.000	-.0379

BETA (5) = 1.000 ALPHA (1) = -.010 Q(PSF) = 42.792 PO = 2112.9 RUN NO = 79.000

SECTION (1)MAIN LND GR STRT DEPENDENT VARIABLE CP

DUMMY 1.0000

TAP	
201.000	-.1845
202.000	-.1785
203.000	-.1644
204.000	-.2016
205.000	-.1955
206.000	-.2136
211.000	-.1785
212.000	-.0328
213.000	-.1855
214.000	-.1815
215.000	-.1895
216.000	-.0579
221.000	-.1865
222.000	-.1704
223.000	-.1775
224.000	-.1775
225.000	-.1785
226.000	-.1785

OA1638 MAIN GEAR STRUT (RFPH09)

BETA (5) = 1.000 ALPHA (2) = 2.070 Q(PSF) = 42.792 PO = 2112.9 RUN NO = 79.000

SECTION (1)MAIN LND GR STRT DEPENDENT VARIABLE CP

DUMMY 1.0000

TAP	
201.000	-.1466
202.000	-.1294
203.000	-.1081
204.000	-.1274
205.000	-.1416
206.000	-.1608
211.000	-.1335
212.000	-.0362
213.000	-.1355
214.000	-.1172
215.000	-.1385
216.000	-.0696
221.000	-.1416
222.000	-.1101
223.000	-.1314
224.000	-.1294
225.000	-.1284
226.000	-.1294

BETA (5) = 1.000 ALPHA (3) = 4.120 Q(PSF) = 42.792 PO = 2112.9 RUN NO = 79.000

SECTION (1)MAIN LND GR STRT DEPENDENT VARIABLE CP

DUMMY 1.0000

TAP	
201.000	-.0956
202.000	-.0855
203.000	-.0612
204.000	-.0703
205.000	-.0885
206.000	-.1077
211.000	-.0885
212.000	-.0330
213.000	-.0855
214.000	-.0562
215.000	-.0865
216.000	-.0663
221.000	-.0794
222.000	-.0623
223.000	-.0855
224.000	-.0865
225.000	-.0895
226.000	-.0834

OA163B MAIN GEAF STRUT (RFPW09)

BETA (5) = 1.000 ALPHA (4) = 6.190 Q(PSF) = 42.792 PO = 2112.9 RUN NO = 79.000

SECTION (1)MAIN LND GR STRT DEPENDENT VARIABLE CP

DUMMY 1.0000

TAP	
201.000	-.0440
202.000	-.0370
203.000	-.0158
204.000	-.0118
205.000	-.0400
206.000	-.0470
211.000	-.0380
212.000	-.0198
213.000	-.0289
214.000	-.0078
215.000	-.0289
216.000	-.0480
221.000	-.0208
222.000	-.0158
223.000	-.0309
224.000	-.0279
225.000	-.0319
226.000	-.0289

BETA (6) = 1.990 ALPHA (1) = .000 Q(PSF) = 42.855 PO = 2112.9 RUN NO = 80.000

SECTION (1)MAIN LND GR STRT DEPENDENT VARIABLE CP

DUMMY 1.0000

TAP	
201.000	-.1794
202.000	-.1674
203.000	-.1503
204.000	-.1764
205.000	-.1874
206.000	-.2025
211.000	-.1684
212.000	-.0188
213.000	-.1754
214.000	-.1674
215.000	-.1804
216.000	-.0720
221.000	-.1774
222.000	-.1623
223.000	-.1654
224.000	-.1654
225.000	-.1664
226.000	-.1644

OA163B MAIN GEAR STRUT (RFPW09)

BETA (6) = 1.990 ALPHA (2) = 2.060 Q(PSF) = 42.855 PO = 2112.9 RUN NO = 80.000

SECTION (1)MAIN LND GR STRT DEPENDENT VARIABLE CP

DUMMY 1.0000

TAP	
201.000	-.1368
202.000	-.1227
203.000	-.0985
204.000	-.1146
205.000	-.1328
206.000	-.1509
211.000	-.1247
212.000	-.0209
213.000	-.1287
214.000	-.0975
215.000	-.1328
216.000	-.0793
221.000	-.1267
222.000	-.0955
223.000	-.1247
224.000	-.1237
225.000	-.1237
226.000	-.1217

BETA (6) = 1.990 ALPHA (3) = 4.120 Q(PSF) = 42.855 PO = 2112.9 RUN NO = 81.000

SECTION (1)MAIN LND GR STRT DEPENDENT VARIABLE CP

DUMMY 1.0000

TAP	
201.000	-.0864
202.000	-.0743
203.000	-.0511
204.000	-.0562
205.000	-.0793
206.000	-.0955
211.000	-.0783
212.000	-.0158
213.000	-.0753
214.000	-.0461
215.000	-.0723
216.000	-.0713
221.000	-.0683
222.000	-.0521
223.000	-.0763
224.000	-.0733
225.000	-.0804
226.000	-.0753

OA163B MAIN GEAR STRUT (RFPW09)

BETA (6) = 1.990 ALPHA (4) = 6.210 Q(PSF) = 42.655 PO = 2112.9 RUN NO = 80.000

SECTION (1)MAIN LND GR STRT DEPENDENT VARIABLE CP

DUMMY 1.0000

TAP	
201.000	-.0360
202.000	-.0340
203.000	-.0027
204.000	.0052
205.000	-.0340
206.000	-.0340
211.000	-.0259
212.000	-.0067
213.000	-.0178
214.000	.0002
215.000	-.0219
216.000	-.0521
221.000	-.0178
222.000	-.0138
223.000	-.0188
224.000	-.0158
225.000	-.0188
226.000	-.0188

BETA (7) = 5.020 ALPHA (1) = .000 Q(PSF) = 42.677 PO = 2113.0 RUN NO = 81.000

SECTION (1)MAIN LND GR STRT DEPENDENT VARIABLE CP

DUMMY 1.0000

TAP	
201.000	-.1529
202.000	-.1429
203.000	-.1179
204.000	-.1319
205.000	-.1549
206.000	-.1709
211.000	-.1469
212.000	-.0077
213.000	-.1519
214.000	-.1138
215.000	-.1559
216.000	-.0568
221.000	-.1429
222.000	-.1179
223.000	-.1449
224.000	-.1459
225.000	-.1469
226.000	-.1419

OA163B MAIN GEAR STRUT (RFPWDS)

BETA (7) = 5.020 ALPHA (2) = 2.060 Q(PSF) = 42.877 PO = 2113.0 RUN NO = 81.000

SECTION (1)MAIN LND GR STRT DEPENDENT VARIABLE CP

DUMMY 1.0000

TAP	
201.000	-.1126
202.000	-.1025
203.000	-.0712
204.000	-.0813
205.000	-.1075
206.000	-.1246
211.000	-.1055
212.000	-.0138
213.000	-.1055
214.000	-.0692
215.000	-.1045
216.000	-.0622
221.000	-.0954
222.000	-.0722
223.000	-.1056
224.000	-.1045
225.000	-.1105
226.000	-.1055

BETA (7) = 5.020 ALPHA (3) = 4.130 Q(PSF) = 42.877 PO = 2113.0 RUN NO = 81.000

SECTION (1)MAIN LND GR STRT DEPENDENT VARIABLE CP

DUMMY 1.0000

TAP	
201.000	-.0654
202.000	-.0523
203.000	-.0219
204.000	-.0280
205.000	-.0573
206.000	-.0745
211.000	-.0593
212.000	-.0088
213.000	-.0533
214.000	-.0290
215.000	-.0512
216.000	-.0543
221.000	-.0432
222.000	-.0260
223.000	-.0512
224.000	-.0512
225.000	-.0583
226.000	-.0462

OA163B MAIN GEAR STRUT (RFPW09)

BETA (7) = 5.020 ALPHA (4) = 6.200 Q(PSF) = 42.977 PO = 2113.0 RUN NO = 81.000

SECTION (1)MAIN LND GR STRT DEPENDENT VARIABLE CP

DUMMY 1.0000

TAP	
201.000	-.0178
202.000	-.0007
203.000	.0183
204.000	.0425
205.000	-.0128
206.000	-.0178
211.000	-.0057
212.000	.0093
213.000	.0062
214.000	.0143
215.000	-.0067
216.000	-.0329
221.000	.0012
222.000	.0042
223.000	.0042
224.000	.0042
225.000	.0012
226.000	.0002

OA163B MAIN GEAR STRUT (RFPWI0) (27 APR 77)

REFERENCE DATA

SREF =	2690.0000 SQ.FT.	XMRP =	1076.7000 IN.	XO	
LREF =	474.8100 INCHES	YMRP =	.0000 IN.	YO	
BREF =	936.6800 INCHES	ZMRP =	375.0000 IN.	ZO	
SCALE =	.0405				

PARAMETRIC DATA

SPDBRK =	25.000	BDFLAP =	.000
ELV-L =	.000	ELV-R =	.000
PHI-N =	66.000	THETAN =	108.000
PHI-ML =	32.200	THETML =	5.000
PHI-MR =	26.000	THETMR =	4.000

BETA (1) = -5.030 ALPHA (1) = .000 Q(PSF) = 42.382 PO = 2112.3 RUN NO = 83.000

SECTION (1)MAIN LND GR STRT DEPENDENT VARIABLE CP

DUMMY 1.0000

TAP	
201.000	-.2463
202.000	-.2483
203.000	-.2503
204.000	-.2765
205.000	-.2624
206.000	-.2896
211.000	-.2503
212.000	-.1064
213.000	-.2563
214.000	-.2553
215.000	-.2523
216.000	-.0832
221.000	-.2543
222.000	-.2533
223.000	-.2533
224.000	-.2533
225.000	-.2523
226.000	-.2483

BETA (1) = -5.040 ALPHA (2) = 2.080 Q(PSF) = 42.382 PO = 2112.3 RUN NO = 83.000

SECTION (1)MAIN LND GR STRT DEPENDENT VARIABLE CP

DUMMY 1.0000

TAP	
201.000	-.1962
202.000	-.1972
203.000	-.1931
204.000	-.2254
205.000	-.2073
206.000	-.2385
211.000	-.1992
212.000	-.1075
213.000	-.2022
214.000	-.1992
215.000	-.2012

OA163B MAIN GEAR STRUT (RFPW10)

BETA (1) = -5.040 ALPHA (2) = 2.080

SECTION (1)MAIN LND GR STRT DEPENDENT VARIABLE CP

DUMMY 1.0000

TAP	
216.000	-.0994
221.000	-.2022
222.000	-.1972
223.000	-.1972
224.000	-.1992
225.000	-.2002
226.000	-.1972

BETA (1) = -5.040 ALPHA (3) = 4.160 Q(PSF) = 42.882 PO = 2112.3 RUN NO = 83.000

SECTION (1)MAIN LND GR STRT DEPENDENT VARIABLE CP

DUMMY 1.0000

TAP	
201.000	-.1580
202.000	-.1448
203.000	-.1338
204.000	-.1700
205.000	-.1539
206.000	-.1832
211.000	-.1489
212.000	-.1005
213.000	-.1489
214.000	-.1428
215.000	-.1499
216.000	-.0955
221.000	-.1519
222.000	-.1388
223.000	-.1459
224.000	-.1459
225.000	-.1489
226.000	-.1479

OA163B MAIN GEAR STRUT (RFPW10)

BETA (1) = -5.040 ALPHA (4) = 6.210 Q(PSF) = 42.882 PO = 2112.3 RUN NO = 83.000

SECTION (1)MAIN LND GR STRT DEPENDENT VARIABLE CP

DUMMY 1.0000

TAP	
201.000	-.1151
202.000	-.0850
203.000	-.0729
204.000	-.0920
205.000	-.0940
206.000	-.1201
211.000	-.0880
212.000	-.0860
213.000	-.0950
214.000	-.0780
215.000	-.0940
216.000	-.0770
221.000	-.0940
222.000	-.0750
223.000	-.0890
224.000	-.0860
225.000	-.0920
226.000	-.0870

BETA (2) = -2.020 ALPHA (1) = .000 Q(PSF) = 42.935 PO = 2112.3 RUN NO = 84.000

SECTION (1)MAIN LND GR STRT DEPENDENT VARIABLE CP

DUMMY 1.0000

TAP	
201.000	-.2195
202.000	-.2185
203.000	-.2145
204.000	-.2456
205.000	-.2315
206.000	-.2566
211.000	-.2245
212.000	-.0850
213.000	-.2205
214.000	-.2175
215.000	-.2205
216.000	-.0830
221.000	-.2215
222.000	-.2135
223.000	-.2145
224.000	-.2175
225.000	-.2165
226.000	-.2155

OA163B MAIN GEAR STRUT (RFPW10)

BETA (2) = -2.020 ALPHA (2) = 2.070 Q(PSF) = 42.935 PO = 2112.3 RUN NO = 84.000

SECTION (1)MAIN LND GR STRT DEPENDENT VARIABLE CP

DUMMY 1.0000

TAP	
201.000	-.1621
202.000	-.1631
203.000	-.1501
204.000	-.1932
205.000	-.1792
206.000	-.2002
211.000	-.1641
212.000	-.0819
213.000	-.1661
214.000	-.1591
215.000	-.1661
216.000	-.0929
221.000	-.1692
222.000	-.1551
223.000	-.1641
224.000	-.1641
225.000	-.1641
226.000	-.1651

BETA (2) = -2.010 ALPHA (3) = 4.120 Q(PSF) = 42.935 PO = 2112.3 RUN NO = 84.000

SECTION (1)MAIN LND GR STRT DEPENDENT VARIABLE CP

DUMMY 1.0000

TAP	
201.000	-.1379
202.000	-.1107
203.000	-.0935
204.000	-.1097
205.000	-.1187
206.000	-.1409
211.000	-.1107
212.000	-.0754
213.000	-.1157
214.000	-.1026
215.000	-.1167
216.000	-.0875
221.000	-.1197
222.000	-.0945
223.000	-.1107
224.000	-.1097
225.000	-.1147
226.000	-.1097

OA163B MAIN GEAR STRUT (RFPN10)

BETA (2) = -2.010 ALPHA (4) = 6.200 Q(PSF) = 42.935 PO = 2112.3 RUN NO = 84.000

SECTION (1)MAIN LND GR STRT DEPENDENT VARIABLE CP

DUMMY 1.0000

TAP	
201.000	-.0731
202.000	-.0560
203.000	-.0389
204.000	-.0510
205.000	-.0650
206.000	-.0872
211.000	-.0661
212.000	-.0590
213.000	-.0600
214.000	-.0369
215.000	-.0570
216.000	-.0701
221.000	-.0580
222.000	-.0419
223.000	-.0630
224.000	-.0630
225.000	-.0661
226.000	-.0590

BETA (3) = -.990 ALPHA (1) = .000 Q(PSF) = 42.877 PO = 2112.3 RUN NO = 85.000

SECTION (1)MAIN LND GR STRT DEPENDENT VARIABLE CP

DUMMY 1.0000

TAP	
201.000	-.2058
202.000	-.2048
203.000	-.1948
204.000	-.2370
205.000	-.2219
206.000	-.2461
211.000	-.2129
212.000	-.0661
213.000	-.2109
214.000	-.2048
215.000	-.2109
216.000	-.0781
221.000	-.2129
222.000	-.2008
223.000	-.2038
224.000	-.2058
225.000	-.2038
226.000	-.2038

OA163B MAIN GEAR STRUT (RFPW10)

BETA (3) = -.990 ALPHA (2) = 2.070 Q(PSF) = 42.877 PO = 2112.3 RUN NO = 85.000

SECTION (1)MAIN LND GR STRT DEPENDENT VARIABLE CP

DUMMY 1.0000

TAP	
201.000	-.1638
202.000	-.1497
203.000	-.1356
204.000	-.1658
205.000	-.1648
206.000	-.1849
211.000	-.1477
212.000	-.0651
213.000	-.1588
214.000	-.1517
215.000	-.1598
216.000	-.0913
221.000	-.1588
222.000	-.1386
223.000	-.1507
224.000	-.1517
225.000	-.1537
226.000	-.1507

BETA (3) = -.990 ALPHA (3) = 4.130 Q(PSF) = 42.877 PO = 2112.3 RUN NO = 85.000

SECTION (1)MAIN LND GR STRT DEPENDENT VARIABLE CP

DUMMY 1.0000

TAP	
201.000	-.1206
202.000	-.1065
203.000	-.0803
204.000	-.0974
205.000	-.1135
206.000	-.1357
211.000	-.1085
212.000	-.0611
213.000	-.1045
214.000	-.0823
215.000	-.1115
216.000	-.0883
221.000	-.1065
222.000	-.0803
223.000	-.1085
224.000	-.1045
225.000	-.1095
226.000	-.1025

0A163B MAIN GEAR STRUT (RFPWI0)

BETA (3) = -1.000 ALPHA (4) = 6.220 Q(PSF) = 42.877 PO = 2112.3 RUN NO = 85.000

SECTION (1)MAIN LND GR STRT DEPENDENT VARIABLE CP

DUMMY 1.0000

TAP	
201.000	-.0621
202.000	-.0490
203.000	-.0329
204.000	-.0369
205.000	-.0571
206.000	-.0742
211.000	-.0581
212.000	-.0510
213.000	-.0510
214.000	-.0289
215.000	-.0480
216.000	-.0701
221.000	-.0450
222.000	-.0339
223.000	-.0530
224.000	-.0561
225.000	-.0550
226.000	-.0500

BETA (4) = -.010 ALPHA (1) = .000 Q(PSF) = 42.892 PO = 2112.3 RUN NO = 86.000

SECTION (1)MAIN LND GR STRT DEPENDENT VARIABLE CP

DUMMY 1.0000

TAP	
201.000	-.1869
202.000	-.1899
203.000	-.1778
204.000	-.2231
205.000	-.2080
206.000	-.2291
211.000	-.1939
212.000	-.0480
213.000	-.1989
214.000	-.1919
215.000	-.1969
216.000	-.0732
221.000	-.1999
222.000	-.1828
223.000	-.1919
224.000	-.1919
225.000	-.1929
226.000	-.1919

OA163B MAIN GEAR STRUT (RFPH10)

BETA (4) = -.010 ALPHA (2) = 2.060 Q(PSF) = 42.892 PO = 2112.3 RUN NO = 86.000

SECTION (1)MAIN LND GR STRT DEPENDENT VARIABLE CP

DUMMY 1.0000

TAP	
201.000	-.1598
202.000	-.1356
203.000	-.1195
204.000	-.1437
205.000	-.1497
206.000	-.1689
211.000	-.1376
212.000	-.0450
213.000	-.1507
214.000	-.1376
215.000	-.1467
216.000	-.0893
221.000	-.1507
222.000	-.1286
223.000	-.1407
224.000	-.1407
225.000	-.1407
226.000	-.1366

BETA (4) = -.010 ALPHA (3) = 4.120 Q(PSF) = 42.892 PO = 2112.3 RUN NO = 86.000

SECTION (1)MAIN LND GR STRT DEPENDENT VARIABLE CP

DUMMY 1.0000

TAP	
201.000	-.1042
202.000	-.0971
203.000	-.0690
204.000	-.0851
205.000	-.1012
206.000	-.1233
211.000	-.0992
212.000	-.0519
213.000	-.1002
214.000	-.0650
215.000	-.1002
216.000	-.0831
221.000	-.0911
222.000	-.0690
223.000	-.0971
224.000	-.0971
225.000	-.1012
226.000	-.0941

OA163B MAIN GEAR STRUT (RFPW10)

BETA (4) = -.010 ALPHA (4) = 6.190 Q(PSF) = 42.892 PO = 2112.3 RUN NO = 86.000

SECTION (1)MAIN LND GR STRT DEPENDENT VARIABLE CP

DUMMY 1.0000

TAP	
201.000	-.0551
202.000	-.0440
203.000	-.0229
204.000	-.0229
205.000	-.0460
206.000	-.0641
211.000	-.0470
212.000	-.0440
213.000	-.0390
214.000	-.0176
215.000	-.0370
216.000	-.0682
221.000	-.0319
222.000	-.0229
223.000	-.0420
224.000	-.0420
225.000	-.0450
226.000	-.0380

BETA (5) = .990 ALPHA (1) = .000 Q(PSF) = 42.887 PO = 2112.3 RUN NO = 87.000

SECTION (1)MAIN LND GR STRT DEPENDENT VARIABLE CP

DUMMY 1.0000

TAP	
201.000	-.1839
202.000	-.1789
203.000	-.1648
204.000	-.1980
205.000	-.1970
206.000	-.2141
211.000	-.1799
212.000	-.0490
213.000	-.1849
214.000	-.1819
215.000	-.1879
216.000	-.0782
221.000	-.1839
222.000	-.1668
223.000	-.1768
224.000	-.1778
225.000	-.1768
226.000	-.1758

OA163B MAIN GEAR STRUT (RFPW10)

BETA (5) = .990 ALPHA (2) = 2.069 Q(PSF) = 42.887 PO = 2112.3 RUN NO = 87.000

SECTION (1)MAIN LND GR STRT DEPENDENT VARIABLE CP

DUMMY 1.0000

TAP	
201.000	-.1476
202.000	-.1305
203.000	-.1104
204.000	-.1275
205.000	-.1416
206.000	-.1617
211.000	-.1345
212.000	-.0520
213.000	-.1365
214.000	-.1184
215.000	-.1416
216.000	-.0862
221.000	-.1416
222.000	-.1104
223.000	-.1305
224.000	-.1285
225.000	-.1305
226.000	-.1305

BETA (5) = .990 ALPHA (3) = 4.120 Q(PSF) = 42.887 PO = 2112.3 RUN NO = 87.000

SECTION (1)MAIN LND GR STRT DEPENDENT VARIABLE CP

DUMMY 1.0000

TAP	
201.000	-.0935
202.000	-.0824
203.000	-.0602
204.000	-.0703
205.000	-.0894
206.000	-.1076
211.000	-.0864
212.000	-.0471
213.000	-.0864
214.000	-.0551
215.000	-.0834
216.000	-.0804
221.000	-.0773
222.000	-.0602
223.000	-.0874
224.000	-.0854
225.000	-.0814
226.000	-.0844

OA163B MAIN GEAR STRUT (RFPW10)

BETA (5) = .990 ALPHA (4) = 6.190 Q(PSF) = 42.887 PO = 2112.3 RUN NO = 87.000

SECTION (1)MAIN LND GR STRT DEPENDENT VARIABLE CP

DUMMY 1.0000

TAP	
201.000	-.0449
202.000	-.0389
203.000	-.0148
204.000	-.0107
205.000	-.0419
206.000	-.0489
211.000	-.0378
212.000	-.0399
213.000	-.0278
214.000	-.0087
215.000	-.0278
216.000	-.0660
221.000	-.0218
222.000	-.0148
223.000	-.0278
224.000	-.0288
225.000	-.0298
226.000	-.0268

BETA (6) = 1.990 ALPHA (1) = .000 Q(PSF) = 42.840 PO = 2112.3 RUN NO = 88.000

SECTION (1)MAIN LND GR STRT DEPENDENT VARIABLE CP

DUMMY 1.0000

TAP	
201.000	-.1784
202.000	-.1684
203.000	-.1493
204.000	-.1784
205.000	-.1865
206.000	-.2005
211.000	-.1674
212.000	-.0429
213.000	-.1744
214.000	-.1664
215.000	-.1784
216.000	-.0710
221.000	-.1754
222.000	-.1523
223.000	-.1644
224.000	-.1644
225.000	-.1664
226.000	-.1634

OA163B MAIN GEAR STRUT (RFPN10)

BETA (6) = 1.990 ALPHA (2) = 2.070 Q(PSF) = 42.840 PO = 2112.3 RUN NO = 88.000

SECTION (1)MAIN LND GR STRT DEPENDENT VARIABLE CP

DUMMY 1.0000

TAP	
201.000	-.1371
202.000	-.1239
203.000	-.0967
204.000	-.1128
205.000	-.1340
206.000	-.1502
211.000	-.1259
212.000	-.0482
213.000	-.1280
214.000	-.0946
215.000	-.1330
216.000	-.0805
221.000	-.1239
222.000	-.0956
223.000	-.1239
224.000	-.1219
225.000	-.1259
226.000	-.1199

BETA (6) = 1.990 ALPHA (3) = 4.120 Q(PSF) = 42.840 PO = 2112.3 RUN NO = 88.000

SECTION (1)MAIN LND GR STRT DEPENDENT VARIABLE CP

DUMMY 1.0000

TAP	
201.000	-.0874
202.000	-.0763
203.000	-.0491
204.000	-.0552
205.000	-.0784
206.000	-.0975
211.000	-.0784
212.000	-.0441
213.000	-.0743
214.000	-.0471
215.000	-.0733
216.000	-.0743
221.000	-.0673
222.000	-.0501
223.000	-.0753
224.000	-.0733
225.000	-.0814
226.000	-.0733

0A163B MAIN GEAR STRUT (RFPW10)

BETA (6) = 1.990 ALPHA (4) = 6.220 Q(PSF) = 42.840 PO = 2112.3 RUN NO = 88.000

SECTION (1)MAIN LND GR STRT DEPENDENT VARIABLE CP

DUMMY 1.0000

TAP	
201.000	-.0400
202.000	-.0309
203.000	-.0047
204.000	.0073
205.000	-.0339
206.000	-.0380
211.000	-.0279
212.000	-.0349
213.000	-.0188
214.000	-.0017
215.000	-.0239
216.000	-.0591
221.000	-.0158
222.000	-.0138
223.000	-.0178
224.000	-.0208
225.000	-.0198
226.000	-.0178

BETA (7) = 5.020 ALPHA (1) = .000 Q(PSF) = 42.755 PO = 2112.3 RUN NO = 89.000

SECTION (1)MAIN LND GR STRT DEPENDENT VARIABLE CP

DUMMY 1.0000

TAP	
201.000	-.1528
202.000	-.1468
203.000	-.1166
204.000	-.1317
205.000	-.1579
206.000	-.1720
211.000	-.1488
212.000	-.0380
213.000	-.1518
214.000	-.1145
215.000	-.1559
216.000	-.0652
221.000	-.1448
222.000	-.1176
223.000	-.1448
224.000	-.1458
225.000	-.1486
226.000	-.1417

OA163B MAIN GEAR STRUT (RFPWID)

BETA (7) = 5.020 ALPHA (2) = 2.060 Q(PSF) = 42.755 PO = 2112.3 RUN NO = 89.000

SECTION (1)MAIN LND GR STRT DEPENDENT VARIABLE CP

DUMMY 1.0000

TAP	
201.000	-.1138
202.000	-.1037
203.000	-.0714
204.000	-.0805
205.000	-.1098
206.000	-.1279
211.000	-.1067
212.000	-.0411
213.000	-.1077
214.000	-.0724
215.000	-.1047
216.000	-.0724
221.000	-.0976
222.000	-.0714
223.000	-.1037
224.000	-.1087
225.000	-.1168
226.000	-.1118

BETA (7) = 5.020 ALPHA (3) = 4.120 Q(PSF) = 42.755 PO = 2112.3 RUN NO = 89.000

SECTION (1)MAIN LND GR STRT DEPENDENT VARIABLE CP

DUMMY 1.0000

TAP	
201.000	-.0663
202.000	-.0522
203.000	-.0209
204.000	-.0279
205.000	-.0582
206.000	-.0774
211.000	-.0592
212.000	-.0370
213.000	-.0522
214.000	-.0269
215.000	-.0511
216.000	-.0673
221.000	-.0451
222.000	-.0249
223.000	-.0481
224.000	-.0461
225.000	-.0572
226.000	-.0592

OA163B MAIN GEAR STRUT (RFPW10)

ZETA (7) = 5.020 ALPHA (4) = 6.200 Q(PSF) = 12.755 PO = 2112.3 RUN NO = 89.000

SECTION (1)MAIN LND GR STRT DEPENDENT VARIABLE CP

DUMMY 1.0000

TAP	
201.000	-.0189
202.000	.0002
203.000	.0144
204.000	.0437
205.000	-.0078
206.000	-.0118
211.000	-.0037
212.000	-.0280
213.000	-.0037
214.000	.0083
215.000	-.0078
216.000	-.0483
221.000	.0022
222.000	.0002
223.000	.0032
224.000	.0053
225.000	.0053
226.000	.0002

OA163B MAIN GEAR STRUT (RFPWI1) (27 APR 77)

REFERENCE DATA

SREF =	2690.0000 SQ.FT.	XMRP =	1076.7000 IN. XO		
LREF =	474.8100 INCHES	YMRP =	.0000 IN. YO		
BREF =	936.6800 INCHES	ZMRP =	375.0000 IN. ZO		
SCALE =	.0405				

PARAMETRIC DATA

SPDBRK =	25.000	BDFLAP =	.000
ELV-L =	.000	ELV-R =	.000
PHI-N =	66.000	THETAN =	108.000
PHI-ML =	88.000	THETML =	98.000
PHI-MR =	32.200	THETMR =	5.000

BETA (1) = -5.030 ALPHA (1) = .000 Q(PSF) = 42.830 PO = 2113.1 RUN NO = 90.000

SECTION (1)MAIN LND GR STRT DEPENDENT VARIABLE CP

DUMMY 1.0000

TAP	
201.000	.6671
202.000	-.1684
203.000	.8381
204.000	-.1725
205.000	.9881
206.000	-.1905
211.000	.9801
212.000	-.7490
213.000	-.6094
214.000	-.1664
215.000	-.1514
216.000	-.7570
221.000	-.1745
222.000	-.1102
223.000	-.7490
224.000	-.7339
225.000	-.7158
226.000	-.7199

BETA (1) = -5.030 ALPHA (2) = 2.050 Q(PSF) = 42.830 PO = 2113.1 RUN NO = 90.000

SECTION (1)MAIN LND GR STRT DEPENDENT VARIABLE CP

DUMMY 1.0000

TAP	
201.000	.8704
202.000	-.0985
203.000	.8613
204.000	-.0834
205.000	.9889
206.000	-.1388
211.000	.9798
212.000	-.6964
213.000	-.5633
214.000	-.0935
215.000	-.0935

OA163B MAIN GEAR STRUT (RFPW11)

BETA (1) = -5.030 ALPHA (2) = 2.050

SECTION (1)MAIN LND GR STRT DEPENDENT VARIABLE CP

DUMMY 1.0000

TAP	
216.000	-.7065
221.000	-.1005
222.000	-.0572
223.000	-.7216
224.000	-.6984
225.000	-.6712
226.000	-.6722

BETA (1) = -5.030 ALPHA (3) = 4.130 Q(PSF) = 42.830 PO = 2113.1 RUN NO = 90.000

SECTION (1)MAIN LND GR STRT DEPENDENT VARIABLE CP

DUMMY 1.0000

TAP	
201.000	.9620
202.000	-.0411
203.000	.8775
204.000	.0204
205.000	.9861
206.000	-.0643
211.000	.9791
212.000	-.6407
213.000	-.5095
214.000	-.0068
215.000	-.0391
216.000	-.6569
221.000	-.0481
222.000	-.0057
223.000	-.6751
224.000	-.6519
225.000	-.6236
226.000	-.6317

0A163B MAIN GEAR STRUT (RFPW11)

BETA (1) = -5.030 ALPHA (4) = 6.190 Q(PSF) = 42.830 PO = 2113.1 RUN NO = 90.000

SECTION (1)MAIN LND GR STRT DEPENDENT VARIABLE CP

DUMMY 1.0000

TAP	
201.000	.9642
202.000	.0234
203.000	.8908
204.000	.1001
205.000	.9892
206.000	.0042
211.000	.9842
212.000	-.5998
213.000	-.4626
214.000	.0527
215.000	.0254
216.000	-.6119
221.000	.0093
222.000	.0637
223.000	-.6341
224.000	-.6058
225.000	-.5776
226.000	-.5847

BETA (2) = -2.010 ALPHA (1) = .000 Q(PSF) = 42.847 PO = 2113.0 RUN NO = 91.000

SECTION (1)MAIN LND GR STRT DEPENDENT VARIABLE CP

DUMMY 1.0000

TAP	
201.000	.9399
202.000	-.1222
203.000	.8259
204.000	-.0630
205.000	.9859
206.000	-.1654
211.000	.9839
212.000	-.7408
213.000	-.5851
214.000	-.0830
215.000	-.1272
216.000	-.7508
221.000	-.1353
222.000	-.0931
223.000	-.7418
224.000	-.7217
225.000	-.7036
226.000	-.6896

OA163B MAIN GEAR STRUT (RFPW11)

BETA (2) = -2.010 ALPHA (2) = 2.060 Q(PSF) = 42.847 PO = 2113.0 RUN NO = 91.000

SECTION (1)MAIN LND GR STRT DEPENDENT VARIABLE CP

DUMMY 1.0000

TAP	
201.000	.9768
202.000	-.0613
203.000	.8452
204.000	.0093
205.000	.9869
206.000	-.0855
211.000	.9849
212.000	-.6961
213.000	-.5498
214.000	-.0239
215.000	-.0602
216.000	-.7112
221.000	-.0713
222.000	-.0269
223.000	-.6961
224.000	-.6799
225.000	-.6658
226.000	-.6527

BETA (2) = -2.010 ALPHA (3) = 4.100 Q(PSF) = 42.847 PO = 2113.0 RUN NO = 91.000

SECTION (1)MAIN LND GR STRT DEPENDENT VARIABLE CP

DUMMY 1.0000

TAP	
201.000	.9864
202.000	-.0017
203.000	.8600
204.000	.0899
205.000	.9844
206.000	-.0269
211.000	.9844
212.000	-.6568
213.000	-.5046
214.000	.0335
215.000	-.0007
216.000	-.6608
221.000	-.0148
222.000	.0395
223.000	-.6628
224.000	-.6407
225.000	-.6286
226.000	-.6104

OA163B MAIN GEAR STRUT (RFPW11)

BETA (2) = -2.000 ALPHA (4) = 6.170 Q(PSF) = 12.847 PO = 2113.0 RUN NO = 91.000

SECTION (1)MAIN LND GR STRT DEPENDENT VARIABLE CP

DUMMY 1.0000

TAP	
201.000	.9903
202.000	.0667
203.000	.8790
204.000	.1625
205.000	.9853
206.000	-.0591
211.000	.9883
212.000	-.6245
213.000	-.4753
214.000	.0959
215.000	.0637
216.000	-.6245
221.000	.0587
222.000	.0788
223.000	-.6305
224.000	-.6204
225.000	-.6043
226.000	-.5963

BETA (3) = -1.000 ALPHA (1) = -.020 Q(PSF) = 12.940 PO = 2113.0 RUN NO = 92.000

SECTION (1)MAIN LND GR STRT DEPENDENT VARIABLE CP

DUMMY 1.0000

TAP	
201.000	.9527
202.000	-.1074
203.000	.8136
204.000	-.0426
205.000	.9805
206.000	-.1404
211.000	.9775
212.000	-.7330
213.000	-.5944
214.000	-.0655
215.000	-.1114
216.000	-.7470
221.000	-.1174
222.000	-.0725
223.000	-.7220
224.000	-.7111
225.000	-.6881
226.000	-.6781

OA163B MAIN GEAR STRUT (RFPH11)

BETA (3) = -1.010 ALPHA (2) = 2.030 Q(PSF) = 42.940 PO = 2113.0 RUN NO = 92.000

SECTION (1)MAIN LND GR STRT DEPENDENT VARIABLE CP

DUMMY 1.0000

TAP	
201.000	.9809
202.000	-.0490
203.000	.8384
204.000	.0365
205.000	.9869
206.000	-.0752
211.000	.9849
212.000	-.6987
213.000	-.5517
214.000	-.0118
215.000	-.0480
216.000	-.7068
221.000	-.0611
222.000	-.0077
223.000	-.6927
224.000	-.6866
225.000	-.6725
226.000	-.6534

BETA (3) = -1.010 ALPHA (3) = 4.110 Q(PSF) = 42.940 PO = 2113.0 RUN NO = 92.000

SECTION (1)MAIN LND GR STRT DEPENDENT VARIABLE CP

DUMMY 1.0000

TAP	
201.000	.9888
202.000	.0183
203.000	.8585
204.000	.1029
205.000	.9858
206.000	-.0229
211.000	.9848
212.000	-.6655
213.000	-.5144
214.000	.0506
215.000	.0163
216.000	-.6644
221.000	.0093
222.000	.0435
223.000	-.6695
224.000	-.6584
225.000	-.6544
226.000	-.6302

0A163B MAIN GEAR STRUT (RFPWI1)

BETA (3) = -1.010 ALPHA (4) = 6.170 Q(PSF) = 42.940 PO = 2113.0 RUN NO = 92.000

SECTION (1)MAIN LND GR STRT DEPENDENT VARIABLE CP

DUMMY 1.0000

TAP	
201.000	.9929
202.000	.0799
203.000	.8785
204.000	.1837
205.000	.9829
206.000	-.0723
211.000	.9879
212.000	-.6248
213.000	-.4847
214.000	.0960
215.000	.0748
216.000	-.6248
221.000	.0768
222.000	.0940
223.000	-.6339
224.000	-.6218
225.000	-.6178
226.000	-.5946

BETA (4) = .010 ALPHA (1) = -.030 Q(PSF) = 42.855 PO = 2113.0 RUN NO = 93.000

SECTION (1)MAIN LND GR STRT DEPENDENT VARIABLE CP

DUMMY 1.0000

TAP	
201.000	.9721
202.000	-.0902
203.000	.8169
204.000	-.0228
205.000	.9861
206.000	-.1384
211.000	.9841
212.000	-.7427
213.000	-.5889
214.000	-.0530
215.000	-.0932
216.000	-.7477
221.000	-.1022
222.000	-.0590
223.000	-.7226
224.000	-.7186
225.000	-.7115
226.000	-.6884

OA163B MAIN GEAR STRUT (RFPW11)

BETA (4) = .010 ALPHA (2) = 2.030 Q(PSF) = 42.855 PO = 2113.0 RUN NO = 93.000

SECTION (1)MAIN LND GR STRT DEPENDENT VARIABLE CP

DUMMY 1.0000

TAP	
201.000	.9830
202.000	-.0309
203.000	.8386
204.000	.0526
205.000	.9850
206.000	-.0914
211.000	.9830
212.000	-.7018
213.000	-.5507
214.000	.0032
215.000	-.0319
216.000	-.7069
221.000	-.0450
222.000	.0042
223.000	-.7049
224.000	-.6998
225.000	-.6948
226.000	-.6716

BETA (4) = .010 ALPHA (3) = 4.100 Q(PSF) = 42.855 PO = 2113.0 RUN NO = 93.000

SECTION (1)MAIN LND GR STRT DEPENDENT VARIABLE CP

DUMMY 1.0000

TAP	
201.000	.9925
202.000	.0344
203.000	.8551
204.000	.1200
205.000	.9835
206.000	-.1386
211.000	.9865
212.000	-.6763
213.000	-.5233
214.000	.0626
215.000	.0304
216.000	-.6682
221.000	.0254
222.000	.0465
223.000	-.6813
224.000	-.6682
225.000	-.6612
226.000	-.6390

OA163B MAIN GEAR STRUT (RFPWII)

BETA (4) = .010 ALPHA (4) = 6.170 Q(PSF) = 42.855 PO = 2113.0 RUN NO = 93.000

SECTION (1)MAIN LND GR STRT DEPENDENT VARIABLE CP

DUMMY 1.0000

TAP	
201.000	.9923
202.000	.0809
203.000	.8768
204.000	.2129
205.000	.9832
206.000	-.1227
211.000	.9893
212.000	-.6301
213.000	-.4879
214.000	.1051
215.000	.0759
216.000	-.6261
221.000	.0728
222.000	.0910
223.000	-.6281
224.000	-.6190
225.000	-.6150
226.000	-.5898

BETA (5) = 1.010 ALPHA (1) = -.030 Q(PSF) = 42.927 PO = 2113.1 RUN NO = 94.000

SECTION (1)MAIN LND GR STRT DEPENDENT VARIABLE CP

DUMMY 1.0000

TAP	
201.000	.9745
202.000	-.0788
203.000	.8159
204.000	-.0007
205.000	.9835
206.000	-.1930
211.000	.9825
212.000	-.7420
213.000	-.5877
214.000	-.0408
215.000	-.0798
216.000	-.7400
221.000	-.0909
222.000	-.0358
223.000	-.7260
224.000	-.7280
225.000	-.7219
226.000	-.6948

OA163B MAIN GEAR STRUT (RFPW11)

BETA (5) = 1.010 ALPHA (2) = 2.060 Q(PSF) = 42.927 PO = 2113.1 RUN NO = 94.000

SECTION (1)MAIN LND GR STRT DEPENDENT VARIABLE CP

DUMMY 1.0000

TAP	
201.000	.9875
202.000	-.0128
203.000	.8382
204.000	.0626
205.000	.9865
206.000	-.1787
211.000	.9875
212.000	-.7068
213.000	-.5589
214.000	.0223
215.000	-.0138
216.000	-.6997
221.000	-.0218
222.000	.0143
223.000	-.7028
224.000	-.6997
225.000	-.6927
226.000	-.6665

BETA (5) = 1.010 ALPHA (3) = 4.100 Q(PSF) = 42.927 PO = 2113.1 RUN NO = 94.000

SECTION (1)MAIN LND GR STRT DEPENDENT VARIABLE CP

DUMMY 1.0000

TAP	
201.000	.9884
202.000	.0455
203.000	.8562
204.000	.1440
205.000	.9794
206.000	-.1606
211.000	.9844
212.000	-.6716
213.000	-.5287
214.000	.0646
215.000	.0414
216.000	-.6726
221.000	.0404
222.000	.0585
223.000	-.6675
224.000	-.6665
225.000	-.6615
226.000	-.6313

OA163B MAIN GEAR STRUT (RFPW11)

BETA (5) = 1.010 ALPHA (4) = 6.190 Q(PSF) = 42.927 PO = 2113.1 RUN NO = 94.000

SECTION (1)MAIN LND GR STRT DEPENDENT VARIABLE CP

DUMMY 1.0000

TAP	
201.000	.9937
202.000	.0940
203.000	.8732
204.000	.2198
205.000	.9766
206.000	-.1398
211.000	.9837
212.000	-.6146
213.000	-.4876
214.000	.1141
215.000	.0819
216.000	-.6237
221.000	.0798
222.000	.1000
223.000	-.6116
224.000	-.6146
225.000	-.6086
226.000	-.5813

BETA (6) = 1.990 ALPHA (1) = .000 Q(PSF) = 42.897 PO = 2113.0 RUN NO = 95.000

SECTION (1)MAIN LND GR STRT DEPENDENT VARIABLE CP

DUMMY 1.0000

TAP	
201.000	.9867
202.000	-.0627
203.000	.8214
204.000	.0172
205.000	.9867
206.000	-.2787
211.000	.9867
212.000	-.7466
213.000	-.5906
214.000	-.0247
215.000	-.0637
216.000	-.7466
221.000	-.0737
222.000	-.0247
223.000	-.7346
224.000	-.7266
225.000	-.7216
226.000	-.6886

OA163B MAIN GEAR STRUT (RFPW11)

BETA (6) = 1.990 ALPHA (2) = 2.030 Q(PSF) = 42.897 PO = 2113.0 RUN NO = 95.000

SECTION (1)MAIN LND GR STRT DEPENDENT VARIABLE CP

DUMMY 1.0000

TAP	
201.000	.9880
202.000	.0022
203.000	.8335
204.000	.0848
205.000	.9820
206.000	-.2143
211.000	.9870
212.000	-.7099
213.000	-.5648
214.000	.0324
215.000	.0092
216.000	-.7119
221.000	-.0047
222.000	.0153
223.000	-.7028
224.000	-.7018
225.000	-.6968
226.000	-.6666

BETA (6) = 2.000 ALPHA (3) = 4.110 Q(PSF) = 42.897 PO = 2113.0 RUN NO = 95.000

SECTION (1)MAIN LND GR STRT DEPENDENT VARIABLE CP

DUMMY 1.0000

TAP	
201.000	.9893
202.000	.0597
203.000	.8517
204.000	.1656
205.000	.9753
206.000	-.1742
211.000	.9863
212.000	-.8654
213.000	-.5333
214.000	.0698
215.000	.0486
216.000	-.6755
221.000	.0577
222.000	.0638
223.000	-.6664
224.000	-.6634
225.000	-.6564
226.000	-.6291

OA163B MAIN GEAR STRUT (RFPW11)

BETA (6) = 2.000 ALPHA (4) = 6.180 Q(PSF) = 42.897 PO = 2113.0 RUN NO = 95.000

SECTION (1)MAIN LND GR STRT DEPENDENT VARIABLE CP

DUMMY 1.0000

TAP	
201.000	.9919
202.000	.1141
203.000	.8755
204.000	.2449
205.000	.9437
206.000	-.1459
211.000	.9859
212.000	-.6107
213.000	-.4877
214.000	.1192
215.000	.0789
216.000	-.6259
221.000	.0970
222.000	.0930
223.000	-.5976
224.000	-.5946
225.000	-.5896
226.000	-.5694

BETA (7) = 5.040 ALPHA (1) = -.020 Q(PSF) = 42.875 PO = 2113.1 RUN NO = 96.000

SECTION (1)MAIN LND GR STRT DEPENDENT VARIABLE CP

DUMMY 1.0000

TAP	
201.000	.9806
202.000	-.0217
203.000	.8381
204.000	.0663
205.000	.9298
206.000	-.2509
211.000	.9298
212.000	-.7533
213.000	-.6252
214.000	.0092
215.000	-.0227
216.000	-.7683
221.000	-.0307
222.000	-.0077
223.000	-.7203
224.000	-.7173
225.000	-.7103
226.000	-.6782

OA1638 MAIN GEAR STRUT (RFPW11)

BETA (7) = 5.030 ALPHA (2) = 2.050 Q(PSF) = 42.875 PO = 2113.1 RUN NO = 96.000

SECTION (1)MAIN LND GR STRT DEPENDENT VARIABLE CP

DUMMY 1.0000

TAP	
201.000	.9330
202.000	.0173
203.000	.8578
204.000	.1351
205.000	.7716
206.000	-.2272
211.000	.9260
212.000	-.6811
213.000	-.5724
214.000	.0445
215.000	.0133
216.000	-.7133
221.000	.0062
222.000	.0284
223.000	-.6569
224.000	-.6579
225.000	-.6408
226.000	-.6177

BETA (7) = 5.030 ALPHA (3) = 4.100 Q(PSF) = 42.875 PO = 2113.1 RUN NO = 96.000

SECTION (1)MAIN LND GR STRT DEPENDENT VARIABLE CP

DUMMY 1.0000

TAP	
201.000	.7755
202.000	.0679
203.000	.8731
204.000	.1890
205.000	.7222
206.000	-.1775
211.000	.9395
212.000	-.6018
213.000	-.5099
214.000	.0841
215.000	.0457
216.000	-.6553
221.000	.0608
222.000	.0618
223.000	-.5927
224.000	-.5816
225.000	-.5674
226.000	-.5553

OA163B MAIN GEAR STRUT (RFPW11)

BETA (7) = 5.030 ALPHA (4) = 6.190 Q(PSF) = 42.875 PO = 2113.1 RUN NO = 96.000

SECTION (1)MAIN LND GR STRT DEPENDENT VARIABLE CP

DUMMY 1.0000

TAP	
201.000	.7755
202.000	.1445
203.000	.8840
204.000	.3727
205.000	.6439
206.000	-.1218
211.000	.9332
212.000	-.5334
213.000	-.4658
214.000	.1172
215.000	.0900
216.000	-.6081
221.000	.1122
222.000	.0900
223.000	-.5465
224.000	-.5374
225.000	-.5223
226.000	-.5163

OA163B MAIN GEAR STRUT (RFPW12) (27 APR 77)

REFERENCE DATA

SREF =	2690.0000 SQ.FT.	XMRP =	1076.7000	N. XO
LREF =	474.8100 INCHES	YMRP =	.0000	IN. YO
BREF =	936.6800 INCHES	ZMRP =	375.0000	IN. ZO
SCALE =	.0405			

PARAMETRIC DATA

SPDBRK =	25.000	BDFLAP =	.000
ELV-L =	5.000	ELV-R =	5.000
PHI-N =	30.800	THETAN =	5.000
PHI-ML =	32.200	THETML =	5.000
PHI-MR =	32.200	THETMR =	5.000

ALPHA (1) = 4.180 BETA (1) = -5.050 Q(PSF) = 42.851 PO = 2115.1 RUN NO = 50.000

SECTION (1)MAIN LND GR STRT DEPENDENT VARIABLE CP

DUMMY 1.0000

TAP	
201.000	-.1527
202.000	-.1245
203.000	-.1144
204.000	-.1486
205.000	-.1315
206.000	-.1617
211.000	-.1265
212.000	-.0087
213.000	-.1295
214.000	-.1215
215.000	-.1265
216.000	-.0571
221.000	-.1346
222.000	-.1154
223.000	-.1275
224.000	-.1265
225.000	-.1265
226.000	-.1276

ALPHA (1) = 4.170 BETA (2) = -4.020 Q(PSF) = 42.851 PO = 2115.1 RUN NO = 50.000

SECTION (1)MAIN LND GR STRT DEPENDENT VARIABLE CP

DUMMY 1.0000

TAP	
201.000	-.1451
202.000	-.1138
203.000	-.1007
204.000	-.1270
205.000	-.1229
206.000	-.1482
211.000	-.1138
212.000	-.0138
213.000	-.1209
214.000	-.1088
215.000	-.1219

OA163B MAIN GEAR STRUT (RFPW12)

ALPHA (1) = 4.170 BETA (2) = -4.020

SECTION (1)MAIN LND GR STRT DEPENDENT VARIABLE CP

DUMMY 1.0000

TAP	
216.000	-.0613
221.000	-.1229
222.000	-.1037
223.000	-.1179
224.000	-.1159
225.000	-.1169
226.000	-.1128

ALPHA (1) = 4.180 BETA (3) = -2.970 Q(PSF) = 42.851 PO = 2115.1 RUN NO = 50.000

SECTION (1)MAIN LND GR STRT DEPENDENT VARIABLE CP

DUMMY 1.0000

TAP	
201.000	-.1332
202.000	-.1021
203.000	-.0870
204.000	-.1041
205.000	-.1121
206.000	-.1352
211.000	-.1031
212.000	-.0189
213.000	-.1091
214.000	-.0961
215.000	-.1091
216.000	-.0659
221.000	-.1101
222.000	-.0870
223.000	-.1031
224.000	-.1041
225.000	-.1061
226.000	-.1031

OA163B MAIN GEAR STRUT (RFPW.2)

ALPHA (1) = 4.170 BETA (4) = -2.040 Q(PSF) = 42.851 PO = 2115.1 RUN NO = 50.000

SECTION (1)MAIN LND GR STRT DEPENDENT VARIABLE CP

DUMMY 1.0000

TAP	
201.000	-.1166
202.000	-.0955
203.000	-.0763
204.000	-.0914
205.000	-.1025
206.000	-.1257
211.000	-.0995
212.000	-.0239
213.000	-.0995
214.000	-.0793
215.000	-.1035
216.000	-.0713
221.000	-.1025
222.000	-.0773
223.000	-.0995
224.000	-.0955
225.000	-.0985
226.000	-.0945

ALPHA (1) = 4.180 BETA (5) = -1.040 Q(PSF) = 42.851 PO = 2115.1 RUN NO = 50.000

SECTION (1)MAIN LND GR STRT DEPENDENT VARIABLE CP

DUMMY 1.0000

TAP	
201.000	-.0984
202.000	-.0853
203.000	-.0611
204.000	-.0762
205.000	-.0913
206.000	-.1135
211.000	-.0913
212.000	-.0259
213.000	-.0903
214.000	-.0601
215.000	-.0893
216.000	-.0712
221.000	-.0843
222.000	-.0601
223.000	-.0903
224.000	-.0883
225.000	-.0893
226.000	-.0873

OA163B MAIN GEAR STRUT (RFPW12)

ALPHA (1) = 4.170 BETA (6) = -.020 Q(PSF) = 42.851 PO = 2115.1 RUN NO = 50.000

SECTION (1)MAIN LND GR STRT DEPENDENT VARIABLE CP

DUMMY 1.0000

TAP	
201.000	-.0894
202.000	-.0783
203.000	-.0561
204.000	-.0662
205.000	-.0833
206.000	-.1015
211.000	-.0813
212.000	-.0309
213.000	-.0783
214.000	-.0511
215.000	-.0753
216.000	-.0743
221.000	-.0743
222.000	-.0551
223.000	-.0813
224.000	-.0793
225.000	-.0803
226.000	-.0763

ALPHA (1) = 4.170 BETA (7) = .970 Q(PSF) = 42.851 PO = 2115.1 RUN NO = 50.000

SECTION (1)MAIN LND GR STRT DEPENDENT VARIABLE CP

DUMMY 1.0000

TAP	
201.000	-.0783
202.000	-.0662
203.000	-.0481
204.000	-.0501
205.000	-.0723
206.000	-.0864
211.000	-.0702
212.000	-.0340
213.000	-.0662
214.000	-.0420
215.000	-.0652
216.000	-.0713
221.000	-.0612
222.000	-.0450
223.000	-.0692
224.000	-.0652
225.000	-.0702
226.000	-.0642

OA163B MAIN GEAR STRUT (RFPW12)

ALPHA (1) = 4.170 BETA (8) = 1.970 Q(PSF) = 42.851 PO = 2115.1 RUN NO = 50.000

SECTION (1)MAIN LND GR STRT DEPENDENT VARIABLE CP

DUMMY 1.0000

TAP	
201.000	-.0641
202.000	-.0530
203.000	-.0299
204.000	-.0339
205.000	-.0591
206.000	-.0701
211.000	-.0581
212.000	-.0319
213.000	-.0510
214.000	-.0289
215.000	-.0520
216.000	-.0661
221.000	-.0460
222.000	-.0329
223.000	-.0540
224.000	-.0540
225.000	-.0560
226.000	-.0510

ALPHA (1) = 4.170 BETA (9) = 2.990 Q(PSF) = 42.851 PO = 2115.1 RUN NO = 50.000

SECTION (1)MAIN LND GR STRT DEPENDENT VARIABLE CP

DUMMY 1.0000

TAP	
201.000	-.0518
202.000	-.0448
203.000	-.0199
204.000	-.0137
205.000	-.0488
206.000	-.0518
211.000	-.0468
212.000	-.0318
213.000	-.0358
214.000	-.0157
215.000	-.0388
216.000	-.0639
221.000	-.0328
222.000	-.0268
223.000	-.0368
224.000	-.0328
225.000	-.0348
226.000	-.0378

OA163B MAIN GEAR STRUT (RFPW12)

ALPHA (1) = 4.170 BETA (10) = 4.050 Q(PSF) = 42.851 PO = 2115.1 RUN NO = 50.000

SECTION (1)MAIN LND GR STRT DEPENDENT VARIABLE CP

DUMMY 1.0000

TAP	
201.000	-.0431
202.000	-.0269
203.000	-.0068
204.000	.0174
205.000	-.0360
206.000	-.0249
211.000	-.0300
212.000	-.0259
213.000	-.0209
214.000	-.0078
215.000	-.0290
216.000	-.0562
221.000	-.0199
222.000	-.0229
223.000	-.0189
224.000	-.0179
225.000	-.0179
226.000	-.0219

ALPHA (1) = 4.170 BETA (11) = 5.000 Q(PSF) = 42.851 PO = 2115.1 RUN NO = 50.000

SECTION (1)MAIN LND GR STRT DEPENDENT VARIABLE CP

DUMMY 1.0000

TAP	
201.000	-.0330
202.000	-.0118
203.000	.0022
204.000	.0426
205.000	-.0249
206.000	-.0080
211.000	-.0159
212.000	-.0209
213.000	-.0108
214.000	.0053
215.000	-.0239
216.000	-.0492
221.000	-.0108
222.000	-.0148
223.000	-.0037
224.000	-.0047
225.000	-.0088
226.000	-.0098

OA163B MAIN GEAR STRUT (RFPW13) (27 APR 77)

REFERENCE DATA

SREF =	2690.0000 SQ.FT.	XMRP =	1076.7000 IN. XO		
LREF =	474.8100 INCHES	YMRP =	.0000 IN. YO		
BREF =	936.6800 INCHES	ZMRP =	375.0000 IN. ZO		
SCALE =	.0405				

PARAMETRIC DATA

SPDBRK =	25.000	BDFLAP =	.000
ELV-L =	.000	ELV-R =	.000
PHI-N =	66.000	THETAN =	108.000
PHI-ML =	32.200	THETML =	5.000
PHI-MR =	36.000	THETMR =	5.600

ALPHA (1) = 4.120 BETA (1) = -5.030 Q(PSF) = 42.904 PO = 2112.9 RUN NO = 82.000

SECTION (1)MAIN LND GR STRT DEPENDENT VARIABLE CP

DUMMY 1.0000

TAP	
201.000	-.1568
202.000	-.1447
203.000	-.1326
204.000	-.1698
205.000	-.1527
206.000	-.1839
211.000	-.1467
212.000	.0163
213.000	-.1477
214.000	-.1447
215.000	-.1457
216.000	-.0289
221.000	-.1527
222.000	-.1396
223.000	-.1447
224.000	-.1447
225.000	-.1477
226.000	-.1467

ALPHA (1) = 4.120 BETA (2) = -4.040 Q(PSF) = 42.904 PO = 2112.9 RUN NO = 82.000

SECTION (1)MAIN LND GR STRT DEPENDENT VARIABLE CP

DUMMY 1.0000

TAP	
201.000	-.1525
202.000	-.1334
203.000	-.1193
204.000	-.1575
205.000	-.1435
206.000	-.1716
211.000	-.1344
212.000	.0093
213.000	-.1354
214.000	-.1284
215.000	-.1344

OA163B MAIN GEAR STRUT (RFPW13)

ALPHA (1) = 4.120 BETA (2) = -4.040

SECTION (1)MAIN LND GR STRT DEPENDENT VARIABLE CP

DUMMY 1.0000

TAP	
216.000	-.0459
221.000	-.1384
222.000	-.1223
223.000	-.1314
224.000	-.1334
225.000	-.1334
226.000	-.1324

ALPHA (1) = 4.120 BETA (3) = -2.950 Q(PSF) = 42.904 PO = 2112.9 RUN NO = 82.000

SECTION (1)MAIN LND GR STRT DEPENDENT VARIABLE CP

DUMMY 1.0000

TAP	
201.000	-.1516
202.000	-.1214
203.000	-.1063
204.000	-.1355
205.000	-.1345
206.000	-.1546
211.000	-.1204
212.000	.0022
213.000	-.1274
214.000	-.1174
215.000	-.1274
216.000	-.0530
221.000	-.1285
222.000	-.1083
223.000	-.1204
224.000	-.1224
225.000	-.1234
226.000	-.1214

OA163B MAIN GEAR STRUT (RFPW13)

ALPHA (1) = 4.120 BETA (4) = -2.010 Q(PSF) = 42.904 PO = 2112.9 RUN NO = 82.000

SECTION (1)MAIN LND GR STRT DEPENDENT VARIABLE CP

DUMMY 1.0000

TAP	
201.000	-.1384
202.000	-.1102
203.000	-.0952
204.000	-.1153
205.000	-.1223
206.000	-.1454
211.000	-.1133
212.000	-.0047
213.000	-.1183
214.000	-.1022
215.000	-.1173
216.000	-.0590
221.000	-.1213
222.000	-.0962
223.000	-.1123
224.000	-.1113
225.000	-.1143
226.000	-.1133

ALPHA (1) = 4.120 BETA (5) = -1.020 Q(PSF) = 42.904 PO = 2112.9 RUN NO = 82.000

SECTION (1)MAIN LND GR STRT DEPENDENT VARIABLE CP

DUMMY 1.0000

TAP	
201.000	-.1216
202.000	-.1065
203.000	-.0803
204.000	-.0954
205.000	-.1126
206.000	-.1327
211.000	-.1075
212.000	-.0078
213.000	-.1075
214.000	-.0813
215.000	-.1105
216.000	-.0612
221.000	-.1095
222.000	-.0823
223.000	-.1055
224.000	-.1035
225.000	-.1055
226.000	-.1055

OA163B MAIN GEAR STRUT (RFPW13)

ALPHA (1) = 4.120 BETA (6) = .000 Q(PSF) = 42.904 PO = 2112.9 RUN NO = 82.000

SECTION (1)MAIN LND GR STRT DEPENDENT VARIABLE CP

DUMMY 1.0000

TAP	
201.000	-.1049
202.000	-.0959
203.000	-.0658
204.000	-.0828
205.000	-.1019
206.000	-.1169
211.000	-.0979
212.000	-.0087
213.000	-.0969
214.000	-.0658
215.000	-.0969
216.000	-.0608
221.000	-.0929
222.000	-.0688
223.000	-.0969
224.000	-.0969
225.000	-.0959
226.000	-.0939

ALPHA (1) = 4.120 BETA (7) = 1.020 Q(PSF) = 42.904 PO = 2112.9 RUN NO = 82.000

SECTION (1)MAIN LND GR STRT DEPENDENT VARIABLE CP

DUMMY 1.0000

TAP	
201.000	-.0975
202.000	-.0874
203.000	-.0632
204.000	-.0753
205.000	-.0914
206.000	-.1086
211.000	-.0884
212.000	-.0128
213.000	-.0874
214.000	-.0571
215.000	-.0844
216.000	-.0622
221.000	-.0783
222.000	-.0612
223.000	-.0894
224.000	-.0864
225.000	-.0914
226.000	-.0854

DATE 27 APR 77 OA163B PRESSURE DATA LISTING

OA163B MAIN GEAR STRUT (RFPW13)

ALPHA (1) = 4.120 BETA (8) = 2.000 Q(PSF) = 42.904 PO = 2112.9 RUN NO = 82.000

SECTION (1)MAIN LND GR STRT DEPENDENT VARIABLE CP

DUMMY 1.0000

TAP	
201.000	-.0854
202.000	-.0743
203.000	-.0501
204.000	-.0562
205.000	-.0804
206.000	-.0955
211.000	-.0783
212.000	-.0128
213.000	-.0733
214.000	-.0481
215.000	-.0713
216.000	-.0592
221.000	-.0672
222.000	-.0501
223.000	-.0743
224.000	-.0743
225.000	-.0804
226.000	-.0743

ALPHA (1) = 4.120 BETA (9) = 2.990 Q(PSF) = 42.904 PO = 2112.9 RUN NO = 82.000

SECTION (1)MAIN LND GR STRT DEPENDENT VARIABLE CP

DUMMY 1.0000

TAP	
201.000	-.0821
202.000	-.0700
203.000	-.0409
204.000	-.0479
205.000	-.0771
206.000	-.0861
211.000	-.0750
212.000	-.0148
213.000	-.0640
214.000	-.0409
215.000	-.0640
216.000	-.0580
221.000	-.0590
222.000	-.0419
223.000	-.0670
224.000	-.0670
225.000	-.0720
226.000	-.0650

OA163B MAIN GEAR STRUT (RFPW13)

ALPHA (1) = 4.120 BETA (10) = 4.070 Q(PSF) = 42.904 PO = 2112.9 RUN NO = 82.000

SECTION (1)MAIN LND GR STRT DEPENDENT VARIABLE CP

DUMMY 1.0000

TAP	
201.000	-.0732
202.000	-.0581
203.000	-.0289
204.000	-.0299
205.000	-.0661
206.000	-.0772
211.000	-.0651
212.000	-.0128
213.000	-.0571
214.000	-.0289
215.000	-.0561
216.000	-.0520
221.000	-.0510
222.000	-.0339
223.000	-.0561
224.000	-.0581
225.000	-.0631
226.000	-.0591

ALPHA (1) = 4.120 BETA (11) = 5.030 Q(PSF) = 42.904 PO = 2112.9 RUN NO = 82.000

SECTION (1)MAIN LND GR STRT DEPENDENT VARIABLE CP

DUMMY 1.0000

TAP	
201.000	-.0670
202.000	-.0530
203.000	-.0228
204.000	-.0278
205.000	-.0610
206.000	-.0731
211.000	-.0590
212.000	-.0107
213.000	-.0519
214.000	-.0278
215.000	-.0519
216.000	-.0479
221.000	-.0439
222.000	-.0278
223.000	.0519
224.000	-.0519
225.000	-.0590
226.000	-.0530