SYSTEMS CONTROL, INC. (Vt)
1801 Page Mill Road
Palo Alto, California 94304

Telex: 348433

Telephone:
(415) 494-1165

OCTOBER 1977

CR-152054

IDENTIFICATION OF SPEY ENGINE DYNAMICS IN THE AUGMENTOR WING JET STOL RESEARCH AIRCRAFT FROM FLIGHT DATA

(NASA-CR-152054) IDENTIFICATION OF SPEY ENGINE DYNAMICS IN THE AUGMENTOR WING JET STOL RESEARCH AIRCRAFT FROM FLIGHT DATA (Systems Control, Inc., Palo Alto, Calif.) 155 p HC A08/MF A01 CSCL 21E G3/07

N78-10094

Unclas
52047

Prepared for

NATIONAL AERONAUTICS AND SPACE ADMINISTRATION
Ames Research Center
Moffett Field, California 94035

Prepared by:

Ronald L. De Hoff
W. Brady Reed
Thomas L. Trankle

Approved by:

W. Earl Hall, Jr.

TABLE OF CONTENTS

		Page
I.	INTRODUCTION AND SUMMARY	1
	1.1 INTRODUCTION	1
	1.2 SUMMARY	2
II.	MODELING THE SPEY ENGINE	5
	2.1 INTRODUCTION	5
	2.2 TYPES OF ENGINE MODELS	5
	2.3 CURRENT SPEY ENGINE MODEL IN THE AWJSTOLRA SIMULATION	10
	2.4 DETAILED MODEL OF THE ENGINE	16
	2.5 SIMPLIFIED MODEL	28
	2.6 SENSOR MODELS	30
	2.7 SUMMARY	31
III.	PRELIMINARY PARAMETER ESTIMATES	33
	3.1 SUMMARY OF FLIGHT DATA	33
	3.2 INITIAL PARAMETER ESTIMATES	36
	3.2.1 Steady State Operation	36
	3.2.2 Throttle Hysteresis	43
	3.2.3 Rate Limiting	48
	3.2.4 Fan and Compressor Dynamics	51
	3.2.5 Control Parameters	53
	3.2.6 Summary of Initial Parameter Estimates	54
VI.	PARAMETER IDENTIFICATION PROGRAM	57
	4.1 THEORETICAL BACKGROUND	57
	4.2 STATISTICAL PROPERTIES	60
V.	RESULTS OF PARAMETER IDENTIFICATION	67
	5.1 THROTTLE IDENTIFICATION	67
	5.2 IDENTIFICATION OF PRESSURE DYNAMICS	72
	5.3 IDENTIFICATION OF ENGINE PARAMETERS	75
	5.4 IDENTIFICATION OF CONTROL PARAMETERS	81
	5.5 SUMMARY	85
VI.	SUMMARY AND CONCLUSIONS	89
	6.1 SUMMARY	89
	6.2 CONCLUSIONS	89

PRECEDING PAGE BLANK NOT FILMED

TABLE OF CONTENTS (Continued)

Page

REFERENCES 93

APPENDIX A - LISTING OF SPEY ENGINE SIMULATION AND IDENTIFICATION PROGRAM 95

APPENDIX B - FLIGHT PLAN: S2-E13 127

APPENDIX C - TIME HISTORY MATCHES FOR PARAMETER IDENTIFICATION RUNS 129

CHAPTER I
INTRODUCTION AND SUMMARY

1.1 INTRODUCTION

The Augmentor Wing Jet STOL Research Aircraft (AWJSTOLRA) is an advanced test vehicle for STOL powered-lift flight testing. An initial area of interest is the control of the AWJSTOLRA to closely track an altitude profile during approach and flare maneuvers. For a powered lift vehicle during landing approach, the throttle may be used as the primary control of normal acceleration. The accurate digital simulation of aircraft maneuvers involving throttle changes and the design of autopilot logic using feedback to the throttle require an accurate model of the dynamic response of engine thrust to changes in throttle commands. This model represents a complex interaction of nonlinear static and dynamic behavior in the engine control and aerothermodynamic and mechanical couplings in the engine and duct. It has been the goal of Systems Control, Inc. (Vt) [SCI (Vt)], in close coordination with NASA Ames personnel, to determine experimental mathematical models of the AWJSTORA Spey engine dynamics by the application of system identification techniques to flight test data.

The AWSTOLRA is a modified de Havilland Buffalo C8-A aircraft using two Rolls Royce Spey engines [1]. The program is sponsored jointly by the National Aeronautics and Space Administration and the Department of Industry, Trade and Commerce of Canada.

Modifications to this C8-A were made to improve lift characteristics at low speed for the short landing requirement. A transverse duct is used to channel fan airflow to ejector nozzles on the opposite wing blowing over an augmentor flap. Direct lift is provided by vectoring core stream flow

through an adjustable nozzle. The modifications have a significant effect on the dynamical properties of the propulsion system and lead to the consideration of experimental model development for this aircraft.

The spey engine is a low bypass, twin spool turbofan built by Rolls Royce of Canada. The normal gas path has been significantly modified for AWJSTOLRA operation. The new configuration is shown in Figure 1.1. The engine fuel control is hydromechanical with a mechanical cable linkage used to command throttle lever inputs from the cockpit electromechanical servo.

The linkage/control/engine system is nonlinear in both static and dynamic operation. Simple models previously utilized to describe engine behavior were not sufficient to explain observed response to closed-loop throttle inputs during landing. The SCI (Vt) program was undertaken to utilize system identification software to develop flight verified models of propulsion system dynamics.

1.2 SUMMARY

The report contains six chapters describing the development and validation of the Spey engine model. Chapter II describes the analysis of the dynamical interactions involved in the propulsion unit and the reduction of the model to contain only significant effects. The reduced model was used in conjunction with the flight data to develop initial estimates of parameters in the system using classical approaches. This analysis is presented in Chapter III. Chapter IV describes the theoretical background used in estimating the parameters and the software package developed to accomplish the processing. Flight data was processed to estimate and validate a set of parameters and these results are presented in Chapter V. The work and results are summarized in Chapter VI.

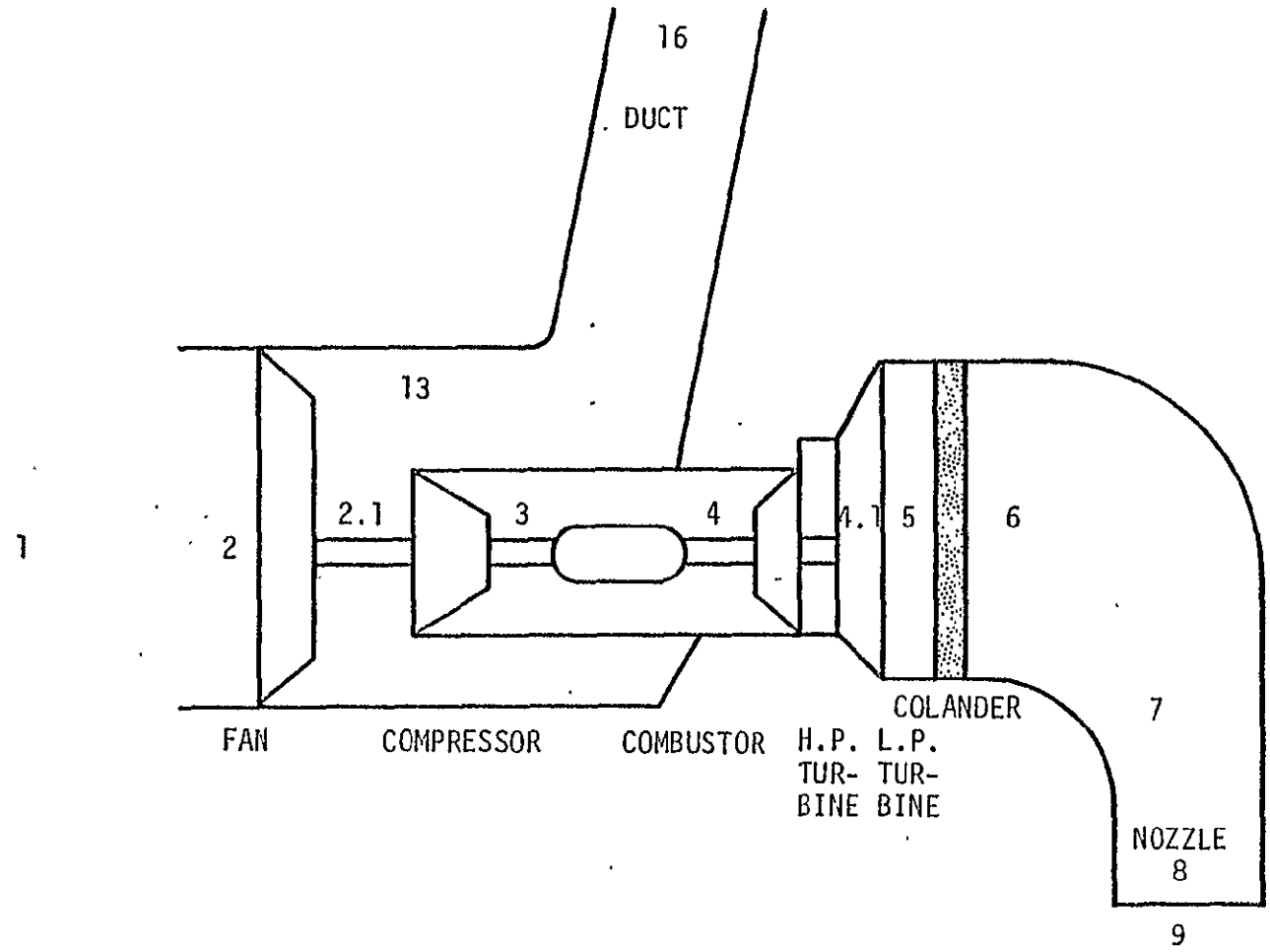

Figure 1.1 Gas Path Configuration of Spey Engines on AWJSTOLRA

CHAPTER II
MODELING THE SPEY ENGINE

2.1 INTRODUCTION

A simulation of the AWJSTOLRA was required to assess its handling and control characteristics prior to flight test [1,2]. In addition, pilots were to receive training in various flight regimes including system failures and abnormal operation. For this reason, a detailed digital simulation of the AWJSTOLRA aerodynamic and kinematics was developed by NASA Ames, including a model of the characteristics of the propulsion system. In this chapter, models for the propulsion system of varying levels of complexity are examined and a model is proposed for system identification.

2.2 TYPES OF ENGINE MODELS

The propulsion system can be described in mathematical terms in several ways. The choice of model form has an important impact on the analysis tools, the type of data taken, and the regimes of application of the expressions. Another consideration in the model is the interface between the engine and the input/output boundaries. Models that describe the throttle linkage and fuel control as well as the engine may be significantly different from "open-loop" models of the engine. Also, the estimation capabilities from experimental data will be directly influenced by the model interface. This partition of the physical system into model and "outside" is determined by the objectives of the descriptions.

In the Spey engine, a model is desired which describes the engine thrust and airflow response to power lever inputs from the cockpit. Dynamics in the engine or control which are not

PRECEDING PAGE BLANK NOT FILMED

excited during this operation are not important to the modeling task. The model will be used to describe large power excursions approximately and model dynamics in the high power region accurately. Altitude/speed regions of validity will be limited to low altitude/low speed and nonstandard temperature conditions.

The value of the model will be in its description of important aspects of performance. Steady-state values of thrust and airflow should match the values measured in static tests corrected to nonstandard conditions. Dynamic response to small perturbations should accurately reflect engine behavior. Match of intermediate variables describing engine operation is not critical.

Models used to describe typical engine behavior vary widely in complexity and accuracy [3]. The simplest description of engine response is to plot corrected engine thrust versus power lever angle. This characteristic is shown in Figure 2.1. The plot can be used as a dynamic model if an appropriate time lag is associated between the actual throttle position and a lagged or virtual position. The engine is observed to accelerate and decelerate at rates dependent on the power level. This effect can be represented in the model as a variable rate limit. The experimental model is shown in Figure 2.2. No attempt is made at a phenomenological explanation of the behavior and parameters are adjusted from observations. Since the model does not reflect the internal derivative agents of the thrust response, the match between the system behavior for various size inputs and for different starting and ending values of thrust will be poor. A more significant drawback of these models is the poor closed-loop description of the behavior. This mismatch is typically manifested by an incorrect prediction of the closed-loop stability of the system. This is due primarily to matching the step response in estimating parameters rather than matching

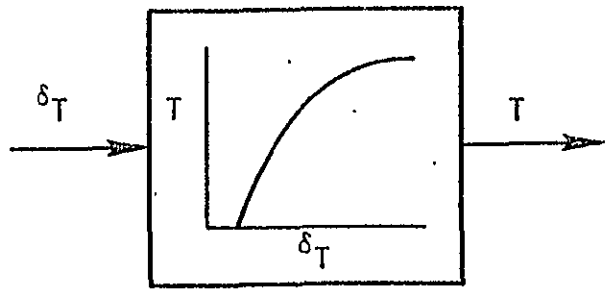

Figure 2.1 Thrust Response to Throttle Input

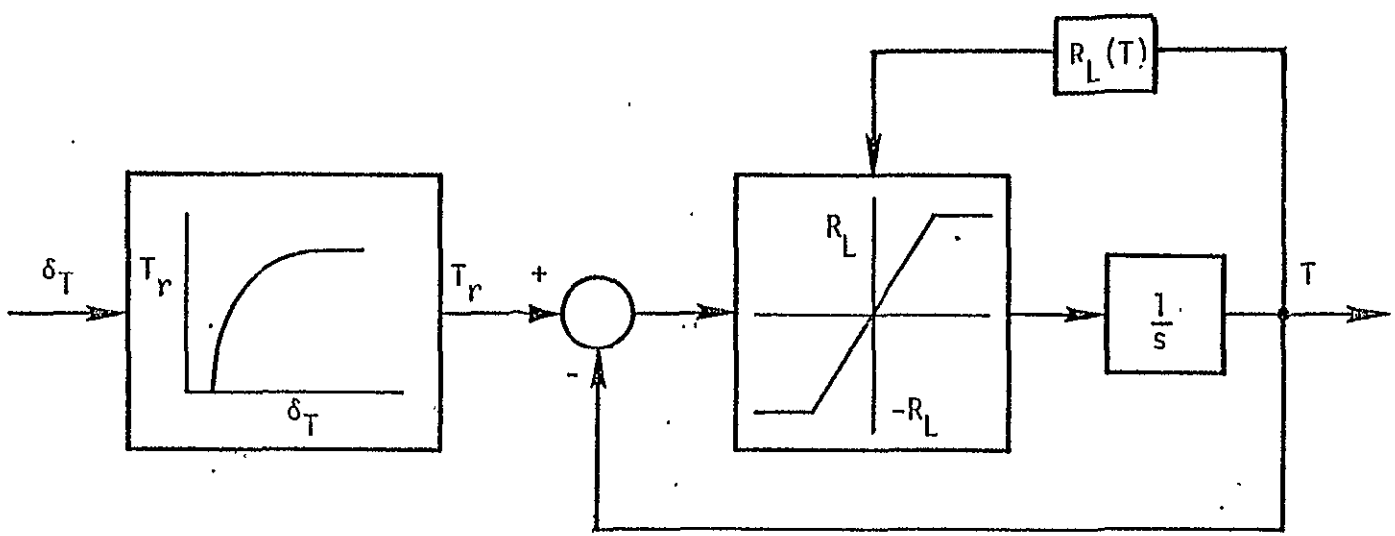

Figure 2.2 Experimental Model of Engine Dynamics

frequency response over a suitable bandwidth. Generally, frequency matching requires more complex model forms. In order to accommodate this lack of precision, simple models tend to be "improved" by ad hoc additions which attempt to correct the fundamental nonphenomenological characteristics of the formulation.

Far more complex digital simulations exist which can model component characteristics measured from rig tests and aerothermodynamic phenomena occurring in the gas path. Such a simulation is shown schematically in Figure 2.3. These simulations include basic physical laws relating energy, work, massflow and acceleration as they dynamically interact in the engine. Various "adjustable" parameters such as lumped isentropic efficiencies and areas are adjusted to match the observed steady-state relationships between input and output variables. A detailed representation of the governor is included and the overall response can be generally tuned to match observed dynamics. While this type of simulation recreates steady-state performance accurately, the match of transient response is poorer due to modeling uncertainties in the complex equations. Predicted stability characteristics in a closed-loop control are quite good. Thus, these programs can be used as a durable test bed for control and autothrottle design and evaluation.

The drawbacks of detailed analytical simulations are that: (a) a large computer capability is necessary to execute them (often slower than real time), (b) detailed internal engine and control information is required which is only available (if at all) to the engine manufacturer, and (c) the added complexity cannot be justified or validated from input/output performance observed in operation. Clearly, a middle ground must exist.

The development of an experimentally validated analytical description of the propulsion system can be accomplished by

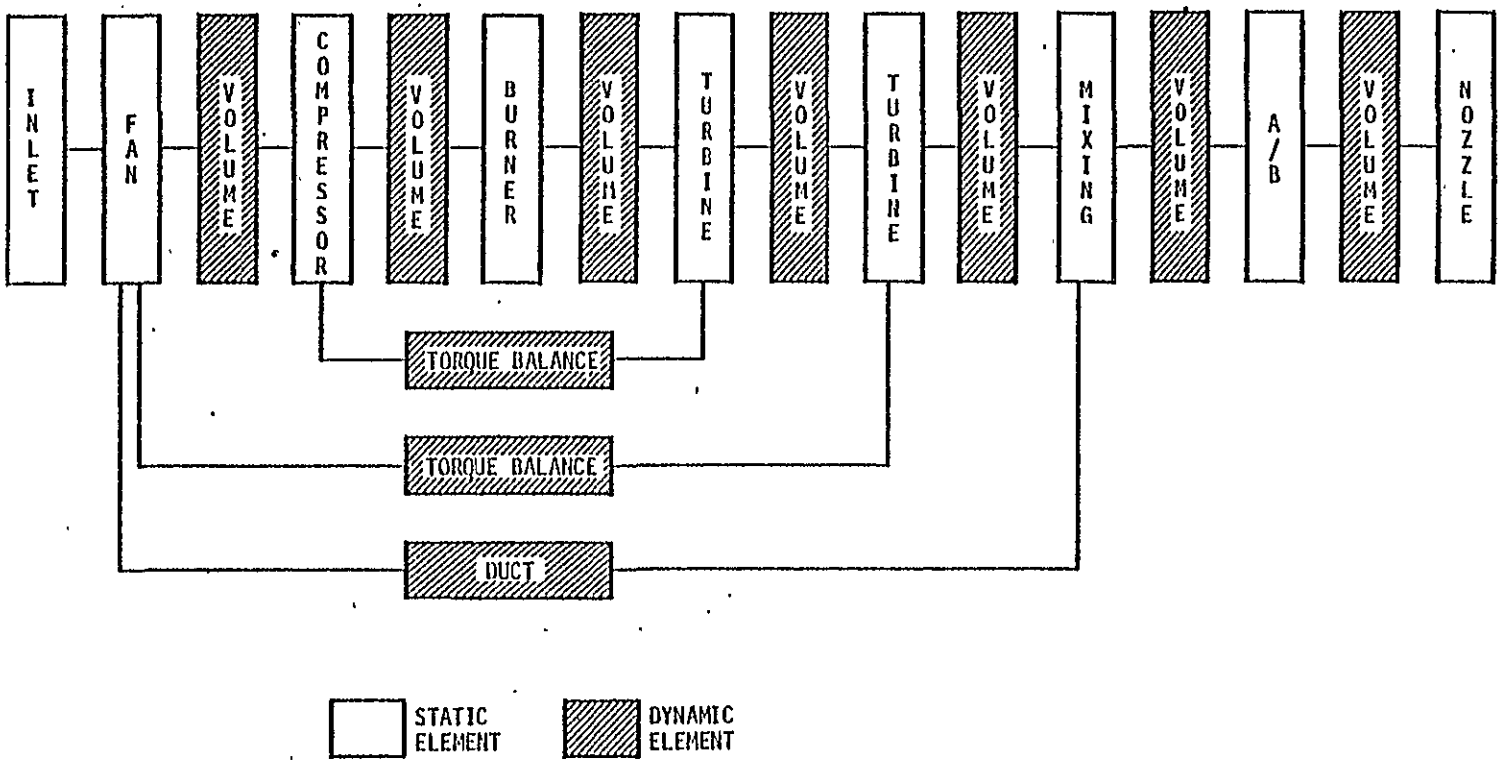

Figure 2.3 Typical Detailed Nonlinear Simulation Computational Flowpath

considering the available measurement data and the type of inputs provided. The development starts with a complete analysis of possible dynamic effects. Data is examined and unimportant or unexcited phenomena are removed. The remaining model terms are examined for bandwidth of response relative to the simulation requirement. High frequency effects can be neglected. The resulting system represents a description of the response including both steady-state and dynamic performance whose parameterization is available from recorded measurements. This model will provide an excellent component module in an overall aircraft simulation used as a preliminary tool in the design of outer loop integrated control functions such as flight direction, autothrottle and SAS.

2.3 CURRENT SPEY ENGINE MODEL IN THE AWJSTOLRA SIMULATION

The engine model used on the AWJSTOLRA simulator is shown in Figure 2.4 (a detailed listing is included in Appendix B). The throttle setting at the input to engine control, δ_{TH}, differs from the commanded value by a hysteresis function (not shown) which models the mechanical backlash. Two forward paths model accelerations and decelerations. This form is used because the engine control accelerates the turbine using a different control law than the one used during decelerations as is discussed in Section 2.4. The forward paths modulate variable rate limits for the first order lag system which produces the lagged or virtual throttle position, δ_{VTH}, as the output. The acceleration rate limit is low at low power and increases at higher power levels. This increased rate limit is lagged by the fuel metering time constant, τ_1, which is discussed in Section 2.4. The deceleration path has a small signal time constant which is 60% of the acceleration time constant. This represents a parameter used to match observed full throttle transients. It is <u>not</u> internal to the engine, since for small inputs, the engine acceleration and deceleration

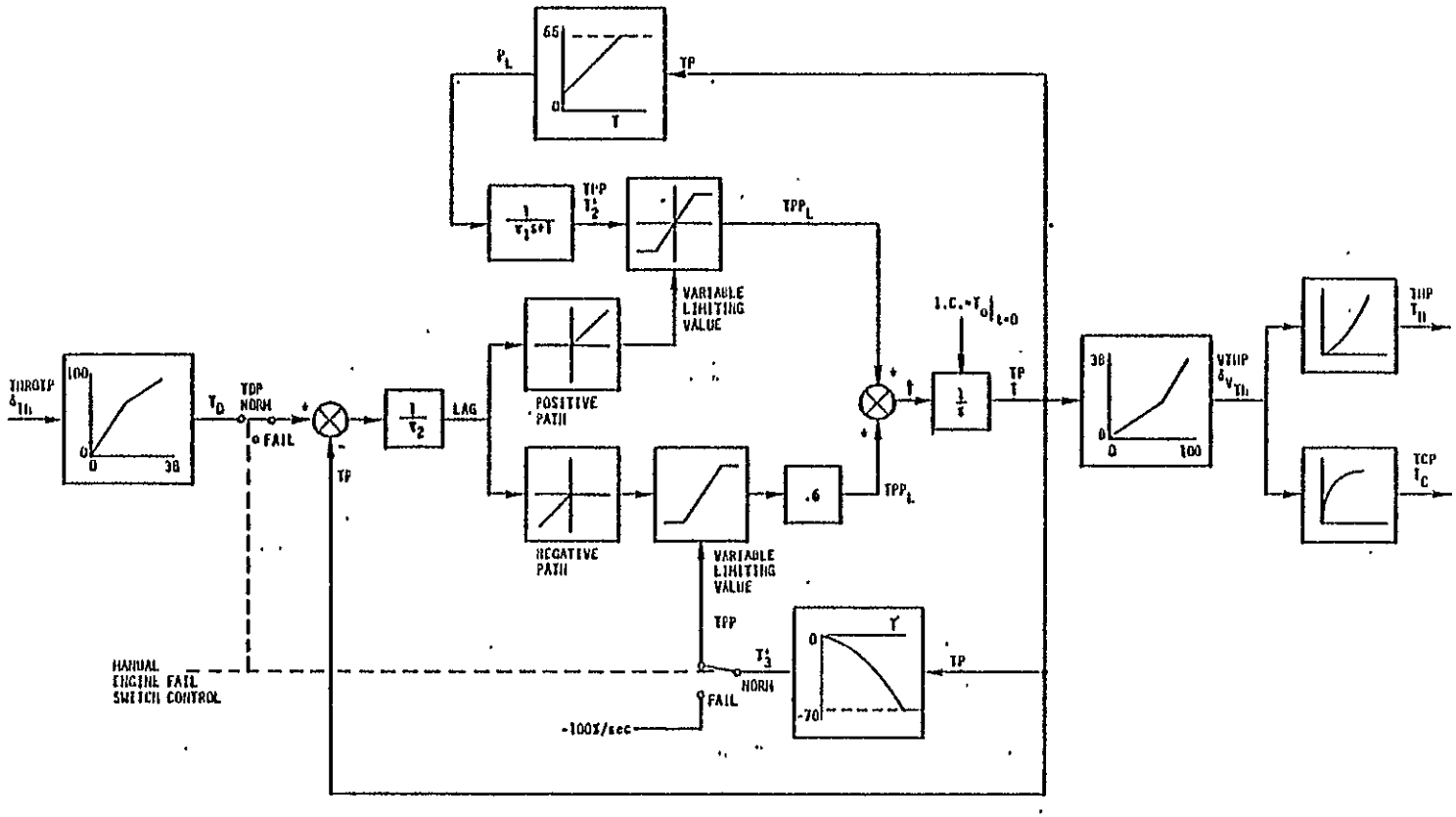

Figure 2.4 Current Spey Engine Model in AWJSTOLR Aircraft Simulation

time constants are the same. Stated another way, the engine can be modeled as a linear dynamic system for reasonably small inputs. The deceleration rate limit decreases at lower powers. Figures 2.5 and 2.6 show typical sea level static acceleration/deceleration time responses. Note that the form of the model in Figure 2.4 is dictated by the response rather than fundamental system phenomenology describing the behavior.

It can be observed from the model that, at power levels above about 65% thrust, the engine is operating away from the rate limits for most inputs. Removing these blocks from the figure produces a simpler view of the equivalent high power representation of the system. This is shown in Figure 2.7. The system is quite simply represented, but is fundamentally nonlinear since the loop gain and time constant depend on the sign of the power transition.

The model in Figure 2.7 uses steady-state representations to calculate the mass flow and thrust. This is equivalent to the assumption that the engine maintains its steady-state rotor speed match during nonsteady operation. This assumption is not correct. Cold and hot thrust are determined by the fan airflow and core airflow which have independent degrees of freedom.

In summary, the possible problems in utilizing a model of the form of Figures 2.4 and 2.7 are as follows:

(1) A nonphenomenological representation of behavior leads to false conclusions such as a fundamental nonlinearity of response.

(2) A small number of degrees of freedom produce poor transient matches.

(3) Matches of engine response between arbitrary endpoints are uncertain and the number of parameters in the model is insufficient for adjustment.

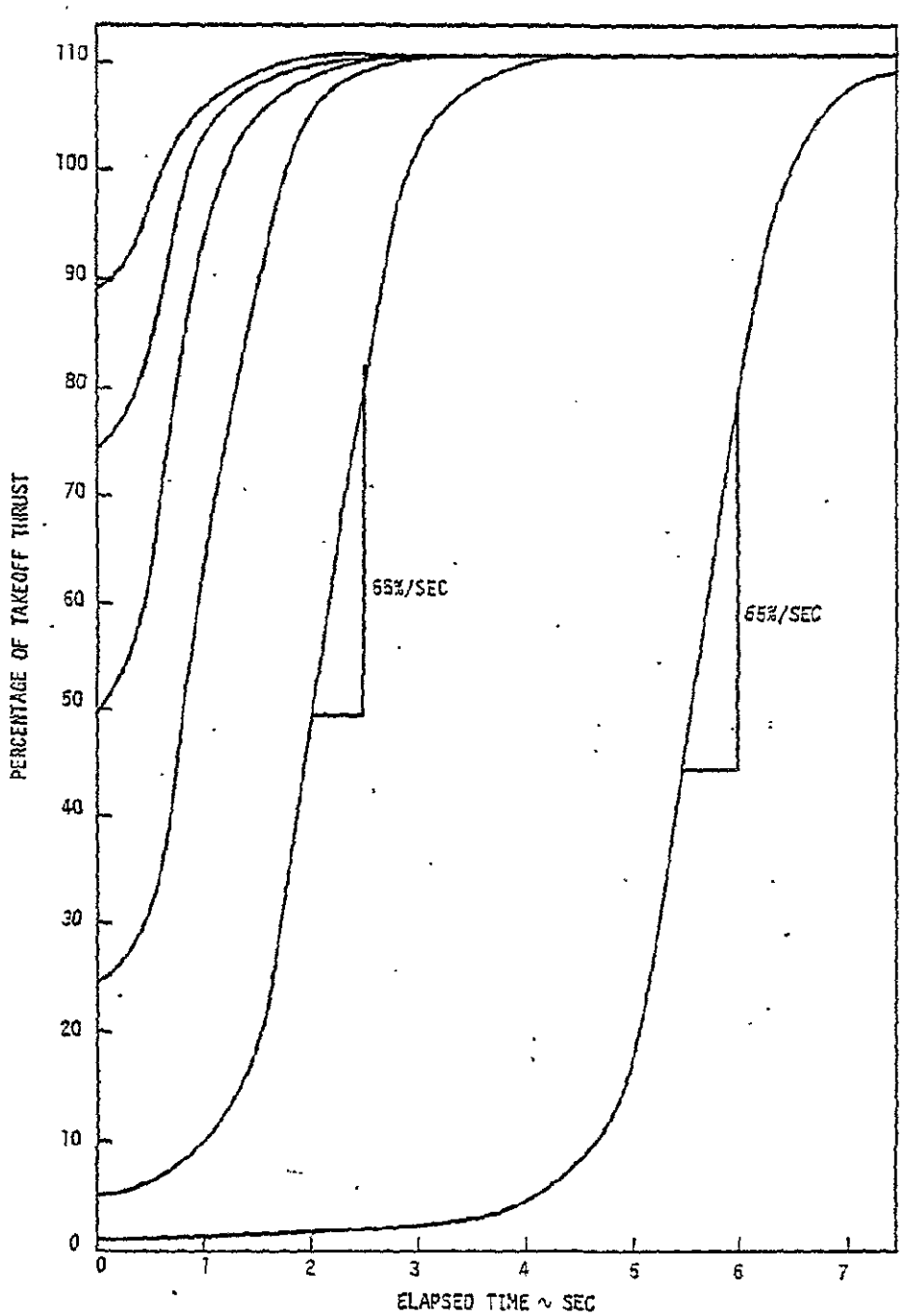

Figure 2.5 Engine Test Stand Acceleration Characteristics

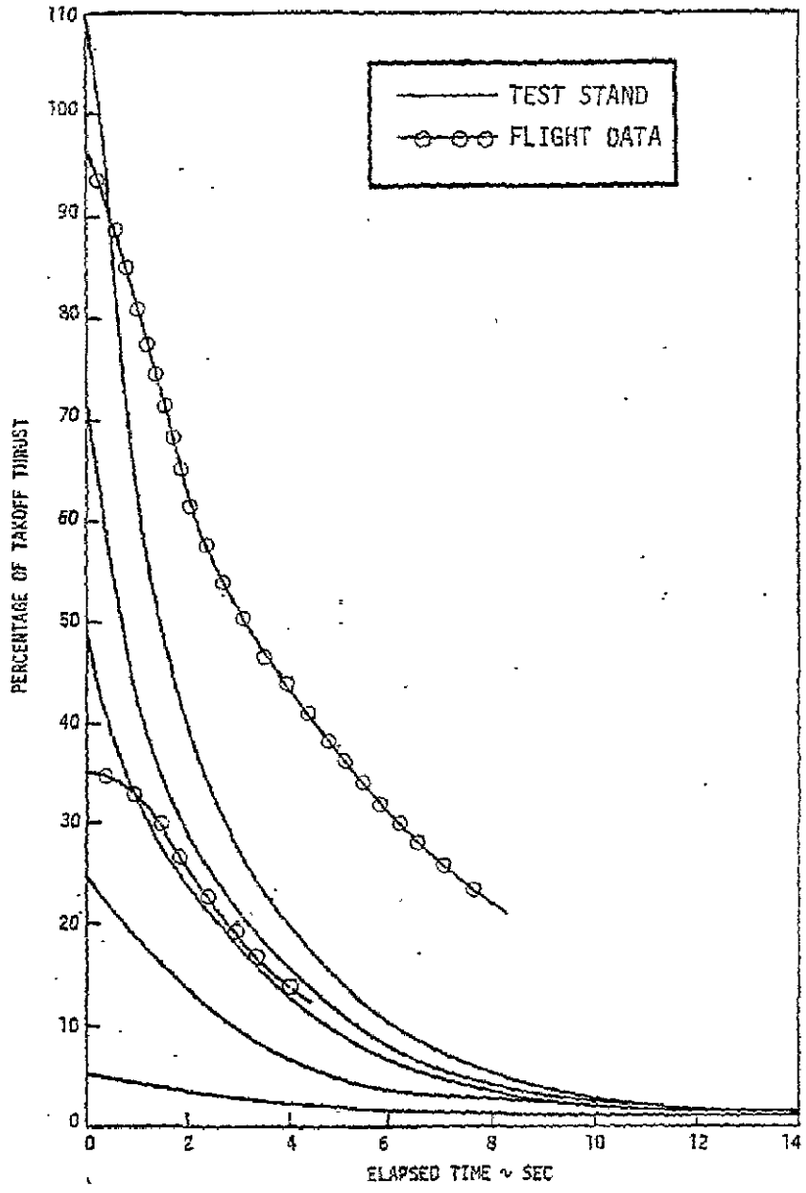

Figure 2.6 Engine Test Stand and Flight Test Decelerations to Idle

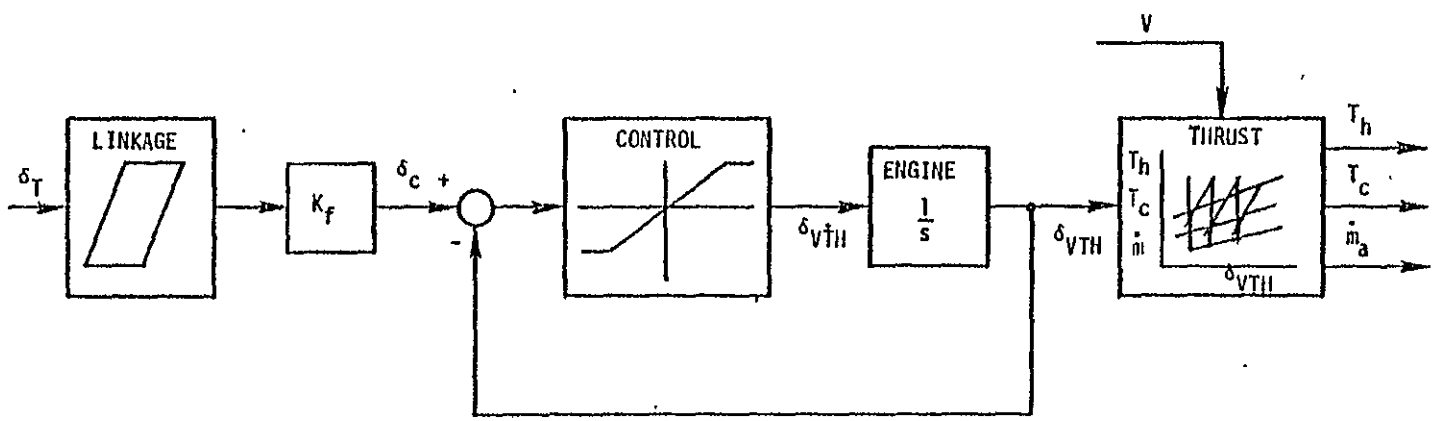

Figure 2.7 Simplified High Power Model

2.4 DETAILED MODEL OF THE ENGINE

The Spey engine is characterized by a group of nonlinear dynamical elements: (a) the engine, (b) the fuel control, and (c) the throttle linkage. Models representing each of these elements can be derived for the individual physical members in the system. Simple analysis of each component produces approximate parameter values. The model can be simplified for identification to contain only those elements which can be estimated from the flight data. The development of the detailed engine model will be described in this section.

The dynamics of the engine in the region near full power are nearly linear. Small perturbations in the state of the engine are characterized by the two rotor speeds. Previous analysis of turbofan engine dynamics has verified the linearity and the structure of the linear system representing this behavior [3,4].

Since the engine has no variable geometry <u>in the gas path</u>, the primary dynamic exciter is the fuel flow which is metered by the hydromechanical governor. Fuel is chemically converted to heat in the combustor. This provides excess energy at the turbine entrance. The combustor lag is typically on the order of 0.5 to 2.0 msec and is therefore much faster than the dominant system response. The gas temperature at the entrance to the turbines is converted into work by the expansion through the rotating turbines. This energy is used to drive the compressor on the high rotor shaft and the fan on the low rotor shaft. The dominant engine dynamical states can be associated with the rotating inertia of these elements. Newton's law for the shafts can be written in terms of the speeds and torques as follows:

$$\dot{N}_H = \frac{1}{I_H} (Q_{HTURB} - Q_{COMP}) \tag{2.1}$$

$$\dot{N}_L = \frac{1}{I_L} (Q_{LTURB} - Q_{FAN}) \tag{2.2}$$

where $(\ )_H, (\ )_L$ refer to the high pressure and low pressure component shafts. The torques are determined from the mass flow and pressure change across the component. The form of the expression is given below (for a compressor)

$$Q = \frac{T_{IN}\dot{m}(P_R^{\gamma-1/\gamma}-1)}{\eta_c N} \tag{2.3}$$

where the compression ratio, P_R, is determined by flow equilibrium through the engine and duct.

These equations can be used as the basis of a global nonlinear model of the engine. Nonlinear maps and detailed dynamical representation of nonequilibrium flow can model the continuity, energy and mixing phenomena occurring in the gas path. These terms can be considered negligible if one is interested in system bandwidths of flight control, engine and autothrottle function.

For modeling the engine behavior during moderate speed excursions, a linear set of dynamical equations provides an accurate representation. The form of the system can also be simplified to second order for most turbofans by considering the physical character of the motion. For perturbation of fuel flow with bandlimited content, the two engine spools will accelerate in a collective fashion. For perturbation in fan loading due to variations in duct pressure or inlet distortion, the fan speed will tend to "relax" toward equilibrium independently of the compressor. Using these observations, or equivalently calculating the relative magnitudes of the component map slope terms [5] such as

$$\frac{\partial Q}{\partial N},$$

the qualitative analysis can be verified.

The linear system of constant coefficient equations which is constructed for the engine is shown in a Laplace transform block diagram in Figure 2.8 and collected in state variable form as follows:

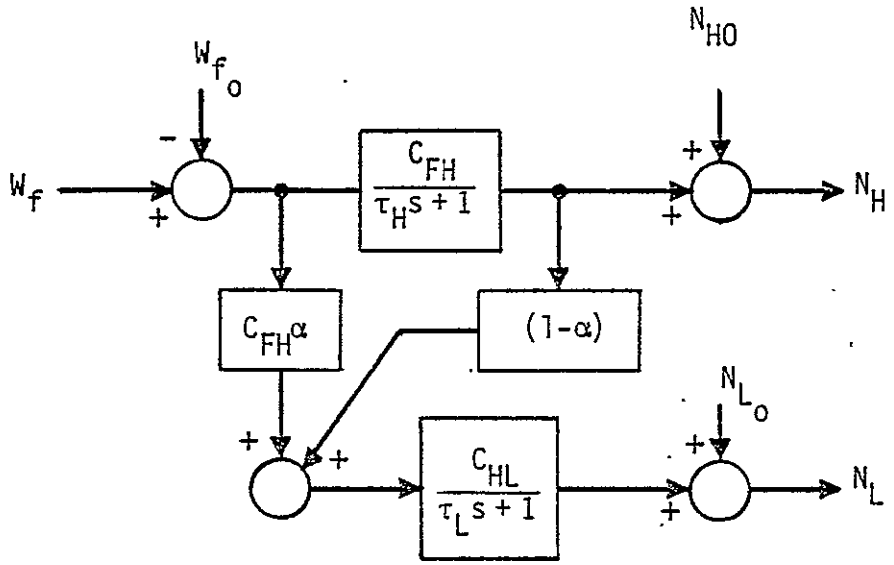

Figure 2.8 Linear Engine Model

$$\begin{bmatrix} \delta\dot{N}_L \\ \delta\dot{N}_H \end{bmatrix} = \begin{bmatrix} -1/\tau_L & C_{HL}(1-\alpha) \\ 0 & -1/\tau_H \end{bmatrix} \begin{bmatrix} \delta N_L \\ \delta N_H \end{bmatrix} + \begin{bmatrix} \alpha C_{FH} C_{HL} \\ C_{FH} \end{bmatrix} \delta W_f \quad (2.4)$$

where the five linear parameters, τ_L, τ_H, C_{HL}, C_{FH}, and α represent the dynamical behavior of the engine.

The dynamical equations are written for perturbations away from an equilibrium condition. A typical choice for this equilibrium point is 100% power.

In the Spey configuration on the AWJSTOLR aircraft, the ducting arrangement can cause the engine dynamics to be more uncoupled than the normal mixed flow path configuration. The fan flow is completely ducted to the active lift devices on

the wings. Back pressure effects on this flow will greatly affect fan response characteristics. The core stream exhaust is modified by a colander plate at the low pressure turbine exit. This plate provides choked exit conditions at all flight/power points and nozzle attitudes. The effect of nozzle motion on the flow is greatly reduced by this device.

The flow equations modeling the pressure phenomena can be written from the continuity equations as follows:

$$\dot{p} = \frac{\gamma RT}{V} \Delta\dot{m} \tag{2.5}$$

where $\Delta\dot{m}$ is the difference between inflow and outflow rates. This equation represents a flow lag effect and for small changes in power, the equation for the pressures in the duct and nozzle can be written:

$$\delta\dot{p}_D = \frac{-1}{\tau_D} \left(\delta p_D - K_{DL}\delta N_L\right) \tag{2.6}$$

$$\delta\dot{p}_E = \frac{-1}{\tau_E} \left(\delta p_E - K_{EH}\delta N_H\right) \tag{2.7}$$

where the temperature dependence is ignored and the mass flows are modeled as linear functions of the perturbational rotor speeds which feed the volumes. Unlike the normal turbofan configuration, there is no flow coupling back through the duct to the fan from the nozzle volume. It is expected that the flow time constants will be small compared to the rotor lags, but because of the usual configuration, they will be retained in the model.

For power levels typical of the approach configuration, the Spey engines themselves do <u>not</u> represent the largest source of nonlinearity. The throttle linkage and hydromechanical fuel control represent the limiting elements in the linearity of the response. The components are quite complex

and accurate representations of the internal dynamics are difficult to reconstruct from flight data.

Engine power requests from the cockpit are transferred by a mechanical linkage driven by an electromechanical force servo. The cable moves the throttle arm at the engine. About a 15° rotation of the linkage represents the full idle - to maximum forward power excursion. The system contains a moderate amount of hysteresis which affects the small inputs typical of the autothrottle landing commands. Figure 2.9 shows the representation of the throttle linkage and the nonlinear equations are written below. This calculation is performed at each update time in the simulation.

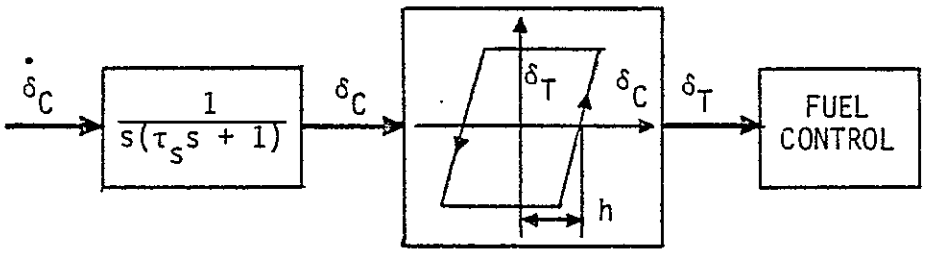

Figure 2.9 Throttle Linkage Model

$$\delta_T(n+1) = \begin{cases} \delta_c(n) - h & \delta_c(n) > \delta_T(n) + h \\ \delta_T(n) & \delta_T(n)-h \leq \delta_c(n) \leq \delta_T(n)+h \\ \delta_c(n) + h & \delta_T(n)-h > \delta_c(n) \end{cases} \tag{2.8}$$

The hydromechanical fuel control is the most complex nonlinear element of the system. Figure 2.10 shows the speed control and high pressure (H.P.) fuel pump. These systems affect the dominant response of the governor. A description of the elements of governor operation is included to put the detailed analysis into perspective.

The fuel control meters fuel to engine in response to throttle inputs and engine demand. Instability, temperature, speed, and airflow constraints are accommodated while producing specified performance at different temperatures, altitudes and speeds.

Fuel is supplied from the tank via a low pressure pump, filter, and flow meter to the high pressure (H.P.) pump entrance. Fuel is metered through the control to the fuel spray nozzles in the combustor. The pressure drop across the governor controls the fuel rate and this quantity is the primary actuated variable. Airflow limits, fan overspeed, temperature limits and emergency cutoff functions are performed by elements which are peripheral to the governor and not significant in the approach regime at near sea level conditions (the engine is not temperature limited at this condition

The dynamical elements of the governor consist of the bellows assembly, speed governor, pressure drop governor and H.P. pump. Each element will be discussed and the appropriate model given. Figure 2.10 shows a schematic diagram of the pump and fuel control.

The main element of the fuel system is the H.P. pump. This variable displacement device is constrained to maintain the pressure drop across the regulator by a servo piston feedback element on the pump stroke. The system is shown in Figure 2.11. The linearized equation for this system is as follows:

$$\dot{W}_f = 1/b\ [A(P_U - P_D) - k(W_f - W_{f_o})] \qquad (2.9)$$

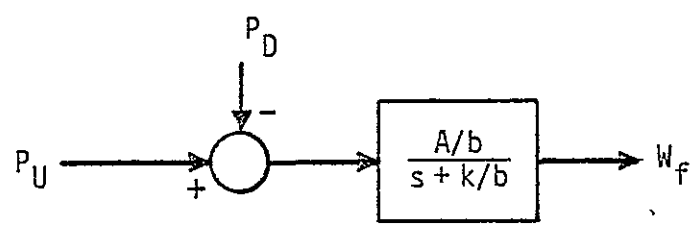

Figure 2.11 Fuel Pump Model

where the $P_U - P_D$ is the pressure drop across the governor, and b, k, and W_{f_o} describe damping and spring restraints on the piston. Fuel is metered by a pressure drop governor through a triangular orifice. The pressure drop across an orifice in a liquid flow is proportional to the square of the flow rate. By making the pressure drop proportional to the squares of the speed, a linear control governor action is achieved. A

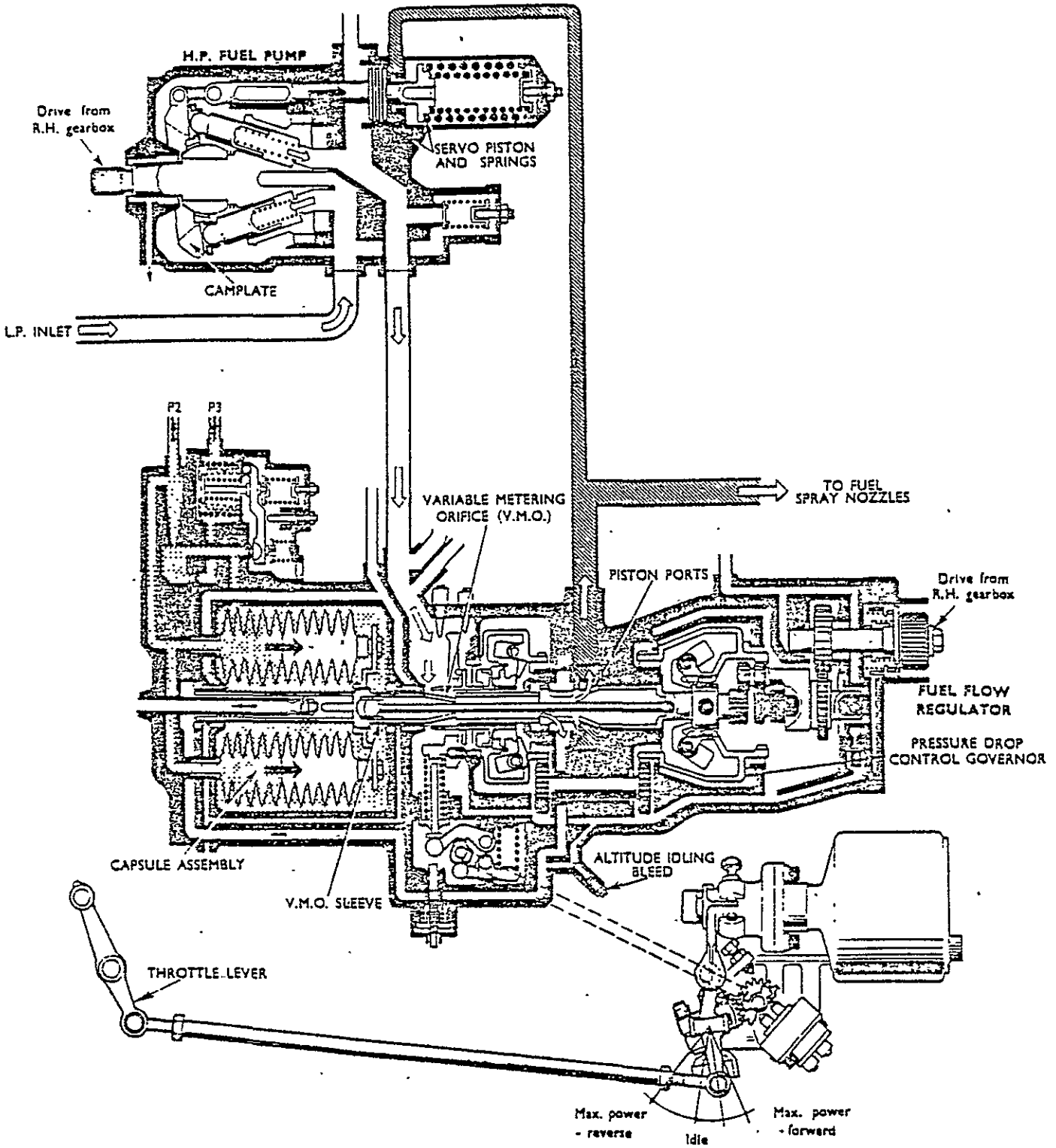

Figure 2.10 Engine Fuel Control and Pump

Watt's governor can be used for this purpose with the rotating masses suspended in the fuel to provide damping and fuel density compensation. The details of the mechanism are complex and a simplified diagram is used for the analysis.

The triangular orifice is drawn in Figure 2.12. The metering

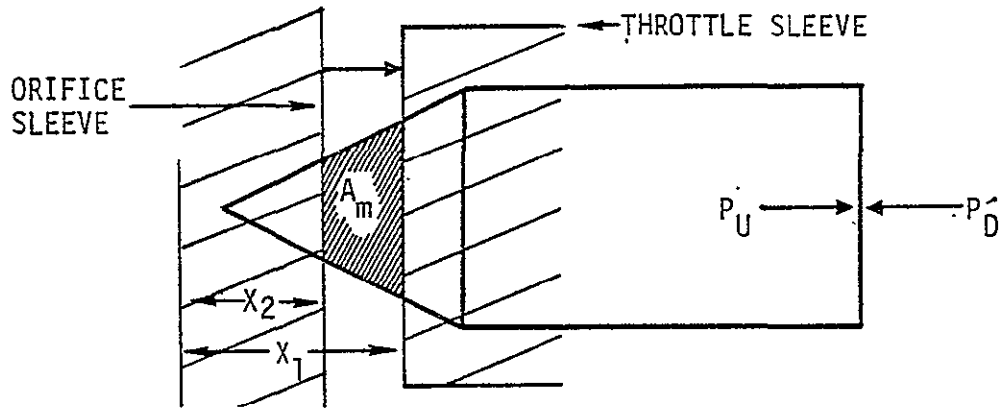

Figure 2.12 Fuel Metering Orifice

area is determined by two displacements, X_1 and X_2. The X_1 displacement measures motion of the throttle sleeve controlled by the governor and throttle springs. The position of the orifice is adjusted by compression ratio and altitude by the capsule assembly discussed below. The metering area can be written as follows:

$$A_m = C_m(X_1)(X_1 + X_2) \tag{2.10}$$

Considering only motion of the throttle sleeve,

$$\dot{X}_1 = 1/b(f_T - f_G) \tag{2.11}$$

where f_T is determined by the spring action of the throttle linkage and f_G is the restoring force due to rotation of the counterweights. These may be written as follows:

$$f_T = a_1 + k_T\ (X_C - X_1) \tag{2.12}$$

$$f_G = k_G\ N^2 \tag{2.13}$$

where X_C is the commanded sleeve position derived from the throttle inputs.

The pressure drop across the metering orifice is sensed by the pressure drop piston in the control. This piston moves an orifice in conjunction with a second set of fly weights. The orifice configuration is shown in Figure 2.13.

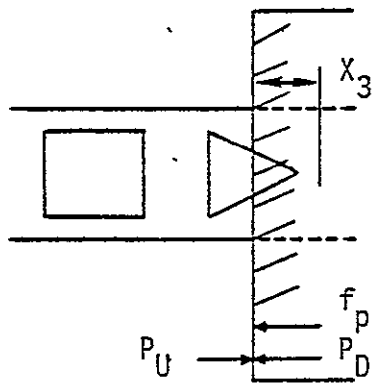

Figure 2.13 Pressure Drop Governor Orifice

and the equations of motion for this system can be written as follows:

$$\dot{X}_3 = (f_{p_D} + p_D - p_U) \tag{2.14}$$

and the total orifice area is given by the following

$$A_{p_D} = A_o - C_{p_D} X_3^2 \tag{2.15}$$

and

$$f_p = C'_{p_D} N^2 \tag{2.16}$$

The function of the governor is to provide stable, isochronous regulation at a wide range of operating conditions. Primary orifice size is limited because of dynamic range considerations. The operation can be understood by considering the static behavior.

In steady state, the pressure drop governor has the following characteristics.

$$p_U - p_D = C'_{pD} N^2 \tag{2.17}$$

$$W_f = A_m \sqrt{\rho_f (p_U - p_D)} \tag{2.18}$$

or

$$W_f = K_{AF} A_m N \tag{2.19}$$

The speed governor, which regulates the metering area, A_m, can be approximated by the following expression for small motion of X_1:

$$A_m = \bar{K}_p (b_1 + b_2 X_c - b_3 N^2) \tag{2.20}$$

and the overall control law can be modeled as follows:

$$W_f = K_p (b_1 + b_2 X_c - b_3 N^2) N \tag{2.21}$$

Note that for fixed metering error (Eq. (2.19), $A_m = \bar{C}$) the control law is unstable, i.e. increased speed increases the fuel. This occurs during large transients when the governor area is limited by the throttle stops. Figure 2.14 shows a typical large transient in the control plane. For a step input, fuel flow increases at the pump response rate to the constant area line A_2. Fuel and speed increase along this line until the required speed is reached by the selected throttle curve, δ_B. The throttle sleeve moves off the stop and the cubic speed relationship dominates the control law. The system is stable as shown. Accelerations follow the reverse logic. This method provides fast and stable fuel regulation for the Spey except at low power. Altitude variations are not compensated by the components. Note that antisymmetric rate limits will cause the engine to accelerate and decelerate at different rates for large, throttle limited power excursions.

The capsule assembly and p_3 limiter provide altitude compensation and low power acceleration limiting for the engine. A model of this system which affects the orifice sleeve position, X_2, and the metering area, is not described in detail. The

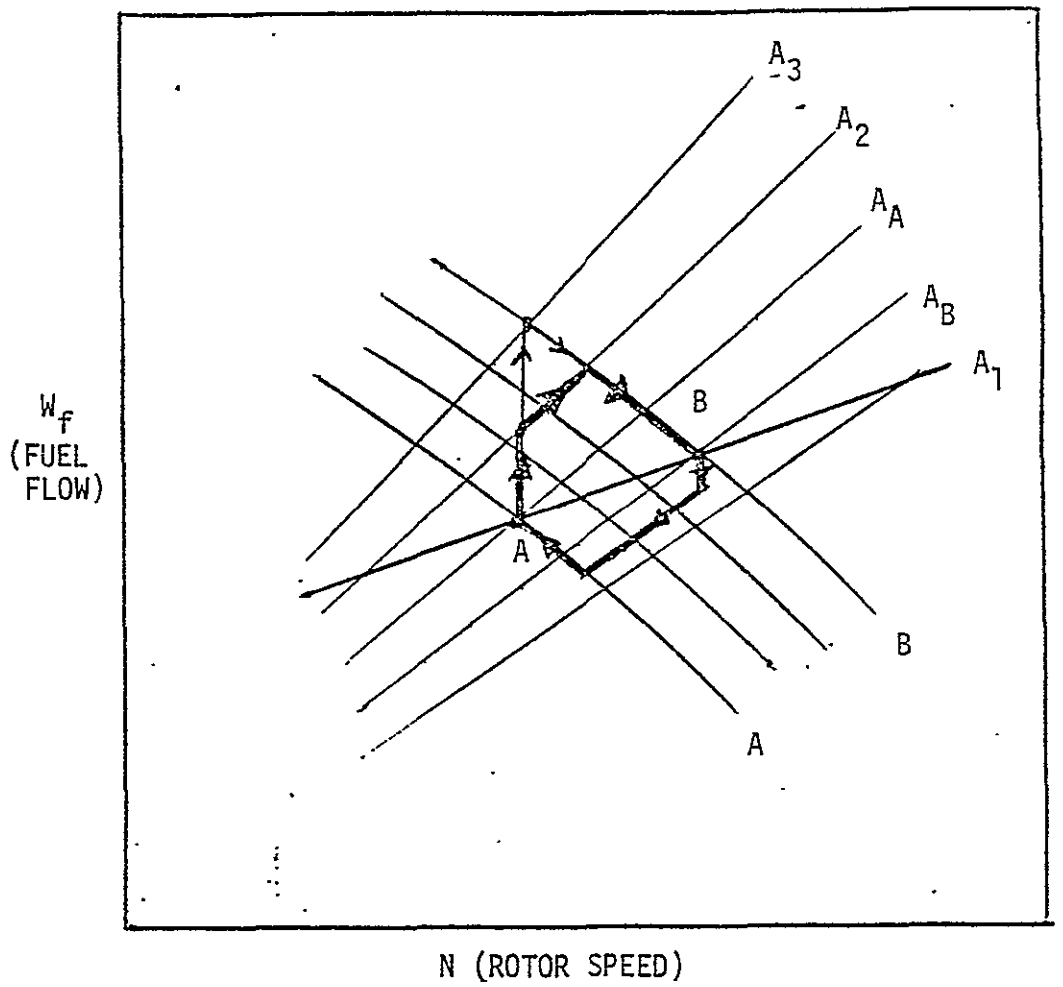

Figure 2.14 Governor Characteristic

effect of these components is most pronounced during accelerations from low power. At these conditions, the fuel flow increase is slowed considerably until the rotor speeds are increased. This limits the possibility of surge during acceleration. Hysteresis can be important during small motions of the bellows and this might affect the overall repeatability of the response.

The various component models have been interconnected in Figure 2.15. The dynamic range of many of these elements is higher than the dominant response time constants. Thus, while the dynamical relationships can be ignored, the static feedback structure of the governor will significantly affect engine response times and linearities.

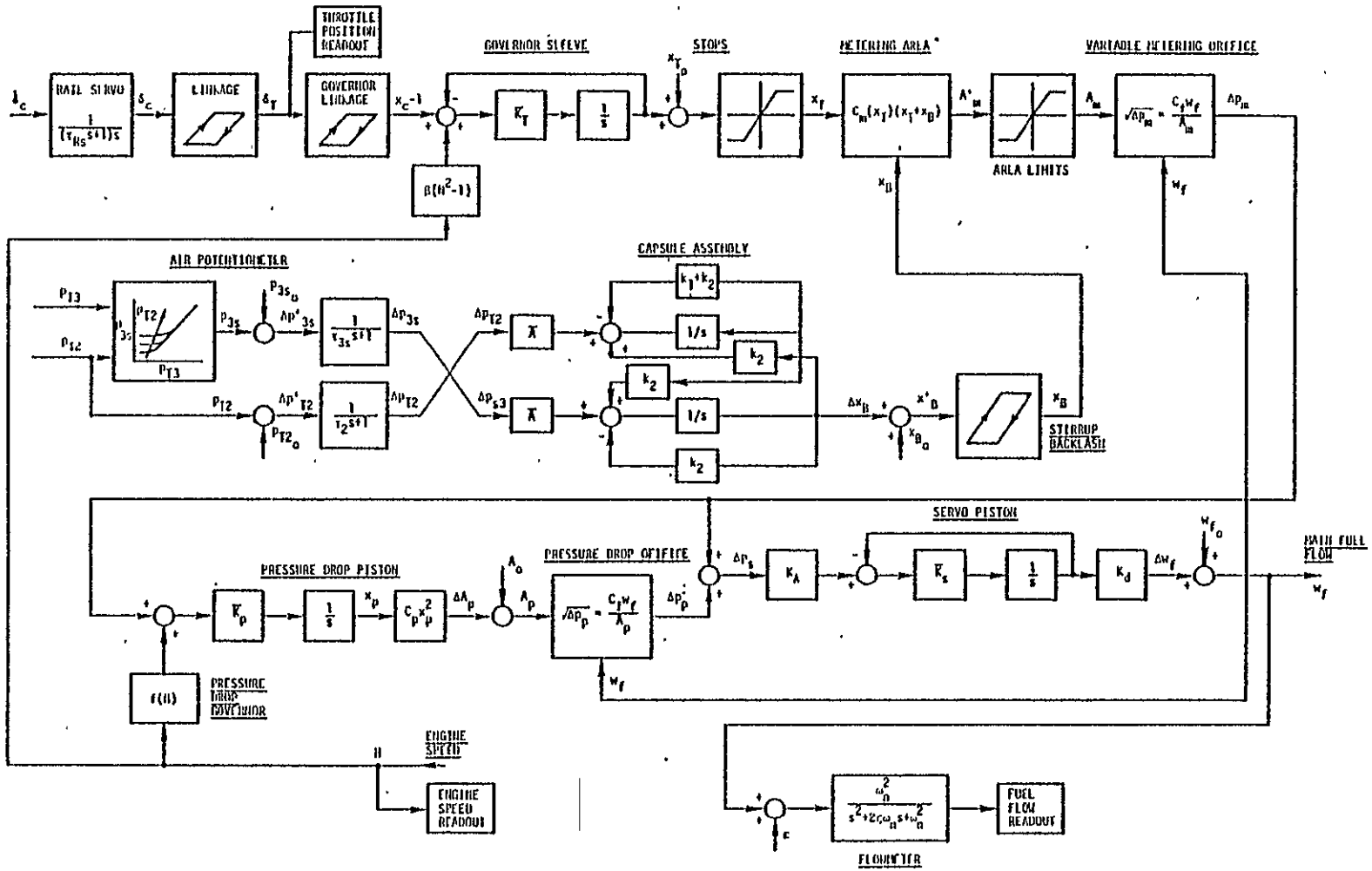

Figure 2.15 Detailed Dynamics Simulation of Spey Fuel Control

2.5 SIMPLIFIED MODEL

The system model can be simplified to include the linear model of the engine, the hysteresis model of the throttle linkage, the variable metering orifice characteristic expanded to second order and the pressure drop regulator characteristic. This system is shown in Figure 2.16.

The time constants of the electromechanical servo are between 0.05 and 0.1 seconds which is faster than the expected closed-loop engine response. Since commanded throttle and actual deflections are recorded, any relative time delay can be detected. The fuel pump response time should be faster than 0.1 seconds at high displacements. This response time is the limiting element in the overall governor response loop since fly weight motion should have response times less than 25 msec. The engine control reduces to a nonlinear feedback regulator driving a rate servo modeling the action of the pressure drop governor. Any mismatch between the forward and feedback path gains in the pressure drop system will result in a slightly stable or unstable servo loop. This gain mismatch can be lumped with the speed governor characteristic without loss of generality. The forward and feedback gains in this loop are assumed identical. The closed-loop characteristic of the pressure drop governor is a pure integration (i.e. a rate servo on the speed governor output). The nonlinearity of the metering orifice is reflected by a slightly nonsymmetric transfer characteristic. The overall hysteresis of the control after the throttle is represented by a second hysteresis block.

A further simplification of the control model is possible assuming that the transfer nonlinearity and control hysteresis are small. This is discussed further in Chapter V.

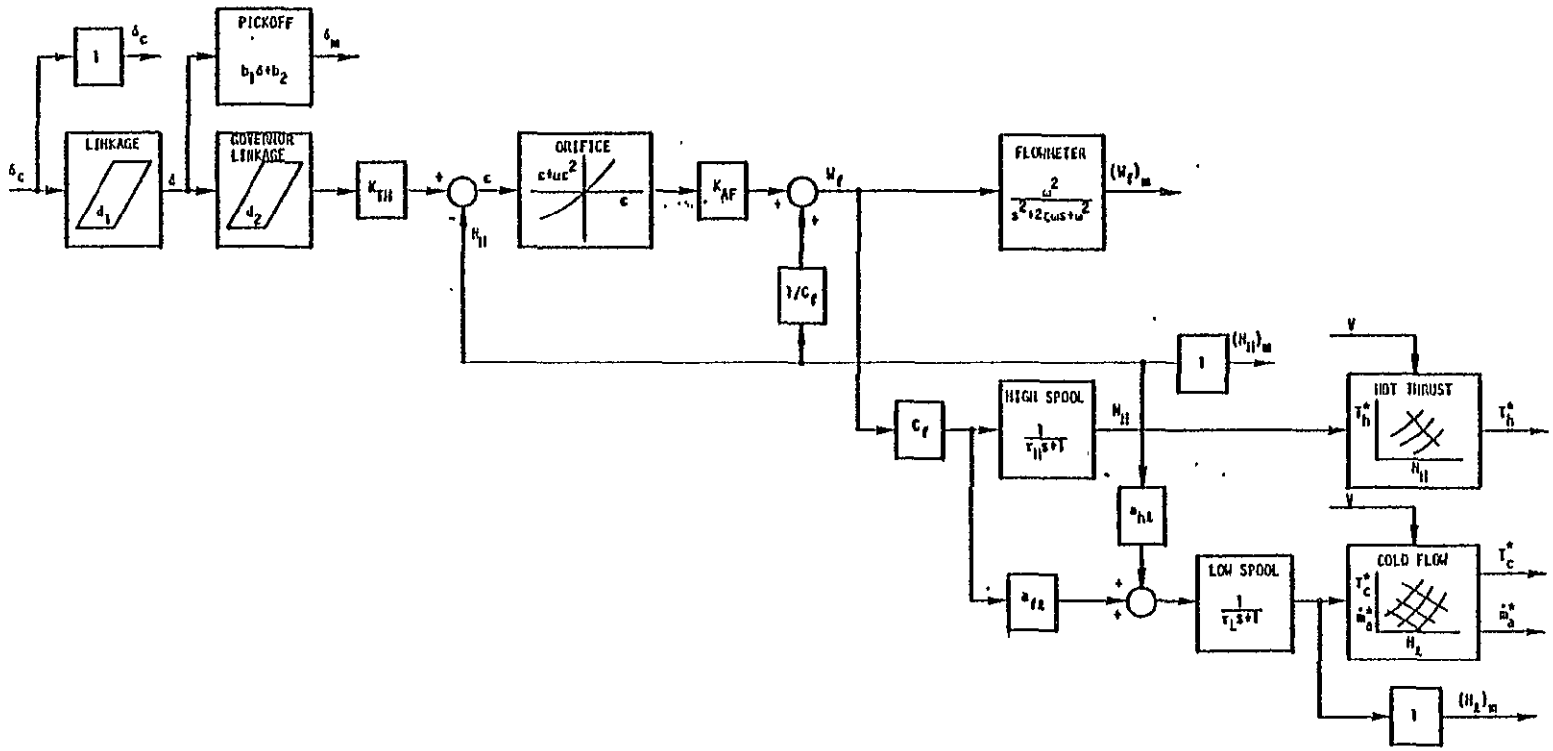

Figure 2.16 Proposed Spey Engine Identification Model

2.6 SENSOR MODELS

Data on Spey performance was acquired in flight. Instrumentation was used as listed in Table 2.1. Speed, position, and pressure transducers were assumed to respond faster than the dynamics being estimated. The measurement errors associated with these inputs can be considered uncorrelated random processes with RMS values shown in the table.

Table 2.1

Sensor List

VARIABLE	SYMBOL	RMS ERROR
Low Rotor Speed	N_L	0.5%
High Rotor Speed	N_H	0.5%
Throttle Command	δ_c	0.2 Degrees
Throttle Angle	δ_T	1.0%
Duct Pressure	P_D	2.0%
Exhaust Pressure	P_E	2.0%
Fuel Flow	W_{fm}	2.0%

The fuel flow was measured at the exit of the low pressure fuel pump. The sensor is a restrained flow turbine whose angular deflection is proportional to the turbine torque and mass flow.

The system response is lightly damped because of the small value of flow damping supplied by the turbine. The model for the flowmeter is shown in Figure 2.17.

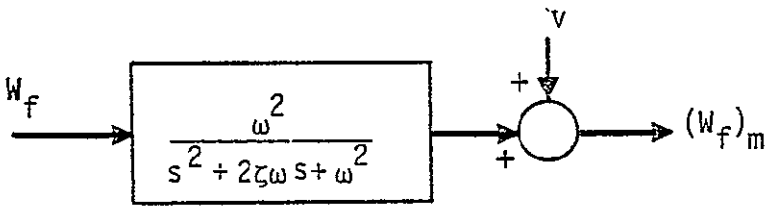

Figure 2.17 Linear Flow Meter Model

The values $\zeta = 0.2$ and $\omega_n = 13.0\ sec^{-1}$ were estimated from the flight data.

2.7 SUMMARY

A group of mathematical models has been developed for the dynamical behavior of the Spey engine. Simple non-phenomenological forms are used to match specific transients. Detailed representations of the intercomponent responses can be used to accurately predict the system response if dimensional and rig data is available. A simplified version of the detailed model is derived which contains important linear and nonlinear elements of the engine, control and throttle response for the landing approach (high power) configuration of the Spey.

CHAPTER III
PRELIMINARY PARAMETER ESTIMATES

The AWSTOLR aircraft was flown at Crow's Landing, California to acquire engine response data for parameter estimation. The data was initially evaluated to determine initial parameter estimates in the dynamic model developed in Chapter II. Important terms were identified here and data consistency was validated. A nonlinear system identification routine was incorporated with a digital simulation of the engine. This program is described in Chapter IV. The results of the processing of the flight and the parameter estimates are compiled in Chapter V.

3.1 SUMMARY OF FLIGHT DATA

Flight data was taken in the approach configuration in a powered descent from 7500 ft. The nozzles in this configuration are rotated downward and the engines are operating near full power. The flight computer was used to generate throttle rate commands to the electromechanical servo. The engine throttles were modulated in unison. Appendix B contains a description of the flight log for the two data acquisition runs. Flight time for the two runs was 124 minutes from takeoff to final landing. Data was recorded during this time on 84 instrumentation channels comprising engine, aircraft and avionics equipment sampled every 20 msec. Data records were chosen from the complete flight data for the parameter estimation. These data records are listed in Table 3.1. A set of instrumentation inputs was chosen to reflect the variables incorporated in the model. These measurements are listed in Table 3.2.

PRECEDING PAGE BLANK NOT FILMED

Table 3.1

Flight Data Records Used for Identification

RECORD	START TIME (d-h:m:s:ms)	END TIME (d-h:m:s:ms)	DURATION (SEC)	NO. OF POINTS	FLIGHT NO.	INPUT DESCRIPTION		
						RAMP RATE (DEG/SEC)	PERIOD (SEC)	AMPLITUDE (DEG)
1	295-17:59:30	295-18:02:31	181	9050	323	0.5	5	1.25
						1.0	5	2.5
						2.0	5	5.0
						3.0	5	7.5
2	295-18:10:15	295-18:11:09	53	2650	323	Moderate Size Random Input		
3	295-18:12:25	295-18:13:21	56	2800	323	0.5	10	2.5
						1.5	10	7.5
4	295-20:21:01	295-20:22:05	64	3200	324	1.5	5	3.75
						2.0	5	5.0
5	295:20:22:05	295-20:23:04	59	2950	324	0.25	50	6.25
6	295:20:24:00	295-20:25	60	3000	324	Step Inputs		

Table 3.2
Sensor List

SENSOR	ENGINE	UNITS
Throttle Command	Left	Deg
Throttle Pickoff	Left	Counts
Fuel Flow	Left	PPH
Compressor Speed	Left	RPM
Fan Speed	Left	RPM
Exhaust Pressure	Left	Counts
Duct Pressure	Left	Counts
Throttle Command	Right	Deg
Throttle Pickoff	Right	Counts
Fuel Flow	Right	PPH
Compressor Speed	Right	RPM
Fan Speed	Right	RPM
Exhaust Pressure	Right	Counts
Duct Pressure	Right	Counts

The flight data was recorded on an in-flight data acquisition unit and the digital tape processed to provide scaling, units and conversion for use on the CDC 6600 at NASA Ames Research Center.

3.2 INITIAL PARAMETER ESTIMATES

Classical techniques were used to calculate initial parameter estimates using plots obtained from the data. Four areas were investigated using left engine data: (a) steady state characteristics, (b) hysteresis, (c) rate limiting and symmetry, and (d) fan/compressor dynamics. These are discussed in the subsections below.

3.2.1 Steady State Operation

An accurate model of Spey operation must match engine static behavior in this configuration. The engine model described in Chapter II provides a linear operating line for the state and control variables. Figure 3.1 is a compilation of measured engine response at steady power points. It will be noted that the approximation of linear spool speed to throttle response above about 5 degrees throttle is quite good. However, thrust and airflow are nonlinear functions of throttle. Since these are the primary model outputs, a tabular relationship can be developed for these variables as a function of rotor speed or throttle. Table 3.3 shows these functions tabulated against compressor speed. The cold and hot thrust figures refer to the thrust developed by the exhaust flow and duct flow of the engine at an assumed equilibrium rotor speed match. During transients, rotor speeds are not matched and an alternate formulation of these curves must be developed.

An approximate set of curves for the thrust and airflow variables can be developed if it is assumed that fan airflow and core airflow are dependent only on the rotational speeds

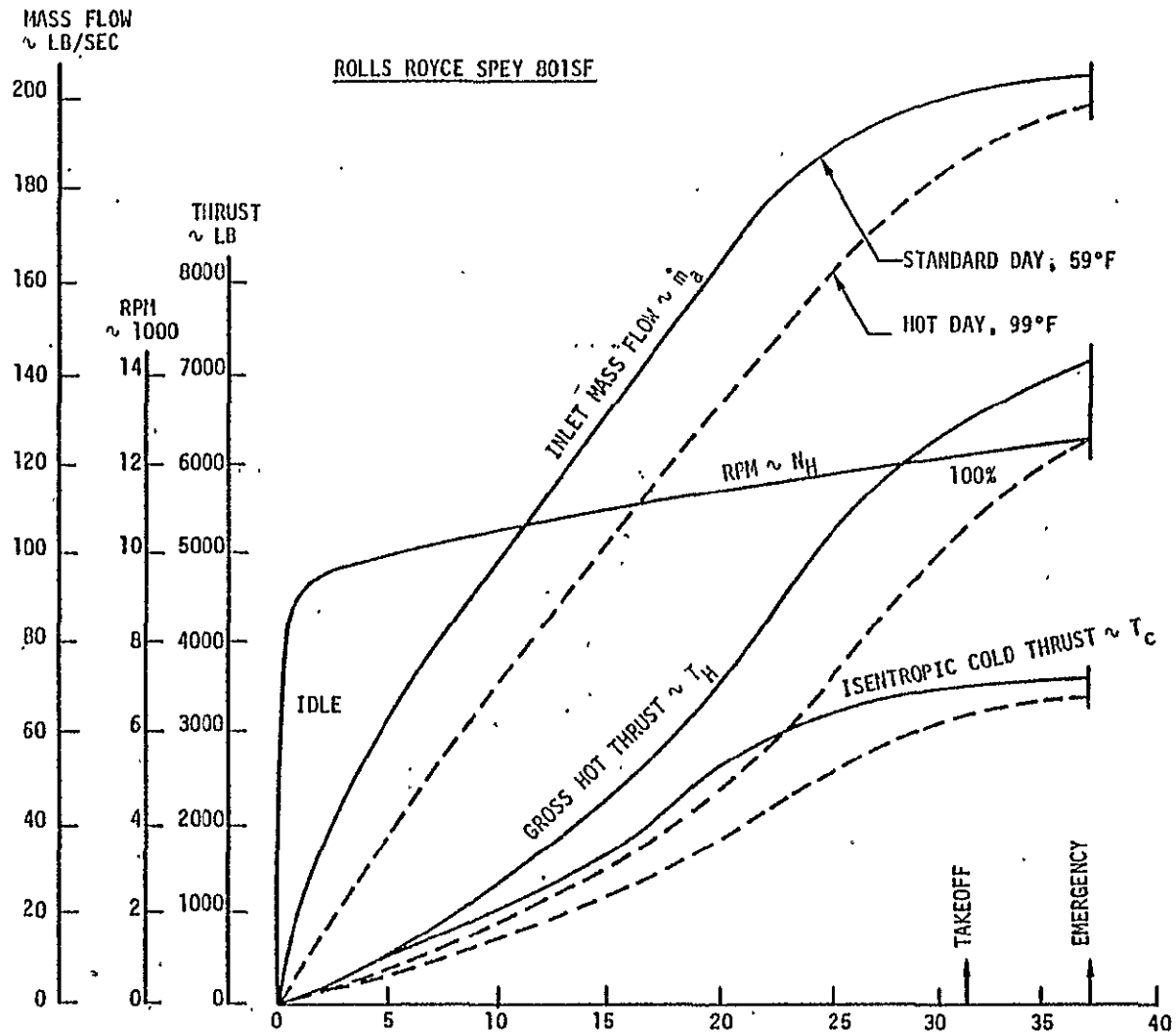

Figure 3.1 Test Stand Data for Spey Engines

Table 3.3

Spey Engine Outputs as a Function of
Steady State Corrected Engine Speed

CORRECTED HOT STREAM THRUST $\sim T_n/\delta$ (lbs_f)

% SPEED $N_L/\sqrt{\theta}$	% SPEED $N_H/\sqrt{\theta}$	INDICATED AIRSPEED - KNOTS		
		V = 0	V = 60	V = 250
0	0	0	0	0
55.0	84	1023.2	1092.1	2102.0
70.5	89.5	2402.7	2456.7	3230.0
78.9	92.5	3714.2	3763.2	4476.3
86.0	95	4834.6	4876.5	5465.0
94.4	98	5867.0	5902.6	6411.0
109.9	103.515	7013.5	7042.1	7446.7

CORRECTED COLD STREAM THRUST - T_c/δ (lbs_f)

% SPEED $N_L/\sqrt{\theta}$	% SPEED $N_H/\sqrt{\theta}$	INDICATED AIRSPEED - KNOTS		
		V = 0	V = 60	V = 250
0	0	0	0	0
55.0	84	796.7	783.7	914.6
70.5	89.5	1660.2	1666.7	1807.2
78.9	92.5	2494.5	2489.6	2668.4
86.0	95	2977.9	2954.4	3110.4
94.4	98	3301.0	3289.3	3442.9
109.9	103.515	3532.3	3554.1	3682.4

Table 3.3 (Concluded)

% SPEED $N_L/\sqrt{\theta}$	% SPEED $N_H/\sqrt{\theta}$	CORRECTED ENGINE AIRFLOW $m_a\sqrt{\theta}$/(Slugs/Sec.)
0	0	0
55.0	84.	2.514
70.5	89.5	4.003
78.9	92.5	4.964
86.0	95.	5.507
94.4	98.	5.935
109.9	103.515	6.488

of the compression elements. This is normally a more accurate assumption than the constant by-pass ratio assumed in Table 3.3. In this case, hot thrust is a function of the compressor speed only. Cold thrust and net airflow are determined by the fan speed. During transient motion each speed can vary independently.

Data is required to determine the equilibrium rotor speed match. This data was measured from the flight tape when the engine had settled at a constant power. Figure 3.2 shows this match and verifies the assumed linearity of the match in this power range. Figure 3.2 and Table 3.3 can be used to determine a new functional representation of cold thrust and mass flow plotted against fan speed. Then, during simulation, nonequilibrium fan speeds are used to calculate instantaneous cold thrust and mass flow for the engines.

Similar steady operating line data can be derived from the flight records for the intermediate simulation variables vis. fuel flow, throttle angle, and pressures as a function of the states of the simulation. Relationships derived from the data are shown in Figure 3.3 for fuel flow and throttle angle as a function of rotor speed. This line should be compared to Figure 2.14 which is the predicted linear relationship based on the governor characteristics. The operating assumptions of the linear operating linear hold quite well for this particular flight regime. Steady state linear operating equations are listed below:

$$0 = 0.7212\ (\delta_T - 31.5^\circ) - (N_H - 100\%)$$

$$N_L = 2.81\ N_H - 181\%$$

$$W_f = 7.13\ N_H - 613\%$$

$$PTD = 1.32\ N_L - 32\%$$

$$PT6 = 4.0\ N_H - 300\%$$

where the 100% values of the variables are listed in Table 3.4.

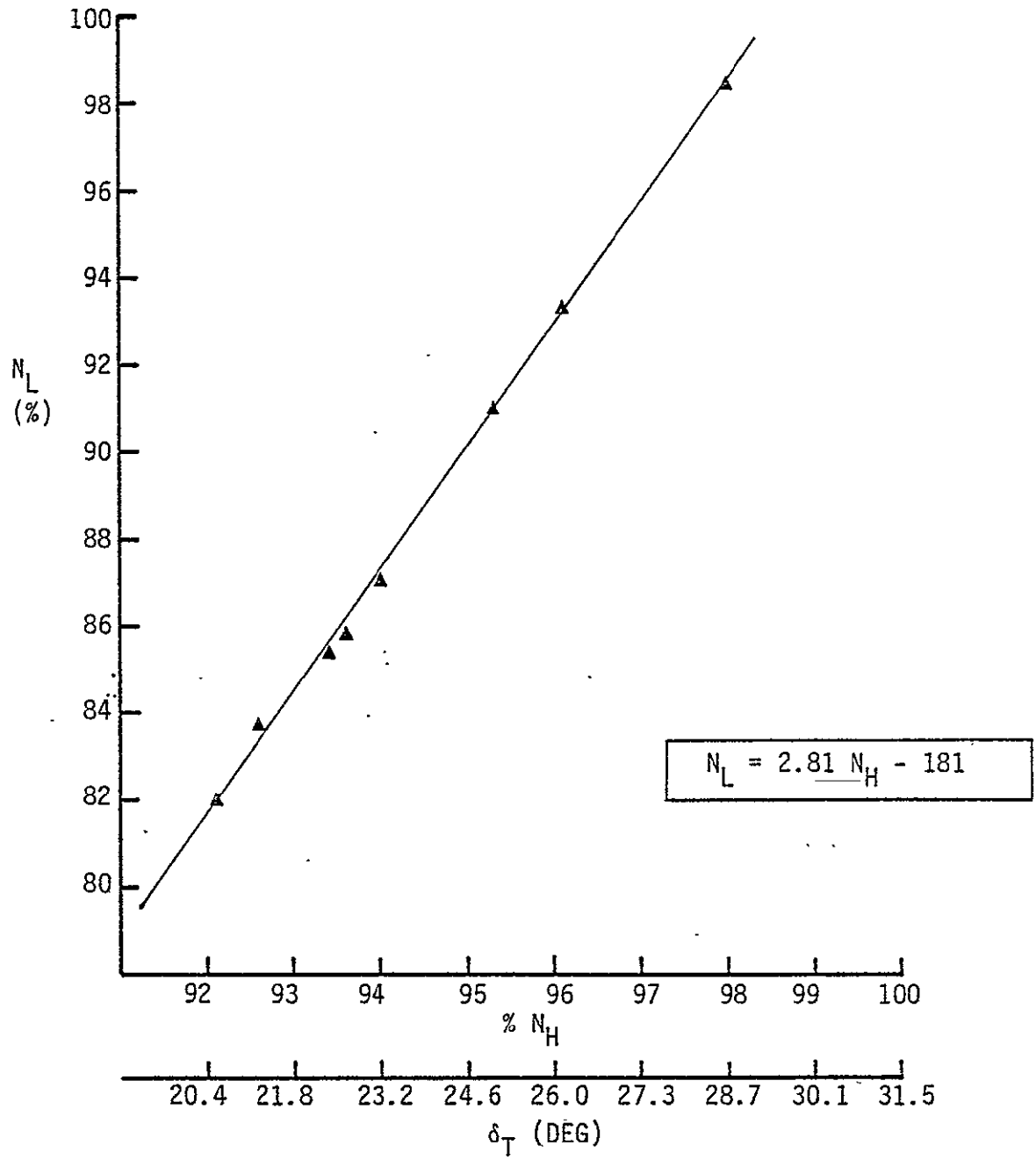

Figure 3.2 Rotor Speed Match (AWJSTOLRA Left Engine) Flight 323/324

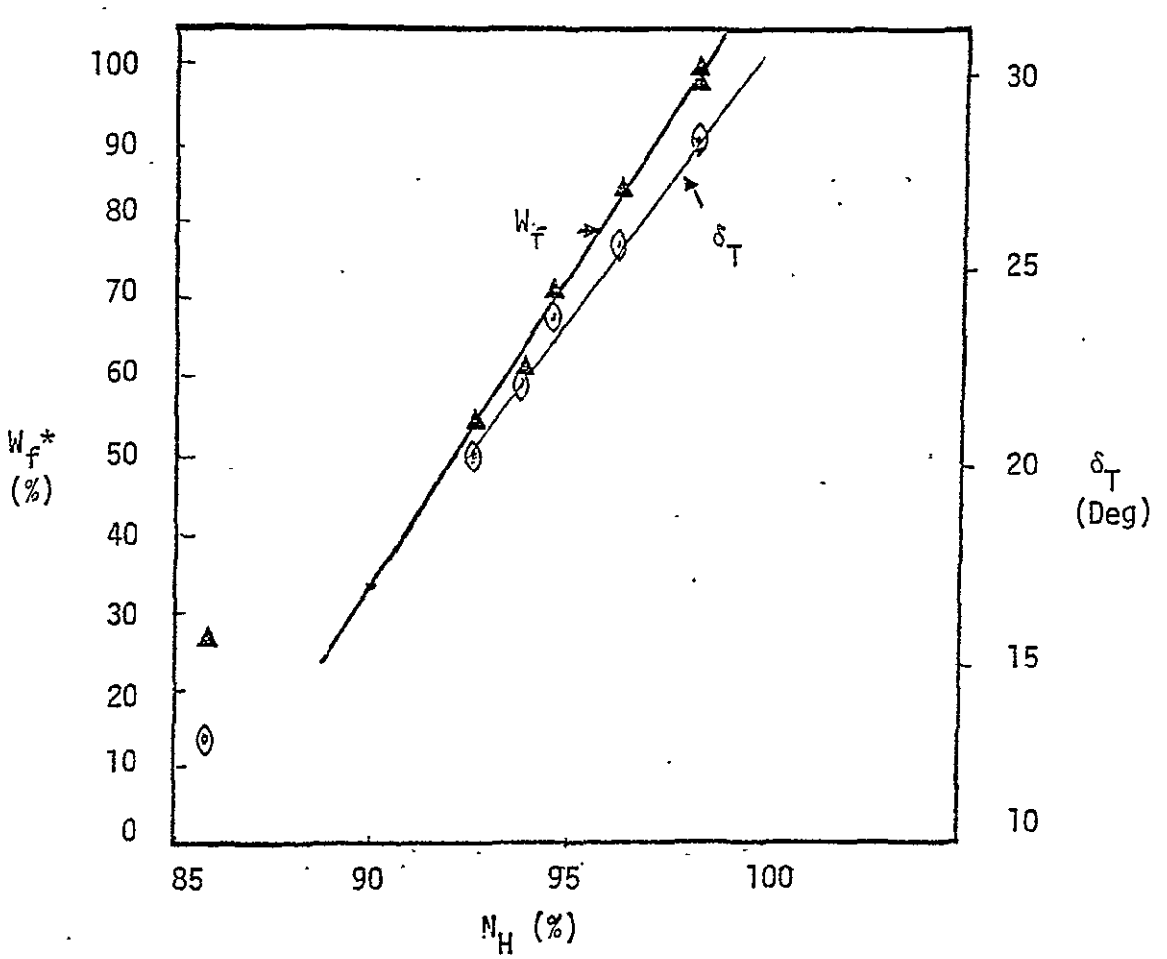

* 1% = 50 pph

Figure 3.3 Fuel Flow Steady State Data
(AWJSTOLRA Left Engine)
Flight 323/324

Table 3.4
100% Values of Engine Variables

VARIABLE	VALUE	UNITS
δ_T	31.5	Degrees
δ_{po}	-957	Counts
W_f	5000	pph
N_H	12135	RPM
N_L	10075	RPM
PT6	3775	Counts
PTD	5036	Counts

It should be noted that the operating line linearity of engine variables, e.g. the rotor speed match is predicted from previous engine experience near full power. Governor linearity is predicted from the functional characteristics of the centrifugal counter-weight forces and the square root pressure drop - mass relationship used in the metering orifice. The latter relationship can be used to derive other characteristics of this control response as is discussed in Section 3.2.5.

3.2.2 Throttle Hysteresis

Classical methods can be used to approximate the hysteresis width since data containing periodic excitation is available. The ramp inputs are sufficiently close to sinusoids that phase lag measurements can be used as a good measure of the hysteresis width. The sinusoidal describing function for hysteresis is shown in Figure 3.4. Considering

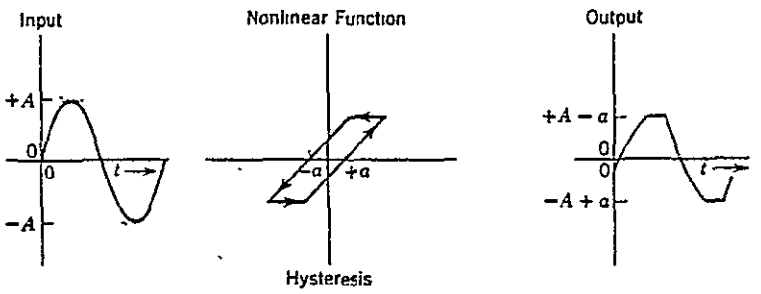

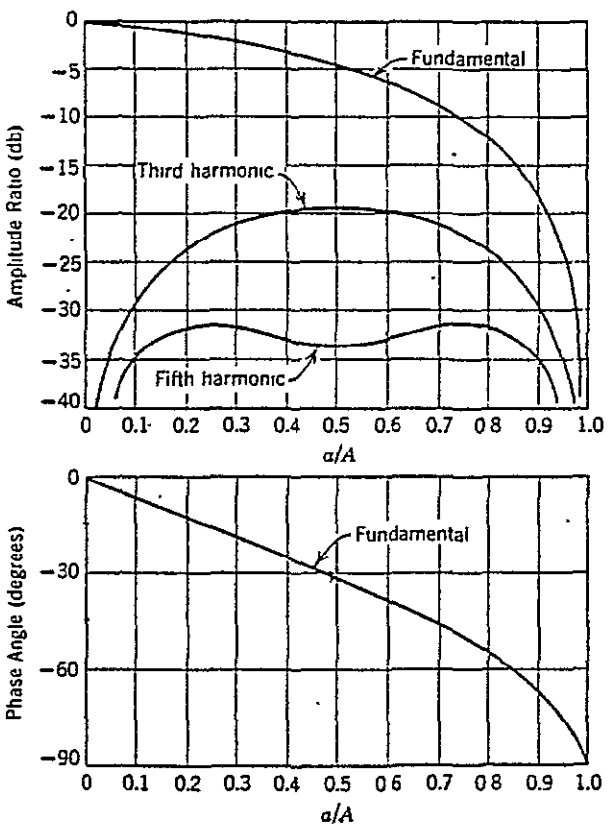

Figure 3.4 Hysteresis Describing Function Characteristic

only the phase shift characteristics, measured values can be related to the hysteresis width and input amplitude. The characteristic is independent of frequency which allows run-to-run comparison of results. The phase shift measurement allows a far more accurate estimate of the hysteresis width than amplitude roll-off when graphical data is plotted. An example of the phase shift measurement is shown in Figure 3.5. Hysteresis points were taken at several values of input magnitude and frequencies. These points are shown in Figure 3.6 with a least squares fit of the hysteresis characteristic:

$$\phi = f_H(a/A) + \phi_b$$

where f_H is shown in Figure 3.4, ϕ_b is a residual phase shift unexplained by hysteresis, and A is the amplitude of the periodic throttle inputs.

The throttle curve in Figure 3.6 shows the phase shifts, ϕ_T, between the commanded throttle input and the throttle pickoff. Since no frequency dependent lags are present, all data points can be overplotted. The fit shows the hysteresis width to be about 0.48 degrees with only 2° of phase shift unexplained by the hysteresis. This residual phase is within the accuracy bounds of the data so it can be concluded that a simple hysteresis is an excellent model of the throttle linkage.

Phase measurements were made between the high rotor speed response and both commanded and measured throttle inputs at a single frequency (ω = 1.26 rad/sec). The amplitude dependent portion of the response can be modeled as an additional hysteresis within the fuel control. The curve for the governor response indicates hysteresis width of about 0.19 degrees. This estimate may be less accurate due to nonlinearities in the governor response which will tend to cause amplitude dependent phase shifts.

The hysteresis figures calculated above can be used to <u>correct</u> the phase response of the high rotor speed to throttle

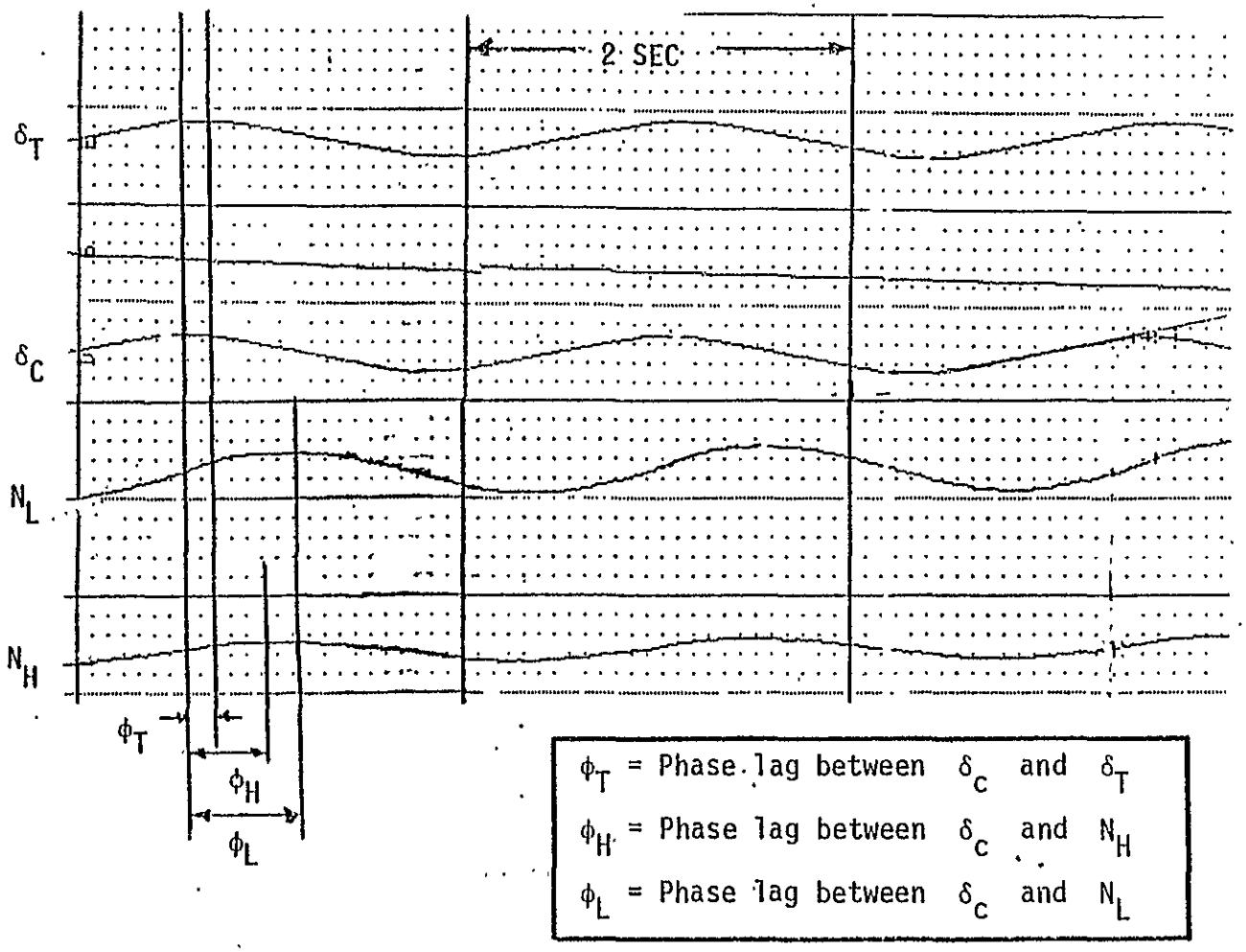

Figure 3.5 Phase Calculation for Hysteresis Estimates

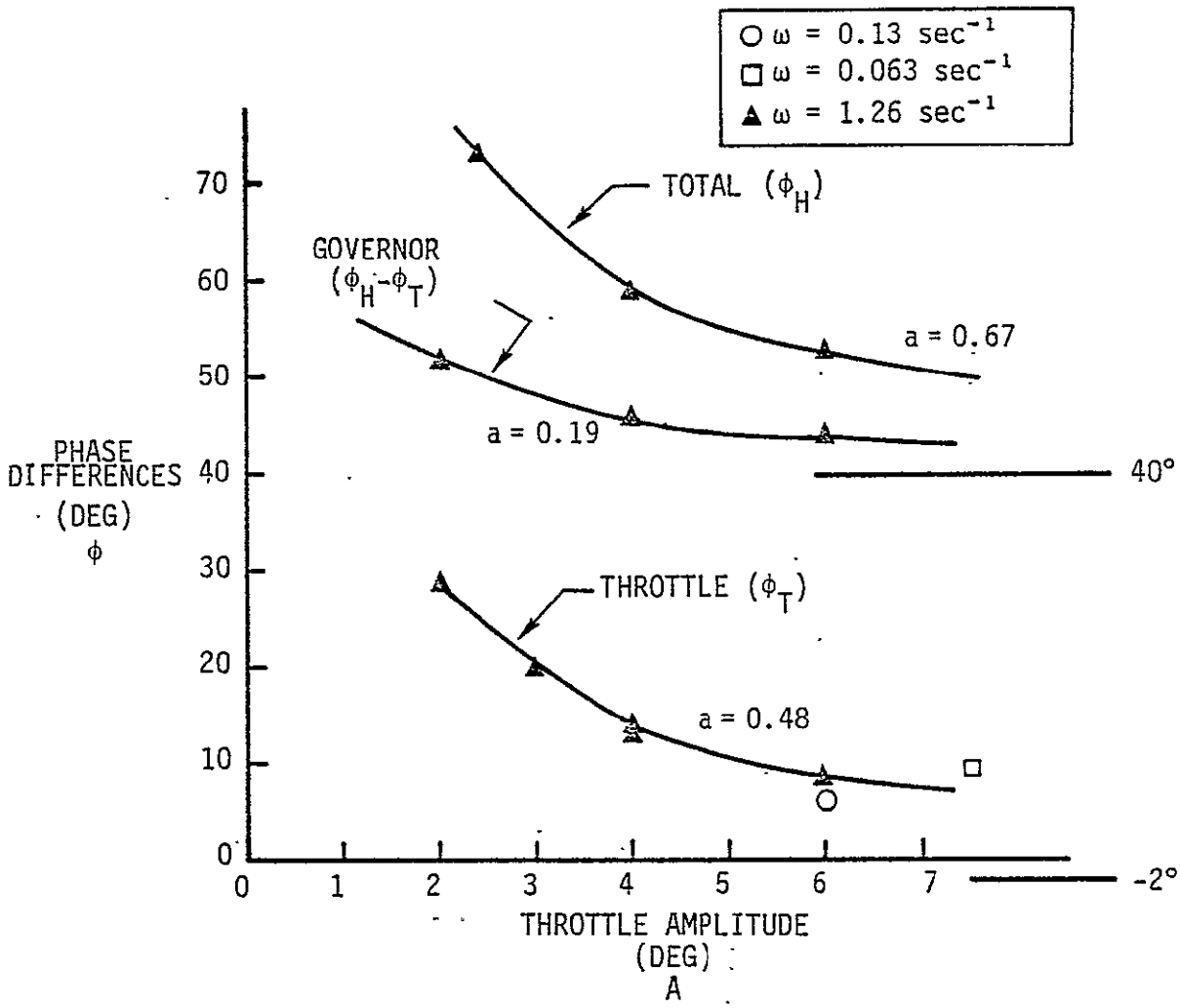

Figure 3.6 Identification of Hysteresis from Phase Lag

inputs. This is shown in Figure 3.7 for various frequencies. A fit of a first order lag phase response is shown which minimizes the sum squared error of the corrected points. The time lag associated with the fitted phase characteristic is 0.9 sec which should be close to the high rotor time constant (closed-loop).

3.2.3 Rate Limiting

The governor operation described in Chapter II indicates that throttle inputs act as rate commands to the pressure drop governor. Since the inputs during the flight test were throttle ramps, the rotor speed rates which are attained will reflect rate limiting by the governor if it exists. Rates were measured for various acceleration/deceleration magnitudes in the flight records. Rotor speed rates are plotted against throttle rates in Figure 3.8. The test run data was augmented by miscellaneous points which occurred when ramp inputs were generated as commands during the normal cockpit operation. For a linear operating line, and no rate limiting by the control, the RPM response rate should be determined by the steady state operating line as is shown below:

$$\text{(Steady State)}(N_H - 100\%) = 0.7212\ (\delta_T - 31.5)$$

$$\text{(Steady Rate)}\quad \dot{N}_H = 0.7212\ \dot{\delta}_T$$

This line is drawn on the figure. The results show good correspondence to the predicted operation of the control. For throttle rates less than 5.5 deg/sec during accelerations or decelerations, the governor characteristic is linear. Rate limiting occurs at higher throttle input rates due to the saturation of the throttle sleeve on the stops. It appears that the acceleration and deceleration stops are not symmetrically adjusted so that large engine declerations are

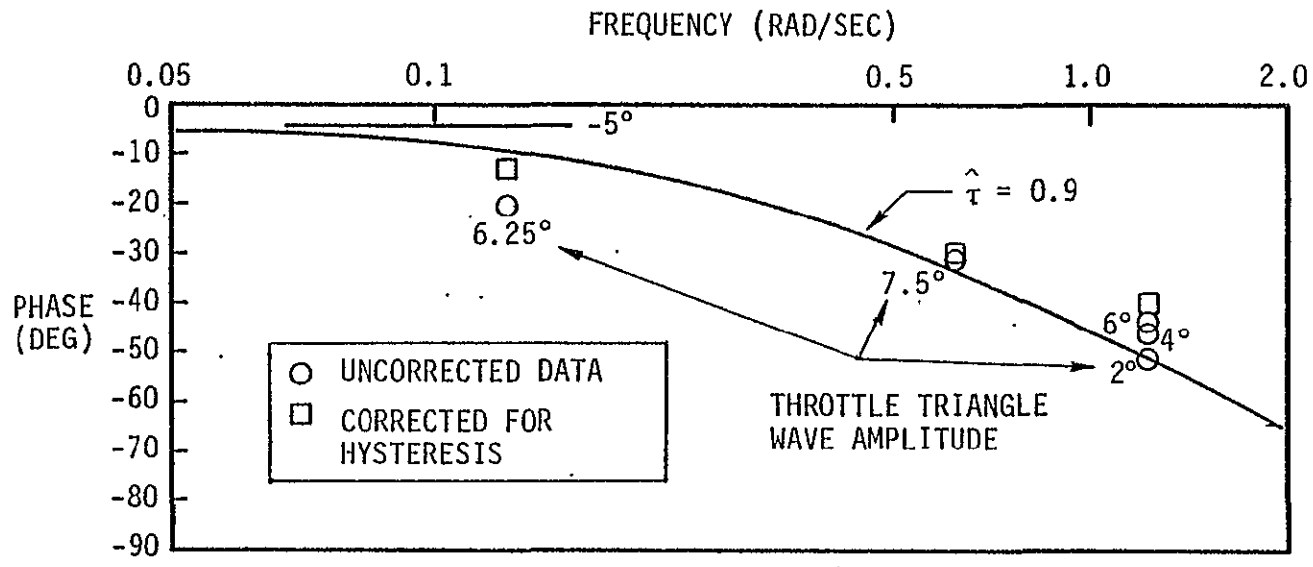

Figure 3.7 Throttle to Rotor Speed Phase Difference (Data Corrected for Linkage Hysteresis) AWJSTOLRA Left Engine, Flight 323/324

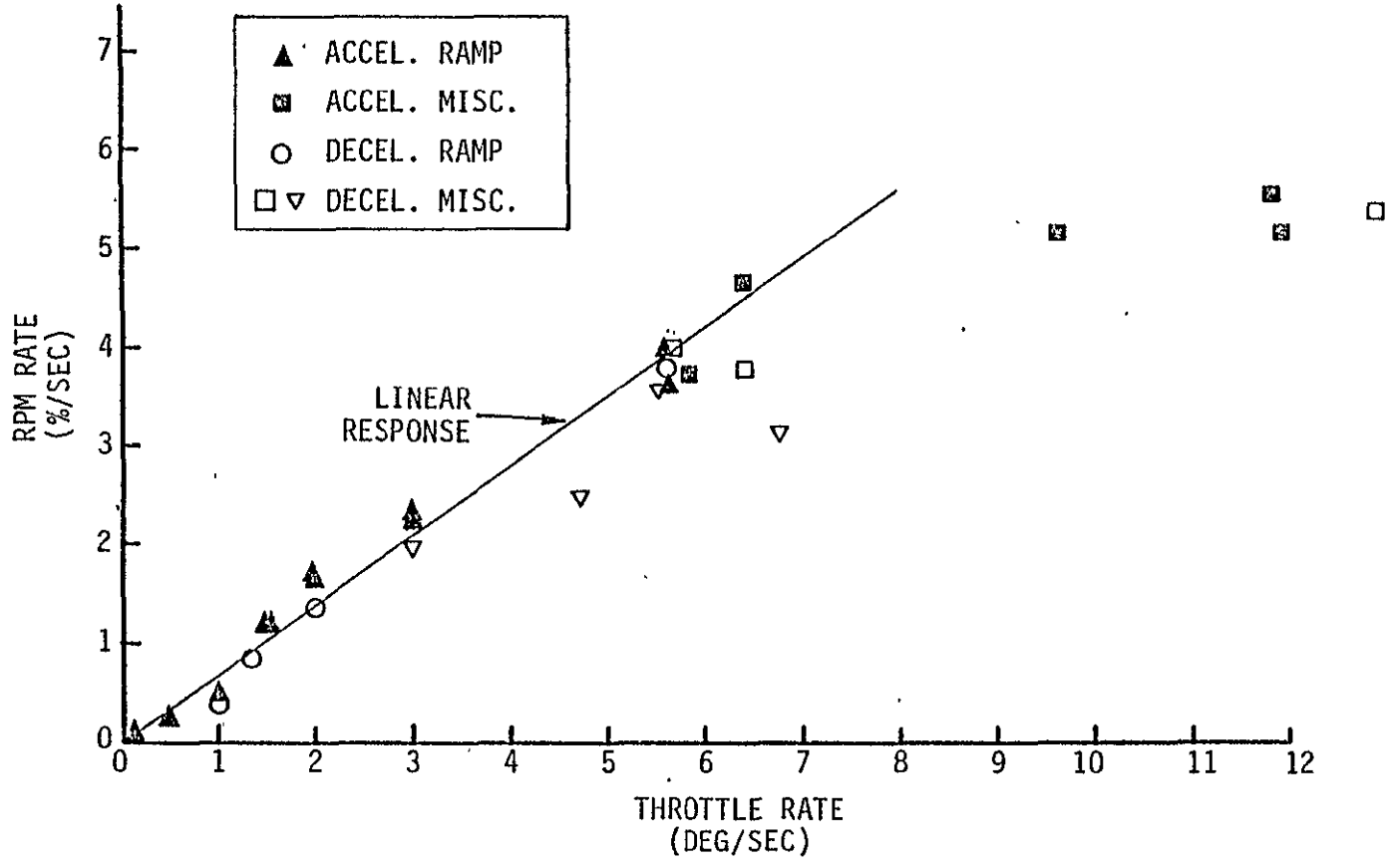

Figure 3.8 Fuel Control Rate Characteristic (AWJSTOLRA Left Engine) Flight 323/324

somewhat slower. For maneuvers during test sequences, the governor does not rate saturate and this effect can not be precisely identified.

3.2.4 Fan and Compressor Dynamics

In the development of the dynamics of the engine in Chapter II, it was noted that the engine rotors have two modes of response, namely, a unison mode and a fan rotor relaxation mode. The magnitude of these time constants can be approximated from the flight data by examining the rotor phase relationship at various frequencies. This phase angle is not dependent on the characteristics of the fuel control. It is assumed that fuel flow primarily enters the compressor speed equation, then the transfer function between the rotor speeds can be written as follows:

$$\frac{N_L}{N_H} = \frac{\tau_H \; s+1}{\tau_L \; s+1}$$

where τ_H and τ_L are the time constants of the two modes. The phase differences were measured at three forcing frequencies and are plotted in Figure 3.9. A function representing the first order phase difference was fit to the data,

$$\phi(N_L) - \phi(N_H) = \tan^{-1}(\tau_H\omega) - \tan^{-1}(\tau_L\omega) \; .$$

A time constant of 1.0 sec was determined for the compressor. This corresponds quite well with the fuel flow to rotor speed phase calculation corrected for hysteresis. The fan speed time constant is predicted to be 2.6 sec. This is a rather large value for typical turbofan configurations without the duct bleed. Since only three points were used, the accuracy figures are unknown and the estimate could be inaccurate.

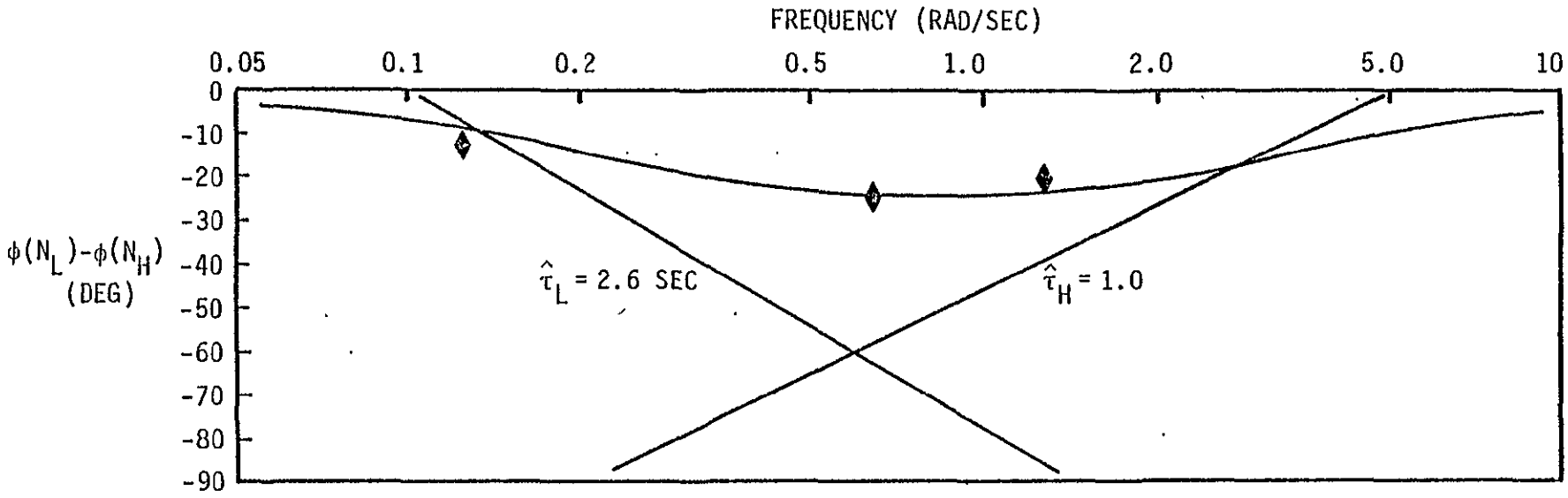

Figure 3.9 Spool Dynamics Identification (from Fan and Compressor Phase Difference) AWJSTOLRA Left Engine - Flight 323/324

3.2.5 Control Parameters

The control model developed for identification has a number of static elements which can be estimated from steady state and dynamic responses of the controlled engine. These calculations are discussed below. The assumption is made that the null position in the speed governor is independent of engine speed. This is nearly true for moderate power changes. In this case, the governor error, ε, can be written from the steady state operating line as follows:

$$N - 0.7212\ \delta_T - 77.28 = -\varepsilon \quad (\%\ \text{RPM})$$

The governor error is zero in steady state; thus, the pressure drop governor must cancel the engine dynamics to form a pure integrator (or rate servo). This implies that the engine fuel to rotor speed gain, c_f, is inversely balanced by the pressure drop regulator characteristic rotor speed to fuel flow (pressure drop) gain. This situation is represented in the model. The value of c_f is determined from the operating line relationship,

$$W_f = 7.13N - 613\%$$

or

$$c_f = 7.13\ (\%\ \text{F.F./\% RPM})$$

The remaining control parameters are the governor forward loop gain and nonlinearity, α. The control law for the engine and pressure drop regulator can be written as follows (neglecting the nonlinearity)

$$\dot{N}_H = K_{AF}\ \Delta\ A_m$$

$$= \frac{C_F K_{AF}}{\tau_H}\ (0.72.2\ \delta_T - N_H - 77.28)$$

The time constant of the closed-loop system is $\tau_{CL} = \tau_H / C_F K_{AF}$ and a reasonable guess of the value for K_{AF} is 1.0 sec^{-1}. The nonlinearity, α, which results in slower accelerations than decelerations is difficult to estimate. A nominal value of zero is chosen for the initial estimation runs.

3.2.6 Summary of Initial Parameter Estimates

The discussion in Section 3.2 has provided the basis for initial parameter estimates for the engine/control model developed in Chapter II. These estimates are summarized in Table 3.5 and identified with the appropriate computer program symbology (see Chapter V for estimation results). Initial estimates for scale factor and instrumentation biases are also included. These were measured directly from the flight data.

Table 3.5
Initial Parameter Estimates

PARAMETER	SYMBOL	INITIAL ESTIMATE	UNITS
Throttle Hysteresis	DLINK1	0.48	Deg
Control Hysteresis	DLINK2	0.19	Deg
Throttle Pickoff Scale Factor	BPOT1	-25	Deg/Counts
Throttle Pickoff Bias	BPOTØ	950	Counts
Throttle/RPM Gain	KTH	0.7212	Deg/% RPM
Area to Fuel Gain	KAF	1.0	Sec^{-1}
Governor Nonlinearity	ALPHA	0.0	$(\% \text{ RPM})^{-1}$
Flowmeter Damping Ratio	ZETA	0.2	---
Flowmeter Natural Frequency	OMN	13	Sec^{-1}
Compressor Lag	CLAG	1.0	Sec
Fan Lag	FLAG	2.6	Sec
Fuel/RPM Gain	CF	7.13	% RPM/% PPH
Fuel to Fan Coupling	CFL	0.0	% RPM/% PPH
Fan Speed Bias	XNLBIS	0	% RPM
Tailpipe Pressure Lag	TLAG	0.0	Sec
Duct Pressure Lag	DLAG	0.0	Sec
Tailpipe Pressure Scale Factor	TGAIN	4.0	%/% RPM
Duct Pressure Scale Factor	DGAIN	1.32	%/% RPM
Tailpipe Pressure Bias	PT6BIS	-300	%
Duct Pressure Bias	PTDBIS	-32	%

PRECEDING PAGE BLANK NOT FILMED

CHAPTER IV
PARAMETER IDENTIFICATION PROGRAM

A program was developed to process the flight acquired data and estimate parameters of the model. The details of the software are presented in this chapter. A program listing is included in Appendix A.

4.1 THEORETICAL BACKGROUND

The Spey engine model developed in Chapter II is used as the foundation of the parameter estimation procedure. This model is shown in Figure 4.1. The model equations can be represented as follows:

$$\dot{x} = f(x, u, \theta) \tag{4.1}$$

$$y_k = h(x_k, u_k, \theta) + v_k \tag{4.2}$$

where the x is the engine state vector, y is the measurement vector, $f(.,.,.)$ and $h(.,.,.)$ are the engine/control dynamic equations and measurement distribution matrix, respectively. Table 4.1 lists the element of the state, output, and control vectors. The measurement noise is assumed to have a Gaussian distribution with known covariance.

The maximum likelihood parameter estimates are obtained by minimizing the log-likelihood function for the parameter estimate given the data. A complete discussion of the theory is given in Ref. 6.

$$J = \min_{\hat{\theta}} \sum_{i=1}^{N} (y(i)-(\hat{y}))^T R^{-1} (y(i)-\hat{y}(i)) \tag{4.3}$$

where $R = \mathrm{diag}(\sigma_1^2, \ldots, \sigma_p^2)$ is the covariance matrix of the independent measurement errors, and

$$\hat{y}(i) = h(\hat{x}(i), u(i), \hat{\theta}) \tag{4.4}$$

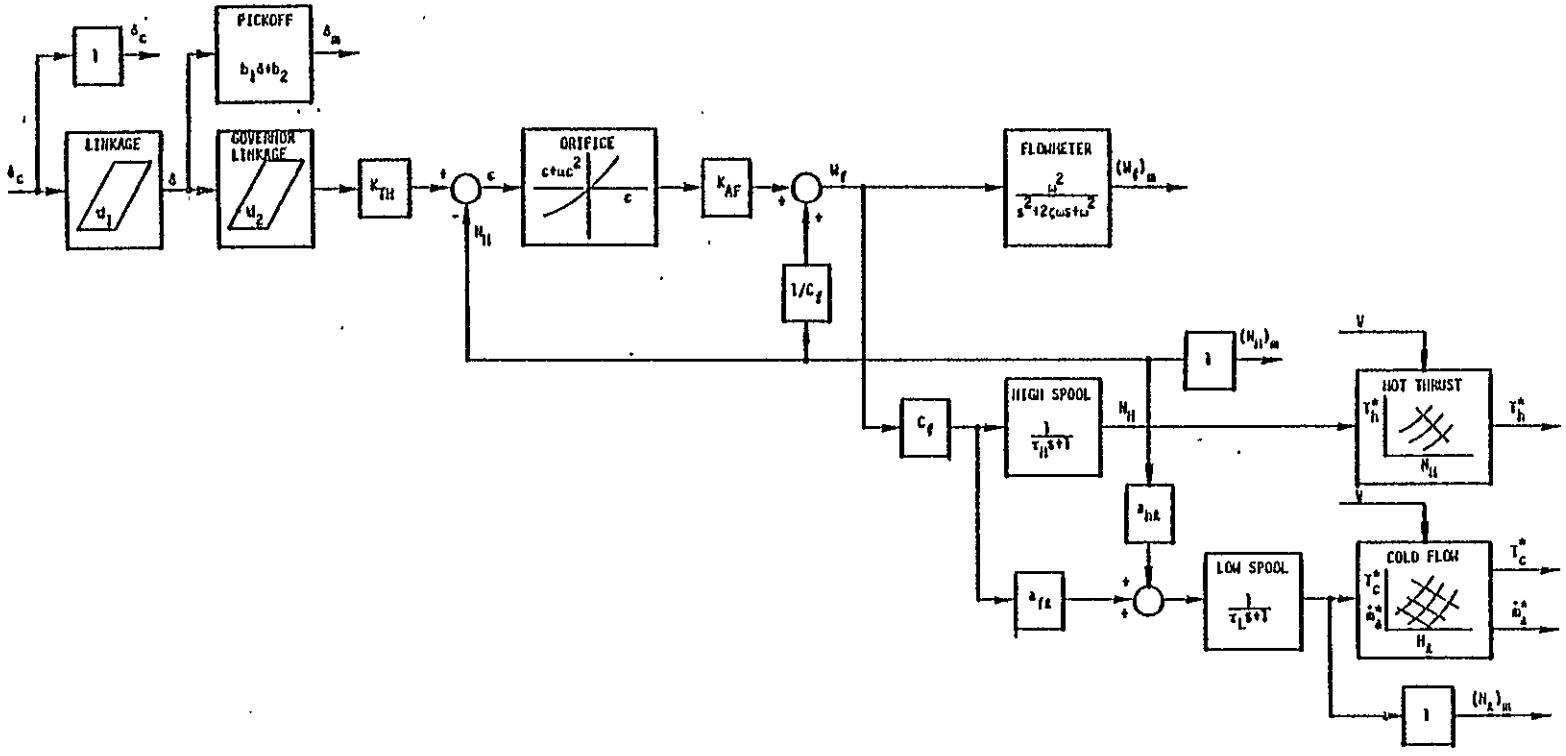

Figure 4.1 Proposed Spey Engine Identification Model

Table 4.1

Engine State, Output and Control Vectors

	SYMBOL
STATE	
High Rotor Speed	XNH
Low Rotor Speed	XNL
Tailpipe Pressure	PT6
Duct Pressure	PTD
CONTROL VECTOR	
Throttle Position	DELTT
MEASUREMENT VECTOR	
Throttle Pickoff	DELTPO
Fuel Flow	WFMSN
High Rotor Speed	XNHMSN
Low Rotor Speed	XNLMSN
Tailpipe Pressure	PT6MSN
Duct Pressure	PTDMSN

subject to the differential constraint

$$\dot{\hat{x}} = f(\hat{x}, u, \hat{\theta}). \tag{4.5}$$

For the Spey engine, Eq. (4.5) is discretized internally in the simulation program to form the discrete constraint equations:

$$\dot{\hat{x}}(i+1) = \phi\hat{x}(i) + \Gamma u(i). \tag{4.6}$$

The minimization in Eq. (4.3) is carried out using either a Quasi-Newton method or Levenberg-Marguart procedure. The Levenberg Marquart algorithm provides a stable search for the minima near a priori estimates. The parameter step for this algorithm is as follows:

$$\theta(i+1) = \theta(i) - \left(\frac{\partial^2 J}{\partial\theta^2} + \lambda I\right)^{-1} \frac{\partial J}{\partial\theta} \tag{4.7}$$

where the expression,

$$\frac{\partial^2 J}{\partial \theta^2},$$

is approximated from gradient calculations and the Marquart parameter, λ, is chosen based on minimization performance during the search. More detail on these algorithms is contained in Ref. 6.

The parameter estimation procedure described produces the maximum likelihood estimates for a given data record assuming the correct model structure and no process disturbances. These assumptions are well satisfied in the engines. The model structure has been carefully studied and initially evaluated to assure a good a priori structure.

An additional identification option is included in the program to facilitate the initial startup of the procedures. Convergence of the maximum likelihood procedure is slowed by poor initial estimates and by improperly excited modes. To improve initial parameter estimates before the full algorithm is run, a partial identification procedure can be used. The program logic allows utilization of measured variables as inputs to model blocks in the simulation. In this way, smaller identification problems can be run to obtain accurate a priori guesses for the full system. As an example, measured fan speed can be used as one input to the duct dynamics. Gain and time constants can be found which then are used as estimates for the full identification. For the full run, the derived fan speed is used as the input and the overall response is estimated.

4.2 STATISTICAL PROPERTIES

The identification algorithm generates an estimation of the statistics of the parameters. These figures may be used to

evaluate the parameter accuracies and combine estimates from different data records to calculate the best overall parameter results. Matrix outputs from the program are discussed below.

The cost function, $J(\theta)$ is calculated from normalized measurement error covariances as follows:

$$J = \sum_{i=1}^{P} \frac{R_o}{R_i} \sum_{j=1}^{N} \varepsilon_i(j)^2 \tag{4.8a}$$

$$\varepsilon_i(j) = y_i(j) - \hat{y}_i(j) \tag{4.8b}$$

where $R_o = \sigma_1^2$.

Thus, the measurement accuracies are weighted with respect to the accuracy of the first instrument. The scaled information matrix is derived from the second derivative of J with respect to the parameters. This matrix is developed during the iterative solution of the minimization problem. The scaled information matrix is defined as follows:

$$H = \frac{\partial^2 J}{\partial \theta^2} \tag{4.9}$$

The eigensystem (eigenvalues and eigenvectors) of H are calculated. The overall conditioning of H and linear combinations of parameters corresponding to small eigenvalues of H are diagnostic tools in evaluating the convergence. An estimate of the parameter accuracies can be determined from the dispersion matrix as follows:

$$D = N^* R_o H^{-1}$$

and (4.10)

$$\mathrm{cov}(\theta\theta^T) \geq D$$

where the matrix D forms the Cramer-Rao bound on the estimates if $N^* = 1$.

The value of N^* is chosen to weight the independence of the data. A good approximation to this value is the ratio of the number of points between uncorrelated residuals, or, if the residual correlation time constant is approximately determined to be τ_{COR}, then N^* can be chosen as follows:

$$N^* = \frac{\tau_{COR}}{TN_{TOT}} \tag{4.11}$$

where T is the sampling interval and N_{TOT} is the total number of data points. Values of N^* are typically chosen between 1 and 20.

The fractional variance is calculated from the unit dispersion matrix (D for $N^* = 1$) . This equation is

$$\hat{\sigma}_{\theta_i} = \sqrt{N^* D_{ii}} / \hat{\theta}_i \tag{4.12}$$

where σ_{θ_i} is the fractional confidence interval on the estimate of the parameter, θ_i.

The F-ratio of the parameter estimate indicates the significance of the parameter to the model. The F-ratio is the inverse of the fractional variance, or,

$$F_{\theta_1} = 1/\hat{\sigma}_{\theta_i}{}^2 \tag{4.13}$$

Finally, the fractional gradient of the likelihood function indicates the "closeness" of convergence of the algorithm. This quantity is defined as follows:

$$G_{\theta_1} = \partial J/J/\partial\theta/\theta \tag{4.14}$$

The quantities listed above are output for each parameter estimated. An example of this output is given in Figure 4.2.

SCALED INFORMATION MATRIX

PARMETER	AL0	AL1	BPOT	BPOT
AL0	.35749386701290E+07			
AL1	.60253817431526E+08	.10627777876374E+10		
BPOT	.24158146034951E+05	.42134677261987E+06	.64597603084903E+04	
BPOT	.60690748803226E+06	.10572979409026E+08	.15310305746570E+06	.36550192076097E+07

EIGENSYSTEM OF INFORMATION MATRIX

EIGENVALUES:
45.9696
158344.
.355574E+07
.106630E+10

EIGENVECTORS:
DECOMPOSITION PERFORMANCE INDEX= .209972

	1	2	3	4
1	.27417935150931E-03	-.99839507818434E+00	-.16039254072298E-02	-.56609417030982E-01
2	.53153839836284E-05	.56590474754757E-01	.10080454654131E-01	-.99834658439476E+00
3	.99912122394718E+00	.36423015366450E-03	-.41910492935338E-01	-.39721090799105E-03
4	-.41913060680691E-01	.21585529974602E-02	-.99906922805136E+00	-.99656186041300E-02

UNIT DISPERSION MATRIX

PARMETER	AL0	AL1	BPOT	BPOT
AL0	.62967353191217E-05			
AL1	-.35673499124507E-06	.21188714136616E-07		
BPOT	.59568473365873E-05	.11553843441793E-06	.21715305431402E-01	

Figure 4.2 Example of Spey Program Output Statistics

ORIGINAL PAGE IS OF POOR QUALITY

FINAL RESULTS OF OPTIMIZATION

QUASI-NEWTON METHOD

PARM NO.	VARIABLE	LOCATION	VALUE
1	AL0	11	.253775
2	AL1	12	.437142E-02
3	BPOT0	14	927.898
4	BPOT1	15	-24.5692

FINAL ROOT MEAN SQUARE RESIDUALS

ERROR NO.	RESIDUAL	LOCATION	VALUE	WEIGHT
1	THRERR	1.	4.01635	1.00000
	AVERAGE RMS ERROR		4.01635	

FINAL STATISTICS

RESIDUAL SUM OF SQUARES	= 52425.9
NORM OF THE GRADIENT	= .692278
NO. OF FUNCT EVALUATIONS	= 112.000
EST NO. OF SIGN. DIGITS	= 7.63067
FINAL MARQUARDT PARAMETER	= 0.
NUMBER OF ITERATIONS	= 0.

NORMAL TERMINATION

Figure 4.2 (Concluded)

ORIGINAL PAGE IS
OF POOR QUALITY

Typically, for identification runs on different data records, the parameter estimates will be different. This is primarily due to the stochastic nature of the inputs. In some situations, accurate values of the parameters may be obtained when an optimum input time history excites the system response in a favorable way. Other data records may contain information about the parameters but not of the same quality as optimum inputs. The results of the parameter estimation runs can be combined to form the optimum estimate for the overall series of data records by weighting the average by the predicted parameter covariance.

The exact formula is given in terms of the information matrices, M_i, for each of q runs:

$$\bar{\theta} = \left[\sum_{i=1}^{q} M_i \right]^{-1} \left[\sum_{i=1}^{q} M_i \, \hat{\theta}_i^{\,i} \right] \tag{4.15}$$

where $M_i = \frac{1}{N_i^*} R_o^{-1} H_i$ and $\hat{\theta}_i^{\,i}$ is the parameter estimate for the ith record. An approximate formula can be used with reasonable accuracy as follows:

$$\bar{\theta}_j = \left[\sum_{i=1}^{q} (D_{jj}^i)^{-1} \right] * \left[\sum_{i=1}^{q} (D_{jj}^i)^{-1} \, \theta_j^{\,i} \right] \tag{4.16}$$

where D_{jj}^i is the jth diagonal element of the i dispersion matrix. The above formula can be used to obtain weighted averages of the parameter values accurately reflecting the overall responses.

CHAPTER V
RESULTS OF PARAMETER IDENTIFICATION

The model developed in Chapter II was used as the foundation of a parameter estimation program. In this way, the code used for identification could be directly transferred to the AWJSTOLRA simulation without reformulation of the modeling equations. The parameter values would be the same as identified from the data.

The identification procedure is described in Chapter IV and a listing of the simulation/identification program is included in Appendix A. Preliminary parameter estimates were graphically calculated from the flight data as described in Chapter III.

The simulation can be used to identify parameters in portions of the engine using measured or derived variables as input. The parameters which are identified can be optionally selected. Table 5.1 shows the parameters of the engine simulation which are available to estimate. Variable name definitions associated with block diagram variables (Figure 5.1) are shown in Table 5.2. The program was sequentially exercised to identify throttle parameters, engine pressure dynamics, engine dynamics, and engine/control dynamics. The identification setup used and the results are presented in the following subsections.

5.1 THROTTLE IDENTIFICATION

The throttle hysteresis value and pickoff bias and scale factor were identified. In addition, a power level dependent hysteresis width was hypothesized and added to the parameter list. Figure 5.2 shows the program set-up. Measured throttle commands are used as input, the throttle pick-off is commanded

 PRECEDING PAGE BLANK NOT FILMED

Table 5.1

ORIGINAL PAGE IS
OF POOR QUALITY

SPEY ENGINE SIMULATION PARAMETERS
AWJSTOL RESEARCH AIRCRAFT
SYSTEMS CONTROL, INC (VT)
1801 PAGE MILL ROAD
PALO ALTO, CALIFORNIA

```
*********************
*                   *
*  RIGHT ENGINE     *
*  FLIGHT NUMBER 324*
*  RUN NUMBER  5    *
*  ST:        56000 *
*********************
```

THROTTLE		CONTROL		ENGINE		DUCT/EXHAUST	
DLINK1=	.329645	KTH =	.762446	CLAG =	.210000	TLAG =	.500000E-02
DLINK2=	.100000E-01	KAF =	5.04400	FLAG =	.403000	TGAIN =	4.72200
AL0 =	.253775	ALPHA =	0.	CF =	.110000	PT6BIS=	-1.94100
AL1 =	.437142E-02	CFCNTR=	.110000	AFL =	.710000	DLAG =	.500000E-02
AL2 =	0.	EPSBIS=	.435724	CHL =	3.07300	DGAIN =	1.13500
BPOT0 =	927.898	KFSF =	1.00000	XNLBIS=	.324000	PTDBIS=	-3.93000
BPOT1 =	-24.5692	KFBIAS=	20.9200	CLAGD =	.909156	TLAGD =	.183156E-01
ZETA =	.990000	OM =	50.0000	CLAGG =	.908436E-01	TLAGG =	.981684
OM =	50.0000	SIG =	-.202020E-01	FLAGD =	.951584	DLAGD =	.183156E-01
KA1 =	0.	KA2 =	0.	FLAGG =	.484165E-01	DLAGG =	.981684

FULL POWER POINT		
THROTTLE POSITION =	31.50	DEGREES
THROTTLE PICKOFF =	976.0	COUNTS
MAIN FUEL FLOW =	5750.	LBM/HOUR
COMPRESSOR SPEED =	.1335E+05	REV/MIN
FAN SPEED =	.1008E+05	REV/MIN
AUGMENTOR PRESSURE=	50.00	LBF/SQIN
DUCT PRESSURE =	50.00	LBF/SQIN

OPTIMIZATION PARAMETERS	
NO.OF MEASUREMENTS =	6
NO.OF PARAMETERS =	4
NO.OF ERROR TERMS =	1
NO.OF DATA POINTS =	3250
NO.OF FIRST POINT =	1
NO.OF INCREMENT =	1
DATA PRINT INTERVAL=	0
CONSTANT PRINT FLAG=	0
EPSILON =	.10000E-03
DELTA =	.10000E-03
MAX FUNCTION EVALS =	300
NO.OF SIGNIF DIGITS=	4

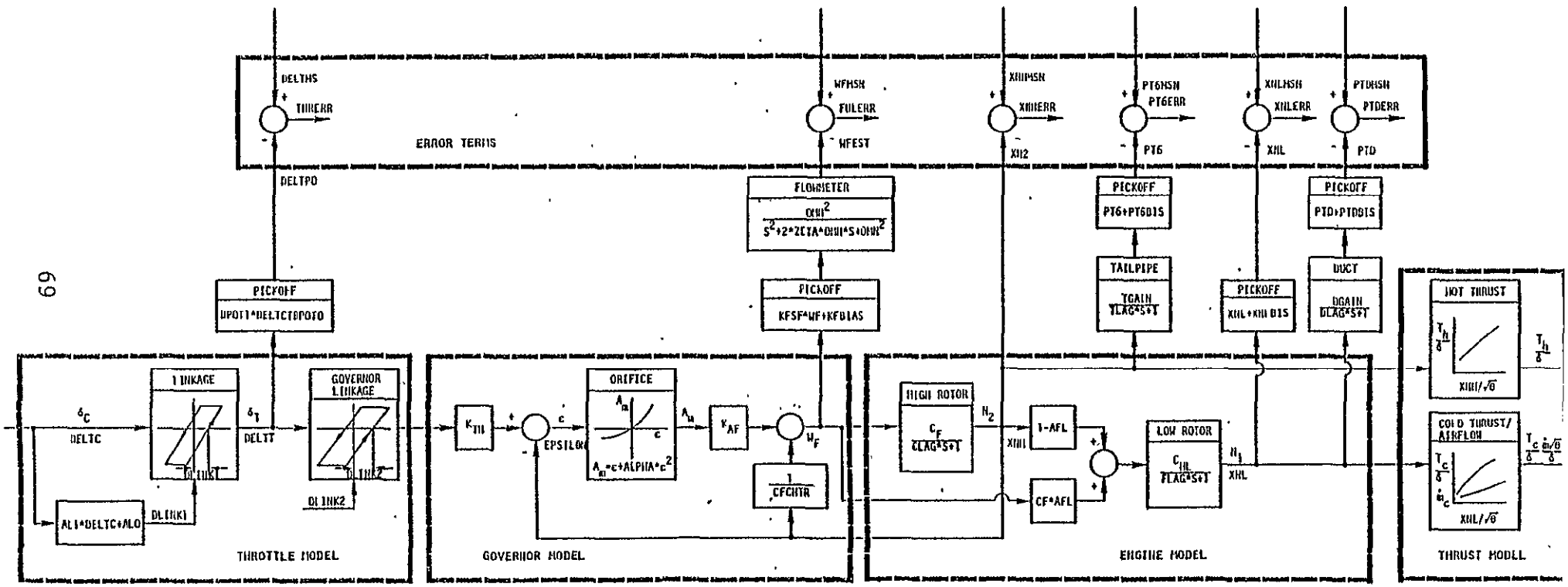

Figure 5.1 Proposed Spey Engine Identification Model Showing Program Symbology

Table 5.2

Spey Parameter Index

PARAMETER INDEX	SYMBOL	NAME
11	AL0	Constant throttle hysteresis
12	AL1	Linear throttle hysteresis
13	AL2	Quadratic throttle hysteresis
14	BPOTØ	Throttle pickoff bias
15	BPOT1	Throttle pickoff scale factor
16	DLINK2	Internal control hysteresis
17	KTH	Throttle to RPM transfer factor
18	ALPHA	Throttle nonlinearity constant
19	KAF	Area to fuel gain
20	CFCNTR	Pressure drop governor feedback
21	ZETA	Fuel flowmeter damping ratio
23	OMN	Fuel flowmeter natural frequency
26	CLAG	Compressor speed time constant
29	CF	Fuel to RPM gain
30	AFL	Fuel to low rotor speed gain
31	CHL	High rotor to low rotor gain
32	FLAG	Fan speed time constant
35	TLAG	Tail pipe pressure time constant
38	TGAIN	Tail pipe pressure to RPM gain
39	DLAG	Duct pressure lag
42	DGAIN	Duct pressure to RPM gain
43	KA1	Flowmeter estimator gain
44	KA2	Flowmeter estimator gain
46	EPSBIS	Throttle bias
47	KFSF	Flowmeter scale factor
48	KFBIAS	Flowmeter bias
50	PTDBIS	Duct pressure bias
51	PT6BIS	Tail pipe pressure bias
52	XNLBIS	Fan speed pressure bias

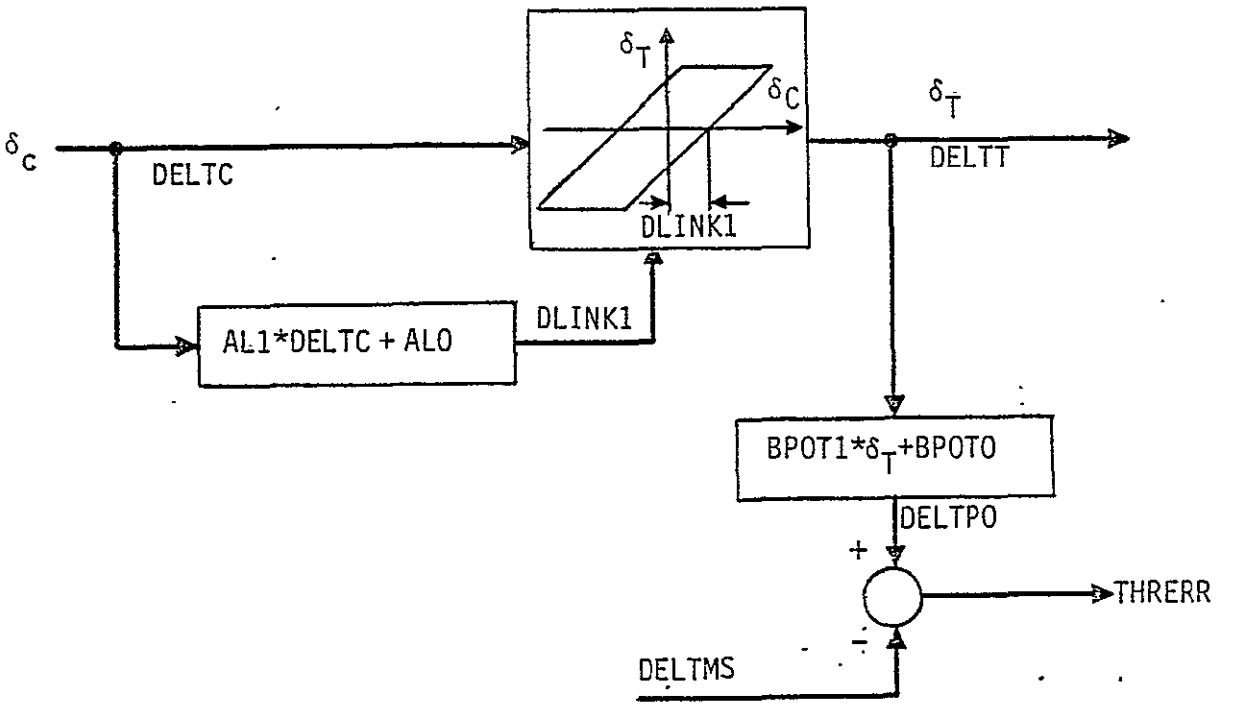

Figure 5.2 Setup for Throttle Hysteresis Identification

with the derived pick-off signal and parameters adjusted to maximize the fit. Program convergence was quite consistent on a run-to-run basis. The fit results for two runs are shown in Table 5.3. An examination of the fit errors indicate that the right engine modeling accuracy is significantly poorer than the left engine. The data shows a large amount of noise on both the throttle command and pick-off signal relative to the left engine. This noise is averaged by the identification procedure and does not significantly affect the accuracy of the resulting parameter estimates. Table 5.4 shows that the power

Table 5.3
Throttle Input Fits

RUN	RECORD	NO. OF POINTS	RMS THRERR LEFT (COUNTS)	RMS THRERR RIGHT (COUNTS)
1	1	6000	1.67	6.10
2	5	3250	1.49	3.02

level dependent hysteresis width is not a significant parameter in the model. This may be inferred by the small F-ratio and large fractional standard deviation. Table 5.5 shows the average values of the final model for the throttle hysteresis and pick-off.

5.2 IDENTIFICATION OF PRESSURE DYNAMICS

The tailpipe and duct dynamics were modeled as pressure lags. It was expected that exhaust pressure lag would be insignificant. The duct lag was more uncertain. An attempt was made to identify the terms in a linear model of the flow as shown in Figure 5.3. The rotor speed measurements are used as input quantities. The error term is calculated from the measured and derived pressure. The terms modeled are the time lag, flow gain, and bias. Sensor scale factors are lumped with the flow gain. Input and output sensor biases are combined in the bias term. The flow lag and any sensor response lags are modeled in the time constant term. Typical transient pressure sensor response times are less than 10 msec and the rotor speed lag is less than this. Any identified lag should be associated with the flow dynamics in the exit volume.

Table 5.4

Parameter Estimation Results for Throttle Hysteresis Using Flight Data of Records 1 and 5

	PARM NO.	VARIABLE	VALUE	FRACT.STD.DEV.	F RATIO	FRACT.SENSIT.
			LEFT ENGINE			
1	1	AL0	.251611	.249650E-01	1604.49	.246865E-05
	2	AL1	-.142219E-03	-2.20025	.206565	-.146542E-07
	3	BPOT0	976.887	.172528E-03	.335955E+08	-.135067E-03
	4	BPOT1	-26.2088	-.271343E-03	.135819E+08	.753474E-04
	PARM NO.	VARIABLE	VALUE	FRACT.STD.DEV.	F RATIO	FRACT.SENSIT.
5	1	AL0	.253676	.142865	48.9945	-.784314E-05
	2	AL1	.199695E-03	10.4189	.921210E-02	-.173583E-06
	3	BPOT0	986.654	.173938E-03	.330532E+08	-.288680E-03
	4	BPOT1	-26.3713	-.285379E-03	.122788E+08	.223072E-03
			RIGHT ENGINE			
	PARM NO.	VARIABLE	VALUE	FRACT.STD.DEV.	F RATIO	FRACT.SENSIT.
1	1	AL0	.250647	.163424	37.4430	.111249E-05
	2	AL1	.159342E-02	1.26673	.623203	.547557E-07
	3	BPOT0	936.661	.156515E-03	.408216E+08	-.415084E-03
	4	BPOT1	-24.9108	-.243866E-03	.168150E+08	.267171E-03
	PARM NO.	VARIABLE	VALUE	FRACT.STD.DEV.	F RATIO	FRACT.SENSIT.
5	1	AL0	.253775	.988802E-02	10227.8	-.184403E-06
	2	AL1	.437142E-02	.332989E-01	901.864	-.575788E-07
	3	BPOT0	927.898	.158812E-03	.396492E+08	.226552E-04
	4	BPOT1	-24.5692	-.252530E-03	.156810E+08	-.145151E-04

Table 5.5

Combined Throttle Estimates

	RUN 1 EST/FSD (%)*	RUN 2 EST/FSD (%)*	AVERAGE EST	UNITS
LEFT				
ALO	0.252/2.5	0.254/14	0.252	Deg
BPOTO	977/.17	987/.17	982	Counts
BPOT1	-26.2/.27	-26.4/.29	-26.3	Counts/Deg
RIGHT				
ALO	0.251/16	0.254/1.0	0.254	Deg
BPOTO	937/.16	928/.16	942	Counts
BPOT1	-24.9/.24	-24.6/.25	-24.75	Counts/Deg

* EST/FSD = Estimate/Fract. Std. Dev.

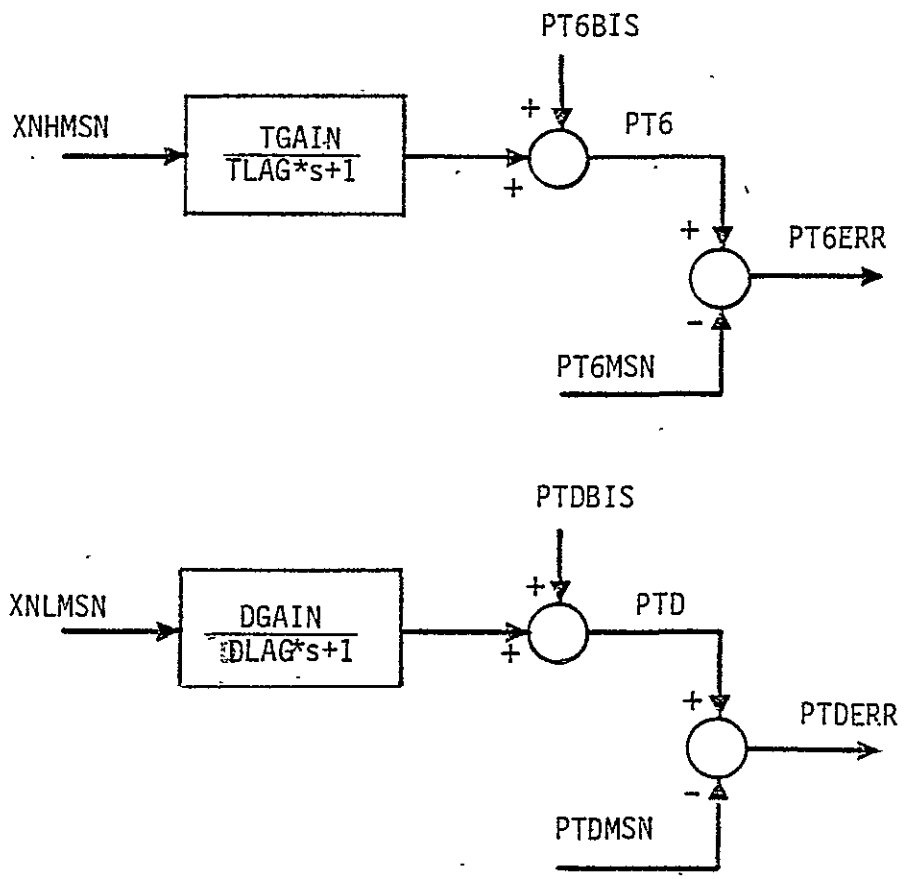

Figure 5.3 Equation Error Identification of Pressure Dynamics

An estimation run on record one was made. Results are presented in Table 5.6. The fits are shown in Appendix C. It is apparent that the linear model of the pressure is not completely satisfactory in measuring large pressure responses. This is probably due to a combination of sensor and pressure response nonlinearity. The estimated pressure gains and bias are best fits to the particular data record. The exhaust lag is identified as zero reenforcing the intuitive conclusion. The duct lag time constant is 0.049 sec. This figure represents an insignificant value relative to the engine dynamics. It is consistent with the lumped volume time constant of the flow.

5.3 IDENTIFICATION OF ENGINE PARAMETERS

The parameters determining the dynamic response of the engine to fuel flow inputs were identified. The program setup is shown in Figure 5.4. The measured fuel flow is the input used. Error signals are derived from rotor speed measurements and pressure measurements. Pressure gains and scale factors are introduced as free parameters in addition to the linear model engine equations. Data records representing triangle wave and doublet inputs were used.

Table 5.7 lists the fit errors for identification of left and right engine parameters for the three sets of data. Representative time history matches are included in Appendix C. The results of the estimation runs are shown in Tables 5.8 and 5.9 for the left and right engines, respectively. In general, the engine variables are accurately and consistently estimated. Intermediate values such as pressure gains and bias are not as consistent. These terms have been more accurately identified in setup in Section 5.2. The inconsistencies arise because of a nearly unidentifiable combination of bias and scale factor on the instruments and pressure response nonlinearity. This does not affect the accuracy of the engine variables.

Table 5.6

Identification of Pressure Dynamics
(Record No. 1, 6000 Data Points)

PARAMETER	LEFT ENGINE		RIGHT ENGINE		UNITS
	PARAMETER	FRACT. STD. DEV.	PARAMETER	FRACT. STD. DEV.	
TLAG	0.0*	---	0.0*	---	Sec
TGAIN	4.10	0.008	4.35	0.03	% PRESS/% RPM
DLAG	0.05	---**	0.05	---**	Sec
DGAIN	1.36	0.003	1.40	0.07	% PRESS/% RPM
PTDBIS	-3.02	0.01	-3.53	0.26	% PRESS
PT6BIS	-5.41	0.03	-1.82	0.40	% PRESS

* Not identifiable.
** Estimate not reliable because of large sampling period relative to lag.

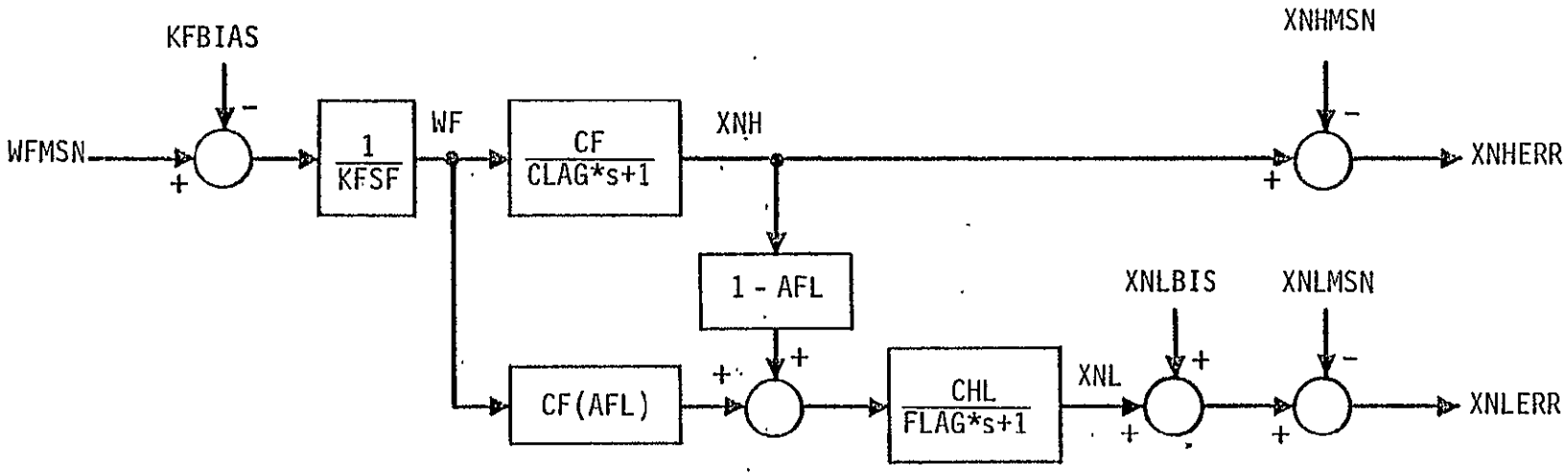

Figure 5.4 Engine Parameter Identification

Table 5.7

Fit Errors for Engine Parameter Identification Runs

LEFT ENGINE				
DATA RECORD	ERROR NO.	RESIDUAL	LOCATION	AVERAGE ERROR% VALUE
1	1	XHSERR	3	.148043
	2	XLSERR	4	.192332
	3	PT6ERR	5	.376965
	4	PTDERR	6	.456491
	ERROR NO.	RESIDUAL	LOCATION	VALUE
3	1	XHSERR	3	.260625
	2	XLSERR	4	.276202
	3	PT6ERR	5	.281031
	4	PTDERR	6	.331822
	ERROR NO.	RESIDUAL	LOCATION	VALUE
7	1	XHSERR	3	.369610
	2	XLSERR	4	.565856
	3	PT6ERR	5	.417991
	4	PTDERR	6	.791495

RIGHT ENGINE				
DATA RECORD	ERROR NO.	RESIDUAL	LOCATION	AVERAGE ERROR % VALUE
1	1	XHSERR	3	.121402
	2	XLSERR	4	.991445E-01
	3	PT6ERR	5	.258342
	4	PTDERR	6	.282912
	ERROR NO.	RESIDUAL	LOCATION	VALUE
3	1	XHSERR	3	1.74624
	2	XLSERR	4	1.73914
	3	PT6ERR	5	.291593
	4	PTDERR	6	.311548
	ERROR NO.	RESIDUAL	LOCATION	VALUE
7	1	XHSERR	3	.265544
	2	XLSERR	4	.364427
	3	PT6ERR	5	.279910
	4	PTDERR	6	.467315

ORIGINAL PAGE IS
OF POOR QUALITY

Table 5.8

Engine Parameter Identification Results
for the Left Engine

DATA RECORD 1			3000 POINTS		60 SECONDS
PARM NO.	VARIABLE	VALUE	FRACT.STD.DEV.	F RATIO	FRACT.SENSIT.
1	CLAG	.245528	.183116E-01	2982.27	-.266902E-02
2	CF	.112700	.223725E-02	199789.	-.963444
3	AFL	.606423	.651741E-01	235.423	-.805331E-02
4	CHL	2.70506	.112671E-01	7877.25	-.927046
5	FLAG	.395805	.828014E-02	14585.6	.344291
6	TGAIN	4.91153	.360138E-02	77101.5	.273931
7	DGAIN	1.47099	.142866E-01	4899.40	-.515400
8	KFBIAS	23.6544	.394499E-02	64255.2	-.538333
9	PTDBIS	-3.19989	-.540682E-01	342.070	-.126345
10	PT6BIS	-1.75263	-.533703E-01	351.075	-.245195E-02
11	XNLBIS	.273644	.214437E-01	2174.70	.427091

DATA RECORD 3			3000 POINTS		60 SECONDS
PARM NO.	VARIABLE	VALUE	FRACT.STD.DEV.	F RATIO	FRACT.SENSIT.
1	CLAG	.209854	.127346E-01	6166.33	.104873
2	CF	.110279	.345332E-02	83854.3	.543096
3	AFL	.709761	.834593E-01	143.566	.763838E-01
4	CHL	3.07253	.668112E-02	22402.8	-.750232
5	FLAG	.403171	.348250E-01	824.553	.359266
6	TGAIN	4.72230	.326436E-02	93843.4	2.04080
7	DGAIN	1.13533	.644158E-02	24099.9	-.152601
8	KFBIAS	20.9181	.722847E-02	19138.5	.260554
9	PTDBIS	-3.93060	-.160548E-01	3879.62	-.216992
10	PT6BIS	-1.94100	-.376977E-01	703.671	.113070
11	XNLBIS	.324064	.231113E-01	1872.20	.550566

DATA RECORD 7			2000 POINTS		40 SECONDS
PARM NO.	VARIABLE	VALUE	FRACT.STD.DEV.	F RATIO	FRACT.SENSIT.
1	CLAG	.280539	.174310E-01	3291.23	-.711820E-01
2	CF	.132310	.507232E-02	38867.5	-19.0540
3	AFL	.648202	.474450E-01	444.241	.337841E-01
4	CHL	3.55974	.301222E-02	110212.	-6.65612
5	FLAG	.471682	.550659E-02	32978.8	2.23619
6	TGAIN	4.03730	.637339E-02	24618.4	-10.9313
7	DGAIN	1.33361	.781848E-02	16358.9	-2.90139
8	KFBIAS	11.1947	.305445E-01	1071.85	-3.43942
9	PTDBIS	-4.58556	-.427352E-01	547.555	-.466905
10	PT6BIS	-8.53689	-.237655E-01	1770.55	-3.09991
11	XNLBIS	.387623	.329964E-02	91847.5	2.25761

Table 5.9

Engine Parameter Identification Results
for the Right Engine

DATA RECORD 1			3000 POINTS		60 SECONDS
PARM NO.	VARIABLE	VALUE	FRACT.STD.DEV.	F RATIO	FRACT.SENSIT.
1	CLAG	.309677	.269890E-01	1372.86	.497044E-01
2	CF	.112470	.351239E-02	81057.9	3.72087
3	AFL	.409645	.500694E-01	398.892	-.390389E-01
4	CHL	2.61253	.880933E-02	12885.9	5.46837
5	FLAG	.363951	.115059E-01	7553.68	-1.96815
6	TGAIN	5.17007	.399868E-02	62541.2	-1.95474
7	DGAIN	1.64253	.156479E-01	4084.03	2.17827
8	KFBIAS	24.6401	.659776E-02	22972.4	1.61175
9	PTDBIS	-2.59336	-.846524E-01	139.547	.366318
10	PT6BIS	1.96712	.562253E-01	316.327	.141740
11	XNLBIS	.302576	.105661E-01	8957.20	-1.96169

DATA RECORD 3			3000 POINTS		60 SECONDS
PARM NO.	VARIABLE	VALUE	FRACT.STD.DEV.	F RATIO	FRACT.SENSIT.
1	CLAG	.319747	.249485E-01	1606.61	-.123973E-03
2	CF	.119920	.338874E-02	87081.0	-.694889E-01
3	AFL	.701278	.677632E-01	217.777	.190973E-03
4	CHL	3.15778	.441653E-02	51266.9	-.111738E-01
5	FLAG	.478460	.680962E-02	21565.3	.120563E-01
6	TGAIN	4.81038	.344225E-02	84394.9	-.321819E-01
7	DGAIN	1.30134	.938184E-02	11361.2	-.842488E-02
8	KFBIAS	18.7169	.867245E-02	13295.9	-.177729E-01
9	PTDBIS	-10.0272	-.124537E-01	6447.71	-.329149E-02
10	PT6BIS	-2.72262	-.400297E-01	624.074	-.413596E-02
11	XNLBIS	.375867	.261079E-02	146709.	.174602E-01

DATA RECORD 7			2000 POINTS		40 SECONDS
PARM NO.	VARIABLE	VALUE	FRACT.STD.DEV.	F RATIO	FRACT.SENSIT
1	CLAG	.308398	.191228E-01	2734.62	.119934E-0
2	CF	.155032	.884564E-02	12780.3	-.633109E-0
3	AFL	-.161548	-.273005	13.4171	.455659E-0
4	CHL	2.91548	.963915E-02	10762.7	.202993
5	FLAG	.249392	.390653E-01	655.267	-.596218E-0
6	TGAIN	3.40194	.968594E-02	10659.0	-.487642
7	DGAIN	1.12496	.977269E-02	10470.6	.998872E-0
8	KFBIAS	3.60752	.130659	58.5766	-.523410E-0
9	PTDBIS	-6.04426	-.331455E-01	910.227	.276840E-0
10	PT6BIS	-10.7760	-.241091E-01	1720.43	-.226384
11	XNLBIS	.379122	.588912E-02	28833.7	.406596E-0

Table 5.10 shows the results averaged by the estimated variances. Accurate estimates of rotor time constants and coupling were obtained from the data processing. The engine-to-engine variation in parameters is less than 10% except for the compressor time constant. The data indicates that the right engine time constant is 35% larger than the left engine. Compressor and turbine build differences, seal leakage, bleed differences, deterioration, etc., are possible reasons for this type of variation. It should be observed that the fan and compressor response roots differ by about 50%. Modeling engine transients with a single time constant can lead to erroneous results as described in Chapter II.

5.4 IDENTIFICATION OF CONTROL PARAMETERS

There are three parameters in the Spey which determine the characteristics of the hydromechanical speed governor as modeled in the simulation. The setup for identification is shown in Figure 5.5. The assumptions made in the analysis of the governor produce this simple form. The results of the parameter estimation will verify these assumptions.

The assumption that the positive feedback from the pressure drop governor just cancels the natural engine damping is an important simplification in the simulation. The rationale is briefly reviewed below. The transfer function from fuel to speed is a first order lag. If it is assumed that the pressure drop governor provides positive feedback with gain C_F', then the metering area to RPM transfer function is as follows:

$$\frac{\delta N_H}{A_m} = K_{AF} \frac{C_F}{1 - C_F/C_F'} \frac{1}{\tau_{PD} s + 1}$$

where

$$\tau_{PD} = \frac{\tau_H}{1 - C_F/C_F'}$$

Table 5.10

Parameter Estimates for Engines

PARAMETER	LEFT ENGINE								RIGHT ENGINE								
	RUN 1		RUN 2		RUN 3				RUN 1		RUN 2		RUN 3				
	θ	r	θ	r	θ	r	$\bar{\theta}$	$\bar{r}$	θ	r	θ	r	θ	r	$\bar{\theta}$	$\bar{r}$	
CLAG	.246	.018	.210	.013	.281	.017	.232	.016	.310	.027	.320	.025	.308	.019	.312	.024	Sec
CF	.113	.002	.110	.003	.133	.005	.114	.003	.112	.004	.119	.003	.155	.009	.118	.005	% RPM/% FF
AFL	.606	.065	.710	.083	.648	.047	.643	.065	.410	.05	.701	.068	(-.16)	(.27)*	0.56	.06	---
CHL	2.71	.011	3.07	.007	3.56	.003	3.39	.007	2.61	.009	3.16	.004	2.92	.010	3.02	.008	---
FLAG	.396	.008	.403	.035	.472	.006	.437	.016	.364	.012	.478	.007	.249	.039	.423	.019	Sec
XNLBIS	.274	.021	.324	.023	.388	.003	.382	.016	.303	.011	.376	.003	.379	.006	.370	.007	% RPM

*Not used in average

θ = Parameter estimates
r = Functional standard deviation

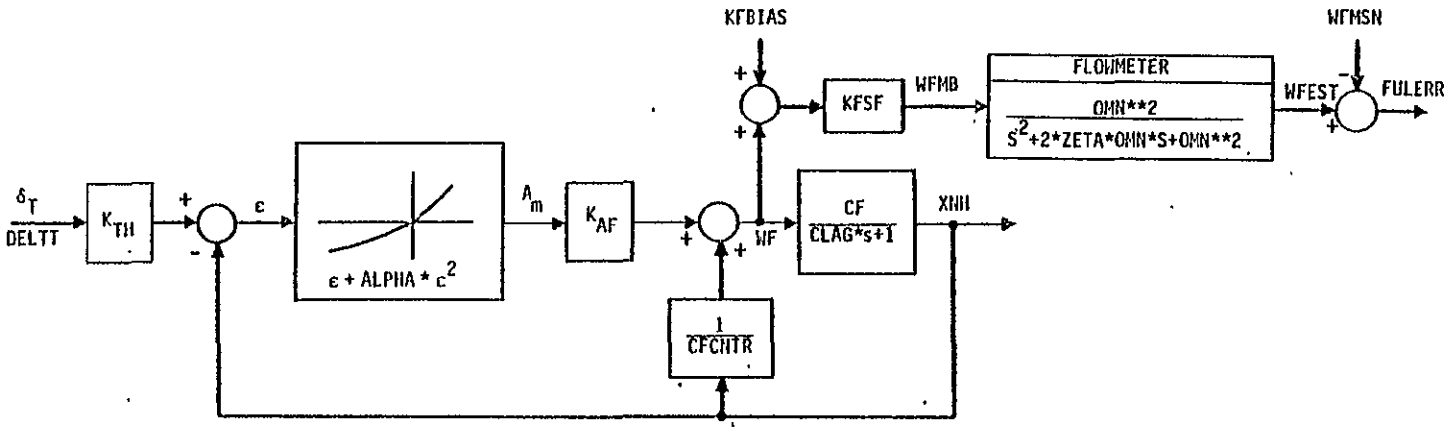

Figure 5.5 Simulation Setup for Control Parameter Identification

Clearly, when $C_F = C_F'$, the pressure drop governor has caused the engine to behave like a rate servo. The speed governor has a control as follows (assume a linear metering characteristic):

$$\delta A_m = K_{TH}\,\delta_T - \delta N_H$$

and the closed-loop transfer function can be written as follows:

$$\frac{\delta N_H}{\delta_T} = K_{TH}\mu \frac{1}{\frac{\tau_H \mu}{K_{AF}C_F} s + 1}$$

where

$$\mu = 1 + \left(\frac{1 - C_F/C_F'}{K_{AF}C_F}\right)^{-1}$$

which indicates that the parameter C_F' is difficult to identify since K_{TH} proportionally determines the d.c. gain and K_{AF} proportionally determines the closed-loop time constant. The "identifiability" of C_F' decreases as μ approaches 1. There is a good justifition that μ is <u>designed</u> to be nearly 1. This can be seen from the metering area d.c. gain as follows:

$$\delta A_m = \frac{1 - C_F/C_F'}{1 - C_F/C_F' + K_{AF}C_F}\,\delta_T \qquad \text{(d.c.)}$$

It is desirable to hold the metering area at null since the acceleration limits are determined by physically limiting δA_m. Null d.c. δA_m is held if $C_F = C_F'$. This assumption is made in the simulation. Mismatches in those two values cause the estimated value of K_{AF} to be slightly biased, but this effect should be second order since $\mu \approx 1$.

Using this assumption, K_{AF} is identified with the closed-loop response determination and K_{TH} with the operating (static) behavior. The values of K_{TH} are accurately determined by steady ground trim runs and verification at selected in-flight points. This value is not estimated.

The results of the estimation for the parameter, K_{AF}, are shown in Table 5.11 for two data records. Appendix C contains sample plots of the time history match to the predicted fuel flow. The loop time constant, $(\tau_H)_{CL}$, is calculated in the table. These values are reasonably close to those obtained from the graphical analysis.

5.5 SUMMARY

Component blocks of the Spey engine simulation have been used to estimate parameters from the flight data. Accuracy values have been calculated for each configuration. Several runs have been used to generate each set of results. In general, the run-to-run consistency has been excellent. Table 5.12 lists the final parameter estimates for each engine and the uncertainty limits associated with these estimates. The confidence interval suggested for the parameters is calculated using the fractional standard deviation and a subjective estimate of the overall fit of the data estimation. Worst case values may lie with an interval two or three times larger than the suggested bounds.

Table 5.11a

Identification Results for Engine Control, KAF and $(\tau_H)_{CL}$ Parameters

RUN	RECORD	NO. OF POINTS	ENGINE	KAF	FRACT. STD. DEV.
1	1	3000	Left	3.44	.007
2	1	6000	Left	2.76	.008
3	7	2000	Left	3.08	.012
4	3	3000	Right	1.60	.007
5	7	2000	Right	3.07	.002

Table 5.11b

Averaged Values

	KAF (% AREA/% RPM)	$(\tau_H)_{CL}$ (SEC)
LEFT	3.11	0.65
RIGHT	2.96	0.89

Table 5.12

Final Spey Engine Parameter Estimates

PARAMETER	INDEX	LEFT ENGINE		RIGHT ENGINE	
		ESTIMATE	UNCERTAINTY	ESTIMATE	UNCERTAINTY
ALØ	11	0.252	±0.062	0.254	±0.060
AL1	12	a/	a/	a/	a/
BPOTØ	14	982	±5.0	942	±5.0
BPOT1	15	-26.3	±0.22	-24.8	±0.18
DLINK2	16	a/	a/	a/	a/
KTH	17	0.7212 d/	---	0.7212 d/	---
ALPHA	18	0 e/	---	0 e/	---
KAF	19	3.11	±0.07	2.96	0.07
CF	20	0.114 c/	±0.001	0.118 c/	±0.002
ZETA	21	0.2 b/	±0.2 b/	0.2	±0.2
OMN	23	13 b/	±3 b/	13 b/	±3 b/
CLAG	26	0.232	±0.011	0.312	±0.022
CFCNTR	29	0.114	±0.001	0.118	±0.002
AFL	30	0.64	±0.13	0.56	±0.10
CHL	31	3.39	±0.07	3.02	±0.07
FLAG	32	0.437	±0.02	0.423	±0.02
TLAG	35	0	±0.001	0	±0.001
TGAIN	38	4.10	±0.10	4.35	±0.40
DLAG	39	0.05	---	0.05	---
DGAIN	42	1.36	±0.01	1.40	±0.3
KFSF	47	1.0 e/	---	1.0 e/	---
KFBIAS	48	0.0 e/	---	0.0 e/	---
PTDBIS	50	-3.02	±0.09	-3.53	±2.75
PT6BIS	51	-5.41	±0.5	-1.82	±2.18
XNLBIS	52	0.382	±0.03	0.370	±0.03
$(\tau_H)_{CL}$ (sec)	---	0.65	±0.05	0.89	±0.05

a/ Not significant

b/ Estimate from inspection of data

c/ Defined as equal to CF - See Chapter II

d/ Derived from steady-state operating line

e/ No significant estimate derived from data

CHAPTER VI
SUMMARY AND CONCLUSIONS

6.1 SUMMARY

The Spey engines on the AWJSTOL research aircraft represent a complex system of coupled dynamics. Flight data was acquired during controlled throttle tests in the powered lift approach configuration of the aircraft. A dynamical model of the throttle linkage, control system, engines, and duct was developed from an analysis of the physical configuration of the engine. The flight data was utilized to develop initial estimates of parameter values using classical frequency response and describing function techniques. A system identification program was used to process the flight and calculate estimates of the parameter value in the engine model. The resulting engine simulation should provide an accurate component representation for inclusion in the AWJSTOLR aircraft simulator.

6.2 CONCLUSIONS

The quality of the flight data provided was excellent. Inputs controlled by the avionics computer were exceptionally repeatable and accuracies associated with parameters were quite good for this reason. The data processing was nearly routine with the identification and run-to-run repeatability of the parameter estimates was good.

The results indicate that the engine is represented, for outer loop simulation and control evaluation, as a second order system. Thrust outputs <u>must</u> be scheduled on fan and compressor speeds separated to model the forces generated by the engines. The model developed is accurate above about 18° throttle angle.

PRECEDING PAGE BLANK NOT FILMED

The behavior of the engine and control, aside from the hysteresis, is quite linear. An insignificant asymmetry in the acceleration and rates was found for these power levels.

The engine-to-engine repeatability of the parameter estimates was within 10% except for the compressor time constant. The right engine time constant is 35% longer than the left. Fan speed responses are the same. The fuel flow to rotor speed gains are nearly the same, hence, the engine fuel consumptions are nearly equal. Fan speed responses are 50% slower than compressor time constants.

The utilization of automated parameter identification procedures has provided a significant improvement over classical methods. The number of parameters estimated is far greater than previously available from graphical techniques. Run-to-run repeatability has been demonstrated for many of the variables.

The established system identification routines can be used in the design and evaluation of future flight test applications. Several of these areas are mentioned below.

The tests described in this report primarily produced linear dynamic results. The scope of the effort was restricted to generally linear models relating the engine response near full power. A more complete representation would use response data from a larger power envelope to estimate both steady state and dynamic coefficients.

A nonlinear model can be used to match the response using this data for the full envelope of operation including nozzle angle and choke effects. Pressure data in the duct and tailpipe could be matched much more accurately using a quasi-linear model of the following form:

$$\dot{p} = -\lambda(p-f(N))$$

where the function, $f(.)$, describes the nonlinear static operating line response in pressure. The results for duct pressure response indicate that the choice of λ is not important since $\lambda > 20\ sec^{-1}$ for both the duct and tailpipe dynamics.

The accuracy of the identification procedure can be improved using optimal input design. These techniques build upon the results of this study. Estimates for model parameters developed from sawtooth and doublet inputs form the input design model. Throttle input time series are generated from the design procedure which could be programmed on the AWJSTOLR aircraft flight computer as throttle rate commands. Data from these flight tests would be used with the identification program to calculate a revised set of parameter estimates. This procedure would produce far more efficient utilization of the flight test time by enhancing parameter identifiability. Effects of nozzle position and choke deflection on thrust dynamics could be efficiently evaluated.

REFERENCES

1. Cleveland, W.B., R.F. Vomaske, and S.R.M. Sinclair, "Augmentor Wing Jet STOL Research Aircraft Digital Simulation," NASA TM X-62,149, Ames Research Center, April 1972.

2. Johns, J. DelFrate, P., and Henisley, D., "Aug-Wing Airplane Simulation," NASA PR 4-76, Ames Research Center, Computer Sciences Corporation, October 1976.

3. De Hoff, R.L. and W.E. Hall, Jr., "System Identification Principles Applied to Multivariable Control and Performance Monitoring of the F100 Engine," presented at 1977 JACC, San Francisco, CA, July 1977.

4. De Hoff, R.L., W.E. Hall, R.J. Adams, and N.K. Gupta, "F100 Multivariable Control Synthesis Program - Development of a Multivariable Control for the F100 Turbofan Engine," AFAPL-TR-77-35, June 1977.

5. Szuch, J. and Seldner, Kurt, "Real Time Simulation of the F100-PW-100 Turbofan Engine using the Hybrid Computer," NASA TM X-3261, August 1975.

6. Gupta, N.K. and W.E. Hall, "System Identification for Nonlinear Aerodynamic Flight Regimes," Journal of Spacecraft and Rockets, Vol. 14, No. 2, February 1977.

PRECEDING PAGE BLANK NOT FILMED

APPENDIX A

LISTING OF SPEY ENGINE SIMULATION AND IDENTIFICATION PROGRAM

PRECEDING PAGE BLANK NOT FILMED

```
      PROGRAM SPEY(INPUT,OUTPUT,TAPE5=INPUT,TAPE6=OUTPUT,TAPE2=/12000)   JUN17   1
C                                                                        SPEY    3
C                                                                        SPEY    4
C   SPEY ENGINE SIMULATION AND IDENTIFICATION PROGRAM                    SPEY    5
C        ANJSTOLRA FLIGHT TEST PROGRAM                                   SPEY    6
C                                                                        SPEY    7
C        SYSTEMS CONTROL, INC (VT)                                       SPEY    8
C        1801-PAGE MILL ROAD                                             SPEY    9
C        PALO ALTO, CALIFORNIA                                           SPEY   10
C        ATTN: R.L.DEHOFF                                                SPEY   11
C                                                                        SPEY   12
C                                                                        SPEY   13
      EXTERNAL FUNC,FUNCT                                                JUN27   1
      REAL KTH,KAF,KA1,KA2,KFSF,KFBIAS                                   SPEY   15
      LEVEL 2,XDATA                                                      JUN15   1
      COMMON /ENGINE/                                                    SPEY   16
     A PDINT , TIME , DELTC , DELTMS , WFMSN ,                           SPEY   17
     B XNHMSN , XNLMSN , PT6MSN , PTDMSN ,                               SPEY   18
     C DELTPO , WFMEST , XNH , XNL , PT6 ,                               SPEY   19
     D PTD , DELTT , DELTTS , WFMB , WFFLWM ,                            SPEY   20
     E WFEST , DELTT1 , DELTT2 , EPSRPM ,                                SPEY   21
     F DTHROT , DAREA , FMS1 , FMS2 , FMFS1 ,                            SPEY   22
     G FMFS2 , THRERR , FULERR , XHSERR ,                                SPEY   23
     H XLSERR , PT6ERR , PTDERR                                          SPEY   24
      COMMON /ENGINE/  DUM1(100)                                         JUN14   2
C                                                                        SPEY   25
      COMMON /CONSTS/ START,CH(8),                                       SPEY   26
     A DLINK1,AL0 , AL1 , AL2 , BPOT0 ,                                  SPEY   27
     B BPOT1 , DLINK2 , KTH , ALPHA , KAF ,                              SPEY   28
     C CFCNTR , ZETA , OM , OMN , SIG , DT ,                             SPEY   29
     D CLAG , CLAGD , CLAGG  , CF ,                                      SPEY   30
     E AFL , CHL , FLAG , FLAGD , FLAGG ,                                SPEY   31
     F TLAG , TLAGD , TLAGG  , TGAIN ,                                   SPEY   32
     G DLAG , DLAGD , DLAGG  , DGAIN ,                                   SPEY   33
     H KA1 , KA2 , ENGNO , EPSBIS ,                                      SPEY   34
     I KFSF , KFBIAS , BIT                                               SPEY   35
      COMMON /CONSTS/                                                    SPEY   36
     A PTDBIS , PT6BIS , XNLBIS ,                                        SPEY   37
     B NM,NP,NF,NDP,NFIRST,NINC,SPRINT,CPRNT,                            SPEY   38
     C IPARM(20),ERRPNT(6),R(6),NSIG,                                    SPEY   39
     D EPS , DELTA , MAXFN , IOPT , PARMMQ(4) ,                          SPEY   40
     E FILENO , STIME , FLGTNO , HUNDEL , HUNDPO ,                       SPEY   41
     F HUNMFF , HUNNH , HUNNL , HUNPT6 , HUNPTD                          SPEY   42
      COMMON /CONSTS/  DUM2(100)                                         JUN14   3
C                                                                        SPEY   43
      COMMON /DATA/XDATA(10,6000)                                        JUL28   1
C                                                                        SPEY   45
      COMMON /SYMBOL/NDSYMB,NCSYMB,DSYMB(50),CSYMB(150)                  SPEY   46
C                                                                        SPEY   47
      COMMON /PLOTS/CPLOT,PLOTF,IND1,A(200,7),IMAG4(5151),PDATA(200,20)  JUN15   2
C                                                                        SPEY   49
      DIMENSION P(20),PARM(1),F(10),XJAC(200),XJTJ(200),WORK(250)        SPEY   50
      DIMENSION RLAB(22),DEIG(20),ZVECT(400),WK(250)                     JUL28B  1
      DIMENSION HESS(20)                                                 JUN28   1
      DIMENSION DISP(200)                                                JUN30   1
C                                                                        SPEY   52
      EQUIVALENCE (PARM(1),START)                                        SPEY   53
```


PRECEDING PAGE BLANK NOT FILMED

```
C
      NAMELIST /INPUT/ START,CH,
     A DLINK1,AL0,AL1,AL2,BPOT0,BPOT1,DLINK2,KTH,ALPHA,KAF,CFCNTR,
     B ZETA,OM,OMN,SIG,DT,CLAG,CF,AFL,AHL,FLAG,TLAG,TGAIN,DLAG,
     C DGAIN,KA1,KA2,ENGNO,EPSBIS,PTDBIS,PT6BIS,XNLBIS,
     D NM,NP,NF,NDP,NFIRST,NLAST,NINC,SPRINT,CPRNT,IPARM,ERRPNT,
     E R,NSIG,EPS,DELTA,MAXFN,IOPT,PARMMQ,KFSF,KFBIAS,BIT,
     F FILENO,STIME,FLGINO,HUNDEL,HUNDPO,HUNMFF,HUNNH,HUNNL,
     G HUNPT6,HUNPTD,DFAC,CPLOT,IOPTIM,IEHESS,
     H HESS,CHL
C
C
      DATA (RLAB(I),I=1,2)/4HPARM,4HETER/
C
C ***INITIALIZE VARIABLES***
C
      CALL SETUP
C
      DFAC=0.1
      CPLOT=0.0
      PLOTF=0.0
      IOPTIM=0
      IEHESS=0
C
C ***READ INPUT DATA***
C
      READ(5,INPUT)
      CALL CPRINT
C
      DT=0.02*NINC
C ***READ DATA***
C
      IF(BIT.LT.0.0) CALL RDATA
      IF(BIT.GE.0.0) CALL TDATA
C
C ***INSERT INITIAL PARAMETER GUESSES***
C
      DO 220 I=1,NP
      IND=IPARM(I)
      P(I)=PARM(IND)
  220 CONTINUE
C
C ***PERTURB INITIAL GUESSES FOR BIT CASE***
C
      IF(BIT.LT.0.0) GO TO 200
      DO 225 I=1,NP
      P(I)=P(I)*(1.+DFAC)
  225 CONTINUE
C
  200 CONTINUE
      IF(IOPTIM.EQ.1) GO TO 235
C
C ***OPTIMIZATION ROUTINE***
C
      CALL ZXSSQ(FUNC,NF,NP,NSIG,EPS,DELTA,
     1           MAXFN,IOPT,PARMMQ,P,SSQ,F,
     2           XJAC,NF,XJTJ,WORK,INFER,IER)
```


ORIGINAL PAGE IS OF POOR QUALITY

```
      GO TO 230                                                         JUN27      5
C                                                                       JUN27      6
C ***QUASI-NEWTON OPTIMIZATION***                                       JUN27      7
C                                                                       JUN27      8
  235 CONTINUE                                                          JUN27      9
      IF(IEHESS.EQ.0) GO TO 239                                         JUN28      5
      IND=NP*(NP+1)/2                                                   JUN28B     1
      DO 237 I=1,IND                                                    JUN28B     2
      XJTJ(I)=0.0                                                       JUN28C     1
  237 CONTINUE                                                          JUN28B     4
      DO 238 I=1,NP                                                     JUN28      6
      IND=I*(I+1)/2                                                     JUN28      7
      XJTJ(IND)=HESS(I)                                                 JUN28      8
  238 CONTINUE                                                          JUN28      9
C                                                                       JUN28     10
  239 CONTINUE                                                          JUN28     11
      CALL ZXMIN(FUNCT,NP,NSIG,MAXFN,IEHESS,                            JUN28     12
     *           P,XJTJ,XJAC,SSQ,WORK,IER)                              JUN28     13
C                                                                       JUN27     11
  230 CONTINUE                                                          JUN27     12
C                                                                       SPEY     106
C ***OUTPUT RESULTS***                                                  SPEY     107
C                                                                       SPEY     108
      CALL CPRINT                                                       SPEY     109
C                                                                       SPEY     110
      WRITE(6,100)                                                      SPEY     111
  100 FORMAT(1H1,10X,29HFINAL RESULTS OF OPTIMIZATION/)                 SPEY     112
C                                                                       SPEY     113
      IF(IOPTIM.EQ.0) WRITE(6,122)                                      JUN28     14
      IF(IOPTIM.EQ.1) WRITE(6,123)                                      JUN28     15
  122 FORMAT(11X,32HMARQUART NONLINEAR LEAST SQUARES//)                 JUL28      3
  123 FORMAT(11X,19HQUASI-NEWTON METHOD//)                              JUL28      4
      IF(NP.EQ.0) GO TO 50                                              SPEY     114
      WRITE(6,101)                                                      SPEY     115
  101 FORMAT(11X,8HPARM NO.,4X,8HVARIABLE,2X,                           SPEY     116
     * 8HLOCATION,4X,5HVALUE)                                           SPEY     117
C                                                                       SPEY     118
      DO 2 I=1,NP                                                       SPEY     119
      IND=IPARM(I)                                                      SPEY     120
      WRITE(6,102) I,CSYMB(IND),IND,P(I)                                SPEY     121
  102 FORMAT(13X,I3,8X,A6,5X,I3,5X,G12.6)                               SPEY     122
    2 CONTINUE                                                          SPEY     123
C                                                                       SPEY     124
   50 CONTINUE                                                          SPEY     125
      IF(IOPTIM.EQ.1) CALL FUNC(P,NP,NF,F)                              JUN27     13
C                                                                       SPEY     126
      WRITE(6,103)                                                      SPEY     127
  103 FORMAT(///10X,32HFINAL ROOT MEAN SQUARE RESIDUALS/)               JUL28B     2
C                                                                       SPEY     129
      IF(NF.EQ.0) GO TO 51                                              SPEY     130
      WRITE(6,104)                                                      SPEY     131
  104 FORMAT(11X,9HERROR NO.,3X,8HRESIDUAL,2X,                          SPEY     132
     * 8HLOCATION,4X,5HVALUE,12X,6HWEIGHT)                              SPEY     133
C                                                                       SPEY     134
      DO 3 I=1,NF                                                       SPEY     135
      IND=ERRPNT(I)                                                     SPEY     136
      NPOINT=NDP/NINC                                                   JUL28      6
```

```
      F(I)=SQRT(F(I)**2*R(IND)/NPOINT)                                  JUL28     7
      WRITE(6,105) I,DSYMB(IND+29),IND,F(I),R(IND)                      SPEY    138
  105 FORMAT(13X,I3,8X,A6,5X,I3,5X,G12.6,5X,G12.6)                      SPEY    139
    3 CONTINUE                                                          SPEY    140
C                                                                       JUL28     8
      RMSSQ=SQRT(SSQ/NPOINT)                                            JUL28     9
      WRITE(6,125) RMSSQ                                                JUL28    10
  125 FORMAT(19X,17HAVERAGE RMS ERROR,7X,G12.6)                         JUL28B    3
C                                                                       JUL28    12
C                                                                       SPEY    141
   51 CONTINUE                                                          SPEY    142
C                                                                       SPEY    143
      WRITE(6,106)                                                      SPEY    144
  106 FORMAT(///,10X,16HFINAL STATISTICS/)                              SPEY    145
C                                                                       SPEY    146
C                                                                       JUN27    14
C ***DUMMY RESULTS FOR QUASI-NEWTON***                                  JUN27    15
C                                                                       JUN27    16
      IF(IOPTIM.EQ.0) GO TO 260                                         JUN27    17
      WORK(4)=0.0                                                       JUN27    18
      WORK(5)=0.0                                                       JUN27    19
  260 CONTINUE                                                          JUN27    20
C                                                                       JUN27    21
      WRITE(6,107) SSQ,(WORK(I),I=1,5)                                  SPEY    147
  107 FORMAT(                                                           SPEY    148
     *       11X,32HRESIDUAL SUM OF SQUARES          =,G12.6/           SPEY    149
     *       11X,32HNORM OF THE GRADIENT             =,G12.6/           SPEY    150
     *       11X,32HNO.OF FUNCT EVALUATIONS          =,G12.6/           SPEY    151
     *       11X,32HEST NO. OF SIGN. DIGITS          =,G12.6/           SPEY    152
     *       11X,32HFINAL MARQUARDT PARAMETER        =,G12.6/           SPEY    153
     *       11X,32HNUMBER OF ITERATIONS             =,G12.6/           SPEY    154
     * //)                                                              SPEY    155
C                                                                       SPEY    156
      IF(IOPTIM.EQ.1) GO TO 265                                         JUL28    13
      WRITE(6,108) INFER                                                SPEY    157
  108 FORMAT(11X,17HCONVERGENCE CODE=I3/)                               SPEY    158
  265 CONTINUE                                                          JUL28    14
C                                                                       SPEY    159
C                                                                       SPEY    160
      IF(IER.EQ.0) WRITE(6,109)                                         SPEY    161
  109 FORMAT(10X,18HNORMAL TERMINATION)                                 SPEY    162
C                                                                       SPEY    163
C ***ABNORMAL TERMINATION ENDING MESSAGES***                            SPEY    164
C                                                                       SPEY    165
      IF(IER.EQ.129) WRITE(6,110)                                       SPEY    166
      IF(IOPTIM.EQ.1) GO TO 270                                         JUN27    22
      IF(IER.EQ.130) WRITE(6,111)                                       SPEY    167
      IF(IER.EQ.131) WRITE(6,112)                                       SPEY    168
      IF(IER.EQ.132) WRITE(6,113)                                       SPEY    169
      IF(IER.EQ.133) WRITE(6,114)                                       SPEY    170
      IF(IER.EQ. 38) WRITE(6,115)                                       SPEY    171
      GO TO 271                                                         JUN27    23
  270 CONTINUE                                                          JUN27    24
      IF(IER.EQ.130) WRITE(6,121)                                       JUN27    25
      IF(IER.EQ.131) WRITE(6,114)                                       JUN27    26
C                                                                       SPEY    172
  110 FORMAT(10X,33HSINGULAR JACOBIAN-RECOVERY FAILED)                  SPEY    173
```

ORIGINAL PAGE IS OF POOR QUALITY

```
  111 FORMAT(10X,21HINPUT PARAMETER ERROR)                          SPEY     174
  112 FORMAT(10X,36HMAXIMUM MARQUARDT PARAMETER EXCEEDED)           SPEY     175
  113 FORMAT(10X,33HSINGULAR JACOBIAN-RECYCLE FAILURE)              SPEY     176
  114 FORMAT(10X,31HMAX NO. OF FUNCT EVALS EXCEEDED)                SPEY     177
  115 FORMAT(10X,38HWARNING-JACOBIAN ZERO-STATIONARY POINT)         SPEY     178
  121 FORMAT(10X,25HROUND OFF ERROR TOO LARGE)                      JUN27     27
  271 CONTINUE                                                      JUN27     28
C                                                                   SPEY     179
C ***PRINT INFORMATION MATRIX***                                    SPEY     180
C                                                                   SPEY     181
      IF(NP.EQ.0.0) GO TO 310                                       SPEY     182
      DO 300 I=1,NP                                                 SPEY     183
      IND=IPARM(I)                                                  SPEY     184
      RLAB(I+2)=CSYMB(IND)                                          SPEY     185
  300 CONTINUE                                                      SPEY     186
C                                                                   SPEY     187
C                                                                   JUN30      8
      WRITE(6,116)                                                  SPEY     188
  116 FORMAT(1H1,/30X,25HSCALED INFORMATION MATRIX)                 JUL28     15
C                                                                   SPEY     190
      CALL USWLSM(RLAB,0,0,0,NP,XJTJ)                               SPEY     191
C                                                                   SPEY     192
C ***CALCULATE EIGENSYSTEM***                                       SPEY     193
C                                                                   SPEY     194
      WRITE(6,117)                                                  SPEY     195
  117 FORMAT(//10X,33HEIGENSYSTEM OF INFORMATION MATRIX/)           SPEY     196
C                                                                   SPEY     197
      CALL EIGRS(XJTJ,NP,2,DEIG,ZVECT,NP,WK,IER)                    JUL28B     4
C                                                                   SPEY     199
      WRITE(6,118) (DEIG(I),I=1,NP)                                 SPEY     200
  118 FORMAT(10X,12HEIGENVALUES:/20(10X,G12.6/))                    SPEY     201
C                                                                   SPEY     202
      WRITE(6,119)                                                  SPEY     203
  119 FORMAT(/10X,13HEIGENVECTORS: )                                SPEY     204
C                                                                   JUL28     17
      WRITE(6,124) WK(1)                                            JUL28     18
  124 FORMAT(10X,32HDECOMPOSITION PERFORMANCE INDEX=,2X,G12.6)      JUL28     19
C                                                                   SPEY     205
      CALL USWTFM(0,0,0,NP,NP,NP,ZVECT)                             SPEY     206
C                                                                   JUN30      9
C ***CALCULATE DISPERSION MATRIX***                                 JUN30     10
C                                                                   JUN30     11
C                                                                   JUN30     12
      CALL LINV2P(XJTJ,NP,DISP,IDGT,D1,D2,WORK,IER)                 JUN30     13
C                                                                   JUN30     14
      IF(IER.EQ.2) GO TO 310                                        JUN30     15
C                                                                   JUN30     16
      WRITE(6,130)                                                  JUN30     17
  130 FORMAT(///10X,22HUNIT DISPERSION MATRIX)                      JUN30     18
C                                                                   JUN30     19
      CALL USWLSM(RLAB,0,0,0,NP,DISP)                               JUN30     20
C                                                                   JUN30     21
C ***ERROR ANALYSIS***                                              JUL28     20
C                                                                   JUL28     21
      IF(IOPTIM.EQ.1) GO TO 330                                     JUL28     22
C                                                                   JUL28     23
      K=(NP+1)*NP/2                                                 JUL28     24
```

ORIGINAL PAGE IS OF POOR QUALITY

```
      DO 331 J=1,NP                                                     JUL28      25
      XJAC(J)=WORK(K+J)                                                 JUL28      26
  331 CONTINUE                                                          JUL28      27
  330 CONTINUE                                                          JUL28      28
C                                                                       JUL28      29
      DO 332 J=1,NP                                                     JUL28      30
      XJAC(J)=XJAC(J)*P(J)/SSQ                                          JUL28      31
  332 CONTINUE                                                          JUL28      32
C                                                                       JUL28      33
      WRITE(6,131)                                                      JUL28      34
  131 FORMAT(//11X,8HPARM NO.,4X,8HVARIABLE,4X,5HVALUE,                 JUL28      35
     * 6X,14HFRACT.STD.DEV.,3X,7HF RATIO,4X,13HFRACT.SENSIT.)           JUL28      36
C                                                                       JUL28      37
      DO 333 I=1,NP                                                     JUL28C      1
      IND=IPARM(I)                                                      JUL28      39
      IDIAG=I*(I+1)/2                                                   JUL28      40
      FSTDV=SQRT(DISP(IDIAG))                                           JUL28      41
      IF(P(I).NE.0.0) FSTDV=FSTDV/P(I)                                  JUL28      42
      FRATIO=1./FSTDV**2                                                JUL28      43
      WRITE(6,132) I,CSYMB(IND),P(I),FSTDV,FRATIO,XJAC(I)               JUL28      44
  132 FORMAT(13X,I3,8X,A6,3X,4(G12.6,2X))                               JUL28      45
  333 CONTINUE                                                          JUL28      46
C                                                                       JUL28      47
C                                                                       SPEY      207
C ***SET UP PLOTS IF REQUIRED***                                        SPEY      208
C                                                                       SPEY      209
  310 CONTINUE                                                          SPEY      210
      IF(CPLOT.NE.0.0) CALL PLOT(P)                                     SPEY      211
      IF(CPLOT.NE.0.0) CALL CPRINT                                      JUN17A      1
C                                                                       SPEY      212
      STOP                                                              SPEY      213
      END                                                               SPEY      214
```

C-2

```
      SUBROUTINE FUNCT(NP,P,F)                                          FUNCT      2
      DIMENSION P(1)                                                    FUNCT      3
      DIMENSION FIND(10)                                                FUNCT      4
C                                                                       FUNCT      5
      COMMON /CONSTS/ START,CH(8),                                      FUNCT      6
     A DLINK1,AL0 , AL1 , AL2 , BPOT0 ,                                 FUNCT      7
     B BPOT1 , DLINK2 , KTH , ALPHA , KAF ,                             FUNCT      8
     C CFCNTR , ZETA , OM , OMN , SIG , DT ,                            FUNCT      9
     D CLAG , CLAGD , CLAGG , CF ,                                      FUNCT     10
     E AFL , CHL , FLAG , FLAGD , FLAGG ,                               FUNCT     11
     F TLAG , TLAGD , TLAGG , TGAIN ,                                   FUNCT     12
     G DLAG , DLAGD , DLAGG , DGAIN ,                                   FUNCT     13
     H KA1 , KA2 , ENGNO , EPSBIS ,                                     FUNCT     14
     I KFSF , KFBIAS , BIT                                              FUNCT     15
      COMMON /CONSTS/                                                   FUNCT     16
     A PTDBIS , PT6BIS , XNLBIS ,                                       FUNCT     17
     B NM,NPX,NF,NDP,NFIRST,NINC,SPRINT,CPRNT,                          FUNCT     18
     C IPARM(20),ERRPNT(6),R(6),NSIG,                                   FUNCT     19
     D EPS , DELTA , MAXFN , IOPT , PARMMQ(4) ,                         FUNCT     20
     E FILENO , STIME , FLGTNO , HUNDEL , HUNDPO ,                      FUNCT     21
     F HUNMFF , HUNNH , HUNNL , HUNPT6 , HUNPTD                         FUNCT     22
      COMMON /CONSTS/DUM2(100)                                          FUNCT     23
C                                                                       FUNCT     24
C                                                                       FUNCT     25
C ***GENERATE FUNCTIONS FOR MINIMIZATION***                             FUNCT     26
C                                                                       FUNCT     27
      CALL FUNC(P,NP,NF,FIND)                                           FUNCT     28
C                                                                       FUNCT     29
C ***GENERATE SUM OF SQUARES***                                         FUNCT     30
C                                                                       FUNCT     31
      F=0.0                                                             FUNCT     32
      DO 1 I=1,NF                                                       FUNCT     33
      F=F+FIND(I)**2                                                    FUNCT     34
    1 CONTINUE                                                          FUNCT     35
      RETURN                                                            FUNCT     36
      END                                                               FUNCT     37
```

ORIGINAL PAGE IS OF POOR QUALITY

```
      SUBROUTINE ENGINE                                                 ENGINE     2
C                                                                       ENGINE     3
C ***SPEY ENGINE SIMULATION FOR NASA AWJSTOLRA AIRCRAFT***              ENGINE     4
C                                                                       ENGINE     5
C                    SYSTEMS CONTOL,INC (VT)                            ENGINE     6
C                    1801 PAGE MILL ROAD                                ENGINE     7
C                    PALO ALTO, CALIFORNIA                              ENGINE     8
C                    ATTN: R.L.DEHOFF                                   ENGINE     9
C                                                                       ENGINE    10
C                                                                       ENGINE    11
      REAL KTH,KAF,KA1,KA2,KFSF,KFBIAS                                  ENGINE    12
      COMMON /ENGINE/                                                   ENGINE    13
     A POINT , TIME , DELTC , DELTMS , WFMSN ,                          ENGINE    14
     B XNHMSN , XNLMSN , PT6MSN , PTDMSN ,                              ENGINE    15
     C DELTPO , WFMEST , XNH , XNL , PT6 ,                              ENGINE    16
     D PTD , DELTT , DELTTS , WFMB , WFFLWH ,                           ENGINE    17
     E WFEST , DELTT1 , DELTT2 , EPSRPM ,                               ENGINE    18
     F DTHROT , DAREA , FMS1 , FMS2 , FMFS1 ,                           ENGINE    19
     G FMFS2 , THRERR , FULERR , XHSERR ,                               ENGINE    20
     H XLSERR , PT6ERR , PTDERR                                         ENGINE    21
C                                                                       ENGINE    22
      COMMON /CONSTS/ START,CH(8),                                      ENGINE    23
     A DLINK1,AL0 , AL1 , AL2 , BPOT0 ,                                 ENGINE    24
     B BPOT1 , DLINK2 , KTH , ALPHA , KAF ,                             ENGINE    25
     C CFCNTR , ZETA , OM , OMN , SIG , DT ,                            ENGINE    26
     D CLAG , CLAGD , CLAGG  , CF ,                                     ENGINE    27
     E AFL , CHL , FLAG , FLAGD , FLAGG ,                               ENGINE    28
     F TLAG , TLAGD , TLAGG  , TGAIN ,                                  ENGINE    29
     G DLAG , DLAGD , DLAGG  , DGAIN ,                                  ENGINE    30
     H KA1 , KA2 , ENGNO , EPSBIS ,                                     ENGINE    31
     I KFSF , KFBIAS , BIT                                              ENGINE    32
      COMMON /CONSTS/                                                   ENGINE    33
     A PTDBIS , PT6BIS , XNLBIS ,                                       ENGINE    34
     B NM,NP,NF,NDP,NFIRST,NINC,SPRINT,CPRNT,                           ENGINE    35
     C IPARM(20),ERRPNT(6),R(6),NSIG,                                   ENGINE    36
     D EPS , DELTA , MAXFN , IOPT , PARMMQ(4) ,                         ENGINE    37
     E FILENO , STIME , FLGTNO , HUNDEL , HUNDPO ,                      ENGINE    38
     F HUNMFF , HUNNH , HUNNL , HUNPT6 , HUNPTD                         ENGINE    39
C                                                                       JUN29      1
      SOFT(XI,XM,XB)=AMAX1(0.,XI,((XI-XB)*XB)/(XB-XM)+XB)               JUN29      2
C                                                                       ENGINE    40
      IF(START.EQ.0.0) GO TO 10                                         ENGINE    41
C                                                                       ENGINE    42
C ***INITIALIZATION PASS***                                             ENGINE    43
C                                                                       ENGINE    44
      THRERR = 0.0                                                      JUN14A     1
      FULERR = 0.                                                       JUN14A     2
      XHSERR = 0.0                                                      JUN14A     3
      XLSERR = 0.                                                       JUN14A     4
      PT6ERR = 0.0                                                      JUN14A     5
      PTDERR = 0.0                                                      JUN14A     6
      DLINK1=AL2*DELTC**2+AL1*DELTC+AL0                                 JUN17B     1
      DLINK1=SOFT(DLINK1,-100.,0.05)                                    JUN29B     1
      DELTT=DELTC-DLINK1                                                JUN17B     2
      DELTTS=DELTC                                                      ENGINE    47
      DTHROT=DELTT-DLINK2                                               JUN17B     3
C                                                                       JUN29B     2
```

```
C ***STABILITY LIMITS***                                                JUN29B    3
C                                                                       JUN29B    4
      CLAG=SOFT(CLAG,-100.,0.1    )                                     JUN29B    5
      FLAG=SOFT(FLAG,-100.,0.1    )                                     JUN29B    6
      TLAG=SOFT(TLAG,-100.,.005   )                                     JUN29B    7
      DLAG=SOFT(DLAG,-100.,.005   )                                     JUN29B    8
      KAF =SOFT(KAF ,-100.,0.5    )                                     JUN29B    9
      CF  =SOFT(CF  ,-100.,.01    )                                     JUN29B   10
      DLINK2=SOFT(DLINK2,-100.,0.01)                                    JUN29B   11
C                                                                       ENGINE   50
C ***FLOWMETER SETUP***                                                 ENGINE   51
C                                                                       ENGINE   52
      SIG=-1./(ZETA*OMN)                                                ENGINE   53
      OM=SQRT(OMN**2-SIG**2)                                            ENGINE   54
          F11=EXP(SIG*DT)*COS(OM*DT)                                    ENGINE   55
          F12=EXP(SIG*DT)*SIN(OM*DT)                                    ENGINE   56
          F22=F11                                                       ENGINE   57
          F21=-F12                                                      ENGINE   58
         GS=(EXP(SIG*DT)*(SIG*SIN(OM*DT)-OM*COS(OM*DT))+OM)/OMN**2      ENGINE   59
         GC=(EXP(SIG*DT)*(SIG*COS(OM*DT)+OM*SIN(OM*DT))-SIG)/OMN**2     ENGINE   60
          G1=(OM/2)*(GS-GC)                                             ENGINE   61
          G2=-G1                                                        ENGINE   62
C                                                                       ENGINE   63
      WFMEST=WFMSN                                                      JUN17B    4
C                                                                       ENGINE   72
C ***ROTOR SPEED SETUP***                                               ENGINE   73
C                                                                       ENGINE   74
      XNH=XNHMSN                                                        ENGINE   75
      CLAGD=0.0                                                         ENGINE   76
      IF(CLAG.NE.0.0) CLAGD=EXP(-DT/CLAG)                               ENGINE   77
      CLAGG=1.-CLAGD                                                    ENGINE   78
C                                                                       ENGINE   79
      XNL=XNLMSN                                                        JUN17B    5
      FLAGD=0.0                                                         ENGINE   81
      IF(FLAG.NE.0.0) FLAGD=EXP(-DT/FLAG)                               ENGINE   82
      FLAGG=1.-FLAGD                                                    ENGINE   83
C                                                                       ENGINE   84
C ***PRESSURE DYNAMICS SETUP***                                         ENGINE   85
C                                                                       ENGINE   86
      PT6=PT6MSN                                                        JUN17B    6
      TLAGD=0.0                                                         ENGINE   88
      IF(TLAG.NE.0.0) TLAGD=EXP(-DT/TLAG)                               ENGINE   89
      TLAGG=1.-TLAGD                                                    ENGINE   90
C                                                                       ENGINE   91
      PTD=PTDMSN                                                        JUN17B    7
      DLAGD=0.0                                                         ENGINE   93
      IF(DLAG.NE.0.0) DLAGD=EXP(-DT/DLAG)                               ENGINE   94
      DLAGG=1.-DLAGD                                                    ENGINE   95
C                                                                       ENGINE   97
C                                                                       ENGINE   98
C ***MAIN ROUTINE***                                                    ENGINE   99
C                                                                       ENGINE  100
   10 CONTINUE                                                          ENGINE  101
C                                                                       ENGINE  102
C ***LINKAGE TO THROTTLE***                                             ENGINE  103
C                                                                       ENGINE  104
      CALL HYSTER(DELTC,DELTT,DLINK1)                                   ENGINE  106
```

ORIGINAL PAGE IS OF POOR QUALITY

```
      C
      C ***THROTTLE PICKOFF***
      C
            DELTPO=BPOT1*DELTT + BPOTO                                  JUN17     3
            DELTT1=DELTT
            DELTT2=(DFLTMS-BPOTO)/BPOT1
      C
            DELTTS=DELTT1
            IF(CH(1).EQ.1) DELTTS=DELTT2
      C
      C ***ENGINE CONTROL MODEL***
      C
            CALL HYSTER(DELTTS,DTHROT,DLINK2)
            XH=XNH
            IF(CH(2).EQ.1) XH=XNHMSN
            EPSRPM=KTH*(DTHROT-31.5)-(XH-100.)+EPSBIS
      C
            DAREA=EPSRPM+ALPHA*EPSRPM**2
            IF(CH(8).EQ.0.0) CFCNTR=CF                                  JUN30B    1
            WFMB=KAF*DAREA+(XH-100.)/CFCNTR+100.
      C
      C ***FLOWMETER***
      C
      C
            IF(START.EQ.0.0) GO TO 20                                   JUN17B    8
            FMS1=0.5*(WFMB-100.)                                        JUN17B    9
            FMS2=FMS1                                                   JUN17B   10
            FMFSL1=FMS1                                                 JUN17B   11
            FMFSL2=FMS2                                                 JUN17B   12
         20 CONTINUE                                                    JUN17B   13
            FMS1=F11*FMS1+F12*FMS2+G1*(WFMB-100.)                       JUN17B   14
            FMS2=F21*FMS1+F22*FMS2+G2*(WFMB-100.)
            WFFLWM=(FMS1+FMS2+100.)*KFSF                                AUG2      1
      C
      C ***FUEL FLOW FILTER***
      C
            FMFS1=FMS1+KA1*(WFMSN-WFMEST)
            FMFS2=FMS2+KA2*(WFMSN-WFMEST)
            WFMEST=(FMFS1+FMFS2+100.)*KFSF                              AUG2      2
            IF(CH(3).EQ.1) WFFLWM=WFMEST
            IF(CH(3).EQ.2) WFMEST=WFMB                                  AUG1      2
      C
      C ***BACKWARDS CALCULATION***
      C
            WF1=(1./G1)*(FMFS1-F11*FMFSL1-F12*FMFSL2)
            WF2=(1./G2)*(FMFS2-F21*FMFSL1-F22*FMFSL2)
            WFEST=0.5*(WF1+WF2)+100.
            FMFSL1=FMFS1
            FMFSL2=FMFS2
      C
      C ***COMPRESSOR***
      C
            WF=WFMB-KFBIAS
            IF(CH(4).EQ.1.) WF=WFEST-KFBIAS                             AUG2      3
            IF(CH(4).EQ.2.)  WF=(WFMSN-KFBIAS)/KFSF                     AUG2      4
      C
            XNH=CLAGD*(XNH-100.)+CLAGG*CF*(WF-100.)+100.
```

```
      C                                                                 ENGINE    155
      C ***FAN ROTOR***                                                 ENGINE    156
      C                                                                 ENGINE    157
            XN=XNH                                                      ENGINE    158
            IF(CH(5).EQ.1) XN=XNHMSN                                    ENGINE    159
      C                                                                 ENGINE    160
            XNL=FLAGD*(XNL-100.)+FLAGG*CHL*((XN-100.)*(1.-AFL)          ENGINE    161
           A      +CF*(WF-100.)*AFL) + 100.                             ENGINE    162
      C                                                                 ENGINE    163
            XNL=XNL+XNLBIS                                              ENGINE    164
      C                                                                 ENGINE    165
      C ***TAIL PIPE***                                                 ENGINE    166
      C                                                                 ENGINE    167
            XN=XNH                                                      ENGINE    168
            IF(CH(6).EQ.1) XN=XNHMSN                                    ENGINE    169
      C                                                                 ENGINE    170
            PT6=TLAGD*(PT6-100.)+TLAGG*((XN-100.)*TGAIN)+100.           JUN17B     15
            PT6=PT6+PT6BIS                                              JUN17B     16
      C                                                                 ENGINE    172
      C ***DUCT***                                                      ENGINE    173
      C                                                                 ENGINE    174
            XN=XNL-XNLBIS                                               JUN17A      2
            IF(CH(7).EQ.1.) XN=XNLMSN-XNLBIS                            JUN17       5
      C                                                                 ENGINE    177
            PTD=DLAGD*(PTD-100.)+DLAGG*((XN-100.)*DGAIN)+100.           JUN17B     17
            PTD=PTD+PTDBIS                                              JUN17B     18
      C                                                                 ENGINE    179
            START=0.0                                                   JUN21       1
      C                                                                 JUN21       2
            RETURN                                                      ENGINE    180
            END                                                         ENGINE    181
```

```
      SUBROUTINE SETUP                                                  SETUP      2
C                                                                       SETUP      3
      REAL KTH,KAF,KA1,KA2,KFSF,KFBIAS                                  SETUP      4
      COMMON /CONSTS/ START,CH(8),                                      SETUP      5
     A DLINK1,AL0 , AL1 , AL2 , BPOT0 ,                                 SETUP      6
     B BPOT1 , DLINK2 , KTH , ALPHA , KAF ,                             SETUP      7
     C CFCNTR , ZETA , OM , OMN , SIG , DT ,                            SETUP      8
     D CLAG , CLAGD , CLAGG  , CF ,                                     SETUP      9
     E AFL , CHL , FLAG , FLAGD , FLAGG ,                               SETUP     10
     F TLAG , TLAGD , TLAGG  , TGAIN ,                                  SETUP     11
     G DLAG , DLAGD , DLAGG  , DGAIN ,                                  SETUP     12
     H KA1 , KA2 , ENGND , EPSBIS ,                                     SETUP     13
     I KFSF , KFBIAS , BIT                                              SETUP     14
      COMMON /CONSTS/                                                   SETUP     15
     A PT0BIS , PT6BIS , XNLBIS ,                                       SETUP     16
     B NM,NP,NF,NDP,NFIRST,NINC,SPRINT,CPRNT,                           SETUP     17
     C IPARM(20),ERRPNT(6),R(6),NSIG,                                   SETUP     18
     D EPS , DELTA , MAXFN , IOPT , PARMMQ(4) ,                         SETUP     19
     E FILENO , STIME , FLGTNO , HUNDEL , HUNDPO ,                      SETUP     20
     F HUNMFF , HUNNH , HUNNL , HUNPT6 , HUNPTO                         SETUP     21
      DIMENSION DUM(150)                                                SETUP     22
      EQUIVALENCE (DUM(1),START)                                        SETUP     23
C                                                                       SETUP     24
      DO 1 I=1,150                                                      SETUP     25
    1 DUM(I)=-999.0                                                     SETUP     26
C                                                                       SETUP     27
C ***INITIAL PARAMETER GUESSES***                                       SETUP     28
C      JUNE 1,1977                                                      SETUP     29
C                                                                       SETUP     30
      START=1.0                                                         SETUP     31
      DO 2 I=1,8                                                        SETUP     32
    2 CH(I)=0.0                                                         SETUP     33
C                                                                       SETUP     34
C     DLINK1=                                                           SETUP     35
      AL0=0.1                                                           SETUP     36
      AL2=0.0                                                           SETUP     37
      AL1=0.0                                                           SETUP     38
      BPOT0=-291.                                                       SETUP     39
      BPOT1=40.22                                                       SETUP     40
      DLINK2=0.5                                                        SETUP     41
      DLINK2=0.1                                                        SETUP     42
      KTH=0.7212                                                        SETUP     43
      ALPHA=0.10                                                        SETUP     44
      KAF=5.04                                                          SETUP     45
      CFCNTR=0.140                                                      SETUP     46
      ZETA=0.2                                                          SETUP     47
C     OM=                                                               SETUP     48
      OMN=13.0                                                          SETUP     49
C     SIG=                                                              SETUP     50
      DT=0.020                                                          SETUP     51
      CLAG=0.50                                                         SETUP     52
C     CLAGD=                                                            SETUP     53
C     CLAGG=                                                            SETUP     54
      CF=0.140                                                          SETUP     55
      AFL=0.0                                                           SETUP     56
      CHL=2.81                                                          SETUP     57
      FLAG=1.0                                                          SETUP     58
```


ORIGINAL PAGE IS
OF POOR QUALITY

```
C     FLAGG=                                                    SETUP    59
C     FLAGD=                                                    SETUP    60
      TLAG=0.05                                                 SETUP    61
C     TLAGD=                                                    SETUP    62
C     TLAGG=                                                    SETUP    63
      DLAG=0.10                                                 SETUP    64
C     DLAGD=                                                    SETUP    65
C     DLAGG=                                                    SETUP    66
      DGAIN=0.70                                                SETUP    67
      TGAIN=0.70                                                SETUP    68
      KA1=0                                                     SETUP    69
      KA2=0                                                     SETUP    70
      ENGNO=1                                                   SETUP    71
      EPSBIS=0.0                                                SETUP    72
      KFSF=1.0                                                  SETUP    73
      KFBIAS=0.0                                                SETUP    74
      BIT=-999.                                                 SETUP    75
      PTDBIS=0.0                                                SETUP    76
      PT6BIS=0.0                                                SETUP    77
      XNLBIS=0.0                                                SETUP    78
C                                                               SETUP    79
      NM=6                                                      SETUP    80
      NP=0                                                      SETUP    81
      NF=0                                                      SETUP    82
      NDP=1                                                     SETUP    83
      NFIRST=1                                                  SETUP    84
      NINC=1                                                    SETUP    85
      SPRINT=0.                                                 SETUP    86
      CPRNT=0.                                                  SETUP    87
      DO 3 I=1,20                                               SETUP    88
    3 IPARM(I)=9+I                                              SETUP    89
      DO 4 I=1,6                                                SETUP    90
    4 ERRPNT(I)=I                                               SETUP    91
      DO 5 I=1,6                                                SETUP    92
    5 R(I)=1.0                                                  SETUP    93
      NSIG=4                                                    SETUP    94
      EPS=1.E-4                                                 SETUP    95
      MAXFN=20                                                  SETUP    96
      DELTA=1.E-4                                               SETUP    97
      IOPT=0                                                    SETUP    98
      PARMMQ(1)=0.0                                             SETUP    99
      PARMMQ(2)=0.0                                             SETUP   100
      PARMMQ(3)=0.0                                             SETUP   101
      PARMMQ(4)=0.0                                             SETUP   102
      FILENO=1.0                                                SETUP   103
      STIME=0.0                                                 SETUP   104
      FLGTNO=0.0                                                SETUP   105
      HUNDEL=31.5                                               SETUP   106
      HUNDPD=976                                                SETUP   107
      HUNMFF=5750.                                              SETUP   108
      HUNNH=13350.                                              SETUP   109
      HUNNL=10075.                                              SETUP   110
      HUNPT6=50.                                                SETUP   111
      HUNPTD=50.                                                SETUP   112
                                                                SETUP   113
      RETURN                                                    SETUP   114
      END                                                       SETUP   115
```

```
      IF(I.EQ.NLAST) GO TO 8                                    FUNC    110
      INDEX=INDEX+1                                             FUNC    111
      IF(INDEX.NE.SPRINT.OR.SPRINT.EQ.0) GO TO 4                FUNC    112
      INDEX=0                                                   FUNC    113
      CALL DPRINT(0)                                            FUNC    114
C                                                               FUNC    115
    4 CONTINUE                                                  FUNC    116
C                                                               FUNC    117
    8 IF(SPRINT.NE.0) CALL DPRINT(1)                            FUNC    118
C                                                               FUNC    119
C ***SCALE FUNCTIONS***                                         FUNC    120
C                                                               FUNC    121
      IF(NF.EQ.0) GO TO 53                                      FUNC    122
      DO 10 I=1,NF                                              FUNC    123
      IND=ERRPNT(I)                                             JUL28    48
      F(I)=F(I)/R(IND)                                          JUL28    49
      F(I)=SQRT(F(I))                                           JUL28    50
   10 CONTINUE                                                  JUL28    51
C                                                               FUNC    125
   53 CONTINUE                                                  FUNC    126
      IF(CPRNT.EQ.1.0) WRITE(6,110) (F(I),I=1,NF)               JUN28    23
C                                                               FUNC    128
      RETURN                                                    FUNC    129
      END                                                       FUNC    130
```


ORIGINAL PAGE IS
OF POOR QUALITY

```
      SUBROUTINE FUNC(P,NP,NF,F)                                        FUNC      2
C                                                                       FUNC      3
C ***DRIVER PROGRAM FOR ENGINE SIMULATION AND IDENTIFICATION***         FUNC      4
C                                                                       FUNC      5
      DIMENSION F(1),P(1),X(1),E(1),PARM(1),Y(1)                        FUNC      6
C                                                                       FUNC      7
      REAL KTH,KAF,KA1,KA2,KFSF,KFBIAS                                  FUNC      8
      LEVEL 2,XDATA                                                     JUN15     3
      COMMON /ENGINE/                                                   FUNC      9
     A POINT , TIME , DELTC , DELTMS , WFMSN ,                          FUNC     10
     B XNHMSN , XNLMSN , PT6MSN , PTDMSN ,                              FUNC     11
     C DELTPO , WFNEST , XNH , XNL , PT6 ,                              FUNC     12
     D PTD , DELTT , DELTTS , WFMB , WFFLWM ,                           FUNC     13
     E WFEST , DELTT1 , DELTT2 , EPSRPM ,                               FUNC     14
     F DTHROT , DAREA , FMS1 , FMS2 , FMFS1 ,                           FUNC     15
     G FMFS2 , THRERR , FULERR , XHSERR ,                               FUNC     16
     H XLSERR , PT6ERR , PTDERR                                         FUNC     17
C                                                                       FUNC     18
      COMMON /CONSTS/ START,CH(8),                                      FUNC     19
     A DLINK1,AL0 , AL1 , AL2 , BPOT0 ,                                 FUNC     20
     B BPOT1 , DLINK2 , KTH , ALPHA , KAF ,                             FUNC     21
     C CFCNTR , ZETA , OM , OMN , SIG , DT ,                            FUNC     22
     D CLAG , CLAGD , CLAGG  , CF ,                                     FUNC     23
     E AFL , CHL , FLAG , FLAGD , FLAGG ,                               FUNC     24
     F TLAG , TLAGD , TLAGG  , TGAIN ,                                  FUNC     25
     G DLAG , DLAGD , DLAGG  , DGAIN ,                                  FUNC     26
     H KA1 , KA2 , ENGNO , EPSBIS ,                                     FUNC     27
     I KFSF , KFBIAS , BIT                                              FUNC     28
      COMMON /CONSTS/                                                   FUNC     29
     A PTDBIS , PT6BIS , XNLBIS ,                                       FUNC     30
     B NM,NPX,NFX,NDP,NFIRST,NINC,SPRINT,CPRNT,                         FUNC     31
     C IPARM(20),ERRPNT(6),R(6),NSIG,                                   FUNC     32
     D EPS , DELTA , MAXFN , IOPT , PARMHQ(4) ,                         FUNC     33
     E FILENO , STIME , FLGTNO , HUNDEL , HUNDPO ,                      FUNC     34
     F HUNMFF , HUNNH , HUNNL , HUNPT6 , HUNPTD                         FUNC     35
C                                                                       FUNC     36
      COMMON /DATA/ XDATA(10,1)                                         FUNC     37
C                                                                       FUNC     38
      EQUIVALENCE (START,PARM(1)),                                      FUNC     39
     1            (TIME,X(1)),                                          FUNC     40
     2            (THRERR,E(1)),                                        FUNC     41
     3            (DELTPO,Y(1))                                         FUNC     42
C                                                                       FUNC     43
C ***INSERT PARAMETERS***                                               FUNC     44
C                                                                       FUNC     45
      IF(CPRNT.NE.1.0) GO TO 100                                        JUN28    18
      CALL CPRINT                                                       JUN28    19
      WRITE(6,110) (P(I),I=1,NP)                                        JUN28    20
  110 FORMAT(2X,6G20.10)                                                JUN28    21
  100 CONTINUE                                                          JUN28    22
      INDEX=-1                                                          FUNC     46
      IF(NP.EQ.0) GO TO 50                                              FUNC     47
      DO 1 I=1,NP                                                       FUNC     48
      IND=IPARM(I)                                                      FUNC     49
    1 PARM(IND)=P(I)                                                    FUNC     50
C                                                                       FUNC     51
C ***INITIALIZE SIMULATION***                                           FUNC     52
```

ORIGINAL PAGE IS OF POOR QUALITY

```
      C
         50 CONTINUE
            START = 1.0
            ND=NM+2
            DO 2 I=1,ND
          2 X(I)=XDATA(I,NFIRST)
      C
            POINT=NFIRST
            CALL ENGINE
            IF(SPRINT.NE.0.0) CALL DPRINT(0)
      C
      C
      C ***ZERO INNOVATIONS***
      C
            IF(NF.EQ.0) GO TO 51
            DO 3 I=1,NF
          3 F(I)=0.0
      C
      C ***SIMULATION LOOP***
      C
         51 CONTINUE
            NLAST=NFIRST+(NDP-1)*NINC
            DO 4 I=NFIRST,NLAST,NINC
            POINT=I
      C
            CALL ENGINE
      C
      C
      C ***TRANSFER OUTPUTS TO MEASUREMENTS FOR TEST***
      C
            IF(NF.NE.0.OR.BIT.LT.0.0) GO TO 54
      C
            DO 15 J=1,NM
            X(J+2)=Y(J)
            XDATA(J+2,I)=Y(J)
         15 CONTINUE
      C
         54 CONTINUE
      C
      C ***INSERT MEASUREMENTS***
      C
            DO 5 J=1,ND
          5 X(J)=XDATA(J,I)
      C
      C ***CALCULATE ERRORS***
      C
            DO 6 J=1,NM
          6 E(J)=Y(J)-X(J+2)
      C
      C ***ACCUMULATE ERRORS***
      C
            IF(NF.EQ.0) GO TO 52
            DO 7 J=1,NF
            IND=ERRPNT(J)
          7 F(J)=F(J)+E(IND)**2
      C
         52 CONTINUE
```

```
      SUBROUTINE CPRINT                                                 CPRINT     2
C                                                                       CPRINT     3
      COMMON /CONSTS/ START,CH(8),                                      CPRINT     4
     A DLINK1,AL0 , AL1 , AL2 , BPOT0 ,                                 CPRINT     5
     B BPOT1 , DLINK2 , KTH , ALPHA , KAF ,                             CPRINT     6
     C CFCNTR , ZETA , OM , OMN , SIG , DT ,                            CPRINT     7
     D CLAG , CLAGD , CLAGG  , CF ,                                     CPRINT     8
     E AFL , CHL , FLAG , FLAGD , FLAGG ,                               CPRINT     9
     F TLAG , TLAGD , TLAGG  , TGAIN ,                                  CPRINT    10
     G DLAG , DLAGD , DLAGG  , DGAIN ,                                  CPRINT    11
     H KA1 , KA2 , ENGNO , EPSBIS ,                                     CPRINT    12
     I KFSF , KFBIAS , BIT                                              CPRINT    13
      COMMON /CONSTS/                                                   CPRINT    14
     A PTDBIS , PT6BIS , XNLBIS ,                                       CPRINT    15
     B NM,NP,NF,NDP,NFIRST,NINC,SPRINT,CPRNT,                           CPRINT    16
     C IPARM(20),ERRPNT(6),R(6),NSIG,                                   CPRINT    17
     D EPS , DELTA , MAXFN , IOPT , PARMMQ(4) ,                         CPRINT    18
     E FILENO , STIME , FLGTNO , HUNDEL , HUNDPO ,                      CPRINT    19
     F HUNMFF , HUNNH , HUNNL , HUNPT6 , HUNPTD                         CPRINT    20
C                                                                       CPRINT    21
      COMMON /SYMBOL/NDSYMB,NCSYMB,DSYMB(50),CSYMB(150)                 CPRINT    22
C                                                                       CPRINT    23
      DIMENSION ENLAB(2),IND1(20),IND2(20),IND3(20),IND4(20),PARM(150)  CPRINT    24
      EQUIVALENCE (PARM(1),START)                                       CPRINT    25
      DATA (IND1(I),I=1,10)/                                            CPRINT    26
     * 10,16,11,12,13,14,15,21,22,43/                                   CPRINT    27
      DATA (IND2(I),I=1,10)/                                            CPRINT    28
     * 17,19,18,20,46,47,48,22,24,44/                                   CPRINT    29
      DATA (IND3(I),I=1,10)/                                            CPRINT    30
     * 26,32,29,30,31,52,27,28,33,34/                                   CPRINT    31
      DATA (IND4(I),I=1,10)/                                            CPRINT    32
     * 35,38,51,39,42,50,36,37,40,41/                                   CPRINT    33
C                                                                       CPRINT    34
      DATA ENLAB/6HLEFT  ,6HRIGHT /                                     CPRINT    35
C                                                                       CPRINT    36
      WRITE(6,100)                                                      CPRINT    37
  100 FORMAT(1H1,///)                                                   CPRINT    38
C                                                                       CPRINT    39
      WRITE(6,101)                                                      CPRINT    40
  101 FORMAT(50X,33HSPEY ENGINE SIMULATION PARAMETERS/                  CPRINT    41
     *       54X,25HAWJSTOL RESEARCH AIRCRAFT/                          CPRINT    42
     *       54X,25HSYSTEMS CONTROL, INC (VT)/                          CPRINT    43
     *       57X,20H1801 PAGE MILL ROAD /                               CPRINT    44
     *       56X,21HPALO ALTO, CALIFORNIA//)                            CPRINT    45
C                                                                       CPRINT    46
      WRITE(6,102)                                                      CPRINT    47
  102 FORMAT(56X,21(1H*))                                               CPRINT    48
C                                                                       CPRINT    49
      IF(BIT.LT.0.0) GO TO 10                                           CPRINT    50
C                                                                       CPRINT    51
      WRITE(6,103) BIT                                                  CPRINT    52
  103 FORMAT(56X,1H*,19X,1H*/                                           CPRINT    53
     *       56X,1H*,3X,13HBUILT IN TEST,3X,1H*/                        CPRINT    54
     *       56X,1H*,3X,5HRAMP=,F5.1,6H DEG  /                          CPRINT    55
     *       56X,1H*,19X,1H*/                                           CPRINT    56
     *       56X,21(1H*))                                               CPRINT    57
      GO TO 20                                                          CPRINT    58
```

ORIGINAL PAGE IS OF POOR QUALITY

```
      SUBROUTINE DPRINT(N)                                              DPRINT     2
      COMMON /ENGINE/X(50)                                              DPRINT     3
      COMMON /SYMBOL/NDSYMB,NCSYMB,DSYMB(50),CSYMB(150)                 DPRINT     4
      COMMON/CONST8/DUN(150)                                            DPRINT     5
      COMMON /PLOTS/CPLOT,PLOTF,IND1,A(200,7),IMAG4(5151),PDATA(200,20) JUN15      4
C                                                                       DPRINT     7
C                                                                       DPRINT     8
      DIMENSION P(10,50)                                                DPRINT     9
C                                                                       DPRINT    10
      DATA IND/0/                                                       DPRINT    11
C                                                                       DPRINT    12
      NDSYMB=35                                                         DPRINT    13
      IND=IND+1                                                         DPRINT    14
      DO 1 I=1,NDSYMB                                                   DPRINT    15
      P(IND,I)=X(I)                                                     DPRINT    16
    1 CONTINUE                                                          DPRINT    17
C                                                                       DPRINT    18
      IF(N.EQ.0.AND.IND.NE.10) GO TO 200                                DPRINT    19
      IF(PLOTF.GT.0.0) GO TO 200                                        DPRINT    20
C                                                                       DPRINT    21
      WRITE(6,100)                                                      DPRINT    22
  100 FORMAT(1H1,49X,22HSPEY ENGINE SIMULATION,/                        DPRINT    23
     *          50X,39HENGINE PARAMETER IDENTIFICATION PROGRAM,/        DPRINT    24
     *          50X,24HSYSTEMS CONTROL,INC (VT),/                       DPRINT    25
     *          50X,20HPALO ALTO,CALIFORNIA,/                           DPRINT    26
     *          50X,11HVERSION 001,/)                                   DPRINT    27
C                                                                       DPRINT    28
      DO 2 I=1,NDSYMB                                                   DPRINT    29
      WRITE(6,101) DSYMB(I),(P(J,I),J=1,IND)                            DPRINT    30
    2 CONTINUE                                                          DPRINT    31
  101 FORMAT(1X,A6,1X,10(G12.6))                                        DPRINT    32
      IND=0                                                             DPRINT    33
C                                                                       DPRINT    34
C ***SAVE PLOT DATA IF PLOTTING***                                      DPRINT    35
C                                                                       DPRINT    36
  200 CONTINUE                                                          DPRINT    37
      IF(PLOTF.EQ.0.0) RETURN                                           DPRINT    38
C                                                                       DPRINT    39
      IND1=IND1+1                                                       DPRINT    40
      IF(IND1.GT.200) RETURN                                            DPRINT    41
C                                                                       DPRINT    42
      PDATA(IND1,1)=X(2)                                                DPRINT    43
      DO 210 I=1,7                                                      DPRINT    44
      PDATA(IND1,2*I)=X(I+2)                                            DPRINT    45
  210 CONTINUE                                                          DPRINT    46
C                                                                       DPRINT    47
      DO 220 I=1,7                                                      DPRINT    48
      PDATA(IND1,2*I+1)=X(9+I)                                          DPRINT    49
  220 CONTINUE                                                          DPRINT    50
C                                                                       DPRINT    51
      RETURN                                                            DPRINT    52
      END                                                               DPRINT    53
```

```
      C                                                                 CPRINT     59
        10 CONTINUE                                                     CPRINT     60
      C                                                                 CPRINT     61
           I=ENGNO                                                      CPRINT     62
           J=FLGTNO                                                     CPRINT     63
           K=FILENO                                                     CPRINT     64
           L=STIME                                                      CPRINT     65
           WRITE(6,104) ENLAB(I),J,K,L                                  CPRINT     66
       104 FORMAT(56X,1H*,19X,1H*/                                      CPRINT     67
          * 56X,1H*,2X,A5,7H ENGINE,4X,2H */                            JUN17A      4
          * 56X,1H*,1H ,15H FLIGHT NUMBER ,I3,1H*/                      JUN17A      5
          *       56X,1H*,2X,11HRUN NUMBER ,I2,3X,2H */                 JUN17A      6
          *       56X,1H*,2X,3HST1,I13,2H */                            JUN17A      7
          *       56X,21(1H*))                                          CPRINT     72
      C                                                                 CPRINT     73
        20 CONTINUE                                                     CPRINT     74
      C                                                                 CPRINT     75
           WRITE(6,105)                                                 CPRINT     76
       105 FORMAT(26X,81(1H*)/26X,1H*,19X,1H*,19X,1H*,19X,1H*,19X,1H*/  CPRINT     77
          * 26X,1H*,5X,8HTHROTTLE,6X,1H*,7X,7HCONTROL,                  CPRINT     78
          * 5X,1H*,7X,6HENGINE,6X,1H*,4X,                               CPRINT     79
          * 12HDUCT/EXHAUST,3X,1H*,/                                    CPRINT     80
          * 26X,1H*,19X,1H*,19X,1H*,19X,1H*,19X,1H*/26X,81(1H*))        CPRINT     81
      C                                                                 CPRINT     82
           DO 50 I=1,10                                                 CPRINT     83
           I1=IND1(I)                                                   CPRINT     84
           I2=IND2(I)                                                   CPRINT     85
           I3=IND3(I)                                                   CPRINT     86
           I4=IND4(I)                                                   CPRINT     87
      C                                                                 CPRINT     88
           WRITE(6,110) CSYMB(I1),PARM(I1),                             CPRINT     89
          *             CSYMB(I2),PARM(I2),                             CPRINT     90
          *             CSYMB(I3),PARM(I3),                             CPRINT     91
          *             CSYMB(I4),PARM(I4)                              CPRINT     92
      C                                                                 CPRINT     93
       110 FORMAT(26X,4(1H*,A6,1H=,G12.6),1H*)                          CPRINT     94
        50 CONTINUE                                                     CPRINT     95
      C                                                                 CPRINT     96
           WRITE(6,111)                                                 CPRINT     97
       111 FORMAT(26X,81(1H*)//)                                        CPRINT     98
           WRITE(6,120)                                                 CPRINT     99
       120 FORMAT(26X,41(1H*),6X,34(1H*))                               CPRINT    100
           WRITE(6,121)                                                 CPRINT    101
       121 FORMAT(26X,1H*,12X,16HFULL POWER POINT,11X,1H*,6X,1H*,4X,    CPRINT    102
          * 23HOPTIMIZATION PARAMETERS,5X,1H*)                          CPRINT    103
      C                                                                 CPRINT    104
           WRITE(6,122)                                                 CPRINT    105
       122 FORMAT(26X,1H*,39X,1H*,6X,1H*,32X,1H*)                       CPRINT    106
      C                                                                 CPRINT    107
           WRITE(6,131) HUNDEL,NM                                       CPRINT    108
           WRITE(6,132) HUNDPO,NP                                       CPRINT    109
           WRITE(6,133) HUNMFF,NF                                       CPRINT    110
           WRITE(6,134) HUNNH,NDP                                       CPRINT    111
           WRITE(6,135) HUNNL,NFIRST                                    CPRINT    112
           WRITE(6,136) HUNPT6,NINC                                     CPRINT    113
           IPRNT=SPRINT                                                 CPRINT    114
           WRITE(6,137) HUNPTO,IPRNT                                    CPRINT    115
```

```
      C                                                                 CPRINT   116
        131 FORMAT(                                                     CPRINT   117
           *       26X,1H*,1X,19HTHROTTLE POSITION =,G10.4,9H DEGREES ,1H*,  CPRINT   118
           * 6X,1H*,23H NO.OF MEASUREMENTS =  ,I4,5X,1H*)               CPRINT   119
        132 FORMAT(                                                     CPRINT   120
           *       26X,1H*,1X,19HTHROTTLE  PICKOFF =,G10.4,9H COUNTS  ,1H*,  CPRINT   121
           * 6X,1H*,23H NO.OF PARAMETERS   =  ,I4,5X,1H*)               CPRINT   122
        133 FORMAT(                                                     CPRINT   123
           *       26X,1H*,1X,19HMAIN  FUEL  FLOW  =,G10.4,9H LBM/HOUR,1H*,  CPRINT   124
           * 6X,1H*,23H NO.OF ERROR TERMS  =  ,I4,5X,1H*)               CPRINT   125
        134 FORMAT(                                                     CPRINT   126
           *       26X,1H*,1X,19HCOMPRESSOR  SPEED =,G10.4,9H REV/MIN ,1H*,  CPRINT   127
           * 6X,1H*,23H NO.OF DATA  POINTS =  ,I4,5X,1H*)               CPRINT   128
        135 FORMAT(                                                     CPRINT   129
           *       26X,1H*,1X,19HFAN   SPEED       =,G10.4,9H REV/MIN ,1H*,  CPRINT   130
           * 6X,1H*,23H NO.OF FIRST  POINT =  ,I4,5X,1H*)               CPRINT   131
        136 FORMAT(                                                     CPRINT   132
           *       26X,1H*,1X,19HAUGMENTOR PRESSURE=,G10.4,9H LBF/SQIN,1H*,  CPRINT   133
           * 6X,1H*,23H NO.OF INCREMENT    =  ,I4,5X,1H*)               CPRINT   134
        137 FORMAT(                                                     CPRINT   135
           *       26X,1H*,1X,19HDUCT  PRESSURE    =,G10.4,9H LBF/SQIN,1H*,  CPRINT   136
           * 6X,1H*,23H DATA PRINT INTERVAL=  ,I4,5X,1H*)               CPRINT   137
            WRITE(6,140)                                                CPRINT   138
        140 FORMAT(26X,1H*,39X,1H*,6X,1H*,32X,1H*)                      CPRINT   139
      C                                                                 CPRINT   140
            ICPRNT=CPRNT                                                CPRINT   141
            WRITE(6,141)ICPRNT                                          CPRINT   142
        141 FORMAT(26X,41(1H*),6X,1H*,21H CONSTANT PRINT FLAG=,2X,I4,5X,1H*)  CPRINT   143
      C                                                                 CPRINT   144
            WRITE(6,142) EPS                                            CPRINT   145
            WRITE(6,143) DELTA                                          CPRINT   146
            WRITE(6,144) MAXFN                                          CPRINT   147
            WRITE(6,145) NSIG                                           CPRINT   148
        142 FORMAT(73X,1H*,                                             CPRINT   149
           *     21H EPSILON              =,G11.5,1H*)                  CPRINT   150
        143 FORMAT(73X,1H*,                                             CPRINT   151
           *     21H DELTA                =,G11.5,1H*)                  CPRINT   152
        144 FORMAT(73X,1H*,                                             CPRINT   153
           *     21H MAX FUNCTION EVALS =,2X,I4,5X,1H*)                  CPRINT   154
        145 FORMAT(73X,1H*,                                             CPRINT   155
           *     21H NO.OF SIGNIF DIGITS=,2X,I4,5X,1H*)                  CPRINT   156
      C                                                                 CPRINT   157
            WRITE(6,150)                                                CPRINT   158
        150 FORMAT( 73X,34(1H*))                                        CPRINT   159
      C                                                                 CPRINT   160
            RETURN                                                      CPRINT   161
            END                                                         CPRINT   162
```

ORIGINAL PAGE IS OF POOR QUALITY

```
      BLOCK DATA SYMBOLS                                                SYMBOLS    2
      COMMON /SYMBOL/NDSYMB,NCSYMB,DSYMB(50),CSYMB(150)                 SYMBOLS    3
C                                                                       SYMBOLS    4
      DATA NDSYMB,NCSYMB/35,150/                                        SYMBOLS    5
      DATA DSYMB,CSYMB/200*6H      /                                    SYMBOLS    6
C                                                                       SYMBOLS    7
      DATA (DSYMB(I),I=1 ,10)/                                          SYMBOLS    8
     A 6HPOINT ,                                                        SYMBOLS    9
     B 6HTIME  ,                                                        SYMBOLS   10
     C 6HDELTC ,                                                        SYMBOLS   11
     D 6HDELTMS,                                                        SYMBOLS   12
     E 6HWFMSN ,                                                        SYMBOLS   13
     F 6HXNHMSN,                                                        SYMBOLS   14
     G 6HXNLMSN,                                                        SYMBOLS   15
     H 6HPT6MSN,                                                        SYMBOLS   16
     I 6HPTDMSN,                                                        SYMBOLS   17
     J 6HDELTPO/                                                        SYMBOLS   18
      DATA (DSYMB(I),I=11,20)/                                          SYMBOLS   19
     A 6HWFMEST,                                                        SYMBOLS   20
     B 6HXNH   ,                                                        SYMBOLS   21
     C 6HXNL   ,                                                        SYMBOLS   22
     D 6HPT6   ,                                                        SYMBOLS   23
     E 6HPTD   ,                                                        SYMBOLS   24
     F 6HDELTT ,                                                        SYMBOLS   25
     G 6HDELTTS,                                                        SYMBOLS   26
     H 6HWFMR  ,                                                        SYMBOLS   27
     I 6HWFFLWM,                                                        SYMBOLS   28
     J 6HWFEST /                                                        SYMBOLS   29
      DATA (DSYMB(I),I=21,30)/                                          SYMBOLS   30
     * 6HDELTT1,                                                        SYMBOLS   31
     A 6HDELTT2,                                                        SYMBOLS   32
     B 6HEPSRPM,                                                        SYMBOLS   33
     C 6HDTHROT,                                                        SYMBOLS   34
     D 6HDAREA ,                                                        SYMBOLS   35
     E 6HFMS1  ,                                                        SYMBOLS   36
     F 6HFMS2  ,                                                        SYMBOLS   37
     G 6HFMFS1 ,                                                        SYMBOLS   38
     H 6HFMFS2 ,                                                        SYMBOLS   39
     I 6HTHRERR/                                                        SYMBOLS   40
      DATA (DSYMB(I),I=31,40)/                                          SYMBOLS   41
     * 6HFULERR,                                                        SYMBOLS   42
     A 6HXHSERR,                                                        SYMBOLS   43
     B 6HXLSERR,                                                        SYMBOLS   44
     C 6HPT6ERR,                                                        SYMBOLS   45
     D 6HPTDERR,                                                        SYMBOLS   46
     E 6H      ,                                                        SYMBOLS   47
     F 6H      ,                                                        SYMBOLS   48
     G 6H      ,                                                        SYMBOLS   49
     H 6H      ,                                                        SYMBOLS   50
     I 6H      /                                                        SYMBOLS   51
      DATA (DSYMB(I),I=41,50)/                                          SYMBOLS   52
     A 6H      ,                                                        SYMBOLS   53
     B 6H      ,                                                        SYMBOLS   54
     C 6H      ,                                                        SYMBOLS   55
     D 6H      ,                                                        SYMBOLS   56
     E 6H      ,                                                        SYMBOLS   57
     F 6H      ,                                                        SYMBOLS   58
```

```
      G 6H      ,                                                  SYMBOLS   59
      H 6H      ,                                                  SYMBOLS   60
      I 6H      ,                                                  SYMBOLS   61
      J 6H      /                                                  SYMBOLS   62
       DATA (CSYMB(I),I=1 ,10)/                                    SYMBOLS   63
      A 6HSTART ,                                                  SYMBOLS   64
      B 6HCH(1) ,                                                  SYMBOLS   65
      C 6HCH(2) ,                                                  SYMBOLS   66
      D 6HCH(3) ,                                                  SYMBOLS   67
      E 6HCH(4) ,                                                  SYMBOLS   68
      F 6HCH(5) ,                                                  SYMBOLS   69
      G 6HCH(6) ,                                                  SYMBOLS   70
      H 6HCH(7) ,                                                  SYMBOLS   71
      I 6HCH(8) ,                                                  SYMBOLS   72
      J 6HDLINK1/                                                  SYMBOLS   73
       DATA (CSYMB(I),I=11,20)/                                    SYMBOLS   74
      A 6HAL0   ,                                                  SYMBOLS   75
      B 6HAL1   ,                                                  SYMBOLS   76
      C 6HAL2   ,                                                  SYMBOLS   77
      D 6HBPOT0 ,                                                  SYMBOLS   78
      E 6HBPOT1 ,                                                  SYMBOLS   79
      F 6HDLINK2,                                                  SYMBOLS   80
      G 6HKTH   ,                                                  SYMBOLS   81
      H 6HALPHA ,                                                  SYMBOLS   82
      I 6HKAF   ,                                                  SYMBOLS   83
      J 6HCFCNTR/                                                  SYMBOLS   84
       DATA (CSYMB(I),I=21,30)/                                    SYMBOLS   85
      A 6HZETA  ,                                                  SYMBOLS   86
      B 6HOM    ,                                                  SYMBOLS   87
      C 6HOMN   ,                                                  SYMBOLS   88
      D 6HSIG   ,                                                  SYMBOLS   89
      E 6HDT    ,                                                  SYMBOLS   90
      F 6HCLAG  ,                                                  SYMBOLS   91
      G 6HCLAGD ,                                                  SYMBOLS   92
      H 6HCLAGG ,                                                  SYMBOLS   93
      I 6HCF    ,                                                  SYMBOLS   94
      J 6HAFL   /                                                  SYMBOLS   95
       DATA (CSYMB(I),I=31,40)/                                    SYMBOLS   96
      A 6HCHL   ,                                                  SYMBOLS   97
      B 6HFLAG  ,                                                  SYMBOLS   98
      C 6HFLAGD ,                                                  SYMBOLS   99
      D 6HFLAGG ,                                                  SYMBOLS  100
      E 6HTLAG  ,                                                  SYMBOLS  101
      F 6HTLAGD ,                                                  SYMBOLS  102
      G 6HTLAGG ,                                                  SYMBOLS  103
      H 6HTGAIN ,                                                  SYMBOLS  104
      I 6HDLAG  ,                                                  SYMBOLS  105
      J 6HDLAGD /                                                  SYMBOLS  106
       DATA (CSYMB(I),I=41,51)/                                    SYMBOLS  107
      * 6HDLAGG ,                                                  SYMBOLS  108
      A 6HDGAIN ,                                                  SYMBOLS  109
      B 6HKA1   ,                                                  SYMBOLS  110
      C 6HKA2   ,                                                  SYMBOLS  111
      D 6HENGNO ,                                                  SYMBOLS  112
      E 6HEPSRIS,                                                  SYMBOLS  113
      * 6HKFSF  ,                                                  SYMBOLS  114
      * 6HKFBIAS,                                                  SYMBOLS  115
```

```
     * 6HBIT   ,                                                  SYMBOLS  116
     F 6HPTDBIS,                                                  SYMBOLS  117
     G.6HPT6BIS/                                                  SYMBOLS  118
      DATA (CSYMB(I),I=52,61)/                                    SYMBOLS  119
     H 6HXNLBIS,                                                  SYMBOLS  120
     I 6HNM    ,                                                  SYMBOLS  121
     J 6HNP    ,                                                  SYMBOLS  122
     A 6HNF    ,                                                  SYMBOLS  123
     B 6HNDP   ,                                                  SYMBOLS  124
     C 6HNFIRST,                                                  SYMBOLS  125
     D 6HNINC  ,                                                  SYMBOLS  126
     E 6HSPRINT,                                                  SYMBOLS  127
     F 6HCPRNT ,                                                  SYMBOLS  128
     G 6HPARM1 /                                                  SYMBOLS  129
      DATA (CSYMB(I),I=62,71)/                                    SYMBOLS  130
     H 6HPARM2 ,                                                  SYMBOLS  131
     I 6HPARM3 ,                                                  SYMBOLS  132
     J 6HPARM4 ,                                                  SYMBOLS  133
     A 6HPARM5 ,                                                  SYMBOLS  134
     B 6HPARM6 ,                                                  SYMBOLS  135
     C 6HPARM7 ,                                                  SYMBOLS  136
     D 6HPARM8 ,                                                  SYMBOLS  137
     E 6HPARM9 ,                                                  SYMBOLS  138
     F 6HPARM10,                                                  SYMBOLS  139
     G 6HPARM11/                                                  SYMBOLS  140
      DATA (CSYMB(I),I=72,81)/                                    SYMBOLS  141
     H 6HPARM12,                                                  SYMBOLS  142
     I 6HPARM13,                                                  SYMBOLS  143
     J 6HPARM14,                                                  SYMBOLS  144
     A 6HPARM15,                                                  SYMBOLS  145
     B 6HPARM16,                                                  SYMBOLS  146
     C 6HPARM17,                                                  SYMBOLS  147
     D 6HPARM18,                                                  SYMBOLS  148
     E 6HPARM19,                                                  SYMBOLS  149
     F 6HPARM20,                                                  SYMBOLS  150
     G 6HERR1  /                                                  SYMBOLS  151
      DATA (CSYMB(I),I=82,91)/                                    SYMBOLS  152
     H 6HERR2  ,                                                  SYMBOLS  153
     I 6HERR3  ,                                                  SYMBOLS  154
     J 6HERR4  ,                                                  SYMBOLS  155
     A 6HERR5  ,                                                  SYMBOLS  156
     B 6HERR6  ,                                                  SYMBOLS  157
     C 6HFACT1 ,                                                  SYMBOLS  158
     D 6HFACT2 ,                                                  SYMBOLS  159
     E 6HFACT3 ,                                                  SYMBOLS  160
     F 6HFACT4 ,                                                  SYMBOLS  161
     G 6HFACT5 /                                                  SYMBOLS  162
      DATA (CSYMB(I),I=92,101)/                                   SYMBOLS  163
     H 6HFACT6 ,                                                  SYMBOLS  164
     I 6HNSIG  ,                                                  SYMBOLS  165
     J 6HEPS   ,                                                  SYMBOLS  166
     A 6HDELTA ,                                                  SYMBOLS  167
     B 6HMAXFN ,                                                  SYMBOLS  168
     C 6HIOPT  ,                                                  SYMBOLS  169
     D 6HPARMQ1,                                                  SYMBOLS  170
     E 6HPARMQ2,                                                  SYMBOLS  171
     F 6HPARMQ3,                                                  SYMBOLS  172
```

```
      SUBROUTINE RDATA                                                  JUN15     6
C                                                                       JUN15     7
C ***SUBROUTINE TO READ FLIGHT DATA***                                  JUN15     8
C                                                                       JUN15     9
      LEVEL 2,XDATA                                                     JUN15    10
      COMMON /DATA/XDATA(10,1)                                          JUN15    11
C                                                                       JUN15    12
      COMMON /CONSTS/ START,CH(8),                                      JUN15    13
     A DLINK1,AL0 , AL1 , AL2 , BPOT0 ,                                 JUN15    14
     B BPOT1 , DLINK2 , KTH , ALPHA , KAF ,                             JUN15    15
     C CFCNTR , ZETA , DM , OMN , SIG , DT ,                            JUN15    16
     D CLAG , CLAGD , CLAGG  , CF ,                                     JUN15    17
     E AFL , CHL , FLAG , FLAGD , FLAGG ,                               JUN15    18
     F TLAG , TLAGD , TLAGG  , TGAIN ,                                  JUN15    19
     G DLAG , DLAGD , DLAGG  , DGAIN ,                                  JUN15    20
     H KA1 , KA2 , ENGNO , EPSBIS ,                                     JUN15    21
     I KFSF , KFBIAS , BIT                                              JUN15    22
      COMMON /CONSTS/                                                   JUN15    23
     A PTDBIS , PT6BIS , XNLBIS ,                                       JUN15    24
     B NM,NP,NF,NDP,NFIRST,NINC,SPRINT,CPRNT,                           JUN15    25
     C IPARM(20),ERRPNT(6),R(6),NSIG,                                   JUN15    26
     D EPS , DELTA , MAXFN , IOPT , PARMMQ(4) ,                         JUN15    27
     E FILENO , STIME , FLGTNO , HUNDEL , HUNDPO ,                      JUN15    28
     F HUNMFF , HUNNH , HUNNL , HUNPT6 , HUNPTD                         JUN15    29
C                                                                       JUN15    30
C                                                                       JUN15    31
      DIMENSION DUM(20,50)                                              JUN15    32
C                                                                       JUN15    33
C ***INITIALIZE COUNTERS***                                             JUN15    34
C                                                                       JUN15    35
      STIMEF=0.0                                                        JUN17A    8
      GO=0.0                                                            JUN15    36
      IF(STIME.EQ.-999.) GO=1.0                                         JUN15    37
      N=0                                                               JUN15    38
      IND=(ENGNO-1.0)*10.                                               JUN15    39
C                                                                       JUN15    40
C ***START READ LOOP***                                                 JUN15    41
C                                                                       JUN15    42
   10 CONTINUE                                                          JUN15    43
      READ(2) DUM                                                       JUN15    44
      IF( EOF(2).NE.0. )  GO TO 20                                      JUN15    45
C                                                                       JUN15    46
      DO 1 I=1,50                                                       JUN15    47
C                                                                       JUN15    48
      IF(STIME.EQ.DUM(1,I)) GO=1.0                                      JUN15    49
      IF(GO.EQ.0.0) GO TO 1                                             JUN15    50
C                                                                       JUN17A    9
      IF(STIMEF.EQ.0.0) STIME=DUM(1,I)                                  JUN17A   10
      STIMEF=1.0                                                        JUN17A   11
C                                                                       JUN15    51
      N=N+1                                                             JUN15    52
      DO 2 J=1,10                                                       JUN15    53
      XDATA(J,N)=DUM(J+IND,I)                                           JUN15    54
    2 CONTINUE                                                          JUN15    55
C                                                                       JUN21A    1
C ***CORRECT SCALING PROBLEM ON N2***                                   JUN21A    2
C ***INPUT DATA SCALING ERROR***                                        JUN21A    3
```

ORIGINAL PAGE IS OF POOR QUALITY

```
C                                                                       JUN21A     4
      XDATA(5,N)=DUM(5,IND,I)*0.1                                       JUN21A     5
C                                                                       JUN21A     6
      XDATA(1,N)=XDATA(1,N)-STIME                                       JUN17A    12
C                                                                       JUN15     56
      IF(N.EQ.NDP) RETURN                                               JUN15     57
C                                                                       JUN15     58
    1 CONTINUE                                                          JUN15     59
      GO TO 10                                                          JUN15     60
C                                                                       JUN15     61
   20 NDP=N                                                             JUN15     62
      IF(NDP.NE.0) RETURN                                               JUN27     30
      WRITE(6,100)                                                      JUN27     31
  100 FORMAT(10X,12HNO DATA READ)                                       JUN27     32
      RETURN                                                            JUN15     63
      END                                                               RDATA      4
```

```
      SUBROUTINE PLOT(P)                                                PLOT      2
C                                                                       PLOT      3
      COMMON /CONSTS/ START,CH(8),                                      PLOT      4
     A DLINK1,AL0 , AL1 , AL2 , BPOT0 ,                                 PLOT      5
     B BPOT1 , DLINK2 , KTH , ALPHA , KAF ,                             PLOT      6
     C CFCNTR , ZETA , OM , OMN , SIG , DT ,                            PLOT      7
     D CLAG , CLAGD , CLAGG  , CF ,                                     PLOT      8
     E AFL , CHL , FLAG , FLAGD , FLAGG ,                               PLOT      9
     F TLAG , TLAGD , TLAGG  , TGAIN ,                                  PLOT     10
     G DLAG , DLAGD , DLAGG  , DGAIN ,                                  PLOT     11
     H KA1 , KA2 , ENGND , EPSBIS ,                                     PLOT     12
     I KFSF , KFBIAS , HIT                                              PLOT     13
      COMMON /CONSTS/                                                   PLOT     14
     A PTDBIS , PT6BIS , XNLBIS ,                                       PLOT     15
     B NM,NP,NF,NDP,NFIRST,NINC,SPRINT,CPRNT,                           PLOT     16
     C IPARM(20),ERRPNT(6),R(6),NSIG,                                   PLOT     17
     D EPS , DELTA , MAXFN , IOPT , PARMMQ(4) ,                         PLOT     18
     E FILENO , STIME , FLGTNO , HUNDEL , HUNDPO ,                      PLOT     19
     F HUNMFF , HUNNH , HUNNL , HUNPT6 , HUNPTD                         PLOT     20
C                                                                       PLOT     21
      COMMON /PLOTS/CPLOT,PLOTF,IND1,A(200,7),IMAG4(5151),PDATA(200,20) JUN15    64
C                                                                       PLOT     23
      DIMENSION P(1),F(10)                                              PLOT     24
C                                                                       PLOT     25
C ***TRANSFER MATRIX LABELS***                                          PLOT     26
C                                                                       PLOT     27
      DO 10 I=2,7                                                       JUN17     6
      DO 10 J=1,160                                                     JUN17     7
   10 A(J,I)=A(J,1)                                                     PLOT     30
C                                                                       JUN30    24
      DO 20 I=1,7                                                       JUN30    25
      DO 20 J=161,200                                                   JUN30    26
      IND=J-40                                                          JUN30    27
      A(IND,I)=A(J,I)                                                   JUN30    28
   20 CONTINUE                                                          JUN30    29
C                                                                       JUN30    30
C                                                                       PLOT     31
C ***GENERATE PLOT DATA***                                              PLOT     32
C                                                                       PLOT     33
      PLOTF=1.0                                                         PLOT     34
      IF(CPLOT.LT.0.0) PLOTF=-1.0                                       PLOT     35
      IND1=0                                                            PLOT     36
      SPRINT=ABS(CPLOT)                                                 PLOT     37
C                                                                       PLOT     38
      CALL FUNC(P,NP,NF,F)                                              PLOT     39
C                                                                       PLOT     40
C ***OUTPUT PLOTS***                                                    PLOT     41
C                                                                       PLOT     42
      CPLOT=ABS(CPLOT)                                                  PLOT     43
      NPOINT=NDP/CPLOT+1                                                PLOT     44
      IF(NPOINT.GT.200) NPOINT=200                                      JUL28    52
      CALL USPLH(PDATA(1,1),PDATA(1,2),NPOINT,1,1,200,A(1,1),IMAG4,IER) PLOT     46
C                                                                       PLOT     47
C                                                                       PLOT     48
      DO 1 I=1,6                                                        PLOT     49
C                                                                       PLOT     50
      CALL USPLH(PDATA(1,1),PDATA(1,2*I+1),NPOINT,                      PLOT     51
```


ORIGINAL PAGE IS OF POOR QUALITY

```
     *          2,1,200,A(1,I+1),IMAG4,IER)                          PLOT      52
C                                                                    PLOT      53
    1 CONTINUE                                                       PLOT      54
C                                                                    PLOT      55
C ***ADDITIONAL PLOT CODE***                                         PLOT      56
C                                                                    PLOT      57
      RETURN                                                         PLOT      58
      END                                                            PLOT      59
```

```
      BLOCK DATA PLABELS                                                PLABELS    2
      COMMON /PLOTS/CPLOT,PLOTF,INDI,A(200,7),IMAG4(5151),PDATA(200,20) JUN15     66
C                                                                       PLABELS    4
C                                                                       PLABELS    5
      DATA (A(I,1),I=1,80)/                                             JUN15     67
     * 1HS,1HP,1HE,1HY,1H ,1HE,                                         PLABELS    7
     * 1HN,1HG,1HI,1HN,1HE,1H ,                                         PLABELS    8
     * 1HI,1HD,1HE,1HN,1HT,1HI,                                         PLABELS    9
     * 1HF,1HI,1HC,1HA,1HT,1HI,                                         PLABELS   10
     * 1HO,1HN,1H ,1HP,1HR,1HO,                                         PLABELS   11
     * 1HG,1HR,1HA,1HM,1H-,1HS,                                         PLABELS   12
     * 1HY,1HS,1HT,1HE,1HM,1HS,                                         PLABELS   13
     * 1H ,                                                             PLABELS   14
     * 1HC,1HO,1HN,1HT,1HR,1HO,                                         PLABELS   15
     * 1HL,1H.,1HI,1HN,1HC,1H ,                                         PLABELS   16
     * 1H(,1HV,1HT,1H),1H-,1HA,                                         PLABELS   17
     * 1HW,1HJ,1HS,1HT,1HO,1HL,                                         PLABELS   18
     * 13*1H /                                                          JUN17      8
C                                                                       PLABELS   20
C                                                                       PLABELS   21
      DATA (A(I,1),I=81,160)/                                           JUN15     69
     * 1HT,1HI,1HM,1HE,1H ,1H ,                                         PLABELS   23
     * 1H(,1HS,1HE,1HC,1H),1H ,                                         PLABELS   24
     * 1H ,1H ,1H ,1H ,1H ,1H ,                                         PLABELS   25
     * 1H ,1H ,1H ,1H ,1H ,1H ,                                         PLABELS   26
     * 1H ,1H ,1H ,1H ,1H ,1H ,                                         PLABELS   27
     * 49*1H ,1H*/                                                      JUN17A    13
C                                                                       PLABELS   29
C                                                                       PLABELS   30
      DATA (A(I,1),I=161,200)/                                          JUN15     71
     * 1H ,1HT,1HH,1HR,1HO,1HT,                                         PLABELS   32
     * 1HT,1HL,1HE,1H ,1HC,1HO,                                         PLABELS   33
     * 1HM,1HM,1HA,1HN,1HD,1H ,                                         PLABELS   34
     * 1HI,1HN,1HP,1HU,1HT,1H ,                                         PLABELS   35
     * 1H*,1HD,1HE,1HG,1H*,1H ,                                         PLABELS   36
     * 10*1H /                                                          JUN15     72
C                                                                       PLABELS   38
      DATA (A(I,2),I=161,200)/                                          JUN15     73
     * 1HT,1HH,1HR,1HO,1HT,1HT,                                         PLABELS   40
     * 1HL,1HE,1H ,1HP,1HI,1HC,                                         PLABELS   41
     * 1HK,1HO,1HF,1HF,1H ,1H*,                                         PLABELS   42
     * 1HC,1HO,1HU,1HN,1HT,1HS,                                         PLABELS   43
     * 1H*,1H ,1H ,1H ,1H ,1H ,                                         PLABELS   44
     * 10*1H /                                                          JUN15     74
C                                                                       PLABELS   46
      DATA (A(I,3),I=161,200)/                                          JUN15     75
     * 1HF,1HU,1HE,1HL,1H ,1HF,                                         PLABELS   48
     * 1HL,1HO,1HW,1H ,1HO,1HU,                                         PLABELS   49
     * 1HT,1HP,1HU,1HT,1H ,1H ,                                         PLABELS   50
     * 1H*,1HP,1HE,1HR,1H ,1HC,                                         PLABELS   51
     * 1HE,1HN,1HT,1H*,1H ,1H ,                                         PLABELS   52
     * 10*1H /                                                          JUN15     76
C                                                                       PLABELS   54
      DATA (A(I,4),I=161,200)/                                          JUN15     77
     * 1HC,1HO,1HM,1HP,1HR,1HE,                                         PLABELS   56
     * 1HS,1HS,1HO,1HR,1H ,1HS,                                         PLABELS   57
     * 1HP,1HE,1HE,1HD,1H ,1H ,                                         PLABELS   58
```

```
      * 1H*,1HP,1HE,1HR,1H ,1HC,                                  PLABELS    59
      * 1HE,1HN,1HT,1H*,1H ,1H ,                                  PLABELS    60
      * 10*1H /                                                   JUN15      78
C                                                                 PLABELS    62
      DATA (A(I,5),I=161,200)/                                    JUN15      79
      * 1HF,1HA,1HN,1H ,1HS,1HP,                                  PLABELS    64
      * 1HE,1HE,1HD,1H ,1H*,1HP,                                  PLABELS    65
      * 1HE,1HR,1HC,1HE,1HN,1HT,                                  PLABELS    66
      * 1H*,1H ,1H ,1H ,1H ,1H ,                                  PLABELS    67
      * 1H ,1H ,1H ,1H ,1H ,1H ,                                  PLABELS    68
      * 10*1H /                                                   JUN15      80
C                                                                 PLABELS    70
      DATA (A(I,6),I=161,200)/                                    JUN15      81
      * 1HT,1HA,1HI,1HL,1HP,1HI,                                  PLABELS    72
      * 1HP,1HE,1H ,1HP,1HR,1HE,                                  PLABELS    73
      * 1HS,1HS,1HU,1HR,1HE,1H ,                                  PLABELS    74
      * 1H*,1HP,1HE,1HR,1H ,1HC,                                  PLABELS    75
      * 1HE,1HN,1HT,1H*,1H ,1H ,                                  PLABELS    76
      * 10*1H /                                                   JUN15      82
C                                                                 PLABELS    78
      DATA (A(I,7),I=161,200)/                                    JUN15      83
      * 1HD,1HU,1HC,1HT,1H ,1HP,                                  PLABELS    80
      * 1HR,1HE,1HS,1HS,1HU,1HR,                                  PLABELS    81
      * 1HE,1H ,1H*,1HP,1HE,1HR,                                  PLABELS    82
      * 1H ,1HC,1HE,1HN,1HT,1H*,                                  PLABELS    83
      * 1H ,1H ,1H ,1H ,1H ,1H ,                                  PLABELS    84
      * 10*1H /                                                   JUN15      84
C                                                                 PLABELS    86
      END                                                         PLABELS    87
```

```
      SUBROUTINE HYSTER(XIN,XOUT,DZ)                                    HYSTER     2
C                                                                       HYSTER     3
      XOUTL=XOUT                                                        HYSTER     4
      IF(XIN.GT.XOUTL+DZ) XOUT=XIN-DZ                                   HYSTER     5
      IF(XIN.LT.XOUTL-DZ) XOUT=XIN+DZ                                   HYSTER     6
C                                                                       HYSTER     7
      RETURN                                                            HYSTER     8
      END                                                               HYSTER     9
```


ORIGINAL PAGE IS
OF POOR QUALITY

APPENDIX B

FLIGHT TEST PLAN

1. Fly towards Crows Landing and climb to 7500 ft. Establish communication and telemetry with NASA2 as soon as possible. If unable to establish communication, start the throttle sweeps when 15 DME west of Crows Landing.

2. Establish the airplane in the STOL mode on a -7-1/2° flt path angle. Once stabilized at a speed of LAS + 5 kts proceed with the following matrix of throttle rate square waves.

SQUARE WAVE DURATION	AMPLITUDE			RECORD LENGTH
	TOTAL AMP	RATE	GNI	
5 sec	1.25°	1/2°/sec	10	30 sec
"	2.5°	1°/sec	20	"
"	5.0°	2°/sec	40	"
"	7.5°	3°/sec	60	"

4 to 5 min + climb

3. Climb back to 7500 ft. and proceed through the following matrix.

DURATION	GNJ	AMPLITUDE	GNI	RECORD LENGTH
10 sec	100	1/2°/sec	10	40 sec
"	"	1.5°sec	30	"

3 min + climb

4. Climb back to 7500 ft and do the following case:

DURATION	GNJ	AMPLITUDE	GNI	RECORD LENGTH
50 sec	500	.25°/sec	5	2 cycles

2 min + climb

5. Climb back to 7500 ft. and do the following doublets.

DURATION	AMPLITUDE			RECORD LENGTH
	GNJ		GNI	
10 sec	100	1°	20	30 sec
"	"	1-1/2°	30	"
"	"	2°	40	"
"	"	4°	80	"
"	"	7-1/2°	150	"

APPENDIX C

TIME HISTORY MATCHES FOR PARAMETER IDENTIFICATION RUNS

Figure C.1 Throttle Linkage Match - Record 1, Left Engine

Figure C.2 Throttle Linkage Match - Record 5, Left Engine

Figure C.3 Throttle Linkage Match - Record 1, Right Engine

Figure C.4 Throttle Linkage Match - Record 5, Right Engine

Figure C.5 Tailpipe/Duct Pressure Match - Record 1, Left Engine

Figure C.6 Tailpipe/Duct Pressure Match - Record 1, Right Engine

Figure C.7 Engine Parameter Estimation Match - Record 3, Right Engine

Figure C.8 Engine Parameter Estimation Match - Record 7, Right Engine

Figure C.9 Engine Parameter Estimation Match - Record 7, Left Engine

Figure C.10 Fuel Control Estimation Match - Record 3, Right Engine

Figure C.11 Fuel Control Estimation Match - Record 7, Right Engine

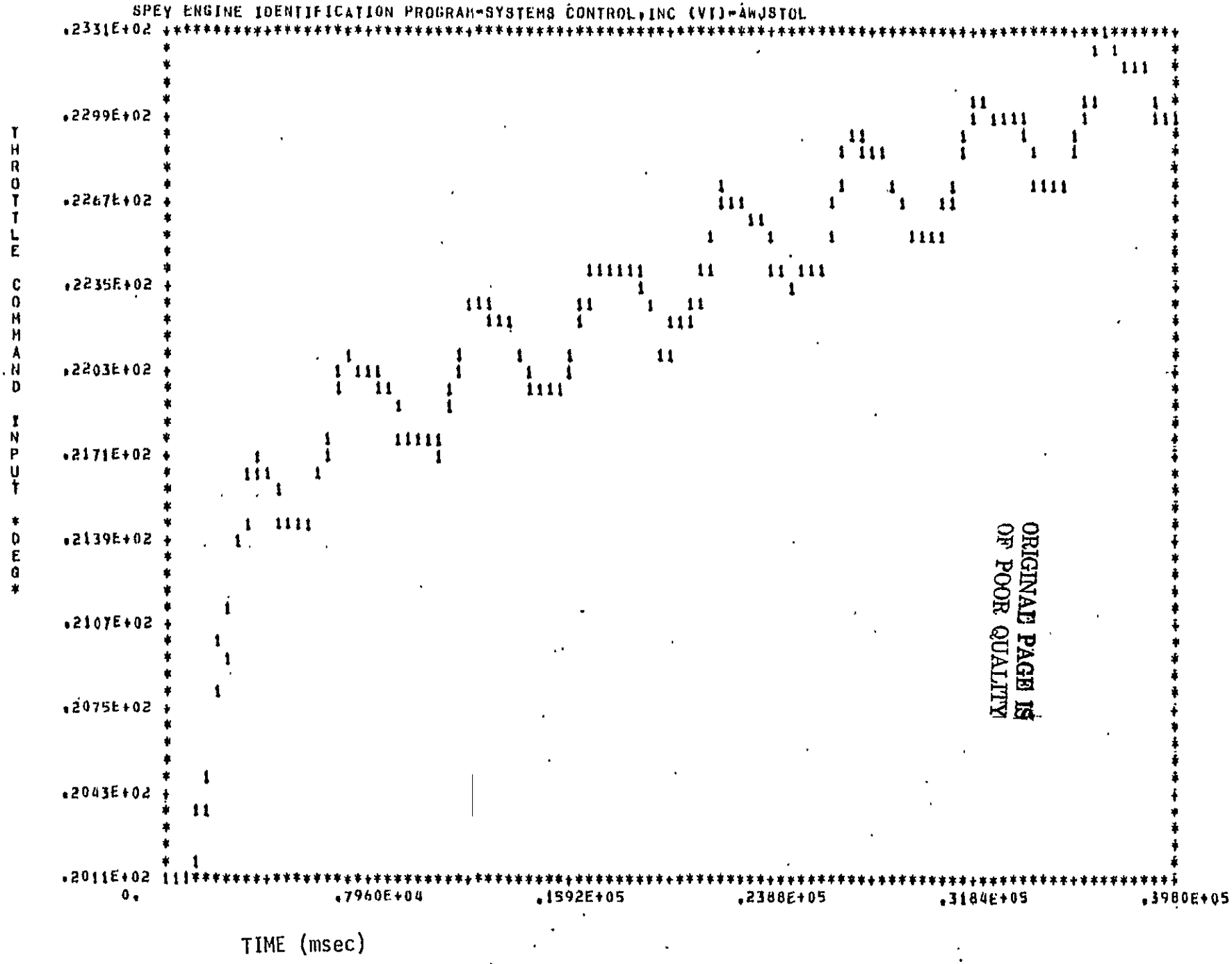

ORIGINAL PAGE IS
OF POOR QUALITY

Figure C.1 Throttle Linkage Match - Record 1, Left Engine

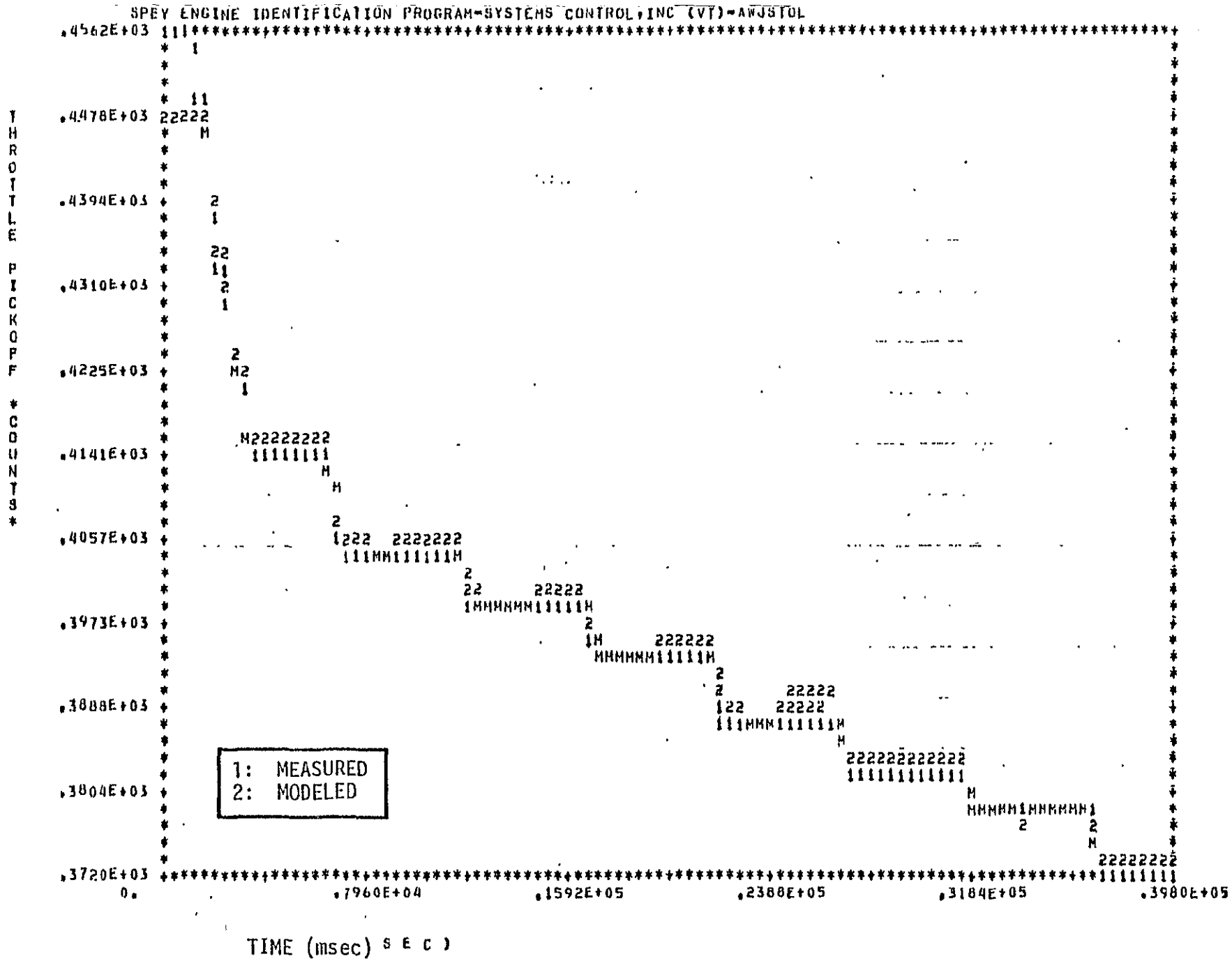

Figure C.1 (Concluded)

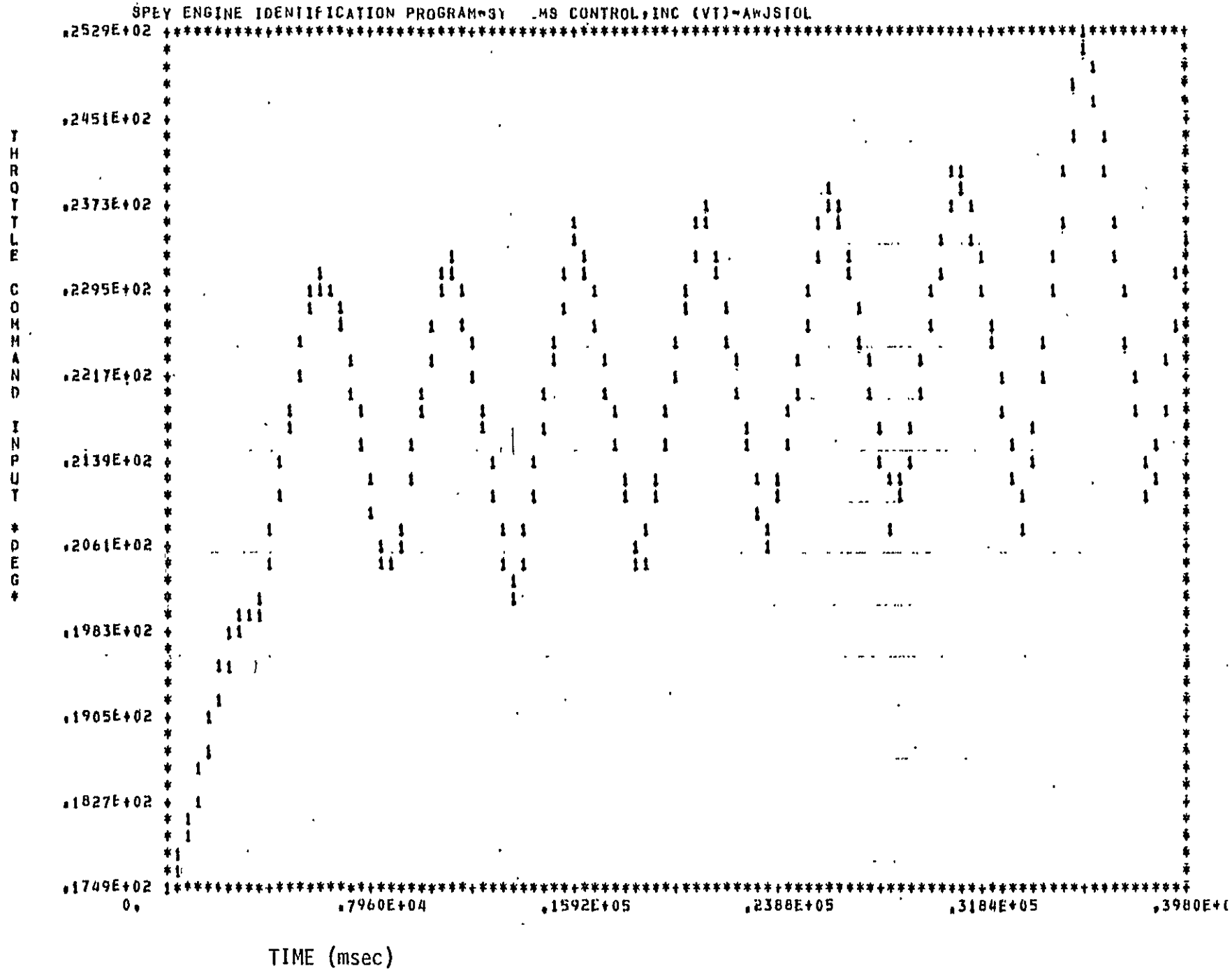

Figure C.2 Throttle Linkage Match - Record 5, Left Engine

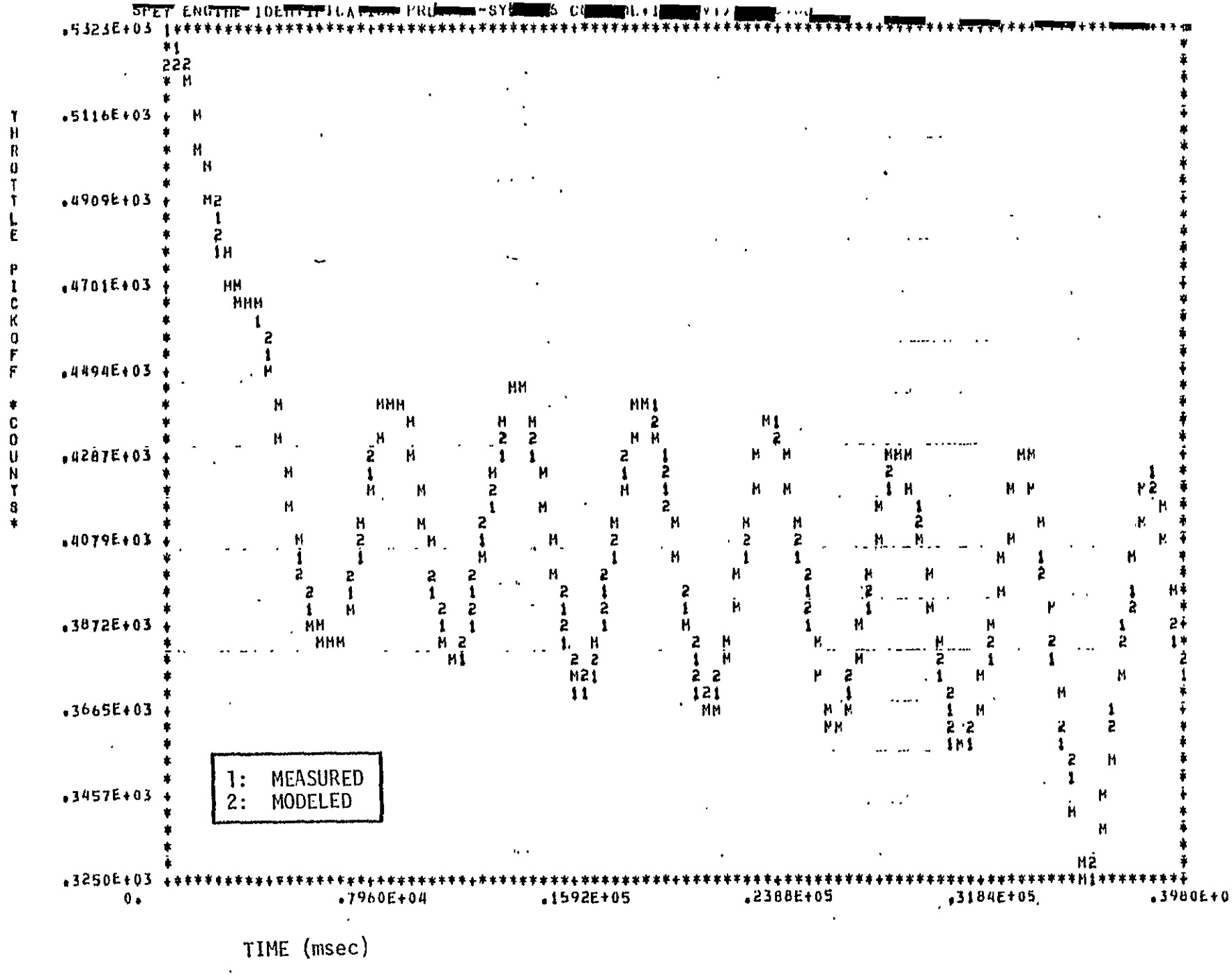

Figure C.2 (Concluded)

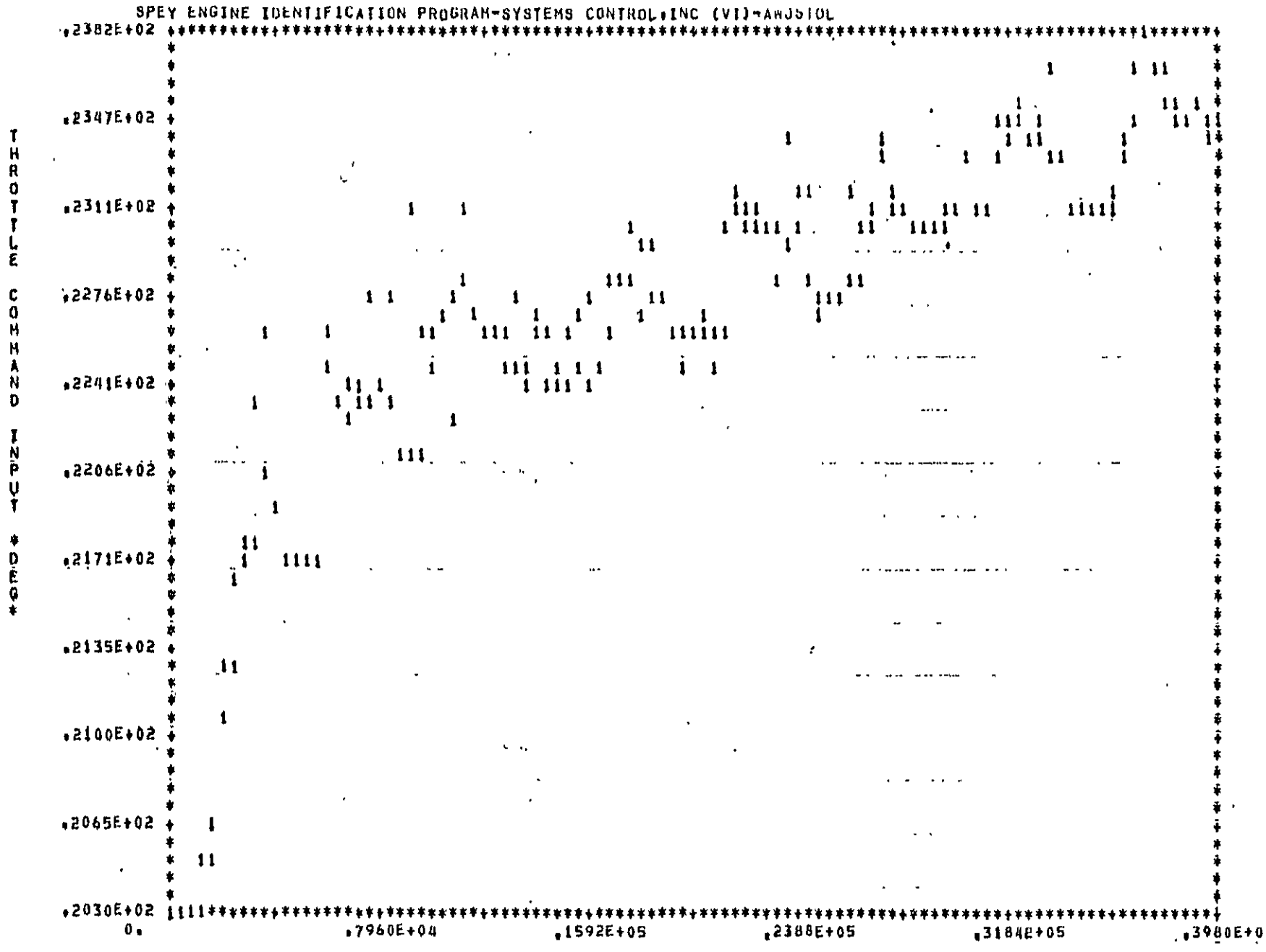

TIME (msec)

Figure C.3 Throttle Linkage Match - Record 1, Right Engine

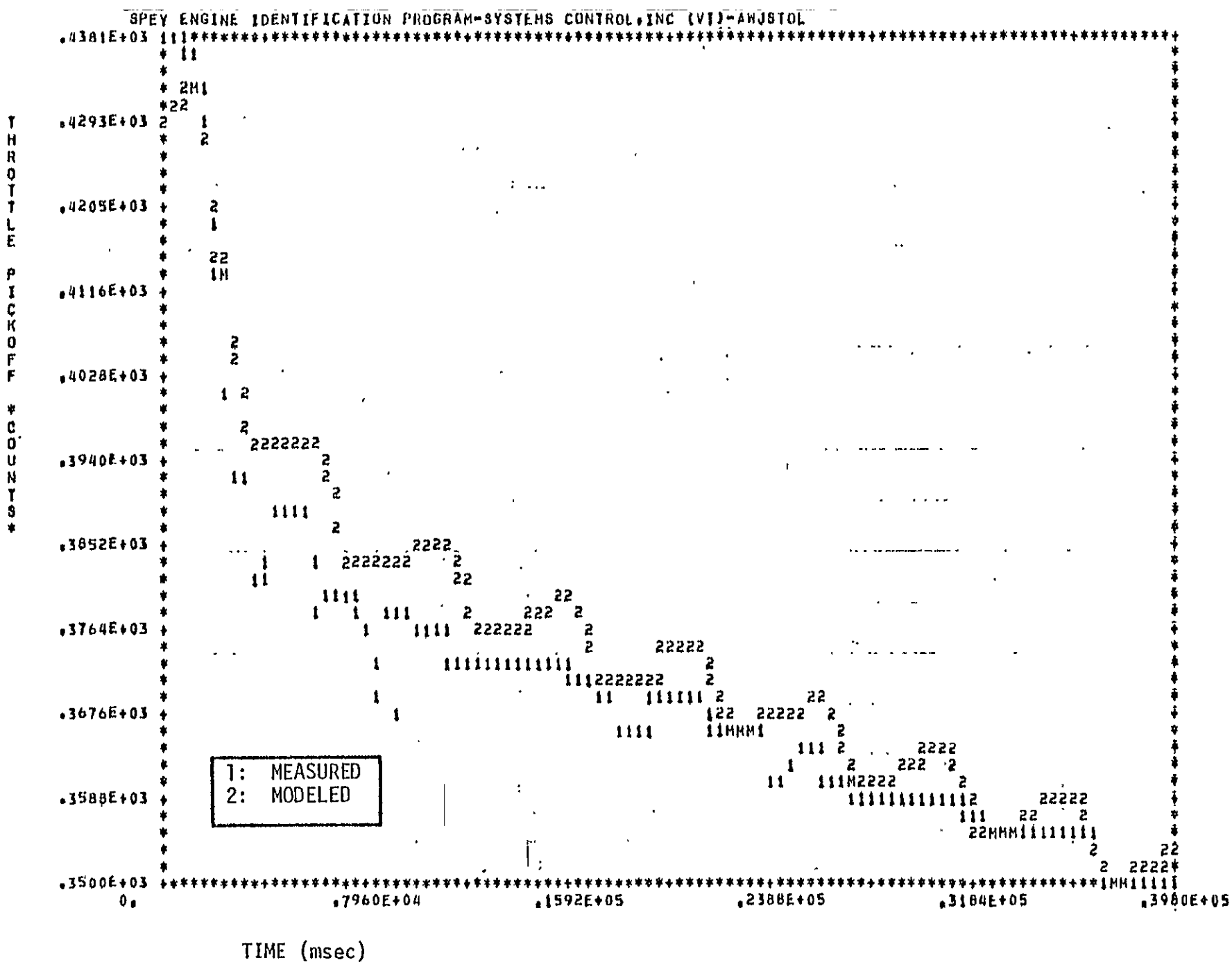

Figure C.3 (Concluded)

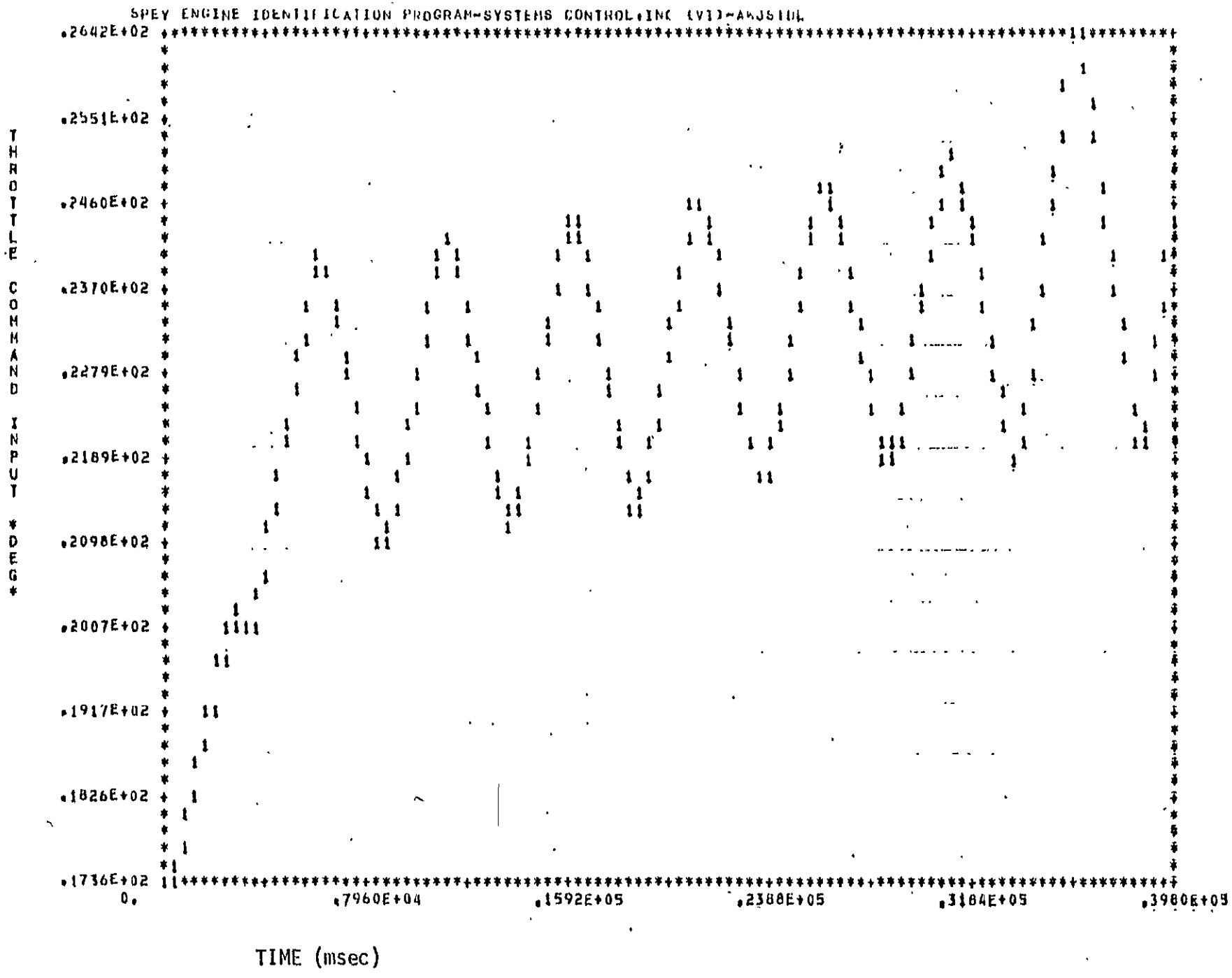

Figure C.4 Throttle Linkage Match - Record 5, Right Engine

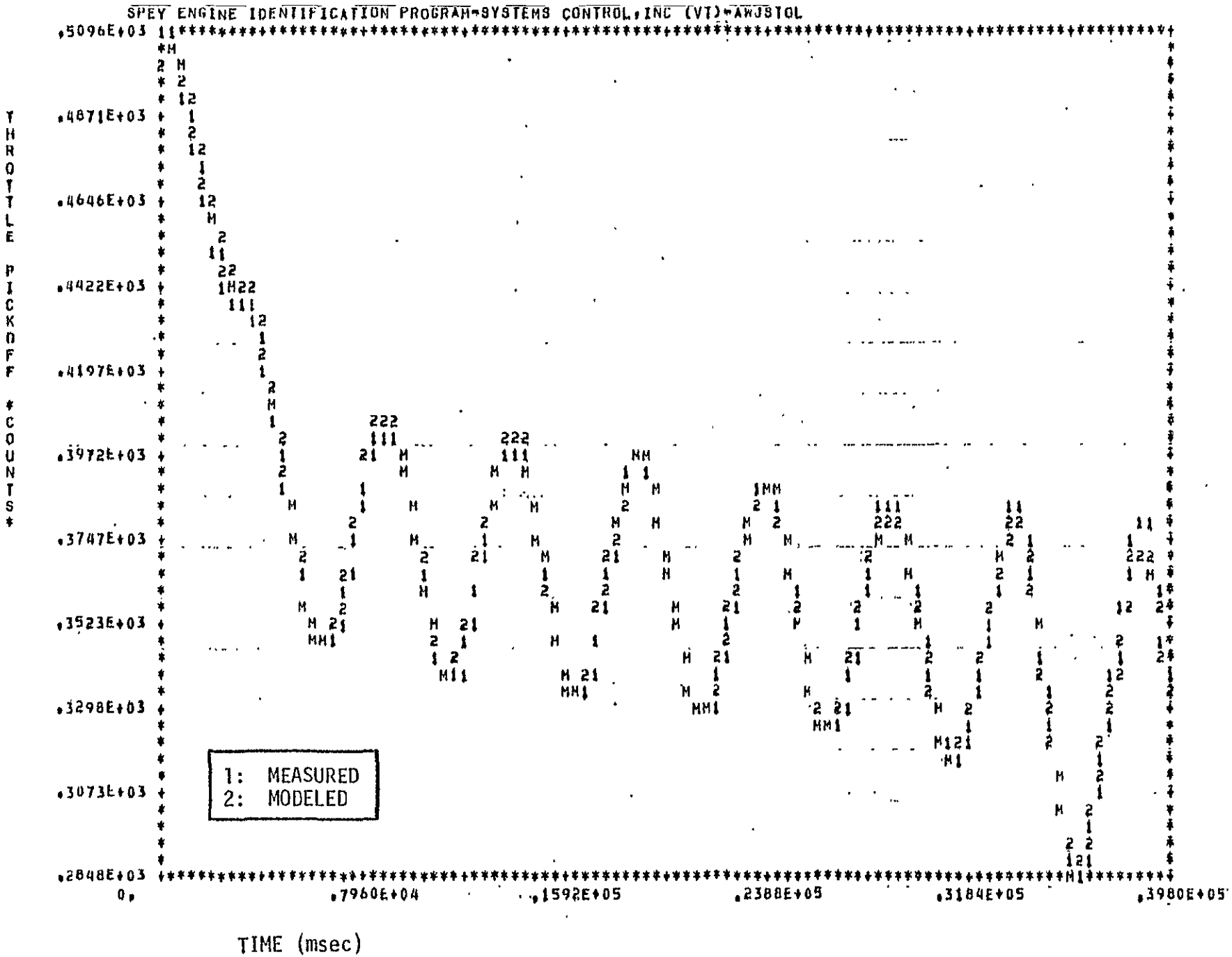

Figure C.4 (Concluded)

ORIGINAL PAGE IS
OF POOR QUALITY

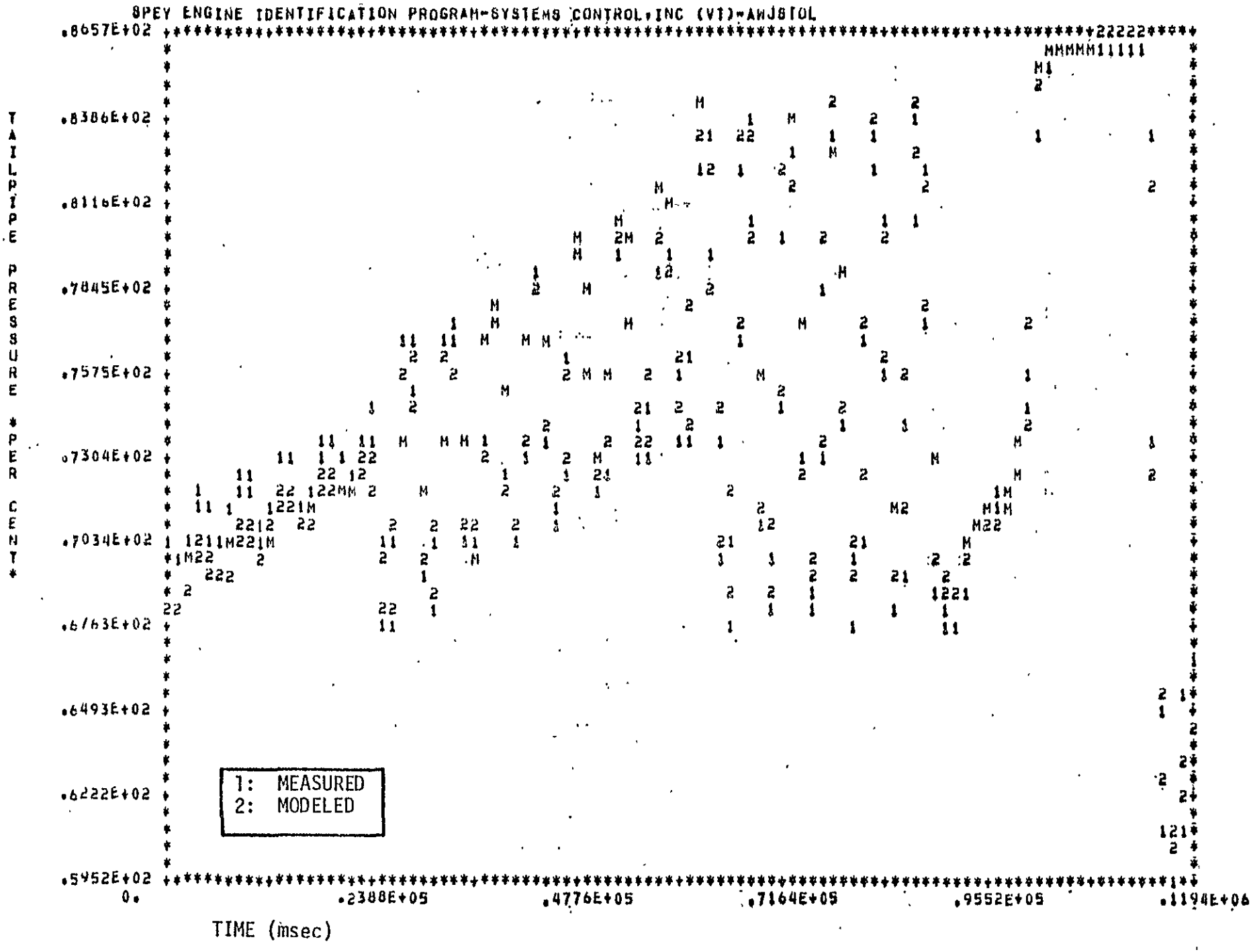

Figure C.5 Tailpipe/Duct Pressure Match - Record 1, Left Engine

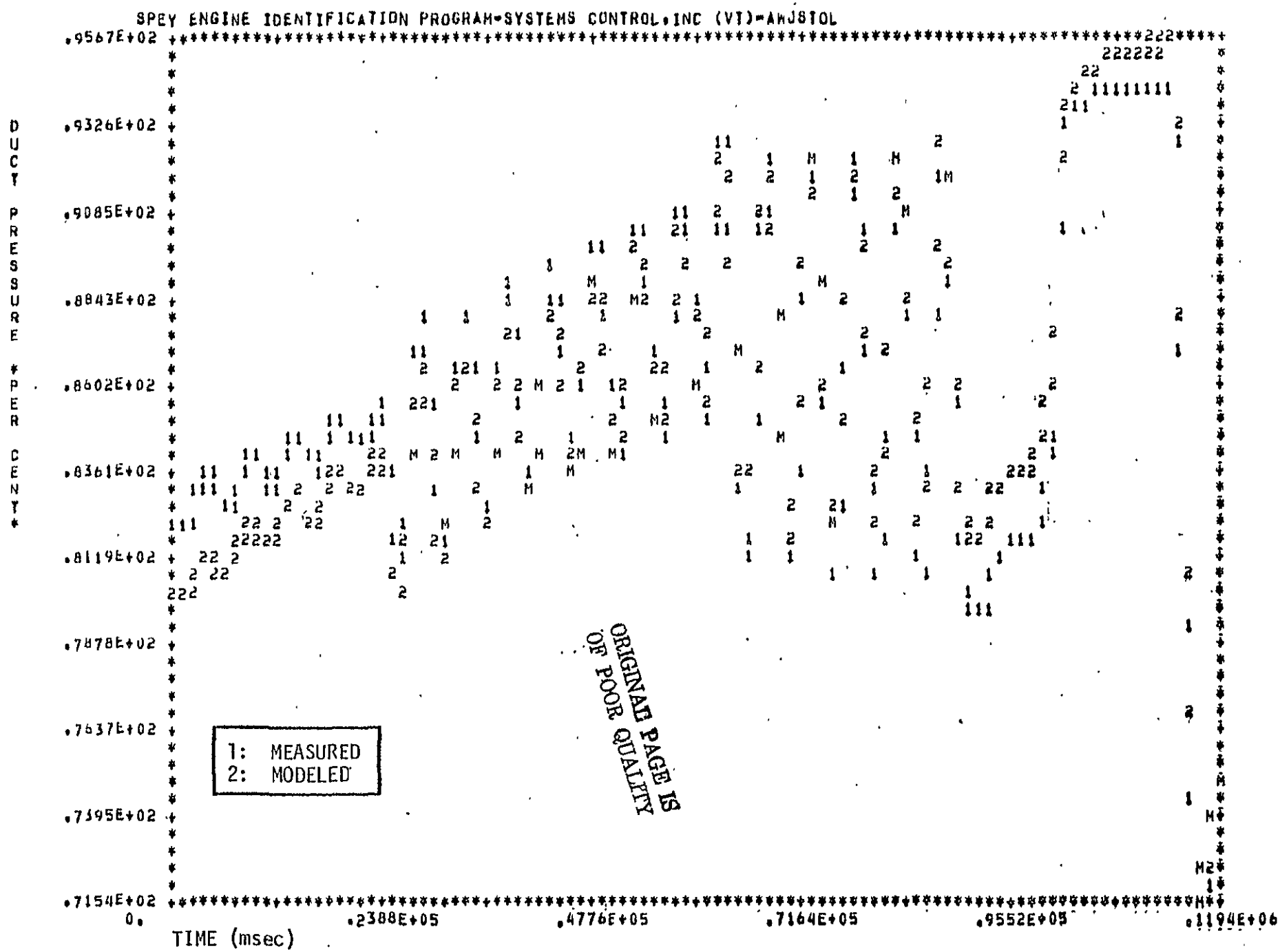

ORIGINAL PAGE IS OF POOR QUALITY

Figure C.5 (Concluded)

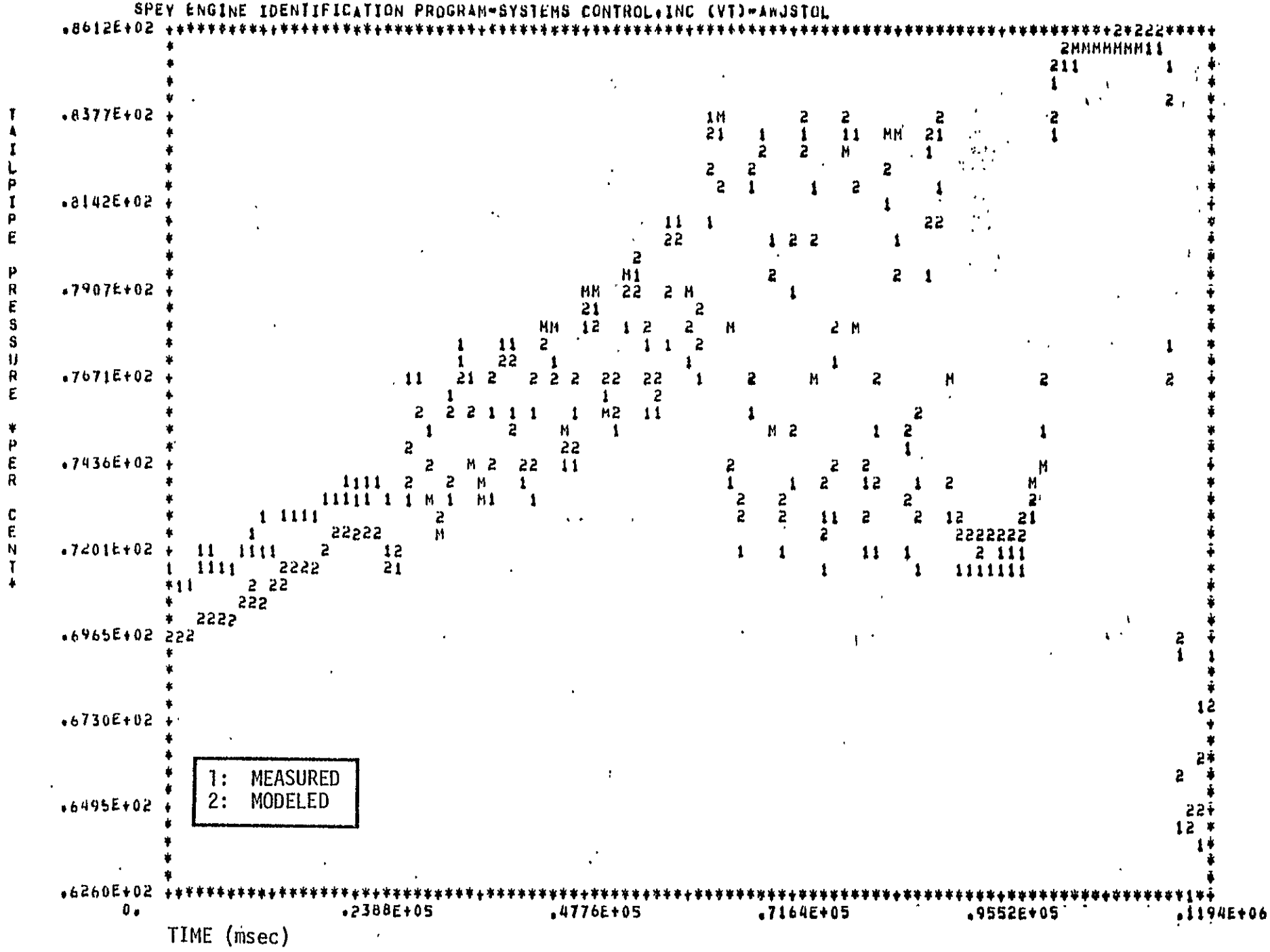

Figure C.6 Tailpipe/Duct Pressure Match - Record 1. Right Engine

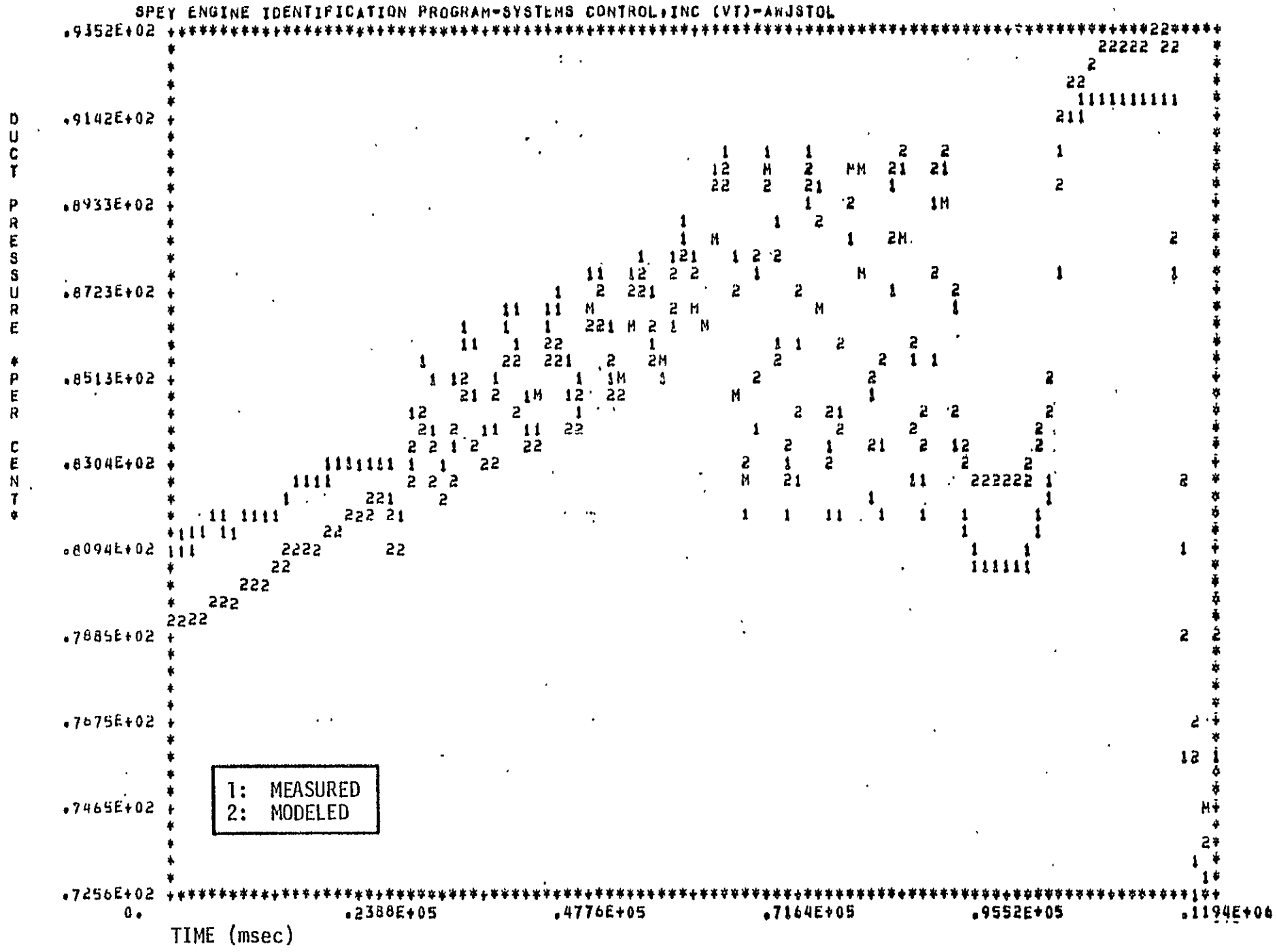

Figure C.6 (Concluded)

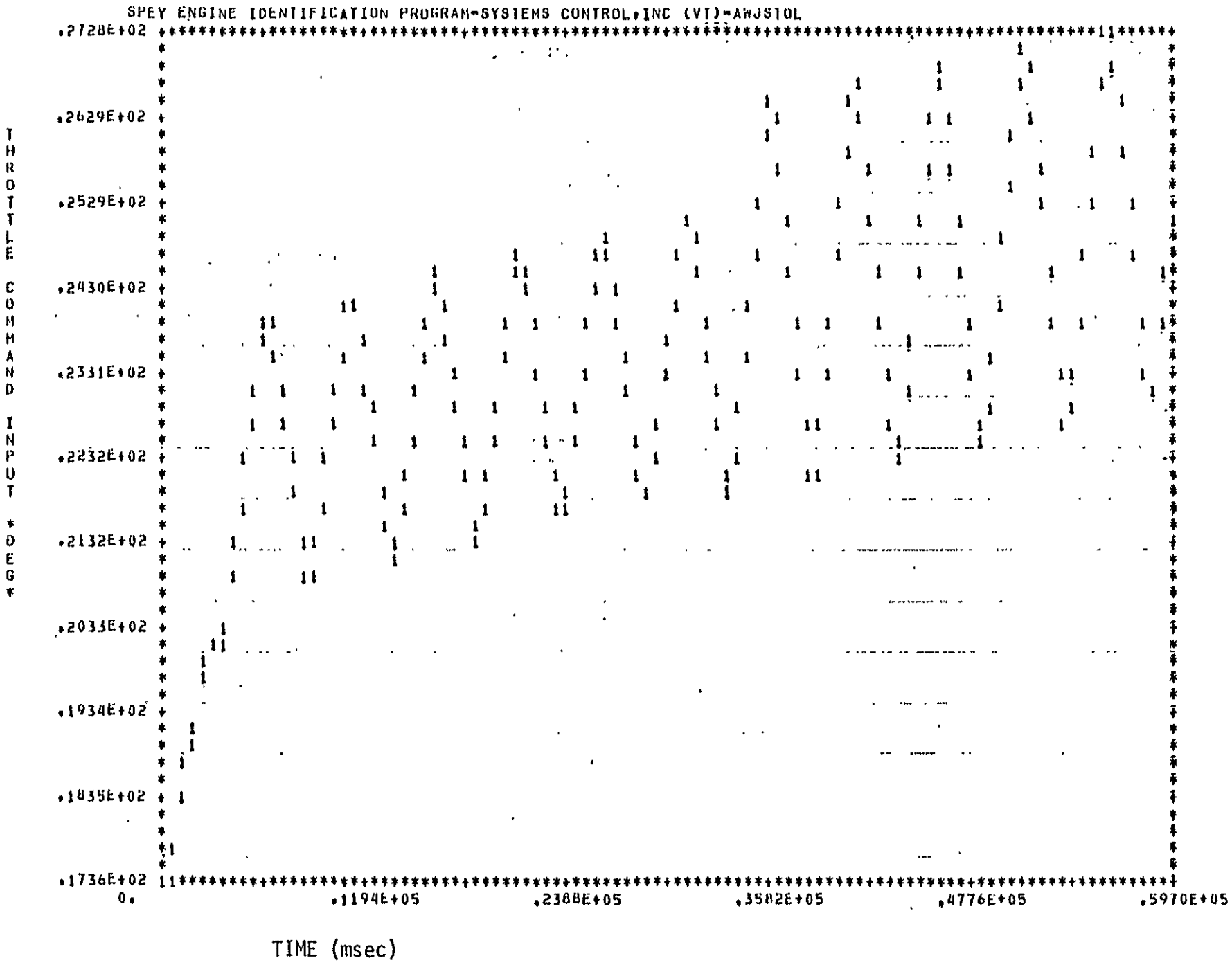

Figure C.7 Engine Parameter Estimation Match - Record 3, Right Engine

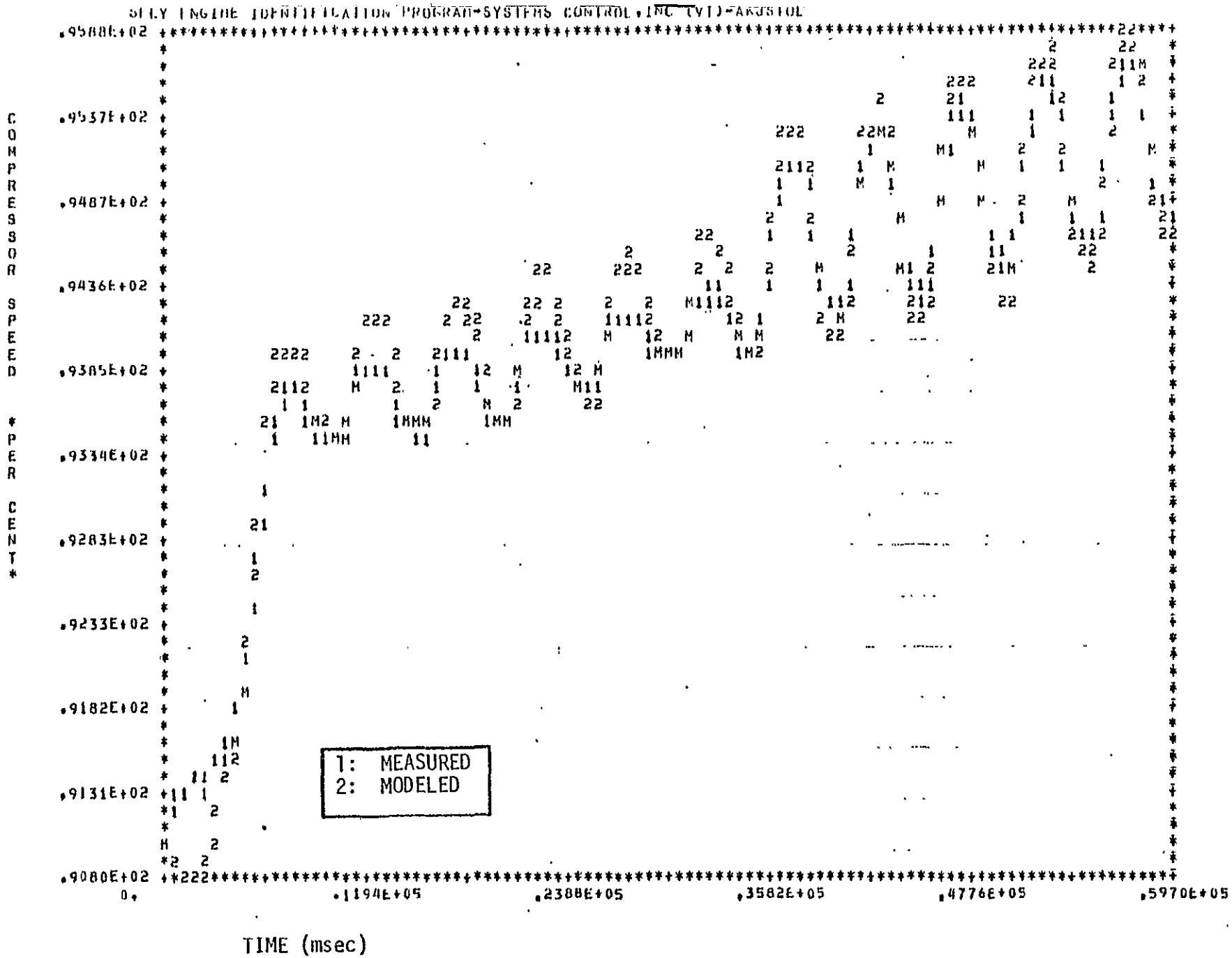

Figure C.7 (Continued)

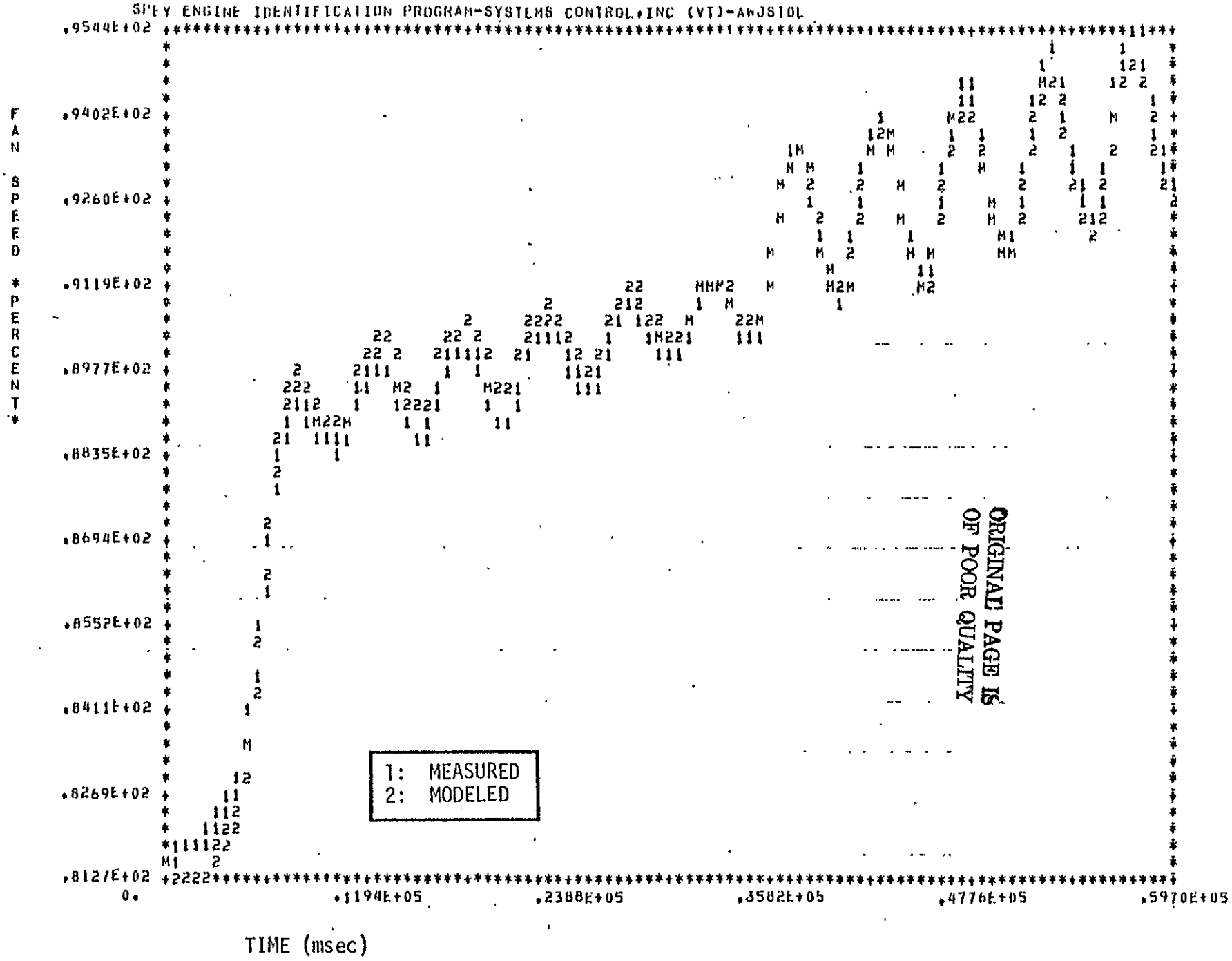

ORIGINAL PAGE IS
OF POOR QUALITY

Figure C.7 (Continued)

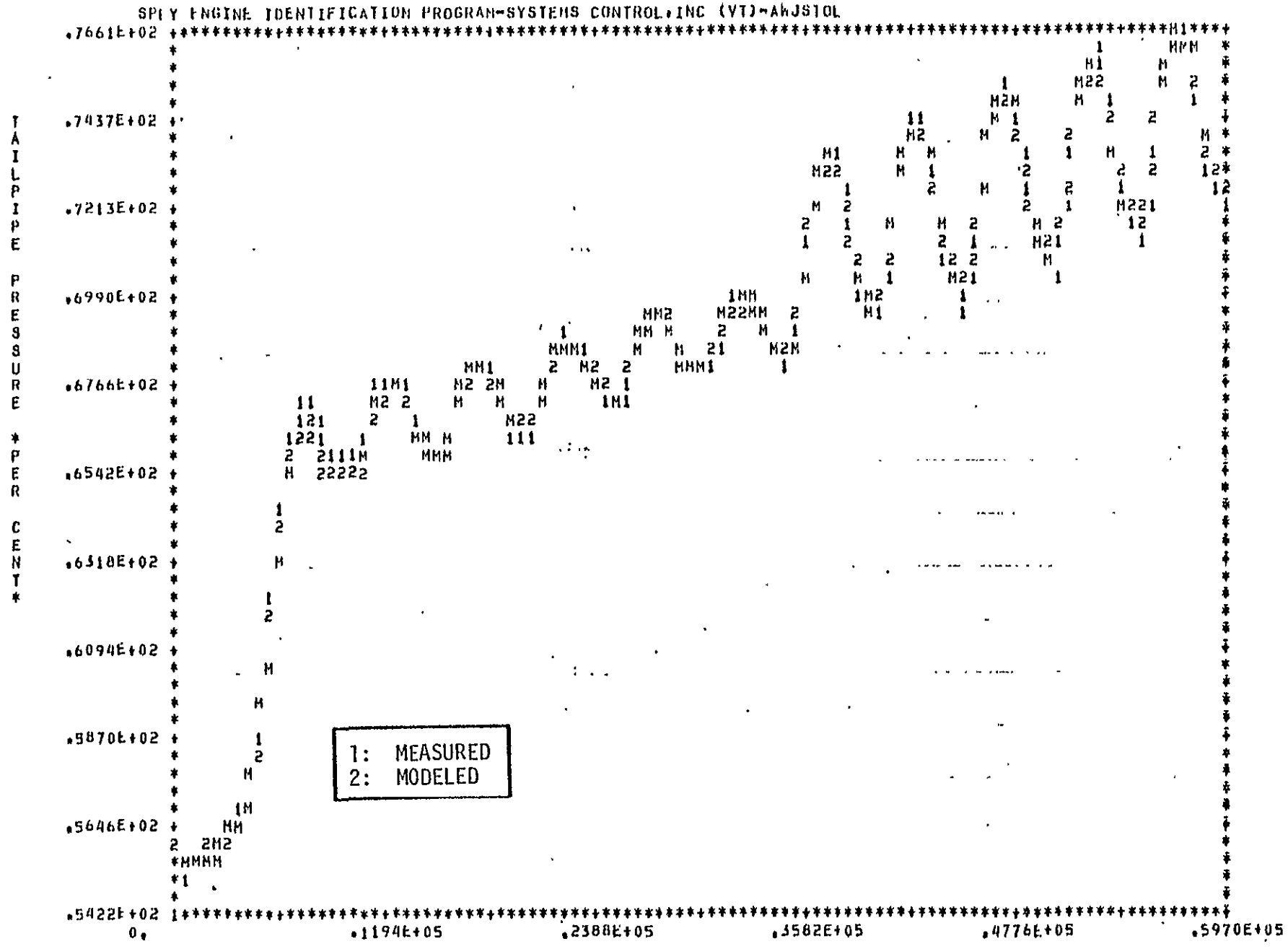

TIME (msec)

Figure C.7 (Continued)

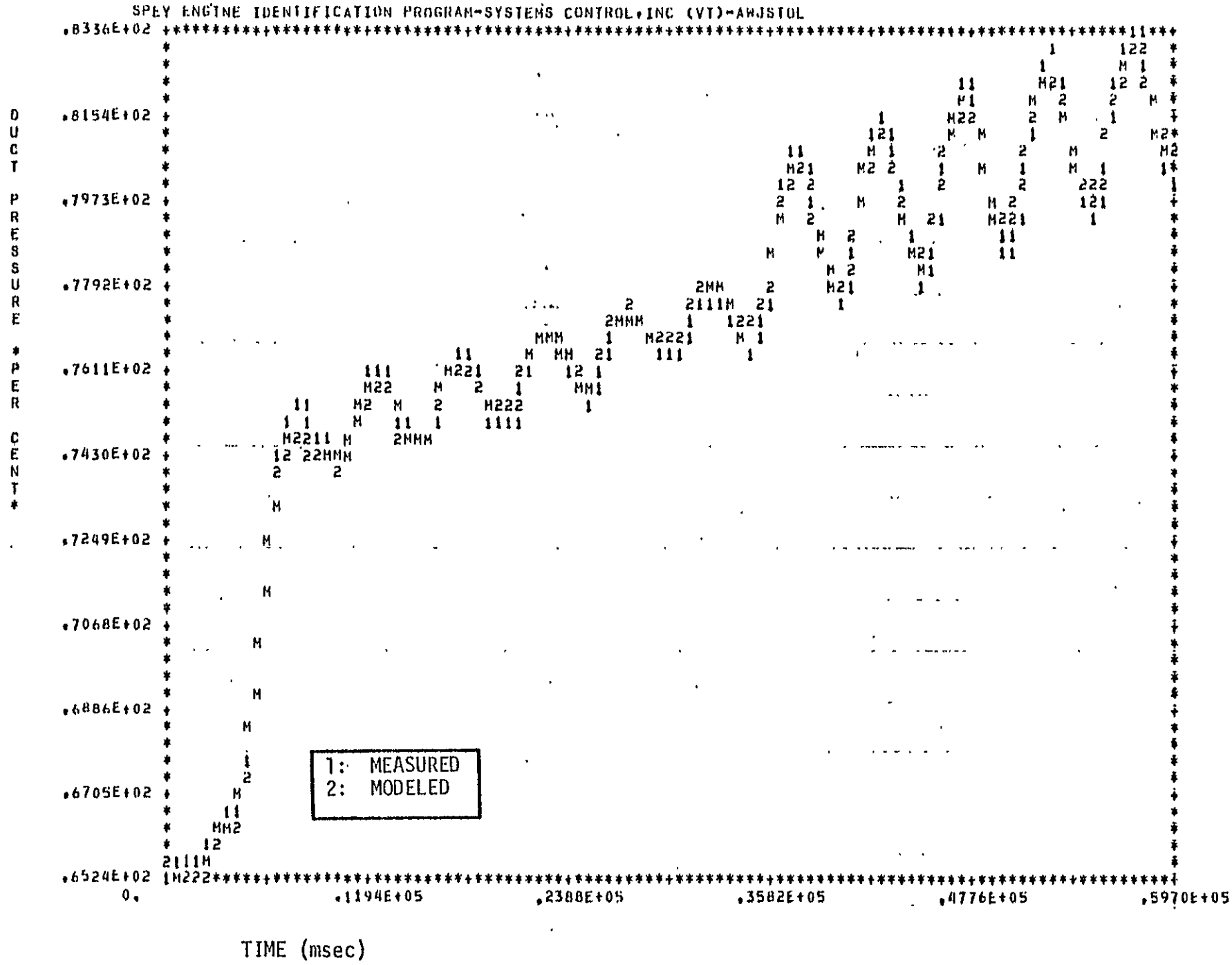

TIME (msec)

Figure C.7 (Concluded)

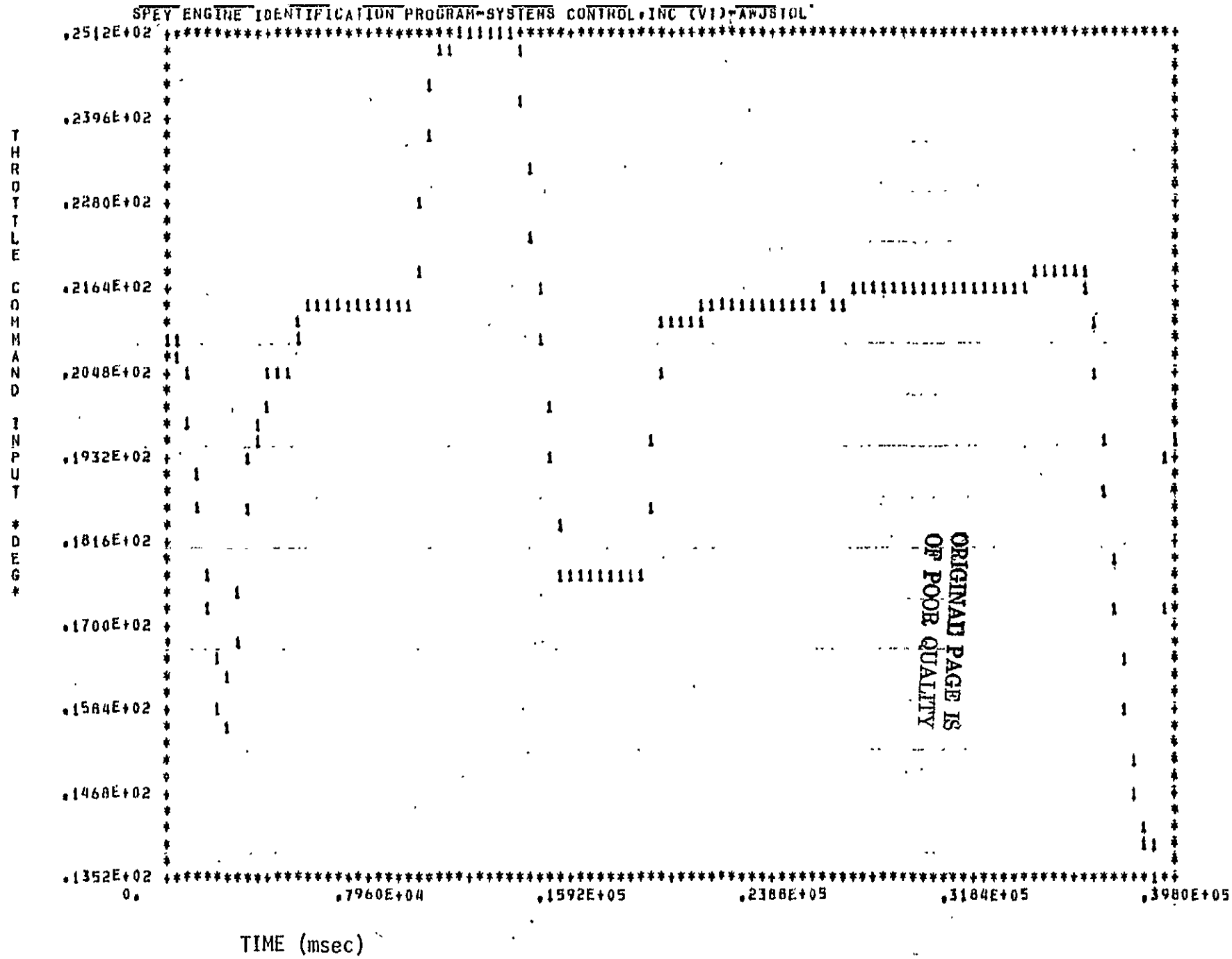

ORIGINAL PAGE IS
OF POOR QUALITY

Figure C.8 Engine Parameter Estimation Match - Record 7, Right Engine

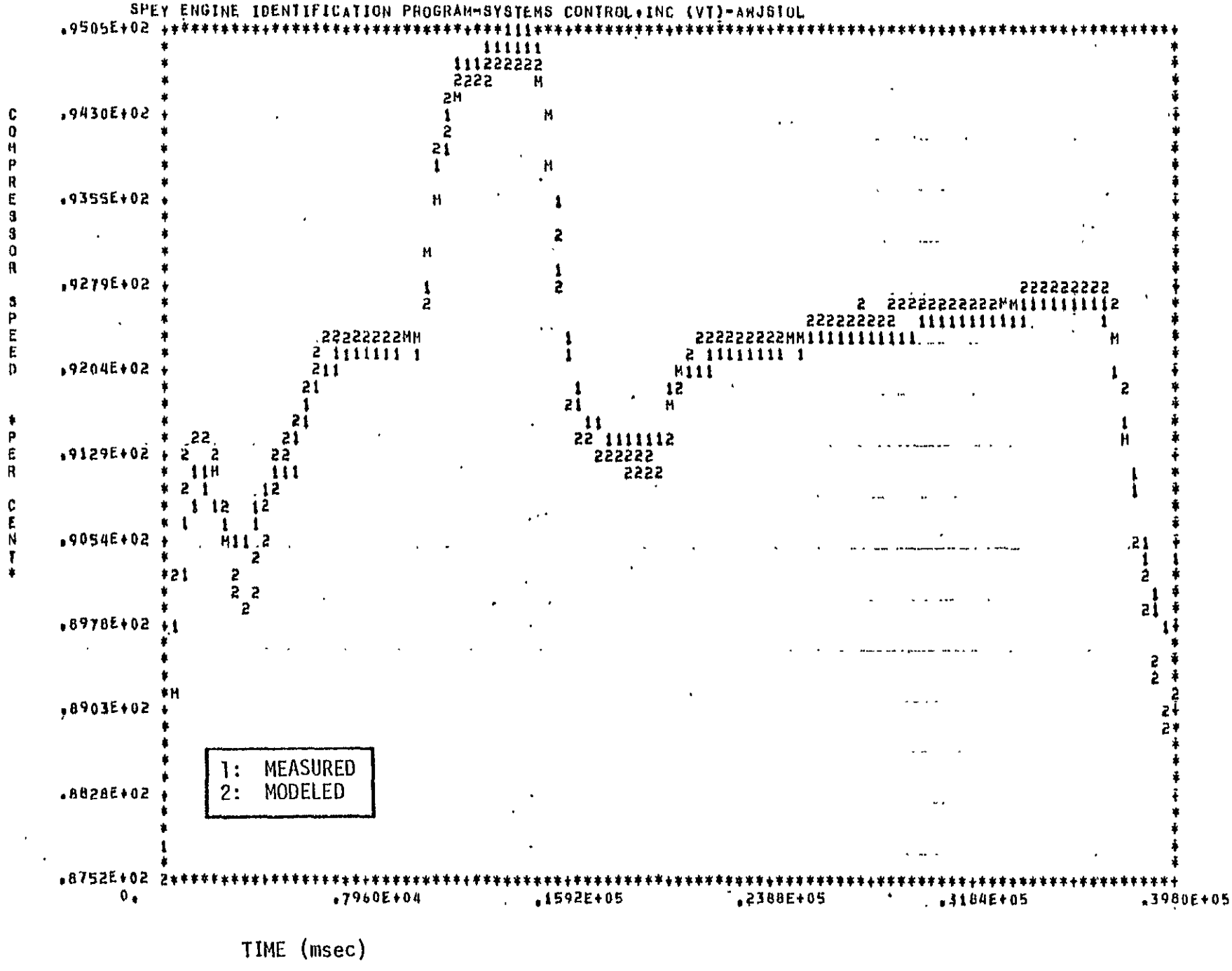

Figure C.8 (Continued)

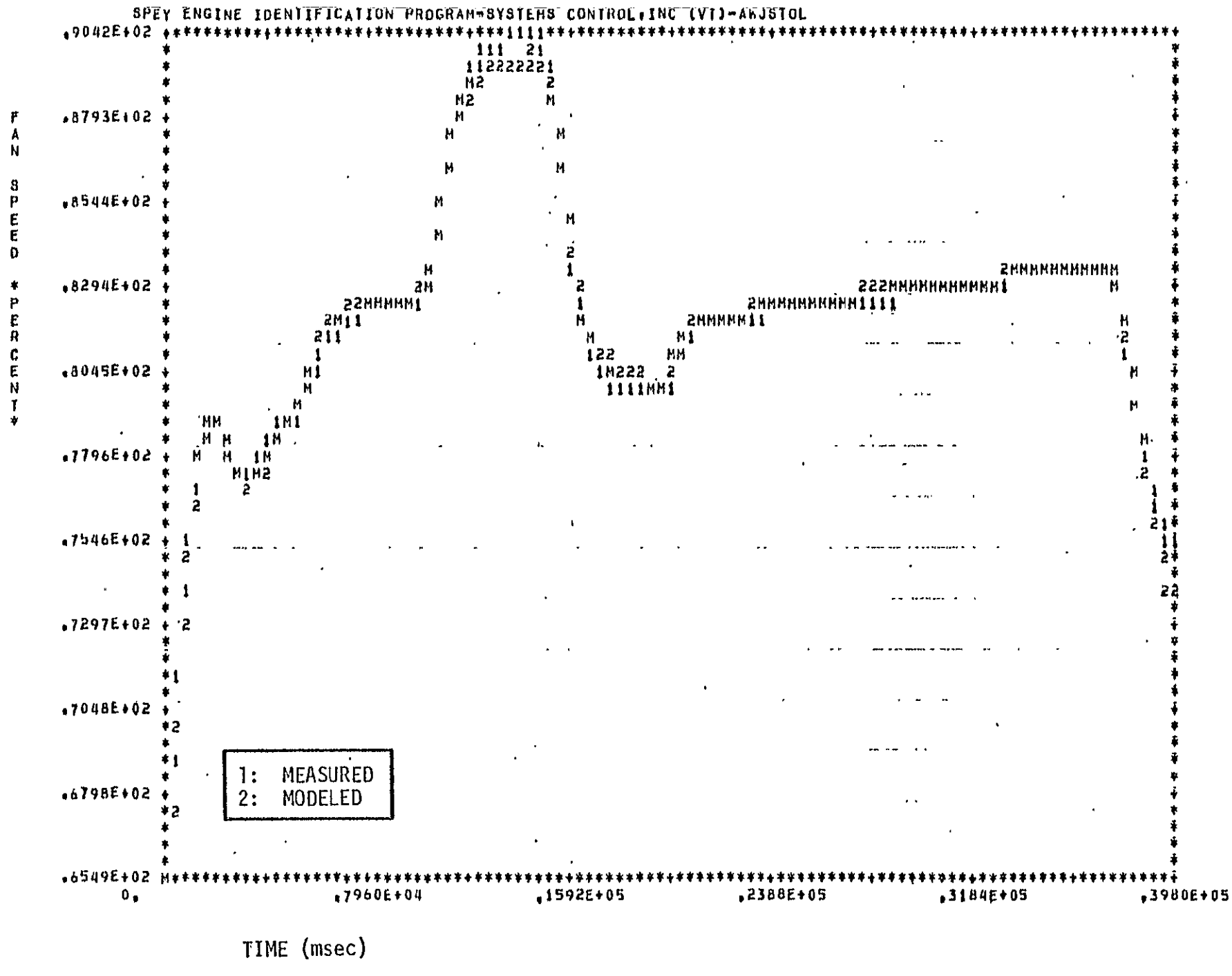

TIME (msec)

Figure C.8 (Continued)

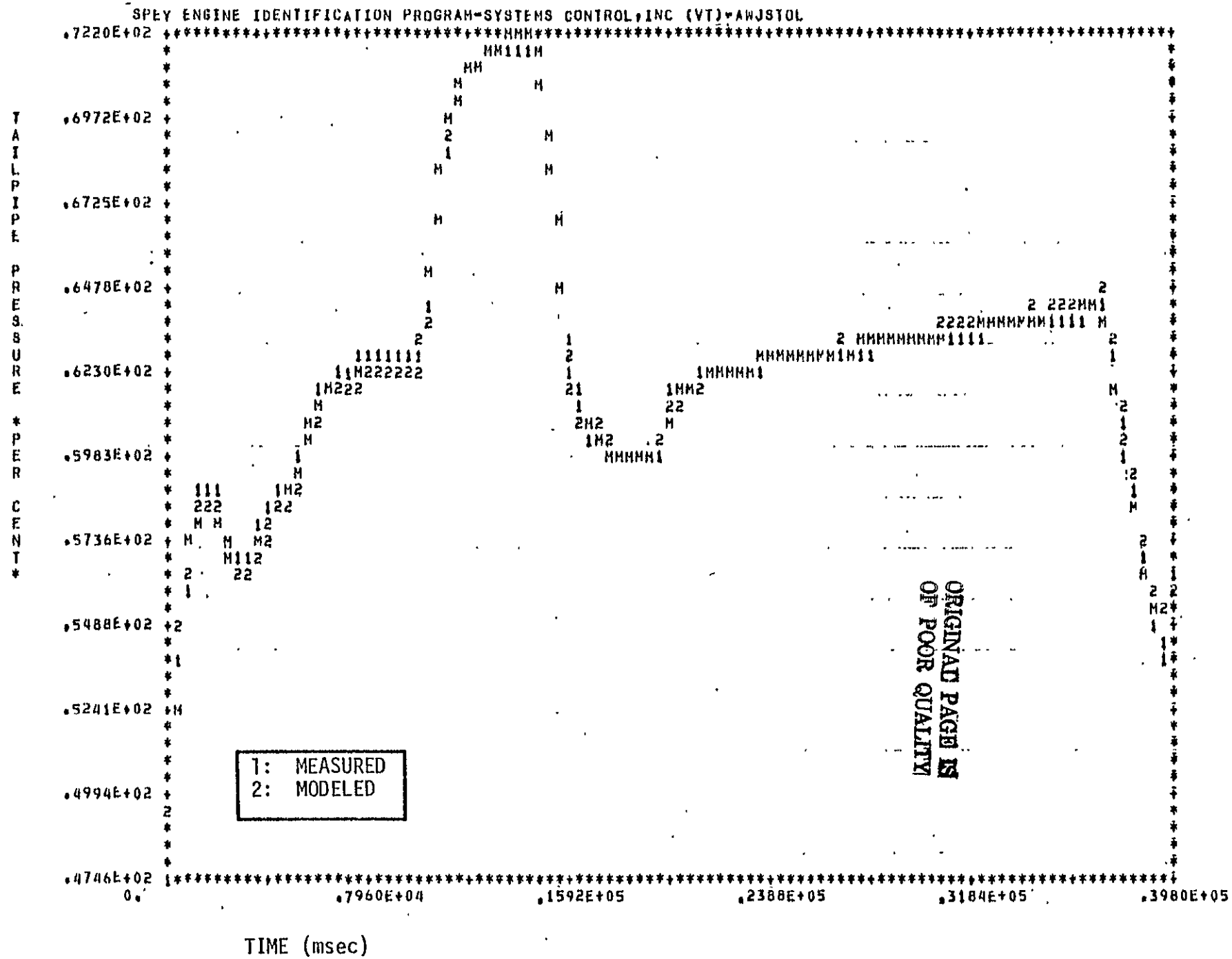

ORIGINAL PAGE IS
OF POOR QUALITY

Figure C.8 (Continued)

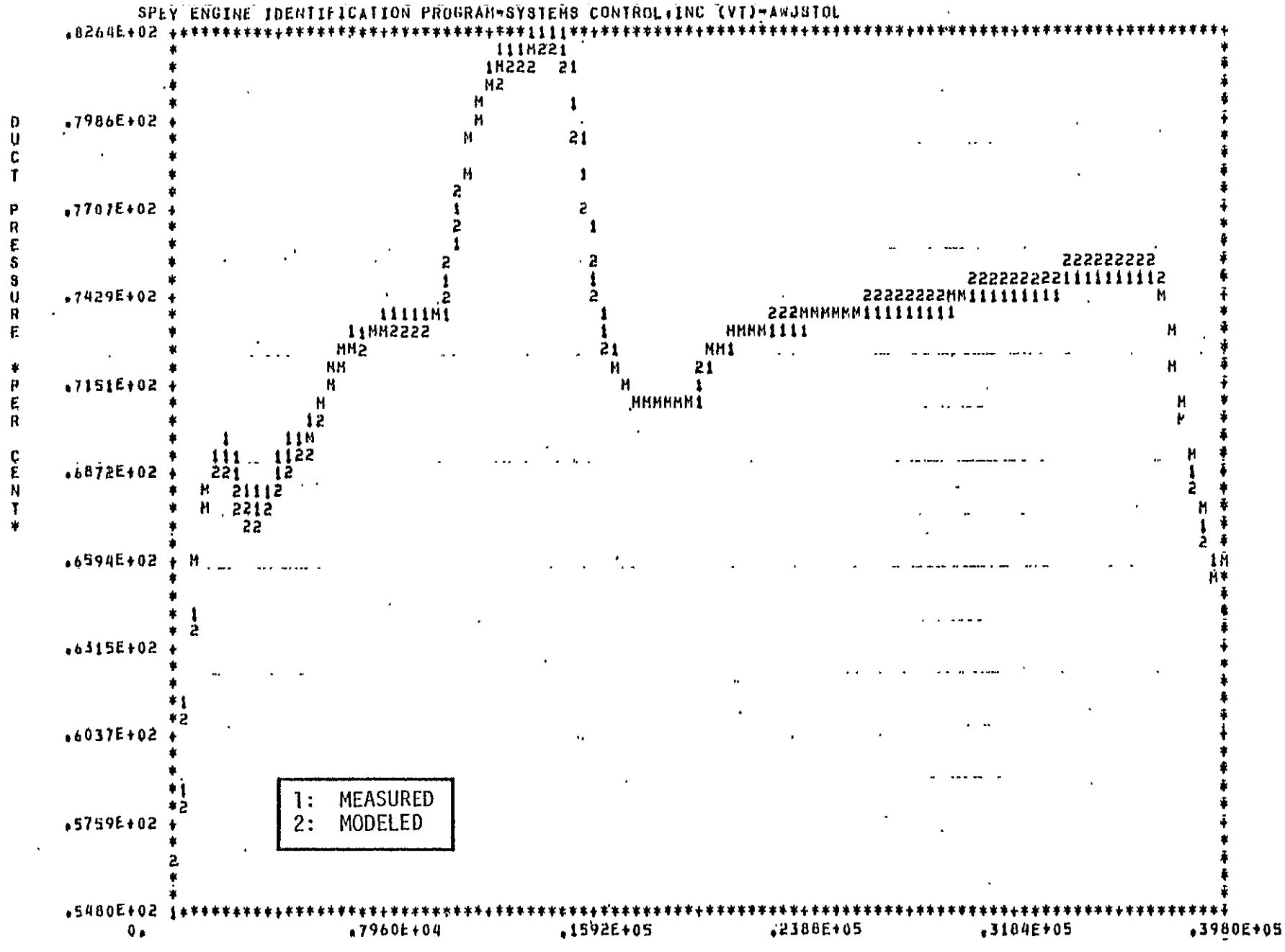

TIME (msec)

Figure C.8 (Concluded)

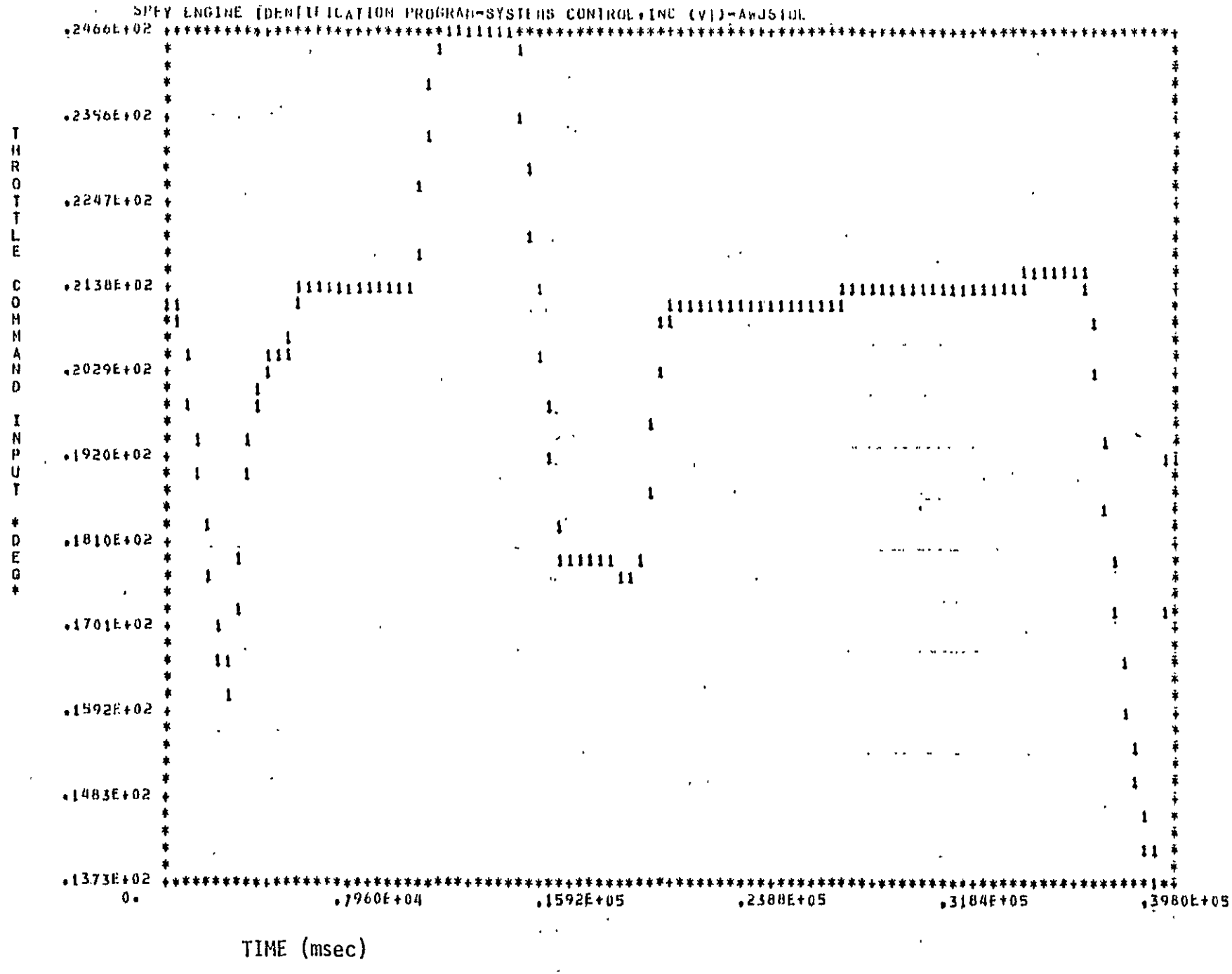

Figure C.9 Engine Parameter Estimation Match - Record 7, Left Engine

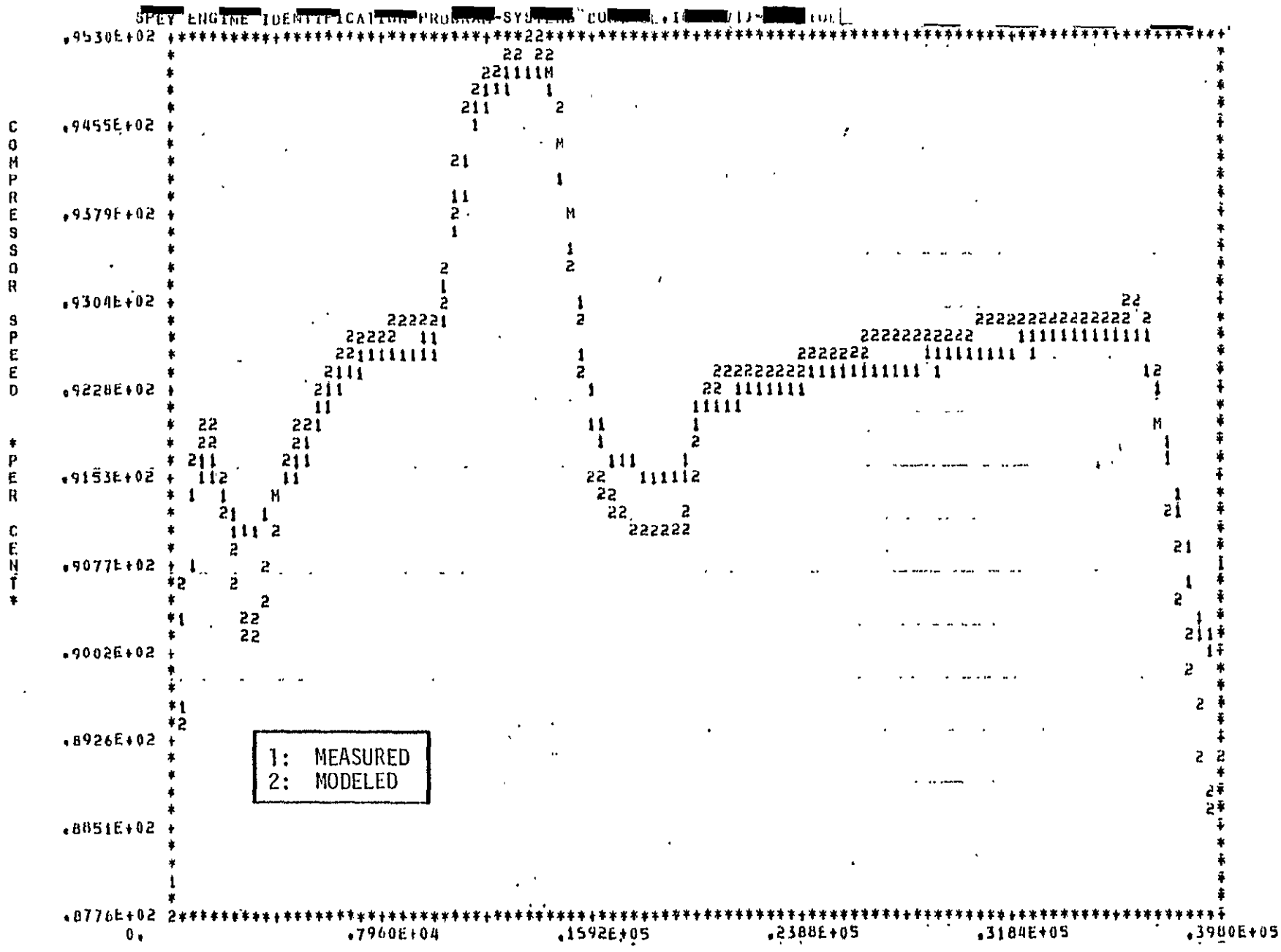

TIME (msec)

Figure C.9 (Continued)

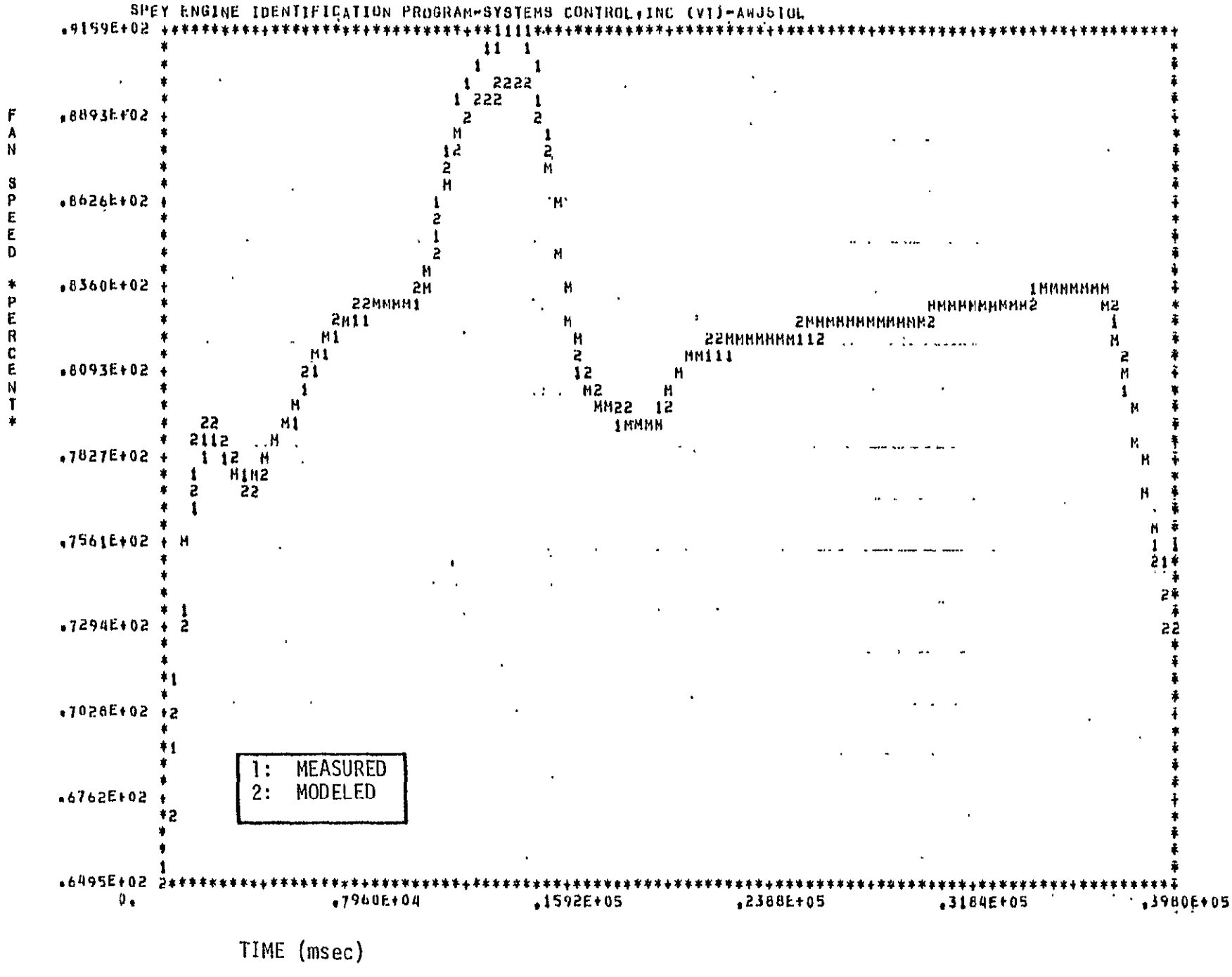

TIME (msec)

Figure C.9 (Continued)

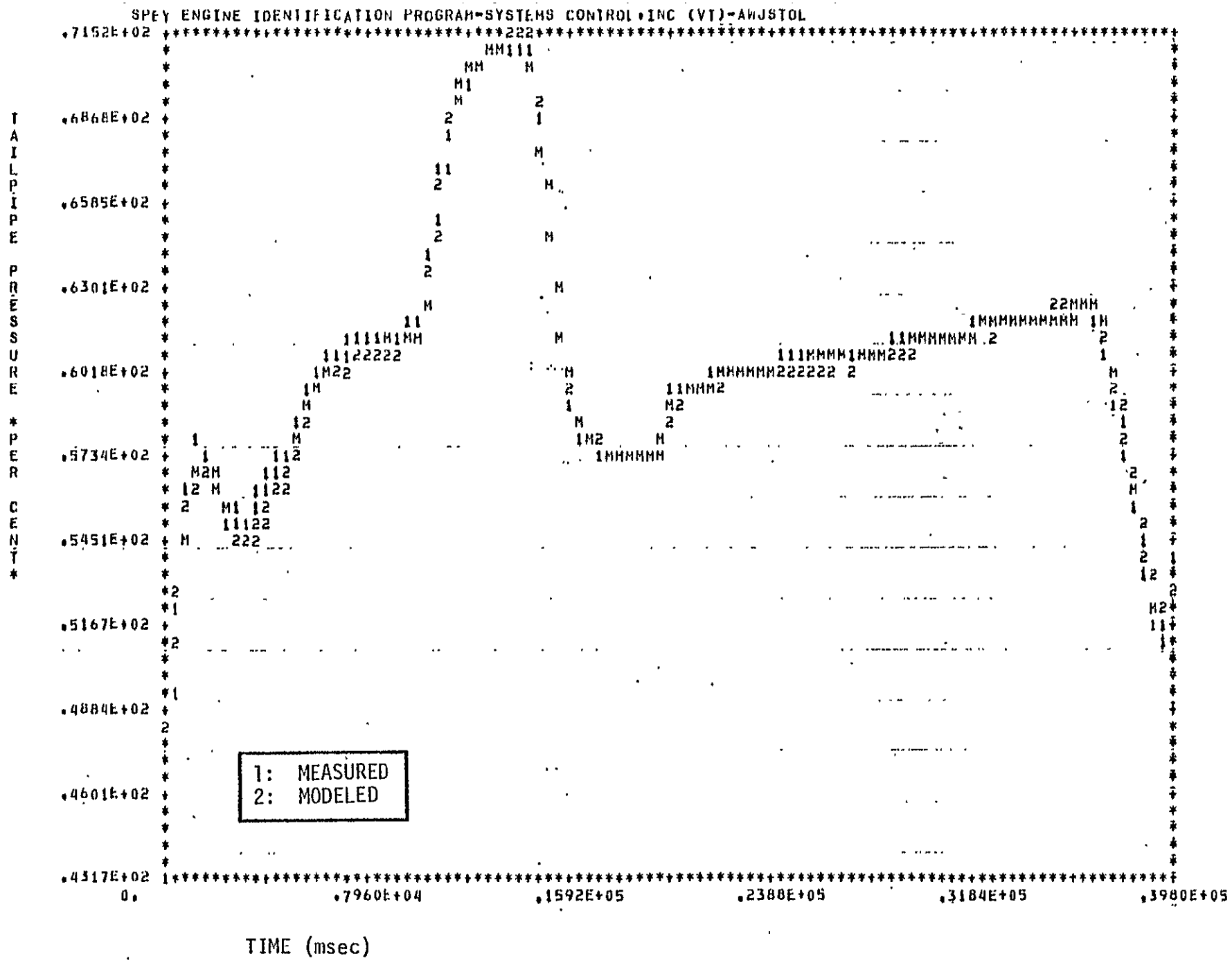

Figure C.9 (Continued)

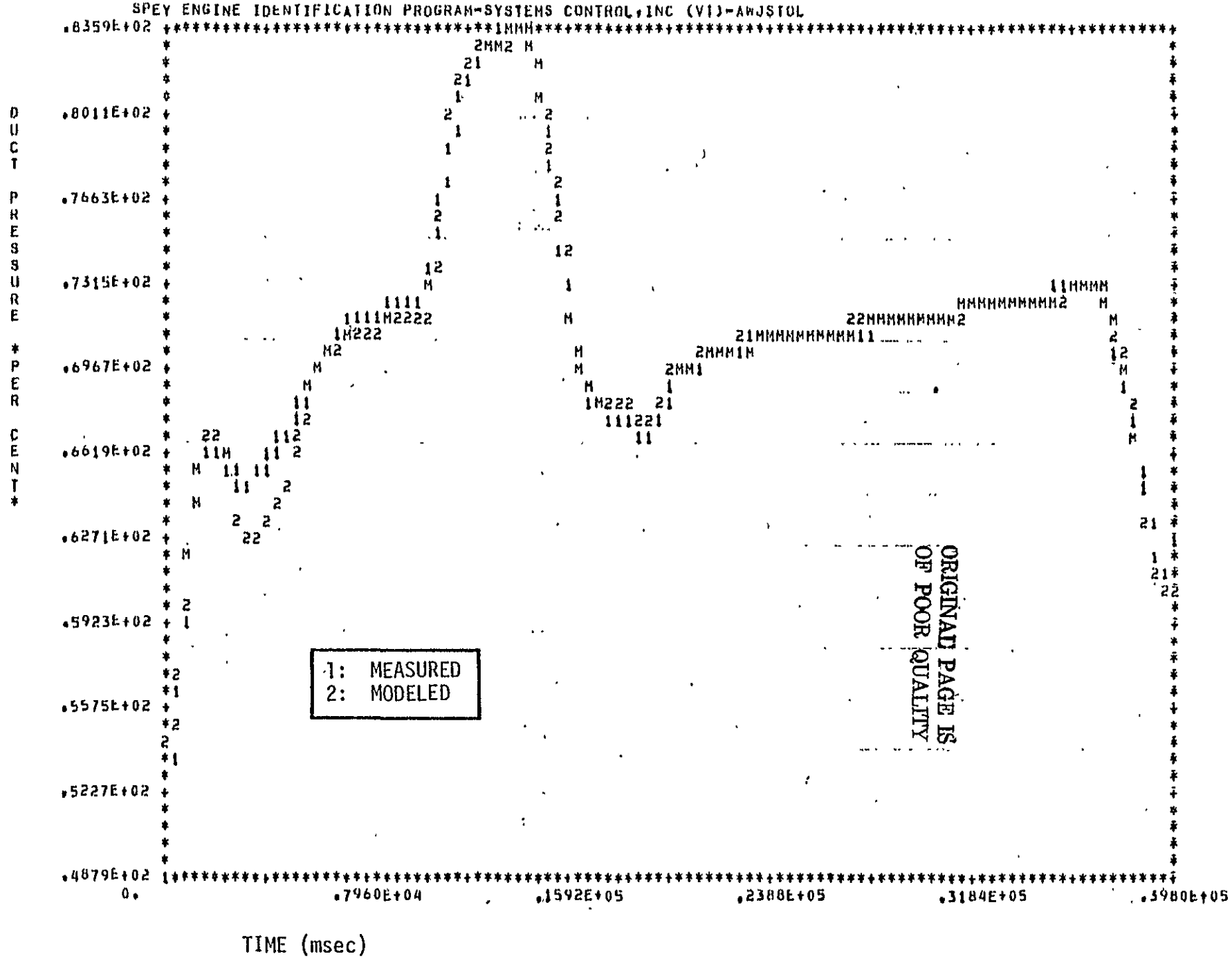

TIME (msec)

Figure C.9 (Concluded)

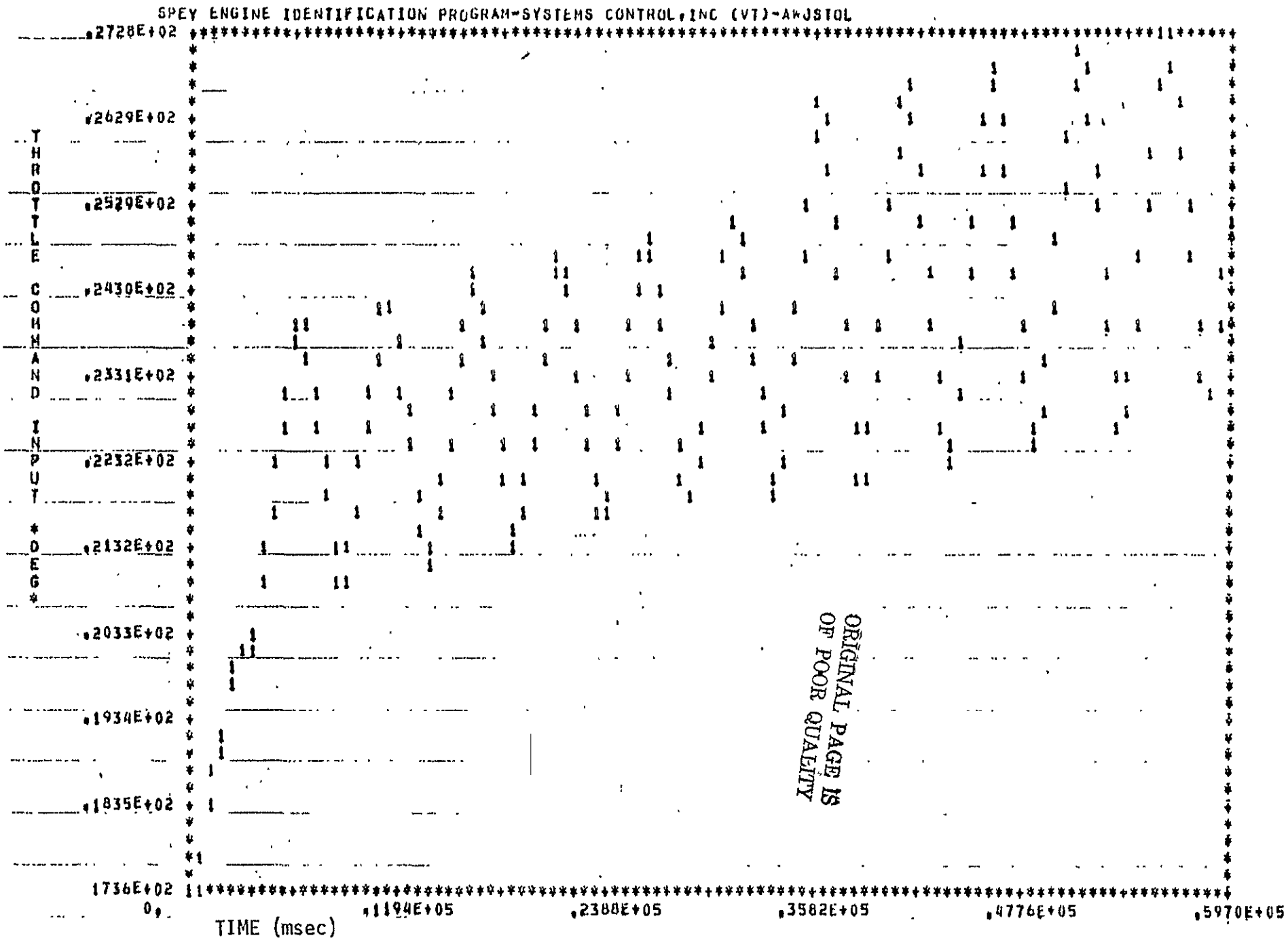

ORIGINAL PAGE IS OF POOR QUALITY

Figure C.10 Fuel Control Estimation Match - Record 3, Right Engine

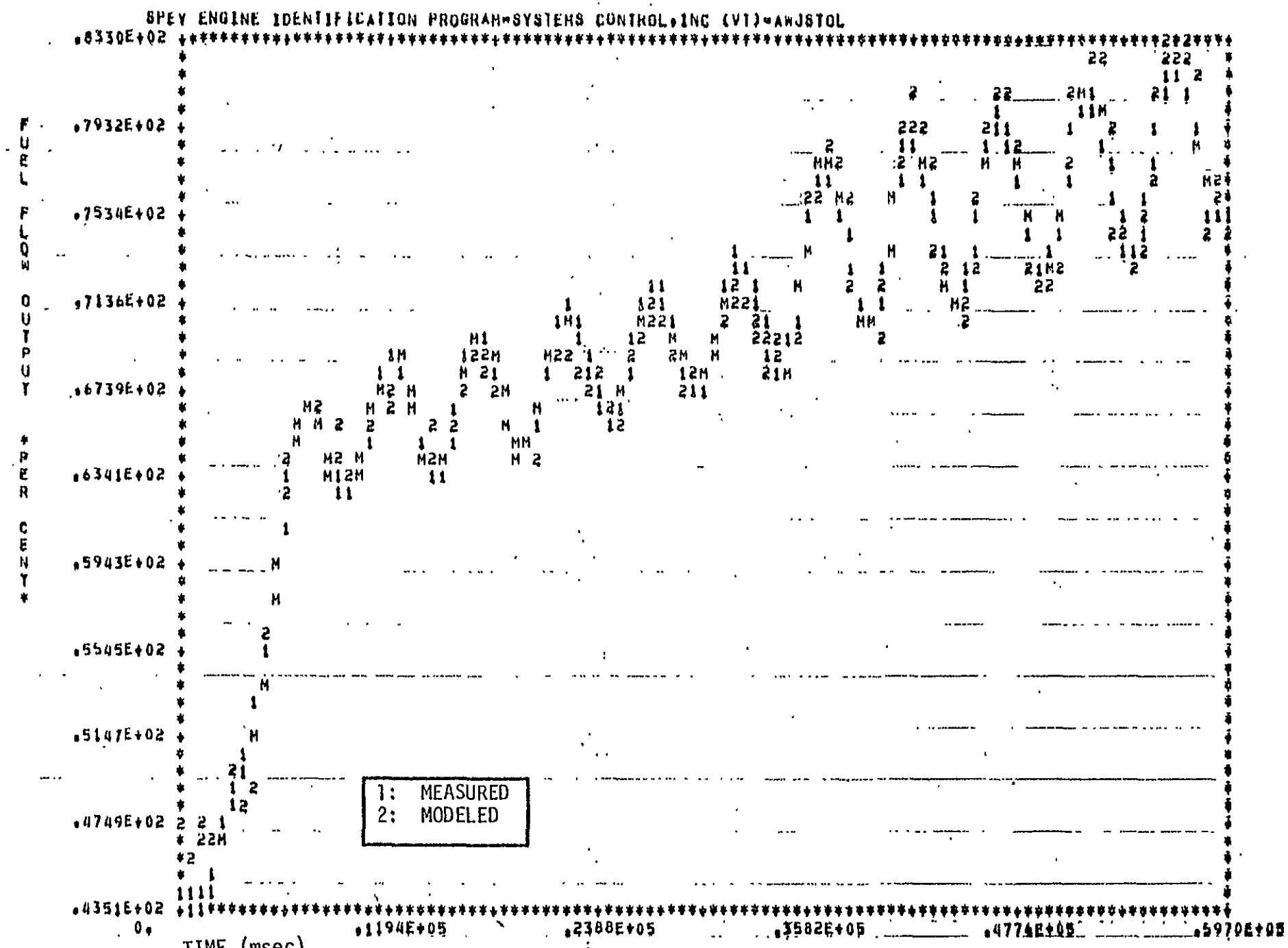

Figure C.10 (Concluded)

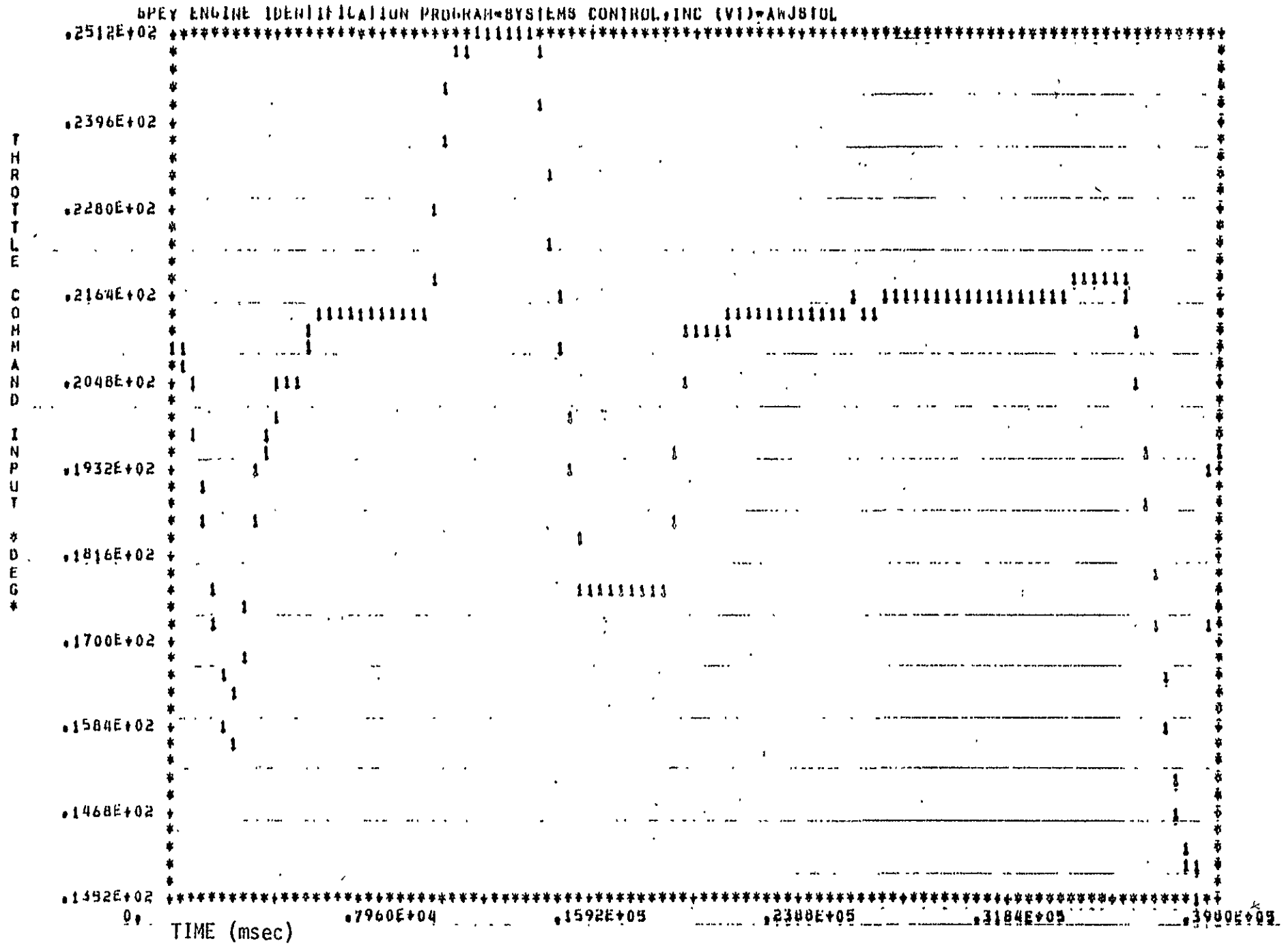

Figure C.11 Fuel Control Estimation Match - Record 7, Right Engine

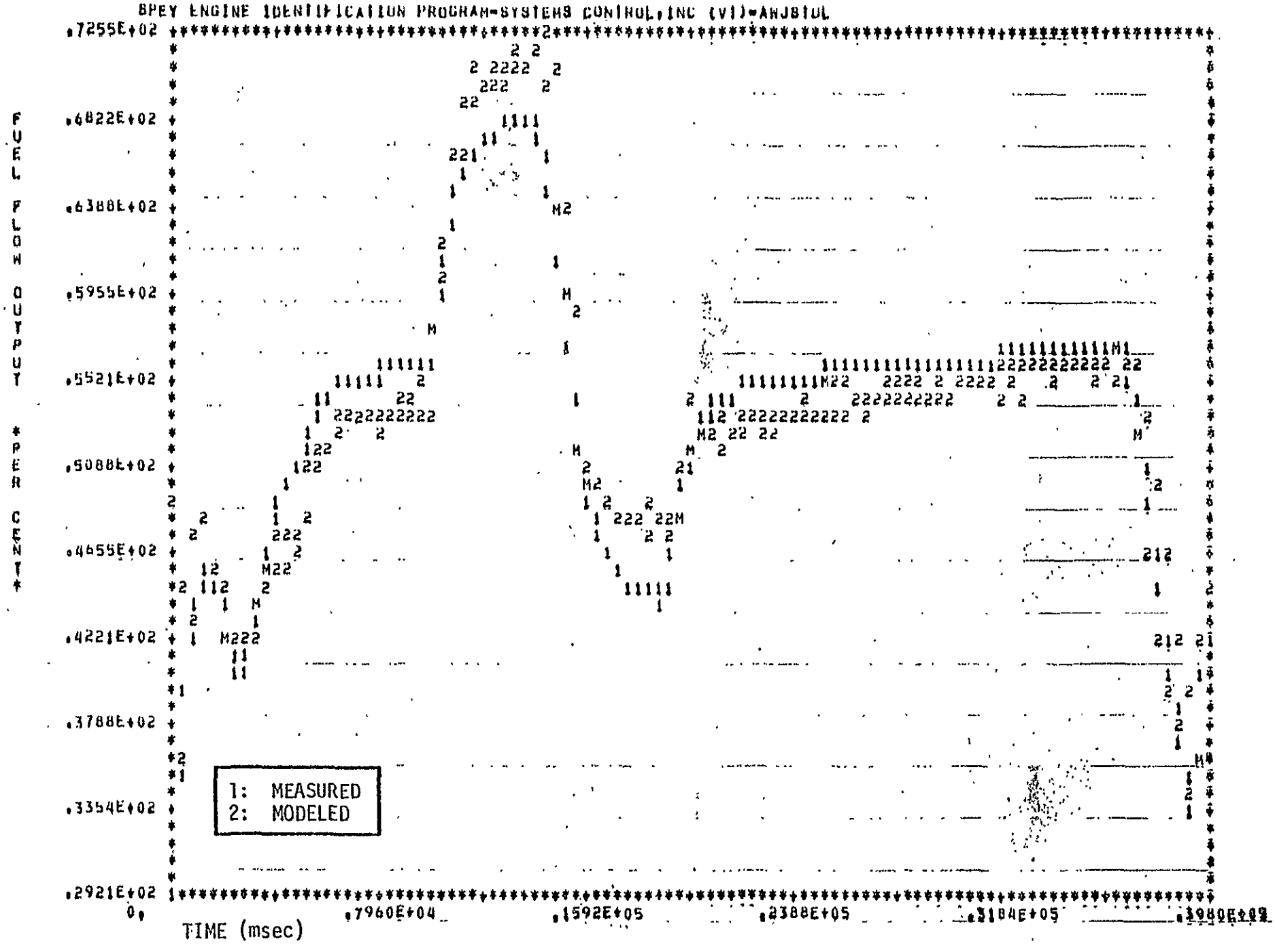

Figure C.11 (Concluded)