Hq/MHD/L. E. DAY

JSC-13045

Back file 1

Space Shuttle Orbiter Approach and Landing Test Evaluation Report

Captive-Active Flight Test Summary

September 1977

NASA
National Aeronautics and
Space Administration

Lyndon B. Johnson Space Center
Houston, Texas

JSC-13045

SPACE SHUTTLE ORBITER
APPROACH AND LANDING TEST
EVALUATION REPORT

CAPTIVE-ACTIVE FLIGHT TEST SUMMARY

PREPARED BY

Approach and Landing Test Evaluation Team

APPROVED BY

Donald K. Slayton
Manager, Approach and Landing Test

NATIONAL AERONAUTICS AND SPACE ADMINISTRATION
LYNDON B. JOHNSON SPACE CENTER
HOUSTON, TEXAS
September 1977

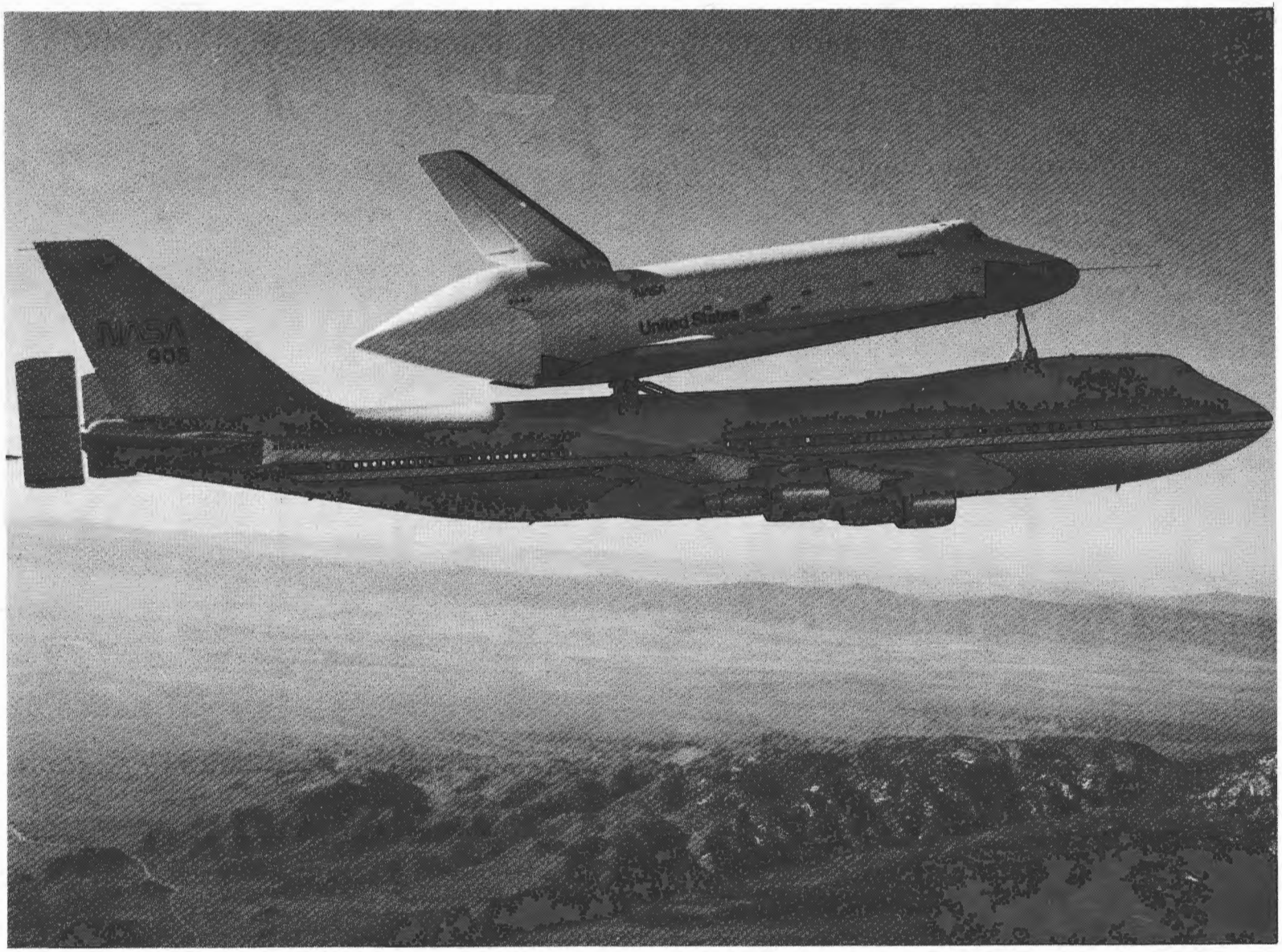

Mated Orbiter/carrier aircraft configuration for captive-active flights

CONTENTS

Section		Page
1.0	INTRODUCTION	1-1
2.0	FLIGHT SUMMARY	2-1
2.1	FIRST FLIGHT	2-1
2.2	SECOND FLIGHT	2-3
2.3	THIRD FLIGHT	2-5
3.0	ORBITER PERFORMANCE ASSESSMENT	3-1
3.1	STRUCTURES	3-1
3.1.1	Aerosurface Actuator Dynamics	3-1
3.1.2	Flutter Tests	3-1
3.1.3	Buffet Tests	3-1
3.1.4	Structural Loads	3-2
3.2	MECHANICAL SYSTEMS	3-2
3.3	POWER	3-2
3.3.1	Auxiliary Power Units	3-2
3.3.2	Hydraulics	3-5
3.3.3	Fuel Cells	3-5
3.3.4	High Pressure Gas Storage System	3-5
3.4	PYROTECHNICS	3-6
3.5	AVIONICS	3-6
3.5.1	Electrical Power Distribution and Control	3-6
3.5.2	Instrumentation	3-6
3.5.3	Communications and Tracking	3-7
3.5.4	Data Processing System Hardware	3-8

Section | Page

3.5.5 Flight Control System 3-9

3.5.6 Guidance, Navigation and Control Hardware 3-9

3.5.7 Displays and Controls 3-10

3.5.8 Flight Software 3-11

3.6 ENVIRONMENTAL CONTROL AND LIFE SUPPORT SUBSYSTEM 3-12

3.7 AERODYNAMICS 3-13

3.8 GOVERNMENT-FURNISHED EQUIPMENT 3-18

4.0 PILOT'S REPORTS 4-1

4.1 FIRST FLIGHT 4-1

4.1.1 Crew Ingress to Backout From Mate/Demate Device 4-1

4.1.2 Backout From Mate/Demate Device to Takeoff 4-2

4.1.3 Takeoff 4-4

4.1.4 Flight Phase 4-5

4.1.5 Postflight 4-7

4.1.6 General Comments 4-9

4.1.6.1 Camera Operation 4-9

4.1.6.2 Displays and Controls 4-9

4.1.6.3 Lighting and Visibility 4-9

4.1.7 Recommendations 4-10

4.2 SECOND FLIGHT 4-11

4.2.1 Crew Ingress 4-11

4.2.2 Taxi 4-11

4.2.3 Takeoff 4-12

4.2.4 Flutter and Speed Brake Tests at 230 Knots 4-12

4.2.5 Flutter and Speed Brake Tests at 270 Knots 4-13

Section Page

4.2.6 Separation Data Run 4-13

4.2.7 Autoland Fly-Through 4-14

4.2.8 Postflight 4-17

4.2.9 Fault Message Summary 4-17

4.2.10 General Comments 4-17

4.2.10.1 TACAN 4-17

4.2.10.2 Visibility 4-18

4.2.10.3 Cabin Cameras 4-18

4.3 THIRD FLIGHT 4-19

4.3.1 Crew Ingress to Clearance of Mate/Demate Device. . 4-19

4.3.2 Backout From Mate/Demate Device to Takeoff 4-19

4.3.3 Takeoff Through Landing 4-20

4.3.4 Postflight 4-22

4.3.5 General 4-23

4.3.5.1 TACAN 4-23

4.3.5.2 Altitude Rate Meter 4-24

4.3.5.3 Ambient Lighting 4-24

4.3.5.4 Disabled Intercommunications Evaluation 4-24

4.3.6 Recommendations 4-25

5.0 GROUND OPERATIONS 5-1

6.0 ANOMALY SUMMARY 6-1

6.1 HYDRAULIC SYSTEM 1 WATER BOILER STEAM VENT LINE TEMPERATURE READING WAS LOW 6-1

6.2 ALERT MESSAGE "HSI TRANS SW R" WAS DISPLAYED TO THE CREW 6-1

Section Page

6.3 COMMANDER'S ATTITUDE DIRECTOR INDICATOR ROLL DISPLAY FAILED 6-3

6.4 AUXILIARY POWER UNIT 1 FUEL PUMP BELLOWS SEAL FAILED . . 6-4

6.5 INERTIAL MEASUREMENT UNIT 1 WOULD NOT GO TO OPERATE . . . 6-4

6.6 GENERAL PURPOSE COMPUTER 3 FAILED 6-10

6.7 LEFT-HAND OUTBOARD ELEVON PRIMARY DIFFERENTIAL PRESSURE WAS INTERMITTENT 6-12

6.8 NOSE LANDING GEAR DOOR THRUSTER TRIGGERING PAWL DID NOT FUNCTION 6-12

6.9 AUXILIARY POWER UNIT 1 EXHAUST DUCT TEMPERATURE MEASUREMENT FAILED 6-15

7.0 FLIGHT TEST ASSESSMENT 7-1

7.1 FIRST FLIGHT 7-1

7.2 SECOND FLIGHT 7-1

7.3 THIRD FLIGHT 7-1

7.4 FLIGHT TEST REQUIREMENTS STATUS 7-2

8.0 CONCLUSIONS 8-1

9.0 REFERENCES 9-1

APPENDIX A - VEHICLE DESCRIPTION A-1

APPENDIX B - METEOROLOGICAL DATA B-1

APPENDIX C - MASS PROPERTIES C-1

1.0 INTRODUCTION

The captive-active phase of the Approach and Landing Test Program consisted of three mated carrier aircraft/Orbiter flights with an active manned Orbiter. The objectives of this series of flights were to (1) verify the separation profile, (2) verify the integrated structure, aerodynamics, and flight control system, (3) verify Orbiter integrated system operations, and (4) refine and finalize carrier aircraft, Orbiter crew, and ground procedures in preparation for free flight tests. This report contains a summary description of the flights; an assessment of flight test requirements accomplished; an assessment of the performance of the Orbiter and the Orbiter/crew interface; a discussion of ground operations; and discussions of significant flight anomalies.

The general configuration of the mated carrier aircraft/Orbiter 101 is shown in appendix A. Orbiter 101 is configured as closely as practical to the hardware and software to be used in the approach and landing phase of orbital flights. However, there are a number of differences between Orbiter 101 and Orbiter 102, the vehicle to be used for orbital flight test. Appendix A also lists features of Orbiter 101 that are unique for the Approach and Landing Test Program.

Meteorological data and vehicle mass properties are given in appendixes B and C, respectively.

Greenwich mean time (G.m.t.) is used in this report and elapsed flight time is referenced to carrier aircraft brake release prior to takeoff (T = 0). Unless otherwise noted, carrier aircraft altimeter altitudes have been corrected to true altitudes as determined from C-band radar tracking data (refs. 1, 2 and 3) and are referenced to mean sea level (MSL). The origin or the runway 17L coordinate system is approximately 2220 feet MSL. Velocities are reported in knots equivalent air speed (KEAS). All flights were conducted at Edwards Air Force Base, California.

2.0 FLIGHT SUMMARY

2.1 FIRST FLIGHT

The first flight, designated captive-active flight 1A, was conducted on June 18, 1977. The flight had been scheduled for June 17 but was rescheduled because of a malfunctioning onboard computer during preflight checks. The Orbiter was manned by Fred W. Haise, Jr., Commander, and Charles G. Fullerton, Pilot. The carrier aircraft crew was Fitzhugh L. Fulton, Jr., Captain; Thomas C. McMurtry, Copilot; Victor W. Horton and Louis E. Guidry, Flight Engineers.

Takeoff was from runway 22 with carrier aircraft brake release at 15:06. A single circuit of a generally oval 10- by 60-nautical mile ground track pattern was flown at a maximum altitude of 15 630 feet. A flight control system direct mode check was performed about 12 minutes after takeoff with application of Orbiter control surface pulses from the rotational hand controller and the rudder pedals. A flutter test was performed at 19 minutes elapsed time at a velocity of approximately 180 knots. This test involved three control surface inputs, with a 10-second period between each input. Four minutes later, the Orbiter speed brakes were deployed to 60, 80 and 100 percent with a pause between each setting for rudder deflection tests and flight assessment.

Thirty minutes into the flight, auxiliary power unit 1 was activated as planned. The unit operated normally throughout the remainder of the flight.

A control stick steering stability and polarity check was initiated at 38 minutes elapsed time. This test included control surface inputs from the rotational hand controller and rudder pedals while operating in the pitch, roll, and yaw control stick steering modes. The flight was terminated about 10 minutes after completion of the test with touchdown at 16:02. The major events, ground track and altitude profile for captive-active flight 1A are shown in figure 2-1.

Events	Item[a]	Time, min	Altitude, ft MSL[b]
Takeoff	1	0	2 220
Flight control system direct mode check	2	12	12 620
Flutter check at 180 knots	3	19	15 630
Speed brake check	4	23	15 630
Control stick steering mode and polarity check	5	38	15 630
Shuttle Carrier Aircraft begin descent	6	46	15 630
Touchdown	7	56	2 220

[a]Events are indicated on altitude profile below.
[b]True altitude based on C-band radar data.

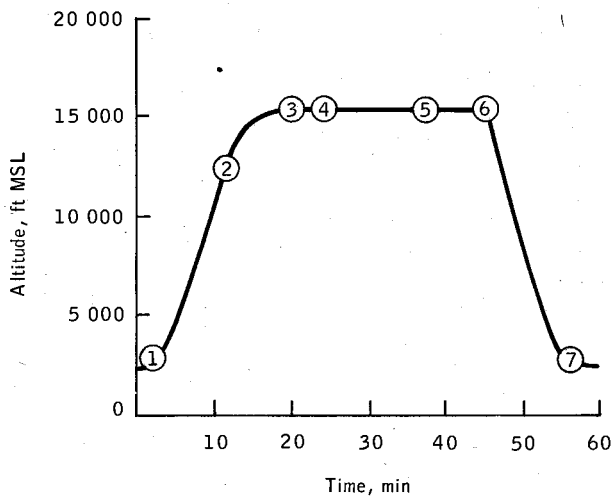

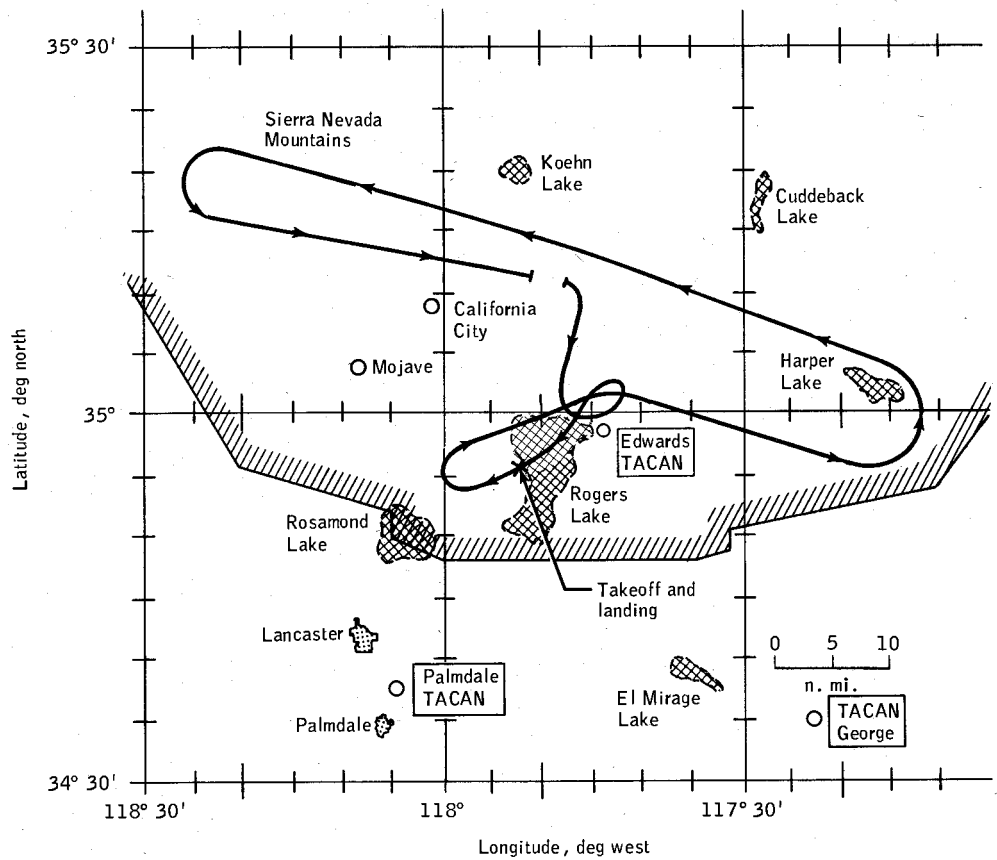

Figure 2-1.- Captive-active flight 1A ground track and altitude profile.

2.2 SECOND FLIGHT

The second flight, designated captive-active flight 1, was conducted on June 28, 1977. The Orbiter was manned by Joe H. Engle, Commander, and Richard H. Truly, Pilot. The carrier aircraft crew was Fitzhugh L. Fulton, jr., Captain; Thomas C. McMurtry, Copilot; Louis E. Guidry and William R. Young, Flight Engineers.

Takeoff was from runway 22 with brake release at 14:50. A flutter test was performed beginning about 3 minutes after takeoff at an airspeed of about 230 knots, first with Orbiter control surface movements, then with carrier aircraft control surface movements. The Orbiter speed brakes were then deployed to the 60, 80 and 100 percent positions with a pause between each setting for rudder deflection tests and flight assessment.

Approximately 18 minutes into the flight, auxiliary power unit 1 was activated as planned. There was an increase in the rate of fuel usage for the unit about 25 minutes after activation. It was determined postflight that failure of the auxiliary power unit 1 fuel pump bellows seal had caused extensive hydrazine leakage.

Upon reaching an altitude of approximately 22 980 feet and a speed of 270 knots, a high-speed flutter test was performed. This sequence was followed by a speed brake buffet test conducted between 23 020 and 18 670 feet at a speed of 270 knots. These tests were performed in the same sequence as the tests at 230 knots except that the speed brake settings were reduced to 10-percent increments from 60 to 100 percent deflection because of nearly saturated instrumentation. These tests were completed about 34 minutes into the flight and the carrier aircraft climbed back to 24 190 feet in preparation for a separation data run. Pushover occurred at about 43 minutes. The following conditions were established: 270 knots airspeed, Shuttle carrier aircraft spoilers deployed, and engines at idle. During the run, the Orbiter elevons were deflected 1.5° in both directions from the trim setting and the ailerons were deflected 1°. The data run was terminated by "abort separation" at 17 650 feet. The carrier aircraft then regained an altitude of 20 450 feet for an autoland fly-through test. Pushover for this test occurred about 54 minutes into the flight with the vehicle in a 9-degree glide slope and flying at a speed of about 225 knots. Upon completion of this test, the vehicle landed on runway 22 after a total flight time of 63 minutes. The major events, ground track and altitude profile for captive-active flight 1 are shown in figure 2-2.

Event	Item[a]	Time, min	Altitude, ft MSL[b]
Takeoff	1	0	2 220
Flutter check at 230 knots	2	3	5 710
Speed brake test at 230 knots	3	10	14 020
Carrier aircraft begin special-rated thrust, push-over and accelerate to 270 knots	4	19	20 390
Flutter check at 270 knots	5	26	22 980
Speed brake test at 270 knots	6	29	23 020
Separation data run at 270 knots	7	43	24 190
End separation data run	8	44	17 650
Autoland fly through	9	54	20 450
Touchdown	10	63	2 220

[a]Events are indicated on altitude profile below.
[b]True altitude based on C-band radar data.

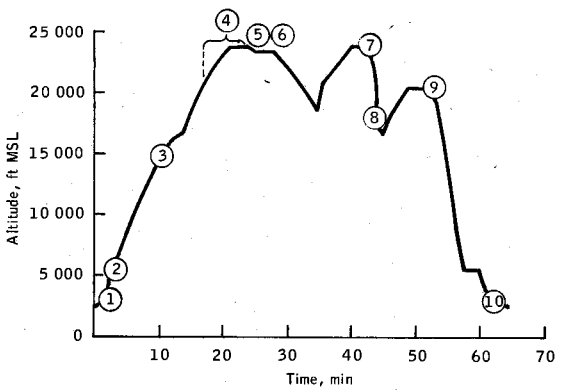

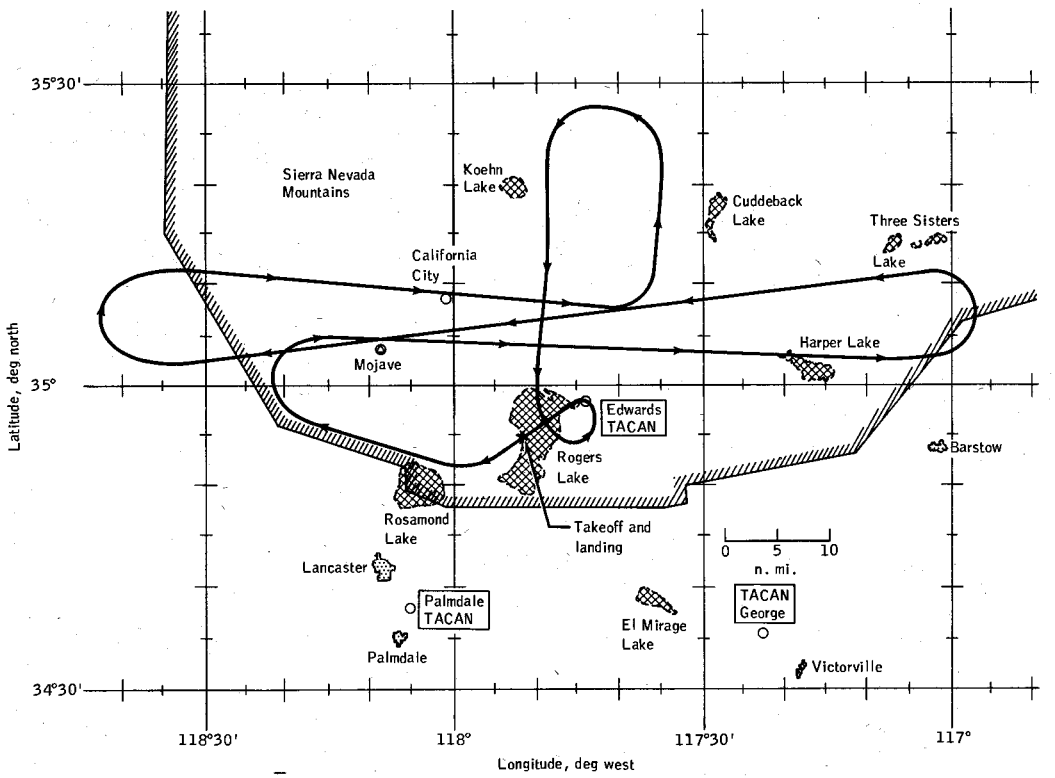

Figure 2-2.- Captive-active flight 1 ground track and altitude profile.

2.3 THIRD FLIGHT

The third flight, designated captive-active flight 3, was conducted on July 26, 1977. The Orbiter was manned by Fred W. Haise, Jr., Commander, and Charles G. Fullerton, Pilot. The carrier aircraft was manned by Fitzhugh L. Fulton, Jr., Captain; Thomas C. McMurtry, Copilot; and Victor W. Horton and Vincent A. Alvarez, Flight Engineers.

Takeoff was from runway 22 with brake release at 14:47. Auxiliary power unit 1 was activated, as planned, about 16 minutes after takeoff. Four minutes after activation, the caution and warning system indicated an over-temperature condition of the exhaust gas duct and the Orbiter crew immediately shut down the unit. An Orbiter flight control system check was performed beginning 26 minutes into the flight. This check was followed by a TACAN long-range test about 2 minutes later. Special-rated thrust was initiated upon reaching an altitude of 27 950 feet. As the vehicle reached a maximum altitude of 30 250 feet, a state vector update and a pre-separation check were made. Pushover was initiated approximately 48 minutes into the flight. The practice separation run was normal and "abort separation" was called about 1 minute after pushover at an altitude of 25 620 feet. The free-flight approach and landing profile then was simulated by configuring the carrier aircraft with landing gear down. The right and left air data probes were stowed and redeployed just prior to landing. The landing was on runway 22. During rollout, at approximately 124 knots, the Orbiter landing gear were deployed as planned. Total flight time was 60 minutes. A load test was performed prior to auxiliary power unit deactivation about 7 minutes after landing. The major events, ground track and altitude profile for captive-active flight 3 are shown in figure 2-3.

Event	Item[a]	Time, min	Altitude, ft MSL[b]
Takeoff	1	0	2 220
Intersect racetrack	2	15	17 220
Inflight flight control system checks	3	26	24 840
Reach maximum continuous thrust 200-foot-per-minute ceiling	4	37	27 940
Begin special rated thrust	5	37	27 950
Pushover for practice separation run	6	48	30 250
Launch ready	7	49	25 620
Landing	8	60	2 220
Deploy orbiter landing gear during carrier aircraft rollout	9	60	2 220

[a]Events are indicated on altitude profile below.
[b]True altitude based on C-band radar data.

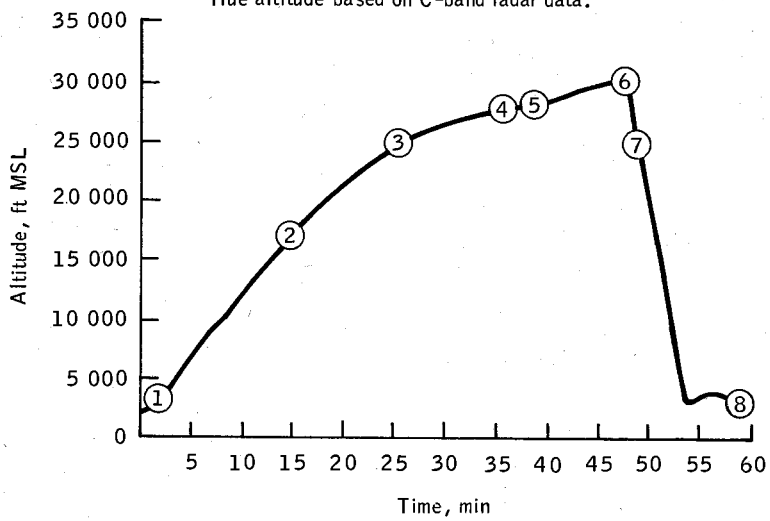

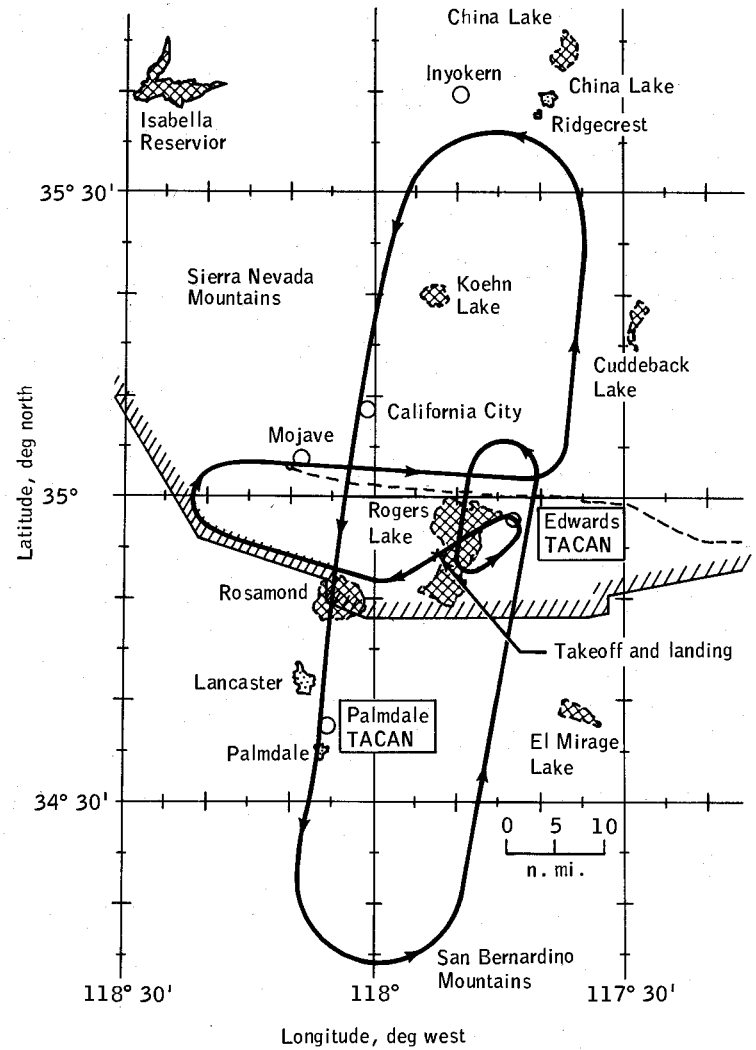

Figure 2-3.- Captive-active flight 3 ground track and altitude profile.

3.0 ORBITER PERFORMANCE ASSESSMENT

3.1 STRUCTURES

3.1.1 Aerosurface Actuator Dynamics

During the takeoff roll for the first flight, what apperared to be light buffet occurred in the 12- to 24-hertz range on both inboard elevons. The buffet increased with dynamic pressure, remaining throughout the flight at about ± 0.4 g, maximum, and then subsided during landing rollout. During postflight operations, with auxiliary power units 1 and 3 at operating pressure and unit 2 on standby, there was no evidence of this effect. However, with units 1 and 2 at operating pressure and unit 3 on standby, some sustained oscillations were noted on both inboard elevons. The right inboard elevon cycled at about 1.2 g for approximately 11 seconds, subsided for several seconds, and again cycled for about 7 seconds. The left inboard elevon exhibited similar behavior at a level of about ± 0.7 g.

Elevon oscillations in the 12- to 24-hertz region were noted several times during the second flight; all were within structural limits. Acceleration spikes of up to 3.0 g and 4.5 g, zero to peak, were noted on the inboard and outboard elevons, respectively. In general, more activity was noted at the 230-knot test point than had been noted at the 180-knot test point on the first flight. However, the oscillations diminished in going from 230 to 270 knots. It is not apparent from the data whether this effect is due to aerosurface actuator instability or to light buffet.

No dedicated structural tests were conducted on the third flight. All dynamic responses were as expected and no 16-hertz elevon responses were noted.

3.1.2 Flutter Tests

There were no sustained vibrations during the 230- or the 270-knot flutter tests. Dynamic response of the Orbiter to both the Orbiter and the carrier aircraft control raps was highly damped and is considered satisfactory.

3.1.3 Buffet Tests

On the first flight, very light lateral buffet of the vertical fin started during takeoff roll and increased with dynamic pressure to about ± 0.2 g, peak, at 3.8 hertz and ± 2.0 g at 30 hertz prior to the speed brake test. No significant longitudinal motion of the vertical fin due to buffet was noted. Opening the speed brakes to 100 percent changed the fin lateral response levels to about ± 0.25 g at 3.8 hertz and ± 3.0 g at 30 hertz. Again, the longitudinal motion was negligible. No change was noted in the fin dynamic response due to rudder deflection to 5°. Vertical stabilizer buffet response is considered to be insignificant at 180 knots.

The following approximate maximum responses in the frequency range of structural interest (4 to 8 hertz) were noted at the vertical fin tip during the speed brake tests on the second flight. These values are well within structural limits.

Velocity, knots	Speed brake setting, percent	X axis, g	Y axis, g
230	60	0.3	1.2
	100	0.3	1.8
270	60	0.6	1.2
	100	0.6	2.0

3.1.4 Structural Loads

Control surface hinge moments and structural strain levels all appeared to be low, as was expected, for the first flight.

Analyses using strain data from the second flight to calculate wing bending moment, shear, and torsion indicate good correlation with predicted values. Fuselage strains compare well with predicted values.

3.2 MECHANICAL SYSTEMS

Operation of the mechanical systems was satisfactory for all three flights. On the third flight, the air data probes were cycled in flight, going from the deployed position to the stowed position and back to the deployed position. The Orbiter landing gear were extended following carrier aircraft touchdown. Due to the inflight shutdown of auxiliary power unit 1, gear actuation was accomplished using the backup systems, i.e., pyrotechnics for the nose gear and hydraulic systems 2 and 3 to initiate deployment of the main gear. Operation of the landing gear was satisfactory; however, postflight inspection revealed that the spring bungee used to assist nose wheel door opening under adverse air loads failed to function. This anomaly is discussed in paragraph 6.8.

3.3 POWER

3.3.1 Auxiliary Power Units

The inflight performance of the auxiliary power units was normal for the three flights except for the following.

About 30 to 45 minutes after auxiliary power unit shutdown following the second flight, the pump inlet pressure of unit 1 decayed to 34 psi, indicating fuel (hydrazine) leakage. This indication was supported by an increased rate of unit 1 fuel usage about 25 minutes after activation. Postflight inspection revealed that there had been excessive leakage from the auxiliary power unit 1 fuel cavity drain. This anomaly is discussed in paragraph 6.4.

On the third flight, about 4 minutes after start-up, a faulty transducer produced a false indication of auxiliary power unit 1 exhaust gas over-temperature. The crew responded to this alarm by shutting down auxiliary power unit 1. The flight continued normally using auxiliary power units 2 and 3. Postflight inspection showed that auxiliary power unit 1 had leaked about 22 cc of fuel during inflight operation. A ground hot-fire test resulted in only 8 cc of leakage in 30 minutes. This was within limits and no corrective action was required. During postflight data analysis, erratic vibration data were observed from four accelerometers associated with auxiliary power unit 1. This condition was determined to be an instrumentation problem. (See par. 3.5.2.)

Following the first flight, ground personnel reported seeing a flame in the exhaust plume from auxiliary power units 1 and/or 2 after landing. Inspection of the exhaust impingement area (fig. 3-1) revealed only minor effects. After the vehicle turned off the runway following the second flight, ground personnel again observed flame in the exhaust plume of auxiliary power units 1 and/or 2. Limitations for operating the auxiliary power units preflight and postflight were established for the third flight; however, no flame was observed during ground operations.

The approximate fuel usage, flight operating time and cumulative operating times for the auxiliary power units are shown in the following table.

Unit	Serial Number	Fuel usage, lb	Flight run time, min	Cumulative run time, hr
First Flight				
1	106	77	35	8.2
2	109	211	86	6.0
3	103	226	83	8.7
Second Flight				
1	106	145	50	9.1
2	109	183	80	7.3
3	103	203	80	10.0
Third Flight				
1	107	8	4	6.1
2	109	173	78	8.7
3	108	192	78	7.5

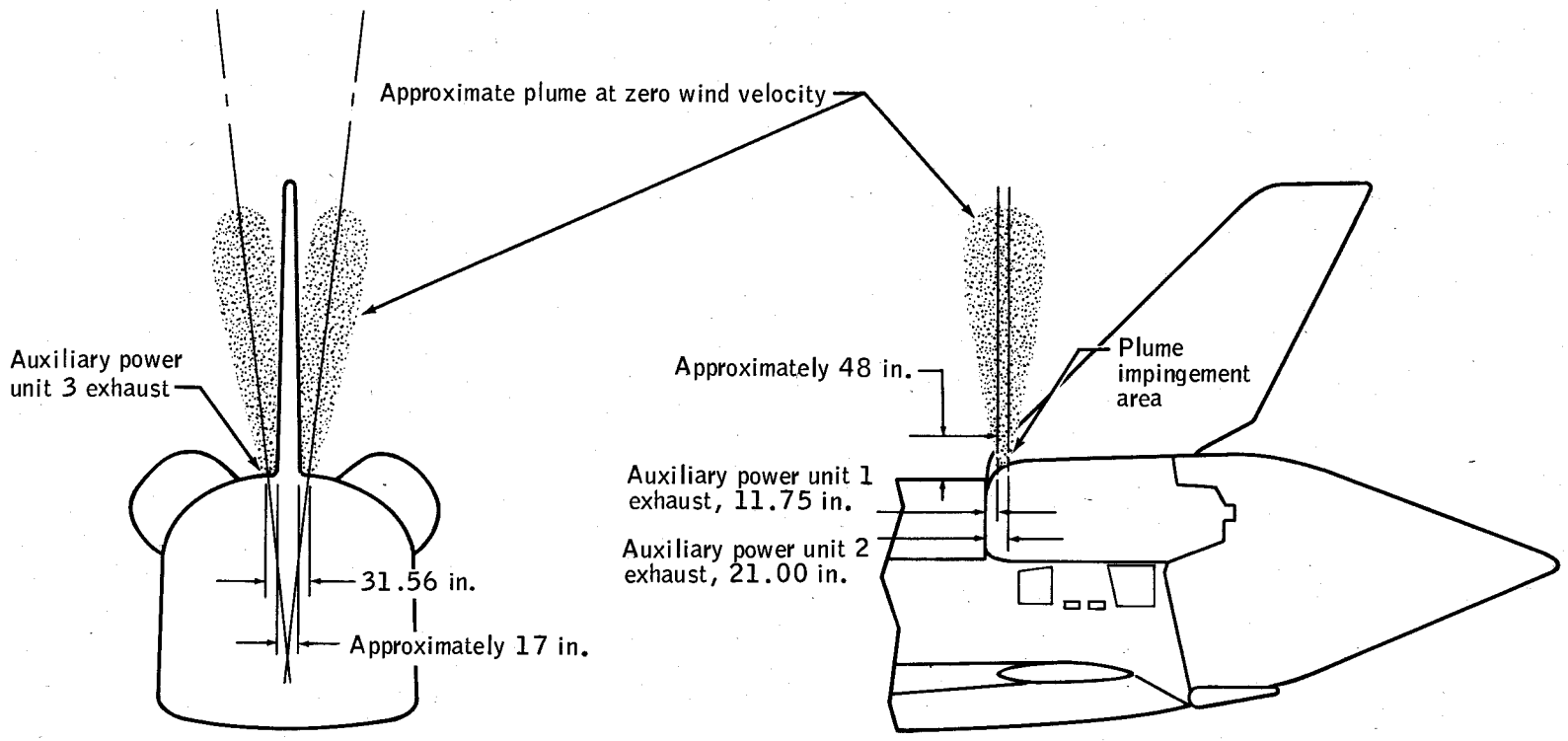

Figure 3-1.- Auxiliary power unit exhaust plumes.

3.3.2 Hydraulics

The hydraulics sybsystem performed satisfactorily. Temperatures, pressures and quantities were within the prescribed limits with the following exceptions.

On the first flight, the system 1 water boiler vent temperature decreased to 79° F and then increased when steam was produced. On the second flight, the temperature indications went no lower than 79° F and began to increase when auxiliary power unit 1 was turned on. The temperature should have remained between 170° and 250° F. This problem is discussed in paragraph 6.1.

On the third flight, as on previous flights, the pressurization of hydraulic system 3 was initiated with a reservoir pressure of 12 psia as compared to reservoir pressure levels of 50 to 100 psi for systems 1 and 2. Pressurization proceeded normally when the auxiliary power unit was turned on. Postflight, the reservoir pressure dropped to ambient pressure within 30 seconds whereas, after the 10-minute hot-fire on July 18, the decay took 12 hours. The condition was caused by a manual valve that was left open following preflight preparation. A caution note has been added to the procedure to verify proper orientation of the valve.

3.3.3 Fuel Cells

The fuel cell subsystem performance was normal for all flights. The average Orbiter power requirement was in the 14 to 15 kilowatt range which was about 10 percent less than predicted. Total fuel cell current averaged approximately 480 amperes rather than the predicted 550 amperes. The higher current levels were anticipated because of an expected power requirement to supply heater power for the auxiliary power unit cold case, which did not occur.

3.3.4 High Pressure Gas Storage System

The high pressure gas storage system operated normally and pressures remained within limits. On the second flight, secondary system hydrogen was used for 28 minutes prior to flight to conserve primary system reactants in an attempt to try and conduct the following flight without reservicing; however, reservicing was performed because of the time available as a result of the change-out of two auxiliary power units prior to the third flight. The following table gives the reactants usage for the three flights. The actual reactants usage was less than planned because of the lower-than-predicted electrical power requirement.

Reactant	Expected usage, lb	First flight, lb	Second flight, lb	Third flight, lb
Oxygen				
Primary	36.7	29.1	26.0	27.8
Secondary	0	0	0	0
Hydrogen				
Primary	4.6	3.9	2.8	3.7
Secondary	0	0	0.7	0

3.4 PYROTECHNICS

No pyrotechnics were operated on the first two flights, as planned. On the third flight, the shutdown of auxiliary power unit 1 necessitated the use of the pyrotechnic emergency uplock release circuitry to deploy the nose landing gear. System operation was verified by successful nose landing gear deployment.

3.5 AVIONICS

3.5.1 Electrical Power Distribution and Control

All electrical power distribution and control hardware operated normally.

3.5.2 Instrumentation

Both the operational and development flight instrumentation systems performed well. The following discrepancies were noted.

First flight:

a. Two X-axis acceleration measurements for auxiliary power units 1 and 2 exhibited larger-than-estimated vibration levels. The range for these two measurements was changed from 60 g to 100 g, peak-to-peak.

b. Data review revealed that the pitch rate measurement for the aerodynamic coefficient instrumentation package (ACIP) was inoperable. The measurement is not required until the free flight phase. The package (government-furnished equipment) has been replaced and no failure analysis is planned.

c. The initial portion of the preflight frequency-division multiplexing automatic calibration sequence was distorted since the automatic gain control response of the record amplifier in the wideband recorder had not stabilized. The crew had operated the AUTO CAL switch immediately after energizing the tape recorder. The crew checklist was changed for subsequent flights to require a 10-second delay between recorder turn-on and the AUTO CAL command.

d. A 1-second-duration pulse occurred on some of the vibration channels each time the Orbiter VHF transmitters were keyed on or off.

Second flight:

a. The right-hand outboard elevon accelerometer measurement failed during flight. The decision was made to conduct flight 3 and subsequent flights without corrective action since the flutter and buffet testing had been completed.

b. The left-hand outboard elevon primary delta pressure measurement was intermittent during flight. The decision was made to conduct flight 3 without corrective action and troubleshoot the system after the flight test. This anomaly is discussed further in paragraph 6.7.

c. Interference on wideband measurement channels due to keying of the Orbiter VHF transmitters was again experienced.

Third flight:

a. An aft fuselage sidewall strain gage went off-scale. The cause was found to be a failed amplifier. The amplifier was replaced.

b. The ammonia evaporator discharge temperature measurement failed. The cause was found to be a defective splice. The splice was repaired.

c. Four accelerometers associated with auxiliary power unit 1 provided erratic vibration data. Loose connectors were found on two of the triaxial accelerometers (x and y axes) mounted between auxiliary power units 1 and 2. The connectors were tightened and secured. Corrective actions taken for the other two (biaxial accelerometers mounted on auxiliary power unit 1) consisted of replacing the transducer, charge amplifier, and coaxial cable (x-axis) and installing a new lead (y-axis).

d. An auxiliary power unit 1 exhaust gas temperature measurement failed. This anomaly is discussed in paragraph 6.9.

3.5.3 Communications and Tracking

During the first flight, several error messages involving the TACAN and microwave landing systems were displayed to the crew. These error messages resulted from redundancy management limits being exceeded with all existing only over short time periods. The messages were encountered during unfavorable vehicle attitudes during takeoff and inflight maneuvers. The error messages were all cleared and normal system operation was experienced thereafter.

The communications and tracking equipment performed normally on the second flight except for lack of balance between the intercom and UHF audio levels and two redundancy management microwave landing system alarms that occurred during the autoland fly-through. The audio system was rebalanced by reducing the carrier aircraft UHF gain and lowering the Orbiter receiver levels by internal adjustment. The two redundancy management alarms for the microwave

landing system were due to system 3 azimuth data exceeding redundancy management limits. Special microwave landing system sequences were defined for the captive-active flight 3 autoland fly-through phase. Crew procedures were developed to detune or deselect the microwave landing systems should the error messages reoccur on free flights.

The communication and tracking system experienced the following problems during the third flight:

a. As on the previous flight, the UHF audio level was low and the carrier UHF hardline level continued to be too high. However, some improvement was noted. The levels were further readjusted and verified with the crews in preparation for free flight.

b. There was an intermittent condition of low volume on the Pilot's intercom. This condition cleared itself prior to takeoff and was satisfactory throughout the flight. Although the problem could not be duplicated postflight, the government-furnished-equipment audio panel was replaced and the system reverified.

c. Three TACAN bearing error messages were generated by the redundancy management software. The first message was caused by flying through the Edwards cone of confusion and/or flying away from the station such that shielding of the antenna occurred. The second message was caused by an intermittent condition in string-3 hardware (switches, multiplexer/demultiplexer, data buses, etc.) or having two units tuned to station 111 and the third unit tuned to station 3 as the data indicates. Having non-co-channel units would cause an error message. The third message was caused by flying due south of the Palmdale station. Differencing bearing data which fluctuates around 0° and 360° would cause an error message if the condition existed for 12 seconds.

Corrective action to be taken for free flight is in two parts. First, a station schedule for flight will prevent flying through a station cone of confusion, flying away from a station, and flying due south of a station. Second, the crew will procedurally select all three TACAN's for redundancy management in flight. They will select only one unit prior to separation using the other two for data acquisition only.

3.5.4 Data Processing System Hardware

All data processing system hardware performed satisfactorily except that computer 3 stopped executing during the countdown for the attempted first flight on June 17. Computer 3 was voted out of the redundant set of computers approximately 2 hours after successfully going into the flight operations sequence. A new computer was installed in the vehicle for the flight on June 18.

The failed unit performed normally during subsequent bench testing. The central processing unit and input/output processor were returned to the vendor for inspection, cleaning, and further testing (thermal cycling and vibration) but the problem was never duplicated. (This is discussed further in par. 6.6.) The units subsequently passed acceptance tests and were returned to Palmdale as Orbiter 101 spares.

3.5.5 Flight Control System

The flight control system performed normally and the preflight and inflight checks were accomplished as planned.

During the inflight tests accomplished on the first flight, the Orbiter flight control system demonstrated stable response under all conditions. The control stick steering stability and polarity checks were satisfactory. The amplitude of the flight control system command signals forward of the position limits were in agreement with expected outputs and the polarities of the surface movements were consistent with the 747 maneuver inputs.

Accelerometer data obtained during the first flight revealed oscillatory motion of elevon trailing edges of approximately 16 hertz. However, analysis of the wideband elevon actuator data shows no significant oscillatory motion. Thus, the motion sensed is due to the structural bending of the wing and control surfaces and/or mechanical free-play.

The crew expressed some concern about elevon drift when in the control stick steering flight control mode. Detailed data review was performed to ascertain when the drift occurred and to understand the cause of the drift. This review disclosed that elevon surface drifting in control stick steering was evident during pre-takeoff open-limit testing and is expected. When in preseparation and the control stick steering mode, the elevons hold at the de-trim value established prior to entering the control stick steering mode. Drifting of the surfaces in the control stick steering mode with separation in effect is unique to ground testing and will not occur in free flight when vehicle dynamics are closed through the rate gyro sensors.

3.5.6 Guidance, Navigation and Control Hardware

During prelfight checks on June 17, inertial measurement unit 1 failed to respond to the computer-issued operate command. This anomaly had been experienced previously for this "position." A procedure to recycle the operate command had been successful at bringing the unit up on previous occurrences; however, this procedure was tried twice with no response. The unit was placed in standby and the decision was made to fly on June 18 with only units 2 and 3. The unit was removed from Orbiter 101 prior to the second flight and was shipped to the Avionics Development Laboratory where the failure was confirmed. This anomaly is discussed further in paragraph 6.5.

All equipment in the guidance, navigation and control system performed well during the captive-active flights. System performance during the autoland flythrough on the second flight was very close to predicted. The pitch guidance command at pushover began close to the predicted positive value, and swept through the linear range of operation and saturated at the correct negative value (minus 1.0 g) as the carrier aircraft flew through the guidance reference trajectory. The roll guidance command at pushover began close to the predicted negative value and swept through zero to the correct positive limit of 90° as the carrier aircraft crossed the centerline of the runway. The flight data have been analyzed and these guidance commands have been found to be consistent

with the navigated state and smooth after microwave landing system acquisition. During the crew debriefing, both crewmen commented that the attitude director indicator needles were steady and free of jumps or oscillations during the fly-through.

A built-in-test-equipment (BITE) fail indication was observed on inertial measurement unit 2 on the second flight. Subsequent analysis has determined that this BITE indication was due to a difference in priorities allocated to two of the software modules during ground checkout and a miscompare resulted. During flight, both modules are assigned the same priority and a miscompare will not result, although it is possible for the BITE indication to be carried over from the ground program to the flight program. Corrective action is not required for the Approach and Landing Test Program. This situation will be corrected for Orbiter 102.

During the third flight, the air data probes were stowed and redeployed with no problems.

3.5.7 Displays and Controls

Displays and controls performance was nominal with the following exceptions.

First flight:

During preflight checks of the Pilot's speed brake hand controller, no commands were observed in the backup flight control system. The Commander's controller operated properly. Data review and circuit analysis revealed that the speed brake command measurement actually represents the speed brake position feedback until the backup flight control system is engaged with the hydraulic system activated, at which time the measurement represents the command position. Since the backup flight control system was not engaged, the measurement was properly indicating the position of the speed brake. The operation of the speed brake command measurement is consistent with the software coding in general-purpose computer 5.

Second flight:

a. The attitude director indicator failed during the final approach turn before landing. Subsequent testing in the Orbiter verified the failure. The indicator was replaced and the failed unit was returned to the vendor where detailed troubleshooting was performed. This problem is discussed further in paragraph 6.3.

b. The redundancy management alert message "HSI TRANS SW R" (horizontal situation indicator transition switch - right) was exhibited on the Pilot's display. Investigation revealed that there are other panel switches in the Orbiter that could give similar redundancy management alert messages and that the software lacks filtering for signal recognition of switching transitions; i.e., there are no fail counters to limit momentary alerts. This condition is understood, considered a nuisance factor, and corrective action is not required for the Approach

and Landing Test Program. If these alert messages are displayed on future approach and landing flights, they can be removed from the display by inserting "message reset" with the keyboard.

Third Flight:

a. The crew reported "glitches" on both horizontal situation indicators during taxi. The heading card and bearing needles were reported to jump by 30° or 40° but would then return to normal. Review of data indicated the transients were unrelated. The heading card glitches are the result of a software singularity problem and a first-order hold smoothing technique. The bearing needle glitches were the result of bad TACAN data caused by temporary loss of lock conditions. Transients can be expected if the signal is on the verge of losing lock or when good data is reacquired after a loss of lock. The heading card problem has been corrected in the Orbital Flight Test software.

b. The altitude rate meter was reported to be erratic by as much as ± 20 ft/sec whenever the air data select switch was not in the computer position. This is a known problem. The pressure data from the left or right air data probe, which is used to compute altitude rate, is inherently noisy. A program decision was made earlier to take no corrective action for the Approach and Landing Test Program. A different algorithm is being used for the Orbital Flight Test Program which should minimize the noise.

3.5.8 Flight Software

Flight software performance was nominal with the following exceptions.

On the first flight, the central processing unit utilization varied from 75 to 93 percent and one occurrence of greater than 95 percent (a 1-sec average) was observed. This caused a message to be displayed to the crew for information. Several computer functions were being performed simultaneously. The occurrence of this message was anticipated and action was initiated to delete this message from the free flight software programs.

During preflight operations for the third flight, a GPC RM miscompare (computer redundancy management voter miscompare) occurred while in operation sequence 1. Each computer compares the command output words from each of the other computers and any miscompares are annunciated. This was a single occurrence and no further problems were noted. A second problem occurred during flight. At 15:28:30, all computers in the prime set indicated five attempts to take the square root of a negative number. These were routine return errors that occurred at approximately the same time that the TACAN data were noisy due to loss of lock. The computer attempts to display horizontal situation indicator data and will do so as long as a valid channel is selected. It is possible that noisy data will cause the computer to attempt to take the square root of a negative number, resulting in an error message. A possible corrective action being considered for Orbital Flight Test is to verify that data are valid in addition to having a valid channel selected. This would eliminate the error conditions.

3.6 ENVIRONMENTAL CONTROL AND LIFE SUPPORT SUBSYSTEM

Comparison of data from the first flight with the math model predictions indicates a lower-than-expected cabin, avionics, and total heat load. This was attributed, in part, to a lower-than-predicted electrical power load in the Orbiter. The average total heat load was approximately 65 000 Btu/hr. The lower heat load also resulted in a lower-than-predicted ammonia consumable usage of approximately 120 lb/hr, average.

The performance of the subsystem was normal with the following exceptions.

First flight:

a. The freon coolant pump 1 inlet pressure transducer was inoperative throughout the flight.

b. Because of a ground closeout error, a ground-support-equipment seal was not removed, preventing the cabin vent valve from functioning. The crew actuated the ram air valve to vent the cabin during ascent and again to repressurize the cabin during descent. The maximum differential negative cabin pressure during descent was 0.42 lb/in^2 which was well below the maximum allowable differential negative differential pressure of 2.0 lb/in^2.

Second flight:

a. During ammonia system B startup at 13:29, the primary controller undershot the heat sink outlet temperature control band, which created an automatic primary control system shutdown. The secondary controller automatically activated and returned the freon coolant loop temperature to the required temperature within 67 seconds. The crew subsequently reconfigured the system to use the primary controller and no additional problems occurred.

b. Postflight evalutation of the data obtained during the separation data run, autoland flythrough, and at landing indicates that a short-term transient condition caused ammonia flow to the ammonia boiler to be abnormal. A 2° to 6° F temperature rise in both freon control loops resulted during these periods, although no effect on interfacing systems was observed. Full temperature recovery occurred within approximately 10 seconds following the incident. This phenomenon is being investigated to determine the cause.

c. Both freon coolant loop pump inlet pressures were erratic during the flight. The freon coolant loop 1 pump inlet pressure transducer which had been inoperative during the first flight returned to normal prior to takeoff and remained accurate for much of the flight. The freon coolant loop 2 pump inlet pressure became erratic during takeoff but returned to normal for the remainder of the flight.

The reduced data for the environmental control and life support subsystem compared favorably with predicted results in all but one area. The heat rejected to the freon coolant loop by the fuel cell heat exchanger was only approximately 50 percent of that expected at the measured fuel cell power. Analysis has been initiated to determine the reason for this discrepancy.

3.7 AERODYNAMICS

The primary separation parameters analyzed for the second flight were relative normal load factor and Orbiter pitch acceleration. For the Orbiter elevon deflection setting of 0° and the initialization load for free flight 1 separation, the results were as follows.

	Relative normal load factor, g	Pitch acceleration, deg/sec^2
Preflight prediction	0.93	1.3
Postflight data analysis	0.84	3.9

These values are within the acceptable limits as shown in figure 3-2.

Elevon effectiveness was required from this flight to determine the elevon deflection setting for free flight 3, aft Orbiter center of gravity. Settings of 0, plus 1.5 and minus 1.5 degrees were commanded. The mated Orbiter aerodynamics are shown in figure 3-3. The slope of the curve pitching moment coefficient versus elevon deflection indicates that the elevon effectiveness agrees with preflight predictions. Also to be noted in figure 3-3 is the shift between preflight predictions and test data. This shift amounts to an elevon deflection of approximately minus 1.0 degree (i.e., indicated elevon deflection = 0° but actual elevon deflection = minus 1°). A bias as large as minus 0.7° exists based on factory checkout. Coupled with elevon warpage found during inert flight measurements, the bias could easily amount to minus 1°. The elevon bias effect on Orbiter relative normal load factor and pitch acceleration is apparent in figure 3-4.

The mated carrier aerodynamic data, figure 3-5, has the same elevon deflection bias, though it is not as obvious. Lift coefficient and drag coefficient for the carrier aircraft are not affected by the Orbiter elevon setting. The carrier aircraft pitching moment coefficient would be shifted by minus 0.014 for minus 1° Orbiter elevon bias. This difference added to the preflight predictions would bring it into good agreement with the flight data.

The apparent non-linearity of the carrier pitching moment with Orbiter elevon deflection is due to the Pilot's trimming the mated vehicle.

No change will be made to the planned separation elevon setting for free flight 1 since the biased elevon gives acceptable separation conditions.

The final analysis will consider thermal effects on the load cell measurements; however, based on past experience, the data will be negligibly affected.

Conditions at separation data run:

Orbiter tail cone on
Orbiter weight, lb = 150 000
Orbiter c. g., x-axis, percent = 63.8
Orbiter elevon deflection, deg = 0
Orbiter/carrier aircraft incidence angle, deg = 6
Velocity, knots equivalent air speed = 270

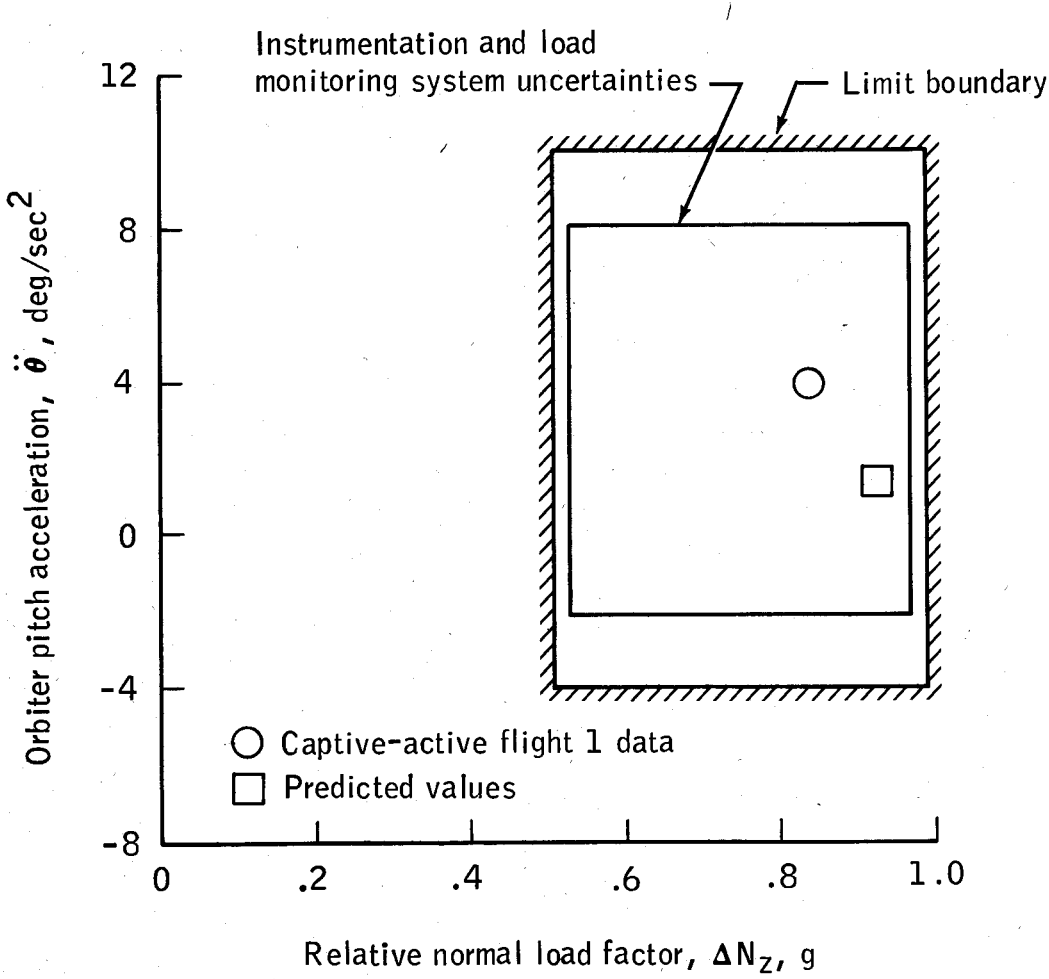

Figure 3-2.- Seperation target conditions.

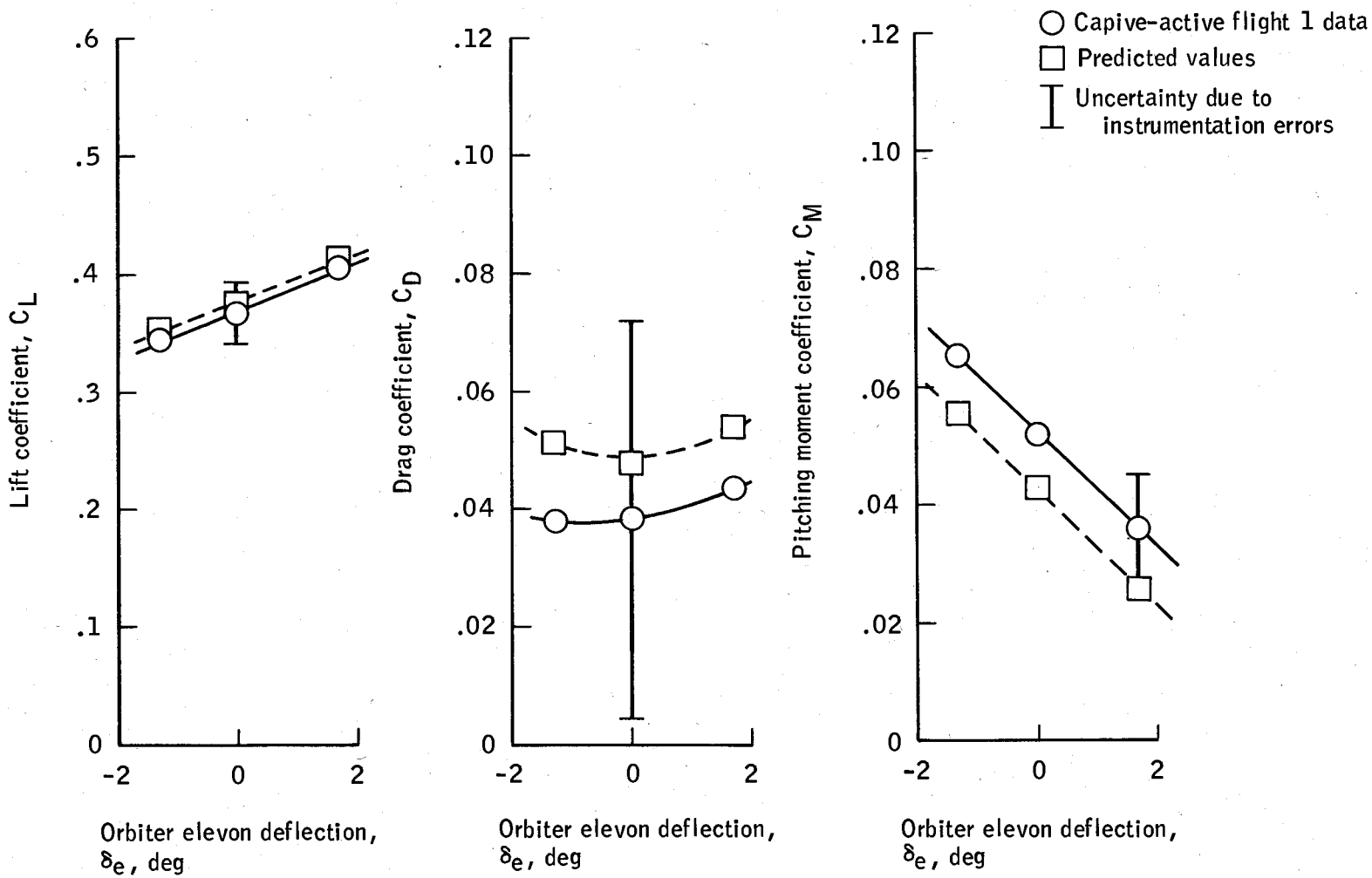

Figure 3-3.- Orbiter coefficients versus elevon deflection

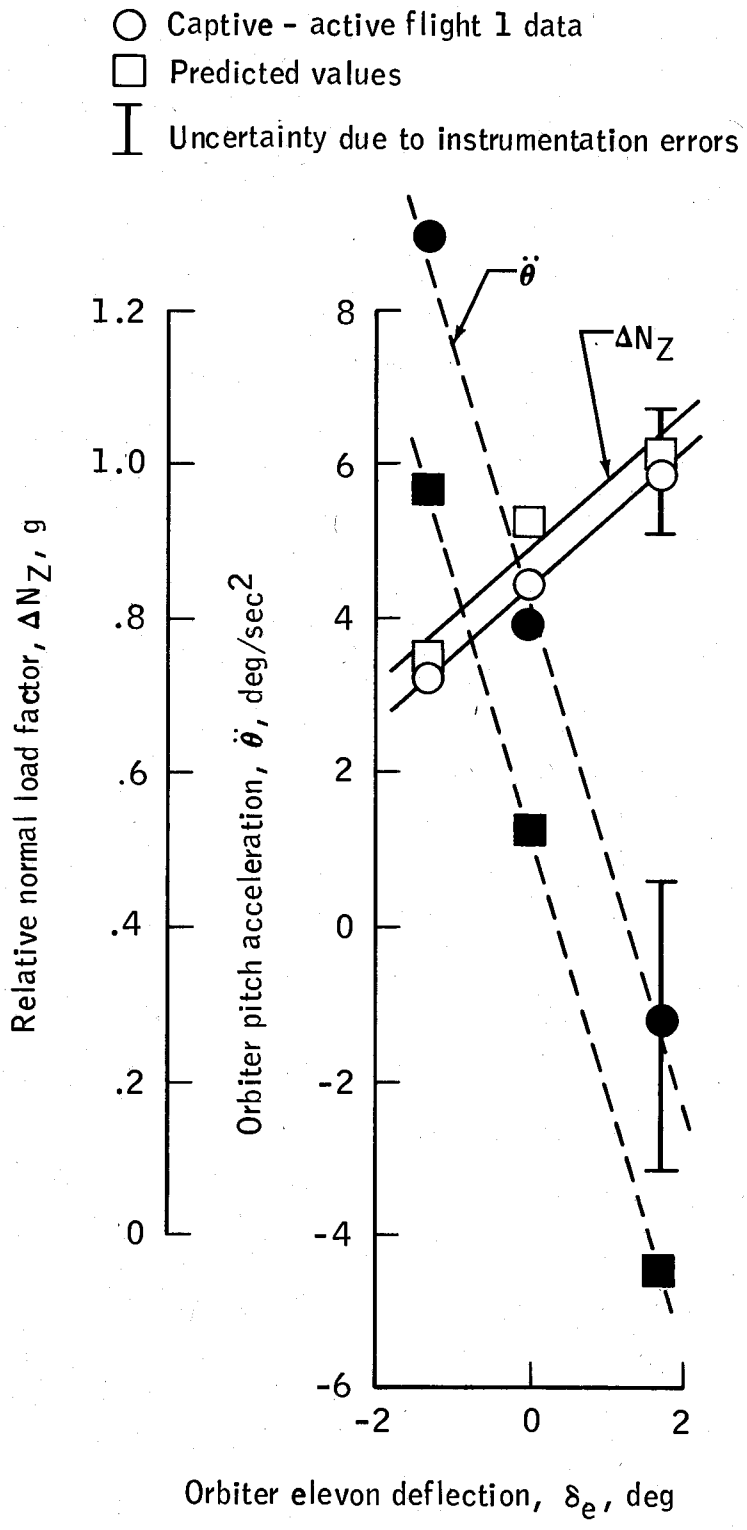

Figure 3-4.- Elevon bias effect on orbiter pitch acceleration and relative normal load factor.

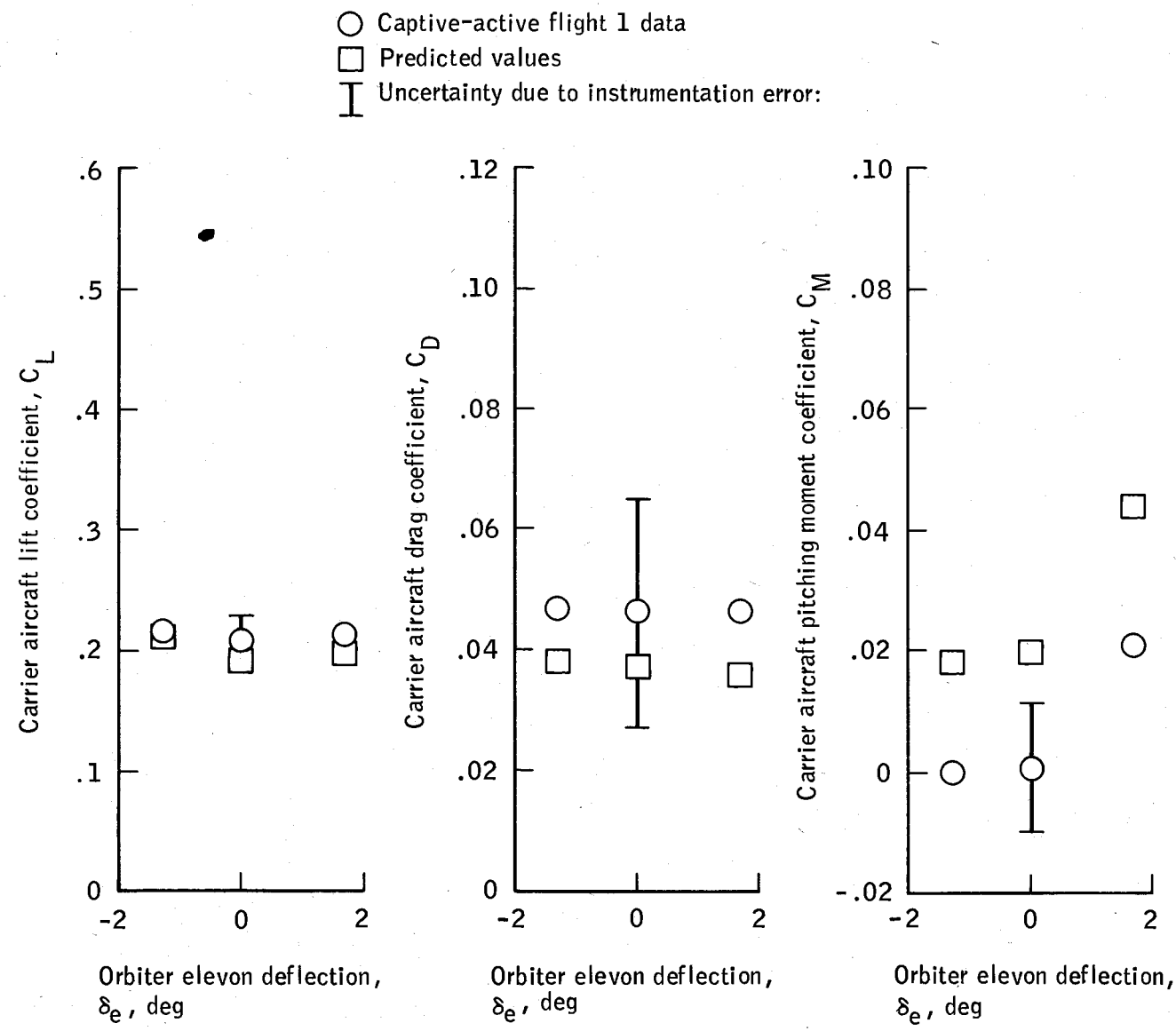

Figure 3-5.- Carrier aircraft coefficients versus orbiter elevon deflection.

The results of the separation profile for the third flight are in agreement with those from the second flight (0° elevon setting). The relative normal load factor was approximately 0.9 g and the Orbiter pitch acceleration was approximately 4 deg/sec^2. Based on carrier aircraft altimeter data, the altitude at pitchover was 28 660 feet MSL (30 250 feet MSL based on C-band radar data) and at launch ready it was 24 900 feet MSL (25 620 feet MSL based on C-band radar data). The airspeed at launch ready was 271 knots and the pitch attitude was minus 5°.

Based on results from captive-active flights, the separation conditions planned for free flight 1 are acceptable.

3.8 GOVERNMENT-FURNISHED EQUIPMENT

The crew-related government-furnished equipment performed satisfactorily except that the film in cabin data acquisition camera 1 broke during the first flight after only 75 feet of the available 400 feet had been exposed. The apparent cause of the failure was the "softness" of the black-and-white film coating which resulted in debris build-up in critical clearance areas of the film transporter spiral ramp and subsequent binding of the film. The camera was loaded with color film for the second flight. Color film has a harder coating than black-and-white film and the debris build-up in critical clearance areas of the film transporter ramp did not occur. For the third flight, black and white film was again used because the preinstallation acceptance testing procedures had been changed and better resolution could be obtained.

Figure 4-1.- Flight crews.

Left to right: Thomas C. McMurtry, carrier aircraft Copilot, all flights; Victor W. Horton, carrier aircraft Flight Engineer, first and third flights; Fitzhugh L. Fulton, Jr., carrier aircraft Captain, all flights; Joe H. Engle, Orbiter Commander, second flight; Richard H. Truly, Orbiter Pilot, second flight; Charles G. Fullerton, Orbiter Pilot, first and third flights; and Fred W. Haise, Jr., Orbiter Commander, first and third flights. Missing from photograph: Louis E. Guidry, carrier aircraft Flight Engineer, first and second flights; William R. Young, carrier aircraft Flight Engineer, second flight; and Vincent A. Alvarez, carrier aircraft Flight Engineer, third flight.

4.0 PILOT'S REPORTS

The following are the Orbiter crew reports of the three manned captive-active flights. Crewmembers for the Orbiter and carrier aircraft are shown in figure 4-1. The details presented are a composite of extractions from inflight notes, data cards, and onboard voice tapes. The preflight, flight, and postflight events are described chronologically with general comments and recommendations at the end. Underlined titles (e.g., FCS MODE SWITCH CHECK) refer to blocks of procedures contained in the integrated flight checklist. Acronyms and abbreviations that are used for integrated flight checklist titles, cathode ray tube displays, and switch positions are defined at the end of this section. Altitudes are carrier aircraft altimeter altitudes above ground level.

4.1 FIRST FLIGHT

4.1.1 Crew Ingress to Backout From Mate/Demate Device

Both crewmen departed trailer 5 for the vehicle at 12:50, although the contractor test conductor advised that the closeout crew was ready to support only the Commander's ingress. The Commander proceeded immediately to the upper crew compartment and accomplished normal ingress procedures including establishing air-to-ground communications with the NASA test conductor and the Houston mission control center. The alternate Pilot, who had accomplished the preflight switch list, remained in the right seat to support data processing subsystem reconfiguration after operational sequence 2 transition, which somewhat delayed ingress for the Pilot. However, the Pilot's ingress was completed 1 hour and 35 minutes prior to scheduled takeoff, allowing adequate time to support all checklist activities. (See recommendation 1.)

Two minor test-checkout procedure discrepancies were noted. At ingress, DISP 221, NAV-TARGET UPDATE, was called on the left hand cathode ray tube display (CRT 1). This format must be called as SPEC 221 in order for data to be updated. It was not clear why this display was required at all during this period of time. The second discrepancy was that the integrated checklist called for verification of FUEL CELL HPG MANF ISOL/CRSFD VLF, (FOUR) - OPEN, (tb - gray) which was never called by the contractor test conductor.

At crew ingress, the vehicle configuration was nominal with the exceptions of inertial measurement unit 1 failed (ref. par. 6.5), a piece of green (nominal range) tape missing from the FUEL CELL STACK COOLANT TEMP meter, and the previously noted static SPEC 221 on CRT 1.

The cabin temperature seemed a little on the warm side, possibly due to added workload getting strapped into the ejection seat. It seemed to cool down after hatch closure.

AMMONIA SYSTEM ACTIVATION and HPGS SWITCHOVER were nominal as well as GSE POLL TERMINATE. The MID DECK FLOODS circuit breakers were pulled at contractor test conductor's direction after the closeout crew had completed their duties.

The BENCHMARK UPDATE, which was to have been performed 1 hour and 10 minutes prior to scheduled takeoff, was delayed 17 minutes. It appeared that the state vector had deteriorated significantly since the previous update prior to crew ingress. Readings with the AIR DATA SELECT switch in CMPTR were velocity 8 KEAS and altitude full-scale high (165 n. mi.).

In the period just prior to backout from the mate/demate device, a ground technician that was stationed by the nose boom to assure clearance of the angle-of-attack vane by the mate/demate device structure was observed to cover his nose with a handkerchief shortly before the carrier aircraft crew reported smelling ammonia.

4.1.2 Backout From Mate/Demate Device To Takeoff

As the mated vehicles were pushed away from the mate/demate device structure, the sense of height above the ground increased. This was enhanced by the clear view of passing buildings, trailers, vehicles, and personnel. Vehicle motion was relatively smooth under tractor tow. There was a very small lateral motion and a barely perceptible "square tire" effect noticed on the carrier aircraft.

In the process of backing out and turning to proceed up the taxiway, several TACAN RM alarms were encountered. The first was a TACAN 2 RM noted 53 minutes prior to scheduled takeoff with a "↓" by azimuth and automatic deselection. After following the malfunction procedure to a conclusion block indicating a transient, it was reselected 6 minutes later. This was followed by a TACAN 1 RM, "↓" azimuth, and automatic deselection 40 minutes prior to takeoff. Shortly thereafter, there was a TACAN RM message with no "↓'s" nor deselections (dilemma case). To prevent further false alarms, the redundancy management status was left alone. On the latter alarms, a phenomenon was noted on SPEC 201 that is pertinent to the problem. Rather than the TACAN antenna that was being blanked as a result of vehicle geometry simply commfaulting, it would momentarily provide an erroneous and large delta azimuth reading. This would remain long enough to latch RM and then change to "M's." After a subsequent lockup, the data would all compare again. (See recommendation 2.)

The COMM CHECK, performed 45 minutes prior to scheduled takeoff, was acceptable for all modes. The mission control center call through the carrier aircraft receiver on the 279.0 MHz frequency was clear but not loud compared to very-loud-and-clear reception on the Orbiter receivers.

Vibration from the carrier aircraft engine start was detected. Vehicle motion while taxiing under carrier aircraft power increased both laterally and in the normal axis with a noticeable "square tire" effect. The taxiway appeared abnormally narrow from the Orbiter vantage point.

From onboard, the FCS MODE SWITCH CHECK and the TRIM AND PLT FCS COMMAND CHECKS were nominal. The Pilot's speed brake check was repeated per request from the mission control center. (See par. 3.5.7.) The onboard readouts of speed brake controller transducers and speed brake takeover switch contacts appeared normal.

Ejection seat pins were removed easily and stowed in the crew's flight suit pockets.

TACAN 1 was reselected 16 minutes prior to scheduled takeoff and no further redundancy management alarms occurred. A simple reselect was accomplished instead of the long 1-2-3 deselect followed by 1-2-3-2-1 reselect, so, possibly, the redundancy management logic was not reinitialized.

The AMMONIA SYSTEM B ACT, OPEN FCS LIMITS, ADC ACTIVATION, APU/HYD 2 and 3 ACT, PITCH TRIM, and MAJOR MODE CHANGE were nominal per the checklist. The UPDATE ALTIMETER SETTINGS had been accomplished earlier than indicated in the checklist, immediately after Edwards tower passed it to the carrier aircraft. The backup altimeter was much steadier than the one in the Orbiter aeroflight simulator, which incessantly bounces plus and minus 20 feet.

The elevons did not noticeably jump when hydraulic pressure came up, and they were trimmed to zero by the completion of the auxiliary power unit 3 startup sequence.

Just prior to the FCS CSS MODE CHECK, a master alarm, an AIR DATA RM 2 message, a T_t (total temperature) "↓" indication, and automatic deselection were encountered. Air data transducer assembly 2 total temperature on SPEC 301 was 23° versus 34° C on the left probe. (See recommendation 2.)

Several oscillations, about 1 second in duration, were felt after the pitch CSS MODE CHECK raps. The same effect at a lower amplitude was felt with the lateral raps and nothing was detected with the rudder inputs.

Another AIR DATA RM message followed the CSS MODE CHECK, this one for air data transducer assembly 4, and also for total temperature outside redundancy management tracking limits. It was also automatically deselected. (See recommendation 2.)

The surface "racheting" felt during the Commander's PREFLIGHT FCS CHECK was like that experienced during ground tests in the hangar at Edwards or in the mate/demate device. The "rumbling" effect was not detected. Four FCS SATURATION C&W alarms were incurred due to control inputs as well as the elevons drifting down to their lower limits. The drift rate was slow and always in an elevon-down direction. (See par. 3.5.5).

In checking the string-4 feedbacks on SPEC 321, all compared exactly with the exception of the speed brake which was 5.1 versus 4.9 or 5.0 on the other strings.

Just before the MAJOR MODE CHANGE a master alarm with an MLS RM message and automatic deselection occurred. The mode change was executed normally. The elevons were manually positioned close to zero prior to moding from OPS-205 back to OPS-201 to prevent a large surface transient. Subsequently, another master alarm with an MLS RM message and no "↓" symbol (dilemma case) occurred. (See recommendation 2.)

A BENCHMARK UPDATE for active runway 22 was executed and reported to the mission control center. The carrier aircraft crew also reported that they had takeoff clearance and requested clearance to taxi from mission control. There was some confusion about the reason for a delayed response from Houston at this point. A subsequent call was made to advise of the benchmark completion fearing that the previous transmission had been missed. The Pilot delayed the FLIGHT CONTROL LIMIT CHECK at this point to avoid interrupting the expected call from Houston to the carrier aircraft. (See recommendation 3.)

The FLIGHT CONTROL LIMIT CHECK was nominal when executed about 4 minutes prior to scheduled takeoff. Houston requested reselection of air data transducer assemblies 2 and 4 at about the same time. Initial attempts by the Commander on ITEM 41 and 43 were unsuccessful resulting in ILLEGAL ENTRY SYNTAX error messages. Subsequently, it was noted that SPEC 301 had been called as a display rather than a specialist function. The requested procedure still was unsuccessful on the properly called SPEC 301 because the total temperature was still beyond the redundancy management tracking limits. The net result was that each reselection was followed shortly by an automatic deselection. (See recommendation 2.)

Just prior to takeoff, the FAULT PAGE was recorded before executing DISP 051 PRO. The listing included 12 messages:

AIR DATA RM
AIR DATA RM
FCS SATURATION
FCS SATURATION
FCS SATURATION
FCS SATURATION
AIR DATA RM
BDY FLP VLV RM
BDY FLP VLV RM
TACAN RM
TACAN RM
TACAN RM

4.1.3 Takeoff

Takeoff roll was commenced at 15:06. The acceleration seemed surprisingly slower than expected, and the illusion of slow speed became more apparent going down the runway. The motion was increased with velocity, particularly in the degree of lateral forces felt. During the roll, a reading with the AIR DATA switch in CMPTR indicated 60 knots and minus 790 feet altitude. The rotation was made at 140 knots on the Commander's left probe readout to an initial pitch angle (θ) of 17° on the attitude director indicator. It qualitatively looked like 70 knots out the window at this point. The angle slowly increased to 20° which placed the lower window frame on the horizon.

4.1.4 Flight Phase

The carrier aircraft post-takeoff configuration changes (gear and flaps) were not noticed in the Orbiter.

A background low frequency roar was noted shortly after takeoff. The roar remained at the same relative intensity until landing. It was attributed to aerodynamics but had no particular directional reference. At this point, the master volume and intercom controls were increased from the 12 o'clock to the 3 o'clock positions to accommodate the increased crew cabin noise level. The auxiliary power unit whine, which could be heard on the ground, was masked by the aerodynamic airframe noise.

The CABIN VENT and WIDEBAND RECORDER checklist items were accomplished on time. The mission control center reported no cabin pressure decay and requested use of the RAM AIR switch. The CABIN VENT MnA circuit breaker on instrument panel L4 was verified closed and upon query of the mission control center the CABIN VENT switch was placed to CLOSE. A very noticeable "whoosh" of air followed by a throaty roar accompanied placing the RAM AIR switch to OPEN. There did not appear to be a great deal of air motion around the crew cabin. As a result of the cabin pressure problem, the FCS DIRECT MODE TEST was delayed for about 6 minutes to 12 minutes after takeoff. The test was nominal. With 5° rudder, a reading of 1° β (sideslip) was noted. The carrier aircraft crew reported that the ball was about 1/8 out of center on the needle-ball instrument.

Because of communications interference problems and a misunderstanding relative to the reselection of TACANs, the NAVIGATION FILTER TACAN and BARO TO AUTO checklist steps were slightly delayed. Approaching the eastern end of the racetrack, the communications interference increased. The initial suspicion onboard was that the intercom was receiving bleed-through from the TACAN receivers since a Morse code identifier was detected. Then unintelligible voice was heard. The Pilot coordinated with the mission control center to alternately turn off UHF channels 1 and 2 but there was no effect. In the turn back to the west, the interference was reduced significantly.

The FLUTTER TEST was accomplished per the checklist 19 minutes after takeoff. The Orbiter inputs resulted in no detectable physiological response. By far the largest amplitude input felt in the Orbiter was the carrier aircraft lateral input. It generated a surprisingly large lateral acceleration. The pitch input response was small, and the rudder insignificant. All damped immediately. At this point, the Pilot isolated the communications interference to the 279.0 MHz frequency by pushing the SCA RCVR knob down. Houston concurred on turning off the SCA UHF radio transmitting on 279.0 MHz. (See recommendation 4.) Throughout the remainder of the flight, UHF radio reception from all sources was excellent.

The SPEED BRAKE TEST was commenced 23 minutes after takeoff. Buffet onset was noted as the speed brake opened beyond 25 percent. Buffet level was light at 60 percent. Out to 80 percent speed brake, the buffet level increased very slightly (approximately 10 percent), and no increase was noted with further opening to 100 percent. At each point, the 5° rudder input had no effect on the buffet level or vehicle dynamics. The drives of both the speed brake and rudder were smooth in both directions. In the midst of this test, a master alarm and MLS RM message occurred. The vehicle was located due north of lakebed (Rogers Lake) runway 17 and within the microwave landing system ground station cone at the time.

Auxiliary power unit 1 was activated immediately after completion of the SPEED BRAKE TEST. After starting, while still in the low-pressure mode, hydraulic system 1 indicated 800 psi. It was placed in normal pressure and all parameters were within normal limits.

The software was moded to major mode 202 (separation), and the CSS STABILITY AND POLARITY CHECK was begun. The initial series of control inputs in which the pitch axis was in CSS (control stick steering) and the roll/yaw axis was in DIRECT was completed. At this time Houston reported they had loss of data, so the cameras and wideband recorder were turned off and the test was delayed until completion of the 180° turn at the western end of the ground track. After completing the turn and reestablishing the S-band data link, the cameras and wideband recorder were turned on, and the complete CSS STABILITY AND POLARITY CHECK was accomplished, starting at the beginning. Inputs in all axes appeared to damp immediately after the control input was made. No "racheting" or "rumbling" were observed. Between pitch inputs, it was necessary to trim the elevon back to zero.

The carrier aircraft then followed with his pitch, roll, and yaw inputs. Rates were observed on the attitude director indicator rate indicators during the carrier aircraft pitch maneuver of ± 1° per second, and in roll from 4° to 5° per second. During the sideslips, approximately 1-1/2° sideslip angle was observed on the nose boom beta indicator. During the first sideslip, accomplished with left rudder, the left air data probe airspeed increased from 176 to 183 knots. Also, it was noticed that the Orbiter nose boom began to oscillate through an amplitude of approximately 3 to 4 inches at the tip. This oscillation was photographed with a brief run of camera 3.

Approximately 34 minutes after takeoff, a comparison was made of the left probe, right probe, computer, and nose boom angle-of-attack indications with the following result.

AIR DATA PROBE LEFT	13.0°
AIR DATA PROBE RIGHT	13.0°
COMPUTER	13.8°
NOSE BOOM	15.0°

SPEC 321 was called, and the string-4 feedbacks were checked and appeared to be in perfect agreement with the other three strings on all surfaces.

Just as the aircraft started to turn southbound from the eastbound track, a GPC CPU 1 message appeared. Its appearance did not seem to be associated with any particular data processing subsystem activity or any keystroke inputs.

During a short southbound descending leg aimed at the planned landing site, the microwave landing system (MLS) reception was checked. Both horizontal situation indicators were selected to MLS source, and SPEC 201 was called to check the microwave landing system data. All receivers appeared to be locked up solid with the data exactly the same on all three. The horizontal situation indicators were also checked, in both the terminal area energy management (TAEM) and APPROACH modes, and in TACAN, CMPTR, AND MLS sources. All data appeared to be reasonable considering the position with respect to the landing site, and the various sources compared as closely as could be determined by the precision of the horizontal situation indicator.

The ram air valve was opened 50 minutes into the flight in response to a call from the mission control center and caused a loud "whoosh" of air that fluttered checklist pages and raised some residual dust from the cockpit surfaces. The in-flow lasted for approximately 5 seconds and then dropped to no noticeable air movement. While the ram air valve was open, there was a moderately loud, waivering roar which necessitated turning up the intercom master volume in order to have comfortable intercom. It would have been difficult to talk without the use of the intercom under the noise conditions.

The mission control center called and canceled the planned STATE VECTOR UPDATE. There was no change in the takeoff altimeter setting of 29.96, so neither the primary navigation system nor the backup altimeter were adjusted.

The configuration changes made by the carrier aircraft to prepare for landing were not detectable in the Orbiter. On final approach, the primary system airspeed indication was 155 knots. The vehicles appeared to stay on the nominal visual approach slope indicator glideslope all the way down until final flare. Landing winds were reported to be 200° at 10 knots. Touchdown was very smooth, just barely detectable, and no longitudinal deceleration was felt until about 60 knots when a very slight braking effect was noticed.

The ram air valve was closed during the ground roll which caused the cabin to lock up at a slight positive pressure with respect to ambient. This was noticed later when the hatch was opened.

4.1.5 Postflight

The vehicles were parked just off the far western end of the main base runway and the postflight procedures were accomplished. The wideband recorder automatic calibration was done just prior to the wideband tape running out so that the auxiliary power unit hydraulic load tests were not recorded on the wideband tape. It was also noticed at this time that camera 1 was showing a steady green light.

APU LOAD TEST AND DEACTIVATION was accomplished per the checklist. The only off-nominal reading noticed was that hydraulic system 1 in the low-pressure mode indicated only 550 psi.

The egress radio was activated and both reception and transmission were very clear. There was no problem hearing the radio even with helmets on.

The vehicles were then taxied back to the Dryden Flight Research Center ramp. The FAULT SUMMARY PAGE was called, and the following messages which had accumulated since it had last been cleared just prior to takeoff were recorded:

FCS SATURATION	1234	16:25:50
FCS SATURATION	1234	16:24:43
FCS SATURATION	1234	16:08:50
FCS SATURATION	1234	16:08:43
FCS SATURATION	1234	16:06:51
FCS SATURATION	1234	16:06:44
FCS SATURATION	1234	16:06:28
TACAN RM	1234	15:55:29
GPC CPU	1	15:52:15
MLS RM	1234	15:33:14
MLS RM	1234	15:31:00
MLS RM	1234	15:12:41

The software was moded to OPS-zero and then all computers were powered down. After some delay, clearance was received from the NASA test director at Palmdale to complete the Orbiter power-down procedure. As the vehicle was powered down, the contrast in the ambient noise level from that with all the various fans running to almost total silence as the last bus was killed was very noticeable.

Seat egress, protective breathing system donning, and air sample bottle operation were all nominal. The protective breathing system face masks were donned and put to purge mode. Contact was made with the ground crew waiting outside in the snorkel basket via the egress radio by holding the microphone of the radio against the glass of the face mask. Communication was surprisingly clear in this mode. The ground crew operated the hatch handle to the vent position which resulted in about a 5-second outflow of air, after which the hatch was completely opened.

It was necessary to get down on hands and knees to board the snorkel basket which has a railing about 3-1/2 feet above the basket floor. The unsteady nature of the snorkel basket when extended to that height was disconcerting to the Commander who, unlike the Pilot, had never been in a snorkel before. The integrated checklists, kneeboard data cards, and egress radio were carried with the crew to the ground. All other equipment was left in the Orbiter cockpit. It was very crowded with both crewmen and the two snorkel operators in the basket. As a result, closing the Orbiter hatch was awkward. (See recommendation 5.)

A slow descent was made to the ground, and after walking about 100 yards away from the vehicle, the protective breathing systems were doffed.

4.1.6 General Comments

4.1.6.1 Camera Operation

The cameras were operated per the checklist with the following exceptions. On the speed brake test, camera 1 was turned off after reaching the steady-state test positions of 60, 80, and 100 percent. It was turned on during the transitions from one position to another. Camera 1 was turned off after the initial try at the CSS STABILITY AND POLARITY CHECK when it was determined that there was a data loss to the ground. It was turned back on after the turn when communications were reestablished. It was turned off after the Orbiter control inputs until the carrier aircraft began its polarity check maneuvers. During the left and right sideslip points, camera 3 was operated to photograph the nose boom oscillations. Camera 3 was turned on at 1100 feet on descent for landing and ran throughout the landing roll, and ran out of film exactly as the brakes were set after clearing the runway.

During flight, it is possible to tell if camera 1 is running by placing a finger against the light and noticing the reflection. It is difficult to tell if camera 2 is operating, and the camera 3 light is very visible as well as the film quantity remaining. Once during the flight, prior to the CSS STABILITY AND POLARITY TEST, the camera switches were inadvertently operated out of sequence which necessitated recycling the one-frame-per-second switch to re-initiate camera 1 operation.

4.1.6.2 Displays and Controls

The cathode ray tube brightness controls were set at full bright throughout the flight, and the legibility was excellent. At one point during the pretakeoff taxi, sun shafting occurred directly on the face of CRT 2, but it was still possible to read the characters by shifting one's head slightly.

The master alarm and system management alert tone volumes were adjusted properly for the normal inflight ambient noise level. However, when the ram air valve was opened, the tone level was discernible, but certainly not loud enough to be immediately obvious.

The only difficulty encountered with the cockpit displays and controls involved reading the panel 07 talkbacks. They are mounted at such an oblique angle to the normal head position that straining is required to tell if they are gray or barberpole.

All annunciator lights, including those on the glare shield panels, were readily discernible at all times.

4.1.6.3 Lighting and Visibility

All of the windows were very clean and clear, and at no time was any glare or indication of fogging noticed.

The Orbiter cockpit is relatively shady, and neither pilot used either helmet visor. None of the cockpit lights were required. Upon descending to the mid deck after landing, it was found that the ambient light level, even with the flood lights powered down, was adequate to read the checklist and accomplish the air sample procedures.

4.1.7 Recommendations

1. The alternate crew member should remain in the right seat until completion of operational sequence 2 initialization and memory dump to provide continuity in the data processing subsystem (DPS) configuration and to avoid numerous calls on air-to-ground.

2. Prevent the nuisance redundancy management alarms/messages (TACAN, MLS, AIR DATA) encountered before takeoff. Procedural workarounds should be acceptable for the Approach and Landing Test Program but software changes may be required for the Orbital Flight Test Program.

3. Add to the integrated flight checklist a requirement for the mission control center to give a "go" to the carrier aircraft for taxi into takeoff position immediately after completion of the BENCHMARK UPDATE.

4. Assure that the Miramar Naval Air Station air terminal information service does not interfere with the air-to-ground 279.0 MHz frequency.

5. Alter the crew egress snorkel operation to transfer the flight crew to the ground prior to hatch closure.

4.2 SECOND FLIGHT

4.2.1 Crew Ingress

Crew ingress was accomplished with no significant problems. The Commander's ingress was completed at 13:24 and the Pilot's ingress began thereafter. During the Pilot's ingress, there was adequate time for the Commander to verify his ingress switch list. The Pilot informally reviewed his switches but did not have time to methodically check his ingress switch list.

4.2.2 Taxi

During backout from the mate/demate device, there was no problem taking four checklist item changes called up by mission control. The COMM CHECK was made during taxi, and attempts to balance the Orbiter UHF, carrier aircraft, and intercom signals were made at this time (ref. par. 3.5.3).

Because of the temperature differential on the left and right air data probes and the resulting ADTA RM message experienced on captive-active flight 1A, air data probe temperatures were recorded periodically from carrier aircraft engine start to brake release. A high, thin cloud layer was present and apparently reduced the temperature differential of the left (sunlit) and right (shaded) probes. An interesting observation was the rapid drop and slow recovery of temperature as taxi was started and some airflow occurred across the probes.

The FCS MODE SWITCH CHECK and the TRIM AND FCS COMMAND CHECK were accomplished with no anomalies. During this time period, the Pilot executed a SPEC 301 PRO (to check air data probe temperatures) on the right keyboard, and when the PRO key was hit, a transition into major mode 202 occurred. Due to a distraction, the scratch pad line was not checked between the "1" and the "PRO" keystrokes. After some discussion (both on board and with mission control) it was concluded that the most likely explanation was that the "SPEC" keystroke had not been seen by the display electronics unit, and the "301 PRO" was recognized only as a "PRO" by the computers, which then legally transitioned from major mode 201 to 202. Since this transition was next in the checklist anyway, no further action was necessary.

Takeoff time was moved up approximately 10 minutes at this time with no impact on the Orbiter crew checklist timelines.

Ammonia system B was not activated in order to retain the capability to fly again 3 days later. Auxliiary power units 2 and 3 were started with normal indications. The PREFLIGHT FCS CHECK was performed with no problems. Light "ratcheting" was noted only when the elevons were moved from up to down. Continuous attention was required to keep the elevons from drooping beyond the deflection saturation limit while in the control stick steering mode (ref. par. 3.5.5).

4.2.3 Takeoff

Takeoff acceleration seemed normal with rotation occurring at about 130 knots. Immediately after lift-off, the continuous oscillatory motions characteristic of the flight began. These oscillations were more predominant in the lateral axis and at times caused lateral nose boom oscillations of 3 to 4 inches. The TACAN's were selected after takeoff. The cabin vent was opened at 1000 feet and the decrease in cabin pressure was felt in the ears immediately. No significant increase in cabin noise was noted after takeoff.

4.2.4 Flutter and Speed Brake Tests at 230 Knots

The 230-knot FLUTTER TEST was begun 3 minutes after takeoff at 3000 feet. Orbiter inputs consisted of a sharp full-aft and full-right rotation hand controller input and a full-right rudder input with a 10-second period between inputs. The software surface limits for this test were elevator $\pm$ 1.5°, aileron $\pm$ 1.0°, and rudder $\pm$ 5°. No response was felt from the Orbiter inputs. All three carrier aircraft inputs were felt with the lateral motion associated with the roll and yaw inputs being the most apparent. All motion responses appeared highly damped.

During the right turn, the cabin vent was closed and cabin pressure held at 10.7 lb/in^2. After rolling out on an easterly heading, the first of three air data calibrations was taken.

The 230-knot SPEED BRAKE TEST was begun 10 minutes after takeoff at an altitude of 11 000 feet. A slight increase in buffet level was noticed at about 30 to 35 percent speed brake deflection. Buffet level increased slightly as speed brakes were opened to 60 percent. No vehicle response was detected with the 5° left rudder input. As the speed brakes were opened to the 80- and 100-percent positions for data, no increase in buffet level was noticed. Buffet level was described as equivalent to light turbulence in a T-38 aircraft. Five-degree rudder deflections at the 80- and 100-percent speed brake positions gave no noticeable vehicle motions. At one point during this test, the Chase Aircraft 1 pilot called "passing through some light turbulence." Orbiter cockpit motion caused by this reported turbulence was greater in amplitude than that associated with the speed brake deflection.

When the Orbiter speed brakes were retracted from 100 percent to full-closed, the carrier aircraft rate of climb increased from zero to about 800 to 900 ft/min. At the completion of the speed brake test, the second air data calibration was taken. On this first eastbound leg, the microwave landing system attempted to lock-on while approaching the lakebed runway 17 centerline.

Auxiliary power unit 1 was started approximately 18 minutes after takeoff with normal onboard indications. A built-in-test-equipment (BITE) error on inertial measurement unit 2 was noticed on SPEC 201 about this time. Special rated thrust was begun by the carrier aircraft at 19 minutes after takeoff, and the acceleration was not noticed by the Orbiter crew. After rolling out on the westbound leg, the third air data calibration was taken.

4.2.5 Flutter and Speed Brake Tests at 270 Knots

Twenty-six minutes after takeoff, at about 20 000 feet, the 270-knot FLUTTER TEST was begun. Full-aft and right rotation hand controller and full-right rudder inputs were made in the same sequence as the inputs at 230 knots. Orbiter inputs were detectable at this speed, but no residual motion was detected and all vehicle response was highly damped. Carrier aircraft inputs were again more noticeable, particularly in the lateral axis. Residual motion from the carrier aircraft pitch input was felt for about 1-1/2 cycles and was well damped.

The 270-knot SPEED BRAKE TEST was begun 29 minutes after takeoff at 20 000 feet. A slight increase in buffet was detected at 35 to 40 percent speed brake deflection, with very little onboard indication of buffet increase out to 60 percent speed brakes. Speed brake and rudder deflection data were taken at 10 percent speed brake intervals from 60 to 100 percent. As the speed brake setting was increased above 70 percent, the buffet level seemed to decrease slightly. Qualitatively, the buffet levels for speed brake settings at 270 knots seemed to have about the same amplitude but a higher frequency than those levels at 230 knots.

After completing the speed brake test, the carrier aircraft resumed a climb schedule and began the turn to set up for the separation data run. At this time the crew noted that no TACAN loss of lock had been observed during the flight. The Pilot's horizontal situation indicator select switches were set to APPROACH/TAC/1, and in order to monitor for TACAN 2 performance, his transceiver switch was moved from 1 to 2. This action was followed almost immediately by a systems management alert tone/light and the following fault message: HSI TRANS SW INVAL R 1234 001/15:25:46. After consulting the fault message description in the Systems Reference Book and notifying mission control, the Pilot assumed that the switch had been "faulted down" to position 1 by software for the remainder of the flight. Attempts to verify this "fault down" later in the flight (by cycling the switch and observing horizontal situation indicator performance) were inconclusive (ref. sec. 6.2).

4.2.6 Separation Data Run

Pushover for the separation data run was made 43 minutes after takeoff at about 21 000 feet and was very smooth and slow. The carrier aircraft called "launch ready" 32 seconds after pushover. At 270 knots, with carrier aircraft spoilers deployed and power at idle, the horizon appeared to be about 5° to 6° above the lower front window frame. The separation data conditions were as follows.

Rotation hand controller	Elevons, deg	Data time, sec
Detent	0.0	5
Full forward	1.5 (down)	4
Full aft	1.5 (up)	7
Full right	1.0 (right)	11

Although no motions were felt when Orbiter inputs were made, adjustments to the Orbiter roll input by the carrier aircraft Pilot were felt. When data acquisition was complete, "abort separation" was called and the carrier aircraft executed a gentle recovery at about 14 000 feet.

During this run, the cockpit noise and buffet level were not a factor in crew communications or comfort.

4.2.7 Autoland Fly-Through

At approximately 17 000 feet, the carrier aircraft began a left turn to attain position for the AUTOLAND FLY-THROUGH. The fly-through was a planned traverse through the lakebed runway 17 microwave landing system beam. In addition to ground data, the fly-through allowed the Orbiter crew to monitor the attitude director indicator (guidance error needles) and horizontal situation indicator (heading, distance, course deviation and glideslope) for proper and reasonable onboard indications.

Carrier aircraft pushover was initiated from an altitude of 17 500 feet and a point 18 nautical miles north of lakebed runway 17. This initial set-up (below and to the right of the outer 11° glideslope) allowed a steady 9° descent, causing a right-to-left and below-to-above traverse of the outer glideslope. The fly-through was accomplished in major mode 204 and the horizontal situation indicator mode switch was set to APPROACH throughout.

Following the anomalous microwave landing system redundancy management deselections on the first flight, it was agreed that for this flight, all three MLS's would be deselected at crew ingress and remain so until shortly before the planned autoland fly-through. This procedure was followed and the MLS's were manually selected at approximately 50 minutes after takeoff. Both horizontal situation indicator's first indicated that the MLS's had locked on at a distance of 17 nautical miles (the distance measuring equipment reads out straight-line distance in nautical miles from the vehicle position to waypoint 2, fig. 4-2, measured in the runway x-y plane, not slant range). Approximately 10 to 20 seconds following the horizontal situation indicator lock-on indications, a systems management alert light/tone occurred and the following fault message was displayed: G201 MLS RM 1234 001/15:43:54.

Microwave landing system data on SPEC 201 (RM-NAV) was immediately reviewed by both crewmen (RM-NAV was already up on CRT-1 as a SPEC and on CRT-2 as a DISPLAY). A "↓" was observed next to MLS 3 ΔAZ and MLS 3 was noted to have been automatically deselected by redundancy management. The delta azimuth data, however, showed no difference between MLS 1, 2 or 3. The crew elected to leave the MLS configuration as it was because of the busy workload of monitoring the fly-through, so the entire fly-through was conducted with MLS 1 and 2 selected and 3 automatically deselected. A postflight review of the radar tracking data showed that at the moment of MLS deselection, the vehicle was approximately 2.5° right of the lakebed runway 17 centerline and 2000 feet below the 11° outer glideslope.

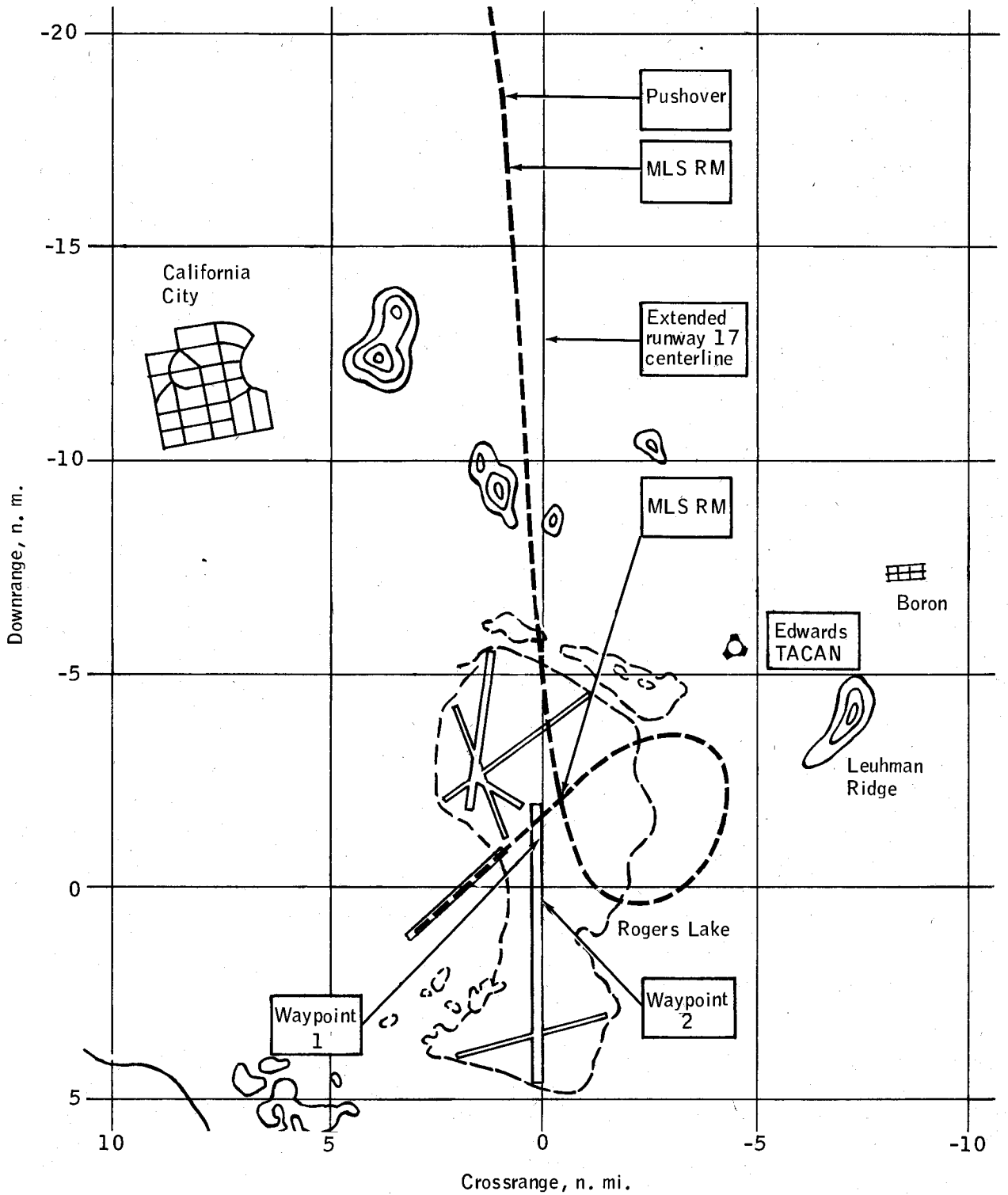

Figure 4-2.- Autoland fly-through.

At lock-on, the course deviation indicator was pegged left, the glideslope indicator pegged up. The course deviation indicator drifted left to right, indicating centerline crossing at 6 nautical miles (derived from the navigation state) and continued to the right. The glideslope indicator drifted down, indicating crossing the 11° outer glideslope at 6 nautical miles (derived from the navigation state) and continued down. (Radar tracking data showed centerline crossing at 6.5 nautical miles and glideslope crossing at 5.3 nautical miles.) Cross-correlation between course deviation indicator and glideslope indicator indications, both with the out-the-window view of lakebed runway 17 and the postflight review of radar tracking data, showed that they were operating as expected.

The roll and pitch error needles were also monitored but were difficult to judge precisely since their centered position was not directly correlatable to the out-the-window view. Qualitatively, however, both guidance needles behaved in a smooth and reasonable manner. The roll error needle was pegged left (requesting more of a "cut" to intercept centerline) down to 11 nautical miles, then drifted right (crossing center at 8 n. mi.) and continued right (asking for a right bank to intercept centerline). The pitch error needle was deflected up (asking for an intital nose-up to intercept the 11° outer glideslope) and slowly drifted down as the 11° outer glideslope was crossed.

During the autoland fly-through, several "glitches" occurred on the left horizontal situation indicator. Attention was not on the horizontal situation indicator at the time, and the impression was that it was the compass card that was moving. However, when viewing the onboard instrument panel film, it appeared that the bearing needles were flicking. The incident occurred within a few seconds of the MLS RM and the horizontal situation indicator source switches were set at APPROACH/MLS/1.

The fly-through was terminated below 3000 feet.

After completing the autoland fly-through, a 270° left turn was made by the carrier aircraft to line up for landing on runway 22. As the lakebed runway 17 centerline was approached, another MLS RM message was received. At this time, the left attitude director indicator was observed still indicating a 30° left bank with the "off" flag in view. The DATA BUS SELECT switch was rotated from data bus 1 to data bus 2 and 3 with no change in the attitude director indicator indications. The right attitude director indicator was operating properly. The left attitude director indicator indications remained unchanged through powerdown (ref. par. 6.3).

Landing configuration changes (gear, flaps) by the carrier aircraft were not noticed in the Orbiter. As speed was reduced on the final approach, the characteristic noise of the auxiliary power unit was heard. Touchdown felt extremely smooth and derotation and deceleration were uneventful.

4.2.8 Postflight

After clearing the runway, APU/HYD DEAC was accomplished with nominal onboard indications, but the convoy commander reported a fluid leak dripping onto the carrier aircraft (sec. 6.4). GPC DEACT was without incident.

The egress radio was activated and worked satisfactorily until egress was completed. COMPLETE ORBITER POWERDOWN and SEAT GROUND EGRESS were nominal. Monitoring the ground egress crew on the egress radio was helpful in determining the progress of hatch opening.

Three changes were made in Orbiter egress procedure: (1) the protective breathing system requirement was deleted, (2) a tether was attached from the snorkel basket to the egressing crewman, and (3) the crew descended to the ground prior to hatch closure. All seemed to enhance the ease and apparent safety of the egress procedure.

4.2.9 Fault Message Summary

The following is a complete list of all fault messages displayed to the crew during the flight (from crew ingress to computer deactivation).

Fault message			Remarks
G311 BDYFLP VLV RM	1234	001/14:22:18	Normal response during preflight flight control system checks
G311 BDYFLP VLV RM	1234	001/14:27:50	
G111 FCS SATURATION	1234	001/14:38:38	
G111 FCS SATURATION	1234	001/14:38:52	
G111 FCS SATURATION	1234	001/14:41:39	
HSI TRANS SW INVAL R	1234	001/15:25:46	Refer to paragraph 4.2.5
G201 MLS RM	1234	001/15:43:54	Refer to paragraph 4.2.7
G201 MLS RM	1234	001/15:50:49	
G111 FCS SATURATION	1234	001/15:59:32	Normal response to elevon "droop" following auxiliary power unit shutdown

4.2.10 General Comments

4.2.10.1 TACAN

The three TACAN's were tuned to Edwards (channel 111) and selected via SPEC 201 immediately after takeoff. No TACAN loss of lock was observed during the entire flight, including rollout after landing. During turns where either Orbiter or carrier aircraft blockage was anticipated, range and azimuth data were monitored on SPEC 201. The degraded azimuth indication observed on captive-active flight 1A was never noticed.

4.2.10.2 Visibility

The visibility through all windows was excellent with no reflection, fogging or residue problems. The visibility envelope was more than adequate for straight-in approaches. However, during the turn onto the autoland fly-through and the turn onto the final approach for landing, acquisition of familiar landmarks and orientation with respect to the runway was less than ideal, particularly after attention had been diverted to inside the cockpit. There was a definite desire to momentarily roll out of the bank and scan the area for reorientation.

4.2.10.3 Cabin Cameras

Cabin camera 1 viewed the left main display panel and recorded panel indications at 1 frame per second, except when selected to run at 12 frames per second. Resolution of the horizontal situation indicator, attitude director indicator, nose boom airspeed and altimeter, and the eight-day clock were adequate for determining attitude, needle positions and reading some larger letters and numbers.

Particularly in the free flight phase, useful additions to readable instruments would be the alpha-Mach indicator, altitude and vertical-velocity indicator, nose boom angle-of-attack and sideslip indicators, and accelerometer.

4.3 THIRD FLIGHT

4.3.1 Crew Ingress To Clearance of Mate/Demate Device

Crew ingress took 25 minutes for both crewmen. The only vehicle configuration anomaly was a built-in test equipment (BITE) display in the status columns for inertial measurement units 1 and 3 on SPEC 201 (RM-NAV).

The BENCHMARK 1 UPDATE was accomplished earlier than planned at 13:36. Just before backout from the mate/demate device, it was apparent that the volume level of the carrier aircraft transmissions was sufficient to totally mask all other transmissions including intercommunication conversations between the Orbiter pilots. It was impossible to reduce the volume by adjusting any of the intercommunication panel controls, and as a result, carrier aircraft transmissions totally interrupted conversation between the Orbiter crewmembers. During the PREFLIGHT COMM CHECK when the carrier aircraft/Orbiter hardline was disabled by pulling the audio panel mid-deck circuit breaker, it was noticed that the loud carrier aircraft transmissions were reduced in volume to a point that the carrier aircraft crew was barely readable. Thus, the source of excessive volume was isolated to the hardline, but it was re-enabled because the carrier aircraft/Orbiter RF link was unacceptable. (See par. 3.5.3.)

4.3.2 Backout From Mate/Demate Device To Takeoff

With the AIR DATA SELECT SWITCH in the CMPTR position, the alpha/Mach indicator and altitude/vertical velocity indicator readings were Mach = 0.0, velocity (knots equivalent air speed) = 4.0, altitude rate = minus 1.0, and altitude = 148 nautical miles at 13:56:05. This was only 21 minutes after the prior benchmark and the 148-nautical-mile altitude was questionable. At 14:19:30, the readings were Mach = 0.04, velocity (knots equivalent air speed) = 62, altitude rate = minus 64, and altitude = lower limit with "off" flag. Both the Commander's and the Pilot's instruments displayed identical values.

During taxi, approximately 50 minutes prior to takeoff, it became apparent to the Pilot that the hot mike signal from the Comamnder and the Pilot's own sidetone were cutting in and out and then gradually failed completely. All the communication cord connections were checked and the audio panel controls were readjusted, but to no avail. After approximately 8 minutes, the problem mystereously disappeared. At the time that it did, no connection or control was being adjusted. The intercommunications were normal throughout the rest of the flight. (See par. 3.5.3.)

While taxiing from the mate/demate device to the south area of Dryden Flight Research Center and up "contractor row," several momentary deviations were noticed simultaneously on both the Commander's and Pilot's horizontal situation indicators. The compass card heading varied a large amount, approximately 30°, for about 1 second and then returned to its normal reading simultaneously on both instruments. This happened two or three times during the next few minutes and was always to the left or toward a smaller heading. At least once, the primary and secondary bearing pointers also exhibited the same sort of

rapid "glitch" simultaneously on both cockpit instruments. The indications appeared to be accurate except for these momentary deviations. The condition was not noticed at any time later during the flight. (See par. 3.5.7.)

In turning the corner at the Dryden Flight Research Center, several large TACAN delta azimuth readings were noted with the tail of the vehicle oriented toward the Edwards station. This was the same as observed on the first captive-active flight except that there were no TACAN RM alarms because the TACAN's were deselected.

An extra Benchmark 4 was inserted at 14:32:30.

String-4 surface position feedbacks were essentially identical to the other three except for the speed brake which differed 0.2° to 0.3°.

An AIR DATA RM message occurred at 14:43:15 which was caused by a no. 2 total temperature miscompare "↓" on SPEC 301 (RM SENSORS). The difference between probe temperatures was only 3° at the time the data were checked, which was within the tracking test limit of 10°. At this time the carrier aircraft was taxiing onto the runway and possibly provided enough air flow to cool the hotter side probe. The configuration was not altered prior to takeoff.

Just before takeoff the FAULT SUMMARY PAGE was recorded before clearing with DISP 051. The listing included the following messages.

Fault Message			Remarks
AIR DATA RM	1234	14:43:15	ADTA-2 total temperature.
FCS SAT	1234	14:39:12	Normal FCS check.
FCS SAT	1234	14:38:59	
B/F RM	1234	14:30:08	Normal per procedure.
B/F RM	1234	14:23:09	Normal per procedure.

4.3.3 Takeoff Through Landing

The noise of the carrier aircraft advancing power could be heard prior to brake release. At brake release, the cabin camera 1-FPS switch was turned on as planned. On previous flights, it has been possible to verify that camera 1 was operating by placing a finger behind the green operate light on the camera itself and observing a reflected flash with each cycle. The normal cockpit noise and vibration environment makes it impossible to hear or feel camera cycling. On this flight, it was impossible to see any light reflection and, therefore, impossible to verify that the camera was operating. To be certain that the logic sequence of the control switches was not the cause of the problem, both the 1-FPS and 12/24-FPS switches were cycled. The 1-FPS switch was turned back on, but it was still impossible to verify proper operation by means of the green light reflection. The camera switches were operated as planned for the remainder of the mission.

During the takeoff roll at 14:47:00, a series of momentary MLS delta RNG (microwave landing system delta range) readings were observed. The carrier aircraft rotated to a pitch angle of 16° at 137 knots. Just after becoming airborne, there were several lateral "lurches" which felt like carrier aircraft damper inputs. Approaching 170 knots, the characteristic low-frequency wavering airstream noise observed on the first flight was noted. Its intensity was proportional to airspeed.

The cabin vent function was noticeable from the pressure change induced, but the sound was insignificant compared to the ram air valve used on the first flight.

TACAN 1 was auto deselected at 15:02:39 because of a delta azimuth miscompare. When SPEC 201 (RM-NAV) was checked, the data indicating bad was actually a jumping delta azimuth on TACAN 3, although TACAN 1 with good data had already been deselected. The jumps of TACAN 3 apparently were not steady enough to allow RM to issue the dilemma message. Further details are presented in paragraph 4.3.5.

China Lake TACAN (CH 053) was selected at 15:05:20, and the lockup times were 5 seconds for delta azimuth 1 and delta range 2 and 3 with 8 seconds for all to fully lock up. Edwards (CH 111) was reselected at 15:11:20, but TACAN 3 failed to lock up. The TACAN 3 frequency selector was double-checked on 111X.

Approximately 16 minutes after takeoff, auxiliary power unit 1 was started as planned, and all indications were normal. Four minutes later, a master alarm and APU TEMP C&W indication occurred. The auxiliary power unit temperature indicator was switched to position 1 and it was indicating off-scale high. Auxiliary power unit 1 was immediately shut down according to established procedure. Mission control subsequently advised that their indication of exhaust gas temperature on ground instrumentation from a different sensor was showing normal temperature. Because of the hot restart constraint, auxiliary power unit 1 was left shut down for the remainder of the flight. (See par. 3.3.1.)

The TACAN LONG RANGE TEST was commenced in parallel with the Pilot's portion of FCS INFLIGHT CHECKOUT. After San Luis Obispo (CH 071), Lemoore (CH 080) was selected at 15:19:00. At 15:20:50 all TACAN's were switched to Mission Bay (CH 125) and only a sporadic delta azimuth reading on TACAN 1 was observed for the 1-minute data time. Palmdale (CH 092) was selected at 15:22:30.

At pushover minus 7 minutes, the Orbiter Mach indications were compared to the value of 0.52 voiced by the carrier aircraft crew. They were: Commander (left) - 0.52, Pilot (right) - 0.56, and backup - 0.536.

Edwards TACAN was selected at 15:28:30 and MLS SELECT was initiated at 15:30:00.

No state vector update was required, and a zero update was executed at 15:31:20.

The pre-pushover procedures were somewhat rushed because of the unplanned TACAN RM alarms and reconfigurations. All steps were completed but there was not time to double-check the configuration. The carrier aircraft communications changed

quality at the pushover minus 1 call, as though the crew were pressure breathing. The backup attitude indicated a pitch angle (θ) of 9° compared to 12° given by the primary attitude director indicator just prior to pushover.

From the Commander's side window, lakebed runway 17 could be seen by leaning far to the left. At pushover, in a normal body position, only Edwards base housing and the approach end of runway 4 were visible. The mine at Boron could not be seen over the nose.

Pushover was a very mild maneuver. A maximum of 1 deg/sec pitch rate was observed as pitch angle was reduced from 12° at pushover to 0° at launch ready. The power reduction and spoiler deployment were barely noticed, though the pitch adjustment to maintain launch airspeed seemed very similar to the Orbiter aeroflight simulator model. There also was a significant increase in airstream noise level as speed increased to the launch ready point at 272 knots and 23 100 feet altitude (AGL).

On the simulated free flight-1 track for the first free flight, runway 17 could be seen halfway through the turn onto the base leg by hunching down. The waste material west of the Boron mine could barely be seen during the turn to the base leg. The major mode change to 204 was accomplished at 15:38:59 after the AUTOLAND event light went steady.

ADTA STOW AND DEPLOY was initiated by stowing the right probe at 15:39:44. Two seconds later, an ADTA RM message was generated and was correlated on SPEC 301 (RM SENSORS) as a probe dilemma case. The left probe was subsequently stowed followed by simultaneous deployment of both and verified by DEPLOY gray flags.

A high-pitched tone was heard briefly during the simulated final approach. Its source couldn't be determined.

After MLS RM RESET, the initial lockup of delta range was observed passing abeam of the low-altitude airspeed calibration line (running north-south along the lakebed east shore) when the carrier aircraft was on final approach for runway 22.

Touchdown occurred at 15:47:00 at a velocity of 146 knots. The Orbiter gear were deployed at 124 knots and took approximately 11 seconds to indicate down. There was a pair of audible "thunks" when the down push-button-indicator was pushed, but the overall physiological effect of gear deployment was less than that usually experienced on large aircraft at similar speeds.

4.3.4 Postflight

There was some confusion onboard about what was desired by mission control for the APU/HYD LOAD TEST AND DEACT. A checklist change transmitted prior to landing did not correspond to the actual auxiliary power unit postlanding configuration. Considerable conversation was required to clarify the desired procedure.

It was noted that with masks removed, the cockpit ambient noise feeding into the hot mike intercommunications almost masks master alarm tones.

The final reading of the FAULT SUMMARY PAGE which represents all the inflight messages were as follows.

Fault Message			Remarks
FCS SAT	1234	15:53:49	Result of postflight load test.
FCS SAT	1234	15:53:21	
FCS SAT	1234	15:51:09	
AIR DATA RM	1234	15:39:46	Probe dilemma caused by planned stowing of air data probes.
TACAN RM	1234	15:26:19	TACAN 3 deselected - delta AZ varying from 5° to 320°.
TACAN RM	1234	15:14:10	TACAN 3 delta AZ deselect - initially not locked up.
B/F VLV RM	1234	15:10:37	Normal with reset of body flap after auxiliary power unit 1 shutdown.
TACAN RM	1234	15:02:39	TACAN 1 delta AZ deselect passing Edwards cone of confusion with carrier aircraft in 15° left bank.

At 15:56:30, a BFCS C&W light came on due to an uneven droop of the left elevon panels following auxiliary power unit/hydraulic system shutdown and depressurization.

4.3.5 General

4.3.5.1 TACAN

Three aspects of TACAN behavior on captive-active flight 3 are discussed: normal behavior, a questionable TACAN 3 channel select, and a questionable TACAN 3/Orbiter 101 wiring to antennae function.

The normal characteristics were (1) delta azimuth jumps while on the ground with the tail of the vehicle turned toward the Edwards station and (2) the first TACAN RM alarm with auto deselection of TACAN 1 due to a delta azimuth outside the tracking limits. This latter event took place passing through the Edwards station cone of confusion at 15:02:39 with the carrier aircraft in a climbing, left, 15° bank angle turn. For another 40 seconds, random jumps of the other TACAN's were also noted on SPEC 201 but, apparently, not for sufficient time to again latch redundancy management (which would have been a dilemma). Likewise, after the simulated separation maneuver, several delta azimuth jumps on SPEC 201 and horizontal situation indicator flag "glitches" were noted as the carrier aircraft flew the free flight 1 profile through the Edwards station cone of confusion. This surely would have triggered redundancy management alarms except that the configuration was prime select on TACAN 2 at this time.

On the southbound leg at 15:11:20, the TACAN's were switched from China Lake (CH 053) to Edwards (CH 111). TACAN 3 was observed not to lock up on both SPEC 201 and the horizontal situtation indicator. The settings of TACAN 3 to 111X were reverified to be correct. At 15:14:10, a TACAN RM message occurred with an auto deselect of TACAN 3 due to delta azimuth outside tracking limits.

Just after the carrier aircraft started the turn from south back to north, another TACAN RM message at 15:26:19 was due to a delta azimuth exceeding the tracking test limits on TACAN 3 with an auto deselect. The TACAN 3 azimuth data on SPEC 201 was oscillating from 005° to 320°. This phenomenon continued and was observed several times after completing the 180° turn to the northbound heading. One specific time noted was 15:29:45 just after switching to Edwards (CH 111). The TACAN messages are discussed further in paragraph 3.5.3.

4.3.5.2 Altitude Rate Meter

Specific attention was directed toward the indications on the alpha/Mach indicator and altitude/vertical velocity indicator instruments, particularly during the climb-out and descent portions of the flight. With one exception, all indications on both instruments with the AIR DATA SELECT SWITCH in any position - LEFT, RIGHT or CMPTR - were smooth, steady, and easily readable. The one exception was the altitude rate tape on both instruments which, in a climb or descent condition, displayed a very noisy indication. The tape jumped about at random, sometimes ± 5 ft/sec, sometimes 20 ft/sec and, in the worst case noticed during climb, ± 30 ft/sec. This condition was noticed only with the AIR DATA SELECT SWITCH in either LEFT or RIGHT. When the CMPTR position was selected, the indications were steady and readable. The variations were random rather than a constant oscillation about a center value and were totally useless as far as determining actual altitude rate. Very light turbulence was encountered during the climb and it seemed to worsen the jumpiness of the altitude rate indication. The altitude rate meters are discussed further in paragraph 3.5.7.

4.3.5.3 Ambient Lighting

The weather conditions during the flight were completely clear skies and bright sunlight. The Commander utilized his dark helmet visor during the first part of the flight in order to reduce the outside glare. However, it was very difficult to read the instruments and cathode ray tube displays inside the cockpit after the eyes had accommodated to the outside brightness through the dark visor. For the last part of the flight, the dark visor was raised and a mildly uncomfortable glare was accepted to better facilitate viewing the inside instruments and displays.

4.3.5.4 Disabled Intercommunications Evaluation

During climb-out, the feasibility of communications between crew members without the aid of the intercommunications system was evaluated. The hot mike intercommunications were disabled, the masks of both crewmembers were removed, and communications were attempted by shouting. It was found that the ambient noise level was such that, with the helmets still on and the intercommunications disabled, the crewmembers could just barely hear each other. It was necessary

to shout very loudly to make oneself heard. It was felt that should either intercommunication box fail during free-flight, communications in this manner would be feasible. Also, both crewmembers briefly removed their helmets and found that, without the restriction caused by the tight-fitting helmets over the ears, conversation was comparatively easy between pilot seats.

4.3.6 Recommendations

1. Reduce carrier aircraft hardline intercommunications volume to within the adjustable range of the other input signals.

2. Assure that TACAN RM does not trigger "nuisance" alarms on free flight 1 when passing near the Edwards station during free flight.

3. Smooth left/right air data probe altitude rate altitude/vertical velocity indicator displayed data for Orbiter 102 and subsequent vehicles.

ACRONYMS, ABBREVIATIONS AND TERMINOLOGY USED IN ALT PILOT'S REPORTS

ACT	Activation
ADC	Air data computer
ADTA	Air data transducer assembly
APU	Auxiliary power unit
AUTO	Automatic
AZ	Azimuth
BARO	Barometer
BITE	Built-in test equipment
BDY	Body
B/F	Body flap
CMPTR	Computer
COMM	Communications
CPU	Central processing unit
CRSFD	Crossfeed
CRT	Cathode ray tube
CSS	Control stick steering
C&W	Caution and warning
DEACT	Deactivation
DISP	Display
DPS	Data processing subsystem
FCS	Flight control system
FLP	Flap
FPS	Feet per second
GPC	General purpose computer
GSE	Ground support equipment
HPG	High pressure gas
HPGS	High pressure gas storage subsystem
HSI	Horizontal situation indicator
HYD	Hydraulic
INVAL	Invalid
ISOL	Isolation
KEAS	Knots equivalent air speed
MANF	Manifold
MLS	Microwave landing system
MM	Major mode
Mn	Main
NAV	Navigation
OPS	Operational sequence
PLT	Pilot
POLL	Polling
PRO	Proceed
RCVR	Receiver
R	Right
RM	Redundancy management
RNG	Range
SAT	Saturation
SCA	Shuttle carrier aircraft
SPEC	Specialist (function)
SW	Switch

TAC	Tactical air navigation
TACAN	Tactical air navigation
TAEM	Terminal area energy management
TEMP	Temperature
TRANS	Transition
T_t	Total temperature
UHF	Ultra high frequency
VLV	Valve
Δ	Delta (differential)
$\downarrow$	Out of limit low

SOFTWARE TERMINOLOGY

OPS 1 - Preflight operational sequence

MM 101 - Preflight preparation

OPS 2 - Flight operational sequence

MM 201 - Mated flight

MM 202 - Separation

MM 203 - TAEM

MM 204 - Autoland

MM 205 - Rollout

Guidance, navigation and control functions are divided into principal and specialist functions. Principal functions are those that can be initiated only by software. Specialist functions are those that can be initiated only by the crew, and include the following used in this report.

SPEC 201 RM-NAV

SPEC 221 NAV/TARGET UPDATE

SPEC 301 RM SENSORS

SPEC 321 RM SWITCHES

5.0 GROUND OPERATIONS

Orbiter systems servicing was completed to support the first captive-active flight on June 17, 1977; however, the flight was postponed until the following day because of a preflight failure of general purpose computer 3. (see par. 6.6).

During turnaround following the first flight, inertial measurement unit 1 was replaced because of a power supply failure. (See par. 6.5).

After the second flight, leakage from the auxiliary power unit 1 overboard drain during flight (which migrated into the aft fuselage) required extensive cleanup, along with repair of wire damage. The auxiliary power unit controllers and auxiliary power units 1 and 3 were changed with units having new fuel pump seals. The new units were tested during ground runs, along with modification to the backup hydraulic reservoir interface with hydraulic systems 1 and 3.

Hydraulic fluid was spilled in the aft right electronics bay during ground operations on July 14, 1977. Three unsealed components, the auxiliary power unit 3 controller, a load control assembly, and a power control assembly, were exposed to the fluid. Short term materials compatibility testing indicated that all materials in these three units were unaffected by hydraulic fluid except for the conformal coatings of Silicone DC3140 and RTV 560, both of which are used to protect against moisture. The tests showed a 14-percent swelling of the silicone in the same family with a slight decrease in hardness, but with no other degradation. No problems were exhibited by the affected equipment during subsequent operations.

In addition to the standard postflight safing operations conducted after the third flight, the ground operations included verification that the nose landing gear thruster and uplock release pyrotechnics were expended, as the landing gear was deployed inflight without hydraulic system 1 active.

6.0 ANOMALY SUMMARY

Problems reported in this section that were not closed as of the time of publication will be reported individually in supplemental reports at the time of closure.

6.1 HYDRAULIC SYSTEM 1 WATER BOILER STEAM VENT LINE TEMPERATURE READING WAS LOW

The hydraulic system 1 water boiler steam vent temperature reading was lower than expected during captive-active flight 1A.

The steam vent heater circuit includes an 89-watt and a 33-watt heater group connected in parallel (fig. 6-1). Each group is controlled by two thermostats in series and set for temperatures to prevent freezing in the 2-inch duct.

Postflight testing confirmed that the 33-watt heater group was inoperable. The 89-watt heater group was operating normally and was determined to be adequate for the remainder of the Approach and Landing Test Program.

Heater checkout procedures used prior to the first captive-active flight were such that only an increase in vent temperature was required for the heater to pass checkout. Since this increase in temperature would have resulted from either heater group functioning, a failed heater could have gone undetected.

The test checkout procedure will be changed to require measurement of current provided by each redundant heater group for the Orbital Flight Test vehicle.

This anomaly is closed for the Approach and Landing Test Program.

6.2 ALERT MESSAGE "HSI TRANS SW R" WAS DISPLAYED TO THE CREW

During captive-active flight 1, the horizontal situation indicator was being driven by TACAN information and the Pilot repositioned the transfer switch from "1" to "2" to see if there was any difference between TACAN systems data as observed on the indicator. The cathode ray tube then displayed the alert message.

The computer reads the position only once per second and indicates a fault if anything other than a single switch position is read. The condition only has to be observed once for the alert to be indicated on the cathode ray tube. However, if only one switch position is indicated on the next read cycle, the horizontal situation indicator will continue to indicate valid data. The alert message will remain on the cathode ray tube. The conditions observed in flight were repeated in ground test.

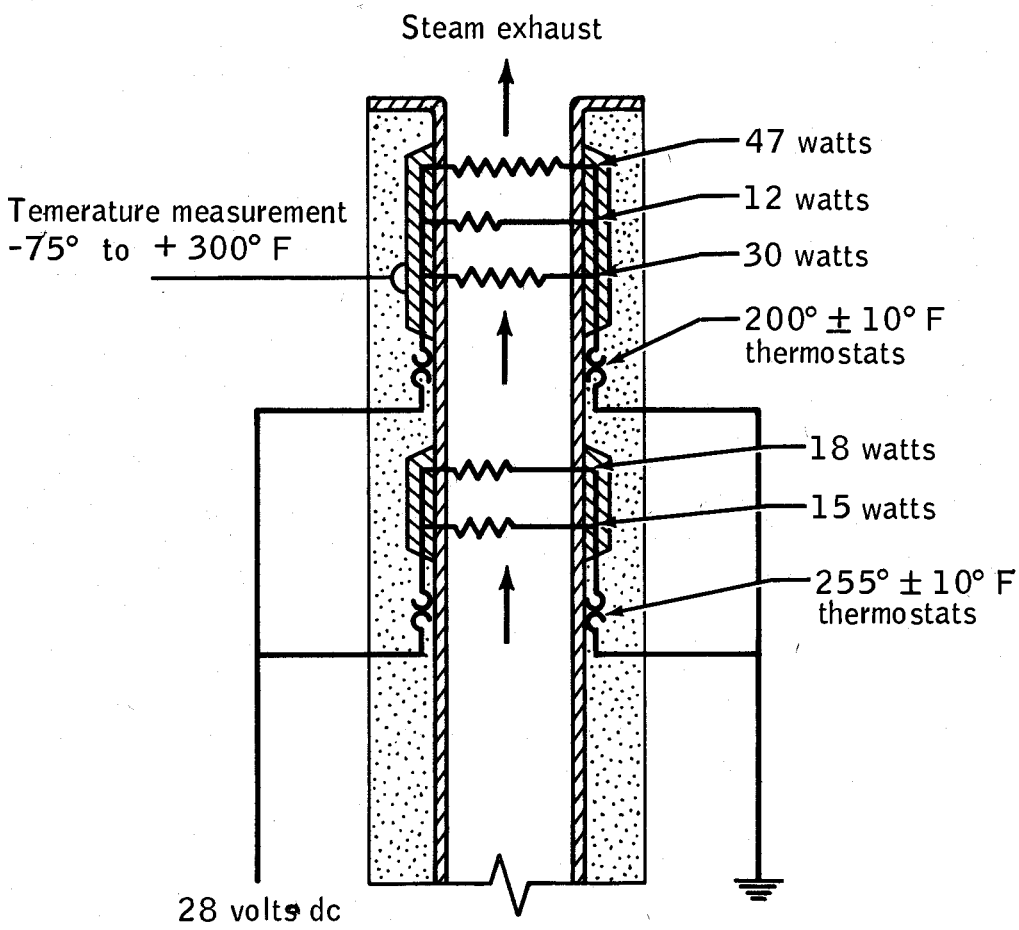

Figure 6-1.- Water boiler steam vent heater circuits.

There are fourteen switches on the display and control panels that may cause the computer to read zero or more than one switch position in any one sample period and thereby generate momentary nuisance alerts. These are:

1	CDR ADI ERROR	HIGH-MEDIUM-LOW	Switch 3, Panel F6
2	CDR ADI RATE	HIGH-MEDIUM-LOW	Switch 4, Panel F6
3	PLT ADI ERROR	HIGH-MEDIUM-LOW	Switch 4, Panel F8
4	PLT ADI RATE	HIGH-MEDIUM-LOW	Switch 5, Panel F8
5	CDR AIR DATA SELECT	LEFT-CMPTR- RIGHT	Switch 5, Panel F6
6	PLT AIR DATA SELECT	LEFT-CMPTR-RIGHT	Switch 6, Panel F8
7	CDR RADAR ALTM	1-2	Switch 7, Panel F6
8	PLT RADAR ALTM	1-2	Switch 7, Panel F8
9	CDR HSI SELECT	ENTRY-TAEM-APPROACH	Switch 3, Panel F6
10	CDR HSI SELECT	TACAN-CMPTR-MLS	Switch 5, Panel F6
11	CDR HSI SELECT	1-2-3	Switch 4, Panel F6
12	PLT HSI SELECT	ENTRY-TAEM-APPROACH	Switch 3, Panel F8
13	PLT HSI SELECT	TACAN-CMPTR-MLS	Switch 5, Panel F8
14	PLT HSI SELECT	1-2-3	Switch 4, Panel F8

The underlined choice is picked by the computer when zero, two, or three switch positions are indicated. During the next sample time, 0.96 second later, when one switch position is indicated, the computer switches to the crewman's choice.

The system performed as designed. There will be no corrective action for Approach and Landing Test flights. The crew's have been informed of potential nuisance alert messages which may be encountered on subsequent Approach and Landing Test flights.

This anomaly is closed.

6.3 COMMANDER'S ATTITUDE DIRECTOR INDICATOR ROLL DISPLAY FAILED

After approximately 15:47 on captive-active flight 1, the roll attitude display on the Commander's attitude director indicator remained static for the remainder of the flight.

The roll axis servo motor was found to have brinnelled bearings. Tests conducted on another servo motor resulted in similar brinnelling on the motor bearing races when the motor was dropped. Based on these tests and the fact that no other damage was observed in the attitude director indicator, the conclusion is that the bearings were damaged by inadvertent impact prior to installation in the attitude director indicator.

The Commander's attitude director indicator (serial no. 1) was replaced by a spare (serial no. 5).

This anomaly is closed.

6.4 AUXILIARY POWER UNIT 1 FUEL PUMP BELLOWS SEAL FAILED

During captive-active flight 1, the auxiliary power unit 1 bellows seal failed (fig. 6-2). The excessive hydrazine leakage filled the 500 cc accumulator bottle and flowed through the overboard drain (fig. 6-3). The flow path of the hydrazine was along the outside surface of the Orbiter, into the aft fuselage compartment, through the clearance around the access door, and through the aft fuselage vent (fig. 6-4). The flow path was evidenced by blistered paint (fig. 6-5), puddles on the compartment floor, discoloration of cables and wire trays, and by deposits on cables and trays.

The hydrazine in the aft fuselage compartment affected 157 wires with varying degrees of wiring insulation damage.

a. The polyimide top coat was discolored, or removed during cleaning (108 cases).

b. Kapton covering was abraded (20 cases).

c. Kapton was abraded and the shield was exposed (8 cases).

d. Physical damage was caused during inspection and/or repair (47 cases).

Corrective action for the wiring insulation damage consisted of splicing new wire sections in place of damaged sections (28 cases), cleaning and wrapping affected wire with tape (74 cases), and only cleaning the wire (55 cases).

The life expectancy of the auxiliary power unit fuel pump bellows seal has not been predictable, and a sudden increase to an excessive leakage rate is experienced when bellows seal failure occurs. An alternate design using an elastomeric seal in place of the metal-fatigue-sensitive bellows design was installed on auxiliary power unit 2 for all three captive-active flights, and on auxiliary power units 1 and 3 for the third captive-active flight (fig. 6-2). Ground test experience indicates a more gradual increase in leakage rate as the result of elastomeric seal wear. In addition, seals were added to previously unsealed doors and panels in the area; and the aft fuselage vents have been protected against hydrazine flow entry by inverting the vent screen frame (fig. 6-6).

This anomaly is closed.

6.5 INERTIAL MEASUREMENT UNIT 1 WOULD NOT GO TO OPERATE

During preflight checks for the first captive-active flight on June 17, 1977, inertial measurement unit 1 would not go to "operate." The first flight was conducted the following day with the failed unit and the unit was replaced for the second flight. The replacement unit performed normally in flight.

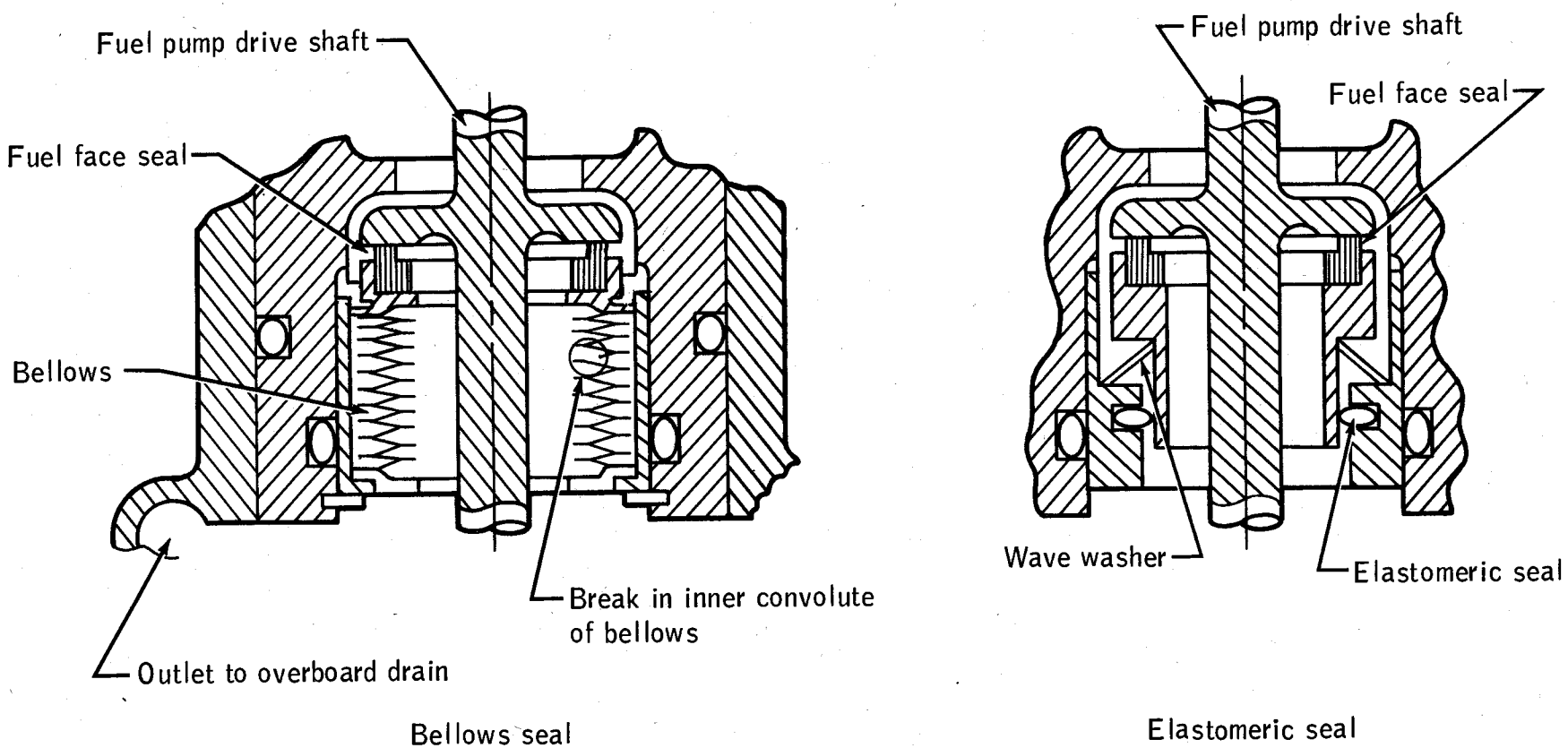

Figure 6-2.- Auxiliary power unit fuel pump seals.

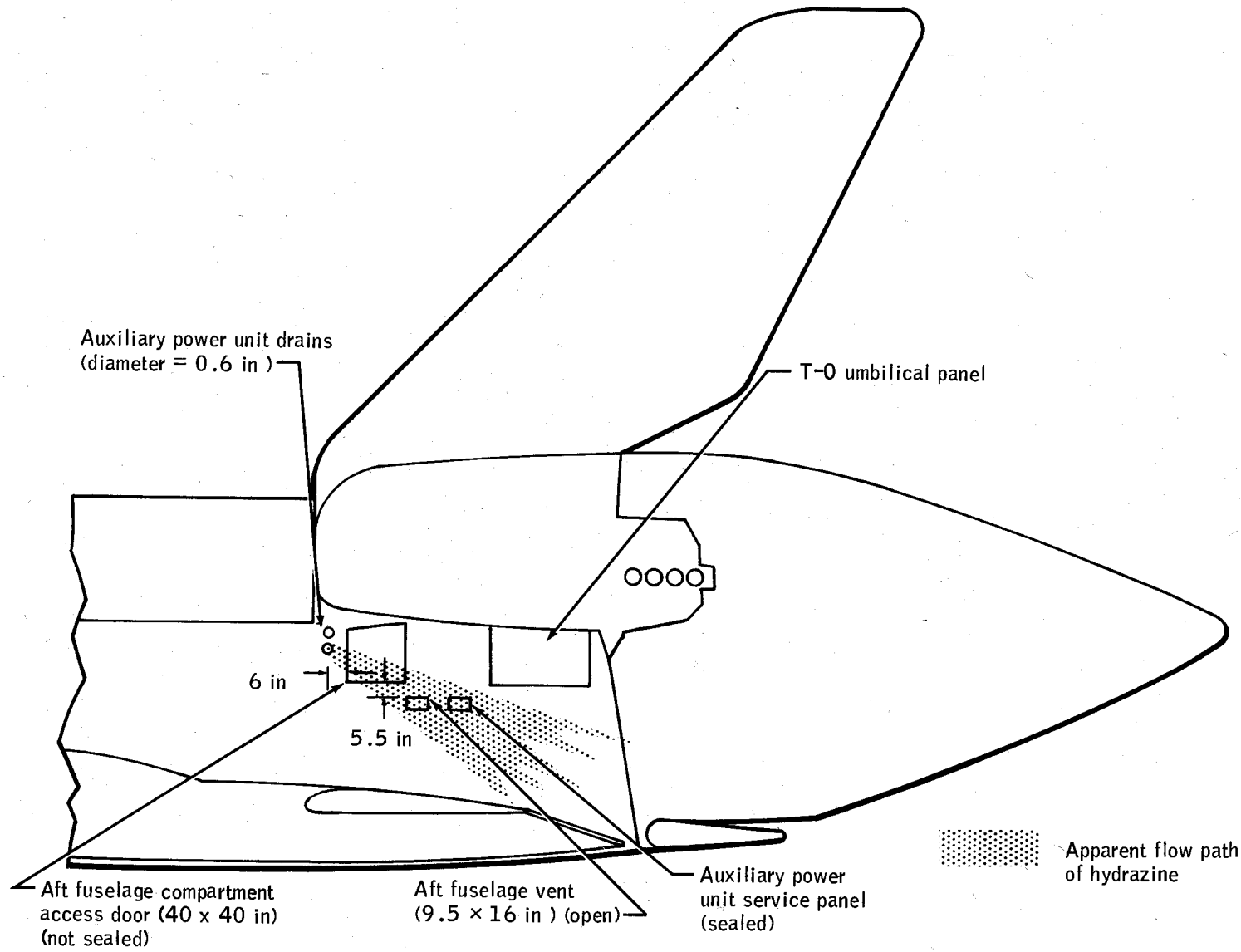

Figure 6-3.- Hydrazine flow on aft fuselage left-hand external surface.

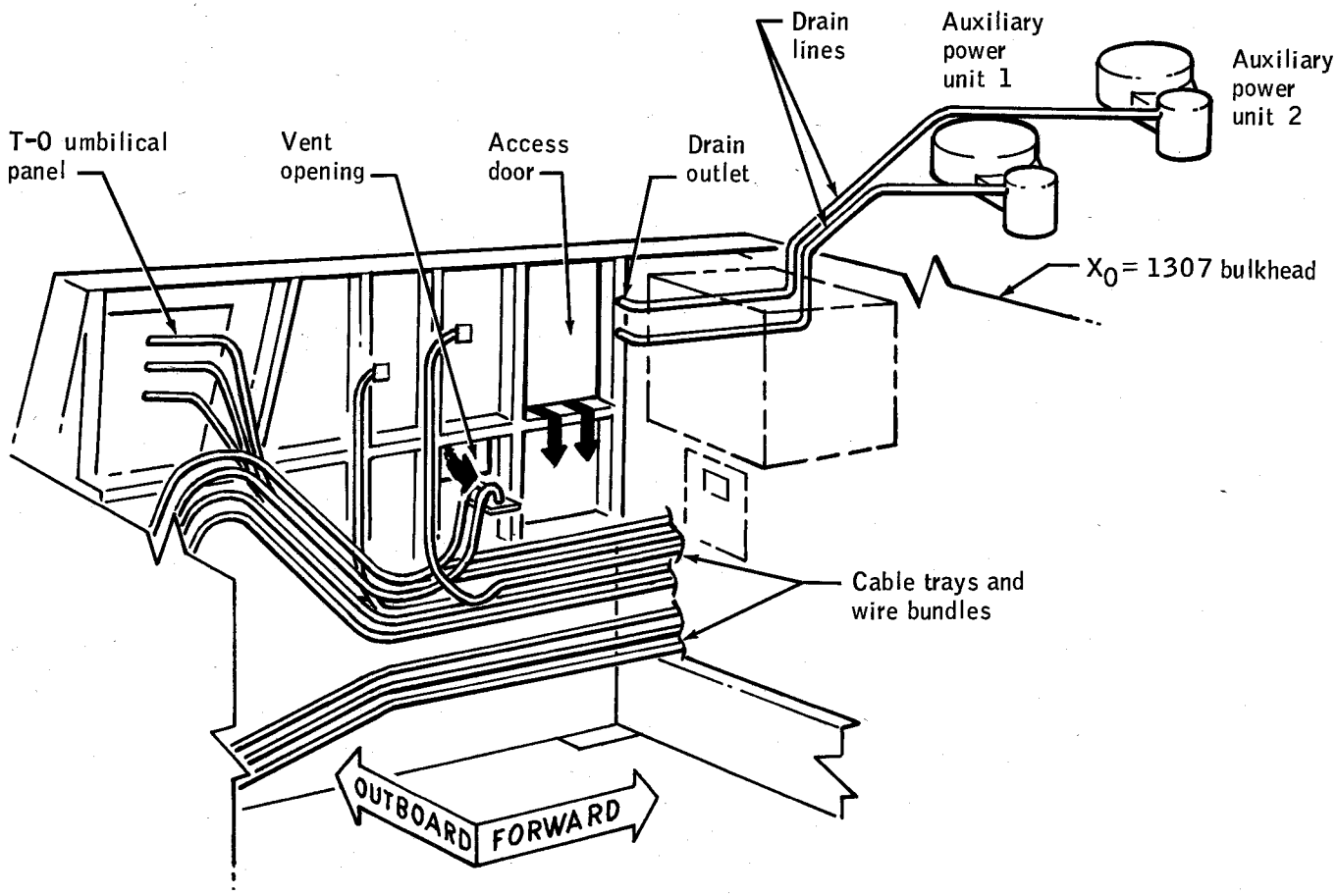

Figure 6-4.- Aft fuselage interior, left-hand side wall looking outboard.

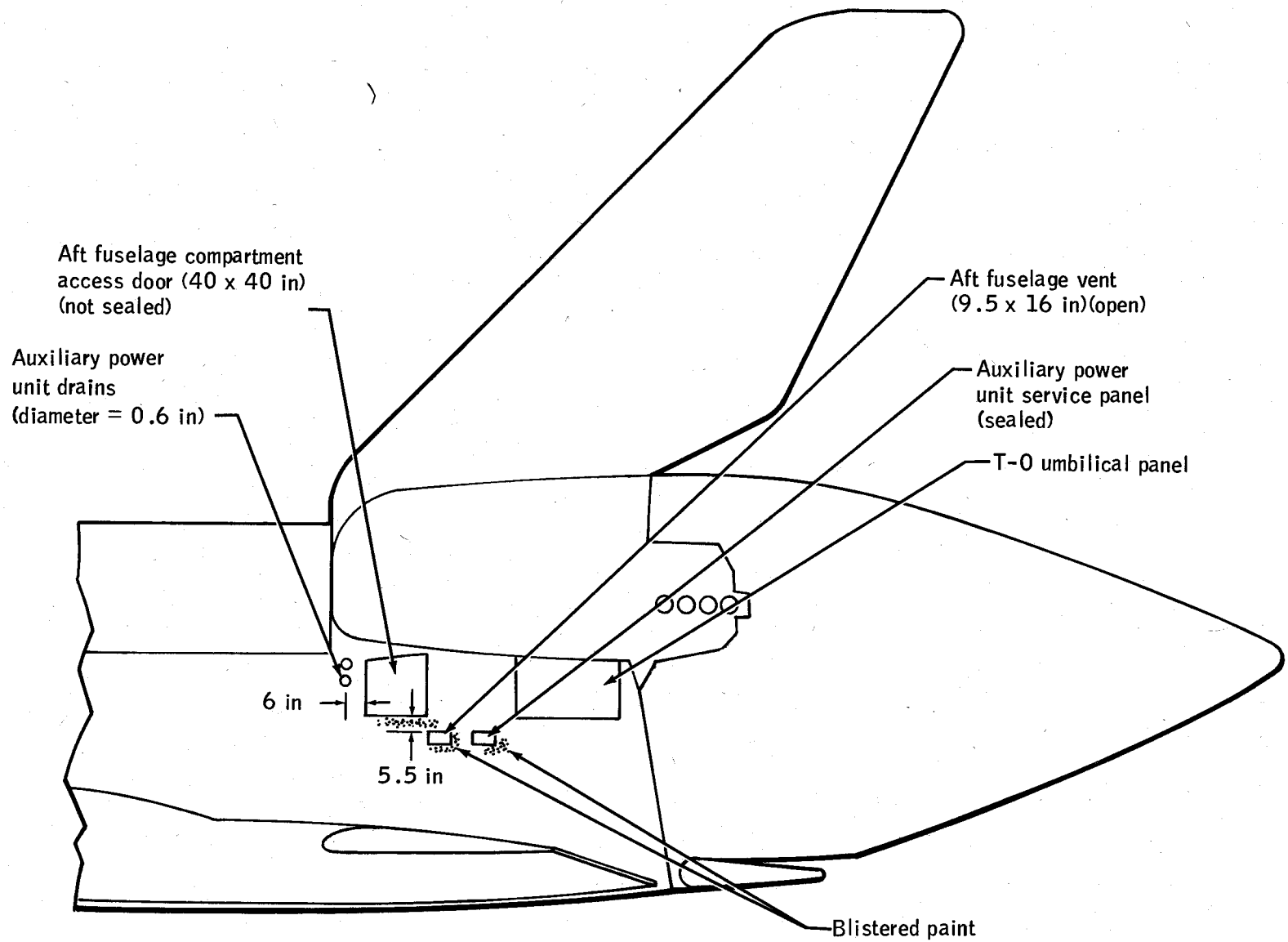

Figure 6-5.- Hydrazine on aft fuselage left-hand external surface.

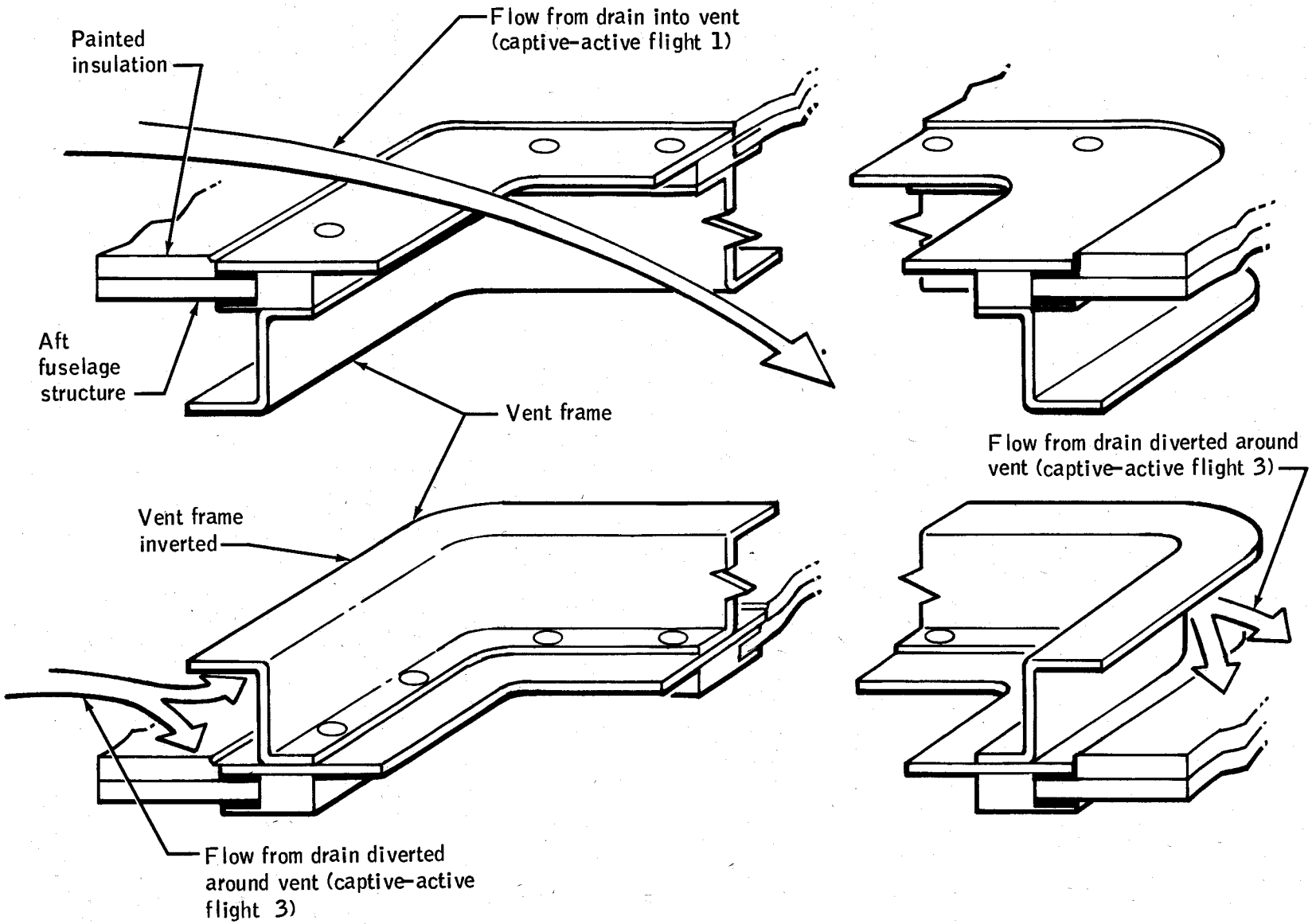

Figure 6-6. - Vent protection for captive-active flight 3.

Bench testing of the failed unit isolated the problem to a failure in the DC-1 internal power supply of the inertial measurement unit. The unit was opened and inspection revealed that the solder did not adhere properly to a power supply transistor lead due to improper metallurgical bonding. The kovar transistor lead had a gold coating that was insufficient to protect it from oxidation.

No change is required for Orbiter 101 until the inertial measurement units are retrofitted for orbital flight. For Orbiter 102 and subsequent vehicles, transistors in all inertial measurement units are being replaced with transistors that have good lead solder wetting.

This anomaly is open.

6.6 GENERAL PURPOSE COMPUTER 3 FAILED

General purpose computer 3 failed during preflight checks for captive-active flight 1A on June 17, 1977, at 14:33:04. The central processing unit and input-output processor both stopped executing. No built-in test equipment error indications were generated.

Each general purpose computer consists of two electronic packages; a central processing unit and an input-output processor (fig. 6-7). Computer memory is split between the two packages, as shown in the figure. The central processing unit contains the main memory control circuits.

The central processing unit and input-output processor operate essentially independently. Each has access to the shared memory during alternate 900-nanosecond cycles. During high input or output activity, the input-output processor can take over exclusive control of memory and the central processing unit clock logic will become static (central processing unit will stop and wait until input-output use of the memory has been completed).

Two possible causes of the failure have been identified:

First, the central processing unit clock oscillator or clock logic may have stopped or hung at a time when the central processing unit was accessing memory. If this occurred, the central processing unit would not release the memory for the next input-output processor memory cycle and the input-output processor would stop.

Second, the memory control circuits in the central processing unit may not have responded to the input-output memory advance signal (signal that releases the memory to the central processing unit) after an input-output processor memory access cycle. In this case, the central processing unit clock logic would go static and wait for memory access and the input-output processor would also stop the next time it required memory access.

Troubleshooting, including thermal cycling, has not caused the problem to recur. The problem cannot be further isolated by analysis, so the actual cause cannot be determined.

This anomaly is closed.

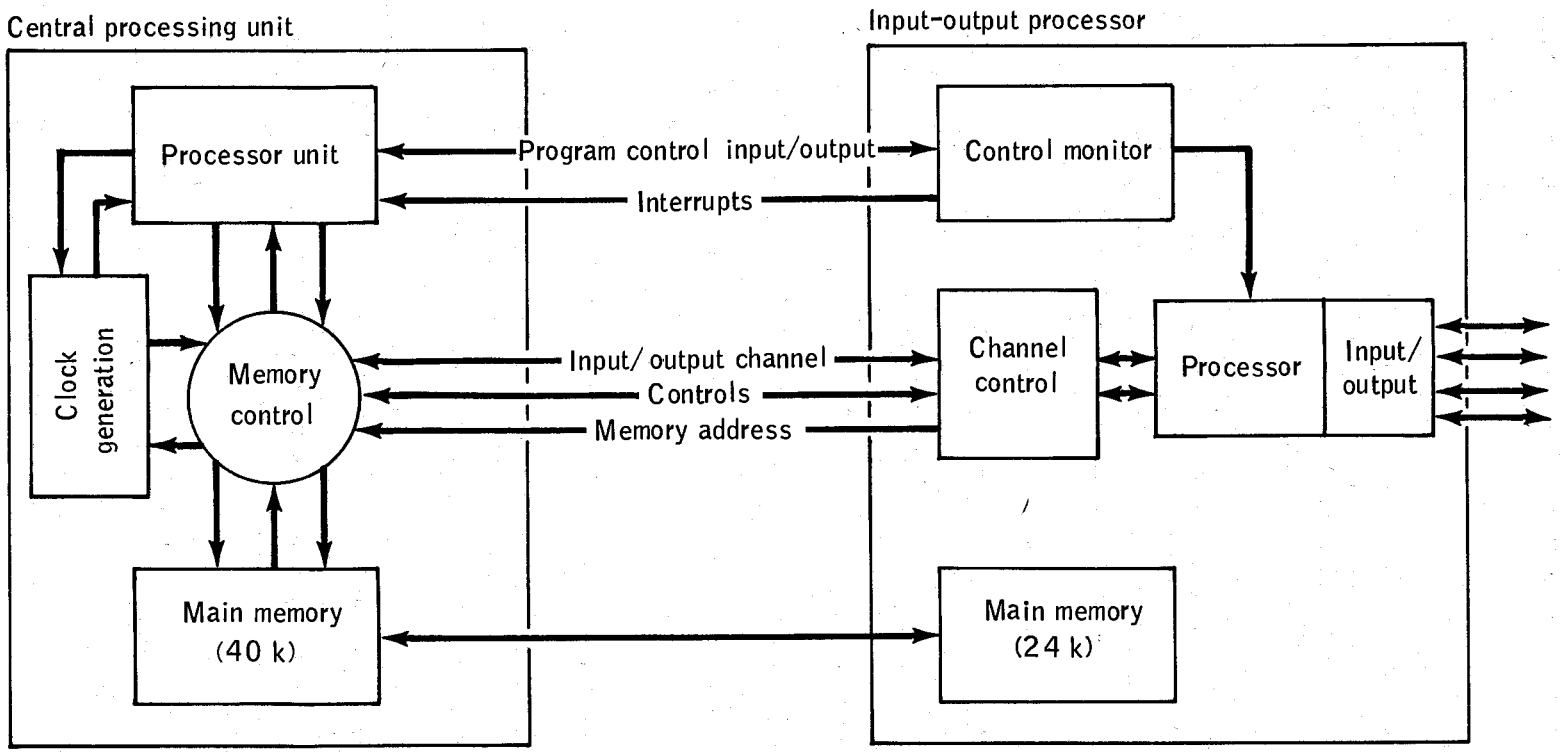

Figure 6-7.- General-purpose computer block diagram.

6.7 LEFT-HAND OUTBOARD ELEVON PRIMARY DIFFERENTIAL PRESSURE MEASUREMENT WAS INTERMITTENT

The left-hand outboard primary differential pressure measurement (channel 3) indicated close to zero throughout the first captive-active flight and until about 26 minutes into the second flight. At that time, the indicated pressure increased to a normal minus 700 lb/in^2, and the secondary differential pressure measurements for the other three channels and the valve drive currents for all four channels experienced transient changes.

The aerosurface actuator consists of four independent analog hydraulic actuators operating in parallel. Each actuator is controlled by an independent electromechanical servo loop. The primary differential pressure measurement in each loop is used as acceleration feedback. The overall actuator will be underdamped if only one of the four channels has acceleration feedback, so the system can operate with only two of the four primary differential pressure measurements operable.

The problem must be an intermittent open circuit in the active loop (i.e., in the transducer, the wiring between the transducer and the aerosurface amplifier, or in the feedback loop portion of the aerosurface amplifier) becasue the secondary differential pressures and valve drive currents responded when the measurement indication became normal.

The system is "fail safe" with the existing intermittent since two more of the three remaining channels must fail before the actuator becomes underdamped. Troubleshooting is planned should an additional redundant measurement fail.

This anomaly is open.

6.8 NOSE LANDING GEAR DOOR THRUSTER TRIGGERING PAWL DID NOT FUNCTION

The nose landing gear door thruster actuator trigger was pulled by firing of the backup pyrotechnic system. However, the pawl movement did not rotate the arm that releases the bungee spring (figs. 6-8 and 6-9).

The door thruster is required to provide an initial push to overcome high aerodynamic pressure, high sideslip angle, high seal stiction, and higher differential pressure. Several ground tests using a pneumatic bottle all resulted in normal operation; however, ground tests using pyrotechnic devices and a pawl retention spring of higher force resulted in failure to release the bungee spring, repeating the inflight failure mode.

Operation of the spring bungee is not required for proper nose landing gear operation for the Approach and Landing Test Program. The system is being redesigned for Orbital Flight Test.

This anomaly is closed for the Approach and Landing Test Program.

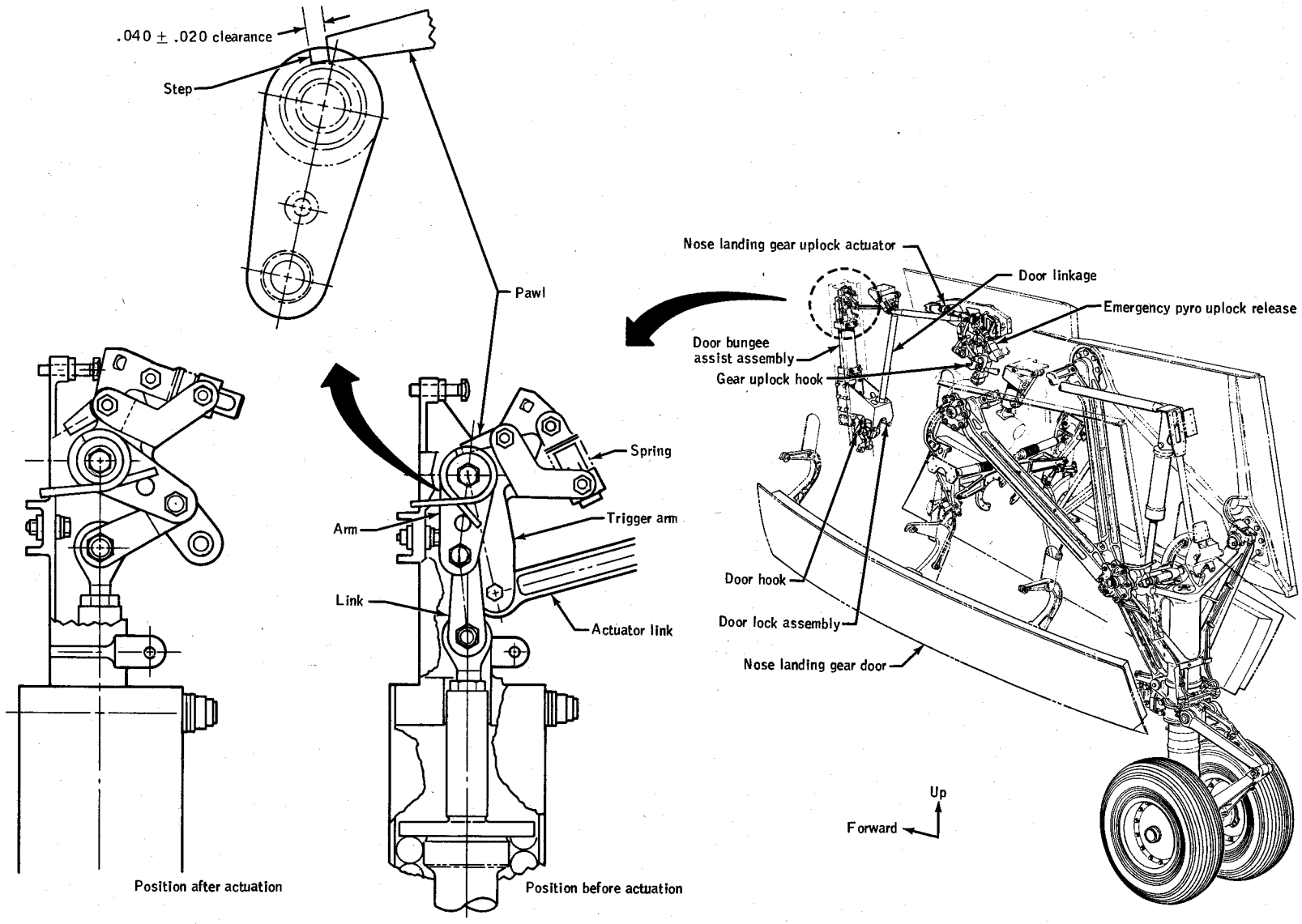

Figure 6-8.- Nose landing gear mechanism.

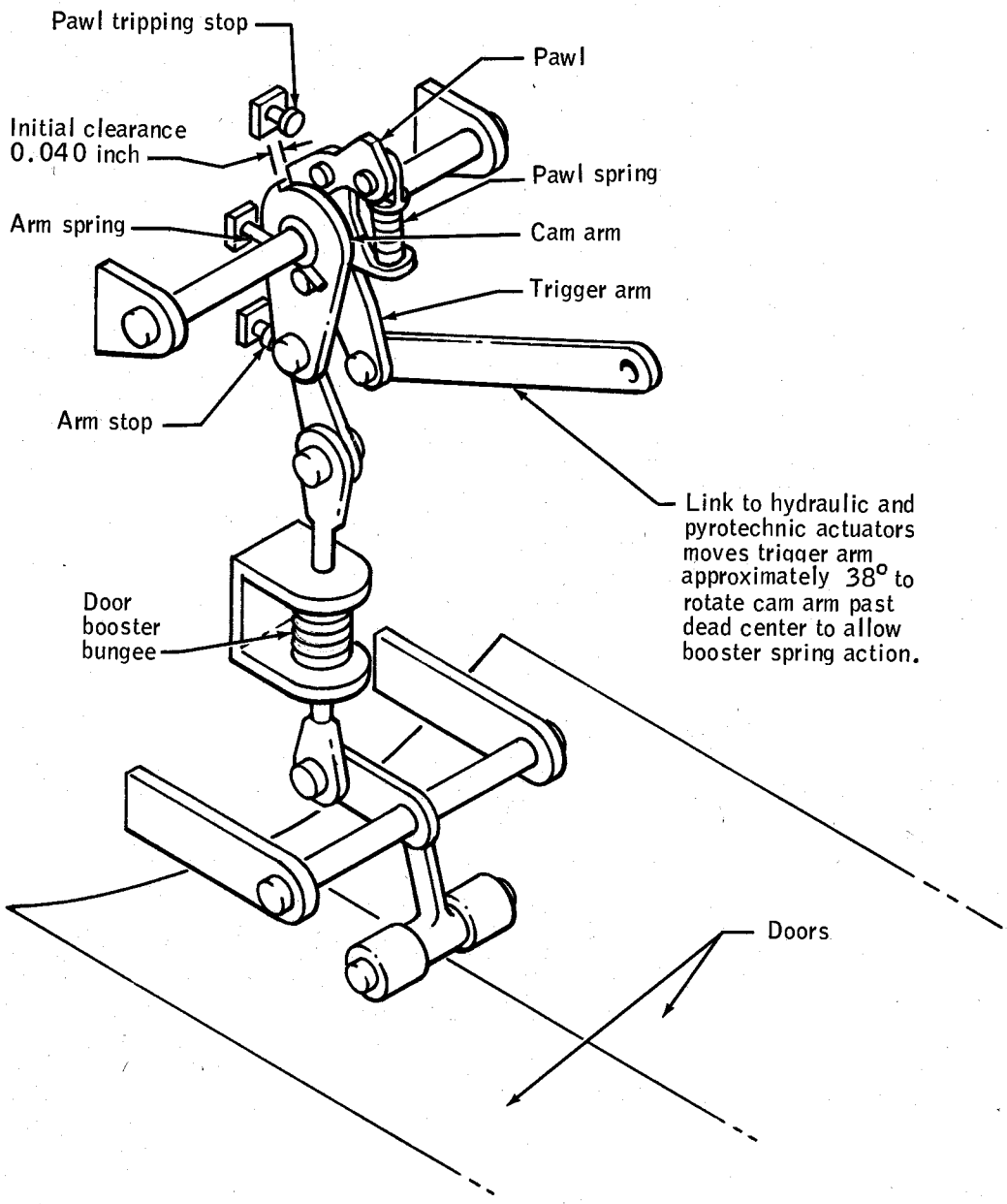

Figure 6-9.- Forward landing gear door booster bungee.

6.9 AUXILIARY POWER UNIT 1 EXHAUST DUCT TEMPERATURE MEASUREMENT FAILED

During operation of auxiliary power unit 1 on the third flight, the exhaust duct temperature reading went off-scale high and triggered the caution and warning signal. The redundant measurement, not displayed in the cabin, showed normal temperature readings which indicated that the off-scale high reading was probably the result of an open circuit.

Postflight examination confirmed that the sensor lead had broken at the flex stress joint adjacent to the brazed joint support clamps (fig. 6-10).

Corrective action taken for the remainder of the Approach and Landing Test flights includes (1) the addition of fill insulation (fig. 6-10) to better protect the copper lead from the high temperature of the boss and provide support to dampen lead movement and minimize flex stress by the hold-down clamp and (2) provide readout of the redundant temperature measurement in the cabin for crew monitoring. A probe-type sensor in the boss is being considered for Orbital Flight Test.

This anomaly is closed for the Approach and Landing Test Program.

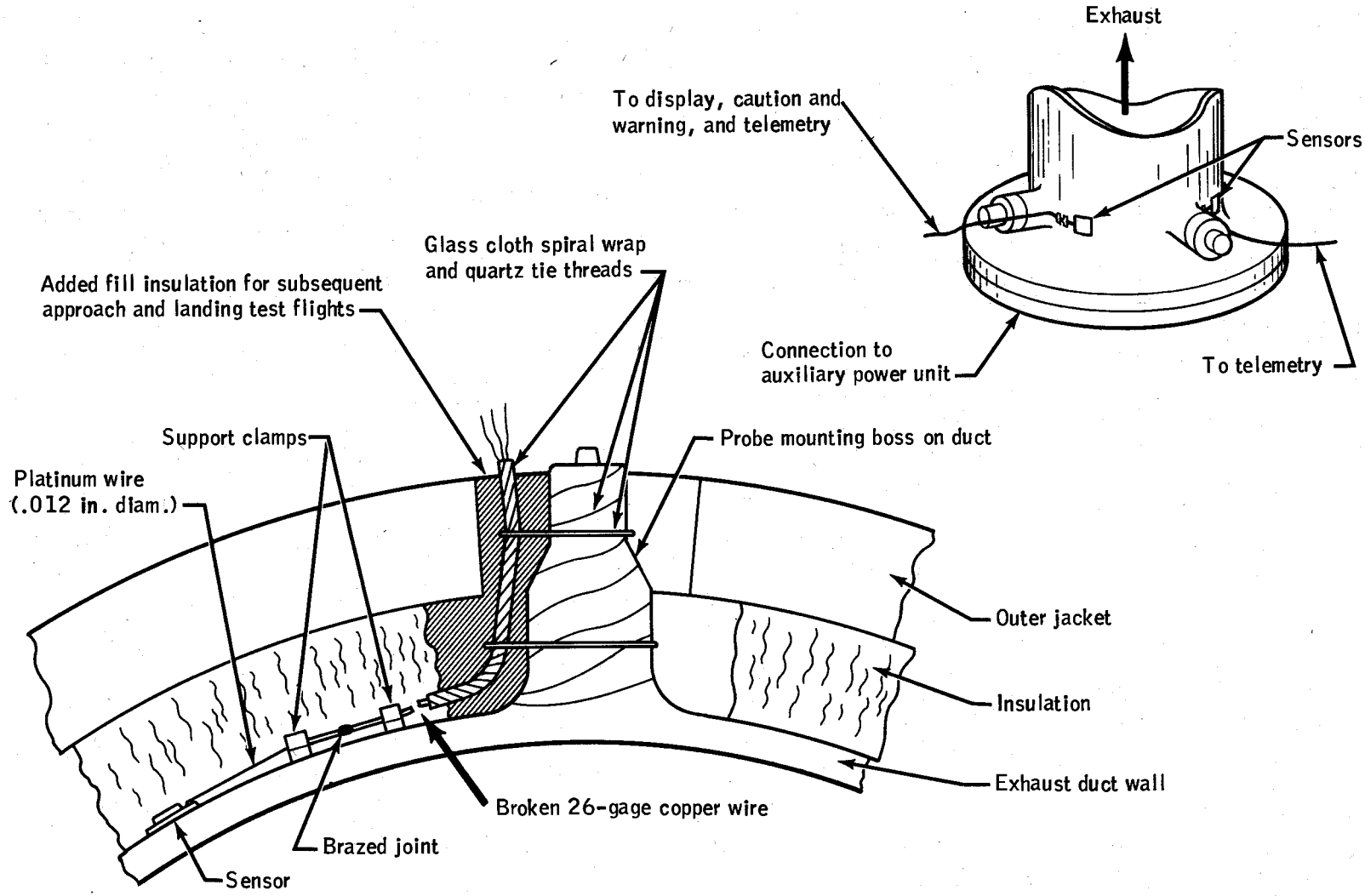

Figure 6-10.- Auxiliary power unit exhaust duct temperature measurement.

7.0 FLIGHT TEST ASSESSMENT

7.1 FIRST FLIGHT

Objectives of captive-active flight 1A were as follows:

a. Verify performance of selected Orbiter subsystems, integrated subsystems, and ground operations in a reduced-speed/altitude environment, especially with those operations affecting Orbiter control surface deflections.

b. Verify the Orbiter stability and performance in the mated configuration with combined operation of the primary flight control system in the control stick steering and manual direct modes, the auxiliary power units, hydraulics, and structure.

c. Obtain Orbiter vertical tail buffet data during operation of the speed brake and rudder.

The above objectives were satisfactorily accomplished and an assessment of subsystem data indicated that the next flight could proceed as planned.

7.2 SECOND FLIGHT

Objectives of captive-active flight 1 were as follows:

a. Verify separation conditions in preparation for free flight.

b. Perform mated vehicle flutter clearance tests with active Orbiter control surfaces.

c. Obtain Orbiter vertical tail buffet data during operation of the speed brake and rudder.

All flight objectives were satisfactorily accomplished. The data indicate that for the approach and landing tests (1) the separation conditions planned for free flight are satisfactory, (2) the mated configuration is flutter free for the flight envelope, and (3) speed brake operation will produce no significant buffet.

7.3 THIRD FLIGHT

Objectives of captive-active flight 3 were as follows:

a. Verify separation conditions in preparation for free flight.

b. Demonstrate the operational separation profile and procedures.

c. Demonstrate Orbiter landing gear deployment in an air loads environment.

All of the objectives were satisfactorily accomplished. Results indicate that (1) the separation conditions are satisfactory and will be used during the free flights, (2) the operational separation profile and procedures were satisfactorily demonstrated, and (3) the landing gear deployment operation and deployment time were satisfactory.

7.4 FLIGHT TEST REQUIREMENTS STATUS

Flight test requirements accomplished for the three flights are summarized in table I.

TABLE I.- FLIGHT TEST REQUIREMENT SUMMARY

Requirement		Satisfied		
Number	Title	1A	1	3
	Primary FTR's			
08HV001e	Flutter/Acoustics/Vibrations			
	225 and 270 KEAS flutter	-	Yes	-
	Acoustic/Vibration	Yes	Yes	-
08HV001f	Vertical Tail Buffet			
	180 KEAS	Yes	-	-
	225 and 260 KEAS	-	Yes	-
79HV013b	Small Signal Verification			
	FCS CSS/MD tests	Yes	-	-
	Autoland Fly Through	-	Yes	-
90HV001	Simulated Separation Flight			
	Verification	-	Yes	Yes
	Demonstration	-	-	Yes
90HV003	Aborted Launch Recovery	-	Yes	-
91HV004	Reduced Speed Checks	Yes	-	-
	Free Flight Profile Simulation	-	-	Yes
	Data Gathering FTR's			
08HV001g	747 Horizontal Tail Loads	-	Yes	-
45HV001	Fuel Cell Performance	Yes	Yes	-
38HV002	Window Conditioning	-	Yes	-
71HV003	IMU Performance	Yes	Yes	-
71HV004a	Air Data Probe Deploy	-	-	Yes
72HV001	Computer Performance	Yes	Yes	-
90HV005	UHF Voice Comm Link	Yes	-	-
61HV001	ALT ARS Performance	Yes	Yes	-
63HV001	ALT ATCS Performance	Yes	Yes	-
73HV001	Displays/Controls	Yes	-	-
74HV002	MSBLS Performance	-	Yes	-
74HV003	Operational TM Downlink	Yes	-	-
74HV004	TACAN	-	Yes	-
75HV001	Flight Recorders	Yes	-	-
76HV001	Electrical Power Distribution	Yes	Yes	-
91HV002	APU/Hydraulics/Flight Control	Yes	Yes	-
91HV003	Mated Gear Deployment	-	-	Yes

8.0 CONCLUSIONS

1. Based on the results of the captive-active flight tests, the free flight phase of the Approach and Landing Test Program may proceed as planned.

2. Orbiter hardware and software performance was satisfactory for the Approach and Landing Test requirements.

3. The captive-active flights demonstrated that the operational profile and separation conditions compared favorably with wind tunnel test results and analyses and are satisfactory for free flight. The flights also demonstrated that the separation procedures are satisfactory.

4. Support operations, including turnaround, mission control, and mission evaluation, are satisfactory.

9.0 REFERENCES

1. Pixley, P. T., and Smith, L. F.: C-Band Trajectory Determination for Captive/Active Flight 1A. Johnson Space Center Report No. FM82 (77-286). July 18, 1977,

2. Smith, L. F.: C-Band Trajectory Determination for Captive/Active Flight 1. Johnson Space Center Report No. FM82 (77-330). August 23, 1977.

3. Smith, L. F.: C-Band Trajectory Determination for Captive/Active Flight 3 and Free Flight 1. Johnson Spae Center Report No. FM82 (77-351). September 20, 1977.

APPENDIX A - VEHICLE DESCRIPTION

Figure A-1 shows the configuration of the mated Shuttle carrier aircraft and Orbiter 101. Figure A-2 shows the arrangement of Orbiter 101 for the Approach and Landing Test Program. The configuration is, in many respects, unique for the Approach and Landing Test flights. These unique features are listed in table A-I.

A.1 ORBITER 101

A.1.1 Structures

A.1.1.1 Forward Fuselage

The forward fuselage is a semimonocoque structure comprised of skin, stringers, longerons, bulkheads, and frames. It consists of four major assemblies: upper, lower, wheel well, and reaction control subsystem module. The upper assembly contains windshield panels, windows, ejection hatches, star tracker access panels, and antenna support provisions. The lower assembly contains the crew side hatch, an emergency ejection access door, hoisting and jacking provisions, crew module support, and antenna support provisions. The wheel well structure supports all the mechanism for the nose landing gear. The reaction control subsystem module serves only as an aerodynamic fairing and to maintain structural continuity.

A.1.1.2 Crew Module

The crew module is a pressure-tight vessel supported within the forward fuselage. The module is constructed of aluminum alloy plate with integral stiffening stringers and internal framing welded together. Equipment support is provided for the environmental control and life support subsystem, avionics, displays and controls, crew accommodations and emergency escape.

A.1.1.3 Mid Fuselage

The mid fuselage consists of primary structure between the forward and aft fuselage and wing carry-through structure. The forward and aft ends are open, with reinforced skin and longerons interfacing with the bulkheads of the adjacent structure. This section, which is constructed mostly of aluminum, provides support for equipment tie-down fittings, payload bay door hinges, subsystem components and has mounting provisions for the wing glove. Frame trusses and stabilizing members are boron/aluminum composite tubes.

A.1.1.4 Aft Fuselage

The main elements of the aft fuselage are the forward bulkhead with web front face, internal thrust structure, outer shell and floor structure, base heat shield, and secondary structure for systems support. It interfaces with the wing, vertical fin, mid fuselage, body flap, orbital maneuvering subsystem/reaction control subsystem pods, and external tank. Support is provided for avionics, electrical, hydraulic, environmental control and auxiliary propulsion subsystem components.

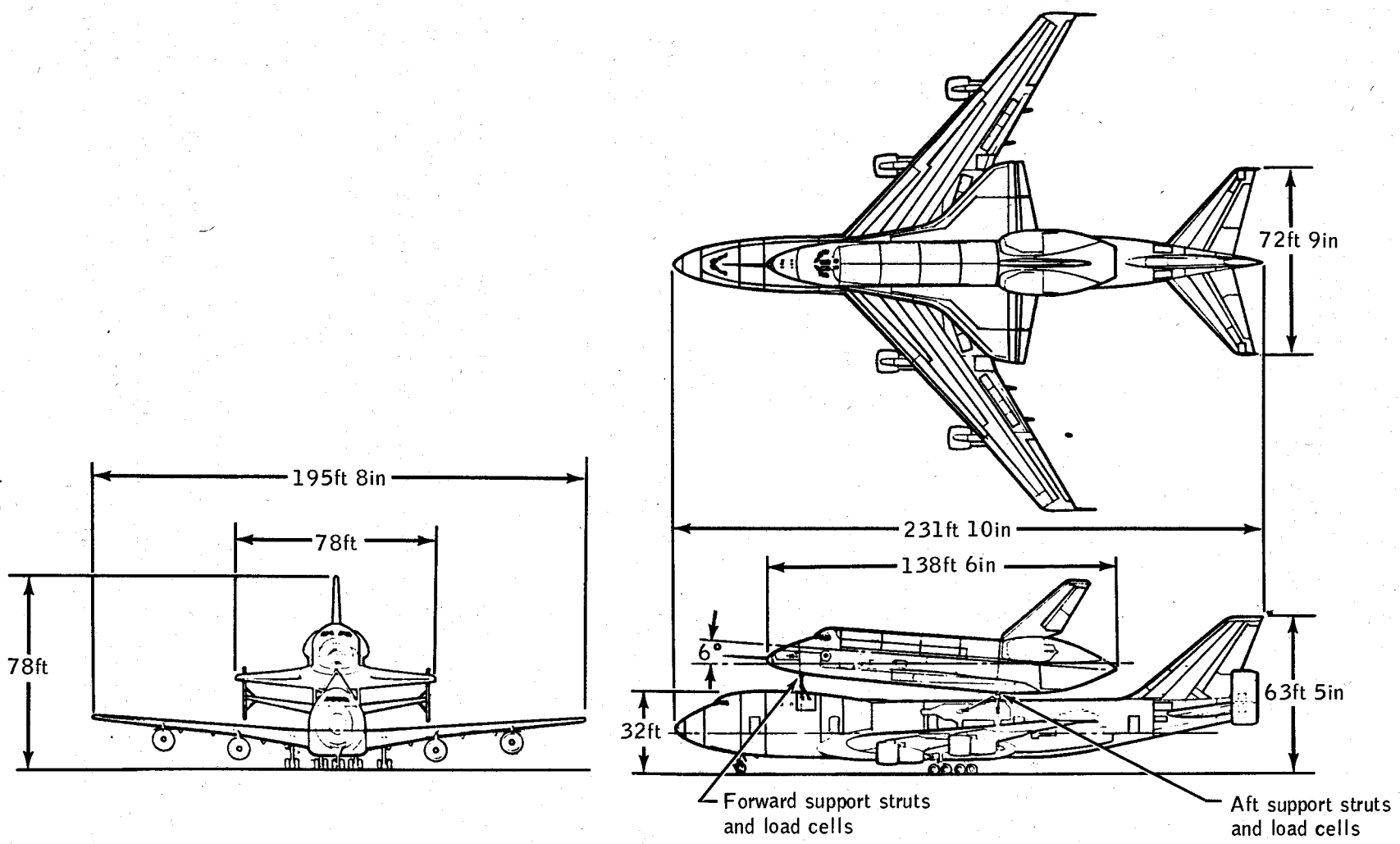

Figure A-1.- Orbiter 101/carrier aircraft configuration.

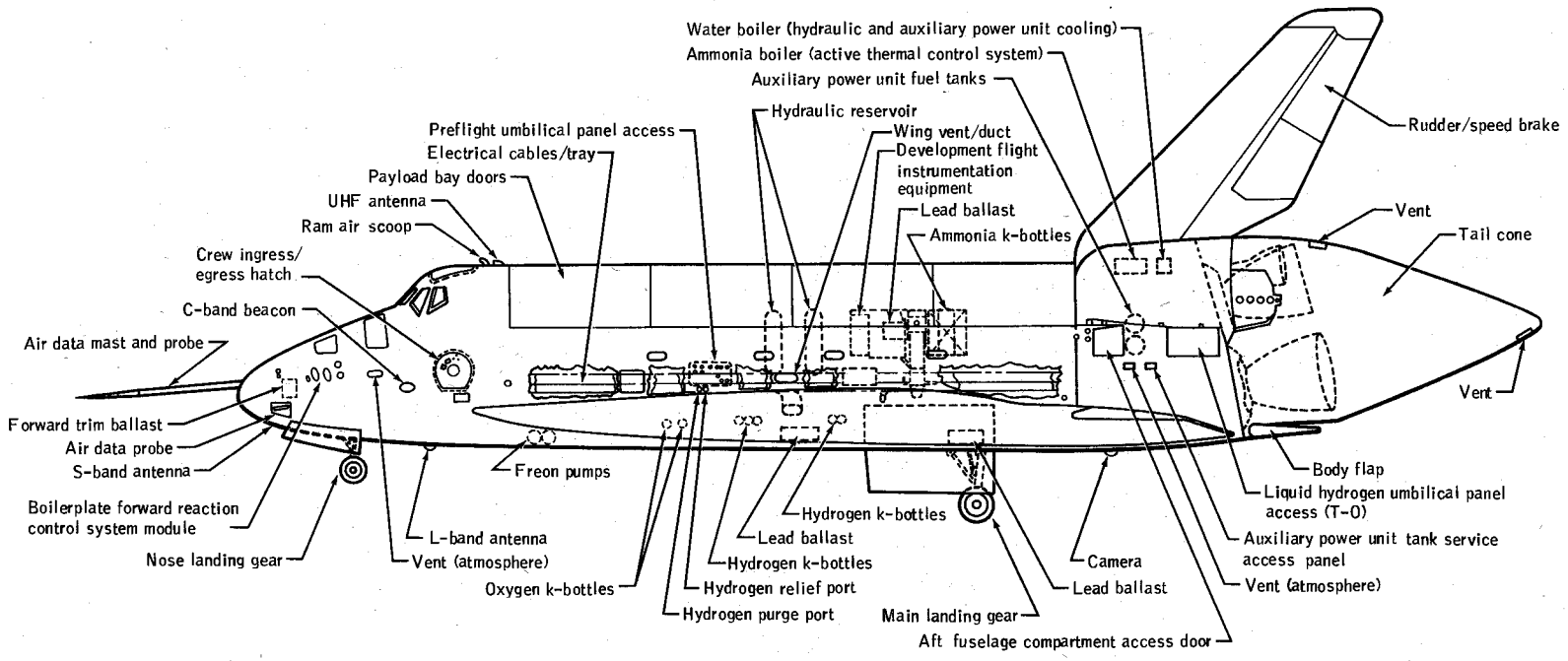

(a) Side

Figure A-2.- Orbiter 101 configuration for approach and landing test.

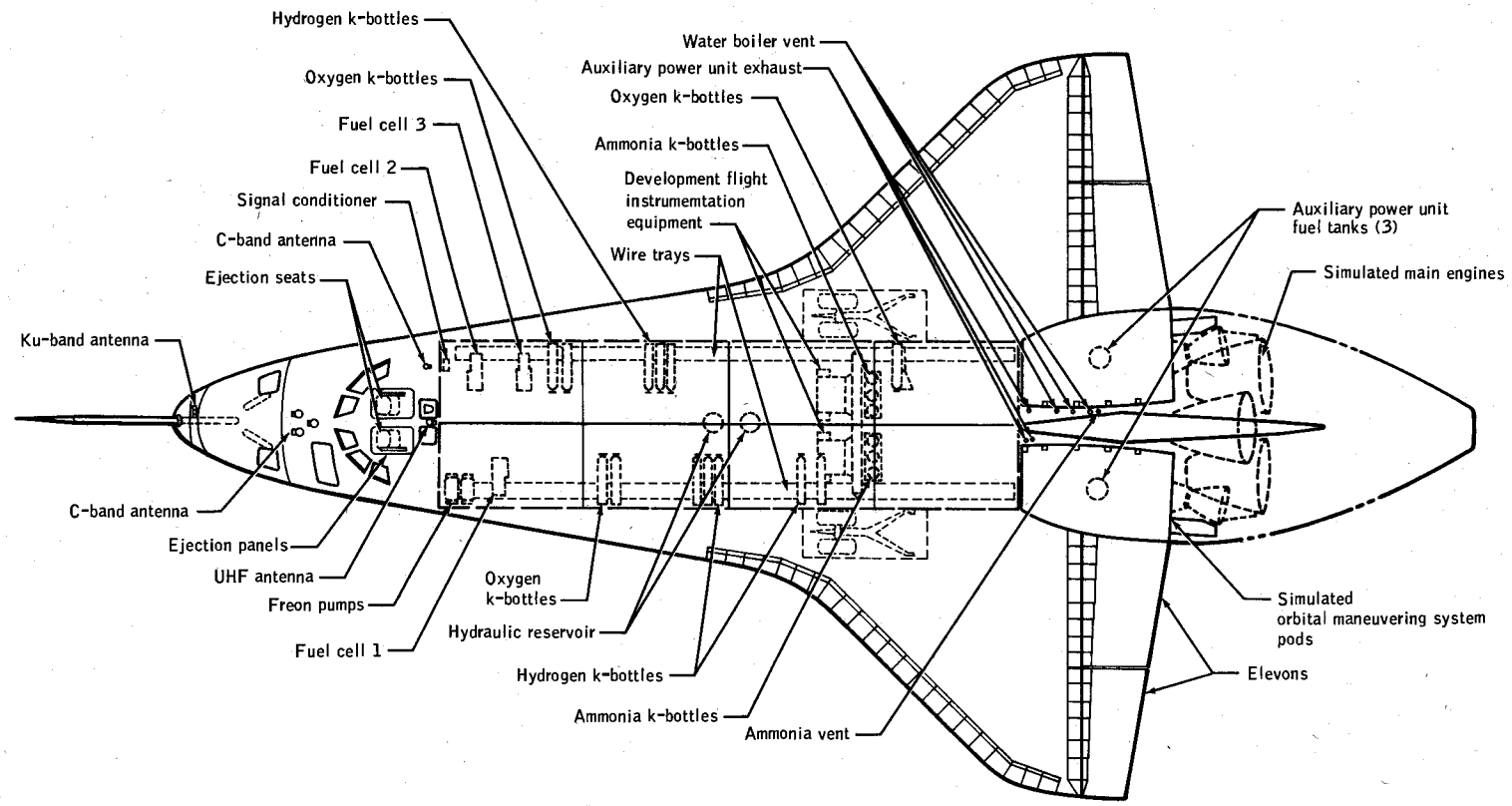

(b) Top

Figure A-2.- Orbiter 101 configuration for Approach and Landing Test.

A.1.1.5 Payload Bay Doors

The payload bay door is 60 feet long with a surface area of over 1600 square feet. It consists of two panels that open at the center line. The doors are latched at the center line, forward fuselage, and aft fuselage. The door primary structure is of honeycomb panels and frame construction employing composite materials. The door frames are made of multiple graphite/epoxy tape and fabric layups. The face sheets consist of graphite/epoxy tapes and graphite/epoxy fabric.

A.1.1.6 Wings

The wing subsystem provides conventional aerodynamic lift and control. The forward wing box aerodynamically blends the wing leading edge into the fuselage. The main wing box structure transfers loads to the fuselage, provides for stowage of main landing gear, and reacts a portion of the main landing gear loads. Elevons provide flight control and are hinged to the rear spar that extends the full span of the wing.

A.1.1.7 Vertical Tail

The vertical tail provides aerodynamic stability during entry, cruise flight, and landing. It consists of a structural fin surface and the rudder/speed brake control surface together with actuation subsystems. The structural fin consists of stiffened skins with mechanically attached ribs and stringers which provides a torque box for primary loads. The rudder/speed brake control surface is attached through rotating hinge points.

A.1.1.8 Tail Cone

The tail cone structure is of conventional aluminum skin/stringer construction. The body flap fairing and trailing edge closeout were constructed of fiberglass.

A.1.1.9 Body Flap

The body flap is basically of aluminum honeycomb construction. It is a two-spar configuration incorporating four actuator ribs and eight aluminum honeycomb stability ribs. Upper and lower honecomb panels join a full-depth honeycomb trailing edge assembly at the rear spar.

A.1.2 Thermal Protection

The thermal protection system is a passive system that maintains acceptable outer skin temperatures on the operational Orbiter. Since Orbiter 101 does not experience entry environments during the Approach and Landing Test Program, the actual thermal protection system is not required. Simulated reusable surface insulation is used in areas where maintenance of the outer mold line is required for aerodynamic reasons.

A.1.3 Passive Thermal Control

The thermal control system consists of passive equipment, fibrous bulk insulation blankets, multilayer insulation blankets, and fasteners to maintain thermal control of all compartments. The thermal control system is installed on Orbiter 101 only where it is functionally required; however, the complete forward-fuselage thermal control is installed to minimize changes in converting to an operational vehicle. The thermal control system is designed to maintain the crew compartment to acceptable thermal limits, to maintain the hydraulic subsystem water boilers above the freezing point, and to maintain the auxiliary power unit servicing panel above the freezing point of hydrazine.

A.1.4 Purge, Vent and Drain

Orbiter 101 is equipped with a purge system to maintain the thermal environments of the forward reaction control subsystem, mid fuselage, and aft fuselage compartments at levels consistent with the equipment located within those compartments.

The vent system consists of 16 open holes through the Orbiter outer mold line. During ascent or descent, vent/repressurization air freely exits or enters through the vent ports to maintain control of internal compartment pressure. Each vent is fitted with a debris screen. One vent port also serves as a disconnect for the purge system and has been designed to accommodate the ground support equipment onboard ducting interface.

The drain system includes a passive system and an active system. The passive system consists of holes drilled in selected structural elements to permit free water drainage. The active drain system consists of three elements each designed to remove water from inaccessible portions of the fuselage while the vehicle is on jacks.

Orbiter 101 is equipped with a window cavity conditioning system to maintain the window cavities free of fog or frost during ground and flight phases. The system consists of six distinct subsystems. They service the left-hand inner window cavities, right-hand inner window cavities, left-hand outer cavities, right-hand outer cavities, and side hatch inner and outer cavities. Each subsystem has both a purge and vent circuit.

A.1.5 Mechanical

A.1.5.1 Separation

The separation system provides the capability to release the Orbiter from the carrier aircraft. This is accomplished by pyrotechnic frangible bolts at three structural attachments, one forward and two aft. Load sensors at each of the structural attachment interfaces provide measurement of the loads between the Orbiter and carrier. Separation of electrical umbilicals is accomplished by pull-apart connectors subsequent to structural attachment separation using relative separation motion. Details of the mechanical separation interface are shown in figure A-3. The electrical interface is schematically shown in figure A-4.

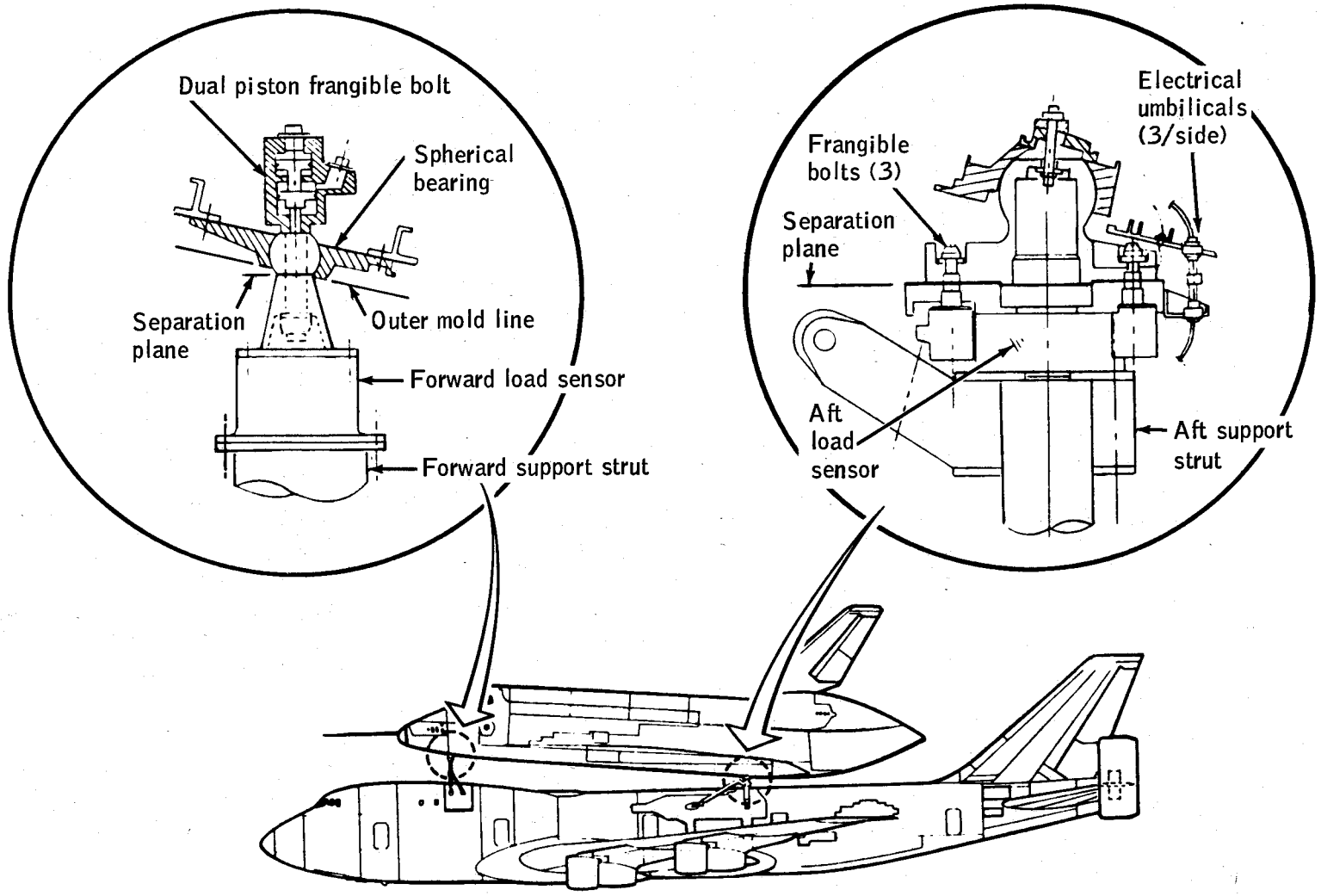

Figure A-3.- Mechanical seperation system.

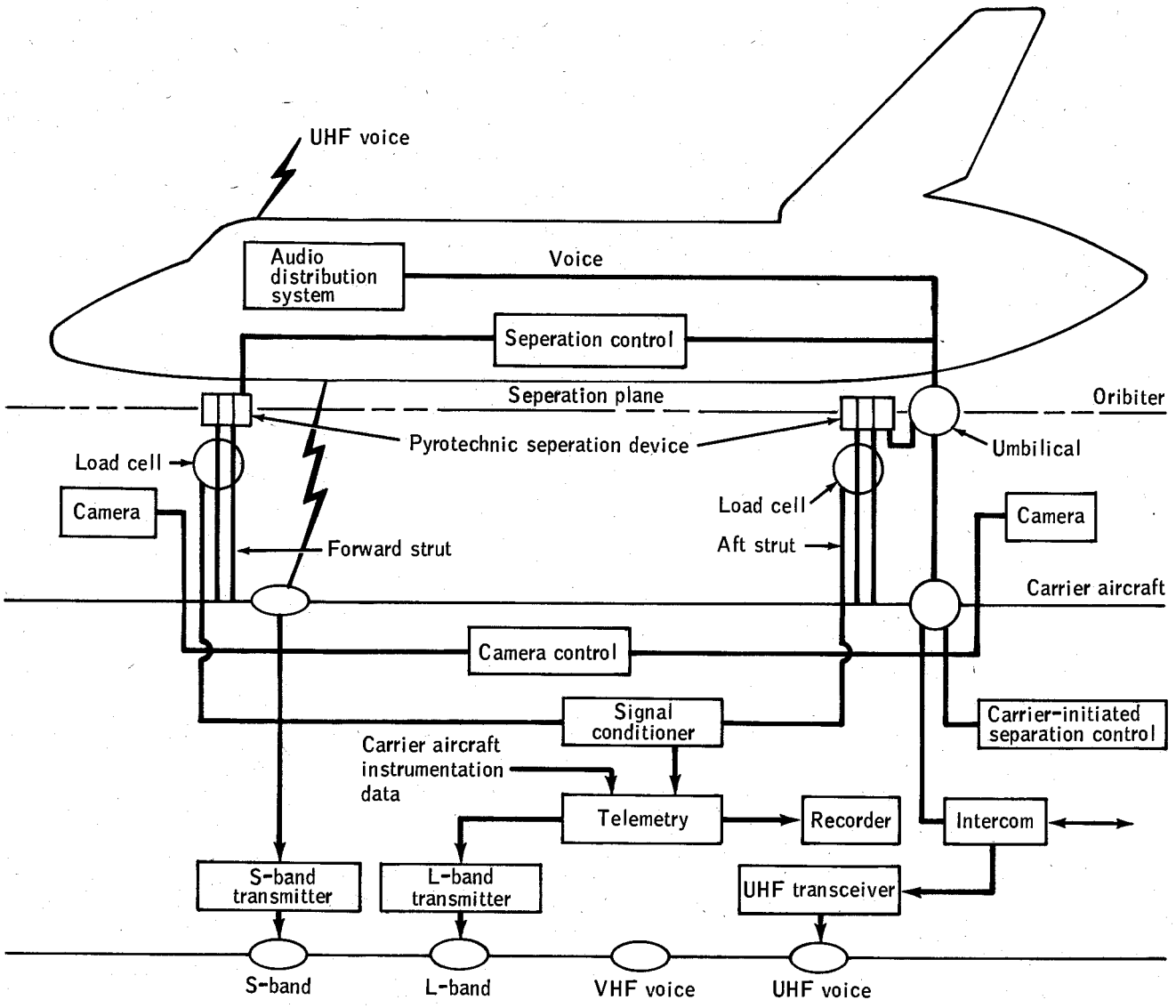

Figure A-4.- Seperation monitor and control system.

A.1.5.2 Landing and Deceleration

The landing and deceleration system employs a fully retractable tricycle landing gear designed to provide safe landing at speeds up to 221 knots. Dual wheels and tires are used. The shock struts are of conventional aircraft design. Braking is accomplished using brakes with antiskid protection.

A.1.5.3 Surface Control

Aerodynamic control surface movement is accomplished by hydraulically powered actuators that position the elevons and by hydraulically powered drive units that position the body flap and combination rudder/speed brake through geared rotary actuators. Three redundant systems supply the necessary hydraulic power.

A.1.5.4 Payload Bay Door Latching

The payload bay doors are manually latched closed for the Approach and Landing Test Program. In this configuration, the payload bay doors act as part of the Orbiter structure.

A.1.5.5 Yaw and Brake Control

The Commander and Pilot are each provided with a set of control pedals. The pedal sets are interconnected to operate in unison with rudder inputs, but operate independently for brake control. Foot pressure applied to the left pedal will result in left rudder control inputs. Foot pressure applied to the right pedal will result in right rudder control inputs. Toe pressure applied to either pedal causes the pedal to rotate about the pedal shaft and initiates braking action. Both the rudder and brake systems incorporate an artificial feel system to manage crew input forces. Both systems, through mechanical linkages, transfer the crew-initiated displacements to position transducers which, in turn, convert these displacements to electrical signals that are relayed to flight control avionics.

A.1.5.6 Actuation Mechanisms

Actuation mechanisms are included on Orbiter 101 for the ingress/egress hatch, ejection access door and air data probes.

The ingress/egress hatch provides access to the interior of the crew module. The hatch is hinged to open outward and is attenuated to prevent damage to the vehicle when the hatch is allowed to free fall on opening. The hatch is held in the closed/sealed position by a series of overcenter latches. The latches are driven by a hatch latch actuator.

The ejection access door is a manually operated external door that may be opened by ground personnel during an emergency to gain access to the ejection panel jettison handle.

Air data probes and actuators are located one on either side of the Orbiter forward fuselage. The probe senses local pressures and total temperature. For the Approach and Landing Test Program, the probes are held in the deployed position.

The air data nose boom is mounted on a mast that extends forward from the Orbiter nose. The boom consists of a Pitot-static tube, total temperature sensor, and pivoted vanes for sensing angle of attack and sideslip. This boom serves as a backup to the air data probes and to calibrate the Orbiter production air data system.

A.1.6 Hydraulic Power

The hydraulic system provides hydraulic power to the main and nose landing gear, brakes, nose wheel steering, rudder/speed brake, body flap actuators, and elevon actuators. Hydraulic power is provided by three independent systems that are each powered by hydraulic pumps driven by separate auxiliary power units.

A.1.7 Pyrotechnics

Pyrotechnic devices are provided for the following functions.

a. Emergency ejection (seats and overhead panels)

b. Backup release of nose landing gear and nose landing gear door opening

c. Orbiter/carrier aircraft separation

d. Fire extinguisher activation

A.1.8 Power

A.1.8.1 Auxiliary Power Units

The auxiliary power unit subsystem consists of three independent systems that provide mechanical shaft power to hydraulic pumps (one pump per auxiliary power unit). The pumps transmit hydraulic power to aerodynamic surfaces (elevons, rudder/speed brakes, body flap), landing gear, brakes and steering controls.

A.1.8.2 Electrical Power Generation

Three fuel cells provide DC power to the electrical power distribution and control subsystem.

A.1.8.3 High Pressure Gas Storage

The high-pressure gas storage subsystem provides hydrogen and oxygen reactants to the fuel cells for generation of vehicle electrical power. The reactants are stored as high pressure gases at ambient temperatures. The system is used only on Orbiter 101. It will be replaced with a cryogenic reactant storage system having significantly greater capacity for space flight missions.

A.1.9 Propulsion

A.1.9.1 Main Propulsion Subsystem

The main propulsion subsystem was not installed for the Approach and Landing Test Program. Dummy main engines simulating the mass and envelope of the actual engines were installed for the captive-active and free flights.

A.1.9.2 Orbital Maneuvering Subsystem/Aft Reaction Control Subsystem

No subsystem hardware, actual or simulated, was installed.

A.1.9.3 Forward Reaction Control Subsystem

No subsystem hardware, actual or simulated, was installed.

A.1.10 Avionics

A.1.10.1 Guidance, Navigation and Control

The guidance, navigation and control subsystem includes the equipment required for automatic and manual control capability, provision of guidance commands that drive control loops and provide displays to the crew, and inertial navigation updated by RF navigation aids for approach and landing.

A.1.10.2 Communications and Tracking

The communication subsystem consists of the RF processing and distribution equipment necessary for reception, transmission, and distribution of Orbiter and ground-originated voice; transmission of PCM data; and carrier aircraft relay of PCM data. The subsystem also includes TACAN navigational aids, radar altimeter, and microwave scan beam landing system. Off-the shelf aircraft-type UHF transmitter/receivers and aircraft-type intercom stations and controls were used. An S-band FM transmitter was used for data transmission.

A.1.10.3 Displays and Controls

The displays and controls subsystem consists of those equipments and devices required by the crew to supervise, monitor, and control the various Orbiter operational subsystems.

A.1.10.4 Instrumentation

The instrumentation subsystem is made up of operational instrumentation and development flight instrumentation. The development flight instrumentation is used for development flights only and will be removed after the development phase of the program.

The Orbiter 101 tape recorders are designed to store and reproduce digital and analog flight data both singularly and in combination as programmed prior to flight. A maintenance recorder records digital data. A wideband recorder records the outputs of 12 frequency division multiplexers.

A.1.10.5 Data Processing

The data processing system provides onboard data processing, data transfer, data entry, and data display associated with operations of the Orbiter avionics.

A.1.10.6 Electrical Power Distribution and Control

The electrical power distribution and control subsystem distributes DC vehicle power and generates AC power for use of the various subsystems throughout all of the Shuttle missions and mission phases. Also included as part of the subsystem are the events control and pyrotechnic sequencing functions.

A.1.10.7 Flight Software

The Orbiter 101 software subsystem provides data processing capabilities for guidance, navigation, and control; communication and tracking; displays and controls; system performance monitoring; subsystem sequencing; and selected ground functions.

A.1.11 Environmental Control and Life Support

The environmental control and life support system includes the atmospheric revitalization subsystem, life support functions, and the active thermal control system.

A.1.11.1 Atmospheric Revitalization

The following functions were provided for the Approach and Landing Test Program: passive cabin pressure control, emergency smoke removal, humidity and temperature control, and avionics equipment temperature control. The atmospheric revitalization system is operated continuously during all phases of a flight.

A.1.11.2 Life Support

The life support functions include water storage and fire detection and suppression. The water condensate resulting from humidity control collected from the cabin heat exchanger and the water produced from the fuel cell reaction is collected and stored. The fire detection and suppression subsystem detects smoke in the avionic bays and the crew compartment. Portable fire extinguishers are provided for the crew compartment. Fixed fire extinguishers for each avionics bay are actuated from the flight deck.

A.1.11.3 Active Thermal Control

The active thermal control provides for the rejection of vehicle waste heat and active thermal control of selected equipment. This system consists of fluid transport loops, heat exchangers, an ammonia boiler system, and coldplate networks in the aft fuselage, mid body and on the development flight instrumentation pallet.

A.1.12 Crew Escape System

The crew escape system provides emergency escape capability for the flight crew under stationary conditions on the ground, or in flight. The system includes: two ejection seats, ejection panels above each seat, ejection guide rails and support structure, and a redundant energy transfer system consisting of pyrotechnic devices.

A.1.13 Crew Equipment

The crew equipment consists of items such as clothing, survival kits, cameras, voice recorders, and flight data file. The following equipment was provided for the Approach and Landing Test Program.

A.1.13.1 Crew Support Equipment

The crew support equipment for each crewman consists of clothing, helmet, shroud line cutter, integrated harness, water container, urine container, and spur assemblies for foot retention in case of emergency ejection. The integrated harness interfaces with the ejection seat and also interfaces with the descent device for emergency escape from a stationary Orbiter.

A.1.13.2 Ejection Seat and Parachute Survival Kits

The survival kits contain items that would be used for crew survival in water or on land in the event that emergency ejection from the Orbiter was necessary.

A.1.13.3 Carry-On Oxygen System

The carry-on oxygen system provides breathing capability to the crew through the entire profile of the Approach and Landing Test Program. This includes cabin air for breathing under sea-level conditions, supplemental oxygen during flight, and 100-percent oxygen for a contaminated cabin atmosphere, or during ejection. A communication microphone is also provided with the oxygen mask.

A.1.13.4 Sixteen-Millimeter Camera Systems

The following camera systems are provided.

a. Three cameras are located in the cabin: camera 1 records the panel F5 clock and panel F6 instruments, camera 2 records the Commander's activity, and camera 3 views the approach and landing from the forward right-hand window.

b. Two cameras are located in one of the main landing gear wheel wells: camera 1 views the door release mechanism and camera 2 views the landing gear wheel.

c. Two cameras are located in the nose landing gear wheel well: camera 1 views the door release mechanism and camera 2 views the landing gear wheel.

d. A centerline track camera located on the underside of the aft fuselage views deployment of the nose landing gear, left main landing gear, and motion of the landing gear during rollout.

e. Orbiter/carrier aircraft separation cameras are located on the top of the carrier aircraft: camera 1 views the two aft attach points and camera 2 views the forward attach point.

A.1.13.5 Crew Intercom Recorder

Two recorders are provided on the mid deck to record crew voice transmissions.

A.1.13.6 Crew Ancillary Equipment

This equipment includes such items as sunglasses, chronographs, and writing materials.

A.1.13.7 Flight Data File

The flight data file consists of onboard documentation and related crew aids. It includes checklists, schematics, charts, and cue cards.

A.1.13.8 Crew Removal Radio System

This system consists of two VHF/FM handheld radios which are used for communications between the ground crew and Orbiter crew during post-landing operations after vehicle power-down.

A.1.13.9 Protective Breathing System

This system consists of two portable breathing systems which provided compressed air through breathing masks to allow egress on the ground in a hazardous atmosphere.

A.2 SHUTTLE CARRIER AIRCRAFT

The Shuttle carrier aircraft, designated NASA 905, is a Boeing 747 that has been modified to serve as a transporter vehicle for the Orbiter. Permanent modifications were made to the basic structure and subsystems that remain with the aircraft. Other modifications are removable as kit hardware.

Government-furnished equipment installed in the carrier aircraft consists of a crew bailout system, L-band telemetry equipment, a C-band system, a UHF transceiver, and two separation cameras. The crew bailout system consists of (1) an escape tunnel from the flight deck to the cargo bay, (2) a pyrotechnic system for bursting windows to provide depressurization through the passenger compartment and for cutting an egress port in the fuselage structure, and (3) an aerodynamic spoiler that extends through the egress port.

Permanent and removable modifications are shown in figures A-5 and A-6, respectively.

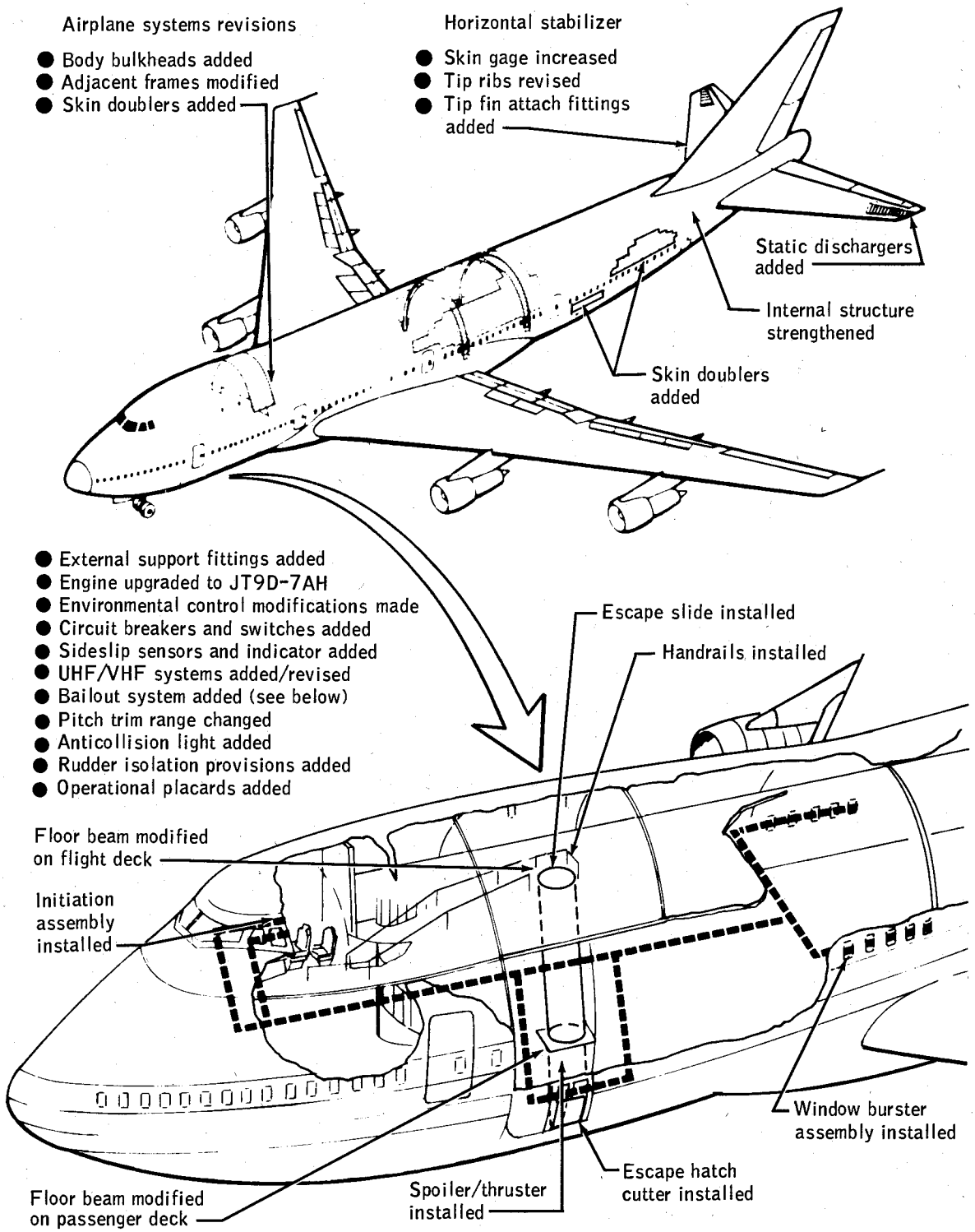

Figure A-5.- Carrier aircraft permanent modifications.

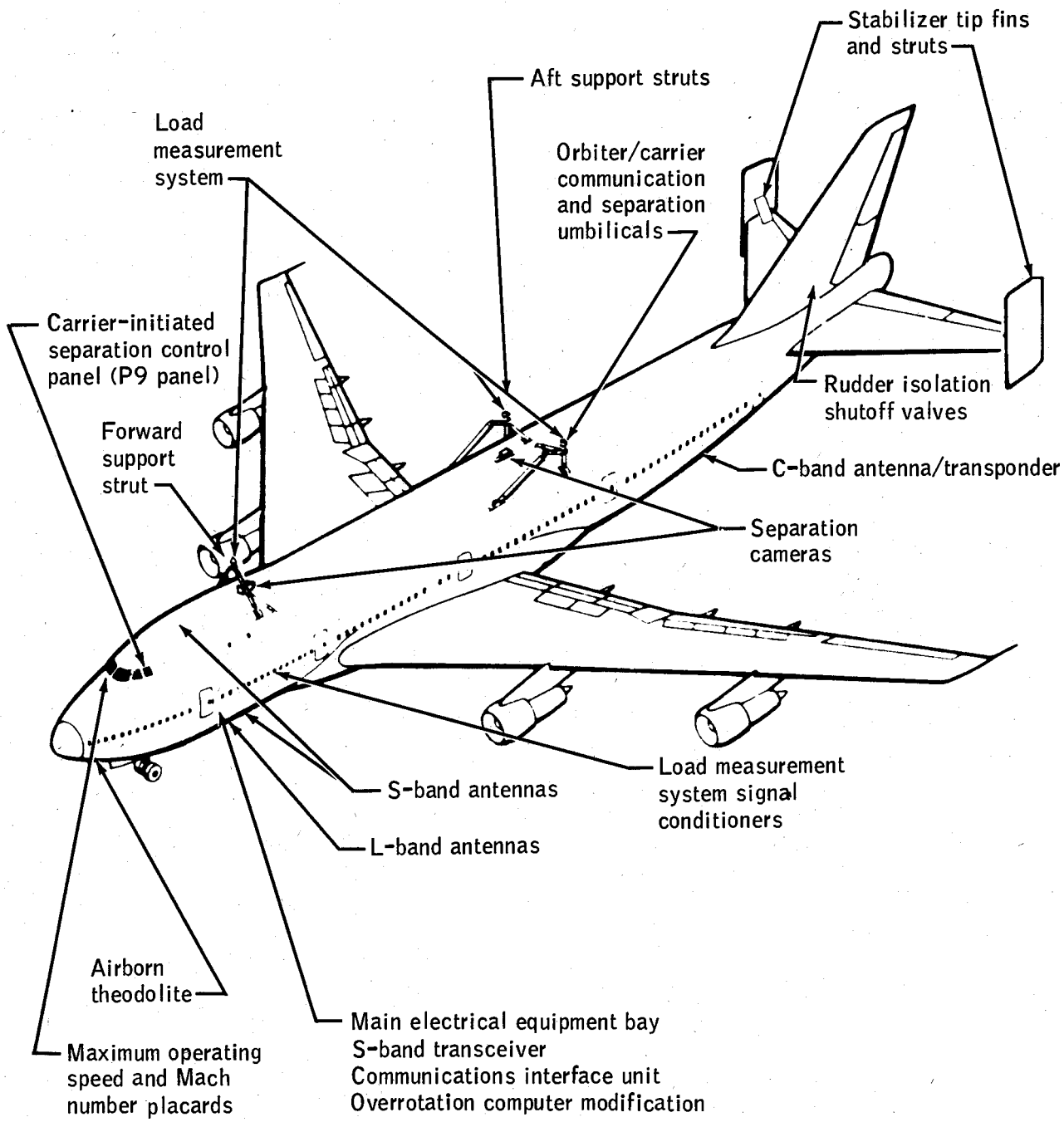

Figure A-6.- Carrier aircraft removable modifications.

TABLE A-I.- ORBITER 101 UNIQUE FEATURES
FOR THE APPROACH AND LANDING TEST PROGRAM

Subsystem/Component	Description
STRUCTURES	
Forward Fuselage	The right upper observation window was replaced by a ram air ventilation scoop. The aft viewing and left overhead windows were replaced by aluminum plates. A boilerplate forward reaction control subsystem module was installed - ballast support provisions were included. An air data mast was installed. A fiberglass nose cap was installed in place of a carbon-carbon nose cap.
Aft Fuselage	A boilerplate base heat shield was installed. Boilerplate T-0 umbilical panels/closeout doors and external tank umbilical door were installed. Simulated orbital maneuvering subsystem/aft reaction control subsystem pods were installed.
Wings	Fiberglass leading edge structure was substituted for carbon-carbon except for two panels on the right wing. Aerosurface interface seals do not have thermal protection provisions.
Vertical Tail	Aerosurface interface seals do not have thermal protection provisions.
Tail Cone	A tail cone was installed for captive-inert and captive-active flights. The tail cone will also be used for initial free flights and for ferry flights following the Approach and Landing Test Program.
Body Flap	A special aerodynamic seal was used which does not have thermal protection provisions.
THERMAL PROTECTION	
	Simulated reusable surface insulation (polyurethane foam) was generally substituted for the operational thermal protection subsystem. Materials to be used for orbital flight were installed in selected areas for installation experience and evaluation. Fused silica was installed on areas of the vertical tail and aft body to protect against local heating from the auxiliary power unit exhaust plumes.

TABLE A-I.- ORBITER 101 UNIQUE FEATURES
FOR THE APPROACH AND LANDING TEST PROGRAM - Continued

Subsystem/Component	Description
PASSIVE THERMAL CONTROL	
	Fibrous bulk insulation and multilayer insulation were installed only where functionally required with the exception of the forward fuselage where the installation was complete to minimize later changes.
PURGE, VENT AND DRAIN	
	The purge, vent and drain subsystem was specially configured for Approach and Landing Test requirements.
MECHANICAL	
	An Orbiter/carrier aircraft separation subsystem was installed instead of the Orbiter/external tank separation subsystem. Rigid arms were installed in place of thrust vector control actuators. Manually actuated mechanisms were installed for latching the payload bay doors. Air data probes were fixed in the deployed position. The following were not installed: Payload retention and deployment subsystem Payload bay access hatch Docking module and hatches Airlock hatch Space radiator hinges, and radiator latch and drive mechanism Star tracker and active vent door operating mechanisms T-0 umbilical panels/closeout doors External tank closeout door
REMOTE MANIPULATOR	
	The subsystem was not installed.

TABLE A-I.- ORBITER 101 UNIQUE FEATURES
FOR THE APPROACH AND LANDING TEST PROGRAM - Continued

Subsystem/Component	Description
HYDRAULICS	
	The electric motor-driven on-orbit circulation pumps were replaced by pump simulators. A wick-type water boiler was used instead of a spray-type water boiler. Backup hydraulic fluid reservoirs were installed. Main engine gimbal/control and warmant flow units were not installed.
PYROTECHNICS	
	Pyrotechnic devices were provided for: Orbiter/carrier aircraft separation Pyrotechnic devices were not provided for: Remote manipulator system emergency jettison Rendezvous radar antenna emergency jettison Ku-band antenna jettison Docking tunnel jettison Space radiator emergency jettison Orbital/external tank separation and umbilical disconnect
POWER	
Auxiliary Power Units	The fuel quantity gaging system is unique for the Approach and Landing Test Program.
Electrical Power Generation	Fuel cell power plant performance characteristics are unique. The operational cryogenic reactant storage system was replaced by a high pressure gas storage system for the Approach and Landing Test Program. Special tanks were provided for storage of fuel-cell-generated water.
PROPULSION	
Main Engines	The main engines were not installed. Dummy main engines simulating the mass and envelope of the actual engines were installed.

TABLE A-I.- ORBITER 101 UNIQUE FEATURES
FOR THE APPROACH AND LANDING TEST PROGRAM - Continued

Subsystem/Component	Description
	PROPULSION (Concluded)
Orbital Maneuvering and Reaction Control	The orbital maneuvering subsystem, forward reaction control subsystem and aft reaction control subsystem were not installed.
	AVIONICS
Guidance, Navigation and Control	The rate gyro assembly contains three rate gyros instead of four. The navigation base was built to support inertial measurements units only. There is no star tracker boom. The inertial measurement unit installation is unique for the Approach and Landing Test Program. There are three accelerometer assemblies instead of four. A nose boom probe assembly and a dedicated air data computer were provided for calibration of the operational system. A backup flight control subsystem was provided. The subsystem is functionally independent, single-string, and pilot-commanded. It uses both dedicated hardware and hardware shared with the primary flight control system. General purpose computer no. 5 is dedicated to backup flight control subsystem use. The following were not installed: Star trackers Crew optical alignment sight Mission specialist station rotation hand controller Translation hand controller Ascent thrust vector control drivers and actuators Orbital maneuvering subsystem drivers and thrust vector control actuators Reaction jet drivers Aft reaction control subsystem valves Forward reaction control subsystem valves

TABLE A-I.- ORBITER 101 UNIQUE FEATURES
FOR THE APPROACH AND LANDING TEST PROGRAM - Continued

Subsystem/Component	Description
AVIONICS (Continued)	
Communications and Tracking	The communications and tracking subsystem installation was unique for the Approach and Landing Test Program. A C-band transponder was provided for precision tracking. The following capabilities were not provided for the Approach and Landing Test flights. Uplink commands Orbital navigation Rendezvous radar Television
Displays and Controls	The configuration of the following is unique for the Approach and Landing Test Program. Forward flight control station panel Overhead panels Angle of attack/Mach indicator Altitude/vertical velocity indicator Annunciators Event indicator Toggle switches Thumbwheel switches Variable transformer Interior lights Caution and warning system The following displays and controls were not installed. Aft flight deck panels Mid deck panels Airlock panels Range/range rate indicator Propellant quantity indicator Timers Three-phase circuit breakers Translation controller Exterior lights

TABLE A-I.- ORBITER 101 UNIQUE FEATURES
FOR THE APPROACH AND LANDING TEST PROGRAM - Continued

Subsystem/Component	Description
AVIONICS (Concluded)	
Instrumentation	The operational instrumentation and development flight instrumentation were integrated for the Approach and Landing Test Program, whereas the two subsystems will be separate for Orbital Flight Tests. Additional differences for Orbital Flight Tests are as follows. Operational Instrumentation: A payload data interleaver is to be added. New types of sensors will be used. Functional usage of pulse code modulation (PCM) and master timing units will be increased. Subsystem interfaces will be increased. Capability will be provided for inflight playback of recorders. The number of measurements will be increased. Development flight instrumentation: The Orbital Flight Test configuration will contain a separate PCM master unit and PCM recorder, an additional wideband recorder for ascent data, and additional measurements.
Data Processing	The engine interface unit was not installed.
Electrical Power Distribution and Control	The DC and AC distribution systems were unique. Changes for Orbital Flight Test will include additional utility outlets, added payload power provisions, and additional distribution and control assemblies. Inverter on-off controls have been redesigned for Orbital Flight Test use. Events control equipment configurations unique for the Approach and Landing Test Program includes the master events controller, component drivers, and relays. The range safety system was not installed.
Flight Software	The flight software was designed to meet the specific requirements of the Approach and Landing Test Program.

TABLE A-I.- ORBITER 101 UNIQUE FEATURES
FOR THE APPROACH AND LANDING TEST PROGRAM - Continued

Subsystem/Component	Description
ENVIRONMENTAL CONTROL AND LIFE SUPPORT	
Atmospheric Revitalization	The atmospheric revitalization subsystem design is unique for the Approach and Landing Test Program. A ram air vent system was installed for emergency smoke removal. Numerous items necessary for orbital flight were not installed, including: Two-gas (oxygen and nitrogen) system for cabin gas makeup. Lithium hydroxide cartridges for the carbon dioxide absorber assembly. Water chiller. Liquid cooled garment heat exchanger and accumulator. Pressure control valves and regulators.
Life Support	The water management subsystem was not included except for two Apollo-type waste water tanks to store water generated by the fuel cells and an Apollo-type glycol reservoir to collect water condensed in the cabin heat exchanger. The waste management subsystem was not installed.
Active Thermal	Elements of the subsystem which are unique for the Approach and Landing Test Program include the ammonia boiler and ammonia storage facilities. The following items were not installed: Redundant freon pump (only 1 in each coolant loop) Payload heat exchanger Hydraulics heat exchanger Proportioning valve Baseline ammonia storage tanks Flash evaporator system Space radiator panels
Airlock Support	The subsystem was not installed.

TABLE A-I.- ORBITER 101 UNIQUE FEATURES
FOR THE APPROACH AND LANDING TEST PROGRAM - Concluded

Subsystem/Component	Description
CREW EQUIPMENT	
	The following items are unique for the Approach and Landing Test flights. Hand-held radios Crew intercom recorders Carry-on oxygen system Protective breathing systems Camera systems Descent devices for emergency egress Biomedical monitoring system Urine and water bottles Equipment not provided for the Approach and Landing Test includes: Life Support Assemblies: Personal oxygen system Personal rescue enclosure Extravehicular mobility unit Manned maneuvering unit Trace gas analyzer Anti-G suit Bioinstrumentation system Cameras, film and accessories (35-mm hand copy photography) Radiation monitors Food management system Shuttle Orbiter medical system

APPENDIX B

METEOROLOGICAL DATA

TABLE B-I.- METEOROLOGICAL DATA

Parameter	CA-1A		CA-1		CA-3	
	Takeoff	Landing	Takeoff	Landing	Takeoff	Landing
Visibility, statute miles	45	45	25	45	50	60
Ceiling, feet	25 000, scattered	25 000, scattered	25 000, broken	25 000, broken	Clear	Clear
Barometric pressure, inches	29.96	29.96	30.02	30.02	30.07	30.07
Surface temperature, °F	68	75	78	81	70	75
Dew point, °F	41	43	--	--	34	35
Wind direction, deg	220	210	210	180	170	200
Wind speed, knots	8	8	6	4	3	4
Turbulence	None	None	Light	None	None	None

APPENDIX C

MASS PROPERTIES

TABLE C-IV.- ORBITER 101 CONSUMABLES

System/Consumables	Captive-active flight 1A		Captive-active flight 1		Captive-active flight 3	
	Quantity loaded, lb	Quantity at landing, lb	Quantity loaded, lb	Quantity at landing, lb	Quantity loaded, lb	Quantity at landing, lb
Fuel cells						
Oxygen	125	96	130	105	130	105
Hydrogen	11	7	11	8	11	8
Hydraulic subsystem						
Water	483	440	483	423	483	423
Active thermal control						
Ammonia	834	374	830	450	770	450
Auxiliary power units						
Hydrazine	873	328	873	375	873	454
Pressurant gas	4	4	4	4	4	4
By-product water	2	2	2	2	2	2
Waste water	23	54	23	54	23	54

TABLE C-V.- ORBITER 101 BALLAST

Location[a]	Weight, lb		
	CA-1A	CA-1	CA-3
Nose wheel well	1 159	1 159	1 159
Forward reaction control subsystem module	2 682	2 682	2 682
Payload bay ballast pallet, forward (X_o = 951)	7 060	7 060	7 060
Payload bay ballast pallet, aft (X_o = 1187)	3 354	3 354	3 354
Payload bay, development flight instrumentation pallet	395	395	395
Total ballast	14 650	14 650	14 650

[a]All captive-active flights.

NASA-JSC