General Disclaimer

One or more of the Following Statements may affect this Document

- This document has been reproduced from the best copy furnished by the organizational source. It is being released in the interest of making available as much information as possible.

- This document may contain data, which exceeds the sheet parameters. It was furnished in this condition by the organizational source and is the best copy available.

- This document may contain tone-on-tone or color graphs, charts and/or pictures, which have been reproduced in black and white.

- This document is paginated as submitted by the original source.

- Portions of this document are not fully legible due to the historical nature of some of the material. However, it is the best reproduction available from the original submission.

Produced by the NASA Center for Aerospace Information (CASI)

JPL PUBLICATION 77-53, VOLUME IV

(NASA-CR-155555) STATE CRIMINAL JUSTICE TELECOMMUNICATIONS (STACOM). VOLUME 4: NETWORK DESIGN SOFTWARE USER'S GUIDE Final Report (Jet Propulsion Lab.) 148 p HC A07/MF A01 CSCL 17B G3/32

N78-16221

Unclas 57807

State Criminal Justice Telecommunications (STACOM) Final Report

Volume IV: Network Design Software User's Guide

Prepared for

Law Enforcement Assistance Administration,
Department of Justice

by

Jet Propulsion Laboratory
California Institute of Technology
Pasadena, California

JAN 1978
RECEIVED
NASA STI FACILITY

JPL PUBLICATION 77-53, VOLUME IV

State Criminal Justice Telecommunications (STACOM) Final Report

Volume IV: Network Design Software User's Guide

Jun-Ji Lee

October 31, 1977

Prepared for

Law Enforcement Assistance Administration, Department of Justice

by

Jet Propulsion Laboratory
California Institute of Technology
Pasadena, California

Prepared by the Jet Propulsion Laboratory, California Institute of Technology, for the Law Enforcement Assistance Administration, Department of Justice, by agreement with the National Aeronautics and Space Administration.

FOREWORD

The State Criminal Justice Telecommunications (STACOM) Project consists of two major study tasks. The first entails a study of criminal justice telecommunication system user requirements and system traffic requirements through the year 1985. The second investigates the least cost network alternatives to meet these specified traffic requirements.

Major documentation of the STACOM Project is organized in four volumes as follows:

State Criminal Justice Telecommunications (STACOM) Final Report - Volume I: Executive Summary	77-53 Vol. I
State Criminal Justice Telecommunications (STACOM) Final Report - Volume II: Requirements Analysis and Design of Ohio Criminal Justice Telecommunications Network	77-53 Vol. II
State Criminal Justice Telecommunications (STACOM) Final Report - Volume III: Requirements Analysis and Design of Texas Criminal Justice Telecommunications Network	77-53 Vol. III
State Criminal Justice Telecommunications (STACOM) Final Report - Volume IV: Network Design Software Users' Guide	77-53 Vol. IV

The above material is also organized in an additional four volumes which provide a slightly different reader orientation as follows:

Title	Document No.
State Criminal Justice Telecommunications (STACOM) Functional Requirements - State of Ohio	5030-43*
State Criminal Justice Telecommunications (STACOM) Functional Requirements - State of Texas	5030-61*
State Criminal Justice Telecommunications (STACOM) User Requirements Analysis	5030-80*
State Criminal Justice Telecommunications (STACOM) Network Design and Performance Analysis Techniques	5030-99*

*Jet Propulsion Laboratory internal document.

This document, No. 77-53, Volume IV, entitled, "Network Design Software Users' Guide," describes techniques that are implemented in the STACOM program. It then illustrates the application of this program by providing a run example with detailed input/output listing.

It presents the results of one phase of research carried out jointly by the Jet Propulsion Laboratory, California Institute of Technology, and the States of Texas and Ohio. The project is sponsored by the Law Enforcement Assistance Administration, Department of Justice, through the National Aeronautics and Space Administration (Contract NAS7-100).

ABSTRACT

A users' guide is provided in this volume for the network design software developed during the State Criminal Justice Telecommunications (STACOM) project sponsored by the Law Enforcement Assistance Administration (LEAA).

The network design program is written in FORTRAN V and implemented on a UNIVAC 1108 computer under the EXEC-8 operating system which enables the user to construct least-cost network topologies for criminal justice digital telecommunications networks. A complete description of program features, inputs, processing logic, and outputs is presented. Also included is a sample run and a program listing.

CONTENTS

1	INTRODUCTION	1-1
1.1	PURPOSE AND SCOPE	1-1
1.2	SUMMARY	1-1
1.2.1	The STACOM Program	1-1
1.2.2	State Criminal Justice Communication Network and its Optimization	1-2
1.2.3	Functions Performed by the STACOM Program	1-2
1.2.4	Operational Procedure	1-4
1.2.5	Aborting and Recovering a Run	1-5
2	THE STACOM PROGRAM	2-1
2.1	INTRODUCTION	2-1
2.1.1	State Criminal Justice Information System	2-1
2.1.2	State Digital Communication Network	2-1
2.1.3	A STACOM Communication Network	2-2
2.1.4	Communication Network Configurations	2-3
2.1.5	Network Optimization	2-3
2.1.6	The STACOM Program and its Purposes	2-4
2.1.7	Functions Performed by the STACOM Program	2-4
2.2	MAIN FEATURES	2-5
2.2.1	Structure	2-7
2.2.2	Response Time Algorithm	2-12
2.2.3	Flexibility	2-13
2.2.4	Programming Language	2-14
2.2.5	Operating System Requirements	2-14
2.2.6	Functional Limitations	2-15
2.3	INPUT	2-15

PRECEDING PAGE BLANK NOT FILMED

2.3.1 Data Requirements ---------- 2-15

2.4 PROCESSING LOGIC ---------- 2-18

2.4.1 Traffic Calculation ---------- 2-18

2.4.2 Distance Calculation ---------- 2-19

2.4.3 Formation of Regions ---------- 2-21

2.4.4 Selection of Regional Switchers ---------- 2-24

2.4.5 Formation of Regional Star Networks ---------- 2-27

2.4.6 Optimization of Regional Networks ---------- 2-29

2.4.7 Formation of an Interregional Network ---------- 2-37

2.4.8 Optimization of an Interregional Network ---------- 2-37

2.5 OUTPUT ---------- 2-41

2.5.1 Printer ---------- 2-41

2.5.2 CalComp Plot ---------- 2-43

2.6 SYSTEM CONFIGURATION ---------- 2-44

2.6.1 Hardware ---------- 2-44

3 PROGRAM OPERATIONS ---------- 3-1

3.1 INTRODUCTION ---------- 3-1

3.2 ENVIRONMENT ---------- 3-1

3.2.1 Hardware ---------- 3-1

3.2.2 Software ---------- 3-2

3.2.3 Functional Limitations ---------- 3-2

3.3 RUN DESCRIPTION ---------- 3-3

3.3.1 Initialization and Setup ---------- 3-3

3.3.2 Run Options ---------- 3-4

3.3.3 Control Instruction and Sequences ---------- 3-9

3.3.4 Program Listing ---------- 3-11

3.4 SAMPLE RUN ---------- 3-11

3.4.1 Run Stream ---------- 3-11

3.4.2 Input ---------- 3-12

3.4.3 Output ---------- 3-24

REFERENCES ---------- 4-1

APPENDIXES

A STACOM PROGRAM LISTING ---------- A-1

B GLOSSARY ---------- B-1

Figures

2-1 Example of a Digital Communication Network ---------- 2-2

2-2 Basic Communication Network Configurations ---------- 2-3

2-3 Example of Initial Regional Networks and an Initial Interregional Network ---------- 2-6

2-4 Example of Optimized Regional Networks and an Optimized Interregional Network ---------- 2-7

2-5 A Tree with A as its Root ---------- 2-8

2-6 Internal Representation of the Tree in Figure 2-5 ----- 2-9

2-7 STACOM Program Structure ---------- 2-10

2-8 Flow Chart for Formation of Regions ---------- 2-22

2-9 Example of Region Network Formation and Regional Switcher Selection ---------- 2-25

2-10 Flow Chart for RSC Selection ---------- 2-26

2-11 Flow Chart for Regional Star Network Formation -------- 2-28

2-12 Typical Star Network ---------- 2-30

2-13 Typical Multidrop Network of Optimization ---------- 2-30

2-14 Flow Chart for Subroutine ESSWIL ---------- 2-32

2-15 Relationship among K, L, KI, and M Parameters --------- 2-33

2-16 Flow Chart for Subroutine TRYLNK ---------- 2-35

2-17 Flow Chart for Subroutine RSPNSE ---------- 2-36

2-18 Flow Chart for Intraregional Line Selection ---------- 2-38

2-19 Basic Topology of Line Elimination ---------- 2-39

2-20 Flow Chart for Interregional Network Optimization ----- 2-40

3-1 CalComp Plot from the Example Run ---------- 3-34

Tables

2-1 Examples of Line Configurations obtained by Subroutine LINNUM ---------- 2-29

3-1 Formats for Input Data ---------- 3-5

3-2 Input Data for the Example Run ---------- 3-13

3-3 Printer Output from the Example Run ---------- 3-25

3-4 Unit 6 Printer Output from the Example Run ---------- 3-33

SECTION 1

INTRODUCTION

1.1 PURPOSE AND SCOPE

The STACOM (STAte Criminal Justice COMmunication) network topology program is a software tool which has been developed and utilized during the STACOM project. This Software Users' Guide provides:

(1) A detailed description of the program, i.e., what it does and how it does it.

(2) Details of the STACOM storage structure and of its program structure so that a user can easily comprehend its capabilities and limitations.

(3) Details of the options available, a functional block diagram, and a program listing with comment statements so that a user can expand/improve the program capabilities by either changing parameter values or modifying the program itself.

(4) Details of a sample run stream used as a reference run for correct operation, and an input/output example, so that a user can easily operate the program as a tool for network design.

The STACOM program was developed and implemented with the FORTRAN-V programming language, which is one of several high-level languages available in the UNIVAC 1108 computer systems at the Jet Propulsion Laboratory. EXEC-8 is the operating system used in these systems. With this in mind, usage of this program in a similar UNIVAC system may require some degree of conversion effort. For a facility with computers other than the UNIVAC type, a considerable effort would be required in converting this program into one compatible with the operating system of that facility.

The balance of this document consists essentially of two parts. The first deals with the functional design portion of the STACOM topology program (Section 2); the other is concerned with the operational aspect (Section 3).

1.2 SUMMARY

1.2.1 The STACOM Program

The development of the STACOM (STAte Criminal Justice COMmunication) network topology program was performed to support the primary STACOM objective of providing the tools needed for designing and evaluating intrastate communication networks. The STACOM project goals are to:

(1) Develop and document techniques for intrastate traffic measurement, analysis of measured data, and prediction of traffic growth.

(2) Develop and document techniques for intrastate network design, performance analysis, modeling, and simulation.

(3) Illustrate applications of network design and analysis techniques to typical existing network configurations and new or improved configurations.

(4) Develop and illustrate a methodology for establishing priorities for cost-effective expenditures to improve capabilities in deficient areas.

A task involving the development of a software package for the synthesis and analysis of alternate network topologies was undertaken.

In the following subsections, we describe a typical law enforcement communication network, what the STACOM program does, how it does it, and a general operating procedure for using the program.

1.2.2 State Criminal Justice Communication Network and its Optimization

A State law enforcement communication network is defined as a network which contains a set of system terminations connected by a set of links. Each system termination consists of one or more physical terminals or computers located at the same city, called a terminal city. The main purpose of the communication network is to provide to the terminal users rapid access to and response from the data base system, and rapid response time for intra-agency communication.

Various ways of connecting a given set of terminals may be used, depending on different requirements. Because the operating costs for a given communication network depend very much on its layout, some cost reduction is possible through an initial investment in a configuration analysis.

The activity of designing a network with the lowest costs which satisfy loading requirements, called network optimization, uses various existing techniques which provide means for such purposes.

1.2.3 Functions Performed by the STACOM Program

The STACOM program is a software tool which has been developed to design optimal networks that will achieve lower operating costs. It utilizes a modified Esau-Williams technique to search for those direct links between system terminations and a regional switching center (RSC) which may be eliminated in order to reduce operating costs without impairing system performance. The RSC provides either a switching capability, a data base center, or both.

Inputs for the STACOM program contain data such as traffic, terminal locations, and functional requirements. The network may be divided into any number of desired regions in any given program run. Each region has a Regional Switching Center (RSC) which serves terminals in its region. RSCs are, finally, interconnected to form the complete network. Upon receipt of a complete set of input data, the STACOM program first performs the formation of regions and, if needed, the selection of RSCs. The program then builds a regional network in which only system terminations in the region are connected. The program subsequently optimizes the regional network for each region requested by the user.

The formation of regions is performed by the program on the basis of attempting to arrive at near-equal amounts of traffic for all regions. After finding the farthest unassigned system termination from the system centroid (a geographical center), the program starts formation of the first region by selecting unassigned system terminations close to this system termination until the total amount of traffic for that region is greater than a certain percentage (90% in this implementation) of the average regional traffic. The average regional traffic is simply the total network traffic divided by the number of desired regions. The same process is repeated by the program in forming the rest of the regions.

The selection of an RSC is based on the minimal traffic-distance product sum. In the selection process, each system termination is chosen as a trial RSC, and the sum of traffic-distance products is then calculated. The location of the system termination which provides the minimal sum is then selected as the RSC, although the location of the RSC for a given region may also be specified by the user. The optimization process consists of two basic steps, i.e., searching for lines whose elimination yields the best cost saving, and updating the network. The two steps are repeated until no further saving is possible.

Before performing network optimization, the STACOM program constructs an initial star network in which each system termination is directly connected to the regional center. It then starts the optimization process. At the termination of this process, a multidrop network is generally developed. In a multidrop network, some lines have more than one system termination; these are called multidrop lines.

When needed, the STACOM program will continue to form an optimized interregional network, which consists of inter-connections between regional centers.

The process for interregional network optimization involves the same two steps: searching and updating. However, the searching step is primarily to find the alternate route, for diverting traffic between two regional switching centers, that provides the best saving.

Based on the data provided, a successful run of the STACOM program generates a regular printer output and, if requested, a CalComp plot. The printer output contains data such as initial regional network and optimized network costs, assignments of system terminations, etc. The CalComp plot shows the geographical connections of the optimized network detailing multidrop line connections to all of the system terminations.

1.2.4 Operational Procedure

1.2.4.1 Initialization and Setup. When the STACOM program is executed from an 80-character/line demand terminal, an alternate file, 100, to be used as a printer output file, must be defined. Otherwise, all printout data will be directed to the terminal which will produce interleaving output. The file is defined by the statement @ASG,UP 100.

In addition to the redirection of output file destination, the user must direct the punch card file to a proper unit for a CalComp plotter. As an example, the statement @SYM,P PUNCH$,,G9PLTF will direct the punch card images to a CalComp plotter designated with G9PLTF.

1.2.4.2 Starting a Run.

1.2.4.2.1 Batch Mode. Following is a list of control statements required when running the STACOM program as a batch run:

```
@RUN run-ID, account-no., project-ID, SUP-time, pages/cards
@ASG,UP 100
@SYM,P PUNCH$,,plotter-ID
@XQT file.STACOM
      (INPUT DATA)
@BRKPT 100
@FREE 100
@SYM 100,,printer-ID
@FIN
```

The RUN card gives the following information: designated run ID, user's account number, project-ID, expected SUP-time usage (sum of CPU time, I/O time, and control/execute request time), limited number of printer pages, and number of cards which may be generated from the run. Plotter-ID gives the logical ID of the CalComp pen plotter and file is the file which contains the absolute element of the STACOM program. Printer-ID gives the logical ID of the line printer. INPUT DATA as shown is the input data required. When all of these data items are in order and ready, the deck can be submitted to the operator for processing.

1.2.4.2.2 Demand Mode. If program execution is to be performed via a demand terminal, the user can converse interactively with the program. The user may also run the program as a batch job by havin all input data prepared and added after the @XQT statement.

Under the conversational mode, the user acts as a respondent who answers the requests for data made by the program. This mode of operation provides the user with an understanding of how the program is progressing. A user can very often terminate a run before a complete set of input data is given if he has some knowledge of the progress being made. This capability can prevent the user from an unnecessary waste of time. For example, if a run encounters a system which has more oversized distance data than allowed, a message from the program will be printed out

on the terminal. This will force the user to modify the program in order to handle the large number of oversized distance data.

1.2.4.3 Normal Termination. When a STACOM program run proceeds successfully and terminates normally, the normal file unit 6 will contain messages for each successful regional network optimization. After a normal termination, the user can direct the output file 100 to a printer device, and the CalComp plot will be generated by the designated CalComp pen plotter.

1.2.5 Aborting and Recovering a Run

When a run encounters trouble resulting from incorrect input data, the user can use the normal aborting procedure to terminate its execution if it is a demand job. A statement of @@X after interrupting the line communication by pressing the BREAK key, will terminate a program execution at any time. On the other hand, the EXEC-8 may abort a run when certain serious violations occur during its execution.

If a program run has been interrupted because of a system outage, no recovery of the run is possible.

SECTION 2

THE STACOM PROGRAM

2.1 INTRODUCTION

Two types of analysis are involved in designing a communication network. The first is concerned with arriving at acceptable line loadings; the second involves the achievement of optimal line configurations. The STACOM program was developed to accomplish both of these types of analysis.

Before describing the STACOM program itself, a State criminal justice information system with its communication network is examined as a typical existing communication network. The goal of the STACOM program is then discussed.

2.1.1 State Criminal Justice Information System

An information system is usually developed to provide a systematic exchange of information between a group of organizations. The information system is used to accept (as inputs), store (in files or a data base), and display (as outputs) strings of symbols that are grouped in various ways. While an information system may exist without a digital computer, we will consider only systems which contain digital computers as integral parts.

Information systems can be classified in various ways for various purposes. If classification is by the type of service rendered, the type of information system which serves a criminal justice community within a State can be considered as an information storage and retrieval system. This type of information system is the subject of our interest. For example, the State of Ohio has an information system with a data base located at Columbus. The data base contains records on wanted persons, stolen vehicles, and stolen license plates. Also included in the same computer are files of the Bureau of Motor Vehicles (BMV) which contain records on all licensed drivers and motor vehicles in that State.

2.1.2 State Digital Communication Network

For a given State information system, the storage and retrieval of data to/from the data base can be accomplished in various ways for different user requirements. In general, the users of a State criminal justice information system are geographically distant from the central data base computer. Because a fast turn-around time is a necessity for this particular user community, direct in-line access to the central data base by each criminal justice agency constitutes the most important of the user's requirements. In addition, it is required to move message data quickly from one agency to another at a different location. These goals require the establishment of a data communication network. Because the computer deals only with digital data, only digital data communication networks are considered here.

A digital communication network consists mainly of a set of nodes connected by a set of links. The nodes may be computers, terminals, or other types of communication control units that are placed in various locations, and the links are the communication channels providing data paths between the nodes. These channels are usually private or switched lines that are leased from a common carrier. A simple example of a network is given in Figure 2-1, where the links between modems are communication lines leased from a common carrier. The communication control unit in city E is used to multiplex or concentrate several low-speed terminals onto a high-speed line. The line which connects cities C, D, and others is called a multidrop line, and this line connects several terminals to the data base computer.

2.1.3 A STACOM Communication Network

For the purposes of the STACOM study, a communication network was defined as a set of system terminations connected by a set of links. Each system termination consists of one or more physical terminals or computers located at the same city.

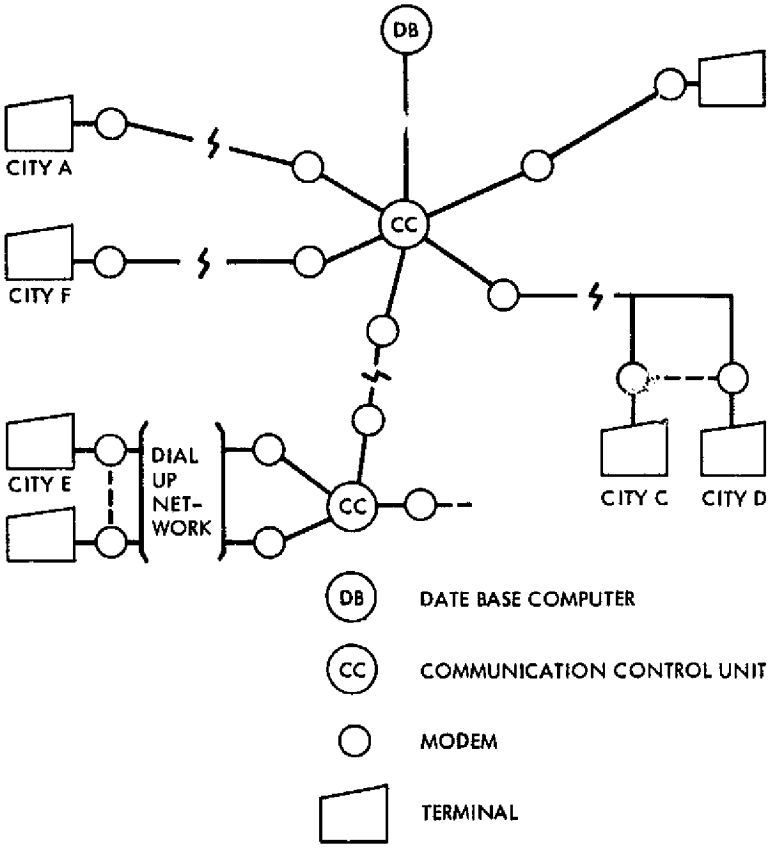

Figure 2-1. Example of a Digital Communication Network

2.1.4 Communication Network Configurations

The communication network for an information system with a central data base computer is one of three basic network configurations: the star, the multidrop, or distributed connection. These three types are shown in Figure 2-2.

As shown in Figure 2-2, the star network consists of four direct connections, one for each system termination. Each connection is called a central link. The multidrop network has one line with two system terminations and two central links. In the distributed network shown, more than one path exists between each individual system termination and the central data base.

2.1.5 Network Optimization

Given a communication network, the operating costs for the various types of lines or common carrier facilities required are governed by tariffs based upon location, circuit length, and type of line. Experience suggests that the operating cost of a network can often be substantially reduced by an initial investment in a configuration analysis. In other words, some efforts in network optimization generally provide cost-saving.

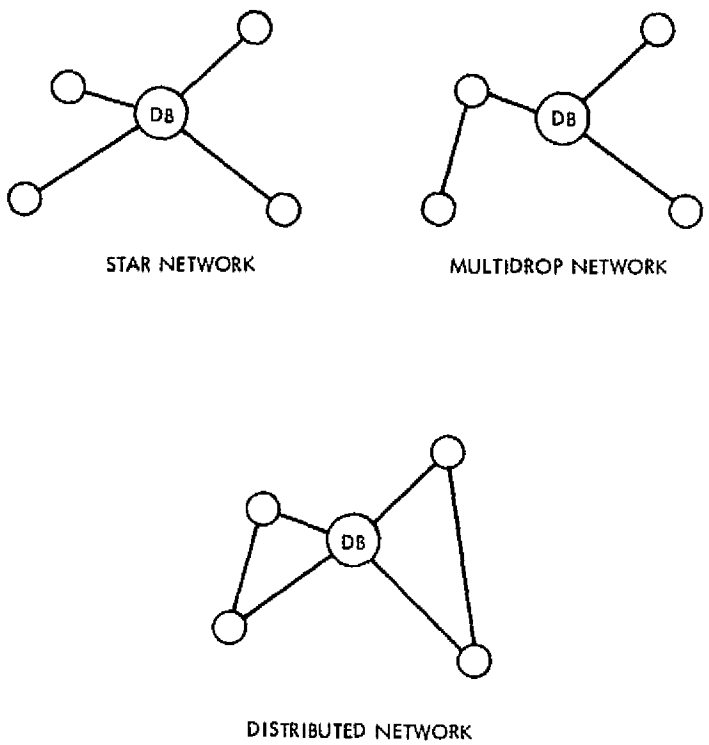

Figure 2-2. Basic Communication Network Configurations

There are two ways of constructing a communication network in a geometrical sense. One can divide a communication system into several regions, construct an optimal regional communication network for each region, and then build an inter-regional network connecting all of the regional centers to the central data base center. Each regional center is responsible for switching messages issued from and returned to each system termination in the region. Alternatively, one can consider the whole system as a region which is entirely made up of system terminations, and perform the optimization for that region.

2.1.6 The STACOM Program and its Purposes

One of the objectives in the STACOM study is to design optimal and effective communication networks which will satisfy predicted future traffic loads for both selected model states, Ohio and Texas. In order to achieve this objective, the STACOM program was developed and utilized for the analysis and synthesis of alternative network topologies. It is also the project's goal that the final product be a portable software package which can be used as a network design tool by any user.

In network design, two major problems are the selection of a cost-effective line configuration for given traffic, and the design of an optimal network to arrive at lower operating costs.

The goal of the STACOM program is to provide a user with a systematic method for solving both problems. In other words, the main purpose of the STACOM program is to provide the network designer with a tool which he can use for line selection and for obtaining optimal line connections.

2.1.7 Functions Performed by the STACOM Program

The STACOM program can be used to generate an optimal network configuration for a communication system if traffic to/from each system termination is provided. In addition to performing the normal input/output functions, the program will:

(1) Define regions, based on equal traffic distribution.

(2) Select regional centers, based on minimal traffic-distance product sum.

(3) Form a regional star network with the selected regional center as the regional switching center (RSC).

(4) Perform regional network optimization.

(5) Form an optimized inter-regional network if required.

In performing initial network formation and subsequent optimization, line selection is done by the STACOM program to satisfy the following conditions:

(1) The line utilization factor does not exceed a specific number

(2) The average terminal-response time is less than a preselected unit of time

(3) The number of terminals on a multidrop line is less than a preselected number.

In the process of regional network optimization, the STACOM program utilizes a modified Esau-Williams method (Reference 1). Starting with a star network, in which each system termination has a central link to the regional center, the optimization process searches for a central link, the elimination of which will provide the best savings in cost; the program then provides an alternate route for the traffic that would have been carried by the link eliminated. The process is repeated until no further cost saving is possible. The result of this process is a multidrop network.

When a communication system has more than two regions, the STACOM program can also be used to generate an optimal inter-regional network. It first constructs an initial inter-regional network in which every Regional Switching Center (RSC) has a direct link to every other RSC, it then performs line elimination by diverting traffic through other routes.

Figure 2-3 gives examples of regional star networks and an initial inter-regional network; Figure 2-4 gives examples of optimized regional networks and inter-regional network obtained from Figure 2-3.

2.2 MAIN FEATURES

As described in Paragraph 2.1, the STACOM program has been developed for the purpose of performing analysis and synthesis of alternative network topologies. The following is a list of features which characterize the STACOM program:

(1) The Esau-Williams routine has been modified, tested and utilized for determining near optimal network topology.

(2) A tree type structure is used as the storage structure in the program.

(3) The program execution has been made flexible; for example, constraint on response time for a multidrop line is now an input parameter.

(4) A response-time algorithm has been implemented in the program.

(5) A CalComp plotting routine has been included for drawing resulting multidropped networks.

In the rest of this subsection, these main features are discussed in detail.

2.2.1 Structure

2.2.1.1 Storage. Since a multidrop network can be viewed as a tree composed of sub-trees, it was determined that a tree-type data structure would be appropriate and convenient for representing a multidrop network.

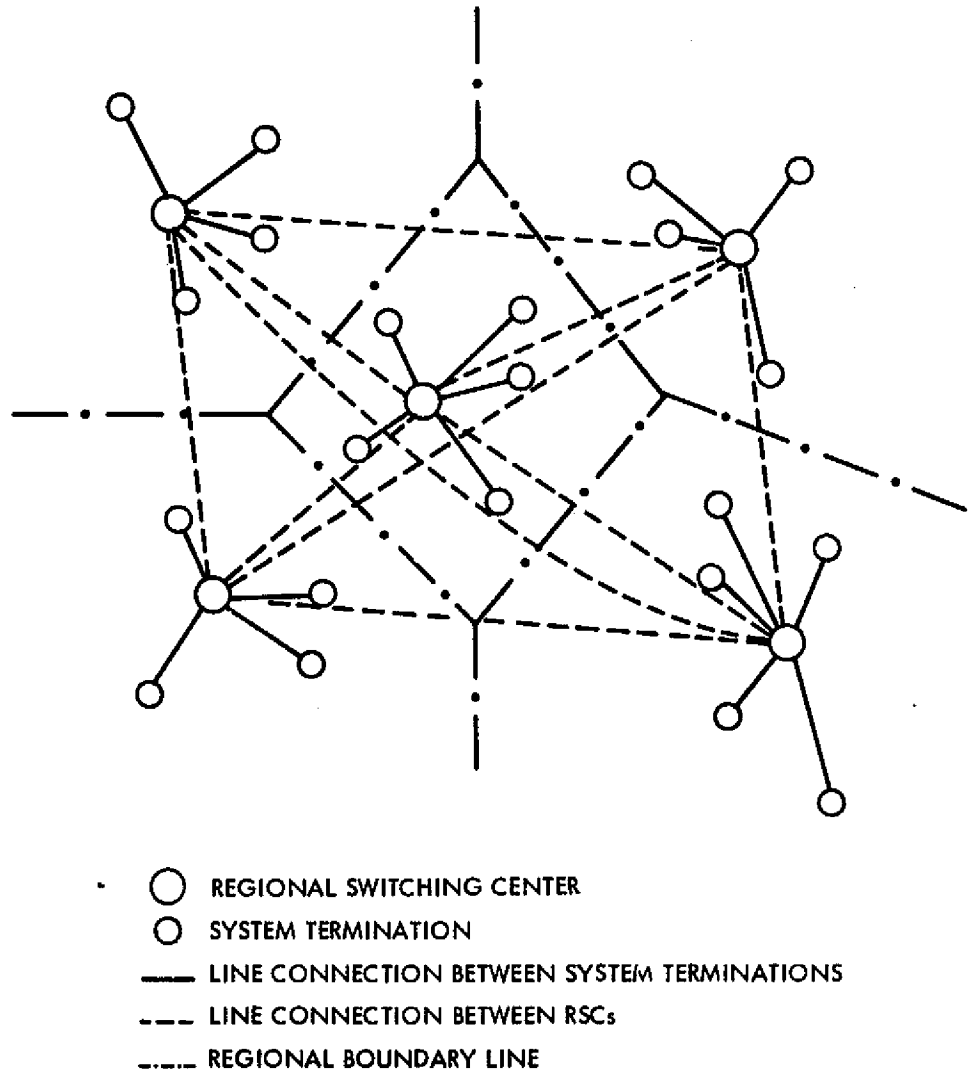

Figure 2-3. Example of Initial Regional Networks and an Initial Interregional Network

A tree-type storage structure is therefore needed in the program. This tree-type storage structure is implemented by defining a set of storage cells.

Each system termination (data) is represented internally by a storge cell in the program. Each cell consists of five fields and each field occupies one word (i.e., a 36-bit word for UNIVAC 1108 computers).

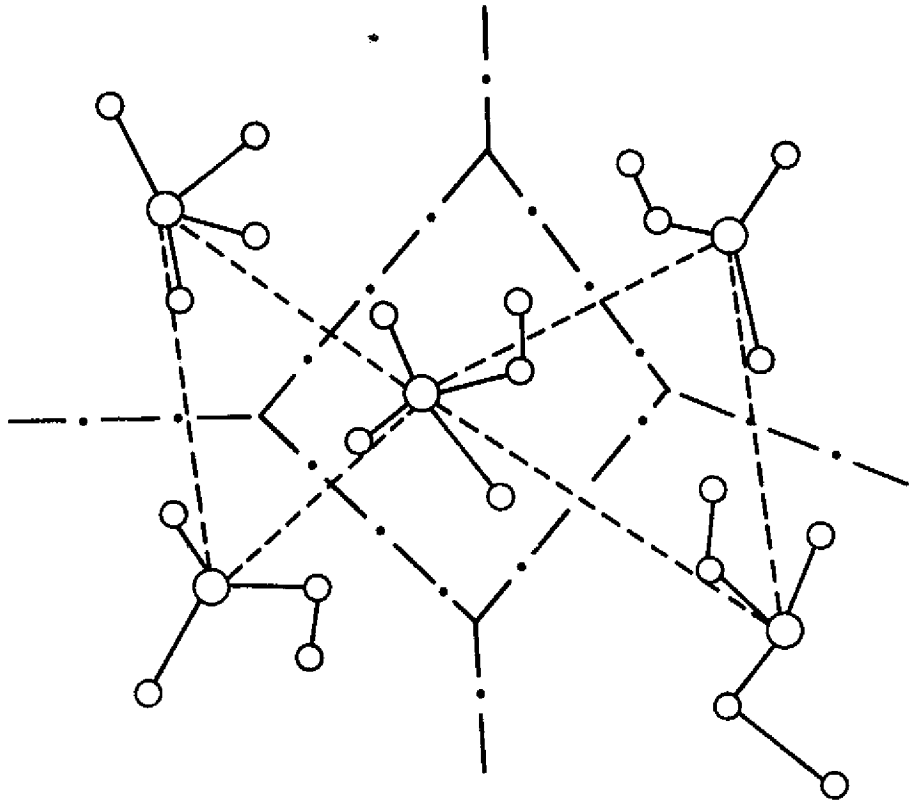

REGIONAL SWITCHING CENTER
SYSTEM TERMINATION
LINE CONNECTION BETWEEN SYSTEM TERMINATIONS
LINE CONNECTION BETWEEN RSCs
REGIONAL BOUNDARY LINE

Figure 2-4. Example of Optimized Regional Networks and an Optimized Interregional Network

Defining that system termination X is a successor of Y and Y a predecessor of X if X branches out from Y, and X is the root of a tree if it has no predecessor before it, then the basic storage cell for system termination A can be described as follows:

A

I_A	f_1	f_2	f_3	f_4	f_5

Let $c(f_i)$ = content of i-th field in a storage cell I_A, where IA is an internal index for a system termination A (data), then

$c(f_1)$ = the number of system terminations under A

$c(f_2)$ = a pointer which points to the first successor of A

$c(f_3)$ = a pointer which points to the next system termination whose predecessor is the same as A's

$c(f_4)$ = a pointer which points back to the previous system termination whose predecessor is the same as A's

$c(f_5)$ = a pointer which points to A's predecessor

When there is a 'zero' in a field, this indicates there is no one relating to A under that specific relationship. Given a tree as Figure 2-5, A is root of the tree; it has 4 successors, i.e., B, C, D, and E. Figure 2-6 is the internal representation of that relationship among indices I_A, I_B, I_C, I_D, and I_E which are internal cardinal numbers for system terminations A, B, C, D, and E.

The first field of storage cell I_A indicates that there are four system terminations under I_A; the pointer to I_B says that I_B is its first successor. Since I_A is the root of the tree, the other three fields are left with zeros.

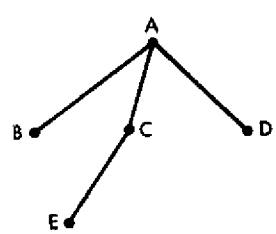

Figure 2-5. A Tree with A as its Root

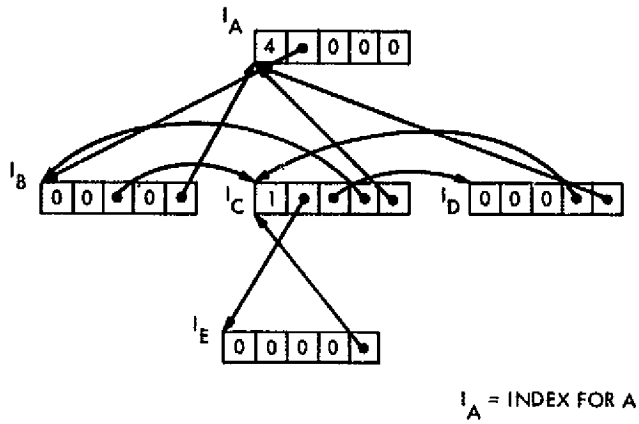

Figure 2-6. Internal Representation of the Tree in Figure 2-5

In the case of I_C, I_D is the next successor of I_A and the previous successor of I_A is I_B. Its third field has a pointer pointing to I_D, and its fourth field a pointer pointing to I_B.

2.2.1.2 Program. The STACOM program consists of twelve functionally independent routines. Figure 2-7 shows the basic structure of the program. The functional interrelationship is indicated by arrows.

An arrow from routine A to routine B indicates that routine B will be called upon by routine A during its execution. All of these routines communicate to each other through the COMMON block in addition to the normal subroutine arguments.

Major functions of eleven of these routines are given below. RSPNSE Routine is described in the following paragraph.

(1) MAIN Routine

This is the master routine of the STACOM program. In its execution, it reads in all the data required from an input device (card reader or demand terminal) and performs calculations of distances between any two system terminations. It assigns system terminations to regions, and, if necessary, selects the regional switching center by finding the system termination in the region with the minimal traffic-distance product sum. It calls upon routine RGNNET to build a star network and then performs network optimization, if required, for each of these regions.

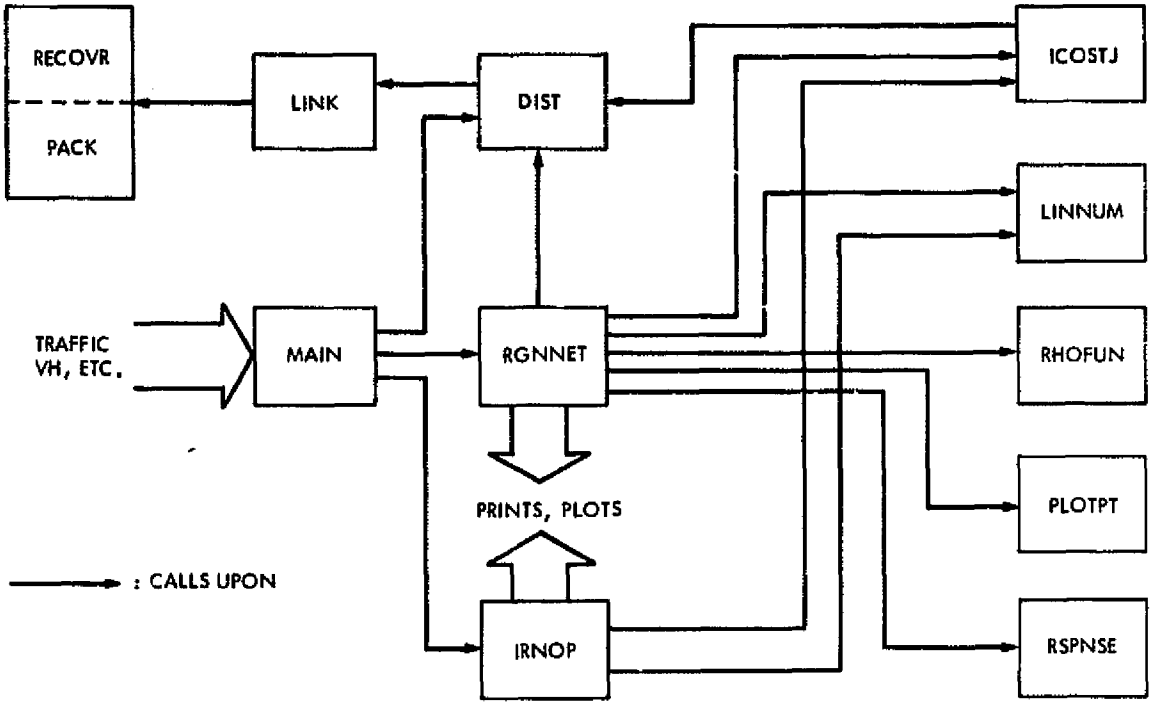

Figure 2-7. STACOM Program Structure

It also performs the construction of an inter-regional network and its optimization by calling subroutine IRNOP.

In addition to these processings, the MAIN routine also prints out distance matrix, traffic matrix, and lists of system terminations by region.

(2) RGNNET Routine

This routine is called upon only by the MAIN routine. Its main functions are the formation and optimization of regional star networks. During the formation of a regional star network, each system termination is linked directly to the designated or selected Regional Switching Center (RSC) by assigning the RSC index to the last field of each associated storage cell. Tree relationships are built among system terminations by assigning pointers to the third and fourth fields of each storage cell. The resulting star network is then printed on the printer.

The optimization process utilizes the Esau-Williams algorithm (Reference 1) with some modifications. It consists of two steps: searching for a central link (a direct link from a system termination to RSC) with best cost savings under constraints (such as response-time requirement), and subsequent network updating. This network optimization process is executed only upon request. When no further cost improvement is possible, this routine prints a resulting network with data such as number of system terminations and the response time, traffic, cost, etc., associated with each multidrop line. Routine PLOTPT is then called upon to plot the resulting network layout.

(3) IRNOP Routine

This routine is called upon to act by routine MAIN. It forms an interregional network and then performs its optimization. The interregional lines are assumed to be full-duplex lines. During the optimization process, no line between two RSCs can be eliminated if traffic between them cannot be handled through only one intermediate RSC. Also, each RSC requires at least two lines to other RSCs.

(4) LINNUM Routine

This routine provides an estimated line configuration required to satisfy a given traffic load and is mainly called upon by routine RGNNET. During its execution, utilization of selected lines are calculated against the given traffic load by calling RHOFUN so that effective line utilization is less than the pre-determined number.

(5) RHOFUN Routine

This routine calculates the line effective utilization for a given traffic and line configuration.

(6) ICOSTJ Routine

Given the line configuration and indices for any two system terminations, this routine calculates the installation costs and annual recurring costs for the line and other chargeable items required. In calculating line costs, it calls upon routine DIST for distance data between two given system terminations. Resulting cost data are arranged by chargeable item type.

(7) DIST Routine

This routine retrieves distance data between any two system terminations by calling routine PACK. When the

distance is greater than 510 miles, it retrieves distance data by calling routine RECOVR.

(8) PACK Routine

This routine stores or retrieves distance data between any two system terminations. It is called upon by routine MAIN for distance data depositing, and called upon by routine DIST for its retrieval. For the purpose of saving storage, distance data has been compressed, and each 36-bit word has been divided into four sub-words of 9 bits. Therefore, any distance datum with value equal to or greater than 511 is stored in another specified area; its retrieval calls upon routine RECOVR.

(9) RECOVR Routine

During distance data retrieval in the execution of the DIST routine, if the return value from routine PACK is 511, this routine will be called upon to provide the actual distance data, which is equal to or greater than 511.

(10) LINK Routine

Since the distance between any two system terminations I and J is independent of how I and J are referred to, the routine LINK provides a mechanism for preserving such an independency by mapping I and J into an absolute index.

(11) PLOTPT Routine

This routine provides instructions for plotting a given point on a CalComp plotter. Location of a point is calculated by its associated Vertical-Horizontal (V-H) coordinates (defined under Paragraph 2.4.2).

2.2.2 Response Time Algorithm -- RSPNSE Routine

There is a limit on the number of terminals which can be linked together by a multidrop line due to constraints on reliability and response time. However, it would be an oversimplification to just use a particular number as the main constraint in determining how many terminals a multidrop line can have. In reality, the response time of a given multidrop line depends on the amount of traffic, the number of terminals on the line, and very heavily, on the number of transactions to be processed in the data base computer system.

In the STACOM program, a response time algorithm is implemented in such a way that during the network optimization process it is used to accept or reject the addition of a given terminal to a multidrop line. This response time routine calculates the average response time

on the given multidrop line, given the number of terminals and amount of peak traffic on the line. This average response time accounts for the following types of delays; the wait-for-line time and line service time for the inquiry message from a terminal to the central switcher (i.e., a switcher which either contains data bases or communicates directly with the data base computer), the computer turnaround time at the switcher, and the wait-for line time and line service time for the returned message to the terminal. When there is an RSC between a terminal and the central switcher, the turnaround time at the RSC and the line service time between the RSC and the central switcher are counted as part of the average response time. Before its inclusion in the STACOM program, the fidelity of this algorithm was evaluated by simulation and found to be acceptable.

2.2.3 Flexibility

At the outset of the STACOM project it was anticipated that the STACOM program would be used for states with varying traffic requirements; it was decided that the resulting program should be as flexible and general as possible. With this in mind, the STACOM program has been implemented with the following features which make it flexible and thereby enhance its capabilities:

(1) Rate Structures, Line Types, and Chargeable Items

Because a State can have more than one rate structure (tariff) applicable at any one time, the STACOM program has been designed to accommodate this.

Under a specific rate structure, any combination of line types with their names, line capacities, and basic cost figures can be prescribed to the program. In addition to the line cost, any number of chargeable items associated with each line type can be prescribed to the program. For example, any combination of cost items such as service terminals, drops, modem and others can be used. Furthermore, under the Multischedule Private Line (MPL) tariffs given by AT&T for interstate communication lines, the monthly line charge between any two terminals is now a function of both the inter-city distance and the traffic densities of both terminal cities. The STACOM program has been implemented in such a way that it can take line-cost figures based on MPL tariffs or other tariffs.

(2) Region Formation, Switcher Selection, and Network Optimization.

Given a set of system terminations dividing them into regions can be performed in either of the following ways: the user can pre-assign some or all of the terminations into preselected regions, alternatively, the user can let the program perform the region

formation by simply providing the system centroid. Following the formation process, the STACOM program will start selecting regional switching centers for regions without a preassigned switching center. The process of regional network formation and its optimization will then follow.

(3) Number of Terminals per Multidrop Line.

It may be desirable to set a limit on the number of terminals on a multidrop line. In its implementation, the STACOM program takes this number from the user's input data as a constraint during its optimization process.

(4) Average Terminal Response Time.

Besides the limit on the number of terminals allowed on a multidrop line, a good network design also requires a constraint on the average terminal response time on a multidrop line. The STACOM program allows a user to specify the limit on a run basis.

2.2.4 Programming Language

The STACOM program is implemented with the FORTRAN V language of UNIVAC systems, compiled with the EXEC-8 FORTRAN processor, and mapped by its MAP processor.

Detailed features of FORTRAN V programming language are described in Reference 2.

2.2.5 Operating System Requirements

Because the EXEC-8 operating system of the UNIVAC 1108 computer was used in the development of the STACOM program, the current edition of the STACOM program can only be executed under the EXEC-8 system. Furthermore, since a CalComp routine is linked with the program, the plotter must be part of the operating system. If such a hardware unit is not included in the system, the STACOM program must be updated to reflect this environment.

In addition, the current STACOM program was designed with the feature that all the desired output be put into a FORTRAN file designated as 100. Before executing this program, a file with the name 100 must be assigned. Otherwise, regular WRITE unit 6 will be the destination output file, e.g., the print output will go the user's demand terminal when it is run as a demand job.

As an example, the following is a complete list of EXEC-8 control statements which need to be prepared or typed in after the run card for properly executing the STACOM program.

```
@ASG,UP 100
@SYM,P PUNCH$,,G9PLTF
@XQT  File.STACOM
        .
        .
      (data)
        .
        .
@BRKPT 100
@FREE  100
@SYM   100,,T4
```

The @SYM,P command directs the resulting plot card images to a CalComp plotter designated G9PLTF. The last @SYM command directs print output to a slow hardcopy printer designated T4.

2.2.6 Functional Limitations

While the STACOM program was designed and implemented with the intention that it be applicable as widely as possible, it does have certain limitations. These are due mainly to the limit of the program size (sum of I and D bank) allowed under the EXEC-8 system for simplistic programs. The maximum program size allowed is 65k words per program. Although it is more convenient for later use to assign all parameters with maximum values (as long as the overall program size is within the 65K-word limit) this results in greater expense in use of the program due to the higher core-time product. Therefore, it is recommended that all parameters be set at values just high enough for anticipated use.

After setting parameter values, the STACOM program capabilities are then limited to these assigned values. If a run requires that a certain parameter value be exceeded, the STACOM program must be recompiled and remapped.

2.3 INPUT

2.3.1 Data Requirements

A setup of input data is needed before starting a STACOM program run. The list of data items which need to be provided by the user are given here in temporal order and explained briefly. Detailed FORTRAN V formats for these are described in Table 3-1 of Section 3.

2.3.1.1 <u>Number of Regions</u>. The first datum needed by the STACOM program is the exact number of regions under consideration. This number (designated internally as NR1) instructs the program to divide all of the system terminations into NR1 regions.

2.3.1.2 Number of System Terminations, Number of Data Bases, and Number of Terminal Cities. The number of system terminations is the actual number of system terminations to be operated on by the STACOM program, and is designated internally as N1. In anticipation of possible multiple data bases at different locations, the number of data bases (designated internally as N7) informs the program that each system termination has N7 pairs of data (one pair per data base).

The number of terminal cities (NCITY) informs the program that NCITY V-H coordinates are to be provided later.

2.3.1.3 Identification of Data Bases and V-H Coordinates. N7 identifications provides the exact locations of data bases under consideration. All of the V-H coordinates for NCITY terminal cities are needed for calculating distances between any two cities.

2.3.1.4 Descriptions of System Terminations. For each of the system terminations under consideration, the set of data, i.e., identification, name, city location index, and traffic to all of N7 data bases are needed in order to properly execute the STACOM program.

2.3.1.5 Rate Structure and its Application Rule. There may exist one or more line tariffs applicable to different portions of any given state. The STACOM program has been designed with a capability to handle this situation. The number of applicable rate structures (line tariffs) and the rule governing their applications have to be input to the program by the user.

2.3.1.6 Traffic Density and Applicable Rate Structure for each System Termination. In order to accommodate the fact that costs for lines between high traffic density cities are much lower than for others, (e.g., TELPAK lines), the traffic density index and applicable rate structure for each system termination informs and directs the program to properly perform costing on lines connected to this termination.

2.3.1.7 Descriptions of Applicable Lines. The user dictates to the STACOM program the types of applicable communication lines by providing number of lines, their names and capacities, their desired maximum utilizations and their uses.

2.3.1.8 Descriptions of Chargeable Items. In addition to costs for lines, there are several other chargeable items such as modems, service terminals and drop charges. The user must provide the number of chargeable items and their names. Furthermore, the user has to provide the STACOM program with installation and monthly recurring costs for each chargeable item as a function of rate structure, line type, traffic density, and duplexing mode. This costing information is required to estimate overall cost of the to-be-designed communication network.

2.3.1.9 Line Cost Data. Installation and monthly recurring costs for lines for each applicable line type as a function of rate structure, traffic density, and duplexing mode are also required.

2.3.1.10 Constraints on Formation of Regions. The user can preload any number of system terminations to preselected regions if so desired by assigning them to their specific destinations (regions). He can also put constraints on preselected regions by not allowing any insertion of system terminations to these regions.

2.3.1.11 Options on Regional Network Optimization. The user can direct the STACOM program to perform regional network optimization on regions if required. This is done by simply specifying such requests to the program.

2.3.1.12 Protocol Characteristics for Multidrop Lines. The user must provide characteristics of line protocol to the program. For example, characteristics such as number of polling characters, NAK response characters, and message overhead characters are required. These data, along with the other line traffic characteristics data, enable the STACOM program to estimate the average terminal response time for a given multidrop line.

2.3.1.13 Characteristics of Future Traffic. Characteristics for future line traffic are also required. Data such as number of message types, their ratios, and average lengths allow the program to compute line service time and line utilization, which, in turn, are used to estimate the average terminal response time.

2.3.1.14 Preloading System Terminations to Preselected Regions and Pre-Assigning Regional Switching Centers. If the user wishes to assign certain system terminations to preselected regions and to pre-assigned regional switching centers, he can now proceed to do so. Otherwise, the program will perform these functions automatically.

2.3.1.15 Assigning System Centroid. If the STACOM program is required to divide system terminations into regions and to select regional switching centers, the system centroid is required so that the program can divide them properly (in a geographical sense).

2.3.1.16 Descriptions of the Central Switcher. Data describing the central switcher are needed to compute switcher turn-around time for a given transaction. These data include the estimated message rate at the switcher, number of transactions entering the switcher for completing a message, average service time per transaction, and number of processors available.

2.3.1.17 Constraints on Multidropped Lines and Average System Response Time. The user can impose a constraint on the number of terminals allowed on a multidrop line either by limiting the number of terminals on a multidrop line, or by setting up a maximum average response time limit to the multidrop line or both.

2.3.1.18 CalComp Plot. The user can request a CalComp plot of the final multidrop communication network if so desired. Of course, some installations may not have such a device and the STACOM needs to be recompiled without plotting routine.

2.4 PROCESSING LOGIC

The previous section described the type of input data needed by the STACOM program. This subsection will be devoted to the processing logic implemented in the program.

2.4.1 Traffic Calculation

2.4.1.1 Traffic Conversion. In the STACOM program, each system termination is provided with a set of traffic figures which represent outgoing traffic to and incoming traffic from each data base in the system. The unit of traffic is specified as characters per minute.

The traffic data for all system terminations are read into the matrix TRAFD(N1, 2, N7) during the data input phase, where N1 is the number of system terminations and N7 is the number of data bases. While the input traffic data are given in characters per minute, the STACOM program is designed to deal with traffic in terms of bits per second (BPS). Thus, at the time of program execution, all traffic data are converted into units of bits per second by multiplying them by a factor of 8/60. Here, we assume that synchronous communication is to be used.

2.4.1.2 Origin and Destination Traffic by System Terminations. Summations across the last subscript of the TRAFD matrix are performed to give total traffic originating from and destined for each system termination. The resulting data are stored in TRAFIT (N1) and TRAFDN (N1), respectively. More specifically, originating and destination traffic totals are given by

$$\text{TRAFIT}(i) = \sum_{j=1}^{N7} \text{TRAFD}\ (i,\ 2,\ j)$$

and

$$\text{TRAFDN}(i) = \sum_{j=1}^{N7} \text{TRAFD}\ (i,\ 1,\ j)$$

2.4.2 Distance Calculation

2.4.2.1 V-H Coordinates. The length of the line plays a major role in determining line costs on communication networks. While the common carrier is free to route the line over any desired path, and may switch the line to different paths to circumnavigate breakdowns or overloads, the line charges are normally independent of actual line layout and are based on the straight line distance between the points connected.

The AT&T has a system in which they have divided the United States by horizontal and vertical grid lines. By means of these lines, they give almost every city/location a vertical (V) and horizontal (H) coordinate, these coordinates provide the layout-free way of distance calculation.

2.4.2.2 Distances between System Terminations. With V-H coordinates as defined by the AT&T, the distance between any two locations is calculated as follows (Reference 3):

(1) Obtain the V and H coordinates for these two locations.

(2) Obtain the difference between the V coordinates and the difference between the H coordinates of these two locations.

(3) Square each difference obtained in 2 and take a summation of both squares.

(4) Divide the sum obtained in 3 above by 10. Round to next integer number if any fraction is obtained.

(5) Obtain the square root of the result obtained in 4 above. This is the distance between the given locations in miles. (fractional miles being considered as full miles.)

For example, to calculate the distance between Austin and Dallas, Texas, we proceed as follows:

	V	H
Austin	9005	3996
Dallas	8436	4034
Difference	569	38

$$\text{Distance} = \sqrt{\frac{(569)^2 + (38)^2}{10}} = \sqrt{\frac{323761 + 1444}{10}}$$

$$= \sqrt{32521} = 181 \text{ miles}$$

When a specific location in the United States is not designated with specific V and H coordinates, it is normally assigned with the same V and H coordinates as the closest location.

Following the procedures as given above, the distance between any given two system terminations is calculated and stored in arrays DSTNCE or IVRD.

2.4.2.3 Distance Data Compression and Overflow Table. Given N system terminations, there are N(N-1)/2 combinations in choosing two system terminations from them. Furthermore in any given state, there exist only a few large inter-terminal distances. These two facts indicate that some reduction in resulting STACOM program size can be made by performing compression of distance data. Two efforts have been undertaken for that purpose.

Under the UNIVAC system, each computer word is 36 bits long. We divide each word into four 9-bit segments. Each segment is used to store one distance datum with values ranging from 0 to 511. To compensate for the fact that some distances data may be greater than 511, an overflow table IVRD is provided to collect oversized distance data. In other words, given two system terminations with indices I and J, its distance is recorded into DSTNCE as follows:

(1) Find corresponding V-H coordinates of locations for both system terminations.

(2) Calculate distance D according to the procedure given in Paragraph 2.4.2.2.

(3) Find a unique and absolute location L in DSTNCE, by using the following equation:

$$L = I*NPC+J - \Delta(I)$$

where

$$\Delta(I) = \sum_{i=1}^{I} i,$$

and

$$I < J$$

NPC = number of distinctive locations in the system

This mapping function is performed by subroutine LINK,

(4) Define

$$L1 = \lfloor (L-1)/4 \rfloor + 1$$
$$S1 = (L-1) \text{ Modulo } 4 + 1$$

where $\lfloor x \rfloor$ = the integer part of X and

$$D1 = \begin{cases} D \text{ if } D < 511 \\ 511 \text{ if } D \geq 511 \end{cases}$$

(5) Store D1 in segment S1 of entry L1 of table DSTNCE.

(6) If $D \geq 511$, store L and D in next available space of table IVRD.

On the other hand, given two system terminations with indices I and J, the retrieval of distance is performed as follows:

(1) Calculate L, L1 and S1 as described above.

(2) Retrieve the content D1 in segment S1 of entry L1 of table DSTNCE. If $D1 < 511$, it is the distance.

(3) If $D1 = 511$, retrieve the second element of the row of table IVRD, whose first element contains value L. The retrieval value is the distance.

2.4.3 Formation of Regions

After traffic summations and distance table formation are completed, the STACOM program starts to form regions. It assigns all of the non-preloaded system terminations to regions which can accommodate them. Figure 2-8 illustrates the process of such a function.

The process begins with an estimation of the traffic per region, called TPR, which is obtained by averaging the total non-binding traffic, i.e.,

$$TPR = TPR1/ANR1$$

with

$$TPR1 = \sum_{\substack{i \notin I \\ 1 \leq i \leq N1}} [TRAFIT(i) + TRAFDN(i)]$$

where

I = the set of system terminations in preloaded regions which do not allow other system terminations to be inserted to them

ANRI = NR1 - [number of preloaded regions which do not allow any insertions]

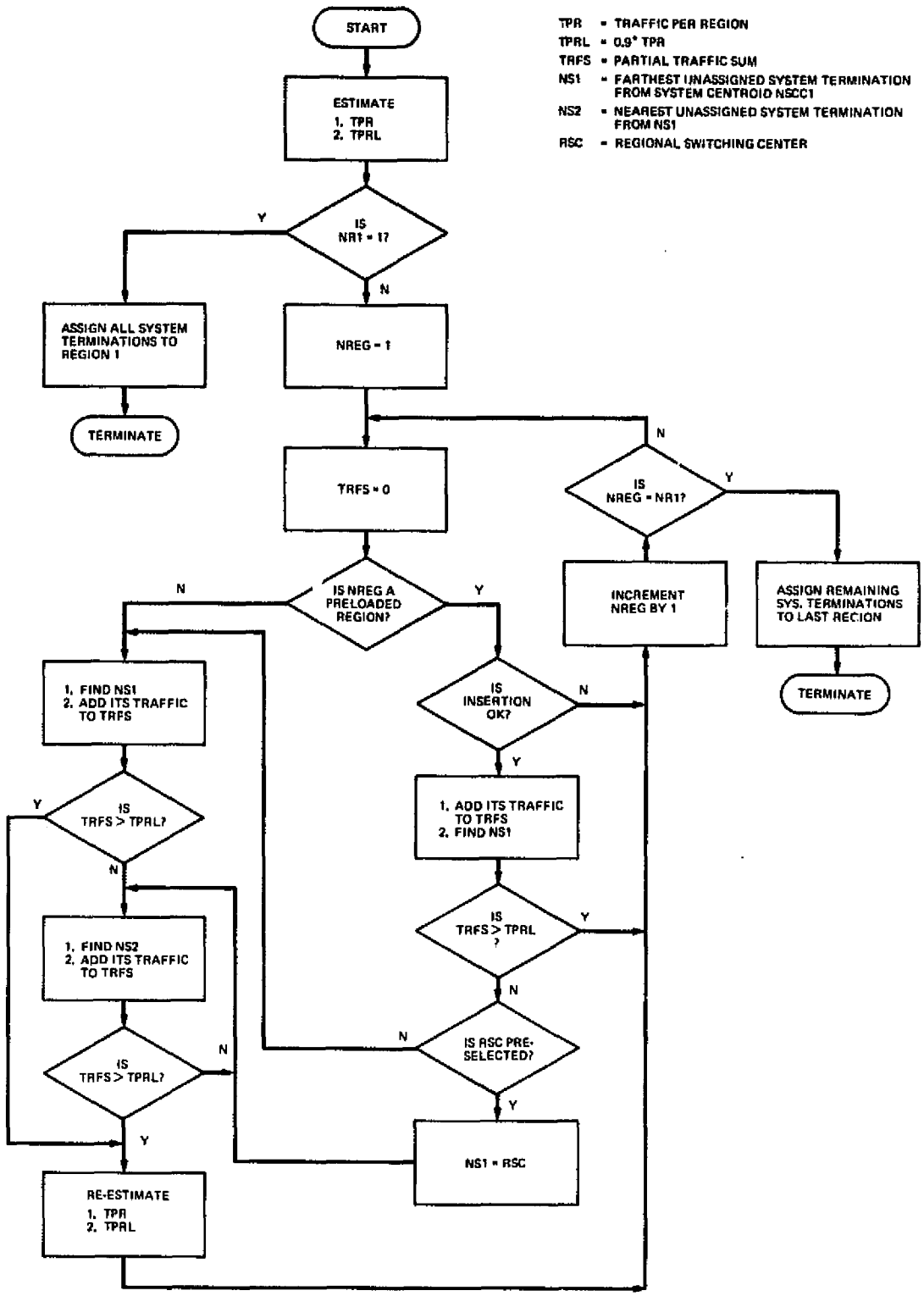

Figure 2-8. Flow Chart for Formations of Regions

When the number of regions is 1, all of the system terminations are assigned to the region and no other region formation process is performed. Otherwise, the program starts assigning system terminations to regions (in a cardinal order) which allow their entries.

The following two subsections describe the detailed processes for assigning system terminations to a region either with preloading or without preloading.

2.4.3.1 Assigning System Terminations to a Region without Preloading. When a region NREG is not preloaded with any system termination, processing continues with the finding of the farthest unassigned system termination (NS1) from the system centroid (NSCC1). This system termination is then assigned to the region NREG; its incoming and outgoing traffic is added to the partial sum traffic, called TRFS. The resulting TRFS is then tested. If it is greater than TPRL, (lower bound), which is equal to 0.9 x TPR, assignment processing for region NREG ends with re-estimating TPR and TPRL which are obtained as follows:

TPR1 = TPR1 - TPFS

TPR = TPR1/(ANR1 - 1.)

TPRL = 0.9 * TPR

On the other hand, if TPRS is less than or equal to TPRL, additional system terminations can be assigned to this region. The next system termination for addition to this region is selected by finding the nearest unassigned system termination, called NS2, from NS1. NS2 is then assigned to region NREG and its traffic added to TRFS. The value of TRF is again tested against TPRL to determine if other additions are possible.

This process is repeated until partial regional traffic sum TRFS is greater than TPRL. At this point, the region is considered full and addition of system terminations to this region stops. However, if the region being filled is the last one, all remaining system terminations are placed into this last region. Otherwise, the program continues to work on the next region. Before leaving region NREG, it re-estimates TPR and TPRL as shown before.

2.4.3.2 Assigning System Terminations to a Region with Preloading. If the region NREG is a preloaded region, i.e., it has been preloaded with system terminations, the program continues with a test. The test is needed to determine whether region NREG will accept any additional system terminations. If other insertions to the region are not allowed, the processing on this region stops and continues to the next region.

Otherwise, the program starts adding traffic to all preloaded system terminations to TRFS and finding the farthest unassigned system termination NS1 from the system centroid. It then tests whether TRFS is

greater than TPRL. If it is greater, the program stops here and continues to process the next region.

When TRFS is less than TPRL, the program checks whether there is a preselected RSC for the region NREG. If there is, the program uses the RSC as the NS1. Then it follows the same procedure as described in paragraph 2.4.3.1 to add more system terminations to the region.

It should be noted that STACOM has been implemented in such a way that when it is desired to preload some or all regions, the last one need not be specified. The program will assign the rest of the unassigned system terminations to the last region.

2.4.3.3 Example for Formation of Regions. Figure 2-9 illustrates the results of applying the formation of region logic to a Texas communication system with 265 system terminations. In this example run, neither preloading of system terminations nor preselection of regional switching centers are requested. In other words, the program is asked to perform automatic regional formations and to select the regional switching centers. System termination Austin is chosen as the system centroid.

The total amount of traffic, TPR1 is at a rate of 1585.02/bps, and the number of regions is 2. Therefore, at the beginning, TPR is given as 1585.02/2=792.51 bps, and TPRL = 713.26 bps. In the process of assigning system terminations to region 1, El Paso is found to be the farthest location from Austin, i.e., NS1 = the internal index for system termination El Paso. With NS1 available, the program starts the procedure of searching for NS2, adding its traffic to partial sum TRFS and testing whether TRFS is greater than TPRL. It repeats the same procedure 123 times until TRFS has reached the value of 750.08 bps which is greater than TPRL.

2.4.4 Selection of Regional Switchers

Selection of regional switching centers follows formation of regions as described in Paragraph 2.4.3. For a given region, its regional switching center (RSC) can be either preselected by the user or be chosen by the program. In the latter case, the program selects the system termination within the region such that total intra-region traffic-distance products are minimized.

The functional flow chart of RSC selection is depicted in Figure 2-10. Processing begins with assigning 10^{12} to WCASE (as base for traffic-distance product sum). It then calculates the estimated sum of all traffic-distance products with each system termination in the region as an RSC site. The sum, called SUMT, is obtained as follows:

$$SUMT = \sum_{i=1}^{NMBR} [TRAFDN(i) + TRAFIT(i)] * DIST(i,K)$$

where

NMBR = number of system terminations in the region under consideration

K = the index of the system termination considered as the trial RSC site

DIST(i,K) = the distance between system termination i and the RSC trial site K

The resulting SUMT is then compared with WCASE. If SUMT is found to be less than WCASE, the value for WCASE is replaced by the value of SUMT and the corresponding index for the RSC trial site is the updated RSC, called NRSC.

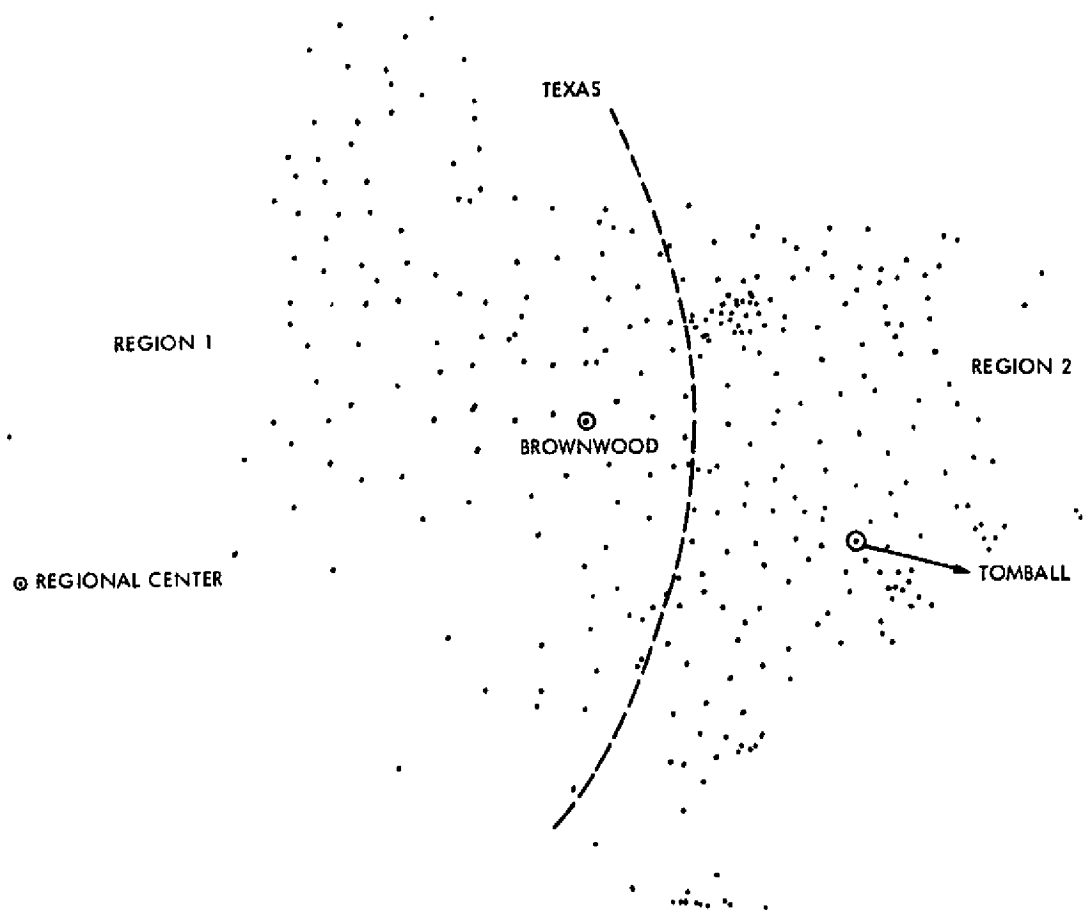

Figure 2-9. Example of Region Network Formation and Regional Switcher Selection

NRSC = INDEX FOR REGIONAL SWITCHING CENTER

$$SUMT = \sum_{i=1}^{NMBR} [TRAFDN(i) + TRAFIT(i)] * DIST(i, K)$$

NMBR = NUMBER OF SYSTEM TERMINATIONS IN THE REGION

DIST(i, K) = DISTANCE BETWEEN SYSTEM TERMINATIONS i AND K

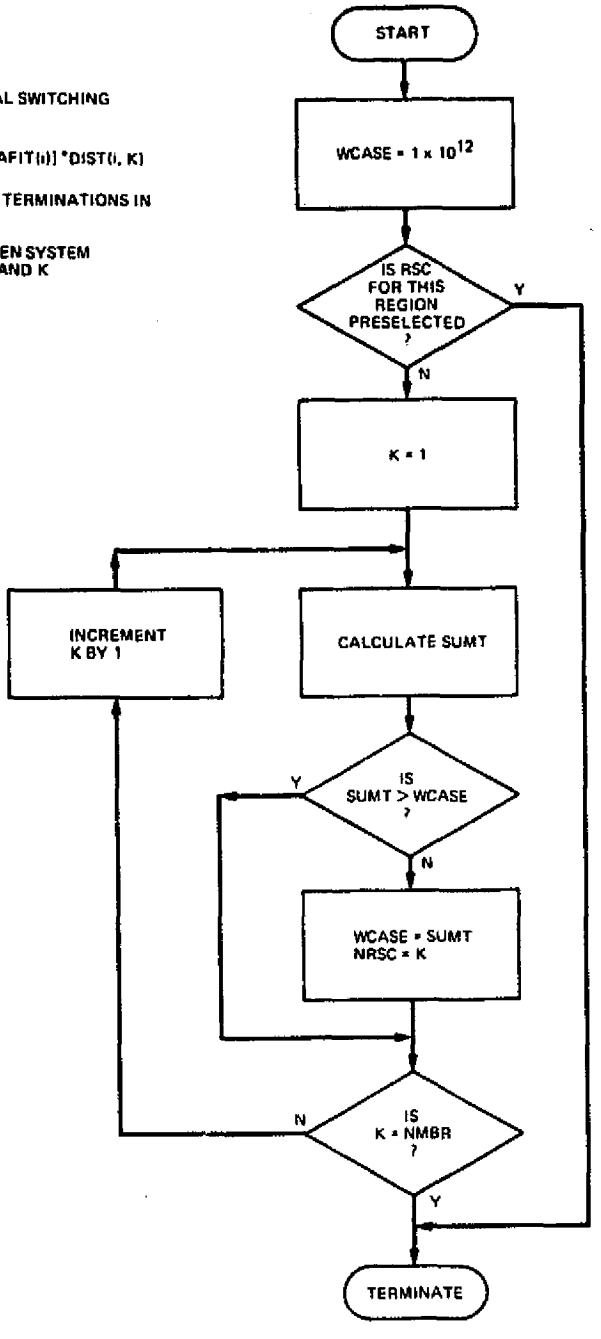

Figure 2-10. Flow Chart for RSC Selection

After the above processing has been repeated NMBR times, the resulting NRSC is the index for the selected RSC and WCASE the region's minimal traffic-distance product sum.

When a regional switching center is preselected by the user, the program skips the process as described here.

Following the selection of a regional switching center for a given region, the program continues to perform regional network formation and network optimization before it repeats the selection of regional switching centers for remaining regions.

The process of regional network formation and optimization is discussed in Paragraphs 2.4.5 and 2.4.6.

2.4.4.1 Example for Selecting a Regional Switching Center. Following the formation of regions in the example given in Paragraph 2.4.3.3, the program has chosen Brownwood of Brown county as the switcher location for Region 1 and Tomball of Harris county as the switcher location for Region 2. Both locations have been found to provide the minimal traffic-distance product sums for respective regions. These two cities are shown in Figure 2-9.

2.4.5 Formation of Regional Star Networks

Formation of a regional network starts with a star network and then continues with an optimization process which, most of the time, results in a cost-saving multidrop network. This subsection describes the process of forming a star network, which is depicted in Figure 2-11. The initial regional network is formed by directly connecting each system termination to the regional switching center. Selection of these intra-region lines is constrained by the rule that each selected line should maintain the line utilization factor, called RHO, at a value less or equal to a preselected number, say, 0.7.

For each system termination in the region, the program finds incoming and outgoing traffic, TRFOUT and TRFIN, and also its distance, DSTN, from the RSC for each system termination in the region. The program calls subroutine LINNUM, which constructs a line configuration LDUMMY and calculates its line utilization, based on the values of TRFIN and TRFOUT provided. The processing continues to calculate both the cost, COST, for the derived line configuration LDUMMY and its response time RSPTIM. Finally, all these data are stored for later printout and comparisons.

The derivation of line configuration LDUMMY by subroutine LINNUM and the associated cost, COST, deserves more explanation. The program assumes that the duplexing mode for all line types under consideration to be half-duplexed. Therefore, subroutine LINNUM will sum up TRFIN and TRFOUT and find an applicable line with the least capacity which assures less than 0.7 of utilization. When the highest capacity line cannot handle the traffic, the routine will try to add one additional line with least capacity until the constraint of 0.7 utilization factor is satisfied. With line configuration LDUMMY obtained, calculation of cost,

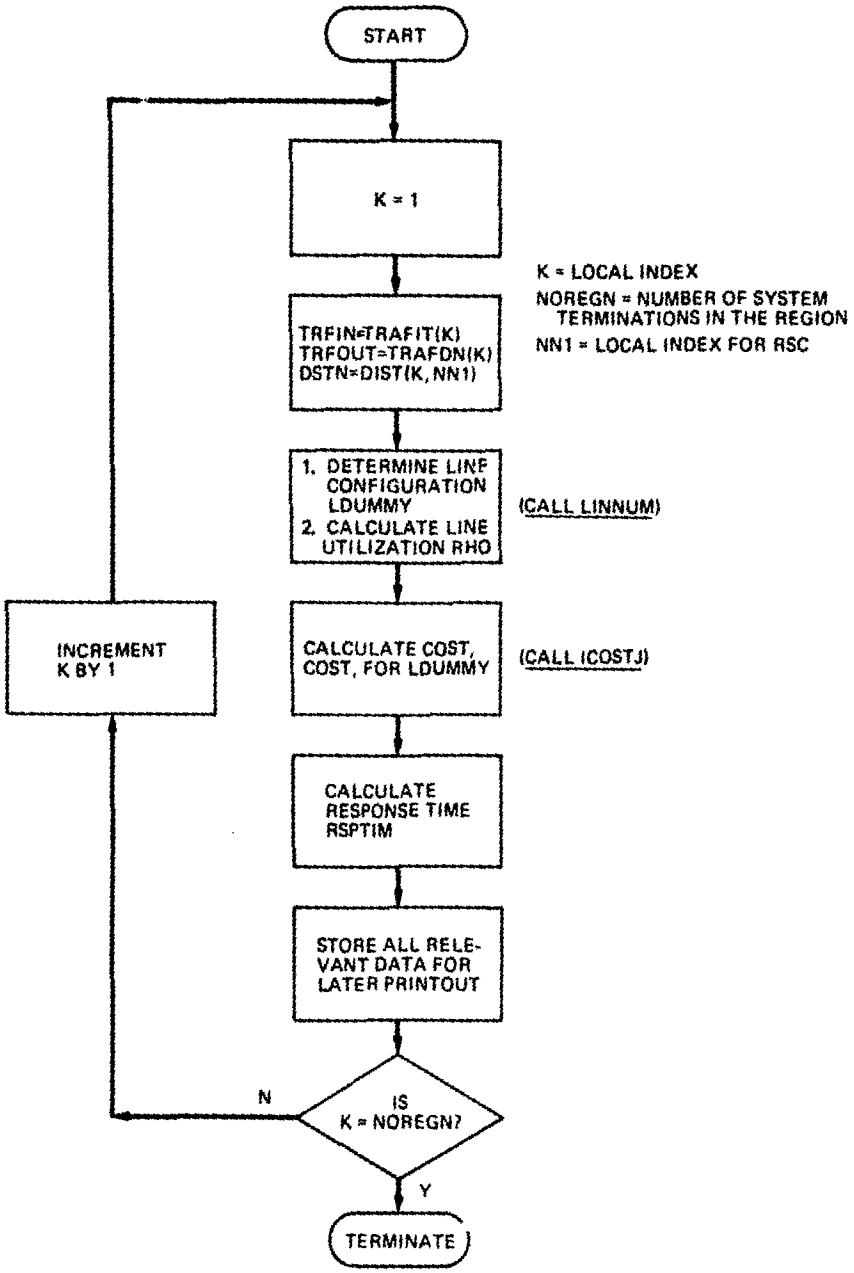

Figure 2-11. Flow Chart for Regional Star Network Formation

COST, for the direct link between system termination K and the RSC is performed by ICOSTJ. The routine ICOSTJ calculates all of the related installation and annual recurring costs for lines and other chargeable items. All of these itemized costs are then summarized as COST. Cost calculations are performed on the basis of the rate structures applicable to system terminations at both ends.

2.4.5.1 Examples of Line Selections. Table 2-1 lists some examples of line configurations results obtained by LINNUM, and illustrates how the LINNUM subroutine selects lines for given traffic. The first column of the table represents total traffic (sum of TRFIN and TRFOUT). In this example, it is assumed that only line types with capacities of 300 bps, 1200 bps and 4800 bps are under consideration. Line utilization factor has been constrained to not greater than 0.7.

2.4.6 Optimization of Regional Networks

After completing the formation of a regional star network, the program proceeds to the optimization process, if requested. The optimization process basically utilizes a technique developed by L. R. Esau and K. C. Williams (Reference 1) and is used to minimize line operating costs. The actual implementation of the technique has been made with several additional constraints for practical reasons.

Before going into detail, here is a brief explanation of the goal and process of network optimization of a regional star network. Figure 2-12 depicts a typical star network in which each system termination has a direct link, called central link, to the central regional center. The goal of optimization is to reduce line costs by eliminating as many central links by connecting the associated system terminations to their nearby system terminations as possible, until it is no longer cost-effective to do so. Figure 2-13 shows a typical multidrop network

Table 2-1. Examples of Line Configurations Obtained by Subroutine LINNUM

Traffic (bps)	Line Type			
	300 bps	1200 bps	2400 bps	4800 bps
200	1	0	0	0
500	0	1	0	0
850	0	0	1	0
1300	0	0	1	0
2000	0	0	0	1
3500	1	0	0	1

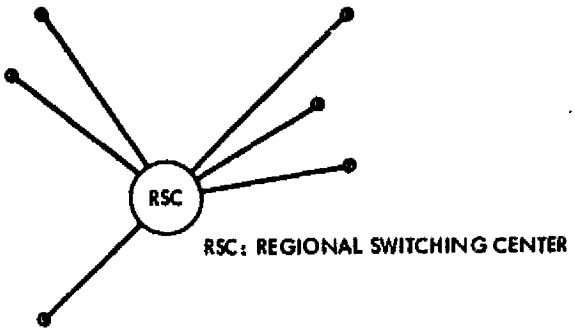

Figure 2-12. Typical Star Network

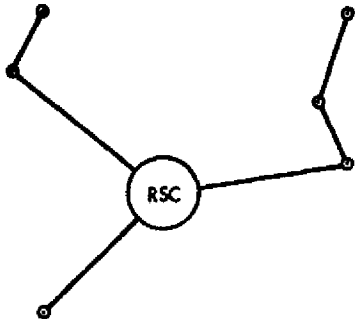

Figure 2-13. Typical Multidrop Network of Optimization

after this goal is met, assuming that the line cost is only a function of distance. While this example as given depicts the main concept of network optimization, it does not illustrate the process of sizing each newly formed multidrop line to reflect the increase of traffic resulting from the addition of new system terminations.

The following section describes the logic implemented in this program.

2.4.6.1 Network Optimization by Esau-Williams Technique. Before explaining the logic for network optimization implemented in the STACOM program, a brief explanation of the Esau-Williams network optimization process is appropriate. With a given star network, the basic process of the Esau-William technique is to repeat two basic steps until it is no longer possible to derive any cost saving.

For the convenience of the following discussion we define a sub-network (subnet) as a tree-type multidrop line consisting of one or more system terminations and having a central link connected to the regional center. Each central link of a given star type network is a simple sub-network by definition.

The first step involves searching for the best central link of a system termination, K, so that its elimination and the subsequent reconnection of the rest of the sub-network to a nearby sub-network L provides the best cost saving. In other words, for each system termination, i, with a central link to the regional center, this routine estimates the best saving, S_i, resulting from eliminating the given central link and reconnecting the rest of the subnetwork to a nearby subnetwork beginning with L_i. If we express it as a formula, then

$$K = i \text{ such that } S_i = \max_{j \in C} \{S_j\}$$

L_i = j for which the integration of K and L sub-networks provides S_K which is the best saving

where

C = the set of system terminations with central links to regional center

j = the first system termination of sub-network L

The other step involves network updates after it has been determined that the central link from system termination K is to be eliminated; this step will integrate remaining subnet K with subnet L utilizing an alternate route.

It should be noted that although this network optimization process will generate the best network most of the time, it does not always provide the best one. In other words, this technique generates the local optimal solution rather than the global solution. This is because the first selection of a central link for elimination dictates the final network to be created by repeating the process as described above. However, as shown in Reference 4, the process does provide a solution which is always close to, if not, the best.

2.4.6.2 Network Optimization Logic in STACOM Program. The optimization logic as implemented in the STACOM program basically utilizes the Esau-Williams technique. However, constraints have been incorporated into it in order to satisfy project requirements and to eliminate unnecessary searching. Figure 2-14 shows the functional flow chart for the overall logic.

The optimization process starts with the test to see whether there is only one sub-network left. If this is true, it stops. Otherwise, the program, utilizing four variables K, L, M and KI, starts evaluating possible cost saving by eliminating central link K and

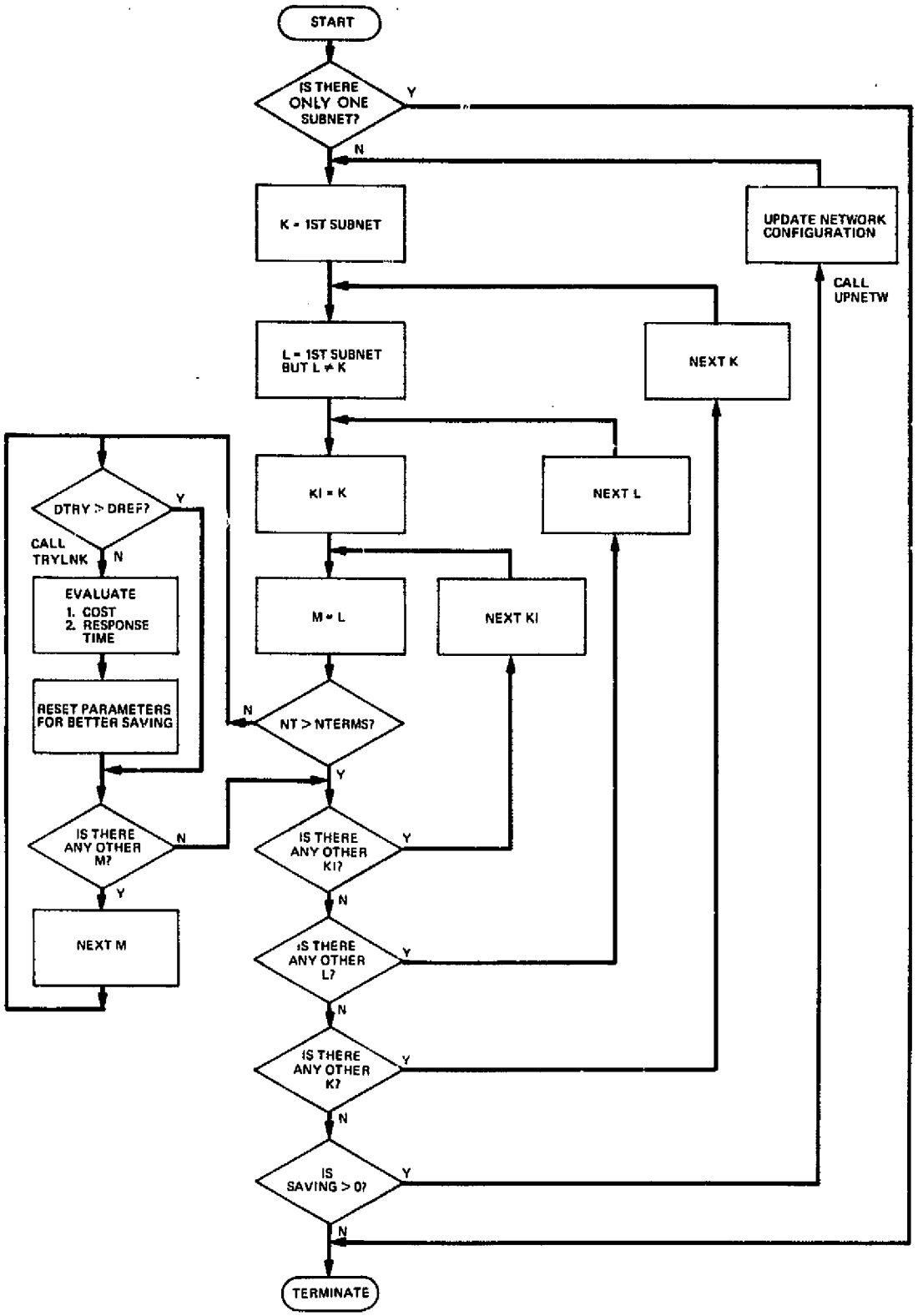

Figure 2-14. Flow Chart for Subroutine ESSWIL

reconnecting the rest of sub-network K to sub-network L through system terminations M of L and KI of K as shown in Figure 2-15.

Selections of values for variables K, L, M, and KI are in the following way. For each processing cycle, searching and updating, K is assigned the index values from the first sub-network to the last one of the existing network. For each K, L is assigned index values from the first sub-network to the last one except K ≠ L. With values for K and L chosen, M is assigned the index values of all the system terminations on sub-network L and KI the index values of all the system terminations on the sub-network K.

For each given set of K and L, the program tests whether the sum, NT, of numbers of system terminations for both sub-networks exceeds the value of NTERMS which constrains the number of system terminations on a multidrop line. If this is true, it skips the process of calling on subroutine TRYLNK, because it is not possible to integrate both sub-networks without violating the said constraint. Otherwise, it continues to the distance test.

K = THE SUBNETWORK BEGINNING WITH SYSTEM TERMINATION K

L = THE SUBNETWORK BEGINNING WITH SYSTEM TERMINATION L

M = THE SYSTEM TERMINATION ON SUBNET L TO WHICH KI IS TO BE CONNECTED

KI = THE SYSTEM TERMINATION ON SUBNET K FROM WHICH SUBNET K IS CONNECTED TO M OF SUBNET L

DREF = THE DISTANCE BETWEEN SYSTEM TERMINATIONS K AND THE RSC

DTRY = (THE DISTANCE BETWEEN SYSTEM TERMINATIONS KI AND M)/2

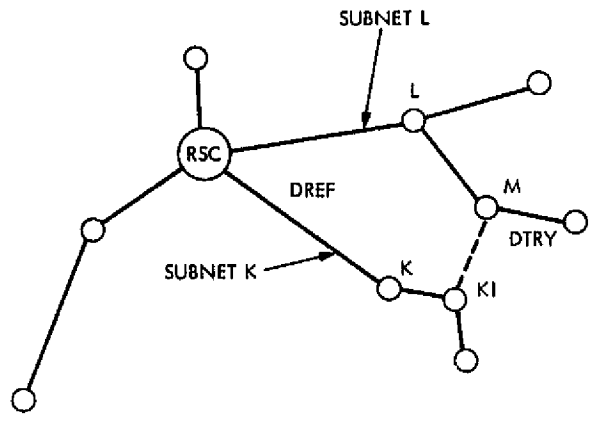

Figure 2-15. Relationship among K, L, KI, and M Parameters

The program first calculates the distance DREF between system termination K and the region switching center for each K, and then the DTRY which is half of the distance between system terminations KI and M for each combination.

If DTRY is greater than DREF, the program skips the process of calling on subroutine TRYLNK. Otherwise, it calls on subroutine TRYLNK. The purpose of subroutine TRYLNK is to estimate the possible cost saving resulting from eliminating central link K, and integrating sub-networks K and L by connecting system terminations KI of K and M of L. If the saving is better than the maximum saving obtained so far, it is used as the up-to-date best cost saving under the set of values for K, L, KI, and M. A detailed description of functions performed by subroutine TRYLNK is given in Paragraph 2.4.6.3. After all possible combinations for K, L, KI, and M have been tested and it has been found that the up-to-date best cost saving is positive, the program performs the second function of network optimization, i.e., updating the network. It then repeats the whole process on the newly updated network which happens to have one less central link.

If the up-to-date maximum cost saving is non-positive, the optimization process stops here.

2.4.6.3 <u>Function Performed by Subroutine TRYLNK for a Given Set of Values K, KI, L, and M</u>. The processing, as shown in Figure 2-16, starts with estimating the total amount of traffic that a single multidrop line (sub-network) of integrating subnetworks K and L needs to handle. It then estimates the required line configuration, LDUMMY, by calling subroutine LINNUM which has been described in Paragraph 2.4.5.1. Based on LDUMMY, the program estimates the average response time and tests it against the user-provided response time limit by calling subroutine RSPNSE. If the estimated response time is not satisfied, the program updates the line configuration LDUMMY to the next higher line type and repeats the process of estimating its average response time and testing it against the given constraint. This process ends when either there is a satisfied line configuration or it is not possible to upgrade any further.

When a satisfied line configuration is obtained, the program continues to estimate its cost saving, based on the assumed integrated sub-network. If the resulting cost saving is better than the up-to-date best cost saving, it replaces all of the maximum saving parameters, which are used to keep tracking the up-to-date best network changes; it then returns to its calling routine. If there is no line configuration satisfying the response time constraint, the process stops and the program returns to its calling routine.

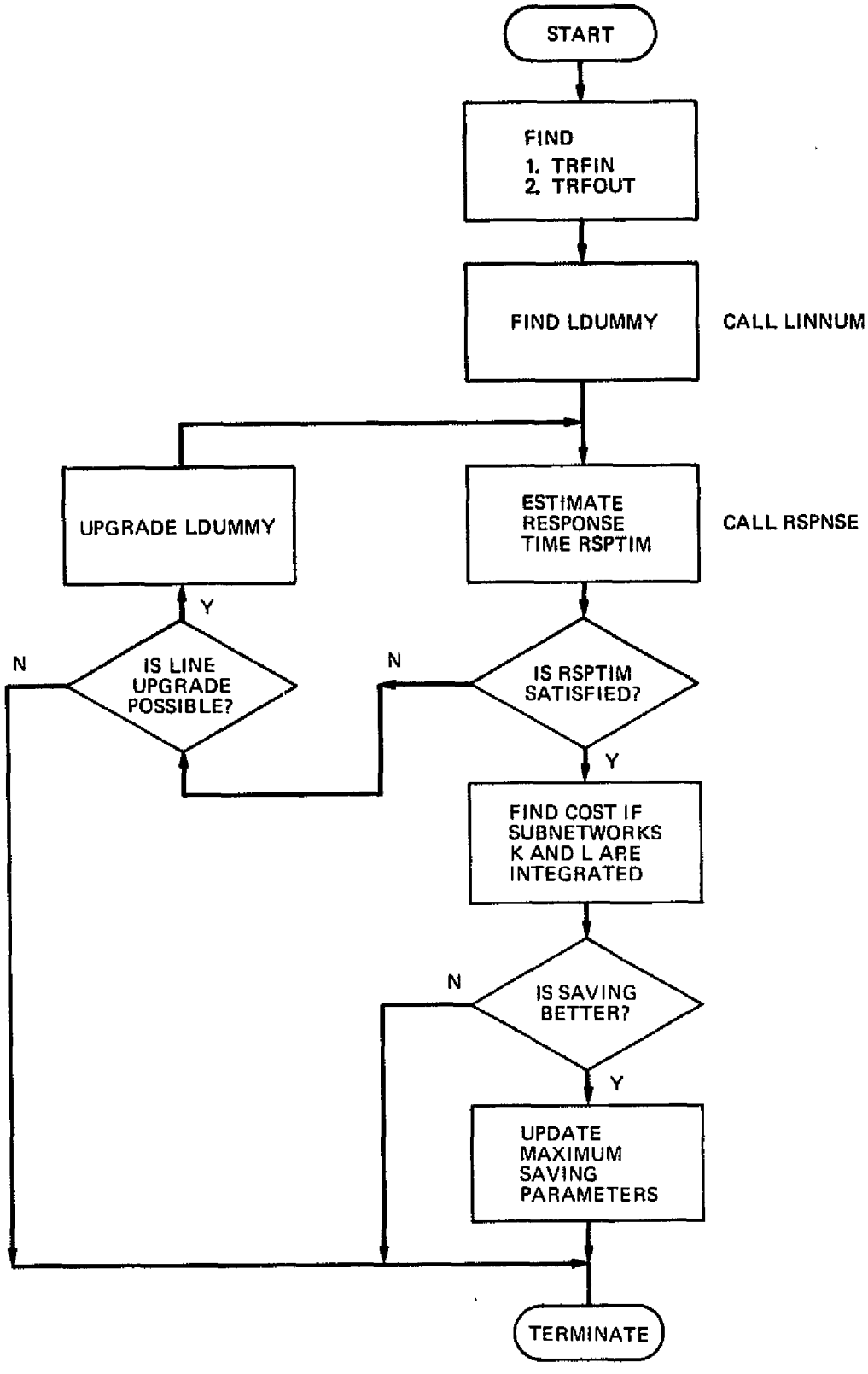

Figure 2-16. Flow Chart for Subroutine TRYLNK

2.4.6.4 Functions Performed by Subroutine RSPNSE. Figure 2-17 shows the flow chart of the subroutine RSPNSE. This subroutine calculates six items of delays: polling, message transmission time from a terminal to the central switches, input buffer queue time, service time, output buffer queue time, and returned message transmission time from the central switcher to the same terminal.

After summing up these delays as RSPTIM, this subroutine compares its value with the upper bound response time as set up by the user. It assigns 1 to IOK as an indication of satisfying response time requirement and returns.

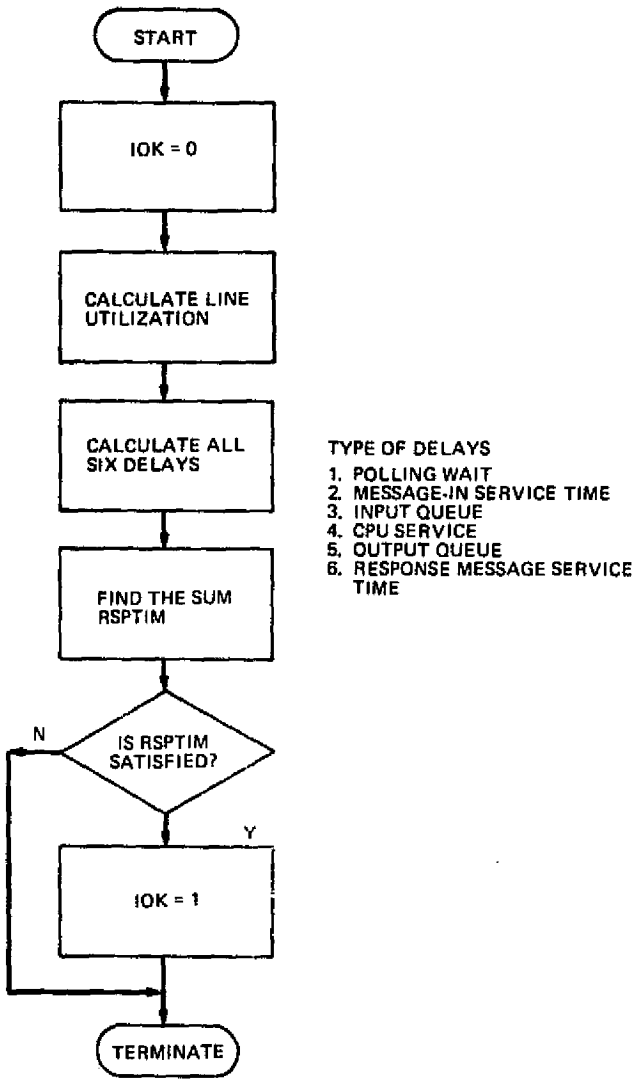

Figure 2-17. Flow Chart for Subroutine RSPNSE

2.4.6.5 Network Updates by Subroutine UPNETW. If there is a positive cost saving after trying all possible combinations for parameters K, KI, L, and M, subroutine UPNETW is called upon to perform the other function for each cycle of the network optimization process as described in Paragraph 2.4.6.1.

In the STACOM program, subroutine UPNETW performs the following main functions: (1) updating of network descriptions, (2) revision of relevant accounting data (such as the number of terminals on the new L sub-network, its average response time, and total traffic).

2.4.7 Formation of an Interregional Network

The interregional network is formed by erecting communication lines between the regional switching centers (RSCs). The initial network has a direct line between any two RSCs.

As shown in Figure 2-18, for each combination of two RSCs I and J, the maximum traffic in either direction is considered as the design traffic between these two RSCs. This is different from intraregional line selection because it is assumed that full duplex lines are to be used. The traffic matrix TRM contains traffic data between RSCs. With this information, line configuration LINEQU between RSCs I and J is obtained by calling subroutine LINNUM.

Cost of line configuration LINEQU is then estimated and added to the total cost.

2.4.8 Optimization of an Interregional Network

After the initial interregional network is completed, the program starts a line elimination process in order to obtain a cost-effective network.

Figure 2-19 shows the basic topological consideration involved in line elimination. In considering whether line I-J can be eliminated, the algorithm tries to divert I-J traffic to other lines with excess capacity, for example, over route 1-4-3. If there is no alternate route with enough excessive capacity to handle I-J traffic, the program begins adding capacity to alternate routes in order to accommodate the required traffic. It then estimates the cost saving under the proposed modifications.

The algorithm iterates the above described process for all combinations and records the best cost saving and the best line elimination. It then updates the network.

This cycle of searching for the best cost saving and updating the network repeats continuously until cost savings can no longer be realized.

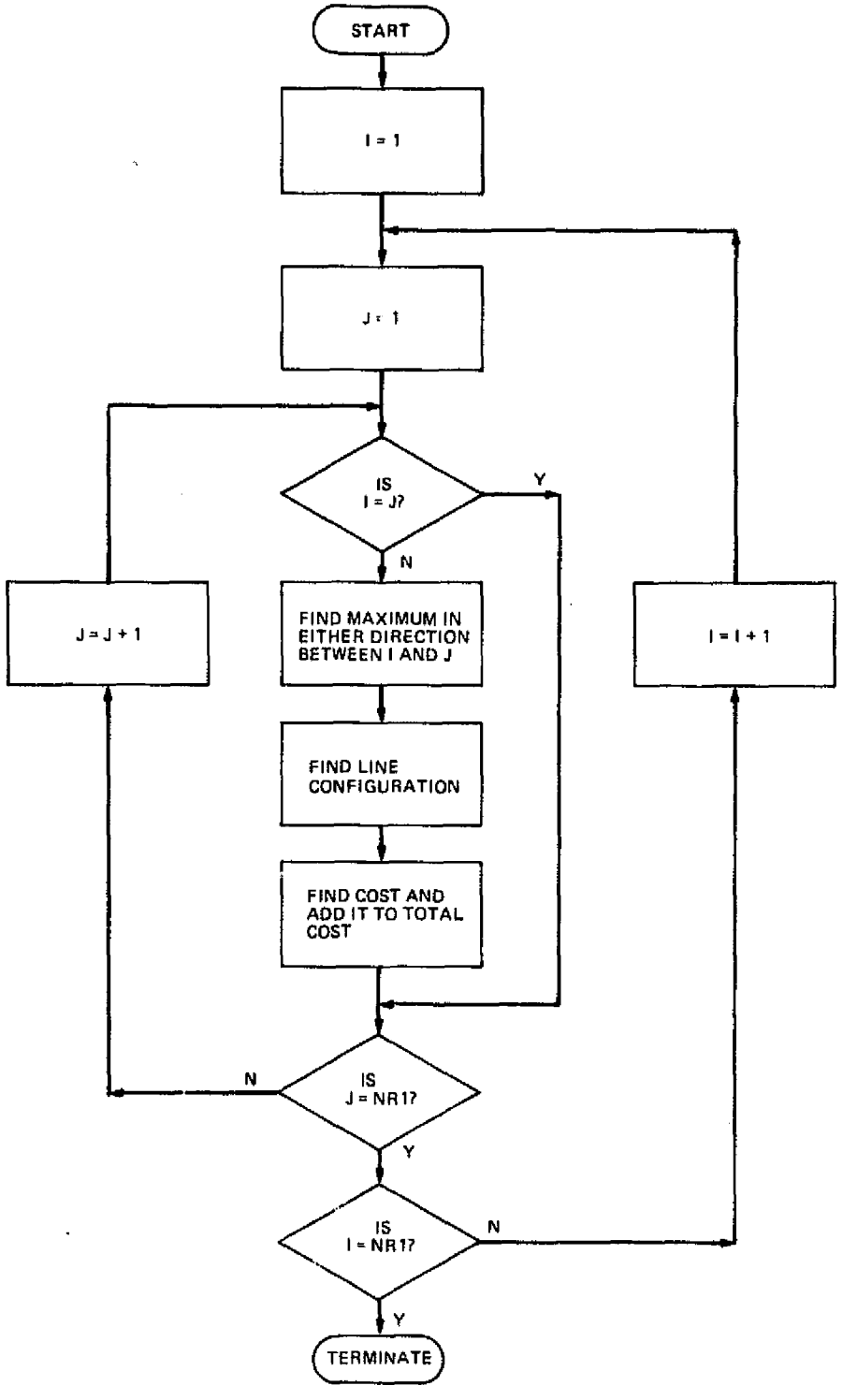

Figure 2-18. Flow Chart for Intraregional Line Selection

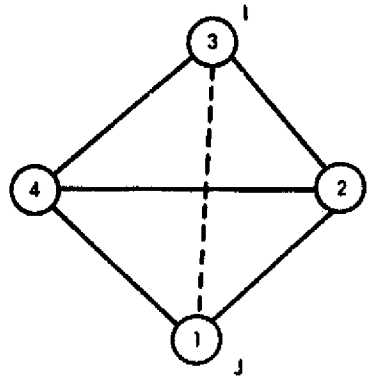

Figure 2-19. Basic Topology of Line Elimination

2.4.8.1 Interregion Network Optimization Logic Implemented. Figure 2-20 depicts the functional flow chart for the interregional network optimization as implemented in the STACOM program.

A parameter, I, is used to select one of the RSC nodes to be considered for line elimination. A test is then made on RSC I to insure that at least three links to other RSCs exist. If I has at least three links, another parameter, J, is used to select any other RSC node for trying to eliminate its link to I. J is tested to insure that it has three links to other RSCs and J is different from I. Another test is made to insure that I and J are connected to each other. If any of these conditions are not met, RSC node J + 1 is selected and these three tests are repeated.

If these conditions are met, a test is carried out to see if sufficient network connectivity will still be maintained if connection I-J is removed. Due to the consideration of availability, the program is designed in such a way that each RSC node will have at least two communication links to other RSCs and each RSC node will be connected to every other RSC node through no more than one intermediate node.

If the network connectivity requirement can be maintained with the removal of link I-J, the program searches for alternate routes with excess capacity in an effort to re-route the I-J traffic load without increasing network capacities. If all I-J traffic can be successfully diverted in this manner, the I-J link is eliminated and the network traffic matrix and costs are re-calculated; the process then begins anew.

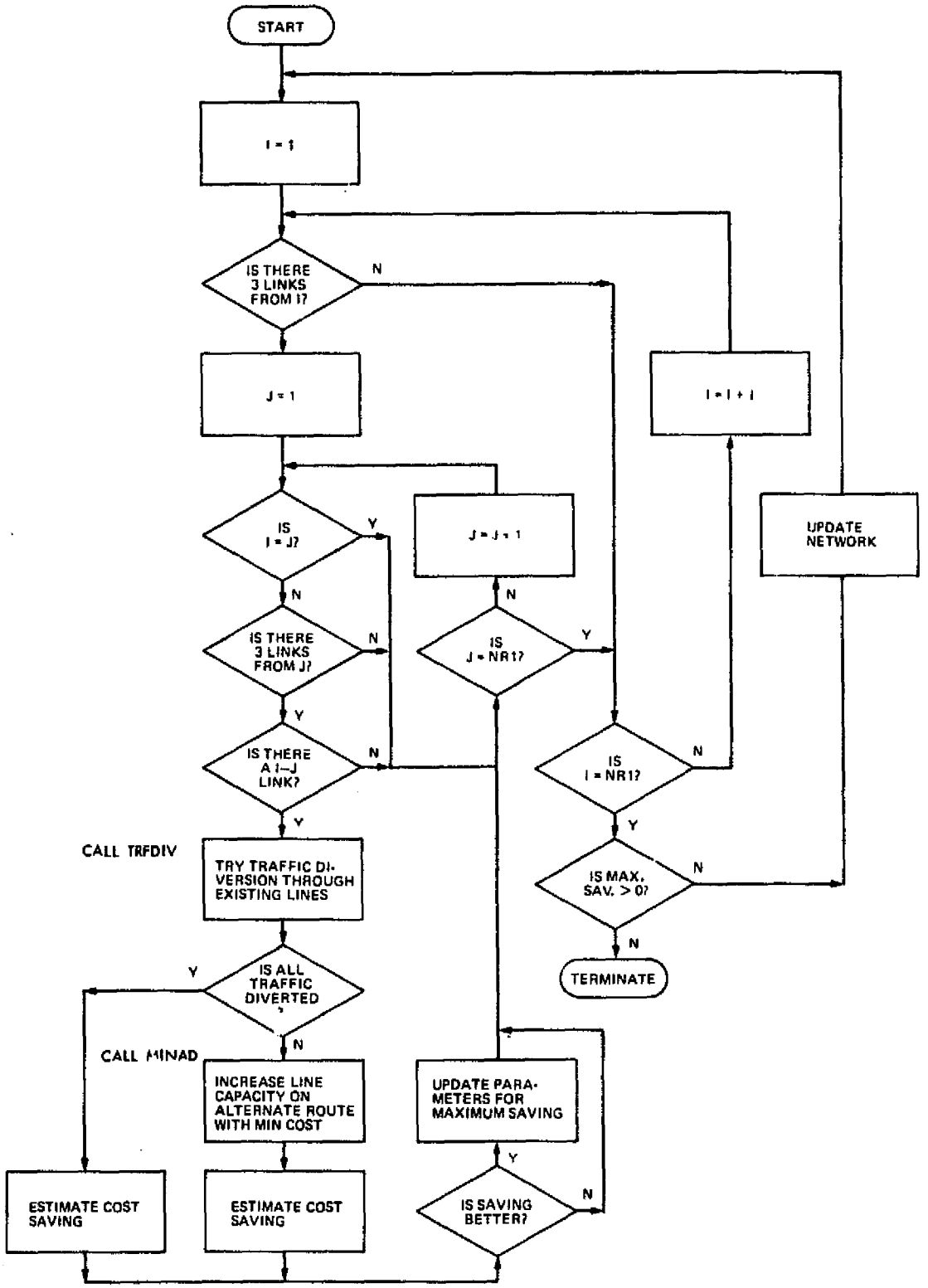

Figure 2-20. Flow Chart for Interregion Network Optimization

If all I-J traffic cannot be diverted through existing network routes with excess capacities, the capacity of the first available alternate route is increased to handle the remaining traffic. The cost saving is determined as equal to the original cost of the line removed minus the cost for the capacity increase. If the cost saving is an improvement over previous trials, line and traffic data are saved to reflect the up-to-date best modification of the network.

At the conclusion of each cycle, if the cost saving is positive, the line and traffic data associated with the best saving are used to eliminate the line, update the network, and recost the network.

The process is continually iterated for each updated network configuration until cost savings are no longer positive.

2.5 OUTPUT

The STACOM program gene[illegible]gular printer output and a CalComp plotter output. In addition, wh[illegible]e program is run as a demand job, run-status output will show up on the interactive terminal. This part of the printout provides information on the progress of the run.

Details of data contained in the regular printer output are given in Paragraph 2.5.1; Paragraph 2.5.2 describes the CalComp plot.

2.5.1 Printer

The printer output contains all the data resulting from the running of the STACOM program. The amount of printout data depends upon the number of system terminations operated and also upon the number of functions executed in each specific run.

Following is a list, in temporal order, of the data items which a run may produce.

2.5.1.1 Line Type and Transmission Line Characteristics. The first set of data are the line type and transmission line characteristics as used in the run. for each line type, the polling protocol data and modem turn-around time data, etc., are provided.

2.5.1.2 Message Characteristics. Message characteristics are the next set of data output from the program. They include average input message length, average output message length and overall average message length.

2.5.1.3 Preloading of System Terminations and Preselection of Regional Switcher Locations. If there are any preloadings of system terminations and/or pre-selections of switcher locations, this information will be provided in the printout. Otherwise, no data will be shown in this regard.

2.5.1.4 Traffic and Distance Tables. These are tables which show both traffic from/to all system terminations and distances between system terminations.

The first table gives the traffic data from each system termination to/from each data base; the next one gives the traffic data destined to and originating from each system termination. The last table shows the distance data between any two system terminations.

2.5.1.5 System Centroid and the Utilization Factor of the Central Switcher. The system centroid as designated by the user is printed next as a reminder. After this, the CPU utilization factor of the central switcher as calculated by the program is printed to indicate the load.

2.5.1.6 System Terminations in a Region and its Regional Switching Center. For each region, the program prints out the identification and name of each system termination in the region. These system terminations may have been pre-loaded or assigned to the region by the program. The program also prints out the location of the RSC for the region, which is either pre-assigned by the user or selected by the program.

2.5.1.7 Star Network and its Costs. After showing what system terminations are in the region, the program prints out the regional star networks and costs associated with each central link. It also provides summarized costs. Detailed descriptions for each central link are given below.

2.5.1.7.1 Line Configuration and Effective Utilization. The line configuration for each central link is printed as a column vector, which has the same number of line types used in the run. The effective line utilization is also printed to show the traffic load from the system termination.

2.5.1.7.2 Distance. The distance from the system termination to the regional switching center is printed.

2.5.1.7.3 Line Traffic and Effective Response Time. The amount of traffic from/to the system termination is printed before the effective line response time as calculated by the program is printed. The calculation is based on the line configuration and traffic as shown and should be better than the response time requirement.

2.5.1.7.4 Installation and Annual Recurring Costs. The installation and annual recurring costs for providing the central link are given in terms of chargeable items such as service terminal, modem, line and drop. Partial sums for the line are also printed. Finally, total installation and annual recurring costs for each chargeable item and for the overall star network are printed.

2.5.1.8 Final Optimized Network and its Costs. After performing optimizations on the star network, the program prints out descriptions for each multidrop line in the final optimized network. The following list shows the data items which may be printed.

2.5.1.8.1 Multidrop Line Configuration. Each multidrop line has an index, the beginning terminal and number of terminals on the line. The exact line configuration is printed as a column vector, with only one non-zero element. The content of that non-zero element must be one, due to the fact that multidropped terminals can only perform on one line.

2.5.1.8.2 Line Utilization, Mileage, Traffic, and Response Time. The line utilization, total mileage and incoming/outgoing traffic on each multidrop line are printed. The program next prints the average response time, which should be better than that required by design, to be expected by each user terminal on the line.

2.5.1.8.3 Installation and Annual Recurring Costs. The amount of installation and recurring costs are then listed in terms of chargeable items as explained in Section 2.5.1.7.4.

Finally, total installation and annual recurring costs for each chargeable item and for the overall network are printed.

2.5.1.9 Network Drawing. A network diagram in terms of tree-type relationship is last printed. It uses the system termination identification as nodal notation.

2.5.1.10 Initial Interregional Network. If formation and optimization of the interregion network is required, the program will perform these functions and print its initial and optimized network. For each pair of RSCs, the program prints out line names, configuration, utilization, and installation and recurring costs. Total network cost is also provided.

2.5.1.11 Optimized Interregional Network. The program prints out similar data for the final optimized interregional network after completing the network optimization.

2.5.2 CalComp Plot

A CalComp plot subroutine has been incorporated into the STACOM program for the purpose of providing a visual plot of each optimized regional network obtained by the optimization process. The subroutine converts each final optimized regional network into a two dimensional plot, utilizing the CalComp plotter. It should be noted that the CalComp plot is an optional product. If desired the user can command the STACOM program not to generate the plot.

2.6 SYSTEM CONFIGURATION

In this section, we will describe the basic computer system required to run the STACOM program.

2.6.1 Hardware

The following list describes the hardware units that should be part of the computer system on which the STACOM program is run.

2.6.1.1 Central Processing Unit. Due to the fact that the STACOM program is coded with the FORTRAN V language and compiled and mapped under the EXEC-8 operating system of the UNIVAC 1108 systems, a UNIVAC 1108 CPU or one equivalent to it is a prerequisite of the use of the STACOM program. When this type of CPU is not available, some conversion efforts on the STACOM program may be required.

2.6.1.2 Main Core Storage. Although the core size required by the STACOM program varies by parameter values assigned, it is generally true that 65K words would be a minimal requirement.

2.6.1.3 CalComp Pen Plotter. A CalComp pen plotter is required for the use of the STACOM program. If other types of CalComp plotters, e.g., CalComp Model 1675 are to be used, the plotting subroutine of the STACOM program needs to be revised.

2.6.1.4 Line Printer. A regular printer to receive FORTRAN output files is needed. It will print out all run results collected by file 100.

2.6.1.5 Demand Terminal. A demand terminal provides the user with an alternate way of running the STACOM program, although the program can be run as a batch job. With the demand terminal, a user can interactively perform the program execution.

SECTION 3

PROGRAM OPERATIONS

3.1 INTRODUCTION

This section is intended for use as a reference manual for the user, both to prepare input data and to operate the STACOM program. With this in mind, this section is devoted to an explanation of how input data are prepared, how the program is executed, and what the input/output of the program is to be.

3.2 ENVIRONMENT

3.2.1 Hardware

The following list describes the hardware units that should be part of the computer system on which the STACOM program is run.

3.2.1.1 Central Processing Unit (CPU). Because the STACOM program is coded with the FORTRAN language and compiled and mapped under the EXEC-8 operating system of the UNIVAC 1108 systems (see Paragraph 1.1), a UNIVAC 1108 CPU or one equivalent to it is a prerequisite for using the STACOM program. When this type of CPU is not available, some conversion effort on the STACOM program may be required.

3.2.1.2 Main Core Storage. Although the core size required by the STACOM program varies with the parameter values assigned, it is generally true that 65k words would be a minimal requirement.

3.2.1.3 CalComp Pen Plotter. A CalComp pen plotter is required for the use of the STACOM program. If other types of CalComp plotters, e.g., CalComp Model 1675, are to be used, the plotting subroutine of the STACOM program has to be revised.

3.2.1.4 Line Printer. A regular line printer to receive FORTRAN output files is needed. It is to print out all run results collected by file 100.

3.2.1.5 Demand Terminal. A demand terminal provides the user with an alternate way of running the STACOM program, although the program can be run as a batch job. With the demand terminal, a user can interactively perform the program execution.

3.2.2 Software

3.2.2.1 Programming Language. The STACOM Program is implemented with the FORTRAN V language of the UNIVAC system, compiled by the EXEC-8 FORTRAN Processor FOR, and mapped by the mapping processor MAP. Because of the inclusion of a plotting subroutine, the system library file LIB*PLOT$ is required during mapping.

An understanding of the FORTRAN V features is available in Reference 2.

3.2.2.2 Operating System. The EXEC-8 operating system of the UNIVAC 1108 computer system is used in the development of the STACOM program. As this operating system has been used for executing regular FORTRAN V programs this same operating system must be used for executing the current edition of the STACOM program.

The STACOM program has been designed so that all of the desired printer output will be dumped to file 100. Therefore, before executing the STACOM program, an alternate file 100 must be assigned. Otherwise, regular WRITE unit 6 will be the destination device; this will make it awkward when runs are performed via a demand terminal since most of the output from the program uses 132 characters per line.

Furthermore, an execution of the program will generate a punch-card image file. It is, therefore, recommended that a file be assigned to store the punch-card file, and that this later be directed to a CalComp plotter. An alternative is to have a command statement which requests the operating system to @SYM the output punch-card file to a CalComp pen plotter.

3.2.3 Functional Limitations

While the STACOM program has been designed and implemented with the intent that it be as widely applicable as possible, it does have certain limitations. Following is a list of functional limitations that exist in the program.

3.2.3.1 Program Size. Under the EXEC-8 operating system, the size for regular programs is limited to 65k words per program. Because of this, assignments of parameter values during the compilation stage are conditioned to this limit of the overall program size when mapped. Although it will be more convenient for later uses of the STACOM program if all of the parameters are assigned with maximum values within the limit of 65k words, this will increase the run cost. This is because of the core-time product charge.

3.2.3.2 Parameter Variables. The PARAMETER statement of the FORTRAN language is one of those commands which make the language a powerful tool in problem solving.

To accomplish the goal of making the STACOM program a widely usable tool for network design, it has been implemented with several parameter variables. For each compilation of the program, a set of values is assigned to the parameter variables. Therefore, any subsequent use of the STACOM program will be limited to cases where the actual values assigned to the variables are within the parameter values defined during compilation. Any run whose input data violates this rule will need modification of the parameter values of the program, recompilation, and remapping. For example, NP1 is a parameter variable which is used to make the number of system terminations allowed in a system a variable. A choice of NP1 as 105, for example, dictates that the STACOM program can only be used in systems where 105 or less system terminations are under consideration. Any run which has a number of system terminations greater than 105 will result in either an abnormal run termination or a normal run termination with unwanted output.

3.2.3.3 Response Time. The response time algorithm implemented in the program is based on the model (Reference 5). In applying this program to a given system, some consideration of the applicability of the response time algorithm is required. If the central switcher does not behave similar to this model the response time subroutine RSPNSE has to be revised and recompiled and the STACOM program has to be re-mapped.

3.2.3.4 CalComp Plot. The graphic output portion of the STACOM program has been implemented with the plotting routines designed for the CalComp pen plotter. If other types of CalComp plotters, e.g., CalComp Model 1675, are to be used, the plotting subroutine of this program needs to be revised and recompiled and the STACOM program has to be re-mapped.

3.3 RUN DESCRIPTION

3.3.1 Initialization and Setup

When the STACOM program is executed from an 80-character/line demand terminal, an alternate file, 100, to be used as a printer output file, must be defined. Otherwise, all printout data will be directed to the terminal which will produce interleaving output. The statement @ASG,UP 100 defines the alternate file.

In addition to the redirection of output file destination, the user has to direct the punch-card file to a proper unit for a CalComp plotter. As an example, the statement @SYM,P PUNCH$,,G9PLTF will direct the punch-card images to a CalComp plotter designated with G9PLTF.

The preparation of input data can be best described by referring to Table 3-1 which shows all of the data items with their required formats. The table is self-explanatory, but some of the data items deserve additional description.

Because the exact number of data bases varies from State to State, the format for item 5 allows a maximum of 5 data bases wherein the last three pairs of entries must be given on a separate card.

The notation $\lceil X \rceil$ for item 8 indicates that the exact value is equal to the next integer which is greater than or equal to X. The format for line recurring costs has been designed with the assumption that both linear and nonlinear functions will be used in tariffs for line services. Because of this, the STACOM program provides options for either scheme. When a cost function is nonlinear, it is assumed to be stepwise and only eight steps are allowed. If eight are not enough, the program has to be updated.

The amount of input data for item 15 varies from one run to another. The program has default values of zeros for all entries in IACTN (NR1,2). A zero for the first element indicates the acceptance of additional system terminations into a region when it is a preloaded region; a zero for the second element indicates that the optimization process for the region is not needed.

When a user decides either to exclude the addition of other system terminations into a preloaded region, or to request an optimization process performed upon a specific region he must so inform the STACOM program by adding data cards with two integer numbers. The first number gives the region index; the second number indicates the action: 1 indicates insertion exclusion, and 2 indicates optimization. When all requests for actions have been made, a card with two zeroes is required to indicate that fact.

Finally, item 20 provides the tool for a user to preload system terminations to certain regions, and/or preselect the regional switching center. Three numbers are needed for each action. The first number, called NCODE, directs the specified action: 1 assigns a system termination to a specific region; 2 assigns a system termination as the RSC for a specific region. The second number, called NSTATE, gives the identification number for a system termination to be assigned to a region or to be selected as an RSC. The third number, called NREGQ, designates the region to be acted upon. When the first number has a value of three, the assignment selection activity terminates.

3.3.2 Run Options

As indicated in Table 3-1, there are several independent variables provided only at the time of execution. This provides additional capabilities to the STACOM program.

Table 3-1. Formats for Input Data

Item No.	Item Description	Names of Internal Variables/Arrays	Number of Cards Needed	Formats
1.	No. of regions under consideration	NR1	1	(I3)
2.	No. of system terminations, no. of data bases, and no. of distinctive cities under consideration.	N1, N7, NCITY	1	(3I5)
3.	IDs for data bases	NBASE(N7)	1	(3(1X,A4))
4.	V-H Coordinates for cities	IVERT(NCITY), IHORZN(NCITY)	NCITY	(33X,I5,2X,I5)
5.	ID, name, city index, additional no. of terminals and traffic to/from each data base for each system termination.	INDXPT(N1),NAMEST(H,N1),IADD(N1) MAPADR(N1),TRAFD(N1,2,N7)	a. N1 if $N7 \leq 2$ b. 2N1 if $N7 > 2$	(A4,1X,3A6,A4, I2,I4,4F10.2/ 6F10.2
6.	No. of rate structures	N2	1	(I3)
7.	Rate application matrix	IRATEJ(N2,N2)	N2	(10I2)
8.	Traffic density index and applicable rate structure for each city	IRAND(NCITY,2)	$\lceil NCITY/40 \rceil$	(80I1)
9.	No. of applicable line types	N3	1	(I3)

Table 3-1. Formats for Input Data
(Continuation 1)

Item No.	Item Description	Names of Internal Variables/Arrays	Number of Cards Needed	Formats
10.	Name, capacity, utilization limit, usage and duplexing mode for each line	LINAME(N3), LINCAP(N3), LINMIX(N3), IDUPLX(N3)	N3	(A6,1X,I6,1X, F3.2,2(1X,I1))
11.	No. of chargeable items	N4	1	(I3)
12.	Names of chargeable items	NAMEHW(N4)	1	(10(A6,1X))
13.	Installation and recurring costs for chargeable items WRT rate structure, traffic density and duplexing mode for each line type	AINSTC(N2,N3,N4,3,2,2), RECRC (N2,N3,N4,3,2,2)	2xN2xN3xN4x3x2	(2F9.2)
14.	Linear installation and recurring costs for lines WRT rate structure type, density, and duplex mode	IFLAG(N2,N3),ANSTLN (N2,N3,3,2,2), RECRLN (N2,N3,3,2,16)	a. N2x(2+N3x3x2) b. 2xN2(2+N3x 3x2) if non linear	a. (4F9.2/I1/10F8.3) b. (4F9.2/I1/10F8.3/ 10F8.3)
15.	Action indices for regions	NREG,NCODE for IACTN (NR1,2)	Variable	(2I2)

Table 3-1. Formats for Input Data
(Continuation 2)

Item No.	Item Description	Names of Internal Variables/Arrays	Number of Cards Needed	Formats
16.	No. of polling characters no. of NAK characters, no. of polling overhead characters, no of NAK overhead characters, message overhead characters, Modem turnaround time, and other delay for each line type	NPL(N3), NAK(N3), NPLOH (N3) NAKOH(N3), MOH (N3) TAMDM(N3), TAPD (N3)	N3	(5I4,2F7.5)
17.	No. of message types	NTYP	1	(I4)
18.	Message name, input message length, output message length, input percentage and output percentage with priority 1 and 2	MSGNAM (NTYP), MSLIN (NTYP) MSGOVT(NTYP), RATIOI(NTYP,2) RATIO(NTYP,2)	NTYP	(A6,2(2I4,2F6.3))
19.	Average CPU service time per transaction	CPUAVG	1	(F7.4)
20.	Preloading system terminations and/or preselecting regional centers	NCODE, NSTATE, NREGQ	Variable	(I1,1X,A4,A5)
21.	System Ce[illegible]	NSCC1	1	(A4)

Table 3-1. Formats for Input Data
(Continuation 3)

Item No.	Item Description	Names of Internal Variables/Arrays	Number of Cards Needed	Formats
22.	Total no. of messages per second and no. of requests made at the central switcher	XSAC, NREQSW	1	(F8.5,I3)
23.	Limit on no. of terminals on a multi-dropped line, response time requirement and no. of CPU processors for computer	NTERMS, TIMREQ, MPROC	1	(I3,F5.2,I2)
24.	Plot request	MPLOT	1	(I3)

Following is a list of run options for the STACOM program.

(1) The user can preload system terminations to regions and/or preselect regional switching centers.

(2) The user can select certain regions for which the optimization process will be performed.

(3) Type of lines and chargeable items can be selectively chosen.

(4) The user can put a limit on the number of terminals on a multidrop line as described and can limit the average terminal response time.

(5) The number of central processor units in the central computer system can be 1, 2, or 4.

(6) The CalComp plot can be skipped.

3.3.3 Control Instruction and Sequences

3.3.3.1 Starting a Run.

3.3.3.1.1 Batch Mode. Following is a list of control statements required when running the STACOM program as a batch run:

```
@RUN run-ID, account-no., project-ID, SUP-time, pages/cards
@ASG,UP 100
@SYM,P PUNCH$,,plotter-ID
@XQT file.STACOM
      (DATA)
@BRKPT 100
@FREE 100
@SYM 100,,printer-ID
@FIN
```

The RUN card gives the following information: designated run-ID, user's account number, project-ID, expected SUP-time usage and limited number of printer pages, and number of cards which may be generated from the run. Plotter-ID gives the logical ID of the CalComp pen plotter and file is the file which contains the absolute element of the STACOM program. Printer-ID gives the logical ID of the regular printer. DATA as shown is the input data described in Paragraph 3.2.1; the user should arrange the data in the same order. When all of these data items are in order and ready, the deck can be submitted to the operator at the computer site for processing.

3.3.3.1.2 Demand Mode. If program execution is to be performed via a demand terminal, the user can converse interactively with the program. The user may also run the program as a batch job by having all input data prepared and added after the @XQT statement.

Under the conversation mode, the user acts as a respondent who answers the requests for data made by the program. This mode of operation provides the user with some understanding of program progress A user can very often terminate a run before a complete set of input data is given. This is possible because the user has some knowledge of the progress being made. This capability can prevent the user from an unnecessary waste of time. For example, if a run encounters a system which has more oversized distance data than allowed, a message from the program will be printed out on the terminal. The user will be alarmed by this fact and may decide to terminate the program run.

3.3.3.2 Run Progression. After receiving all of the required data, the program will perform all functions as designed and requested by the user whether a batch or a demand job has been executed. The program will perform formation of regions, selection of regional switching centers, formation of a regional star network and its optimization if requested, and finally, formation and optimization of an interregional network. All of the desired output data will go to the alternate file, 100.

3.3.3.3 Normal Termination. When a STACOM program run proceeds successfully and terminates normally, the normal file unit 6 will contain two lines of messages for each successful regional network optimization. These two lines are:

(1) TRYLNK has been accessed for xxxxx times.

(2) UPNETW has been accessed for xxxxx times.

The first message indicates the number of subroutine calls to TRYLNK that have been made during the process of searching for a better network. The second message indicates the number of optimization cycles which the run has gone through before the optimization process stops. After a normal termination, the user can direct the output file 100 to a printer device and the punch card file to a CalComp pen plotter if file PUNCH$ has been directed to an alternate file.

3.3.3.4 Aborting and Recovering a Run. When a run encounters trouble resulting from incorrect input data, the user can use the normal aborting procedure to terminate its execution if it is a demand job. A statement of @@x after interrupting the line communication by pressing the BREAK key will terminate a program execution at any time. On the other hand, the EXEC-8 may abort a program execution when certain serious violations occur during its execution, e.g., number of punch cards exceeding the limit on the run card.

If a program run has been interrupted due to system outage, no recovery of the run is possible.

3.3.4 Program Listing

A listing of the STACOM program elements is given in Appendix A.

3.4 SAMPLE RUN

To illustrate how STACOM can be run, a sample run is provided in the following subsections along with detailed explanations.

3.4.1 Run Stream

The following list of control statements shows the typical batch mode run stream used to execute the STACOM program.

```
@RUN JJL,J6G3YL,51928,20,90/1000
@ASG,UP 100
@SYM,P PUNCH$,,G9PLTF
@XQT LEE.STACOM
@ADD LEE.DATA
@BRKPT 100
@FREE 100
@SYM,U 100,,T4
@FIN
```

The first control statement is a run request which specifies its run ID as JJL, identifies its account number as J6G3YL, assigns project ID as 51928, requests a maximum of 20 minutes of SUP-time and finally asks for a limit of 90 printer pages and 1,000 punch cards. The limits on SUP-time, number of printer pages and number of punch cards deserve some attention when making a run. If there is an underestimate in any of these three limits, the run may abort due to insufficient resource assignment.

The second statement is used to assign an alternate FORTRAN output file as required by the program. It is intended to be a one-day file.

Statement 3 requests the system to direct the punch card image file to the CalComp pen plotter with the name G9PLTF.

Statement 4 is a command for executing the STACOM program which is designated with the element name STACOM in file LEE.

The next statement asks the operating system to use the content of element DATA as its input data.

Statements 6 and 7 are used to close file 100 and catalog it for later use.

Statement 8 asks the operating system to send the printer file 100 to an on-site low speed printer with ID T4. The U option retains the FORTRAN print file after a copy is printed

The last statement terminates the run with a request for a detailed description of run charges and run history. The number of pages in the print file and the number of punch-card images are part of the data given by the accounting subsystem when a run terminates.

When the same program is to be executed via a demand terminal, the content of element LEE.DATA can be divided into several individual elements plus certain key-in control statements. Essentially, however, the same amount of input data must be provided to succeed in running the program.

3.4.2 Input

As a specific example, Table 3-2 gives the list of data which have been used in analyzing the South Plains portion of Texas under the Council-of-Governments structure.

Encircled numbers have been written on the left hand side so that Table 3-2 and Table 3-1 are made compatible. Data associated with each encircled number in Table 3-2 corresponds to the data item with the same index in Table 3-1. Items 1 and 2 indicate that the run is concerned with 1 region case, a total of 25 system terminations, 4 data bases, and a total of 358 distinctive cities. Items 3 gives the IDs for locations of those four data bases, and item 4 lists the names of all 358 cities which have distinctive V-H coordinates (four digit integers). Since the number of data bases is greater than 2, two input cards are needed for each system termination; therefore a total of 50 cards are needed as listed under item 5. Since there is only one rate structure, one card is needed for rate application matrix (see items 6 and 7).

Item 8 shows the traffic density and rate application table for which 9 cards are required. Items 9 and 10 indicate that only 3 type of lines (with rates 1200 bps, 2400 bps, and 4800 bps) are considered; 0.7 is the line utilization limit for all of them. Three chargeable items are applicable as shown in items 11 and 12. Item 13 is somewhat complicated, the following explanation should enable the reader to understand it. These 108 data cards are divided into 3 groups with the first group given to the first line type, i.e., 1200 bps, and so on.

Table 3-2. Input Data for the Example Run

```
51928*STACOM(0).INPUT/0777
  1 (1)-->1
  2  (2)-->25    4  358
  3 (3)-->AAAA DDDD SSSS HHHH
  4  (4)->PALESTINE          ANDERSON    8558   3750
  5       ANDREWS            ANDREWS     8897   4993
  6       LUFKIN             ANGELINA    8575   3561
  7       ROCKPORT           ARANSAS     9405   3694
  8       ARCHER CITY        ARCHER      8396   4410
  9       JOURDANTON         ATASCOSA    9332   4032
 10       BELLVILLE          AUSTIN      8964   3710
 11       MULESHOE           BAILEY      8518   5157
 12       SEYMOUR            BAYLOR      8437   4518
 13       BEEVILLE           BEE         9378   3850
 14       BELTON             BELL        8827   4010
 15       FORT HOOD          BELL        8832   4070
 16       HARKER HEIGHTS     BELL        8832   4063
 17       KILLEEN            BELL        8832   4063
 18       NOLANVILLE         BELL        8832   4038
 19       TEMPLE             BELL        8812   3992
 20       ALAMO HEIGHTS      BEXAR       9225   4062
 21       FT SAM HOUSTON     BEXAR       9225   4062
 22       LEON VALLEY        BEXAR       9223   4092
 23       SAN ANTONIO        BEXAR       9225   4062
 24       UNIVERSAL CITY     BEXAR       9187   4037
 25       CLIFTON            BOSQUE      8690   4089
 26       MERIDIAN           BOSQUE      8668   4112
 27       TEXARKANA          BOWIE       8111   3626
 28       ALVIN              BRAZORIA    8996   3488
 29       ANGLETON           BRAZORIA    9059   3499
 30       CLUTE              BRAZORIA    9081   3487
 31       FREEPORT           BRAZORIA    9096   3466
 32       LAKE JACKSON       BRAZORIA    9081   3487
 33       PEARLAND           BRAZORIA    8970   3506
 34       BRYAN              BRAZOS      8827   3788
 35       COLLEGE STATION    BRAZOS      8827   3788
 36       ALPINE             BREWSTER    9364   5057
 37       FALFURRIAS         BROOKS      9645   3827
 38       BROWNWOOD          BROWN       8797   4327
 39       CALDWELL           BURLESON    8880   3834
 40       PORT LAVACA        CALHOUN     9258   3665
 41       BROWNSVILLE        CAMERON     9861   3606
 42       HARLINGEN          CAMERON     9820   3663
 43       PORT ISABEL        CAMERON     9807   3565
 44       SAN BENITO         CAMERON     9826   3648
 45       LINDEN             CASS        8217   3643
 46       DIMMIT             CASTRO      8427   5109
 47       ANAHUAC            CHAMBERS    8884   3418
 48       JACKSONVILLE       CHEROKEE    8492   3709
 49       CHILDRESS          CHILDRESS   8328   4743
 50       MORTON             COCHRAN     8622   5129
 51       ROBERT LEE         COKE        8857   4603
 52       COLEMAN            COLEMAN     8804   4413
 53       FRISCO             COLLIN      8364   4069
 54       MCKINNEY           COLLIN      8340   4038
 55       PLANO              COLLIN      8383   4037
 56       WELLINGTON         COLLNGSWH   8240   4776
```

Table 3-2. Input Data for the Example Run (Continuation 1)

57	COLUMBUS	COLORADO	9032	3740
58	NEW BRAUNFELS	COMAL	9145	4018
59	COMANCHE	COMANCHE	8735	4275
60	GAINESVILLE	COOKE	8289	4162
61	COPPERAS COVE	CORYELL	8844	4092
62	GATESVILLE	CORYELL	8771	4089
63	CRANE	CRANE	9073	4896
64	OZONA	CROCKETT	9144	4642
65	DALHART	DALLAM	8129	5249
66	ADDISON	DALLAS	8404	4048
67	CEDAR HILL	DALLAS	8485	4047
68	DALLAS	DALLAS	8436	4034
69	DESOTO	DALLAS	8478	4030
70	DUNCANVILLE	DALLAS	8469	4044
71	FARMERS BRANCH	DALLAS	8414	4062
72	GARLAND	DALLAS	8400	4018
73	GRAND PRAIRIE	DALLAS	8458	4066
74	HIGHLAND PARK	DALLAS	8436	4034
75	IRVING	DALLAS	8440	4064
76	LANCASTER	DALLAS	8470	4013
77	MESQUITE	DALLAS	8426	4000
78	RICHARDSON	DALLAS	8399	4035
79	SEAGOVILLE	DALLAS	8447	3980
80	UNIVERSITY PARK	DALLAS	8436	4034
81	LAMESA	DAWSON	8779	4919
82	HEREFORD	DEAF SMTH	8378	5143
83	DENTON	DENTON	8372	4127
84	LEWISVILLE	DENTON	8398	4089
85	CUERO	DEWITT	9209	3823
86	SPUR	DICKENS	8560	4784
87	SAN DIEGO	DUVAL	9542	3888
88	EASTLAND	EASTLAND	8649	4352
89	ODESSA	ECTOR	8982	4930
90	ENNIS	ELLIS	8514	3970
91	WAXAHACHIE	ELLIS	8517	4011
92	EL PASO	EL PASO	9231	5655
93	STEPHENVILLE	ERATH	8645	4232
94	MARLIN	FALLS	8739	3931
95	BONHAM	FANNIN	8234	3996
96	ROBY	FISHER	8679	4646
97	FLOYDADA	FLOYD	8486	4902
98	FAIRFIELD	FREESTONE	8602	3839
99	PEARSALL	FRIO	9374	4129
100	RICHMOND	FT BEND	9009	3598
101	ROSENBERG	FT BEND	9009	3598
102	SEMINOLE	GAINES	8822	5040
103	FRIENDSWOOD	GALVESTON	8969	3489
104	GALVESTON	GALVESTON	8985	3397
105	HITCHCOCK	GALVESTON	8992	3441
106	LA MARQUE	GALVESTON	8975	3424
107	LEAGUE CITY	GALVESTON	8967	3468
108	TEXAS CITY	GALVESTON	8975	3424
109	POST	GARZA	8650	4854
110	FREDERICKSBURG	GILLESPIE	9079	4196
111	GOLIAD	GOLIAD	9301	3807
112	GONZALES	GONZALES	9137	3884
113	PAMPA	GRAY	8148	4952

Table 3-2. Input Data for the Example Run (Continuation 2)

114	DENISON	GRAYSON	8225	4069
115	SHERMAN	GRAYSON	8253	4072
116	GLADEWATER	GREGG	8354	3698
117	KILGORE	GREGG	8379	3674
118	LONGVIEW	GREGG	8348	3660
119	NAVASOTA	GRIMES	8865	3715
120	SEGUIN	GUADALUPE	9161	3981
121	PLAINVIEW	HALE	8465	4981
122	HAMILTON	HAMILTON	8744	4177
123	SPEARMAN	HANSFORD	8026	5037
124	QUANAH	HARDEMAN	8324	4654
125	KOUNTZE	HARDIN	8735	3405
126	SILSBEE	HARDIN	8730	3380
127	BAYTOWN	HARRIS	8916	3466
128	BELLAIRE	HARRIS	8938	3536
129	DEER PARK	HARRIS	8929	3491
130	GALENA PARK	HARRIS	8938	3536
131	HOUSTON	HARRIS	8938	3536
132	HUMBLE	HARRIS	8881	3540
133	JACINTO CITY	HARRIS	8938	3536
134	JERSEY VILLAGE	HARRIS	8925	3581
135	KATY	HARRIS	8965	3618
136	LA PORTE	HARRIS	8829	3470
137	PASADENA	HARRIS	8938	3536
138	SEABROOK	HARRIS	8945	3462
139	SOUTH HOUSTON	HARRIS	8938	3536
140	SOUTHSIDE PLACE	HARRIS	8938	3536
141	SPRING VALLEY	HARRIS	8938	3536
142	TOMBALL	HARRIS	8889	3609
143	VILLAGE	HARRIS	8938	3536
144	WEBSTER	HARRIS	8967	3468
145	WEST UNIV PL	HARRIS	8938	3536
146	MARSHALL	HARRSN	8311	3602
147	HASKELL	HASKELL	8555	4567
148	SAN MARCOS	HAYS	9096	4001
149	CANADIAN	HEMPHILL	8036	4882
150	ATHENS	HENDERSON	8484	3826
151	DONNA	HIDALGO	9849	3728
152	EDINBURG	HIDALGO	9830	3758
153	HIDALGO	HIDALGO	9856	3764
154	MCALLEN	HIDALGO	9856	3764
155	MERCEDES	HIDALGO	9845	3701
156	MISSION	HIDALGO	9861	3781
157	PHARR	HIDALGO	9854	3754
158	WESLACO	HIDALGO	9847	3716
159	HILLSBORO	HILL	8612	4026
160	LEVELLAND	HOCKLEY	8629	5053
161	SULPHUR SPRINGS	HOPKINS	8281	3861
162	BIG SPRING	HOWARD	8847	4800
163	COMMERCE	HUNT	8280	3921
164	GREENVILLE	HUNT	8317	3949
165	BORGER	HUTCHNSON	8146	5033
166	JACKSBORO	JACK	8442	4303
167	EDNA	JACKSON	9186	3698
168	BEAUMONT	JEFFERSON	8777	3344
169	NEDERLAND	JEFFERSON	8789	3316
170	PORT ARTHUR	JEFFERSON	8806	3298

Table 3-2. Input Data for the Example Run (Continuation 3)

171	ALICE	JIM WELLS	9533	3855
172	BURLESON	JOHNSON	8522	4103
173	CLEBURNE	JOHNSON	8563	4102
174	ANSON	JONES	8647	4563
175	STAMFORD	JONES	8603	4562
176	KARNES CITY	KARNES	9294	3915
177	KAUFMAN	KAUFMAN	8442	3936
178	TERRELL	KAUFMAN	8410	3943
179	BOERNE	KENDALL	9168	4133
180	JAYTON	KENT	8589	4718
181	KERRVILLE	KERR	9143	4226
182	JUNCTION	KIMBLE	9097	4373
183	KINGSVILLE	KLEBERG	9566	3801
184	BENJAMIN	KNOX	8472	4609
185	PARIS	LAMAR	8173	3897
186	LITTLEFIELD	LAMB	8558	5069
187	OLTON	LAMB	8490	5054
188	LAMPASAS	LAMPASAS	8875	4137
189	HALLETTSVILLE	LAVACA	9114	3789
190	YOAKUM	LAVACA	9157	3814
191	CENTERVILLE	LEON	8682	3768
192	CLEVELAND	LIBERTY	8801	3540
193	LIBERTY	LIBERTY	8835	3463
194	MEXIA	LIMESTONE	8635	3889
195	GEORGE WEST	LIVE OAK	9419	3910
196	LUBBOCK	LUBBOCK	8598	4962
197	SLATON	LUBBOCK	8616	4916
198	TAHOKA	LYNN	8680	4924
199	MADISONVILLE	MADISON	8740	3733
200	JEFFERSON	MARION	8267	3618
201	BAY CITY	MATAGORDA	9135	3578
202	EAGLE PASS	MAVERICK	9505	4370
203	BRADY	MCCULLOCH	8938	4344
204	BELLMEAD	MCLENNAN	8706	3993
205	BEVERLY HILLS	MCLENNAN	8706	3993
206	WACO	MCLENNAN	8706	3993
207	WOODWAY	MCLENNAN	8706	3993
208	HONDO	MEDINA	9285	4174
209	MENARD	MENARD	9011	4407
210	MIDLAND	MIDLAND	8934	4888
211	CAMERON	MILAM	8835	3910
212	ROCKDALE	MILAM	8877	3898
213	COLORADO CITY	MITCHELL	8781	4706
214	BOWIE	MONTAGUE	8351	4275
215	MONTAGUE	MONTAGUE	8323	4261
216	CONROE	MONTGOMRY	8832	3600
217	DUMAS	MOORE	8141	5144
218	DAINGERFIELD	MORRIS	8240	3704
219	NACOGDOCHES	NACOGDCHS	8515	3569
220	CORSICANA	NAVARRO	8553	3921
221	SWEETWATER	NOLAN	8737	4632
222	CORPUS CHRISTI	NUECES	9475	3739
223	ROBSTOWN	NUECES	9496	3786
224	PERRYTON	OCHILTREE	7962	4987
225	VEGA	OLDHAM	8292	5177
226	ORANGE	ORANGE	8746	3281
227	MINERAL WELLS	PARKER	8520	4261

Table 3-2. Input Data for the Example Run (Continuation 4)

228	CARTHAGE	PANOLA	8385	3564
229	WEATHERFORD	PARKER	8508	4206
230	FARWELL	PARMER	8503	5221
231	FRIONA	PARMER	8432	5185
232	FORT STOCKTON	PECOS	9207	4954
233	AMARILLO	POTTER	8266	5076
234	CANYON	RANDALL	8317	5075
235	CLARKSVILLE	RED RIVER	8147	3809
236	PECOS	REEVES	9136	5101
237	BIG LAKE	REGAN	9062	4723
238	HEARNE	ROBERTSON	8802	3846
239	ROCKWALL	ROCKWALL	8384	3989
240	BALLINGER	RUNNELS	8855	4498
241	HENDERSON	RUSK	8420	3640
242	ARANSAS PASS	SAN PTRCO	9437	3700
243	GREGORY	SAN PTRCO	9455	3731
244	INGLESIDE	SAN PTRCO	9447	3711
245	PORTLAND	SAN PTRCO	9455	3731
246	SINTON	SAN PTRCO	9436	3777
247	ELDORADO	SCHLEICHR	9076	4547
248	SNYDER	SCURRY	8718	4737
249	STRATFORD	SHERMAN	8049	5194
250	TYLER	SMITH	8417	3744
251	BRECKENRIDGE	STEPHENS	8582	4394
252	STERLING CITY	STERLING	8900	4686
253	ASPERMONT	STONEWALL	8589	4650
254	TULIA	SWISHER	8397	5016
255	ARLINGTON	TARRANT	8472	4085
256	BEDFORD	TARRANT	8447	4092
257	COLLEYVILLE	TARRANT	8447	4117
258	CROWLEY	TARRANT	8518	4118
259	EULESS	TARRANT	8447	4092
260	FORREST HILL	TARRANT	8479	4122
261	FORT WORTH	TARRANT	8479	4122
262	GRAPEVINE	TARRANT	8425	4094
263	HALTOM CITY	TARRANT	8479	4122
264	HURST	TARRANT	8447	4117
265	LAKE WORTH	TARRANT	8471	4158
266	NO RICHLAND HLS	TARRANT	8447	4117
267	RICHLAND HILLS	TARRANT	8479	4122
268	SOUTHLAKE	TARRANT	8425	4094
269	WHITE SETTLMNT	TARRANT	8485	4153
270	ABILENE	TAYLOR	8698	4513
271	SANDERSON	TERRELL	9333	4816
272	BROWNFIELD	TERRY	8705	5007
273	MT PLEASANT	TITUS	8234	3755
274	SAN ANGELO	TOM GREEN	8944	4563
275	AUSTIN	TRAVIS	9005	3996
276	GILMER	UPSHUR	8317	3716
277	RANKIN	UPTON	9084	4811
278	UVALDE	UVALDE	9357	4279
279	DEL RIO	VAL VERDE	9399	4490
280	CANTON	VAN ZANDT	8414	3858
281	VICTORIA	VICTORIA	9245	3748
282	HUNTSVILLE	WALKER	8758	3652
283	HEMPSTEAD	WALLER	8923	3691
284	MONAHANS	WARD	9066	5005

Table 3-2. Input Data for the Example Run (Continuation 5)

285	BRENHAM	WASHINGTN	8932	3752
286	LAREDO	WEBB	9681	4099
287	PIERCE	WHARTON	9115	3649
288	WHARTON	WHARTON	9078	3630
289	SHAMROCK	WHEELER	8170	4808
290	BURKBURNETT	WICHITA	8290	4440
291	WICHITA FALLS	WICHITA	8326	4413
292	VERNON	WILBARGER	8326	4567
293	RAYMONDVILLE	WILLACY	9768	3703
294	FLORESVILLE	WILSON	9261	3979
295	KERMIT	WINKLER	9024	5060
296	DECATUR	WISE	8399	4205
297	WINNSBORO	WOOD	8295	3794
298	DENVER CITY	YOAKUM	8781	5088
299	GRAHAM	YOUNG	8492	4365
300	OLNEY	YOUNG	8450	4414
301	CRYSTAL CITY	ZAVALA	9466	4246
302	ARANSAS PASS	ARANSAS	9437	3700
303	PLEASANTON	ATASCOSA	9320	4027
304	BANDERA	BANDERA	9205	4190
305	BASTROP	BASTROP	9007	3909
306	MARBLE FALLS	BURNET	8980	4115
307	LOCKHART	CALDWELL	9077	3954
308	LULING	CALDWELL	9117	3933
309	BAIRD	CALLAHAN	8688	4450
310	PITTSBURG	CAMP	8264	3742
311	PANHANDLE	CARSON	8210	5009
312	ATLANTA	CASS	8182	3618
313	RUSK	CHEROKEE	8515	3672
314	HENRIETTA	CLAY	8323	4354
315	CROSBYTON	CROSBY	8548	4862
316	CARROLLTON	DALLAS	8410	4066
317	COOPER	DELTA	8241	3896
318	CARRIZO SPRS.	DIMMIT	9500	4240
319	CISCO	EASTLAND	8662	4377
320	LA GRANGE	FAYETTE	9016	3813
321	MT VERNON	FRANKLIN	8246	3801
322	ANDERSON	GRIMES	8836	3708
323	MEMPHIS	HALL	8287	4821
324	ALAMO	HIDALGO	9854	3754
325	GRANBURY	HOOD	8572	4178
326	CROCKETT	HOUSTON	8634	3685
327	STINNETT	HUTCHNSON	8117	5054
328	JASPER	JASPER	8603	3399
329	GROVES	JEFFERSON	8789	3316
330	PORT NECHES	JEFFERSON	8789	3316
331	COTULLA	LASALLE	9476	4120
332	GIDDINGS	LEE	8968	3848
333	GROESBECK	LIMESTONE	8671	3886
334	LLANO	LLANO	8970	4199
335	NEWTON	NEWTON	8600	3353
336	BRIDGE CITY	ORANGE	8774	3295
337	VIDOR	ORANGE	8761	3334
338	PALO PINTO	PLO PINTO	8541	4291
339	LIVINGSTON	POLK	8716	3543
340	REFUGIO	REFUGIO	9365	3757
341	FRANKLIN	ROBERTSON	8766	3839

Table 3-2. Input Data for the Example Run
(Continuation 6)

342	HEMPHILL	SABINE	8511	3413				
343	SAN AUGUSTINE	SN AUGUST	8491	3471				
344	COLDSPRING	SN JACINT	8754	3567				
345	SAN SABA	SAN SABA	8886	4242				
346	MATHIS	SAN PTRCO	9448	3840				
347	CENTER	SHELBY	8443	3505				
348	RIO GRANDE CTY	STARR	9861	3887				
349	BENBROOK	TARRANT	8499	4140				
350	EVERMAN	TARRANT	8505	4110				
351	RIVEROAKS	TARRANT	8479	4122				
352	GROVETON	TRINITY	8661	3605				
353	WOODVILLE	TYLER	8664	3458				
354	EL CAMPO	WHARTON	9115	3649				
355	WHEELER	WHEELER	8126	4829				
356	IOWA PARK	WICHITA	8327	4445				
357	GEORGETOWN	WILLIAMSO	8927	4014				
358	TAYLOR	WILLIAMSO	8922	3962				
359	QUITMAN	WOOD	8340	3806				
360	PLAINES	YOAKUM	8735	5105				
361	ZAPATA	ZAPATA	9786	4009				
362	(5) → AZLI MULESHOE PD	8	7.35	19.23	.00	.00		
363	.00	.00	.00	.00				
364	AZKK MORTON SO	47	4.38	10.58	.00	.00		
365	.00	.00	.00	.00				
366	AZKW SPUR PD	83	6.28	17.80	.00	.00		
367	.00	.00	.00	.00				
368	AZXZ FLOYDADA SO	94	5.60	11.91	.00	.00		
369	.00	.00	.00	.00				
370	AZLQ POST SO	106	2.86	8.16	.00	.00		
371	.00	.00	.00	.00				
372	AZLA PLAINVIEW PD	118	25.27	55.61	.00	.00		
373	.00	.00	.00	.00				
374	AZLB PLAINVIEW SO	118	7.67	14.67	.00	.00		
375	.00	.00	.00	.00				
376	AZLD LEVELLAND PD	157	10.45	27.80	.00	.00		
377	.00	.00	.00	.00				
378	AZLC LITTLEFIELD PD	183	8.87	21.94	.00	.00		
379	.00	.00	.00	.00				
380	AZKA LITTLEFIELD SO	183	4.57	11.05	.00	.00		
381	.00	.00	.00	.00				
382	AZTI OLTON PD	184	5.36	16.01	.00	.00		
383	.00	.00	.00	.00				
384	AZGL LUBBOCK DPS	193	31.12	98.55	.00	.00		
385	.00	.00	.00	.00				
386	AZLK LUBBOCK PD	193	242.28	340.68	.00	.00		
387	.00	.00	.00	.00				
388	AZLL LUBBOCK SO	193	39.61	59.13	.00	.00		
389	.00	.00	.00	.00				
390	AZLR SLATON PD	194	10.01	23.71	.00	.00		
391	.00	.00	.00	.00				
392	AZLJ TAHOKA PD	195	5.72	17.21	.00	.00		
393	.00	.00	.00	.00				
394	AZKS TAHOKA SO	195	4.03	9.94	.00	.00		
395	.00	.00	.00	.00				
396	AZLF BROWNFIELD PD	269	17.09	40.89	.00	.00		
397	.00	.00	.00	.00				
398	AZLF BROWNFIELD SO	269	4.03	8.36	.00	.00		

Table 3-2. Input Data for the Example Run
(Continuation 7)

```
          .00        .00        .00        .00
    AZLN DENVER CITY PD          295       7.39      20.87       .00       .00
          .00        .00        .00        .00
    NAAE MULESHOE S.O.             8       1.66       5.26       .00       .00
          .00        .00        .00        .00
    NABG CROSBYTON S.O.          312       1.66       5.26       .00       .00
          .00        .00        .00        .00
    NACG LEVELLAND S.O.          157       2.68       8.48       .00       .00
          .00        .00        .00        .00
    NAFA PLAINES S.O.            357       1.53       4.86       .00       .00
          .00        .00        .00        .00
    AAA, 'USTIN SWITCHER         272        .0         .0         .0        .0
          .0         .0         .0         .0         .0
 (6)-->1
 (7)-->1
 (8)->1010101010101010101011101011101110101011101010111011101010101110111011101011110
     1010101010111010101010101010101010101010101010101011101010101010101010101010101011
     1010101010111010111010101010101011101010111010101110101011101011101111011111010
     1010101010101011101010101010101010101010101010101010101011111011101011111010101111
     1110101011101110101010101010111010101011101110101010111010101010111011101010101010
     1010111010101110101110101110101111111110101010101010101010111111010101010101010
     1010101010101110101010111010101110111010101010101010111010111111101010101011110
     1011111011101011111010101010101010101010101010101010101010111110101010101010101010
     1010101010101010101010101110101010101010101010101010101010101010101010101010
 (9)-->3    QN3=3, I.E., 150,1200,2400
 (10)->1.2KB    1200 .7  1 1
     2.4KB    2400 .7  1 1
     4.8KB    4800 .7  1 1
 (11)-->3   QN4=3 AS NO. OF H/W UNITS ASSOCIATE WITH EACH SYS. TEMN.
 (12)->SER.T. MODEM  DROP   QNAMES
 (13)-->10.       10.
        10.       10.
        15.       15.
        15.       15.
        10.       10.
        10.       10.
        15.       15.
        15.       15.
        10.       10.
        10.       10.
        15.       15.
        15.       15.
        50.       50.
        50.       50.
        22.       22.
        22.       22.
        50.       50.
        50.       50.
        22.       22.
        22.       22.
        50.       50.
        50.       50.
        22.       22.
        22.       22.
         0.        0.
         0.        0.
        10.       10.
```

Table 3-2. Input Data for the Example Run (Continuation 8)

456	10.	10.
457	0.	0.
458	0.	0.
459	10.	10.
460	10.	10.
461	0.	0.
462	0.	0.
463	10.	10.
464	10.	10.
465	10.	10.
466	10.	10.
467	15.	15.
468	15.	15.
469	10.	10.
470	10.	10.
471	15.	15.
472	15.	15.
473	10.	10.
474	10.	10.
475	15.	15.
476	15.	15.
477	100.	100.
478	100.	100.
479	54.	54.
480	54.	54.
481	100.	100.
482	100.	100.
483	54.	54.
484	54.	54.
485	100.	100.
486	100.	100.
487	54.	54.
488	54.	54.
489	0.	0.
490	0.	0.
491	10.	10.
492	10.	10.
493	0.	0.
494	0.	0.
495	10.	10.
496	10.	10.
497	0.	0.
498	0.	0.
499	10.	10.
500	10.	10.
501	10.	10.
502	10.	10.
503	15.	15.
504	15.	15.
505	10.	10.
506	10.	10.
507	15.	15.
508	15.	15.
509	10.	10.
510	10.	10.
511	15.	15.
512	15.	15.

Table 3-2. Input Data for the Example Run
(Continuation 9)

```
          100.      100.
          100.      100.
          135.      135.
          135.      135.
          100.      100.
          100.      100.
          135.      135.
          135.      135.
          100.      100.
          100.      100.
          135.      135.
          135.      135.
            0.        0.
            0.        0.
           10.       10.
           10.       10.
            0.        0.
            0.        0.
           10.       10.
           10.       10.
            0.        0.
            0.        0.
           10.       10.
           10.       10.
(14)-->1       QLINEAR FOR 1200 BAUD LINE
          900.         .0     900.         .0
            1.        3.        1.        3.
          900.         .0     900.         .0
            1.        3.        1.        3.
          900.         .0     900.         .0
            1.         .6       1.         .0
      1       QLINEAR FOR 2400 BAUD LINE
          900.         .0     900.         .0
            1.        3.        1.        3.
          900.         .0     900.         .0
            1.        3.        1.        3.
          900.         .0     900.         .0
            1.         .6       1.         .0
      1       QLINEAR FOR 4800 BAUD LINE
          900.         .0     900.         .0
            1.        3.        1.        3.
          900.         .0     900.         .0
            1.        3.        1.        3.
          900.         .0     900.         .0
            1.         .6       1.         .0
(15)-->1 2
        0 0
(16)-->3    2    0    0    8 .008    .0
        3    2    0    0    8 .008    .0
        3    2    0    0    8 .050    .0
(17)-->11
(18)-->LIDR    35 300 4.26   3.94    0    0   .0    .0
       TCIC    60  8615.25  14.47    0    0   .0    .0
       ADM    500 500 3.62   3.62    0    0   .0    .0
      G-CODE  300 300  .13   8.43    0    0   .0    .0
       CCH    426 459 5.78   5.78    0    0   .0    .0
       MVD     50 175 9.34   9.34    0    0   .0    .0
```

Table 3-2. Input Data for the Example Run
(Continuation 10)

```
570        INQ/NL  50 200  .45   .45    0   0  .0    .0
571        ADM/NL 300 300  .45   .0     0   0  .0    .0
572         NCIC   50  90  .0   9.21    0   0  .0    .0
573        DB/DLS  90  50 3.49  1.1     0   0  .0    .0
574        DB/ANT  90  50  .45   .45    0   0  .0    .0
575   (19)-> .110
576 (20)-->2 AAAA     1   @SWITCHER ASSINGMENT WITH I1,1X,A4,I5
577        3            @TERMINATE SWITCHER ASSIGNMENT
578   (21)->AAAA     @STATE CENTER
579 (22)-->6.43      2     @TOTAL XSAC & REQ. AT THE AUSTIN SWITCHER WITH F8.5 &I3
580   (23)->20 7.0   1  @TERM./LINE,RESP. TIME, MPROC WITH I3,F5.2,I2
581 (24)-->1            @1 FOR PLOTTING AND 0 FOR SKIPPING IT WITH I3

CPU:.787   CTP:.091   SUPS:17.904

@BRKPT PRINTS
```

Each group is then divided into three subgroups of 12 cards, one for each chargeable item. Each subgroup is then divided into 3 units, 4 cards per unit, according to the three types of traffic density combinations: high-high, high-low and low-low. Each specific unit is then divided into two subunits of 2 cards. The first subunit is for installation costs, and the second for recurring costs. The first card of each subunit is for costs under half duplexing mode, and the second for costs under full duplexing mode. The first number of each card is the cost for the initial unit; the second for each additional unit at the same location.

Item 14 indicates that, in Texas, a linear costing function is used for all of the line service charges. The first card gives the installation charge as a function of distance, and the second the monthly recurring charge as a function of distance. Under each line type, the line cost is also given as a function of traffic density mix between two terminals.

Item 15 indicates that an optimization process is requested after a star network is formed.

Item 16 shows the line protocol characteristics for those three line types under consideration by providing data such as no. of polling characters, modem turn-around time, while item 17 and 18 give the message statistics. Item 19 indicates that a 110 milli-second is used as the average transaction service time needed in the central switcher of the system being studied.

Item 20 pre-selects system termination AAAA as the RSC, and item 21 designates AAAA as the system centroid.

The three remaining cards define the total traffic load at the central switcher, the multidrop line constraints, and a request for a CalComp plot at the end of each regional network optimization.

3.4.3 Output

After a normal termination from a STACOM program run, outputs from the printer and the CalComp plotter should contain all data desired. This subsection describes the contents of these outputs obtained from the example run.

3.4.3.1 Printer Output. Data showing results from a normal program execution of the STACOM program are printed on a regular printer. Table 3-3 shows the exact output obtained from running the STACOM program utilizing the set of input data as given in Paragraph 3.4.2.

To facilitate the following discussions, the contents of Table 3-3 are itemized as shown.

Item 1 reminds the user that only one region has been considered in this specific run. Item 2 shows the line protocol for each

Table 3-3. Printer Output from the Example Run

```
(1) ---> THERE ARE    1 REGIONS

(2) ---> 1200   POLL CHAR.=   3 NAK CHAR.=   2 POLL O/H=   0
         NAK O/H=   0  MSG O/H=   8
         MPSEM=    .008 PPSEM=    .000
         2400   POLL CHAR.=   3 NAK CHAR.=   2 POLL O/H=   0
         NAK O/H=   0  MSG O/H=   8
         MPSEM=    .008 PPSEM=    .000
         4800   POLL CHAR.=   3 NAK CHAR.=   2 POLL O/H=   0
         NAK O/H=   0  MSG O/H=   8
         MPSEM=    .050 PPSEM=    .000

(3) ---> AVG. INPUT MSG WITH PRIO 1= 147.0 CHARS
         AVG. INPUT MSG              147.0 CHARS
         AVG. OUTPUT MSG W/H PRIO 1= 212.2 CHARS.
         AVG. OUTPUT MSG WITH PRIO2=    .0 CHARS
         OVERALL AVG. MSG     = 184.0 CHARS
(4) ---> 2  AAAA    1
         3          0
```

(5) ---> TRAFFIC MATRIX(BPS)

TERM.	AZLI	AZKK	AZKW	AZXZ	AZLG	AZLA	AZLB	AZLD	AZLC	AZKA	AZTI	AZGL	AZLK	AZLL	AZLP
TRAFIN	1.0	.6	.8	.7	.4	3.4	1.0	1.4	1.2	.6	.7	4.1	32.3	5.3	1.3
TRFOUT	2.6	1.4	2.4	1.6	1.1	7.4	2.0	3.7	2.9	1.5	2.1	13.1	45.4	7.9	3.2
TRAFIN	.0	.0	.0	.0	.0	.0	.0	.0	.0	.0	.0	.0	.0	.0	.0
TRFOUT	.0	.0	.0	.0	.0	.0	.0	.0	.0	.0	.0	.0	.0	.0	.0
TRAFIN	.0	.0	.0	.0	.0	.0	.0	.0	.0	.0	.0	.0	.0	.0	.0
TRFOUT	.0	.0	.0	.0	.0	.0	.0	.0	.0	.0	.0	.0	.0	.0	.0
TRAFIN	.0	.0	.0	.0	.0	.0	.0	.0	.0	.0	.0	.0	.0	.0	.0
TRFOUT	.0	.0	.0	.0	.0	.0	.0	.0	.0	.0	.0	.0	.0	.0	.0

Table 3-3. Printer Output from the Example Run
(Continuation 1)

⑥ → TOTAL TRAFFIC ORIGINATED FROM SYS. TERMN. (BITS/SEC)

AZLI	.980	AZKK	.584	AZKP	.837	AZYZ	.747	AZLO	.381
AZLA	3.369	AZLB	1.023	AZLD	1.393	AZLC	1.183	AZKA	.609
AZTI	.715	AZGL	4.149	AZLK	32.304	AZLL	5.281	AZLR	1.335
AZLJ	.763	AZKS	.537	AZLE	2.279	AZLF	.537	AZLN	.985
NAAF	.221	NABG	.221	NACG	.357	NAFA	.204	AAAA	.000

TOTAL TRAFFIC= 61.00

TOTAL TRAFFIC DESTINATED TO SYS. TERMN. (BITS/SEC)

AZLI	2.564	AZKK	1.411	AZKP	2.373	AZYZ	1.588	AZLO	1.088
AZLA	7.415	AZLB	1.956	AZLD	3.707	AZLC	2.925	AZKA	1.473
AZTI	2.135	AZGL	13.140	AZLK	45.424	AZLL	7.888	AZLR	5.161
AZLJ	2.295	AZKS	1.325	AZLE	5.452	AZLF	1.115	AZLN	2.783
NAAE	.701	NABG	.701	NACG	1.131	NAFA	.688	AAAA	.000

TOTAL TRAFFIC= 114.39

TOTAL SYSTEM TRAFFIC= 175.39

Table 3-3. Printer Output from the Example Run
(Continuation 2)

7 → POINT TO POINT DISTANCE MATRIX

TERM.	AZLR	AZLL	AZLK	AZGL	AZTI	AZKA	AZLC	AZLD	AZLH	AZLA	AZLB	AZXZ	AZKW	AZKK	AZLI
AZLI	83.	67.	67.	67.	34.	31.	31.	49.	59.	59.	105.	82.	119.	35.	
AZKK	68.	54.	54.	54.	44.	28.	28.	25.	69.	69.	88.	84.	111.		
AZKW	46.	58.	58.	58.	89.	91.	91.	88.	70.	70.	37.	45.			
AZXZ	42.	41.	41.	41.	49.	58.	58.	66.	26.	26.	55.				
AZLB	23.	38.	38.	38.	81.	74.	74.	64.	71.	71.					
AZLA	52.	43.	43.	43.	25.	41.	41.	57.	0.						
AZLB	52.	43.	43.	43.	25.	41.	41.	57.							
AZLD	44.	31.	31.	31.	48.	24.	24.								
AZLC	52.	37.	37.	37.	23.	0.									
AZKA	52.	37.	37.	37.	23.										
AZTI	60.	45.	45.	45.											
AZGL	16.	0.	0.												
AZLK	16.	0.													
AZLL	16.														
AZLR	0.														

8 → NCC= AAAA

9 → CPU UTILIZATION PER PROCESSOR IS .707

10 → REG= 1 , STS. TERMN.=

AZLI MULESHOE PD
AZLQ POST SO
AZLC LITTLEFIELD PD
AZLK LUBBOCK PD
AZKS TAHOKA SO
NAAE MULESHOE S.O.
AAAA AUSTIN SWITCHER

AZKK MORTON SO
AZLA PLAINVIEW PD
AZKA LITTLEFIELD SO
AZLL LUBBOCK SO
AZLE BROWNFIELD PD
NAHG CROSBYTON S.O.

AZK SPUR PD
AZLB PLAINVIEW SO
AZTI OLTON PD
AZLR SLATON PD
AZLF BROWNFIELD SO
NACG LEVELLAND S.O.

AZXZ FLOYDADA SO
AZLD LEVELLAND PD
AZGL LUBBOCK DPS
AZLJ TAHOKA PD
AZLH DENVER CITY PD
NAFA PLAINES S.O.

INDICES FOR SYS. TERM.=
1 2 3 4 5 6 7 8 9 10 11 12 13 14 15 16 17 18 19 20 21 22 23 24 25

11 → RSC= AAAA FOR REGION 1

Table 3-3. Printer Output from the Example Run
(Continuation 3)

REGIONAL STAR NETWORK AND ITS COSTS- 1

SYSTEM TERMN.		AZLI	AZKK	AZKH	AZXZ	AZLR	AZLA	AZLH	AZLD	AZLC	AZKA
NO. OF LINES REQ.											
1.2KB		1	1	1	1	1	1	1	1	1	1
2.4KB		0	0	0	0	0	0	0	0	0	0
4.8KB		0	0	0	0	0	0	0	0	0	0
LINE UTILIZATION		.004	.003	.004	.003	.002	.010	.003	.005	.004	.003
DSTNCE FROM RSC		399	379	287	331	294	356	356	355	368	368
TRAFFIC											
LINE TO CPU		.980	.584	.837	.747	.381	3.369	1.023	1.343	1.183	.609
CPU TO LINE		2.564	1.411	2.373	1.588	1.048	7.415	1.956	3.707	2.925	1.473
LINE RESPONSE TIME		3.279	3.276	3.278	3.277	3.275	3.296	3.278	3.283	3.281	3.276
SUBTOTAL											
INST. COSTS											
LINES		0	0	0	0	0	0	0	0	0	0
SER.T.	480	20	20	20	20	20	20	20	20	20	20
MODEM	2400	100	100	100	100	100	100	100	100	100	100
DROP		0	0	0	0	0	0	0	0	0	0
ANNUAL RECURR. COST											
LINES	229750	14364	13644	10332	11916	10588	2563	2563	12780	13248	13248
SER.T.	8640	360	360	360	360	360	360	360	360	360	360
MODEM	12672	528	528	528	528	528	528	528	528	528	528
DROP	5760	240	240	240	240	240	240	240	240	240	240
TOTAL COST											
INST. COST	2880	120	120	120	120	120	120	120	120	120	120
RECUR. COST	256922	15492	14772	11460	13044	11712	3691	3691	13908	14376	14376

REGIONAL STAR NETWORK AND ITS COSTS- 2

SYSTEM TERMN.		AZTI	AZGL	AZLK	AZLL	AZLR	AZLJ	AZKS	AZLE	AZLF	AZLH
NO. OF LINES REQ.											
1.2KB		1	1	1	1	1	1	1	1	1	1
2.4KB		0	0	0	0	0	0	0	0	0	0
4.8KB		0	0	0	0	0	0	0	0	0	0
LINE UTILIZATION		.003	.016	.069	.012	.005	.004	.003	.008	.002	.004
DSTNCE FROM RSC		373	332	332	332	316	311	311	334	334	353
TRAFFIC											
LINE TO CPU		.715	4.149	32.308	5.281	1.335	.763	.537	2.279	.537	.988
CPU TO LINE		2.135	13.140	45.424	7.884	3.161	2.295	1.325	5.452	1.115	2.783
LINE RESPONSE TIME		3.278	3.311	3.461	3.301	3.281	3.278	3.275	3.289	3.275	3.280
SUBTOTAL											
INST. COSTS											
LINES		0	0	0	0	0	0	0	0	0	0
SER.T.		20	20	20	20	20	20	20	20	20	20
MODEM		100	100	100	100	100	100	100	100	100	100
DROP		0	0	0	0	0	0	0	0	0	0
ANNUAL RECURR. COST											
LINES		13428	2390	2390	2390	11376	2239	2239	12024	12024	12708
SER.T.		360	360	360	360	360	360	360	360	360	360
MODEM		528	528	528	528	528	528	528	528	528	528

Table 3-3. Printer Output from the Example Run
(Continuation 4)

DROP	240	240	240	240	240	240	240	240	240	240
TOTAL COST										
INST. COST	120	120	120	120	120	120	120	120	120	120
RECUR. COST	14556	3518	3518	3518	12584	3367	3367	13152	13152	13836

REGIONAL STAR NETWORK AND ITS COSTS- 3

SYSTEM TERMN.	NAAE	NABG	NACG	NAFA	AAAA
NO. OF LINES REQ.					
1.2KB	1	1	1	1	0
2.4KB	0	0	0	0	0
4.8KB	0	0	0	0	0
LINE UTILIZATION	.002	.002	.002	.002	.000
DSTNCE FROM RSC	399	310	355	361	0
TRAFFIC					
LINE TO CPU	.221	.221	.357	.284	.000
CPU TO LINE	.701	.701	1.131	.648	.000
LINE RESPONSE TIME	3.273	3.273	3.275	3.273	.000
SUBTOTAL					
INST. COSTS					
LINES	0	0	0	0	0
SER.T.	20	20	20	20	0
MODEM	100	100	100	100	0
DROP	0	0	0	0	0
ANNUAL RECURR. COST					
LINES	14364	11160	12780	12996	0
SER.T.	360	360	360	360	0
MODEM	528	528	528	528	0
DROP	240	240	240	240	0
TOTAL COST					
INST. COST	120	120	120	120	0
RECUR. COST	15492	12288	13908	14124	0

TOTAL COST= 259702

Table 3-3. Printer Output from the Example Run
(Continuation 5)

(19) → FINAL MULTIDROP NETWORK AND ITS COSTS- 1

SUBNET NO.		1	2
BEGINNNING NODE		AZLL	AZKS
NO. OF TERM.		19	6
NO. OF LINES			
1,2KB		1	1
2,4KB		0	0
4,8KB		0	0
LINE UTILIZATION		.138	.017
TOTAL MILEAGE		617	388
TRAFFIC			
LINE TO CPU		55.691	5.305
CPU TO LINE		100.777	13.617
LINE RESPONSE TIME		4.038	3.416
	SUBTOTAL		
INST. COSTS			
LINES		0	0
SER.T.	260	190	70
MODEM	1300	950	350
DROP		0	0
ANNUAL RECURR. COST			
LINES	16422	11411	5011
SER.T.	4680	3420	1260
MODEM	6864	5016	1848
DROP	3120	2280	840
TOTAL COST			
INST. COST	1560	1140	420
RECUR. COST	31086	22127	8959

TOTAL COST= 32646

Table 3-3. Printer Output from the Example Run
(Continuation 6)

```
(14)→ REGIONAL CENTER= AAAA

      SUBNETWORK
      BEGINS AT

       AZLL
             AZLP
                   AZLA
                         AZXZ
                               NABG
                                     AZKW
                         AZTI
                               AZKA
                                     NACG
                                           AZKK
                                           AZLD
                                     NAAE
                                           AZLI
                                     AZLC
             AZLK
                   AZGL
                         AZLR
                               AZLQ
       AZKS
             AZLJ
                   AZLF
                         NAFA
                               AZLN
                         AZLE
```

individual line type under consideration. For example, a modem turn-around time of 50 milli-seconds has been used in the run.

Item 3 shows the traffic characteristic as calculated by the STACOM program and item 4 prints out the pre-assignment activities. In this example run, the system termination AAAA is preselected as the regional switching center; since only one region is under consideration, all of the remaining system terminations are assigned to region 1.

Item 5 shows a small portion of a traffic matrix from each system termination to four data bases calculated by the program. Item 6 prints the total incoming/outgoing traffic in bps to/from each individual system termination. Also included is total incoming/outgoing traffic to/from the system.

Item 7 gives a short list of point-to-point distances between system terminations as calculated by the program.

Item 8 gives the system centroid as designated from the input. Item 9 shows the CPU utilization at the central switcher of the system being studied.

Item 10 gives the IDs and names of all system terminations in the region and their internal indices. Item 11 prints the regional switching center for the region which has been preselected. In this run, the RSC turns out to be the central switcher.

Item 12 provides the details of the star network developed by the program. For example, the system termination AZLI is linked to the regional switching center AAAA by a 1200 bps line. With the traffic as shown, its line utilization is only .004 and response time 3.279 seconds. It is 399 miles away from AAAA. Based on the tariff applicable for Texas, its installation costs are $20 for service terminal and $100 for modems. Annual recurring costs are $892 for lines, $360 for service terminals, $528 for modems and $240 for the drop charges. After the printout for the star network, the multidrop network (as generated by the STACOM program) is printed as given by item 13. In this example run, two distinctive subnetworks have been generated. Both subnetworks require only the 1200 bps lines. In addition to data similar to item 12, it also includes the total number of terminals on each multidrop line and the total connection milage. Summarized costs are also provided.

Finally, the actual structure of the final multidrop network is printed as item 14. It is printed in a tree-type form, relating each individual termination to others.

The above described printer output is a copy of the FORTRAN output alternate file, 100. In addition to this, a regular FORTRAN output file, 6, is generated by the program. For this example run, Table 3-4 is the copy of output file, 6. It indicates all of the request messages go by the program during its input phase. The last two lines are an indication that the program has been successfully executed.

Table 3-4. Unit 6 Printer Output from the Example Run

```
ASSUME NUMBER OF REGIONS
ENTER NR AND STRIKE RETURN KEY
TYPE IN NO. OF SYS. TERMNS, DATA BASES AND CITIES WITH FORMAT 3I5
THERE ARE    25SYS. TERMNS.,    4 DATA BASES  358 CITIES
TYPE IN DATA BASE LOCATIONS WITH FORMAT 6(1X,A4)
   4 DATA BASES ARE AT  AAAA  DDDD  SSSS  HHHH
TYPE IN CITY V-H WITH FORMAT (33X,I5,2X,I5)
TYPE IN PID NO., NAME, MAPPING ADR. AND TRAFFIC
WITH FORMAT I4,1X,4A6,I4,6F8.2
TYPE IN NO. OF RATE STRUCTURES UNDER
CONSIDERATION WITH FORMAT I3
TYPE IN RATE APPLICATION TO EACH COMBN.
WRT EACH SYS. TERM. WITH FORMAT 10I2
READ IN TRAFFIC DENSITY TYPE AND RATE STRUCTURE
FOR EACH CITY WITH FORMAT 80I1
TYPE IN NO. OF LINE TYPES APPICABLE WITH FORMAT I3
TYPE IN NAME, CAPACITY,  UTIL. FACTOR AVAIL. FOR
EACH LINE TYPE WITH FORMAT A6,1X,I6,1X,F3.2,2(1X,I1)
TYPE IN NO. OF DEVICES  AND NAMES FOR EACH LINE TYPE
WITH FORMAT I3/10(A6,1X)
TYPE IN INST. AND RECURR. COSTS WRT
RATE STRUCTURE, LINE TYPE, DEVICE, TRAFFIC DENSTIY
AND DUPLEXING MODE WITH FORMAT 2F9.2/2F9.2
TYPE IN INST. COSTS [illegible] INES WRT
RATE, LINE, DENSITY, [illegible] DUPLEXING MODE
WITH FORMAT 4F9.2
TYPE IN INDEX FOR LINEARITY OF LINE RECUR. COST
FUNCTION WITH 1=LINEAR AND NONLINEAR OTHERWISE
WITH FORMAT I1 FOR EACH LINE TYPE
TYPE IN RECUR. COSTS WITH FORMAT 4F9.2 IF LINEAR
WITH FORMAT 10F8.3/10F8.3 IF NONLINEAR
IF NONLINEAR, USE 10F8.2
TYPE IN ACTION INDICES FOR EACH REGION
1ST ELEMENT: 1= INSERTION TO THIS PRELOADED REGION IS OK
2ND ELEMENT: 1= OPTIMIZATION IS NEEDED
TYPE IN REGION INDEX AND ACTION NUMBER NEEDED
WITH FORMAT 2I2 AND END IT WITH A 0 0
TYPE IN NPL, NAK, NPLOH, NAKOH, MOH,
TANDM, TAD IN FORMAT (5I4,2F7.5)
TYPE IN NO. OF MSG TYPES, AND TRAFFIC STATISTICS
SUCH AS MSGNAM, MSLIN, MSLOUT, RATIO WITH
FORMAT I4/(A6,2(2I4,2F6.3))
TYPE IN PRELOADED SYSTEM TERMN. AND RSC WITH
FORMAT I1,1X,A4,A5
    3283  DISTANCE ITEMS ARE OVERSIZED
ASSUME A SYSTEM  CENTROID
ENTER CODE FOR NSCC AND STRIKE RETURN KEY
INPUT TOTAL NO. OF TRANSACTIONS AND NO. OF ACCESS AT THE SWITCHER
ENTER WITH F8.5 AND I3 UNDER XSAC/SEC
READ IN LIMITS ON NO. OF SYS. TERMS, ON A LINE
,RESPONSE TIME REQD AND NO. OF PROCESSORS WITH FORMAT
I3,F5.2,I2
IF PLOTTING IS REQUIRED, TYPE 1 WITH FORMAT I3
 TRYLNK HAS BEEN ACCESSED FOR      10052 TIMES
 UPNETW HAS BEEN ACCESSED FOR         22 TIMES

QBRKPT PRINT$
```

3.4.3.2 <u>CalComp Plot</u>. Figure 3-1 is the actual network graph as plotted by the CalComp plotter. It reflects the network as printed in the last part of printer output. It should be noted that because of the existence of identical V-H coordinates associated with system terminations in the example run, fewer distinctive nodes are shown in the plot. The root node is for the system termination, AAAA, which is the location of the Austin central switcher as used in the example run.

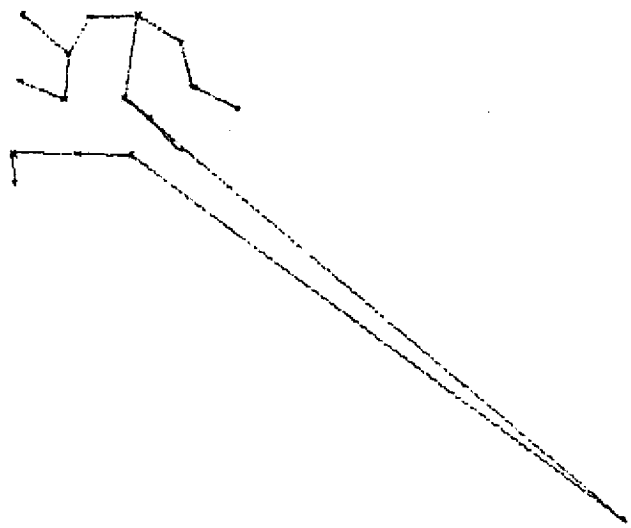

Figure 3-1. CalComp Plot from the Example Run

REFERENCES

1. Esau, L. and Williams, K., "On Teleprocessing System Design: Part II-A, Method for Approximating the Optimal Network", IBM System Journal, Vol. 5, No. 3, 1966.

2. "FORTRAN V Programmer's Reference", UNIVAC Series, UP-4060, Rev. 2, UNIVAC, A Division of Sperry Rand Corporation, Blue Bell, Pa.

3. Martin, J., System Analysis for Data Transmission, Prentice-Hall, Inc., Englewood Cliffs, New Jersey

4. Karnaugh, M., Multipoint Network Layout Program, Internal Document RC (#16892), IBM Thomas J. Watson Research Center, New York

5. Fielding, J., Frewing, K., and Reilly, N., "Requirements Analysis and Design of Ohio Criminal Justice Telecommunications Network", State Criminal Justice Telecommunications (STACOM) Final Report, JPL Document 77-53, Vol. II, Jet Propulsion Laboratory, Pasadena, Calif.

APPENDIX A

STACOM PROGRAM LISTING

```
51928*STACOM(1),MAIN/0777
      C*****************************************************************C
      C*                                                               *C
      C*                      STACOM TOPOLOGY PROGRAM                  *C
      C*                     JET PROPULSION LABORATORY                 *C
      C*                       4800 OAK GROVE DRIVE                    *C
      C*                    PASADENA, CALIFORNIA  91103                *C
      C*                                                               *C
      C*****************************************************************C
      C
      C THIS PROGRAM IS DESIGNED TO PERFORM FORMATIONS OF REGIONS, SELECTIONS
      C OF REGIONAL SWITCHING CENTERS, FORMATIONS OF INITIAL REGIONAL NETWORKS,
      C OPTIMIZATION OF REGIONAL NETWORKS USING THE ESAU-WILLIAMS METHOD IF
      C REQUESTED, AND FINALLY FORMATION OF AN INTERREGION NETWORK AND ITS
      C OPTIMIZATION
      C
      C            ***********************************************
      C
      C THIS TOPOLOGY PROGRAM CONTAINS ONE MAIN PROGRAM AND ELEVEN SUBPROGRAMS.
      C THEY ARE AS FOLLOWS:
      C    MAIN PROGRAM : MAIN (REGION ASSIGNMENTS OF  STEM TERMINATIONS)
      C    SUBPROGRAM-1 : RGNNET (REGIONAL NETWORK  TION AND ITS OPTIMIZATION)
      C    SUBPROGRAM-2 : IRNOP (INTER-REGION NETWORK  TIMIZATION)
      C    SUBPROGRAM-3 : ICOSTJ (COSTING FUNCTION)
      C    SUBPROGRAM-4 : RHOFUN (LINE UTILIZATION FUNCTION)
      C    SUBPROGRAM-5 : LINNUM (LINE CONFN. DEFINITION BASED ON TRAFFIC)
      C    SUBPROGRAM-6 : PACK (STORING OR RETRIEVING DISTANCE DATA)
      C    SUBPROGRAM-7 : DIST (FINDING DISTANCE BETWEEN TWO GIVEN TERMINALS)
      C    SUBPROGRAM-8 : LINK (FINDING COMPRESSED INDEX FOR DIST)
      C    SUBPROGRAM-9 : RECOVR (RECOVERING COMPRESSED DISTANCE DATA)
      C    SUBPROGRAM-10: PLOTPT (PLOTTING EACH DROP ON A MULTIDROP NETWORK)
      C    SUBPROGRAM-11: RSPNSE (ESTIMATING RESPONSE TIME)
      C
      C            ***********************************************
            PARAMETER MW=4,IWT=100,NLIMIT=2,NPC=360,NP9=18
            PARAMETER NP1=130,  NP2=1, NP3=4, NP4=3
            PARAMETER NP6=(NPC*NPC/2-NPC+1)/4+1
            PARAMETER NP7=4,NPO=10*NPC
            COMMON /EIN/ SVR(NP1),NRSC(MW),NUMBR(MW),TRAFON(NP1),
           *       TRAFIT(NP1)
           *   /VH/ IVERT(NPC), IHORZN(NPC)
           *   /CONST/ N1,N2,N3,N4,N7,NCITY
           *   /INF/ IRATEJ(NP2,NP2),IRAND(NPC,2),IFLAG(NP2,NP3)
           *   /BCOST/ AINSTC(NP2,NP3,NP4,3,2,2), RECRC(NP2,NP3,NP4,3,2,2),
           *    ANSTLN(NP2,NP3,3,2,2), RECRLN(NP2,NP3,3,2,16),IDUPLX(NP3)
           *   /LINCHR/ LINMIX(NP3), LINCAP(NP3), UTILIZ(NP3)
           *   /REF/ IREF(NPC),TRAFD(NP1,2,NP7), DSTNCE(NP6),MAPADR(NP1)
           *   /OVFR/ IVRD(NPO,2),IOVER1
           *   /NAME/ NAMEST(NP1,4),LINAME(NP3),NAMEHW(NP4)
           *   /SUM/ ASUM(4),BSUM
           *   /XMT/ TIMXMT(7,NP3), WAIT(6)
           *   /MSLA/ AMSL(9)
           *   /BOUND/ NTERMS,TIMREQ,MPROC,MPLOT
           *   /ADD/ IADD(NP1),KCHG,KADD  QKCHG=FIRST DROP, KADD=JUST FOR LINE
            INTEGER DSTNCE
            DIMENSION IACTN(MW,2),INDXPT(NP1)
            DIMENSION NUMBR(NP1),ITRAFC(2),NBASE(NP7)
```

```
      DATA ITRAFC/'TRAFINTREOUT'/
      DIMENSION TRM(MW,MW), DRM(MW,MW), NUMR(NP1), NUMR(NP1,4)
      INTEGER SVR
      DIMENSION OUTPRT(NP1)
      NMAX=NPO   @MAXIMUM SIZE FOR OVERFLOW DISTANCE DATA TABLE
      CPUAVG=0.
C
C SELECT NUMBER OF REGIONS
C
  225 WRITE(6,220)
      READ(5,735) NR1
      WRITE(IWT,1011) NR1
      ANR1=NR1
C
C READ IN TRAFFIC DENSITY INDEX AND RATE STRUCTURE FOR EACH SYSTEM
C TERMINATION IN THE SYSTEM
C
      CALL CREADA(N1)
C
C READ IN RATE APPLICATION MATRIX
C
      CALL CREADB(N2)
C
C READ IN NAMES, CAPACITIES, UTILIZATION FACTORS AND AVAILABILITIES
C FOR LINES APPLICABLE IN THE SYSTEM
C
      CALL CREADC(N3)
C
C READ IN INSTALLATION AND RECURRING COSTS FOR CHARGEABLE ITEMS
C REQUIRED FOR COMMUNICATION LINES
C
      CALL CREADD(N4)
C
C READ IN INSTALLATION AND RECURRING COSTS FOR LINES
C
      CALL CREADE
C
C READ IN ACTIONS TO BE PERFORMED ON EACH REGIONAL NETWORK
C 1ST ELEMENT : 1=INSERTIONS TO PRELOADED REGIONS ARE ALLOWED
C               0= SUCH AN ACTION IS NOT ALLOWED
C 2ND ELEMENT : 1=NETWORK OPTIMIZATION IS TO BE PERFORMED
C               0=NO OPTIMIZATION IS NEEDED
C
      CALL CREADK
C
C READ IN LINE AND LINE PROTOCOL CHARACTERISTICS
C
      CALL CREADR
C
C CONVERT TRAFFIC FROM CHARACTERS/MIN TO BITS/SEC
C
      DO 85 K=1,2
      DO 85 I=1,N1
      DO 85 L=1,N7
      TRAFD(I,K,L)=TRAFD(I,K,L)*8./60.
85    CONTINUE
      ISUM=0
```

```
      DO 25 I=1,NCITY
        ISUM=ISUM+I
        IREF(I)=ISUM
25    CONTINUE
      DO 701 I=1,NR1
        NUMPR(I) = 0 @NO. OF SYSTEM TERMINATIONS AT EACH REGION
701   CONTINUE
      WRITE(6,888)
805   READ(5,800) NCODE,NSTATE,NREGO
      WRITE(IWT,804) NCODE, NSTATE, NREGO
      NSTATE=LOCAL(NSTATE)   @FIND CARDINAL INDEX
      GO TO(801,802,240),NCODE
802   CONTINUE
      SVR(NSTATE) = NREGO
      NUMPR(NREGO) = NUMPR(NREGO) + 1
801   CONTINUE
      NRSC(NREGO) = NSTATE
      GO TO 805
240   CONTINUE
      DO 70 L=1,N1
        TRAFON(L)=0.
   70 CONTINUE
      IOVER1=1  @COUNTER FOR OVERSIZED TRAFFIC DATA
C
C CALCULATE DISTANCE DATA BETWEEN SYSTEM TERMINATIONS
C
      DO 20 J=1,NCITY
        DO 30 K=1,NCITY
          IF(J-K) 51,30,30
51        CONTINUE
          ISQ1=(IVERT(J)-IVERT(K))**2
          ISQ1=ISQ1+(IHORZN(J)-IHORZN(K))**2
          IF(ISQ1 .EQ. 0)GOTO  22
          SQ1=ISQ1/10.
          NSQ1=INT(SQ1)
          DIFF=SQ1-NSQ1
          IF(DIFF .GT. 0.) SQ1=NSQ1+1.
          BDIST= SQRT(SQ1)
          KDIST=INT(BDIST)
          DIFF=BDIST-KDIST
          IF(DIFF .GT. 0.) KDIST=KDIST+1
          GOTO 23
22        CONTINUE
          KDIST=0
23     CONTINUE
          JKL=LINK(J,K)
          IF(KDIST .LE. 510) GOTO 5
          CALL OVERFL(JKL,KDIST)
          GOTO 30
5         CONTINUE
          CALL PACK(JKL,KDIST,1,DSTNCE)
30      CONTINUE
20    CONTINUE
      IOVER1=IOVER1-1
      WRITE(6,3) IOVER1
C
C TOTAL INPUT TRAFFIC BY EACH SYS. TERMN.
```

```
C
      TRFALL=0.0
      TALLIT=0.
      TALLDN=0.
      DO 41 L=1,N1
        TRAFIT(L)= 0.0
        TRAFDN(L)= 0.0
        DO 42 J=1,N7
          TRAFIT(L) = TRAFIT(L) + TRAFD(L,2,J)
          TRAFDN(L) = TRAFDN(L) + TRAFD(L,1,J)
42      CONTINUE
        TALLDN=TALLDN+TRAFDN(L)
        TALLIT=TALLIT+TRAFIT(L)
41    CONTINUE
      TRFALL=TALLDN+TALLIT
C
C PRINT OUT TRAFFIC DATA BETWEEN SYSTEM TERMINATIONS
C
      NTURN=N1/15 + 1
      NREM=MOD(N1,15)
      IF(NREM .EQ. 0) NTURN=NTURN-1
      WRITE(IWT,111)
      DO 1100 KK=1,1   @FOR TEST ONLY
        KK1=(KK-1)*15 + 1
        KK2=KK*15
        IF(KK2 .GT. N1) KK2=N1
        WRITE(IWT,113) (INDXPT(J), J=KK1,KK2)
        DO 99 J=1,N7
          DO 97 KT=1,2
            DO  28  KR=KK1,KK2
            OUTPRT(KR)=TRAFD(KR,KT,J)
28          CONTINUE
            WRITE(IWT,110) ITRAFC(KT), (OUTPRT(K), K=KK1,KK2)
97        CONTINUE
99      CONTINUE
1100  CONTINUE
C
C PRINT OUT TRAFFIC ORIGINATED FROM EACH SYSTEM TERMINATION
C
      WRITE(IWT,1013)
      WRITE(IWT,1001) (INDXPT(NJ),TRAFDN(NJ),NJ=1,N1)
      WRITE(IWT,74) TALLDN
C
C PRINT OUT TRAFFIC DESTINATED TO EACH SYSTEM TERMINATION
C
      WRITE(IWT,1014)
      WRITE(IWT,1001) (INDXPT(NJ),TRAFIT(NJ),NJ=1,N1)
      WRITE(IWT,74) TALLIT
      WRITE(IWT,75) TRFALL
C
C PRINT OUT DISTANCE DATA BETWEEN SYSTEM TERMINATIONS
C
      NTURN=N1/15+1
      NREM=MOD(N1,15)
      IF(NREM.EQ.0) NTURN=NTURN-1
      NTURN=1          @FOR SHORT OUTPUT
      DO 101 KK=1, NTURN
```

```
            KK1=(KK-1)*15 + 1
            KK2=KK*15
            IF(KK2 .GT. N1) KK2=N1
            WRITE(IWT,109) (INDXPT(J),J=KK2,KK1,-1)
            DO 98 J=1,KK2
              IF(J.GE.KK1) KK1=J+1
              DO 27 KR=KK2,KK1,-1
                OUTPRT(KR)=DIST(J,KR)
27            CONTINUE
              WRITE(IWT,112) INDXPT(J),(OUTPRT(K),K=KK2,KK1,-1)
98          CONTINUE
101       CONTINUE
          WRITE(6,210)
4005      CONTINUE
          READ(5,734) NSCC1
          WRITE(IWT,1015) NSCC1
          NSCC1=LOCAL(NSCC1)
          IF(NSCC1.NE.0) GOTO 4003
          WRITE(6,4013)
          GOTO 4005
4003      CONTINUE
          TPR1 = TRFALL
          WRITE(6,2101)
          READ(5,2102) XSAC, NREQSW  @NREQSW=NO. OF REQUESTS/TRANS AT SWITHER
          WRITE(6,2103)
          READ(5,2104) NTERMS,TTMREQ,MPROC
          WRITE(6,2105)
          READ(5,2104) MPLOT  @MPLOT=1 IF PLOT IS NEEDED
C
C PRE-CALCULATE CPU TURNAROUND TIME
C
          CALL CWAITC
C
C SUM UP TOTAL TRAFFIC FOR PRELOADED SYSTEM TERMINATIONS IN REGIONS
C WHICH DO NOT ALLOW ANY INSERTIONS OF OTHER SYSTEM TERMINATIONS
C
          TPR2=0
          DO 77 N=1,N1
            NK=SVR(N)
            IF(NK .EQ. 0) GOTO 77 @NOT PRELOADED
            IF(IACTN(NK,1) .EQ. 0) GOTO 77  @INSERTIONS ARE ALLOWED
            TPR2=TRAFDN(N) + TRAFIT(N) + TPR2
77        CONTINUE
          DO 76 L=1,NR1
            IF(IACTN(L,1).EQ.0.OR.NUMPR(L).EQ.0) GOTO 76
            ANR1=ANR1-1.
76        CONTINUE
          TPR1=TPR1-TPR2
          IF(NR1 .EQ. 1) GOTO 726  @ONE REGION CASE
C
C DETERMINE LOWER LIMIT FOR AVERAGE REGIONAL TRAFFIC
C
          ZETA=.1
          IF(ANR1.EQ.0.) GOTO 340
          TPR=TPR1/ANR1
          GOTO 350
340       CONTINUE
```

REPRODUCIBILITY OF THE
ORIGINAL PAGE IS POOR

```
      TPR=TPR1
350   CONTINUE
      TPRL=TPR*(1.-ZETA)
      DO 909 NREG=1,NR1
        TRFS=0.
        AMAXD=0.
        II=0
        IF(NUMPR(NREG).NE.0) GOTO 5000 @NREG IS A PRELOADED REGION
C
C ASSIGN SYSTEM TERMINATIONS TO A REGION WITHOUT ANY PRELOADING
C
        DO 400 NI=1,N1
          IF(SVR(NI) .NE. 0) GOTO 400 @NI IS PRELOADED
          ADIST=DIST(NSCC1,NI)
          IF(ADIST .LE. AMAXD) GOTO 400
          AMAXD=ADIST  @UPDATE LONGEST DIST. FROM NCCC
          II=NI  @UPDATE FARTHEST SYS. TERMN.
400     CONTINUE
        NS1=II  @THE FARTHEST SYSTEM TERMINATION
        TRFS=TRFS + TRAFDN(NS1) + TRAFIT(NS1)
        SVR(NS1)=NREG
        NUMPR(NREG)=NUMPR(NREG)+1
        IF(TRFS .GT. TPRL) GOTO 707
        GOTO 7021
5000    CONTINUE
        IF(IACTN(NREG,1) .EQ. 1) GOTO 909 @INSERTIONS ARE NOT ALLOWED
C
C SUM UP TRAFFIC IN THIS REGION
C
        DO 702 I=1,N1
          IF(SVR(I) .NE. NREG) GOTO 702
          TRFS=TRFS+TRAFDN(I)+TRAFIT(I)
          ADIST=DIST(NSCC1,I)
          IF(ADIST .GT. AMAXD) II=I
702     CONTINUE
        IF(TRFS .GT. TPRL) GOTO 707  @ENOUGH TRAFFIC IN THIS REGION
        NS1=II  @THE FARTHEST SYS. TERMN. IN THE REGION
        IF(NRSC(NREG) .NE.0) NS1=NRSC(NREG)
7021    CONTINUE
        CALL FINDD(NS1,NS2)
        IF(NS2 .EQ. 0) GOTO 909
        SVR(NS2)=NREG
        NUMPR(NREG)=NUMPR(NREG)+1
        TRFS=TRFS+TRAFDN(NS2)+TRAFIT(NS2)
        IF(NREG .EQ. NR1) GOTO 7021
        IF(TRFS .GT. TPRL) GOTO 707
        GOTO 7021
707     CONTINUE
        TPR1= TPR1-TRFS   @UPDATE REMAINING TRAFFIC
        ANR1=ANR1- 1.
        TPR=TPR1/ANR1  @UPDATE AVERAGE TRAFFIC PER REGION
        TPRL=TPR*(1. -ZETA)  @UPDATE LOWER LIMIT
909   CONTINUE
      GOTO 703
726   CONTINUE
C
C ONE REGION CASE
```

```
C
      DO 727 NN=1,N1
        SVR(NN) = 1
727   CONTINUE
      NUMPR(1) = N1
703   CONTINUE
C
C SELECT REGIONAL SWITCHING CENTER
C
      DO 500 J=1,NR1
        WCASE = 1.0E12
        NMBR = 0
        DO 505 K=1,N1
          IF(SVR(K) .NE. J) GO TO 505
          NMBR = NMBR + 1
          NUMR(NMBR) = K
          NUMRR(NMBR)=INDXPT(K)
          DO 490 I=1,4
            NUMB(NMBR,I)=NAMEST(K,I)
490       CONTINUE
505     CONTINUE
C
C PRINT OUT PID AND NAMES FOR SYSTEM TERMINATIONS IN THE REGION J
C
        WRITE(IWT,1018) J,(NUMRR(I),(NUMB(I,I1),I1=1,4),I=1,NMBR)
C
C PRINT OUT INDICES OF SYSTEM TERMINATIONS IN THE REGION J
C
        WRITE(IWT,1028) (NUMR(I),I=1,NMBR)
C
        IF(NRSC(J) .NE. 0) GO TO 501  @PPE-SELECTED
        DO 520 K=1,NMBR
          NN1 = NUMR(K)          @ASSUMED RSC
          SUMT = 0.0
          DO 530 L=1,NMBR
            NN2 = NUMR(L)
            SUMT=SUMT+(TRAFON(NN2)+TRAFIT(NN2))*DIST(NN2,NN1)
530       CONTINUE
          IF(SUMT .GT. WCASE) GO TO 520
          WCASE = SUMT
          NRSC(J) = NN1
520     CONTINUE
501     CONTINUE
       NN4=NRSC(J)
       WRITE(IWT,1003) INDXPT(NN4),J
       IGO=IACTN(J,2) @IF 1, OPTIMIZATION IS REQUIRED
        CALL RGNNET(J,NMBR,NUMR,IGO,NUMRR)
500   CONTINUE
C
C GENERATE INTER-REGION ORIGIN-DESTINATION MATRIX
C
C INITIALIZATION
C
      IF(NR1.LE.2) GOTO 551
      DO 902 K1=1,N7
        KKK=NBASE(K1)
        KKK=LOCAL(KKK)
```

```
          IF(KKK .EQ. 0) WRITE(6,7777) K1
          NBASE(K1)=SVR(KKK)
  902   CONTINUE
        DO 699 K1=1,NR1
        DO 699 K2=1,NR1
          TRM(K1,K2)=0.
          TRM(K2,K1)=0.
  699   CONTINUE
        DO 900 J=1,NR1
          NMBR = 0
          DO 905 K=1,N1
            IF(SVR(K) .NE. J) GO TO 905
            DO 915 KK=1,N7
              NN2=NBASE(KK)  @REGIONAL INDEX FOR KK'S DATA BASE
              TRM(J,NN2)=TRAFD(K,2,KK)+TRM(J,NN2)  @OUTGOING TRAFFIC
              TRM(NN2,J)=TRAFD(K,1,KK)+TRM(NN2,J)  @INCOMING TRAFFIC
  915     CONTINUE
  905   CONTINUE
          DO 920 J1=1,NR1
            NN2 = NRSC(J1)
            DRM(J,J1) = DIST(NN1,NN2)
  920   CONTINUE
  900   CONTINUE
        NTURN=NR1/10+1
        DO 535 L=1,NTURN
          LL=(L-1)*10+1
          LU=L*10
          IF(LU.GT.NR1) LU=NR1
          WRITE(IWT,1030) NR1,NR1,(K,K=LL,LU)
          DO 1022 I=1,NR1
            WRITE(IWT,1021) I,(TRM(I,J),J=LL,LU)
  1022    CONTINUE
  535   CONTINUE
        DO 545 L=1,NTURN
          LL=(L-1)*10 + 1
          LU=L*10
          IF(LU .GT. NR1) LU=NR1
          WRITE(IWT,1031) NR1,NR1,(K,K=LL,LU)
          DO 1024 I=1,NR1
          WRITE(IWT,1021) I,(DRM(I,J),J=LL,LU)
  1024    CONTINUE
  545   CONTINUE
C       CALL IRNOP(NR1,NLIMIT,TRM)
  74    FORMAT(//,40X,' TOTAL TRAFFIC=',F9.2)
  75    FORMAT(//,35X,'TOTAL SYSTEM TRAFFIC=',F9.2)
  220   FORMAT('1ASSUME NUMBER OF REGIONS',
       *      /' ENTER NR AND STRIKE RETURN KEY')
  735   FORMAT(I3)
  888   FORMAT(1X,'TYPE IN PRELOADED SYSTEM TERMN. AND RSC WITH',
       1   /,1X,'FORMAT I1,1X,A4,A5')
  800   FORMAT(I1,1X,A4,I5)
  804   FORMAT(10X,I1,2X,A4,I5)
  3     FORMAT(1X,I8,'  DISTANCE ITEMS ARE OVERSIZED')
  210   FORMAT(' ASSUME A SYSTEM  CENTROID',
       *      /' ENTER CODE FOR NSCC AND STRIKE RETURN KEY')
  734   FORMAT(A4)
  4013  FORMAT(' THE GIVEN SYSTEM COMM. CENTROID IS NOT OK, RETYPE IT')
```

```
2101  FORMAT(1X,'INPUT TOTAL NO. OF TRANSACTIONS AND NO. OF ACCESS ',
     1  'AT THE SWITCHER',/,1X,'ENTER WITH F8.5 AND I3 UNDER XSAC/SEC')
2102  FORMAT(F8.5,I3)
2103  FORMAT(1X,'READ IN LIMITS ON NO. OF SYS. TERMS. ON A INF',/,
     1 ' ,RESPONSE TIME REQD AND NO. OF PROCESSORS WITH FORMAT ',
     2 /,' I3,F5.2,I2')
2104  FORMAT(I3,F5.2,I2)
2105  FORMAT(1X,'IF PLOTTING IS REQUIRED, TYPE 1 WITH FORMAT I3')
110   FORMAT((/,1X,A6,2X,15F8.1))
111   FORMAT(1H1,50X,'TRAFFIC MATRIX(PPS) ')
113   FORMAT( //,1X,'TERM. ',4X,15(4X,A4), / )
109   FORMAT(1H1,40X,'POINT TO POINT DISTANCE MATRIX ',
     * //,1X,'TERM.',15(4X,A4), / )
112   FORMAT((2X,A4,15F8.0))
1001  FORMAT((1X,5(6X,A4,2X,F10.3),/))
1003  FORMAT(//,1X,'RSC=',2X,A4,' FOR REGION',I5)
1011  FORMAT(/,10X,' THERE ARE',I5,' REGIONS',/)
1013  FORMAT(1H1,35X,' TOTAL TRAFFIC ORIGINATED FROM SYS. TERMN. ',
     * '(BITS/SEC)',/)
1014  FORMAT(/,35X,' TOTAL TRAFFIC DESTINATED TO SYS. TERMN. ',
     * '(BITS/SEC)',/)
1015  FORMAT(/,10X,' NCC= ',2X,A4,/)
1018  FORMAT(1H1,' REG=',I3,' , SYS. TERMN.=',//,(1X,4(A4,1X,4A6)))
7777  FORMAT(1X,'THE',I3,'TH DATA BASE IS NOT GVN AS A SYS. TERM.')
1021  FORMAT(//,(15X,I5,5X,10F10.3,/))
1028  FORMAT(//,' INDICES FOR SYS. TERM.=',(/,30I4))
1030  FORMAT('1',/,30X,'INITIAL INTERREGION TRAFFIC MATRIX (',
     * I2,' X',I2,')',///,21X,10(5X,I5))
1031  FORMAT('1',/,30X,'INTERREGION DISTANCE MATRIX (',I2,' X',I2,')',
     * 'MILES',///,21X,10(5X,I5))
551   CONTINUE
      STOP
      SUBROUTINE FINDD(N,M)
C           ********************
C
C FIND THE NEXT SYSTEM TERMINATION M WHICH IS CLOSEST TO N
C WHERE M HAS NOT BEEN ASSIGNED TO ANY REGION YET
C
C           ********************
      AMIN=20000.
      M=0
      DO 708 K=1,N1
        IF(SVR(K) .NE. 0) GOTO 708
        ADIST=DIST(N,K)
        IF(ADIST .GE. AMIN) GOTO 708
        AMIN= ADIST
        M=K
708   CONTINUE
      RETURN
      SUBROUTINE CREADK
C           ********************
C READ IN ACTIONS REGARDING INSERTIONS OF SYSTEM TERMINATIONS
C TO PRELOADED REGIONS AND REGIONAL NETWORK OPTIMIZATIONS
C           ******************
      WRITE(6,94)
94    FORMAT(' TYPE IN ACTION INDICES FOR EACH REGION ',
     * /,' 1ST ELEMENT: 1= INSERTION TO THIS PRELOADED REGION IS OK ',
```

```
     * /,' 2ND ELEMENT: 1= OPTIMIZATION IS NEEDED')
      DO 200 NN1=1,NR1
      DO 200 NN2=1,2
        IACTN(NN1,NN2)=0
200   CONTINUE
      WRITE(6,206)
206   FORMAT(' TYPE IN REGION INDEX AND ACTION NUMBER NEEDED',
     * /,' WITH FORMAT 2I2 AND END IT WITH A 0 0')
250   CONTINUE
      READ(5,201) NREG, NCODE
201   FORMAT(2I2)
      IF(NREG .EQ. 0) GOTO 265
      IF(NREG.GT.NR1 .OR. NCODE .GT. 2) GOTO 260
      IACTN(NREG,NCODE)=1
      GOTO 250
260    CONTINUE
      WRITE(6,202)
202    FORMAT(' PLEASE RETYPE THE INPUT')
      GOTO 250
265   CONTINUE  @NO MORE INPUT
      RETURN
      SUBROUTINE CREADA(N1)
C             ********************
C
C FUNCTIONS OF THIS SUBROUTINE ARE TO
C     1. RECEIVE TOTAL NO. OF SYSTEM TERMINATIONS, DATA BASES AND CITIES
C     2. RECEIVE CITY LOCATIONS (V & H)
C     3. RECEIVE PID NO., SYS. TERM. NAMES, ADDR. MAPPING AND TRAFFICS
C
C             ********************
      WRITE(6,81)
81    FORMAT(' TYPE IN NO. OF SYS. TERMNS, DATA BASES AND CITIES '
     *   'WITH FORMAT 3I5')
      READ (5,10) N1,N7,NCITY  @ NUMBER OF SYSTEM TERMINATIONS
      WRITE(6,78) N1,N7,NCITY
78    FORMAT(' THERE ARE ',I5,'SYS. TERMNS.', ',I4,' DATA BASES',I5,
     *' CITIES',/,' TYPE IN DATA BASE LOCATIONS WITH FORMAT 6(1X,A4)')
      READ(5,15) (NBASE(I),I=1,N7)
15    FORMAT(6(1X,A4))
      WRITE(6,16) N7, (NBASE(I),I=1,N7)
16    FORMAT(I5,' DATA BASES ARE AT',6(2X,A4))
      WRITE(6,161)
161   FORMAT(' TYPE IN CITY V-H WITH FORMAT (33X,I5,2X,I5)')
      READ(5,17)(IVERT(I),IHORZN(I),I=1,NCITY)
17    FORMAT((33X,I5,2X,I5))
      WRITE(6,76)
76    FORMAT(' TYPE IN PID NO., NAME, MAPPING ADR. ',
     * 'AND TRAFFIC',/,' WITH FORMAT I4,1X,4A6,I4,6F8.2')
      DO 79 I=1,N1
      READ(5,80)II,(NAMEST(I,J),J=1,4),IADD(I),MAPADR(I),((TRAFD(I,K,L),
     *   K=1,2),L=1,N7)
        INDXPT(I)=II
79    CONTINUE
80    FORMAT((A4,1X,3A6,A4,I2,I4,4F10.2/4F10.2))
10    FORMAT (3I5)
      RETURN
      SUBROUTINE CREADB(N2)
```

```
C            ********************
C
C CREATE A RATE APPLICATION MATRIX IRATEJ(N2,N2)
C
C            ********************
      WRITE(6,83)
83    FORMAT(' TYPE IN NO. OF RATE STRUCTURES UNDER',
     * /, ' CONSIDERATION WITH FORMAT I3')
      READ (5,50) N2
      WRITE(6,84)
84    FORMAT(' TYPE IN RATE APPLICATION TO EACH COMBN. ',
     * /, ' WRT EACH SYS. TERM. WITH FORMAT 10I2')
      DO 11 IRATE=1,N2
        READ (5,100) (IRATEJ (J,IRATE),J=1,N2)
11    CONTINUE
      WRITE(6,71)
71    FORMAT(' READ IN TRAFFIC DENSITY TYPE AND RATE STRUCTURE',
     *  /,' FOR EACH CITY WITH FORMAT 80I1')
      READ(5,72) ((IRAND(I,J),J=1,2),I=1,NCITY)
72    FORMAT((80I1))
50    FORMAT (I3)
100   FORMAT (10I2)
      RETURN
      SUBROUTINE CREADC(N3)
C            ********************
C
C READ IN NAMES, UTILIZATION FACTORS AND CAPACITY FIGURES
C FOR LINES TO BE USED IN THE SYSTEM
C
C            ********************
      WRITE(6,85)
85    FORMAT(' TYPE IN NO. OF LINE TYPES APPICABLE WITH FORMAT I3')
      READ (5,50) N3
      WRITE(6,86)
86    FORMAT(' TYPE IN NAME, CAPACITY,  UTIL. FACTOR AVAIL. FOR ',
     * /,' EACH LINE TYPE WITH FORMAT A6,1X,I6,1X,F3.2,2(1X,I1)')
      DO 12 I=1,N3
        READ(5,100)LINAME(I),LINCAP(I),UTILIZ(I),LINMIX(I),IDUPLX(I)
12    CONTINUE
50    FORMAT (I3)
100   FORMAT(A6,1X,I6,1X,F3.2,2(1X,I1))
      RETURN
      SUBROUTINE CREADD (N4)
C            ********************
C
C CREATE A MATRIX OF BASIC INSTALLATION AND RECURRING COSTS
C FOR CHARGEABLE ITEMS, ASSUMING COST IS A LINEAR FUNCTION
C
C            ********************
      WRITE(6,87)
87    FORMAT(' TYPE IN NO. OF DEVICES  AND NAMES FOR EACH LINE TYPE',
     * /,' WITH FORMAT I3/10(A6,1X)')
      READ (5,50) N4, (NAMEHW(I),I=1,N4)
      WRITE(6,88)
88    FORMAT(' TYPE IN INST. AND RECURR. COSTS WRT ',
     * /,' RATE STRUCTURE, LINE TYPE, DEVICE, TRAFFIC DENSITY ',
     * /,' AND DUPLEXING MODE WITH FORMAT 2F9.2/2F9.2')
```

```
      DO 13 IRATE=1,N2
      DO 13 ILINE=1,N3
      DO 13 IDVICE=1,N4
      DO 13 IDNSTY=1,3
      READ(5,100)((AINSTC(IRATE,ILINE,IDVICE,IDNSTY,J,K),K=1,2),J=1,2)
      READ (5,100)((RECRC(IRATE,ILINE,IDVICE,IDNSTY,J,K),K=1,2),J=1,2)
13    CONTINUE
100   FORMAT (2F9.2/2F9.2)
50    FORMAT(I3/,10(A6,1X))
      RETURN
      SUBROUTINE CREADE
C            **********************
C
C CREATE A MATRIX OF BASIC INSTALLATION AND RECURRING COSTS FOR
C LINES. COST MAY OR MAYNOT BE A LINEAR FUNCTION OF DISTANCE
C
C            **********************
      WRITE(6,89)
89    FORMAT(' TYPE IN INST. COSTS FOR LINES WRT ',
     1 /,' RATE, LINE, DENSITY, AND DUPLEXING MODE ',
     2 /,' WITH FORMAT 4F9.2')
      WRITE(6,90)
90    FORMAT(' TYPE IN INDEX FOR LINEARITY OF LINE RECUR. COST',
     1 /,' FUNCTION WITH 1=LINEAR AND NONLINEAR OTHERWISE',
     2 /,' WITH FORMAT I1 FOR EACH LINE TYPE')
      WRITE(6,91)
91    FORMAT(' TYPE IN RECUR. COSTS WITH FORMAT 4F9.2 IF LINEAR ',
     1 /,' WITH FORMAT 10F8.3/10F8.3 IF NONLINEAR',
     2 /,' IF NONLINEAR, USE 10F8.2')
      DO 14 IRATE=1,N2
      DO 14 ILINE=1,N3
        READ(5,200) INDEX
        IFLAG(IRATE,ILINE)=INDEX @LINE COST LINEARITY INDICATOR
      DO 14 IDNSTY=1,3
        READ (5,100) ((ANSTLN(IRATE,ILINE,IDNSTY,I,J),J=1,2),I=1,2)
        IF (INDEX.NE.1) GO TO 3
C     LINEAR COST FUNCTION
        READ (5,100) ((RECRLN(IRATE,ILINE,IDNSTY,I,J),J=1,2),I=1,2)
        GO TO 14
3     CONTINUE  @ NONLINEAR COST FUNCTION
      READ (5,401) ((RECRLN(IRATE,ILINE,IDNSTY,I,J),J=1,16),I=1,2)
14    CONTINUE
100   FORMAT ((4F9.2))
200   FORMAT (I1)
401   FORMAT ((10F8.3/10F8.3))
      RETURN
      FUNCTION LOCAL(NL)
C            ********************
C
C FIND LOCAL INDEX FOR SYSTEM TERMINATION WITH TO NL
C
C            ********************
      LOCAL=0
      IF(NL.EQ.0) RETURN
      DO 4001 NN=1,N1
        IF(INDXPT(NN).EQ.NL) GOTO 4002
4001  CONTINUE
```

```
      RETURN
4002  LOCAL=NN
      RETURN
      SUBROUTINE OVERFL(J,K)
C           ********************
C
C STORE OVERFLOW ELEMENT (J,K) AT LOCATION IOVER OF TABLE
C LA AND PUT A MARK 511 AT LOCATION J OF TABLE MA (DSTNCE)
C
C           ********************
      IF(IOVER1 .GE. NMAX) GOTO 8000
      CALL PACK (J,511,1,DSTNCE)
      IVRD(IOVER1,1)=J
      IVRD(IOVER1,2)=K
      IOVER1=IOVER1+1
      RETURN
8000  CONTINUE
      WRITE(6,8001)
8001  FORMAT(2X,' THE OVERFLOW TABLE HAS BEEN FULLY LOADED,',
     *   /,2X,' PLEASE INECREASE ITS SIZE')
      STOP
      SUBROUTINE CREADR
C           ********************
C
C RECEIVE DATA FOR RESPONSE TIME CALCULATION
C
C MSLIN(NP9,2)= INPUT MSG LENGTH  AS A FUNCTION OF TYPE AND PRIORITY
C MSLOUT(NP9,2)=OUTPUT MSG LENGTH AS A FUNCTION OF TYPE AND PRIORITY
C AMSL(7)= AVERAGE MSG LENTH FOR
C     1=POLLING   2=NAK RESPONSE   3=INPUT MSG WITH PRIORITY 1
C     4=INPUT MSGS    5=OUTPUT MSG WITH PRIO 1
C     6=OUTPUT MSGS WITH PRIO 2   7=ALL MSGS
C TIMXMT(7,NP3)=AVERAGE TRANSMISSION TIME FOR ABOVE ITEMS
C RATPRI(NP9,2,2)=OUTPUT MSG DISTRBUTN AND OUT-GOING MSG RATIO BY PRIO
C     N,1,1 = PERCENT OF OUTPUT MSG GENT'D WITH PRIO 1 IF ITS TYPE IS N
C     N,1,2 = PERECNT OF OUTPUT MSG WHOSE DESTINATION IS OUTSIDE OF
C RATIOI(NP9,2)=INPUT TRAFFIC DISTRI. AS A FUNCTION OF TYPE AND PRIORITY
C RATIO(NP9,2) =OUTPUT TRAFFIC DISTRI. AS A FUNCTION OF TYPE AND PRIORITY
C
C           ********************
      DIMENSION MSLIN(NP9,2),RATIO(NP9,2),RATIOI(NP9,2),
     1          MSLOUT(NP9,2),MSGNAM(NP9),
     2          NPL(NP3),NAK(NP3),NPLOH(NP3),NAKOH(NP3),
     3          MOH(NP3),TAMDM(NP3),TAPD(NP3)
      WRITE(6,771)
771   FORMAT(' TYPE IN NPL, NAK, NPLOH, NAKOH, MOH,',
     *  /,' TAMDM, TAD IN FORMAT (5I4,2F7.5)')
      READ(5,77) (NPL(I),NAK(I),NPLOH(I),NAKOH(I),
     * MOH(I),TAMDM(I),TAPD(I),I=1,N3)
      WRITE(IWT,73)(LINCAP(I),NPL(I),NAK(I),NPLOH(I),NAKOH(I),
     *  MOH(I),TAMDM(I),TAPD(I),I=1,N3)
73    FORMAT((2X,I5,3X,'POLL CHAR.=',I4,' NAK CHAR.=',I4,' POLL O/H=',
     1  I4,/,10X,'NAK O/H=',I4,'  MSG O/H=',I4,
     2  /,10X,'MPSEM=',F8.3,' PPSEM=',F8.3))
77    FORMAT((5I4,2F7.5))
      WRITE(6,772)
772   FORMAT(' TYPE IN NO. OF MSG TYPES, AND TRAFFIC STATISTICS',
```

```
     1 ,/,' SUCH AS MSGNAM, MSLIN, MSLOUT, RATIO WITH',
     2 ,/,' FORMAT T4/(A6,2(2I4,2F6.3))')
      READ(5,77) NTYP
      READ(5,179) (MSGNAM(I),(MSLIN(I,J),MSLOUT(I,J),
     *  RATIOI(I,J),RATIO(I,J),J=1,2),I=1,NTYP)
179   FORMAT((A6,2(2I4,2F6.3)))
      READ(5,81) CPUAVG
81    FORMAT(F7.4)
C
C CALCULATE AVERAGE MSG LENGTH
C
      DO 61 I=3,7
        AMSL(I)=0.
61    CONTINUE
      DO 58 I=1,4
        ASUM(I)=0.
58    CONTINUE
      DO 62 I=1,NTYP
      DO 66 J=1,2
        J1=J+2
        J2=J+4
        AMSL(J1)=AMSL(J1)+MSLIN(I,J)*RATIOI(I,J)
        AMSL(J2)=AMSL(J2)+MSLOUT(I,J)*RATIO(I,J)
        ASUM(J)=ASUM(J)+RATIOI(I,J)
        ASUM(J1)=ASUM(J1)+RATIO(I,J)
66      CONTINUE
62    CONTINUE
      BSUM=0.
      DO 67 I=1,4
      J1=I+2
      AMSL(7)=AMSL(7)+AMSL(J1)
      BSUM=BSUM+ASUM(I)
67    CONTINUE
      AMSL(7)=AMSL(7)/BSUM   QOVERALL AVG. MSG LENGTH
      IF(ASUM(4) .EQ. 0.) GOTO 68
      AMSL(6)=AMSL(6)/ASUM(4)
68      CONTINUE
      AMSL(5)=AMSL(5)/ASUM(3)   QAVG. MSG LENTH FOR PRIO=1
      AMSL(4)=(AMSL(3)+AMSL(4))/(ASUM(1)+ASUM(2)) QAVG INPUT MSG LEN.
      AMSL(3)=AMSL(3)/ASUM(1)
      WRITE(IWT,105) (AMSL(I),I=3,7)
105   FORMAT(/,5X,'AVG. INPUT MSG WITH PRIO 1=',F6.1,' CHARS',
     1       /,5X,'AVG. INPUT MSG              ',F6.1,' CHARS',
     2       /,5X,'AVG. OUTPUT MSG W/H PRIO 1=',F6.1,' CHARS.',
     3       /,5X,'AVG. OUTPUT MSG WITH PRIO2=',F6.1,' CHARS',
     4       /,5X,'      OVERALL AVG. MSG      =',F6.1,' CHARS')
      DO 65 K=1,N3
      AMSL(1)=NPL(K)
      AMSL(2)=NAK(K)
        TIMXMT(1,K)=(AMSL(1)+NPLOH(K))*8./LINCAP(K)+TAMDM(K)
        TIMXMT(2,K)=(AMSL(2)+NAKOH(K))*8./LINCAP(K)+TAPD(K)
        DO 63  J=3,7
          TIMXMT(J,K)=(AMSL(J)+MOH(K))*8./LINCAP(K)+TAMDM(K)
63      CONTINUE
65    CONTINUE
      BSUM=ASUM(3)+ASUM(4)
      RETURN
```

```
      SUBROUTINE CWAITC
C           ******************
C
C PPF-CALCULATE CPU WAIT TIME
C
C           ******************
      RHOCPU=XSAC*CPUAVG/MPROC
      WRITE(100,850) RHOCPU
850   FORMAT(' CPU UTILIZATION PER PROCESSOR IS ', F5.3)
      IF(RHOCPU .LE. .8) GOTO 851
      WRITE(6,855)
855   FORMAT(' THE CPU IS OVERLOADED, THEREFORE IT IS NO USE TO ',
     * 'GO FURTHER.')
      STOP
851   CONTINUE
      BETA=RHOCPU
      IF( MPROC .EQ. 1) GOTO 700
      RHO2=RHOCPU**2
      BETA=2.*RHO2/(1+RHOCPU)
      IF( MPROC .EQ. 2) GOTO 700
      RHO4=RHOCPU**4
      BETA=256*RHO4/(24+72*RHOCPU+96*RHO2
     *               +64*RHO2*RHOCPU-240*RHO4)
700   CONTINUE
      WAIT(4)=CPUAVG*(BETA/(MPROC*(1.-RHOCPU))+1)
      WAIT(4)=WAIT(4)*NREQSW
      RETURN
      END
```

QPRT STACOM.RGNNET/0777

```
51928*STACOM(1).RGNNET/0777
      SUBROUTINE RGNNET(JREGN, NOREGN, NUMP, IGO, NUMRR)
C            ********************
C
C DEVELOP A REGIONAL MULTIDROP NETWORK, STARTING WITH A STAR
C NETWORK AND THEN OPTIMIZE IT BY ESAU-WILLIAMS METHOD, GIVEN
C THE FOLLOWING AUGUMENTS:
C
C  JREGN= THE INDEX FOR THE REGION UNDER CONSIDERATION
C NOREGN= THE NUMBER OF SYSTEM TERMINATIONS IN REGION JREGN
C   NUMR= AN ARRAY THAT CONTAINS INDICES FOR ALL SYSTEM
C         TERMINATIONS IN REGION JREGN
C     IGO= 1 IF NETWORK OPTIMIZATION IS TO BE PERFORMED
C
C     NOTE: NODE AND SYSTEM TERMINATION ARE EXCHANGEABLE
C
C            ********************
      PARAMETER NP1=130, NP2=1, NP3=4, NP4=3
      PARAMETER NP7=4
      PARAMETER IWT=100, MW=4, NPC=360
      PARAMETER NP6=(NPC*NPC/2-NPC+1)/4+1
      COMMON/CONST/ N1,N2,N3,N4,N7,NCITY
     *   /REF/IREF(NPC),TRAFD(NP1,2,NP7),DSTNCE(NP6),MAPADR(NP1)
     *   /LINCHR/ LINMIX(NP3), LINCAP(NP3), UTILI7(NP3)
     *   /INF/ IRATEJ(NP2,NP2),IRAND(NPC,2),IFLAG(NP2,NP3)
     *   /EIN/ SVR(NP1),NRSC(MW),NUMPR(MW),TRAFON(NP1),TRAFTT(NP1)
     *   /NAME/NAMEST(NP1,4),LINAME(NP3),NAMEHW(NP4)
     *   /SUM/ ASUM(4),BSUM
     *   /MSLA/ AMSL(7)
     *   /ROUND/ NTERMS,TIMREQ,MPROC,MPLOT
     *   /ADD/ IADD (NP1),KCHG,KADD
     *   /RESP/ RHOLIN(4),RSPTIM
      DIMENSION COSTEW(NP1,4),IARRAY(NP1,5),ARRAY(NP1,2)
      DIMENSION TIMRSP(NP1),TRFSUM(NP1,2),TIMOUT(NP1)
      DIMENSION NLINES(NP1,NP3), LDUMMY(NP3), NUMR(1)
      DIMENSION IDST(NP1),LNKCHW(NP3,NP4,2),LNKCLN(NP3,2)
      DIMENSION ICSTHW(NP1,NP4,2),ICSTLN(NP1,2),ITCOST(NP1,2)
      DIMENSION LSUB(NP1),MSUB(NP1),NSUB(NP1)
      DIMENSION IBLANK(NP1),JCHAR(2)
      DIMENSION NUMRR(1)
      DIMENSION RHOF(NP1)
      EQUIVALENCE (JCHAR,ICHAR)
      DATA JBLANK/'      '/
      RSPTIM=0.
      IPOINT=0
      INTEGER TCOST1,TCOST2,COST,COSTEW
C
C INITIALIZE COST ARRAY, INDEPENDENT OF LINE TYPE
C
      DO 399 K1=1,N1
      DO 399 K3=1,2
        ICSTLN(K1,K3)=0
      DO 399 K4=1,N4
        ICSTHW(K1,K4,K3)=0
399   CONTINUE
      NN1=NRSC(JREGN) @GLOBAL INDEX FOR RSC
C
```

```
C FIND THE LOCAL RSC INDEX IN THE REGION ARRAY
C
      DO 98 IND=1,NOREGN
        IF(NN1 .EQ. NUMR(IND)) GOTO 189
 98   CONTINUE
189   CONTINUE
      IRSC=IND
C
C BUILD A STAR NETWORK
C
      CALL STAREW
C
C PRINT OUT STAR NETWORK
C
      CALL SUMPRT(NOREGN,1)
      IF( IGO .EQ. 0) GOTO 979
C
C DEVELOP A MULTIDROP NETWORK UTILIZING THE
C ESAU-WILLIAMS ALGORITHM
C
      MAXSAV=0
      MAXM=0
      MAXL=0
      MAXK=0
      MAXKI=0
      MAXLIN=0
      MAXNOL=0
      LINNEW=0
      RSPMAX=0.
      RHOMAX=0.
      ICHAR=' '
      ITALLY=0
      JTALLY=0
      KCHG=1
      KADD=1
      IOK=0
      INTRY=0
      CALL ESSWIL
      WRITE(6,933) ITALLY,JTALLY
933   FORMAT(2X,'TRYLNK HAS BEEN ACCESSED FOR ',I9,' TIMES',
     1  /,2X,'UPNETW HAS BEEN ACCESSED FOR ',I9,' TIMES')
979   CONTINUE
      RETURN
      SUBROUTINE STAREW
C            ********************
C
C FORM THE INITIAL REGIONAL STAR NETWORK, IARRAY, AND FIND ITS
C COST, COSTEW
C NOREGN=NUMBER OF SYSTEM TERMINATIONS IN THE REGION
C
C            ********************
      INTEGER COST
      DO 100 K3=1, NOREGN
        DO 110 K4=2,4
          IARRAY(K3,K4)=0
110     CONTINUE
        KK=NUMR(K3)
```

```
            IARRAY(K3,1)=IADD(KK)
            IARRAY(K3,5)=IRSC   @ LOCAL INDEX FOR RSC
            ARRAY(K3,1)=TRAFDN(KK)
            ARRAY(K3,2)=TRAFIT(KK)
            TIMRSP(K3)=0.
100       CONTINUE
          IARRAY(IRSC,1)=NOREGN - 1  @NO. OF NODES UNDER RSC
          NM=1   @ASSUMING THE 1ST SUCCESSOR WITH INDEX 1
          IF(IRSC .EQ. 1) NM=2  @1ST SUCCESSOR IS WITH INDEX 2
          IARRAY(IRSC,2)=NM
          IARRAY(IRSC,5)=0
C
C RELATE ALL OF RSC'S SUCCESSORS
C
          DO 200 K5=1, NOREGN
            IF(K5 .EQ. IRSC) GOTO 200
            NM=NM + 1
            IF(NM .EQ. IRSC) NM=NM + 1
            IF(NM .GT. NOREGN) GOTO 200  @END OF SUCCESSORS' LINK
            IARRAY(K5,3)=NM
            IARRAY(NM,4)=K5
200       CONTINUE
C
C DETERMINE LINE TYPE FOR CENTRAL LINKS TO RSC
C
          DO 550 NODE=1, NOREGN
            IF(NODE .EQ. IRSC) GOTO 555
            TREIN=ARRAY(NODE,1)+0.5
            TREOUT=ARRAY(NODE,2)+.5
            NN2=NUMR(NODE)
            DSTN=DIST(NN1,NN2)
            IDST(NODE)=DSTN
            COSTEW(NODE,4)=DSTN
C
C TAKE A FIRST GUESS FOR LINE CONFIGURATION
C
            COST=0
            RHO=0.
            MDROP=IARRAY(NODE,1)+1
            CALL LINNUM(TREIN,TREOUT,LDUMMY,LINOLD,0,RHO)
781       CONTINUE
C
C COMPUTE INITIAL REPONSE TIME
C
            IKONT=0
            DO 783 I=1,N3
            IF(LDUMMY(I) .NE. 0) IKONT=IKONT+1
783         CONTINUE
            AINTRF=TREIN
            OUTTRF=TREOUT
            IF(IKONT .EQ. 1 .AND. LDUMMY(LINOLD) .EQ. 1) GOTO 772
C
C RESPONSE TIME CALCULATION NEEDS MODIFICATION
C
            ACAP=0.
            DO 771 NL=1,N3
            ACAP=ACAP+LINCAP(NL)*LDUMMY(NL)
```

```
171              LDUMMY(NL)=0
172       771    CONTINUE
173              LDUMMY(LINOLD)=1
174              AINTRF=TRFIN*LINCAP(LINOLD)/ACAP PERCENT TRAFFIC
175              OUTTRF=TRFOUT*LINCAP(LINOLD)/ACAP
176       772    CONTINUE
177              CALL RSPNSE(AINTRF,OUTTRF,LINOLD,MDROP,IOK)
178              IF(IOK .EQ. 1) GOTO 773
179              IF(LINOLD .EQ. N3) GOTO 774
180              LDUMMY(LINOLD)=0
181              LINOLD=LINOLD+1
182              LDUMMY(LINOLD)=1
183              GOTO 775
184       774    CONTINUE
185              NLL=0
186              N33=N3-1
187              DO 776 I=1,N33
188                IF(LDUMMY(I) .EQ.0 ) GOTO 776
189                NLL=I
190                GOTO 780
191       776    CONTINUE
192              LDUMMY(1)=1
193              GOTO 775
194       780    CONTINUE
195              LDUMMY(NLL)=0
196              LDUMMY(NLL+1)=LDUMMY(NLL+1)+1
197       775    CONTINUE
198              CALL RHOFUN(TRFIN,TRFOUT,LDUMMY,LINOLD,RHOLIN,RHO)
199              GOTO 781
200       773    CONTINUE
201              TIMRSP(NODE)=RSPTIM
202              KCHG=2
203              CALL ISUMUP(IRSC,NODE,0,COST)
204              RHOF(NODE)=RHO
205              COSTFW(NODE,1)= COST
206              COSTFW(NODE,2)=LINOLD
207              DO 499 NL=1,N3
208                NLINES(NODE,NL)=LDUMMY(NL)
209              DO 499 NM=1,2
210              ICSTLN(NODE,NM)=ICSTLN(NODE,NM)+LNKCLN(NL,NM)
211              DO 499 NK=1,N4
212                 ICSTHW(NODE,NK,NM)=LNKCHW(NL,NK,NM)+ICSTHW(NODE,NK,NM)
213       499    CONTINUE
214              JTRAF=TRFIN+TRFOUT
215              JTRAF=JTRAF/UTILIZ(LINOLD)
216              COSTFW(NODE,3)=JTRAF/LINCAP(LINOLD)+1
217              GOTO 550
218       555    CONTINUE
219       C
220       C ASSUMING TRAFFIC AT IRSC IS TAKEN CARE OF AUTOMATICALLY
221       C
222              DO 498 NL=1,N3
223                NLINES(NODE,NL)=0
224       498    CONTINUE
225              COSTFW(NODE,1)=0
226              COSTFW(NODE,2)=0
227              COSTFW(NODE,3)=0
```

```
            COSTFW(NODE,4)=0
            RHOF(NODE)=0.
      550   CONTINUE
            RETURN
            SUBROUTINE ISUMUP(L1,L2,LT,IC)
      C           ********************
      C
      C CALCULATE COST BETWEEN NODES L1 AND L2 AND ADD IT TO
      C TOTAL COST IC WHERE LT=LINE TYPE
      C
      C           ********************
            LL1=NUMR(L1)
            LL2=NUMR(L2)
            CALL ICOSTJ(LDUMMY,LL1,LL2,LNKCHW,LNKCLN)
            KK=N3
            IF(LT.NE.0) KK=1
            DO 211 LINTYP=1,KK
              LTYP=LINTYP
              IF(KK.EQ.1) LTYP=LT
              DO 221 I1=1,2
                IC=IC+LNKCLN(LTYP,I1)
                DO 222 I2=1,N4
                  IC=IC+LNKCHW(LTYP,I2,I1)
      222       CONTINUE
      221     CONTINUE
      211   CONTINUE
            RETURN
            SUBROUTINE ESSWIL
      C           ********************
      C
      C TRY AGAIN TO OPTIMIZE THE NETWORK
      C
      C           ********************
      5000  CONTINUE
            K=IARRAY(IRSC,2)   @FIRST SUBNETWORK UNDER RSC
            KNEXT=IARRAY(K,3)  @NEXT SUBNETWORK UNDER RSC
            IF(KNEXT .EQ. 0) GOTO 599 @ONLY ONE SUBNETWORK
      560   CONTINUE
            IOK=0
            L=IARRAY(IRSC,2) @K-SUBNET IS TO BE LINKED TO L-SUBNET
      570   CONTINUE
            IF(L .NE. K) GOTO 575
            L=IARRAY(L,3)
            IF(L.EQ.0) GOTO 660
      575   CONTINUE
            K1=NUMR(K)
            DREF=DIST(NN1,K1)
      C
      C TEST TOTAL NO. OF TERMINALS IF K AND L ARE COMBINED
      C
            INTRY=0   @INDICATION OF ENTRY TO TRYLNK
            LINE=COSTFW(K,2)
            IF(LINCAP(LINE) .EQ. 9600) GO TO 585 @NO MULTIDROPPING ON 9600
            NODET=IARRAY(K,1)+IARRAY(L,1)+2
            IF(NODET .GT. NTERMS) GOTO 585 @TOO MANY TERMINALS
            M=L
            KI=K
```

```
580   CONTINUE
      M1=NUMR(M)
      DTRY=DIST(K1,M1)/2.
      IF(DTRY .GT. DREF) GOTO 140
      CALL TRYLNK(K,KI,L,M) @ M IS THE INSERTION NODE
      IF(IOK .EQ. 0) GOTO 585
140   CONTINUE
      M=NXTNOD(L,M)  @NEXT NODE UNDER M ON L-SUBNET
      IF(M .NE. 0) GOTO 580  @NO MORE NODES UNDER M ON L-SUBNET
      KI=NXTNOD(K,KI)  @START WITH NEXT NODE ON K-SUBNET
      IF(KI .EQ. 0) GOTO 585
      K1=NUMR(KI)
      M=L
      GOTO 580
585   CONTINUE
      L=IARRAY(L,3)  @NEXT SUCCESSOR
      IF(L .NE. 0) GOTO 570
660   CONTINUE
      K=IARRAY(K,3)
      IF(K .NE. 0) GOTO 560  @NOT AN END YET, REPEAT THE SEARCH
C
C ALL POSSIBLE COMBINATIONS HAVE BEEN TRIED
C
      IF(MAXSAV .LE. 0) GOTO 599  @NO NEED TO GO FURTHER
C
C UPDATE NETWORK BASED ON UP-TO-DATE MAXIMUM COST SAVING
C PARAMETERS
C
      JTALLY=JTALLY+1
      CALL UPNETW
C
C REINITIALIZATION
C
      RSPMAX=0.
      MAXSAV=0
      MAXK=0
      MAXL=0
      MAXM=0
      MAXKI=0
      MAXLIN=0
      LINNEW=0
      MAXNOL=0
      RHOMAX=0.
      GOTO 5000
599   CONTINUE
C
C PRINT OUT COSTS FOR THE OPTIMIZED MULTIDROP NETWORK
C
      CALL MUTDRP
C
C PRINT OUT THE OPTIMIZED MULTIDROP NETWORK
C
      CALL NETPRT
      IF( MPLOT .NE. 1) GOTO 50
      CALL CALPLT
50    CONTINUE
      RETURN
```

```
      SUBROUTINE TRYLNK(KL,KIL,LL,ML)
C           ********************
C
C TRY TO ELIMINATE CENTRAL LINK KL AND LINK IT TO THE SUBNETWORK
C LL THROUGH SYSTEM TERMINATIONS KIL AND ML.
C
C           ********************
      INTEGER  COSTKM,COST
      ITALLY=ITALLY+1
      IF(INTRY .EQ. 1) GOTO 719
      TRFIN=ARRAY(KL,1)+ARRAY(LL,1)+0.5
      TRFOUT=ARRAY(KL,2)+ARRAY(LL,2)+0.5
C
C FIND THE LINE WITH THE ENOUGH CAPACITY TO HANDLE
C THE TOTAL TRAFFIC ON THE PROPOSED SUBNETWORK  LL
C
      CALL LINNUM(TRFIN,TRFOUT,LDUMMY,LINNEW,1,RHO)
      IF(LINCAP(LINNEW) .EQ. 9600) GOTO 132
      LINUP=LINNEW-1
      IF(LINUP .EQ. 0) GOTO 712
      DO 711 NL=1,LINUP
        IF(LDUMMY(NL) .EQ. 0) GOTO 711
        GOTO 132
711   CONTINUE
712   CONTINUE
      NLNEW=LDUMMY(LINNEW)
      IF(NLNEW .GT. 1) GOTO 132 @MORE THAN 1 LINE NOT ALLOWED
      COST=COSTEW(LL,1)
      LINOLD=COSTEW(LL,2)
      NLOLD=COSTEW(LL,3)
      MCOSTL=COST
3000  CONTINUE
C
C TEST RESPONSE TIME, IF NOT SATISFIED, INCREASE LINE CAPACITY
C
      CALL RSPTST(KL,LL,LINNEW,IOK)
      IF(IOK .EQ. 1) GOTO 3001
C
C IF LINE TYPE IS THE HIGHEST, NO NEED TO GO FURTHER
C
      IF(LINNEW .EQ. N3) GOTO 132
      LDUMMY(LINNEW)=0
      LINNEW=LINNEW+1
      IF(LINCAP(LINNEW) .EQ. 9600) GOTO 132
      LDUMMY(LINNEW)=1
      NLNEW=1
      CALL RHOFUN(TRFIN,TRFOUT,LDUMMY,LINNEW,RHOLIN,RHO)
      GOTO 3000
3001  CONTINUE
      IF(LINNEW.EQ.LINOLD.AND.NLOLD.EQ.1) GOTO 131
      CALL LCOSTK(IRSC,LL,1,MCOSTL)   @NEW COST FOR SUBNET UNDER LL
131   CONTINUE
      LINOLD=COSTEW(KL,2)
      MCOSTK=COSTEW(KL,1)
      NLOLD =COSTEW(KL,3)
      IF( LINNEW .EQ. LINOLD .AND. NLOLD .EQ. 1) GOTO 133
      CALL LCOSTK(IRSC,KL,0,MCOSTK)  @NEW COST FOR SUBNET UNDER KL
```

```
      GOTO 134
133   CONTINUE
      ITEMP=0
      KADD=0
      KCHG=2
      CALL ISUMUP(IRSC,KL,LINNEW,ITEMP)
      MCOSTK=MCOSTK-ITEMP
134   CONTINUE
      INTRY=1  @FLAG THAT INDICATES AN ENTRY TO TRYLNK
      JSAV=COSTEW(LL,1)+COSTEW(KL,1)-(MCOSTL+MCOSTK)
719   CONTINUE
      COSTKM=0
      KADD=0
      CALL ISUMUP(ML,KIL,LINNEW,COSTKM)
      ISAV=JSAV-COSTKM
      IF (ISAV .LE. MAXSAV) GO TO 132
      RSPMAX=RSPTIM
      MAXSAV=ISAV
      MAXK=KL
      MAXL=LL
      MAXM=ML
      MAXKI=KIL
      MAXLIN= LINNEW
      MAXNOL=NLNEW
      RHOMAX=RHO
132   CONTINUE
      RETURN
      SUBROUTINE LCOSTK(I,NA,NB,TCOST)
C           ********************
C
C     FIND COST FOR A SUBNETWORK. NA=BEGINNING NODE FOR THE SUBNET
C     TO BE EVALUATED.
C     NB=1 WHEN COST FOR CENTRAL LINK NA IS TO BE INCLUDED
C     NB=0 WHEN COST FOR CENTRAL LINK NB IS NOT TO BE INCLUDED
C
C           ********************
      INTEGER TCOST
      TCOST=0
      KCHG=2
      CALL ISUMUP (I,NA,LINNEW,TCOST)
C
C     START COMPUTING SUBNET COST
C
      JSON=IARRAY(NA,2)          @ FIRST SUCCESSOR
      IF(JSON.EQ.0) GOTO 400
300   CONTINUE
      JPA=IARRAY(JSON,5)
      CALL ISUMUP(JPA,JSON,LINNEW,TCOST)
      JSON=NXTNOD(NA,JSON)
      IF (JSON .EQ. 0) GO TO 400        @ CALL IT AN END
      GO TO 300
400   CONTINUE
      IF(NB .EQ. 1) RETURN
      ITEMP=0
      KADD=0
      CALL ISUMUP(I,NA,LINNEW,ITEMP)
      TCOST=TCOST-ITEMP
```

```
      RETURN
      FUNCTION NXTNOD(L1,M1)
C           ********************
C
C     FIND THE NEXT NODE IN THE SUBNET L1 WHICH M1 BELONGS TO.
C     IN THE PROCESS, IF THE NEXT NODE IS L1, 0 IS RETURNED
C     OTHERWISE THE NEXT NODE IS RETURNED.
C
C           ********************
      NXTNOD=0
      MM=M1
      KSON=IARRAY(MM,2)
      IF(KSON .EQ. 0 .AND. MM .EQ. L1) RETURN  @A SINGLE NODE
      IF (KSON .EQ. 0) GO TO 1          @ NO SUCCESSOR
      NXTNOD=KSON
      RETURN
1     CONTINUE
C
C     LOOK FOR HIS NEXT BROTHER
C
      KBRO=IARRAY(MM,3)
      IF (KBRO .EQ. 0) GO TO 2   @NO MORE SUCCESSORS WITH SAME PREDECESSOR
      NXTNOD=KBRO
      RETURN
2     CONTINUE
C
C     GO TO HIS FATHER
C
      MM=IARRAY(MM,5)
      IF (MM .NE. L1) GO TO 1             @ BACK TO THE BEGINNING
      RETURN
      SUBROUTINE UPNETW
C           ********************
C
C UPDATE IARRAY AND COSTEW BASED ON MAXIMUM-SAVING
C PARAMETERS OBTAINED
C
C UPDATE TRAFFIC AND NO. OF TERMINALS FOR L-SUBNET
C
C           ********************
      NOK=IARRAY(MAXK,1)+1  @NO. OF NODES BELOW MAXK
      IARRAY(MAXL,1)=IARRAY(MAXL,1)+NOK
      ARRAY(MAXL,1)=ARRAY(MAXL,1)+ARRAY(MAXK,1)
      ARRAY(MAXL,2)=ARRAY(MAXL,2)+ARRAY(MAXK,2)
C
C UPDATE THE COSTEW
C
      COSTEW(MAXL,1)=COSTEW(MAXL,1)+COSTEW(MAXK,1)-MAXSAV
      COSTEW(MAXL,2)=MAXLIN
      COSTEW(MAXL,3)=MAXNOL
      COSTEW(MAXK,1)=0
      COSTEW(MAXK,2)=0
      COSTEW(MAXK,3)=0
      MAXKD=NUMR(MAXK)
      MAXMD=NUMR(MAXM)
      MAXKID=NUMR(MAXKI)
      COSTEW(MAXL,4)=COSTEW(MAXL,4)+COSTEW(MAXK,4)+DIST(MAXKID,MAXMD)
```

```
     *          -DIST(MAXKD,NN1)
      RHOF(MAXL)=RHOMAX
      COSTEW(MAXK,4)=0
C
C UPDATE MULTIDROPPED-LINE RESPONSE TIME
C
      TIMRSP(MAXL)=RSPMAX
91    CONTINUE
      KIPA=IARRAY(MAXKI,5)  @REMEMBER KI'S PREDECESSOR
      MSON=IARRAY(MAXM,2)  @M'S 1ST SUCCESSOR
      CALL LNKOFF(MAXKI)  @DELETE KI AS A SUCCESSOR OF KIPA
      IARRAY(MAXM,2)=MAXKI
      IARRAY(MAXKI,5)=MAXM
      IARRAY(MAXKI,3)=MSON
      IF(MSON .NE. 0) IARRAY(MSON,4)=MAXKI
      IARRAY(MAXKI,4)=0
      MAXM=MAXKI
      MAXKI=KIPA
      IF(MAXM .NE. MAXK) GOTO 91
      RETURN
      FUNCTION JCOSTA(N,KREF)
C           ******************
C
C FIND PARTIAL SUM FOR ICSTLN
C
C           ******************
      JCOSTA=0
      DO 777 K1=1,KREF
        JCOSTA=JCOSTA+ICSTLN(K1,N)
777   CONTINUE
      RETURN
      FUNCTION JCOSTB(N,M,KREF)
C           ******************
C
C FIND PARTIAL SUM FOR ICSTHW
C
C           ******************
      JCOSTB=0
      DO 778 KK=1,KREF
        JCOSTB=JCOSTB+ICSTHW(KK,N,M)
778   CONTINUE
      RETURN
      SUBROUTINE NETPRT
C            ********************
C
C PRINT OUT CONFIGURATION OF THE MULTIDROP NETWORK
C
C            ********************
      DO 196 KK=1,NP1
        IBLANK(KK)=JBLANK
196   CONTINUE
      NN2=NUMBR(IRSC)
      WRITE(IWT,197) NN2
197   FORMAT(1H1,' REGIONAL CENTER= ',A4//,6X,'SUBNETWORK',/,6X,
     * 'BEGINS AT',//)
      KP=1
      ISON=IARRAY(IRSC,2)
```

```
      IPOINT=ISON
      ISONR=NUMRR(ISON)
      WRITE(IWT,192) (IBLANK(I),I=1,KP),ISONR
C
C LOOK FOR ITS FIRST SUCCESSOR
C
190   CONTINUE
      ISON=IARRAY(IPOINT,2)   @CURRENT NODAL INDEX
      IF(ISON .EQ. 0) GOTO 191 @NO MORE SON
      KP=KP + 1 @A LEVEL DEEPER
      ISONR=NUMRR(ISON)
      WRITE(IWT,192)( IBLANK(I),I=1,KP),ISONR
192   FORMAT(1X,24(A6))
      IPOINT=ISON
      GOTO 190
191   CONTINUE
C
C LOOK FOR NEXT SUCCESSOR WITH THE SAME PREDECESSOR
C
      IBRO=IARRAY(IPOINT,3)
      IF(IBRO .EQ. 0) GOTO 193
      IBROR=NUMRR(IBRO)
      WRITE(IWT,192)(IBLANK(I),I=1,KP),IBROR
      IPOINT=IBRO
      GOTO 190
193   CONTINUE
C
C NEXT LEVEL UP
C
      KP=KP-1
      IPOINT=IARRAY(IPOINT,5)
      IF(KP .EQ. 0) GOTO 194  @NO NEED TO GO FURTHER
      GO TO 191
194   CONTINUE
      RETURN
      SUBROUTINE CONVRT(ICOST)
C           ********************
C
C CONVERT A NUMBER INTO ITS FIELD EQUIVALENT
C
C           ********************
      JCHAR(1)=JBLANK
      JCHAR(2)=JBLANK
      IF(ICOST .EQ. 0) GOTO 916
      ENCODE(198,JCHAR) ICOST
198   FORMAT(I8)
916   CONTINUE
      RETURN
      SUBROUTINE SUMPRT(NREF,NN)
C           ********************
C
C SUM UP COSTS AND PRINTS
C
C           ********************
      TCOST1=0
      TCOST2=0
      DO 779 K=1,NREF
```

```
            ITCOST(K,1)=ICSTLN(K,1)
            ITCOST(K,2)=ICSTLN(K,2)
            DO 7791 KK=1,N4
              ITCOST(K,1)=ITCOST(K,1)+ICSTHW(K,KK,1)
              ITCOST(K,2)=ITCOST(K,2)+ICSTHW(K,KK,2)
      7791  CONTINUE
            TCOST1=TCOST1+ITCOST(K,1)
            TCOST2=TCOST2+ITCOST(K,2)
      779 CONTINUE
          KCOST=TCOST1+TCOST2
      C
      C PRINT OUT COST
      C
          NTURN=NREF/10+1
          IREM=MOD(NREF,10)
          IF(IREM .EQ. 0) NTURN=NTURN-1
          LPAGE=1
          DO 919 KW=1,NTURN
            KWL=10*(KW-1)+1
            KWU=10*KW
            IF(KWU.GT.NREF) KWU=NREF
            IF(NN .EQ. 0) GOTO 879
            IF(LPAGE.NE.1) GOTO 9033
            WRITE(IWT,9031) KW
      9031  FORMAT('1',40X,'REGIONAL STAR NETWORK AND ITS COSTS=',I2)
            GOTO 9035
      9033  CONTINUE
            WRITE(IWT,9034)KW
      9034  FORMAT(/,40X,'REGIONAL STAR NETWORK AND ITS COSTS=',I2)
      9035  CONTINUE
            WRITE(IWT,9032) (NUMRR(I),I=KWL,KWU)
      9032  FORMAT(/,1X,'SYSTEM TERMN.',13X,10(4X,A4,1X))
            WRITE(IWT,903)
      903   FORMAT(/,1X,'NO. OF LINES REQ.')
            DO 1903 NJ=1,N3
              IF(LINMIX(NJ) .EQ. 0) GOTO 1903
              WRITE(IWT,904) LINAME(NJ),(NLINES(K,NJ),K=KWL,KWU)
      904   FORMAT(7X,A6,14X,10(I8,1X))
      1903  CONTINUE
            WRITE(IWT,9036) (RHOF(NJ),NJ=KWL,KWU)
      9036  FORMAT(/,1X,,'LINE UTILIZATION',11X,10(F8.3,1X))
            WRITE(IWT,906) (IDST(N),N=KWL,KWU)
      906   FORMAT(/,1X,'DSTNCF FROM RSC',11X,10(I8,1X))
            GO TO 806
      879   CONTINUE
            IF(LPAGE.NE.1) GOTO 8033
            WRITE(IWT,8031) KW
      8031  FORMAT('1',40X,'FINAL MULTIDROP NETWORK AND ITS COSTS=',I2)
            GOTO 8035
      8033  CONTINUE
            WRITE(IWT,8034) KW
      8034  FORMAT(/,40X,'FINAL MULTIDROP NETWORK AND ITS COSTS=',I2)
      8035  CONTINUE
            WRITE(IWT,803)(I,I=KWL,KWU)
      803   FORMAT(/,1X,'SUBNET NO.',16X,10(I8,1X))
            DO 1803 N=KWL,KWU
              ID=NSUB(N)
```

```
584                 MSUB(N)=NUMRR(ID)
585                 LSUB(N)=IARRAY(ID,1)+1
686       1803    CONTINUE
687               WRITE(IWT,1806) (MSUB(N),N=KWL,KWU)
688       1806  FORMAT(/,1X,'BEGINNNING NODE',11X,10(4X,A4,1X))
689             WRITE(IWT,1807) (LSUB(N),N=KWL,KWU)
690       1807  FORMAT(3X,'NO. OF TERM.',12X,10(I8,1X))
691             WRITE(IWT,811)
692       811   FORMAT(3X,'NO. OF LINES')
693               DO 1808 NJ=1,N3
694                 IF(LINMIX(NJ).EQ.0) GOTO 1808
695                 WRITE(IWT,904) LINAME(NJ),(NLINES(K,NJ),K=KWL,KWU)
696       1808  CONTINUE
697             WRITE(IWT,8036)(RHOF(NJ),NJ=KWL,KWU)
698       8036  FORMAT(3X,'LINE UTILIZATION',9X,10(F8.3,1X))
699             WRITE(IWT,808) (IDST(N),N=KWL,KWU)
700       808   FORMAT(3X,'TOTAL MILAGE',12X,10(I8,1X))
701       806   CONTINUE
702               DO 1101 N=KWL,KWU
703                 ID=N
704                 IF(NN.EQ.0) ID=NSUB(N)
705                 TRFSUM(N,1)=ARRAY(ID,1)
706                 TRFSUM(N,2)=ARRAY(ID,2)
707                 TIMOUT(N)=TIMRSP(ID)
708       1101    CONTINUE
709             WRITE(IWT,1102) (TRFSUM(N,1),N=KWL,KWU)
710       1102  FORMAT(3X,'TRAFFIC',/,3X,'   LINE TO CPU',11X,10(F8.3,1X))
711             WRITE(IWT,1103)(TRFSUM(N,2),N=KWL,KWU)
712       1103  FORMAT(3X,'   CPU TO LINE ',10X,10(F8.3,1X))
713             WRITE(IWT,1104) (TIMOUT(N),N=KWL,KWU)
714       1104  FORMAT(3X,'LINE RESPONSE TIME',7X,10(F8.3,1X))
715             WRITE(IWT,907)
716       907   FORMAT(21X,'SUBTOTAL',/,1X,'INST. COSTS')
717               COST=JCOSTA(1,NREF)
718               IF(KW.NE.1) COST=0
719               CALL CONVRT(COST)
720             WRITE(IWT,908) (JCHAR(L),L=1,2),(ICSTLN(NODE,1),NODE=KWL,KWU)
721       908   FORMAT(5X,'LINES',8X,A6,A2,1X,10(I8,1X))
722               DO 1909 K=1,N4
723                 COST=JCOSTB(K,1,NREF)
724                 IF(KW.NE.1) COST=0
725                 CALL CONVRT(COST)
726             WRITE(IWT,909) NAMEHW(K),(JCHAR(L),L=1,2),(ICSTHW(NODE,K,1),
727            * NODE=KWL,KWU)
728       909   FORMAT(5X,A6,7X,A6,A2,1X,10(I8,1X))
729       1909  CONTINUE
730             WRITE(IWT,910)
731       910   FORMAT(1X,'ANNUAL RECURR. COST')
732               COST=JCOSTA(2,NREF)
733               IF(KW.NE.1) COST=0
734               CALL CONVRT(COST)
735             WRITE(IWT,908) (JCHAR(L),L=1,2),(ICSTLN(NODE,2),NODE=KWL,KWU)
736               DO 1911 K=1,N4
737               COST=JCOSTB(K,2,NREF)
738               IF(KW.NE.1) COST=0
739               CALL CONVRT(COST)
740             WRITE(IWT,909) NAMEHW(K),(JCHAR(L),L=1,2),(ICSTHW(NODE,K,2),
```

```
     * NODE=KWL,KWU)
1911 CONTINUE
     WRITE(IWT,912)
912  FORMAT(1X,'TOTAL COST')
       IF(KW.NE.1) TCOST1=0
       CALL CONVRT(TCOST1)
     WRITE(IWT,913) (JCHAR(L),L=1,2),(ITCOST(K,1),K=KWL,KWU)
       IF(KW.NE.1) TCOST2=0
       CALL CONVRT(TCOST2)
     WRITE(IWT,914)(JCHAR(L),L=1,2),(ITCOST(K,2),K=KWL,KWU)
913  FORMAT(4X,'INST. COST',4X,A6,A2,1X,10(I9,1X))
914  FORMAT(4X,'RECUR. COST',3X,A6,A2,1X,10(I9,1X))
       LPAGE=LPAGE+1
       LPAGE=MOD(LPAGE,2)
919  CONTINUE
     WRITE(IWT,695) KCOST
695  FORMAT(/,25X,'TOTAL COST=',I8)
     RETURN
     SUBROUTINE MUTDRP
C          ********************
C
C PRINT OUT FINAL MULTIDROP NETWORK WITH ITS COSTS
C
C          ********************
     DO 590 NL=1,N3
       LDUMMY(NL)=0
590  CONTINUE
     IBRO=IARRAY(IRSC,2)  @FIRST SUCCESSOR
     K1=1
699  CONTINUE
     IF(IBRO .EQ. 0) GOTO 698
     NK2=NUMR(IBRO)
     NK1=NN1
     NSUB(K1)=IBRO
     LINE=COSTEW(IBRO,2)
     LDUMMY(LINE)=COSTEW(IBRO,3)
     JSON=IARRAY(IBRO,2)
     IF(JSON.EQ.0) GOTO 694
     DO 592 NM=1,2
       ICSTLN(K1,NM)=0
       DO 592 NK=1,N4
         ICSTHW(K1,NK,NM)=0
592    CONTINUE
     DO 596 NL=1,N3
       NLINES(K1,NL)=LDUMMY(NL)
596  CONTINUE
     KCHG=2
312  CONTINUE
     CALL ICOSTJ(LDUMMY,NK1,NK2,LNKCHW,LNKCLN)
     DO 595 NL=1,N3
     DO 595 NM=1,2
       ICSTLN(K1,NM)=ICSTLN(K1,NM)+LNKCLN(NL,NM)
     DO 595 NK=1,N4
       ICSTHW(K1,NK,NM)=ICSTHW(K1,NK,NM)+LNKCHW(NL,NK,NM)
595  CONTINUE
     IF(JSON.EQ.0) GOTO 311
     NK2=NUMR(JSON) @GLOBAL INDEX FOR NEXT NODE
```

```
      NK1=IARRAY(JSON,5) @PREDECESSOR
      NK1=NUMR(NK1) @GLOBAL INDEX FOR PREDECESSOR
      JSON=NXTNOD(IBRO,JSON)
      GOTO 312
311   CONTINUE
      LDUMMY(LINE)=0
      GOTO 591
694   CONTINUE
C
C USE PREVIOUS DATA
C
      DO 597 NL=1,N3
        NLINES(K1,NL)=NLINES(IBRO,NL)
597   CONTINUE
      DO 598 NM=1,2
        ICSTLN(K1,NM)=ICSTLN(IBRO,NM)
      DO 598 NK=1,N4
        ICSTHW(K1,NK,NM)=ICSTHW(IBRO,NK,NM)
598   CONTINUE
      LDUMMY(LINE)=0
591   CONTINUE
      IDST(K1)=COSTEW(IBRO,4)
      RHOF(K1)=RHOF(IBRO) @SHUFFLING RHO'S DUE TO RE-INDEXING
      IBRO=IARRAY(IBRO,3)
      K1=K1+1
      GOTO 699
698   CONTINUE
      NOSUB=K1-1
      CALL SUMPRT(NOSUB,0)
      RETURN
      SUBROUTINE CALPLT
C           ********************
C
C PLOT A MULTIDROP NETWOEK
C
C           ********************
      KP=1
      IPOINT=IRSC
      CALL TRSFRM(2)
      ISON=IARRAY(IRSC,2)   @FIRST SUCCESSOR
      IPOINT=ISON
      CALL TRSFRM(1)
C
C LOOK FOR ITS FIRST SUCCESSOR
C
190   CONTINUE
      ISON=IARRAY(IPOINT,2) @FIRST SUCCESSOR
       IF(ISON .EQ. 0) GOTO 191
      KP=KP+1
      IPOINT=ISON
      CALL TRSFRM(1)
      GOTO 190
191   CONTINUE
C
C LOOK FOR ITS NEXT SUCCESSOR
C
      IBRO=IARRAY(IPOINT,3)
```

```
      IPOINT=IARRAY(IPOINT,5)  @NOW ITS PREDECESSOR
      CALL TRSFRM(2)
      IF(IBRO .EQ.0) GOTO 193
      IPOINT=IBRO
      CALL TRSFRM(1)
      GOTO 190
193   CONTINUE
C
C GO BACK TO ITS PREDECESSOR
C
      KP=KP-1
      IF(KP .EQ. 0) GOTO 194
      GOTO 191
194   CONTINUE
      CALL TRSFRM(3)
      RETURN
      SUBROUTINE TRSFRM(LK)
C           ********************
C
C FIND GLOBAL MADADR INDEX FOR V-H COORDINATES AND PID NO%
C
C           ********************
      DATA IP/0/
      IF(LK .EQ. 3) GOTO 666
      LK1=NUMR(IPOINT)   @GLOBAL INDEX
      IDD=MAPADR(LK1)   @MAPADR INDEX FOR LK1
      IF(IDD .EQ. IP) RETURN
      IP=IDD
666   CONTINUE
      CALL PLOTPT(IDD,LK)
      RETURN
      SUBROUTINE LNKOFF(MP)
C           ***********************
C
C DELETE MP AS A SUCCESSOR OF NODE PA
C
C           ********************
      IFRONT=IARRAY(MP,4)  @THE SUCCESSOR BEFORE MP
      IBACK =IARRAY(MP,3)  @THE SUCCESSOR AFTER MP
      IF(IFRONT .NE. 0) GOTO 92
      MPA=IARRAY(MP,5)
      IARRAY(MPA,2)= IBACK  @1ST SUCCESSOR UNDER NEW MPA
      GOTO 99
92    CONTINUE
      IARRAY(IFRONT,3)=IBACK
99    CONTINUE
      IF(IBACK .EQ. 0) RETURN
      IARRAY(IBACK,4)=IFRONT
      RETURN
      SUBROUTINE RSPTST(KKK,LLL,LINMAX,IOK)
C           ********************
C
C TEST RSPONSE TIME, SATISFIED WHEN IOK=1
C
C           ********************
      MDROP=IARRAY(LLL,1)+IARRAY(KKK,1)+2
      TRFIN=ARRAY(LLL,1)+ARRAY(KKK,1)
      TRFOUT=ARRAY(LLL,2)+ARRAY(KKK,2)
      CALL RSPNSE(TRFIN,TRFOUT,LINMAX,MDROP,IOK)
      RETURN
      END
```

@PRT STACOM.IRNOP/0777

```
51928*STACOM(1).IRNOP/0777
      SUBROUTINE IRNOP(NR,LIMIT,TRM)
C                 ********************
C
C     SUBPROGRAM FOR THE INTER-REGION NETWORK OPTIMIZATION
C     LIMIT=MINIMAL NUMBER OF PATHS NEEDED PER REGIONAL
C           SWITCHING CENTER
C
C                 ********************
      PARAMETER NP1=130,NP2=1,NP3=4,NP4=3
      PARAMETER NPC=360, NP6=(NPC*NPC/2-NPC+1)/4+1
      PARAMETER NP7=4, IWT=100, MW=4
      COMMON/CONST/N1,N2,N3,N4,N7,NCITY
      COMMON/LINCHR/LINMIX(NP3),LINCAP(NP3), UTILIZ(NP3)
     * /BCOST/AINSTC(NP2,NP3,NP4,3,2,2),RECRC(NP2,NP3,NP4,3,2,2),
     *  ANSTLN(NP2,NP3,3,2,2),RECRLN(NP2,NP3,3,2,16),IDUPLX(NP3)
     * /NAME/INDXPT(NP1), NAMEST(NP1),LINAME(NP3),NAMEHW(NP4)
     * /EIN/SVR(NP1),NRSC(MW),NUMPR(MW),TRAFON(NP1),TRAFIT(NP1)
     * /REF/IREF(NPC),TRAFD(NP1,2,NP7),DSTNCE(NP6),MAPADR(NP1)
      DIMENSION NETSUM(NP3,2),ORINET(MW,MW,NP3)
      DIMENSION NLINK(NP3),LNKCHW(NP3,NP4,2),LNKCLN(NP3,2)
      INTEGER SUMCST
      INTEGER ORINET
      DIMENSION TRRM(MW,MW),TR(MW,MW)
      INTEGER ORICST,ORICS1,ORICS2
      INTEGER DIVTRI(MW),DIVTRJ(MW)
      DIMENSION TRR(MW,MW),NETCNF(MW,MW,NP3),LINEQU(NP3),
     *  LINADI(NP3),LINADJ(NP3),ILINAD(NP3),JLINAD(NP3),
     *  LINEQ(NP3),LINEQA(NP3),LINEQB(NP3)
      DIMENSION RHOF2(MW,MW)
      DIMENSION TRM(MW,MW)
      EQUIVALENCE (LINEQ,LINEQA),(LINEQU,LINEQB)
C
C RESET UTILIZATION FACTOR TO .5
C
      DO 70 NN1=1,N3
      UTILIZ(NN1)=.5
70    CONTINUE
C
C COMPUTE ORINET(MW,MW,N3) FOR INITIAL TOPOLOGY WHERE N3 IS
C THE NUMBER OF CHARGEABLE ITEMS
C
      ORICST=0
      ORICS1=0
      ORICS2=0
      NR1=NR-1
      DO 203 NN1=1,N3
      DO 203 NN2=1,2
      NETSUM(NN1,NN2)=0 QCOST SUM
203   CONTINUE
C
C MODIFY DUPLEXING MODE FROM HALF TO FULL DUPLEX
C
      DO 667 K1=1,N3
      IDUPLX(K1)=2
667   CONTINUE
      DO 101 I=1,NR1
```

```
      NLINK(I)=NR1  @NR1 LINKS AT THE BEGINNING
      I1=I+1
      DO 102 J=I1,NR
      II=NRSC(I)
      JJ=NRSC(J)
      ATRMAX=AMAX1(TR(I,J), TR(J,I))  @ASSUMMING FULL DUPLEX
      CALL LINNUM (ATRMAX,0.,LINFQ,LINUP,0,RHO)
      RHOF2(I,J)=RHO
      RHOF2(J,I)=RHO
      CALL ICOSTJ(LINEQ,II,JJ, LNKCHW,LNKCLN)
      DO 104 NN=1,N3
      ORINET(I,J,NN)= LINEQ(NN)
      ORINET(J,I,NN)= LINEQ(NN)
      DO 105  NM=1,2    @ LINE COST
      NETSUM(NN,NM)= NETSUM(NN,NM)+ LNKCLN(NN,NM)
      DO 106  NK=1,N4   @ HARDWARE COSTS
      NETSUM(NN,NM)= NETSUM(NN,NM)+ LNKCHW(NN,NK,NM)
106   CONTINUE
105   CONTINUE
104   CONTINUE
102   CONTINUE
101   CONTINUE
      DO 107 K1=1,NR
      DO 107 NN=1,N3
      ORINET(K1,K1,NN)=0
107   CONTINUE
      CALL OUTPRT(1)
      ITALLY=0
999   CONTINUE
      MAXSAV=0
      DO 777  I=1,NR1
      IF (NLINK(I) .LE. LIMIT) GO TO 777
      I1=I+1
      DO 788  J=I1,NR
      IF (NLINK(J) .LE. LIMIT) GO TO 788
      IN=NTEST(ORINET,I,J)
      IF (IN .EQ. 0) GO TO 788  @NO LINK TO BE DELETED
C
C DETERMINE WHETHER THERE IS A LINK CONNECTED BY AT MOST ONE INDIRECT
C ROUTE BETWEEN ANY TWO REGIONS IN THE NETWORK WHEN THE DIRECT LINK
C BETWEEN I AND J IS ELIMINATED. THE INDIRECT LINK ONLY GOES THROUGH
C ONE INTERMEDIATE RSC.
C
      DO 139 L=1,NR1
      L1=L+1
      DO 138 M=L1,NR
      IY=ITEST(I,J,L,M)
      IF (IY .EQ. 1) GO TO 810   @NEXT STEP NOT TO BE TESTED
      IN=NTEST(ORINET,L,M)
      IF (IN .EQ. 1) GO TO 138
810   CONTINUE
      DO 137  N=1,NR
      IF (L .EQ. N) GO TO 137
      IY=ITEST(I,J,L,N)
      IF(IY .EQ. 1) GOTO 137
      IN=NTEST(ORINET,L,N)
      IF (IN .EQ. 0) GO TO 137
```

```
      IY=ITEST(I,J,N,M)
      IF(IY .EQ. 1) GOTO 137
      IN=NTEST(ORINET,M,N)
      IF (IN .EQ. 1) GO TO 138
137   CONTINUE
      GO TO 788
138   CONTINUE
139   CONTINUE
      SDIVTI=0
      SDIVTJ=0
      CALL TRFDIV(IFLOP)
      IF (IFLOP .EQ. 1) GO TO 201
      CALL MINAD(IIAD,MINCST)
      GO TO 202
201   CONTINUE
      CALL NETWKC(MINCST)
202   CONTINUE
      ISAV=ORICST-MINCST
      IF (MAXSAV .GE. ISAV) GO TO 788
      MAXSAV=ISAV
      IFLIP=IFLOP  @IFLIP=GLOBAL INDICATOR
      IF (IFLOP .EQ. 1) GO TO 204
      IIMAX=IIAD
      IMAX=I
      JMAX=J
      DO 666 NN=1,N3
      ILINAD(NN)= LINADI(NN)  @CHANGE OF LINE REQ.
      JLINAD(NN)= LINADJ(NN)
666   CONTINUE
204   CONTINUE
      DO 331  K1=1,NR
      DO 331  K2=1,NR
      TRRM(K1,K2)=TRR(K1,K2)
331   CONTINUE
788   CONTINUE
777   CONTINUE
      IF (MAXSAV .LE. 0) GO TO 9999
      CALL NETUP(IFLIP,IIMAX,IMAX,JMAX)
      ITALLY=ITALLY+1
      GO TO 999
9999  CONTINUE
109   FORMAT(1X,' THIS NETWORK HAS BEEN UPDATED FOR ',I5,' TIMES',//)
      WRITE(6,109) ITALLY
      DO 81 I=1,N3
      DO 81 J=1,2
      NETSUM(I,J)=0
81    CONTINUE
      DO 91 I=1,NR1
      K=I+1
      DO 92 J=K,NR
      DO 93 K1=1,N3
      LINEQ(K1)=ORINET(I,J,K1)
93    CONTINUE
      II=NRSC(I)
      JJ=NRSC(J)
      CALL ICOSTJ(LINEQ,II,JJ,LNKCHW,LNKCLN)
      DO 94 KK=1,N3
```

```
      NETSUM(KK,1)=NETSUM(KK,1)+LNKCLN(KK,1)
      NETSUM(KK,2)=NETSUM(KK,2)+LNKCLN(KK,2)
      DO 95 KL=1,N4
      NETSUM(KK,1)=NETSUM(KK,1) + LNKCHW(KK,KL,1)
      NETSUM(KK,2)=NETSUM(KK,2) + LNKCHW(KK,KL,2)
95    CONTINUE
94    CONTINUE
92    CONTINUE
91    CONTINUE
      ORICS1=0
      ORICS2=0
      CALL OUTPRT(2)
      RETURN
      SUBROUTINE OUTPRT(N)
C           ********************
C
C PRINT OUT INTERREGIONAL NETWORK CONFIGURATION AND ITS COSTS
C
C           ********************
      DO 110 I=1,N3
      ORICS1=ORICS1+NETSUM(I,1)
      ORICS2=ORICS2+NETSUM(I,2)
110   CONTINUE
      NTURN=NR/10+1
      DO 2001 L=1,NTURN
      LL=(NTURN-1)*10 + 1
      LU=NTURN*10
      IF(LU .GT. NR) LU=NR
      IF(N .EQ. 2) GOTO 2100
      WRITE(IWT,2002) (J,J=LL,LU)
2002  FORMAT('1',//,10X,'INITIAL INTERREGIONAL NETWORK CONFIGURATION',
     * ///,20X,10(5X,I3,2X))
      GOTO 2101
2100   CONTINUE
      WRITE(IWT,2102) (J,J=LL,LU)
2102  FORMAT('1',10X,'FINAL OPTIMAL INTERREGIONAL NETWORK CONFIGURATION',
     * ///,20X,10(5X,I3,2X))
2101  CONTINUE
      DO 2003 I=1,NR
      WRITE(IWT,2004) I
2004  FORMAT('  REGION',/,I4)
      DO 2108 M=1,N3
      WRITE(IWT,2008)LINAME(M),(ORINET(I,K,M),K=LL,LU)
2108  CONTINUE
2008  FORMAT((4X,A6,10X,10(5X,I3,2X)))
      WRITE(IWT,2201) (RHOF2(I,J),J=LL,LU)
2201  FORMAT(4X,'LINE UTILIZATION',10(4X,F4.3,2X))
2003  CONTINUE
2001  CONTINUE
      WRITE(IWT,2006)
2006  FORMAT(//,17X,'INST. COST',7X,'RECUR. COST',9X,'SUBTOTAL')
      DO 2005 K=1,N3
      ISUM=NETSUM(K,1)+NETSUM(K,2)
      WRITE(IWT,2007) K,LINAME(K),(NETSUM(K,I),I=1,2), ISUM
2007  FORMAT(//,I5,3X,A6,5X,I6,11X,I6,10X,I8)
2005  CONTINUE
      ORICST=ORICS1+ORICS2
```

```
      WRITE(IWT,2009) ORICS1,ORICS2,ORICST
2009  FORMAT(//,9X,'TOTAL',4X,I7,10X,I7,10X,I8)
      RETURN
      FUNCTION ITEST(I,J,K,L)
C            ********************
C
C TEST EQUIVALENCE BETWEEN SUBSET(I,J) AND SUBSET(K,L)
C
C            ********************
      ITEST=0
      IF (I .EQ. K .AND. J .EQ. L) ITEST=1
      IF (I .EQ. L .AND. J .EQ. K) ITEST=1
      RETURN
      FUNCTION NTEST(NET,I,J)
C            ********************
C
C TEST DIRECT LINE CONNECTIVITY BETWEEN I AND J.
C
C            ********************
      DIMENSION NET(MW,MW,NP3)
      DO 103  I1=1,N3
      IF (NET(I,J,I1) .GT. 0) GO TO 108
103   CONTINUE
      NTEST=0       @ NO CONNECTION
      RETURN
108   NTEST=1
      RETURN        @ YES, THERE IS A CONNECTION
      SUBROUTINE TRFDIV(IFLOP)
C            ********************
C
C DIVERT TRAFFIC BETWEEN I AND J THROUGH OTHER RSCS.
C
C            ********************
C
C IT RETURNS WITH IFLOP=1 WHEN SUCCESSFULL OTHERWISE IFLOP=0.
C IT ALSO CREATES TEMPORARY MATRICES TRR AND NETCNF.
C
      SDIVTI=0. @TOTAL TRAFFIC DIVERTED (I TO J)
      SDIVTJ=0. @TOTAL TRAFFIC DIVERTED (J TO I)
      DO 205  K=1,NR
      DIVTRI(K)=0.  @ TRAFFIC DIVERTED THRU REGION K (I TO J)
      DIVTRJ(K)=0.  @ TRAFFIC DIVERTED THRU REGION K (J TO I)
205   CONTINUE
      DO 220 I1=1,NR
      IF (II.EQ.I.OR.II.EQ.J) GO TO 220
      IC1=NTEST(ORINET,I,I1)
      IC2=NTEST(ORINET,II,J)
      IF(IC1.EQ.0 .OR. IC2.EQ.0) GOTO 220
C
C     DIVERT I TO J TRAFFIC THRU II
C
      DIVTRI(II)=0.
      DIVTRJ(II)=0.
      CALL LINTRF(I,II,A)
      DELTR= A-TR(I,II)
      IF (DELTR.LE.0.0) GO TO 160
C
```

```
      DIVTR=DELTR
      CALL LINTRF(II,J,B)
      DELTR= B-TR(II,J)
      IF (DELTR.LE.0.0) GO TO 160
      DIVTRI(II)= AMIN1(DELTR,DIVTR)
      IF ((DIVTRI(II)+ SDIVTI).GT.TR(I,J))GO TO 140
      SDIVTI= SDIVTI+ DIVTRI(II)
      GO TO 160
C
140   DIVTRI(II)= TR(I,J)- SDIVTI
      SDIVTI= TR(I,J)
C
C     DIVERT J TO I TRAFFIC THRU II
C
160   CONTINUE
      CALL LINTRF(J,II,A)
      DELTR= A-TR(J,II)
      IF (DELTR.LE.0.0) GO TO 220
C
      DIVTR=DELTR
      CALL LINTRF(II,I,B)
      DELTR= B-TR(II,I)
      IF (DELTR.LE.0.0) GO TO 220
      DIVTRJ(II)= AMIN1(DELTR,DIVTR)
      IF ((DIVTRJ(II)+ SDIVTJ) .GT. TR(J,I)) GO TO 180
      SDIVTJ= SDIVTJ+ DIVTRJ(II)
      GO TO 200
C
180   DIVTRJ(II)= TR(J,I)- SDIVTJ
      SDIVTJ= TR(J,I)
C
200   CONTINUE
      IF ((SDIVTI .EQ. TR(I,J)).AND. (SDIVTJ .EQ.TR(J,I)))GO TO 340
220   CONTINUE
      IFLOP=0
      GO TO 360
340   IFLOP=1
360   CONTINUE
C
C CREATE A NEW TRAFFIC MATRIX WHICH ELIMINATES THE TRAFFIC BETWEEN
C NODES I AND J AND A TEMPORARY NETWORK NETCNF FOR THE PURPOSE
C OF COST EVALUATION
C
      DO 191 K1=1,NR
      DO 191 K2=1,NR
      TRR(K1,K2)=TR(K1,K2)
      DO 191 K3=1,N3
      NETCNF(K1,K2,K3)=ORINFT(K1,K2,K3)
191   CONTINUE
      DO 190 KI=1,N3
      NETCNF (I,J,KI)=0
      NETCNF (J,I,KI)=0
      NETCNF (I,I,KI)=0
      NETCNF (J,J,KI)=0
190   CONTINUE
      TRR(I,J)=0
      TRR(J,I)=0
```

```
      DO 380 IK=1,NR
      IF (I .EQ. IK .OR. J .EQ. IK) GO TO 380
      TRR(I,IK)= TR(I,IK)+ DIVTRI(IK)
      TRR(IK,J)= TR(IK,J)+ DIVTRI(IK)
      TRR(J,IK)= TR(J,IK)+ DIVTRJ(IK)
      TRR(IK,I)= TR(IK,I)+ DIVTRJ(IK)
      ATRMAX=AMAX1(TRR(I,IK),TRR(IK,I))
      BTRMAX=AMAX1(TRR(J,IK),TRR(IK,J))
      IDR1=NRSC(I)
      IDR2=NRSC(IK)
      CALL LINNUM(ATRMAX,0.,LINEQ,LINUP,0,RHO)
      RHOF2(I,IK)=RHO
      RHOF2(IK,I)=RHO
      IDR1=NRSC(J)
      CALL LINNUM(BTRMAX,0.,LINEQU,LINUP,0,PHO)
      RHOF2(J,IK)=RHO
      RHOF2(IK,J)=RHO
      DO 430 NN=1,N3
      NETCNF(I,IK,NN)=LINEQ(NN)
      NETCNF(IK,I,NN)=LINEQ(NN)
      NETCNF(IK,J,NN)=LINEQU(NN)
      NETCNF(J,IK,NN)=LINEQU(NN)
430   CONTINUE
380   CONTINUE
      RETURN
      SUBROUTINE LINTRF(I,J,A)
C           ********************
C
C CONVERT LINES INTO TRAFFIC CAPACITIES BETWEEN NODES I AND J.
C
C           ********************
      A=0
      DO 100 IR=1,N3
      A=A+ ORINET(I,J,IR)*LINCAP(IR)*UTILIZ(IR)
100   CONTINUE
      RETURN
      SUBROUTINE NETWKC(SUMCST)
C           ********************
C FIND TOTAL INTERREGIONAL NETWORK COST,SUMCST,BASED ON SPECIFIC
C CONFIGURATION NETCNF
C           ********************
      INTEGER SUMCST
      SUMCST=0
      DO 420 IR=1,NR1
      IR1=IR+1
      DO 400 IK=IR1,NR
      IC=NTEST(NETCNF,IR,IK)
      IF (IC.EQ.0)  GO TO 400
      II=NRSC(IR)
      JJ=NRSC(IK)
      DO 150  III=1,N3
      LINEQU(III)= NETCNF(IR,IK,III)
150   CONTINUE
      CALL TCOSTJ(LINEQU,II,JJ,LNKCHW,LNKCLN)
      DO 501 J1=1,N3
      DO 510 J2=1,2
      DO 520 J3=1,N4
```

```
      SUMCST=SUMCST+LNKCHW(J1,J3,J2)
  520 CONTINUE
      SUMCST=SUMCST+LNKCLN(J1,J2)
  510 CONTINUE
  501 CONTINUE
  400 CONTINUE
  420 CONTINUE
      RETURN
      SUBROUTINE MINAD(IIAD,MINCST)
C           ********************
C
C CAPACITY INCREASE IS REQUIRED WHEN IFLOP=0. AND THE CAPACITY AT
C MAXIMUM COST SAVINGS.
C
C           ********************
      DIMENSION LINDI(NP3),LINDJ(NP3)
      MINCST=0
      RTREI=TR(I,J)-SDIVTI @REMAINING TRAFFIC FROM I TO J
      RTREJ=TR(J,I)-SDIVTJ @REMAINING TRAFFIC FROM J TO I
      DO 500 II=1,NR
      IF(II.EQ.I.OR.II.EQ.J) GO TO 500
      IF(TRR(I,II) .EQ.0. .OR. TRR(II,J) .EQ.0.) GO TO 500
C
C     DETERMINE DELTA COST FOR INCREASED CAPACITY IN ALTERNATE ROUTES
C     LINK (I,II)
C
      AIII=TRR(I,II) + RTREI
      AJII= TRR(II,I) +RTREJ
      AM= AMAX1(AIII,AJII)
      IDR1=NRSC(I)
      IDR2=NRSC(II)
      CALL LINNUM(AM,0.,LINEQA,LINUP,0,RHO)
      DO 151 NN=1,N3
      LINDI(NN)= LINEQA(NN)- NETCNF(I,II,NN)
      NETCNF(I,II,NN)= LINEQA(NN)
      NETCNF(II,I,NN)= LINEQA(NN)
  151 CONTINUE
C
C     LINK(II,J)
C
      BIII=TRR(II,J)+RTREI
      BJII=TRR(J,II)+RTREJ
      BM= AMAX1(BIII,BJII)
      IDR1=NRSC(J)
      CALL LINNUM(BM,0.,LINEQB,LINUP,0,RHO)
      DO 111  NN=1,N3
      LINDJ(NN)= LINEQB(NN)- NETCNF(J,II,NN)
      NETCNF(J,II,NN)= LINEQB(NN)
      NETCNF(II,J,NN)= LINEQB(NN)
  111 CONTINUE
      CALL NETWKC(SUMCST)
      IF (SUMCST.GT.MINCST) GO TO 120
      DO 207 NN=1,N3
      LINADI(NN)= LINDI(NN)
      LINADJ(NN)= LINDJ(NN)
  207 CONTINUE
      IIAD =II
```

```
      MINCST =SUMCST
120   CONTINUE
C
C RESET TO INITIAL NETWORK CONFIGRUATION FOR NEXT TRY
C
      DO 250 NN= 1,N3
      NETCNF(I,II,NN)= NETCNF(I,II,NN)- LINDI(NN)
      NETCNF(II,I,NN)= NETCNF(II,I,NN)- LINDI(NN)
      NETCNF(J,II,NN)= NETCNF(J,II,NN)- LINDJ(NN)
      NETCNF(II,J,NN)= NETCNF(II,J,NN)- LINDJ(NN)
250   CONTINUE
500   CONTINUE
      TRR(I,IIAD)=TRR(I,IIAD)+RTRFI
      TRR(IIAD,J)=TRR(IIAD,J)+RTRFI
      TRR(J,IIAD)=TRR(J,IIAD)+RTRFJ
      TRR(IIAD,I)=TRR(IIAD,I)+RTRFJ
      RETURN
      SUBROUTINE NETUP(IFLIP,IIAD,I,J)
C           ********************
C
C UPDATE THE INTERREGIONAL NETWORK WHEN THERE IS SOME SAVINGS
C
C           ********************
      IF (IFLIP.EQ.1) GO TO 700
C
C     UPDATE THE NETWORK TRAFFIC MATRIX AND
C     UPDATE THE OPTIMAL INTERREGIONAL NETWORK
C
      DO 99  NN=1,N3
      ORINET (I,IIAD,NN)=ORINET(I,IIAD,NN)+ ILINAD(NN)
      ORINET (IIAD,I,NN)=ORINET(IIAD,I,NN)+ ILINAD(NN)
      ORINET (J,IIAD,NN)=ORINET(J,IIAD,NN)+ JLINAD(NN)
      ORINET (IIAD,J,NN)=ORINET(IIAD,J,NN)+ JLINAD(NN)
99    CONTINUE
700   CONTINUE
      DO 701 NN=1,N3
      ORINET(I,J,NN)=0
      ORINET(J,I,NN)=0
701   CONTINUE
C
C     RESET TRAFFIC MATRIX TR(NR,NR)
C
      DO 900 IR= 1,NR
      DO 910 IK= 1,NR
      TR(IR,IK)= TRRM(IR,IK)
910   CONTINUE
900   CONTINUE
C
C UPDATE TOTAL COST FOR OVERALL NETWORK
C
      ORICST=ORICST-MAXSAV
C
C UPDATE NLINK MATRIX
C
      NLINK(I)=NLINK(I)-1
      NLINK(J)=NLINK(J)-1
      RETURN
      END
```

OPRT STACOM.ICOSTJ/0777

```
5192R*STACOM(1).ICOSTJ/0777
      SUBROUTINE ICOSTJ(LINEQU,I,J,LNKCHW,LNKCLN)
C            ********************
C
C CALCULATE INSTALLATION ANNUAL RECURRING COSTS NEEDED FOR
C COMMUNICATION LINK BETWEEN NODES I AND J.  LNKCHW= OTHERS
C LNKCLN= LINES. I AND J ARE GLOBAL INDICE FOR SYSTEM TERMINATIONS
C UNDER CONSIDERATION, LINEQU= LINE CONFIGURATION BETWEEN I AND J
C
C            ********************
      PARAMETER NP1=130,NP2=1,NP3=4,NP4=3,NPC=360
      PARAMETER NP6=(NPC*NPC/2-NPC+1)/4+1
      PARAMETER NP7=4
      DIMENSION LINEQU(NP3), LNKCHW(NP3,NP4,2), LNKCLN(NP3,2)
      COMMON/LINCHR/LINMIX(NP3),LINCAP(NP3),UTILIZ(NP3)
     *   /CONST/N1,N2,N3,N4,N7,NCITY
     *   /BCOST/AINSTC(NP2,NP3,NP4,3,2,2),RECRC(NP2,NP3,NP4,3,2,2),
     * ANSTLN(NP2,NP3,3,2,2), RECRLN(NP2,NP3,3,2,16),IDUPLX(NP3)
     *   /INF/IRATEJ(NP2,NP2),IRAND(NPC,2),IFLAG(NP2,NP3)
     *   /ADD/ IADD(NP1),KCHG,KADD @TERMINALS WITH SAME V=H
     *   /REF/IREF(NPC),TRAFD(NP1,2,NP7),DSTNCE(NP6),MAPADR(NP1)
C
C INITIALIZATION
C
      II=MAPADR(I)
      JJ=MAPADR(J)
      IADDTN=IADD(J)
      DO 100 NL=1,N3
      DO 100 NM=1,2
      LNKCLN(NL,NM)=0
      DO 100 NK=1,N4
      LNKCHW(NL,NK,NM)=0
100   CONTINUE
      KRATEI= IRAND(II,1)    @ RATE STRUCTURE TYPE FOR NODE I
      KRATEJ= IRAND(JJ,1)    @ RATE STRUCTURE TYPE FOR NODE J
      KDENSI= IRAND(II,2)    @ TRAFFIC DENSITY TYPE FOR NODE I
      KDENSJ= IRAND(JJ,2)    @ TRAFFIC DENSITY TYPE FOR NODE J
      KDNSTY= KDENSI+KDENSJ @ ACTUAL DENSITY(2=H-H,1=H-L AND 0=L-L)
      KK=KDNSTY+1  @3=H-H, 2=H-L AND 1=L-L
      DST  = DIST(I,J)  @ DISTANCE BETWEEN NODES I AND J
      IDST=DST
      ITIP=1       @PRIME COST FOR H/W UNIT
      IF(DST .LE. 0.5) ITIP=2      @DISCOUNT COST FOR ADDITIONAL UNIT
      KR    = IRATEJ(KRATEI,KRATEJ) @ ACTUAL RATE STRUCTURE TO BE USED
      DO 1  IL= 1,N3
      IDPX= IDUPLX(IL)       @ DUPLEXING MODE 1=H AND 2=F
      NDV = LINEQU(IL)      @ NUMBER OF LINES REQUIRED
      NDV1=NDV*IADDTN*KADD
C
C CALCULATE COSTS FOR NON-LINE TYPE CHARGES
C
      IF (NDV.EQ.0) GO TO 1 @ NO LINES ARE REQUIRED
      DO 2 IV=1,N4   @HIGH DENSITY RATE
C
C INSTALLATION COSTS FOR NON-LINE TYPE CHARGES
C
      LNKCHW (IL,IV,1)= AINSTC(KR,IL,IV,KK,IDPX,ITIP)*KCHG*NDV
```

```
      1       + AINSTC(KR,IL,IV,KK,IDPX,2)*NDV1
C
C ANNUAL RECURRING COSTS FOR NON-LINE TYPE CHARGES
C
      LNKCHW (IL,IV,2)=( RECRC(KR,IL,IV,KK,IDPX,ITIP)*KCHG*NDV
     1       + RECRC(KR,IL,IV,KK,IDPX,2)*NDV1)*12.
2     CONTINUE
C
C     CALCULATE LINE COSTS
C
      LIN= IFLAG(KR,IL)     @ LINEAR IF 1 AND NONLINEAR OTHERWISE
C
C     ANNUAL LINE INSTALLATION COST
C
      AN=1.
      LNKCLN(IL,1)= ANSTLN(KR,IL,KK,IDPX,2)*AN*NDV
      IF (LIN.NE.1) GO TO 41
C
C     LINEAR LINE RECURRING COST FUNCTION
C
      BN=DST/RECRLN(KR,IL,KK,IDPX,1)
      LNKCLN(IL,2)=  RECRLN(KR,IL,KK,IDPX,2)*BN*NDV*12.
      GO TO 32
41    CONTINUE
C
C     NONLINEAR LINE RECURRING FUNCTION
C
      DO 10 NON=1,8
        NON2=2*NON
        NON1=NON2-1
        COST=RECRLN(KR,IL,KK,IDPX,NON2)
        DT=RECRLN(KR,IL,KK,IDPX,NON1)
        IF (DST.GT.DT) GO TO 51
        LNKCLN(IL,2)= COST*DST*NDV*12+LNKCLN(IL,2)
        GO TO 32
51      CONTINUE
        LNKCLN (IL,2)= COST*DT*NDV*12+LNKCLN(IL,2)
        DST=DST-DT
10    CONTINUE
32    CONTINUE
1     CONTINUE
      KCHG=1
      KADD=1
      RETURN
      END
```

```
@PRT STACOM.RHOFUN/0777
```

```
5192B*STACOM(1),RHOFUN/0777
      SUBROUTINE RHOFUN(T1,T2,LINEQU,LNLMT,RHOLIN,RHO)
C            ********************
C
C CALCULATE LINE UTILIZATION
C        T1= LINT TO SWITCHER TRAFFIC
C        T2= SWITCHER TO LINE TRAFFIC
C     LNLMT= HIGHEST LINE TYPE
C    LINEQU= LINE CONFIGURATION
C
C            ********************
      PARAMETER NP3=4
      COMMON/LINCHR/ LINMIX(NP3),LINCAP(NP3),UTILIZ(NP3)
     *   /CONST/ N1,N2,N3,N4,N7,NCITY
     *   /SUM/ASUM(4),BSUM
     *   /XMT/ TIMXMT(7,NP3),WAIT(6)
     *   /MSLA/ AMSL(7)
      DIMENSION LINEQU(1),RHOLIN(1)
      RHO=0.
      CAP=0.
      DO 8 N=1,N3
      CAP=CAP+LINEQU(N)*LINCAP(N)
8     CONTINUE
      CN=LINCAP(LNLMT)/CAP  @NORMALIZATION FACTOR
      XSAC1=CN*T2*ASUM(3)/(BSUM*AMSL(5)*B.) @OUTPUT WITH PRIO 1
      XSAC2=0.
      IF(AMSL(6) .EQ. 0.) GOTO 1201
      XSAC2=CN*T2*ASUM(4)/(BSUM*AMSL(6)*B.) @OUTPUT WITH PRIO 2
120)  CONTINUE
      XSAC3=CN*T1/(AMSL(4)*B.) @INPUT TRFFIC IN TRANS
      RHOLIN(1)=XSAC1*TIMXMT(5,LNLMT)
      RHOLIN(2)=XSAC2*TIMXMT(6,LNLMT)
      RHOLIN(3)=XSAC3*TIMXMT(4,LNLMT)
      RHO=RHOLIN(1)+RHOLIN(2)+RHOLIN(3)
      RETURN
      END

@PRT STACOM.LINNUM/0777
```

```
51928*STACOM(1).LINNUM/0777
      SUBROUTINE LINNUM(T1,T2,LINEQU,LNLMT,JFLAG,RHO)
C            ********************
C
C FIND LINE CONFIGURATION BASED ON THE GIVEN TRAFFIC AND
C APPLICABLE LINE TYPE
C        JFLAG= 1 FOR MULTIDROP LINE CASE
C           T1= LINE TO SWITCHER TRAFFIC
C           T2= SWITCHER TO LINE TRAFFIC
C
C            ********************
      PARAMETER NP3=4
      COMMON/LINCHR/ LINMIX(NP3),LINCAP(NP3),UTILIZ(NP3)
     *   /CONST/ N1,N2,N3,N4,N7,NCITY
     *   /MSLA/ AMSL(7)
      INTEGER TRAF
      DIMENSION LINEQU(1),RHOLIN(3)
      TRAF=T1+T2
      DO 1 I=1,N3
      LINEQU (I)=0
1     CONTINUE
      LNLMT=0
      CALL REFER
      LNLMTU=LNLMT
C
C SET UP INITIAL LINE CONFIGURATION
C
      IF(JFLAG .EQ. 1) GOTO 10
3     CONTINUE
      LINEQU(LNLMT)=LINEQU(LNLMT)+1
      LCAP=LINCAP(LNLMT)*UTILIZ(LNLMT)
      IF(TRAF.LT.LCAP) GOTO 7
      TRAF=TRAF-LCAP
      CALL REFER
      GOTO 3
10    CONTINUE
      LINEQU(LNLMT)=TRAF/(LINCAP(LNLMT)*UTILIZ(LNLMT))+1
7     CONTINUE
70    CONTINUE
      CALL RHOFUN(T1,T2,LINEQU,LNLMTU,RHOLIN,RHO)
      IF(RHO .LT. UTILIZ(LNLMT)) GOTO 150
      IF(LNLMTU.NE.N3) GOTO 72
      IF(JFLAG.NE.1) GOTO 73
      LINEQU(N3)=LINEQU(N3)+1  @ NEEDED TO BE MODIFIED
      GOTO 70
73    CONTINUE
      DO 2 N=1,N3
        IF(LINEQU(N) .NE. 0) GOTO 20
2     CONTINUE
20    CONTINUE
      NL=N
      IF(NL.EQ.N3) GOTO 74
      LINEQU(NL)=0
22    CONTINUE
      NL=NL+1
      IF(LINMIX(NL).EQ.0) GOTO 22
      LINEQU(NL)=LINEQU(NL)+1
```

```
      GOTO 70
74    CONTINUE
      LINEQU(1)=1
      GOTO 70
72    CONTINUE
      LINEQU(LNLMTU)=0
      LNLMTU=LNLMTU+1
      IF(LINMIX(LNLMTU).EQ.0) GOTO 72
      LINEQU(LNLMTU)=1
      GOTO 70
150   CONTINUE
      LNLMT=LNLMTU
      RETURN
      SUBROUTINE REFER
C
C FIND THE UPPER LIMIT OF LINE TYPE ALLOWED
C
      DO 14 NN=1,N3
        LTRAF=TRAF/UTILIZ(NN)+0.5
        IF(LINMIX(NN) .EQ.0) GOTO 14
        LNLMT=NN
        IF(LINCAP(NN) .GT. LTRAF) GOTO 15
14    CONTINUE
15    CONTINUE
      RETURN
      END
```

OPRT STACOM.PACK/0777

```
5192A*STACOM(1).PACK/0777
      COMPILER (FLD=ABS)
      SUBROUTINE PACK(I,K,L,IA)
C           ********************
C
C RETRIEVE/STORE DATA FROM/INTO ARRAY IA
C L=1 FOR STORING AND L=2 FOR RETRIEVAL
C K= DISTANCE DATA CONCERNED
C
C           ********************
      DIMENSION IA(1)
      IQ=(I-1)/4 @THE WORD LOCATION
      IR=I-IQ*4   @THE QUARTER CONCERNED
      IQ=IQ+1
      IS=(IR-1)*9
      IF(L.EQ.1) GOTO 10
C
C RETRIEVE IT(9 BITS) BEGINNING AT IS-TH BIT OF THE IQ-TH WORD
C
      K=FLD(IS,9,IA(IQ))
      RETURN
C
C STORE IT(9 BITS) BEGINNING AT IS-TH BIT OF THE IQ-TH WORD
C
10    CONTINUE
      FLD(IS,9,IA(IQ))=K
      RETURN
      END

@PRT STACOM.DIST/0777
```

```
51928*STACOM(0).DIST/0777
      1            FUNCTION DIST(I,J)
      2      C           ********************
      3      C
      4      C FIND DISTANCE BETWEEN I AND J
      5      C
      6      C           ********************
      7            PARAMETER NP1=130,NPC=360
      8            PARAMETER NP6=(NPC*NPC/2-NPC+1)/4+1
      9            PARAMETER NP7=4
     10            COMMON /REF/IREF(NPC),TRAFD(NP1,2,NP7),
     11           *            DSTNCE(NP6),MAPADR(NP1)
     12            INTEGER DSTNCE
     13            DIST=0.
     14            IF(I.EQ.J) RETURN
     15            II=MAPADR(I)  @ACTUAL CITY INDEX
     16            JJ=MAPADR(J)
     17            IF(II.EQ.JJ) RETURN
     18            IJL=LINK(II,JJ)
     19            CALL PACK(IJL,IDIST,2,DSTNCE)
     20            DIST=IDIST
     21            IF(IDIST .NE. 511) RETURN
     22            DIST=RECOVR(IJL)
     23            RETURN
     24            END

@PRT L.LINK/0777
```

```
51928*STACOM(0),LINK/0777
      FUNCTION LINK(J,K)
C            ********************
C
C FIND THE RELATIVE LOCATION FOR (J,K) COMBINATION
C WHICH IS THEN USED FOR FINDING DISTANCE BETWEEN SYSTEM
C TERMINATIONS J AND K
C
C            ********************
      PARAMETER  NP1=130,NPC=360
      PARAMETER NP6=(NPC*NPC/2-NPC+1)/4+1
      PARAMETER NP7=4,NP3=4
      COMMON /CONST/ N1,N2,N3,N4,N7,NCITY
     1  /REF/IREF(NPC),TRAFD(NP1,2,NP7),DSTNCE(NP6),MAPADR(NP1)
      INTEGER DSTNCE
      LINK=0
      IF(J.GT.NCITY.OR.K.GT.NCITY.OR.K.EQ.J) RETURN
      JJ=J
      KK=K
      IF(J.LT.K) GOTO 1
      JJ=K
      KK=J
1     CONTINUE
      LINK=(JJ-1)*NCITY + KK - IREF(JJ)
      RETURN
      END

@PRT L,RECOVR/0777
```

```
51928*STACOM(0),RECOVR/0777
      FUNCTION RECOVR(I)
C            ********************
C
C RETRIEVE OVERFLOW DISTANCE DATA FROM IVRD
C
C            ********************
      PARAMETER NPC=360,NPO=10*NPC
      COMMON /OVER/ IVRD(NPO,2),IOVER1
      DO 10 N=1,IOVER1
      IF(I .EQ. IVRD(N,1)) GOTO 20
10    CONTINUE
      WRITE(6,99) I
99    FORMAT(1X,' NO OVERFLOW DATA HAS BEEN FOUND ',
     *    'FOR LOCAL INDEX',2I6)
      STOP
20    CONTINUE
      RECOVR=IVRD(N,2)
      RETURN
      END

QPRT L.PLOTPT/0777
```

```
51928*STACOM(0).PLOTPT/0777
      SUBROUTINE PLOTPT(L1,L3)
C           ********************
C
C SUBROUTINE FOR MOVING CALCOMP PEN WITH OR WITHOUT PEN DOWN
C   L3=1 FOR MOVING WITH PEN DOWN
C     =2 FOR MOVING WITH PEN UP
C     =3 FOR CLOSING THE PLOTTING
C
C           ********************
      PARAMETER NPC=360
      COMMON/VH/IVERT(NPC),IHORZN(NPC)
      DIMENSION IBUF(1000)
      DATA IP/0/  QFLAG FOR PLOTS CALL
      DATA X/1.2566/
      IF(IP .NE. 0) GOTO 50
      CALL PLOTS
50    CONTINUE
      IF(L3 .EQ. 3) GOTO 100   QPLOTTING IS TO BE CLOSED
      AV=IVERT(L1)
      AH=IHORZN(L1)
      BV=AV*COS(X)+AH*SIN(X)
      BH=AV*SIN(X)-AH*COS(X)
      BH=(8300.-BH)/301.
      BV=(BV-5500)/301.
      IF(L3 .EQ. 2) GOTO 80
      CALL SYMBOL(BH,BV,0.025,4,0.,-2)  QPEN IS DOWN
80    CONTINUE
      CALL PLOT(BH,BV,3)  QPEN IS UP
      IP=1    QPLOTS CALL IS NOT NEEDED ANY MORE
      RETURN
100   CONTINUE
      CALL PLOT(10.,0.,999)
      RETURN
      END

QPRT L.RSPNSE/0777
```

```
5192A*STACOM(0),RSPNSE/0777
      SUBROUTINE RSPNSE(T1,T2,LINTYP,M,IOK)
C            ********************
C
C CALCULATE MEAN RESPONSE TIME FOR THE PROPOSED MULTIDROP LINE
C
C WAIT(6)=ITEMIZED DELAYS DUE TO
C     1=WAIT FOR POLLING     2=WAIT FOR I/O       3=INPUT XMT TIME
C     4=CPU TURNAROUND       5=OUTPUT QUEUE WAIT 6=OUTPUT XMT TIME
C
      PARAMETER NP3=4
      COMMON/RESP/ RHOLIN(4),RSPTIM
     1   /XMT/ TIMXMT(7,NP3), WAIT(6)
     2   /BOUND/ NTERMS,TIMREQ,MPROC,MPLOT
     3   /CONST/N1,N2,N3,N4,N7,NCITY
      DIMENSION LDUMMY(NP3)
      DO 10 N=1,N3
        LDUMMY(N)=0
10    CONTINUE
      LDUMMY(LINTYP)=1
      IOK=0
C
      CALL RHOFUN(T1,T2,LDUMMY,LINTYP,RHOLIN,RHO)
      RHOLIN(4)=1.-RHO
      IF(RHOLIN(4) .LE. 0.) RETURN
      WAIT(1)=(TIMXMT(1,LINTYP)+TIMXMT(2,LINTYP))*(M-1)/2
      WAIT(2)=(1.-RHOLIN(4))*TIMXMT(7,LINTYP)/((1-RHOLIN(1))-
     1         RHOLIN(2))*RHOLIN(4))
      WAIT(3)=TIMXMT(3,LINTYP)
      WAIT(5)=(1.-RHOLIN(4))*TIMXMT(7,LINTYP)/(1-RHOLIN(1))
      WAIT(6)=TIMXMT(5,LINTYP)
      RSPTIM=0.
      DO 11 J=1,6
        RSPTIM=WAIT(J)+RSPTIM
11    CONTINUE
      IF(RSPTIM .GT. TIMREQ) RETURN
      IOK=1    @RESPONSE TIME CRITERION IS SATISFIED
      RETURN
      END

@PRT L.INPUT/0777
```

APPENDIX B

GLOSSARY

AT&T	American Telephone and Telegraph Company
@RUN, etc.	Control statements under EXEC 8 system (of the UNIVAC computer system)
BPS	Bits per second
CalComp	CALifornia COMputer Products
Central Link	The direct link between a computer and a remote terminal
Centroid	The geographical center of a set of system terminations
Communication Network	A network with several terminals connected by a set of communication channels
Communication Protocol	The system used for performing interfacing (hand-shaking) between a computer and a remote terminal
CPU	Central Processing Unit
Data Base	A collection of cross-referenced set of files which allows systematic data filing and retrieval by a digital computer
D Bank	Storage area for data under EXEC-8 system of the UNIVAC Computer System.
Drop	A chargeable item associated with each terminal on a multidrop line
EXEC-8	UNIVAC 1100 series executive system
FORTRAN	FORmula TRANslator
FORTRAN V	A FORTRAN type of high level language which is only applicable in UNIVAC computers
I Bank	Storage area for program instructions under EXEC 8 system of the UNIVAC Computer System
ID	IDentification
Line Utilization	The ratio of traffic on a line to the line capacity

MPL	Multischedule Private Line, one of the interstate tariffs used by AT&T
Multidrop Line	A communication line which has more than one terminal and is connected to a data processing system
Multidrop Network	A communication network where one or more lines are multidrop lines
PUNCH$, etc.	System designated file name for punch card output, etc.
Regional Network	A network which connects all terminals in a given region
Regional Switching Center (RSC)	A regional data processing center which is used to provide the message switching capability for all terminals in the region
STACOM	STAte Criminal Justice COMmunication Project
Star Network	A communication network where each system termination is directly connected to the central data processing system
SUP-Time	A run time estimate by the EXEC-8 accounting subsystem which accounts for the amount of time spent by a run on usage of CPU, I/O processing and execution of system control statements and executive requests
System Termination	A logical node in the communication system under the STACOM program, which consists of one or more physical terminals
TELPAK	A specific tariff for a telecommunication network
Terminal	A device that allows users of a data processing system to gain access to that system in a more convenient manner than the input/ output devices local to that system
Terminal Response Time	The duration from the time a user initiates a request for network service at the terminal to the time he receives a complete response
Tree	A graph which has a root node without any predecessors and other nodes have unique predecessors

UNIVAC	UNIVersal Automatic Computer, a computer trade name by Sperry Rand Corporation
Vertical Horizontal (V-H) Coordinates	A pair of numbers which are designated by AT&T for cities and used for the purpose of calculating distance between any two cities