General Disclaimer

One or more of the Following Statements may affect this Document

- This document has been reproduced from the best copy furnished by the organizational source. It is being released in the interest of making available as much information as possible.

- This document may contain data, which exceeds the sheet parameters. It was furnished in this condition by the organizational source and is the best copy available.

- This document may contain tone-on-tone or color graphs, charts and/or pictures, which have been reproduced in black and white.

- This document is paginated as submitted by the original source.

- Portions of this document are not fully legible due to the historical nature of some of the material. However, it is the best reproduction available from the original submission.

Produced by the NASA Center for Aerospace Information (CASI)

NASA CASE NO. NPO-13999-1

PRINT FIG. 1

NOTICE

The invention disclosed in this document resulted from research in aeronautical and space activities performed under programs of the National Aeronautics and Space Administration. The invention is owned by NASA and is, therefore, available for licensing in accordance with the NASA Patent Licensing Regulation (14 Code of Federal Regulations 1245.2).

To encourage commercial utilization of NASA-owned inventions, it is NASA policy to grant licenses to commercial concerns. Although NASA encourages nonexclusive licensing to promote competition and achieve the widest possible utilization, NASA will consider the granting of a limited exclusive license, pursuant to the NASA Patent Licensing Regulations, when such a license will provide the necessary incentive to the licensee to achieve early practical application of the invention.

Address inquiries and all applications for license for this invention to NASA Resident Legal Office, NASA Patent Counsel, Mail Code 180-601, 4800 Oak Grove Drive, Pasadena, California, 91103. Approved NASA forms for application for nonexclusive or exclusive license are available from the above address.

MAR 1978
RECEIVED

(NASA-Case-NPO-13999-1) OVER-UNDER DOUBLE-PASS INTERFEROMETER Patent Application (NASA) 12 p HC A02/MF A01 CSCL 14B

NRLO
N78-18395

Unclas
G3/35 08496

AWARDS ABSTRACT

Inventor: Rudolf A. Schindler

Contractor: Jet Propulsion Laboratory

NASA Case No. NPO-13999
JPL Case No. 13999
September 10, 1977

OVER-UNDER DOUBLE-PASS INTERFEROMETER

The invention relates to interferometers utilizing double-pass retroreflectors, and more particularly to a new structure of the beamsplitter and an over-under mode of operation for the retroreflected beam paths.

The beamsplitter 10 is shown in FIG. 1 standing on end in the plan view of an interferometer embodying the invention. The face of the beamsplitter is shown in FIG. 2 as having a beamsplitting surface 10b in the middle to split infrared light from a source 11 into two beams in the usual manner. A mirror 12 directs one beam into a cat's-eye retroreflector 13 disposed in a position parallel to a second cat's-eye retroreflector 14. That is for convenience only, although having included the mirror 12, it may be used for making small, mid-frequency changes in the path length of one beam. The retroreflector 13 is oriented to return the beam through it in a path directly above its input path. Consequently the upper part of the beamsplitter is provided as a transparent window 10a as shown in FIG. 2. The retroreflector 14 is oriented to return the beam through it in a path directly below its input path. Consequently, the lower part of the beamsplitter is provided with a reflective surface 10c as shown in FIG. 2. The beam thus split and retroreflected is combined through a mirror 15 having a transparent window (or hole) 15a as shown in FIG. 3. The upper and lower portions 15b and 15c of the mirror 15 have reflective coatings, the top (15b) to return the beam to the retroreflector 13, and the bottom (15c) to return the beam to the retroreflector 14. FIGs. 4 and 5 are cross sections of the respective retroreflectors 13 and 14 showing the beams in dotted lines. The respective input beams to the retroreflectors 13 and 14 are identified as A_1 and A_2, and the respective output beams are identified as B_1 and B_2. The over-under double-pass beam paths may be better understood from the isometric diagram of the beam paths shown in FIG. 6.

The novelty of the invention is the new structure of the beamsplitter and the over-under mode of operation of the retroreflectors. The advantage is that the beamsplitter area and thickness can be reduced to conform only with optical flatness considerations, as compared to the beamsplitter configurations required in the side-by-side mode of operation of the retroreflectors disclosed in U.S. patent 3,809,481 by the same inventor.

Serial No. 858,596
Filing Date 12-08-77

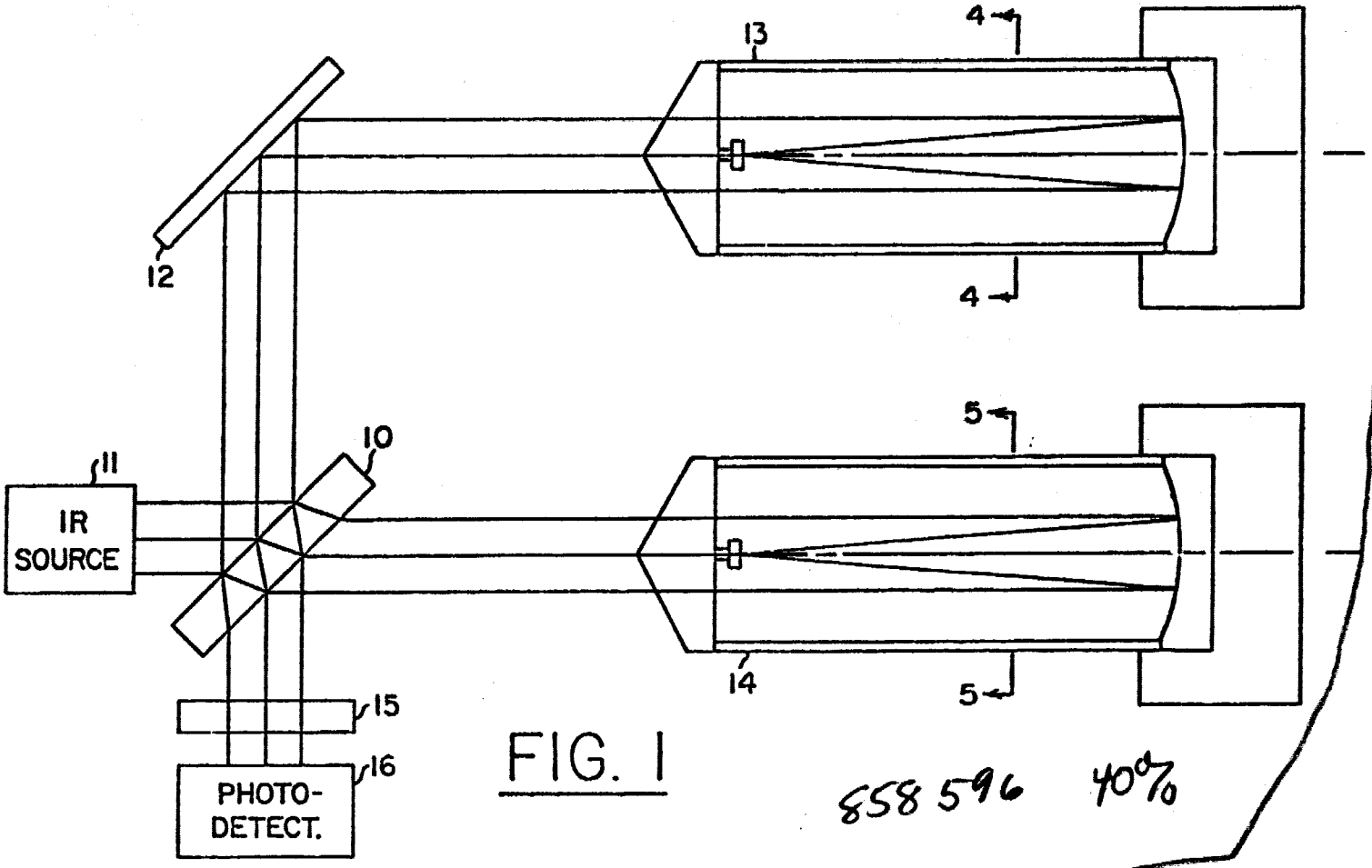

FIG. 1

858 596 40%

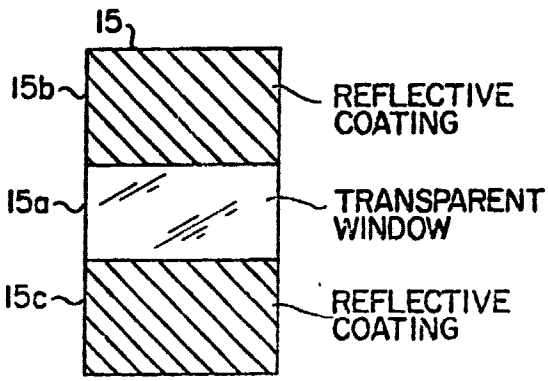

FIG. 3

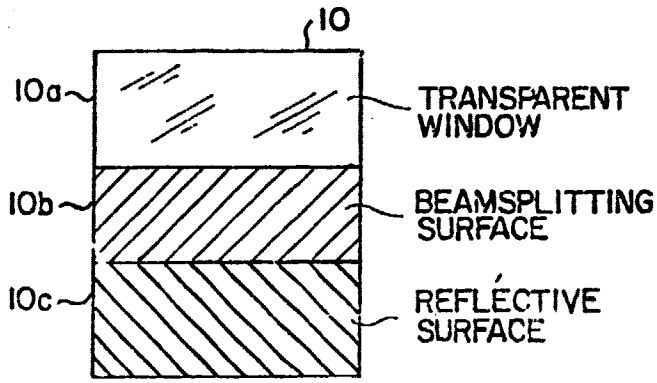

FIG. 2

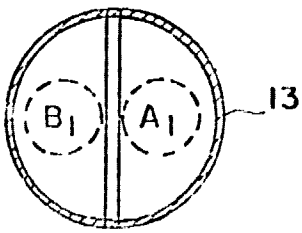

FIG. 4

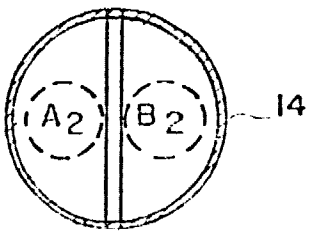

FIG. 5

FIG. 6

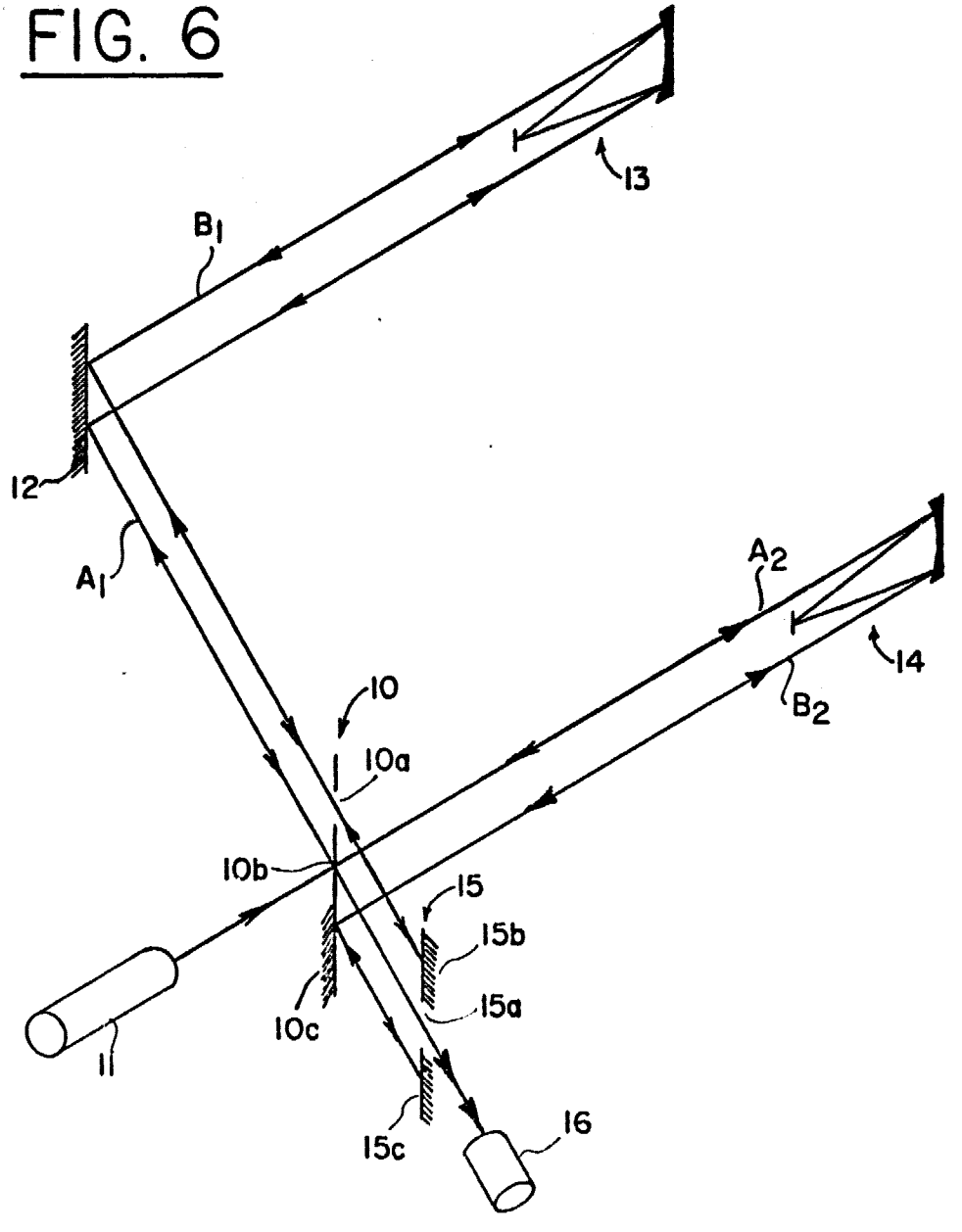

SPECIFICATION

TO ALL WHOM IT MAY CONCERN:

BE IT KNOWN THAT RUDOLF A. SCHINDLER, a citizen of the United States, residing at 452 E. Sierra Madre Boulevard, Sierra Madre, in the County of Los Angeles, State of California, has invented a new and useful

OVER-UNDER DOUBLE-PASS INTERFEROMETER

of which the following is a specification:

ABSTRACT OF THE DISCLOSURE

An over-under double-pass interferometer in which the beamsplitter area and thickness can be reduced to conform only with optical flatness considerations is achieved by offsetting the optical center line of one cat's-eye retro-reflector relative to the optical center line of the other in order that one split beam be folded into a plane distinct from the other folded split beam. The beamsplitter is made transparent in one area for a first folded beam to be passed to a mirror for doubling back and is made totally reflective in another area for the second folded beam to be reflected to a mirror for doubling back. The two beams thus doubled back are combined in the central, beam-splitting area of the beamsplitter and passed to a detector. This makes the beamsplitter insensitive to minimum-thickness requirements and selection of material.

Serial No. 858,596
Filing Date December 8, 1977
Contractor Caltech/JPL
Contract No. NAS7-100
Pasadena CA 91125
(City) (State) (Zip)

TO HAVE

The invention described herein was made in the performance of work under a NASA contract and is subject to the provisions of Section 305 of the National Aeronautics and Space Act of 1958, Public Law 85-568 (72 Stat. 435; 42 USC 2457).

BACKGROUND OF THE INVENTION

This invention relates to interferometers, and more particularly to interferometers utilizing double-pass retroreflectors.

In a Fourier interference spectrometer of the double-pass "cat's-eye" retroreflector type, a single mirror is employed in the path of both split beams of an incoming ray to cause them to double back through separate retro-reflectors, as shown in U.S. patent 3,809,481 by the same inventor. Changes in optical path length are achieved by linear displacement of both retroreflectors using a motor-driven lead screw on one for large, low-frequency changes, a moving-coil actuator on the other for smaller, mid-frequency changes and a piezoelectric actuator on one of these two for small, high-frequency changes. Alternatively, one of the retroreflectors may be fixed in space while the other is displaced for large, low-frequency changes. The optical axis of the movable retroreflector is then made parallel to the optical axis of the first retroreflector by using a mirror at a 45° angle of incidence. This mirror may then be displaced in a direction normal to its reflecting surface for smaller mid-frequency changes. A piezoelectric actuator

on one of the retroreflectors is used for smaller high frequency changes as before. In either case, a "cubic" beamsplitter must be fabricated with precision to form two plane mirrors on the outside normal to the incident retroreflected beams, or a beamsplitter according to the aforesaid U.S. patent must be employed. However, even a "thick" beam splitter according to that invention involves a cost significantly greater than if a "thin" beamsplitter were used. Therefore, an object of this invention is to provide an arrangement for an interferometer utilizing double-pass retroreflectors that will permit using a beamsplitter reduced in thickness to conform only with considerations of optical flatness.

SUMMARY OF THE INVENTION

In accordance with this invention, the spatial reflection orientation of cat's-eye retroreflectors in a double-pass interferometer is so arranged that one cat's-eye retroreflector is in a plane offset from the other cat's-eye retroreflector in order that the double-pass retroreflected beams combine. To accomplish that, the axes of the two double-pass retroreflected output beams coincide in a plane between the single-pass reflected beams of the two retroreflectors. Thus, the input beam, A_1, of one cat's-eye retroreflector emerges as a single-pass output beam, B_1, offset in one direction. Upon being reflected for the second pass, the beam emerges from the one cat's-eye retroreflector on the axis of the input beam, A_1. The input beam A_2 of the other cat's-eye retroreflector emerges as a single pass output beam B_2 offset in a direction opposite the one direction because the other cat's-eye retroreflector is oppositely offset.

Upon being reflected for the second pass, the beam emerges from the other cat's-eye retroreflector on the axis of the input beam A_2. The beamsplitter need only split the original beam from the source into the beams A_1 and A_2 with virtually the same axis, so that the emerging double-pass beams can recombine. Consequently, the beamsplitter thickness can be reduced to conform only with optical flatness.

The novel features that are considered characteristic of this invention are set forth with particularity in the appended claims. The invention will best be understood from the following description when read in connection with the accompanying drawings.

DESCRIPTION OF THE DRAWINGS

FIG. 1 is a plan view of the optical configuration of an over-under double-pass interferometer embodying the present invention.

FIG. 2 is a front elevation view of a beamsplitter in the optical configuration of FIG. 1.

FIG. 3 is a front elevation view of a fixed reflecting mirror used to double back split beams in the optical configuration of FIG. 1, and to pass the combined beams at the output of the interferometer to a photodetector.

FIG. 4 is a sectional view taken along a line 4-4 in FIG. 1 to show the under and over paths of the retroreflected beam on one side of the beamsplitter.

FIG. 5 is a sectional view taken along a line 5-5 in FIG. 1 to show the over and under paths of the retroreflected beam on the other side of the beamsplitter.

FIG. 6 is an isometric diagram of the over-under double-pass beam paths in the optical configuration of FIG. 1.

DESCRIPTION OF PREFERRED EMBODIMENTS

Referring now to the drawings, a plan view is shown schematically in FIG. 1 of a high-speed double-pass interferometer very similar to that shown in the aforesaid patent 3,809,481, but with the improvement of a beamsplitter 10 having an area and thickness reduced to conform only with optical flatness considerations. That patent discloses a Fourier interference spectrometer of the double-pass retro-reflector type in which a single mirror is employed in the path of both split beams of an incoming beam to cause them to double back through separate retroreflectors. Changes in optical path length are achieved by linear displacement of both retroreflectors using a motor-driven lead screw on one for large, low-frequency changes, a moving-coil actuator on the other for smaller, mid-frequency changes and a piezoelectric actuator on one of these two for small, high-frequency changes. Different arrangements are disclosed for the beamsplitter to function as a splitter for the incoming beam, a "window" for one split beam and a mirror at 45° with the beamsplitter for the other reflecting beam. A problem with that arrangement was that both retroreflected beams were reflected by the same mirror at 45° with the beam splitter so that while one split beam is reflected by a reflective surface on the beamsplitter, the other split beam needed to be displaced so as to pass through the window onto the mirror. That required special design considerations for the beamsplitter beyond just optical

flatness. The present invention offsets the axis of one retroreflector from the other so that while both receive split beams in a common plane, one retroreflects in a plane offset in one direction while the other retroreflects in a plane in the opposite direction. An advantage of this is that it reduces cost and improves the latitude of selection of materials for the beamsplitter.

A beamsplitter 10 shown in a plan view (i.e., standing on end) is divided into three horizontal areas as shown in an elevation view in FIG. 2, a top area 10a that is clear to provide a transparent window, a central area 10b that is 50% coated to provide an IR beamsplitting surface, and a bottom area to provide a reflective surface. The beam from the source 11 is directed at the beamsplitting surface to provide two beams A_1 and A_2 illustrated schematically in FIG. 6. The first beam A_1 is directed to a mirror 12 which reflects the beam into a cat's-eye retroreflector 13. This "corner" mirror is useful not only to so fold the path of the beam A_1 that the retroreflector 13 is disposed adjacent a cat's-eye retroreflector 14, for convenient packaging, but also to provide a way of making small, mid-frequency changes in the path length of the beam A_1. However, that is not essential, since the present invention can be practiced in the interferometer arrangement of the aforesaid patent, or with the mirror 12 at some other angle.

The beam A_1 enters the retroreflector at one (lower) level, and exits at another (upper) level as a beam B_1 in the manner shown in FIG. 6. The beam B_1 is reflected by the mirror 12 to the beamsplitter 10 where it passes through the transparent upper area 10a of the beamsplitter onto a

mirror 15 which has a reflective coating on an upper area 15b to reflect the beam B_1, thereby to cause it to double back through the central area 10b of the beamsplitter and through the transparent central area 15a of the mirror 15. The beam A_1 which has thus doubled back is passed to a photodetector 16. That beam is to be combined with the beam A_2 similarly doubled back, but instead of doubling back through an optional path over the path for the beam A_2, as in the case of the beam A_1, that beam doubles back through a path under the path for the beam A_2, as shown in FIG. 6.

The beamsplitter 10 shown at a 45° angle for convenience may be placed at some other angle for optical considerations. It transmits 50% of the input beam from the source 11 to the cat's-eye retroreflector 14. That is accomplished by the central area 10b of the beamsplitter as shown in FIG. 2. The retroreflector 14 has its optical axis offset from the optical axis of the retroreflector 13 in a vertical direction, i.e., normal to the plane of the drawing of FIG. 1. This causes the beam B_2 to be reflected from the lower area 10c of the beamsplitter 10 shown in FIG. 2. and onto the lower area 15c of the mirror 15. From there it doubles back, emerging from the retroreflector 14 over the path of the beam A_2 to impinge the beamsplitter 10 in the central area 10b. There the back side of the beamsplitting surface reflects the beam A_2, thereby to combine the beams A_1 and A_2 passing through the transparent window 15a into the photo detector 16.

This novel arrangement for an over-under double-pass interferometer utilizing a flat thin plate as a beamsplitter is better understood from FIGs. 4 and 5, which are sectional views of the retroreflectors 13 and 14 taken

along respective lines 4-4 and 5-5. FIG. 4 shows the split beam A_1 at the bottom and the retroreflected beam B_1 emerging at the top. The top is shown on the left in FIG. 4 because it is a section taken on a line in the plan view of FIG. 1 looking to the left. Similarly, FIG. 5 shows the split beam A_2 at the top and the retroreflected beam B_2 emerging at the bottom. This entire arrangement is then fully clarified by the schematic diagram of FIG. 6 referred to hereinbefore wherein all of the elements referred to in FIGs. 1 to 3 are identified by the same reference numerals.

Although a particular embodiment of the invention has been described using vertical reflection orientation in the cat's-eye retroreflectors, such that one retroreflector has its optical center line offset vertically with respect to the optical center line of the other, it is recognized that modifications and equivalents may readily occur to those skilled in the art and consequently it is intended that the claims be interpreted to cover such modifications and equivalents. For example, in place of a transparent area in the mirror 15, there may be a smaller mirror in front at an angle to reflect the combined beam off to one side for detection, or a hole, preferably a circular hole in the mirror 15. In any case the beamsplitter area and thickness can be reduced to conform only with optical flatness considerations which require a ratio of thickness to length of about 1 to 7, or 8. For example, a beamsplitter 4" long would have to be about 1/4" thick to assure optical flatness. The beamsplitting surface and reflective surface are on the same face of the plate. Typical materials for the beamsplitter are borium fluoride for wavelengths from visible light to about 11.5 microns and potassium bromide for wavelengths from visible light to about 16 microns.