General Disclaimer

One or more of the Following Statements may affect this Document

- This document has been reproduced from the best copy furnished by the organizational source. It is being released in the interest of making available as much information as possible.

- This document may contain data, which exceeds the sheet parameters. It was furnished in this condition by the organizational source and is the best copy available.

- This document may contain tone-on-tone or color graphs, charts and/or pictures, which have been reproduced in black and white.

- This document is paginated as submitted by the original source.

- Portions of this document are not fully legible due to the historical nature of some of the material. However, it is the best reproduction available from the original submission.

Produced by the NASA Center for Aerospace Information (CASI)

FEBRUARY, 1978

REPORT ESL-R-803

Research Supported By:
NASA/Ames #NGL-22-009-124

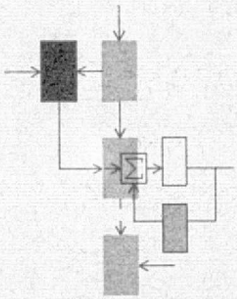

DESIGN OF A COMPENSATOR FOR AN A.R.M.A. MODEL OF A DISCRETE TIME SYSTEM

(NASA-CR-156097) DESIGN OF A COMPENSATION FOR AN ARMA MODEL OF A DISCRETE TIME SYSTEM M.S. Thesis (Massachusetts Inst. of Tech.) 99 p HC A05/MF A01 CSCL 12A
N78-21838
Unclas
G3/64 12370

Carlos I. Mainemer

APR 1978
RECEIVED
NASA STI FACILITY

Electronic Systems Laboratory
MASSACHUSETTS INSTITUTE OF TECHNOLOGY, CAMBRIDGE, MASSACHUSETTS 02139

February, 1978 Report ESL-R-803

DESIGN OF A COMPENSATOR FOR AN A.R.M.A. MODEL OF A DISCRETE TIME SYSTEM

BY

Carlos I. Mainemer

This report is based on the unaltered thesis of Carlos I. Mainemer, submitted in partial fulfillment of the requirements for the degree of Master of Science at the Massachusetts Institute of Technology in January, 1978. This research was conducted at the Decision and Control Sciences Group of the M.I.T. Electronic Systems Laboratory with partial support provided by the Contract NASA/Ames #NGL-22-009-124.

Electronic Systems Laboratory
Department of Electrical Engineering and Computer Science
Massachusetts Institute of Technology
Cambridge, Massachusetts 02139

DESIGN OF A COMPENSATOR FOR AN A.R.M.A. MODEL OF A DISCRETE TIME SYSTEM

by

Carlos I. Mainemer

B.S.E.E., Georgia
Institute of Technology

SUBMITTED IN PARTIAL FULFILLMENT OF THE

REQUIREMENTS FOR THE DEGREE OF

MASTER OF SCIENCE

at the

MASSACHUSETTS INSTITUTE OF TECHNOLOGY

January, 1978

Signature of Author .....
Department of Electrical Engineering and Computer Science, January 20, 1978

Certified by .....
Thesis Supervisor

Accepted by .....
Chairman, Departmental Committee on Graduate Students

DESIGN OF A COMPENSATOR FOR AN A.R.M.A.

MODEL OF A DISCRETE TIME SYSTEM

by

Carlos I. Mainemer

Submitted to the Department of Electrical Engineering and Computer Science on January 20, 1978, in partial fulfillment of the requirements for the degree of Master of Science in Electrical Engineering.

ABSTRACT

This thesis considers two problems: a) the design of an optimal dynamic compensator for a multivariable discrete time system and b) the design of compensators to achieve minimum variance control strategies for single input single output systems. Both problems are stochastic in nature.

In the first problem the initial conditions of the plant are random variables with known first and second order moments, and the cost is the expected value of the standard cost, quadratic in the states and controls. The compensator is based on the minimum order Luenberger observer and it is found optimally by minimizing a performance index. Necessary and sufficient conditions for optimality of the compensator are derived. The compensator is given in Auto Regressive Moving Average form.

The second problem is solved in three different ways; two of them working directly in the frequency domain and one working in the time domain (state space techniques). It turns out that the first and second

order moments of the initial conditions are irrelevant to the solution. Necessary and sufficient conditions are derived for the compensator to minimize the variance of the output.

Thesis supervisor: Timothy L. Johnson

Title: Associate Professor of Electrical Engineering

ACKNOWLEDGEMENTS

It is almost impossible to thank all the people that have contributed, in one way or another, to make this moment come true. However, I would like to express my thanks to Professor Timothy L. Johnson, who, not only had the immense task of being my advisor but supervised this thesis from beginning to end.

To Nancy Young for her terrific job and velocity typing this thesis.

To Cheryl Worden for her previous typings and her patience correcting the errors in English.

To the Trachtenberg family, Ernesto Pataky and Carlos A. Pullin for their encouragement and advice in all aspects of life.

To the Organization of American States for their financial aid, without which, this moment would not have occurred.

And to my parents, Abraham and Fina Mainemer for their help, reprimandals and guidance that showed me the way to become what I have become.

TABLE OF CONTENTS

	Page
ABSTRACT	2
ACKNOWLEDGEMENTS	4
TABLE OF CONTENTS	5
CHAPTER I	7
1. Brief Historical Review	7
2. Outline of Contents	8
3. Notation and Terminology	10
CHAPTER II	11
1. Introduction	11
2. Structure of Multivariable Systems	12
3. Minimal State Space Representation for Linear Multivariable Systems	16
4. Classical Adjoint of a Matrix	25
CHAPTER III	29
1. Introduction	29
2. The Discrete Time Linear Regulator Problem	31
3. Structure of the Discrete Time Minimum Order Based Compensator	33
4. The Minimum Order Observer Based Compensator Problem	41

Page

5. The A.R.M.A. Compensator 56

Chapter IV 68

1. Introduction 68

2. Minimum Variance Control - Direct Method 1 69

3. Minimum Variance Control - Matrix Approach 74

4. Minimum Variance Control of an Output Noise-Free System - Direct Method 2 (Astrom's Approach) 85

Chapter V 89

1. Solution Using Direct Method 2 89

2. Checking the Result Using the Matrix Approach 89

REFERENCES 94

CHAPTER I

1. BRIEF HISTORICAL REVIEW

The problem of finding compensators for systems in state space form has been widely studied. It is a known fact that if the pole configuration of a controllable plant is not desirable, it can be arbitrarily changed using state feedback. A rigorous formulation of the linear state regulator problem is also known.

At first, the linear quadratic problem was formulated as a completely deterministic one, penalizing both deviations from the desired plant state and excessive use of control. The solution, as it is well known, is in the form of a complete state feedback control law. This formulation constitutes an idealization, since most of the time the initial state is not exactly known and complete state measurements are not available. For these reasons, the problem was reformulated as a stochastic one where the first and second order statistics of the initial state and the noise were known. The cost was taken as the ensemble average value of the deterministic performance index. Surprisingly enough, the new result was a Kalman filter followed by the same gains obtained in the deterministic framework. In this thesis we will work out this problem assuming that no plant or measurement noise is disturbing the system. The solution obtained is a minimum order observer as proposed by Luenberger (L1) preceded by the gains found in the previous two formulations. Since the parameters of the Luenberger observer are

rather arbitrary, several authors, among them Blanvillain (B1), Miller (M1) and Llorens (L2), have determined the compensator parameters by minimizing a performance index, which gives a specific form for the observer. A surprising characteristic in the solution of this problem is that a separation develops in the equations for the parameters of the observer and the optimal gains, the latter being the same as if complete state measurements were available. It turns out that the minimum-order observer-based compensator is optimal.

All the preceding methods have been worked out for state space representation of a system. Astrom (A1), following another line of work, finds minimal output variance control strategies directly using an Auto-Regressive Moving-Average model for single-input single-output plants. In this approach, although he doesn't have the freedom of the state space techniques (he is just minimizing the variance of the output and no penalties are assigned to the states nor to the input). Astrom has the great advantage that the gains are very easy to compute by simple polynomial division.

2. OUTLINE OF CONTENTS

Chapter two is designed to be a background chapter; this means that the techniques needed to go from an Auto-Regressive Moving-Average (A.R.M.A.) model to a minimal state space representation of a system, and vice versa, are developed. The importance of the fact that the first

transformation is to a minimal state space form lies in the conditions required for positive definiteness of certain covariance matrices, as pointed out by Llorens (L2). This technique requires the A.R.M.A. model to have a specific structure which can be achieved by matrix multiplications. The transformation form state space to an A.R.M.A. model involves the computation of the classical adjoint of a matrix, which is shown in section 4.

In chapter three the structure of the discrete time minimum order observer as well as the linear regulator problem are presented as background for the main problem, the solution of the discrete time minimum order observer based compensator. It is assumed that the initial state plant is a random vector with known first and second order statistics. The performance index is the expectation of the standard cost over the time interval $[0,\infty)$, quadratic in the state and control vectors. The approach mimics Blanvillain's work until the actual minimization point, where the technique used by Llorens (L2) is employed.

Chapter four deal with the problem of finding the minimal variance control strategy for a single-input single-output discrete time system. Direct method 1 gives the necessary conditions to solve the problem, but even for a simple example they are very difficult to solve. The matrix approach solves this problem completely using state space techniques, while direct method 2 gives the solution to the problem in a very simple way (a polynomial division) but has the disadvantage that it assumes the observations to be noise-free. For all the above methods, a certain

structure for the compensator was assumed, and this is that the input at time t cannot depend on the output at the same time t, which makes a lot of sense in a discrete time system because it is not usually possible to feed the output instantaneously back to the input in such a system.

In chapter five a second order example is solved, first using direct method 2, and then the answer is checked by inserting it into the equations given by the matrix approach.

3. NOTATION AND TERMINOLOGY

Small boldface Roman letters will denote vectors and capital letters will denote matrices unless otherwise stated. A' denotes the transpose of A, adjA the classical adjoint of A; I the identity matrix and 0 the zero matrix. A(mxm) denotes the matrix A which is of dimension mxm. It is stressed that same matrices in different chapters have different meanings. P(z) denotes a matrix which is a function of z except in chapter four where it is used as a (scalar) polynomial function of z.

The expected value (ensemble average) is denoted by $E\{\cdot\}$. The covariance matrix of a vector valued random variable:

$$E(x(t)x'(t)) - E(x(t))E(x'(t))$$

is denoted by:

$$\mathrm{cov}(x(t))$$

Also, the numeration of the equations are independent from section to section.

CHAPTER II

1. INTRODUCTION

The problem of finding optimal compensators for systems described in state space form has been widely studied, but this approach assumes that we already have the matrices that describe the system in such a form. This assumption is somewhat ideal, since in order to describe a plant in a mathematical model we have to derive the equations that govern it from basic principles. In this event the model of the system will be given to us in the form of differential equations, for continuous time systems, or difference equations for discrete time systems. In order to design a compensator for such a system, we have to choose one of two possible approaches: either convert the system into a state space representation or use the input output description. In chapter four we are going to use both techniques to find the minimal variance control for a plant, while in chapter three we use only the latter one.

The intention of this chapter is to serve as a background for the work in chapter three. So, we will show the techniques available to convert a system from an A.R.M.A. model to a state space representation, and vice versa.

The structure of this chapter is as follows. In the second section the structure of multivariable systems is presented as a background to the work in section three, where the steps to find a minimal state space

representation for a multivariable system are developed. Both these sections rely on the work of Wolovich (W1) and Wolovich and Falb (W2). Section four deals with the transformation back from the state space form to an A.R.M.A. model, where the main problem is the calculation of the adjoint of a matrix. This section is based on Gantmacher's book [G1].

2. STRUCTURE OF MULTIVARIABLE SYSTEMS

Let's consider systems of the form

$$x(t+1) = A\,x(t) + B\,u(t) \qquad (1)$$
$$y(t) = C\,x(t)$$

where

$x(t)$ is an n vector

$u(t)$ is p vector

$y(t)$ an m vector

and A,B,C are constant matrices of appropriate dimensions.

Furthermore, let's assume that B and C are matrices of full rank. Then, it is a well known fact that if the pair (A,C) is completely observable, there exists a similarity transformation Q such that the system

$$z(t+1) = \hat{A}\,z(t) + \hat{B}\,u(t) \qquad (2)$$
$$y(t) = \hat{C}\,z(t)$$

where $\hat{A} = -Q^{-1}AQ \quad \hat{B} = Q^{-1}B \quad \hat{C} = CQ$

is in standard observable form.

We are going to show now, how to obtain the matrix Q.

Let $K = [C', -A'C', A'^2C', \ldots (-A')^{n-1}C']$, then, since we assumed that system (1) was completely observable, the $n \times nm$ matrix k is of rank n, and it is possible to define a basis for R_n consisting of the first n linearly independent columns of K. Let L be a matrix whose columns are the basis for R_n in the following order

$$L = [C_1', -A'C_1', \ldots, (-A')^{\sigma_1 - 1} C_1', C_2', \ldots, (-A')^{\sigma_2 - 1} C_2', \ldots, (-A')^{\sigma_{m-1}} C_m']$$

where

$$C = \begin{bmatrix} -C_1- \\ -C_2- \\ \vdots \\ -C_m- \end{bmatrix}$$

Setting $d_k = \sum_{i=1}^{k} \sigma_i \qquad k = 1,2,\ldots,m$

where $d_0 = 0$

and letting J_k be the d_k^{th} row of L^{-1}, we define the matrix Q as

$$Q = [J_1' \ (-A)J_1' \ \ldots \ (-A)^{\sigma_1 - 1} J_1', \ldots, \ (-A)^{\sigma_{m-1}} J_m']$$

After doing the transformation pointed out in (2) we get $\hat{A}$ as a block matrix of the form

$$\hat{A} = \begin{bmatrix} \hat{A}_{11} & \cdots & \hat{A}_{1m} \\ \hat{A}_{21} & \cdots & \hat{A}_{2m} \\ \vdots & & \vdots \\ \hat{A}_{m1} & \cdots & \hat{A}_{mm} \end{bmatrix}$$

with $\hat{A}_{ii}$ a $\sigma_i \times \sigma_i$ companion matrix given by

$$\hat{A}_{ii} = \begin{bmatrix} 0 & 0 & .. & 0 & \hat{A}d_{i-1} + 1, d_i \\ 1 & 0 & .. & 0 & \hat{A}d_{i-1} + 2, d_i \\ 0 & 1 & .. & 0 & \hat{A}d_{i-1} + 3, d_i \\ & & & & \\ 0 & 0 & .. & 1 & \hat{A}d_{i-1}, d_i \\ 0 & 0 & .. & 0 & \hat{A}d_i, d_i \end{bmatrix}$$

and $\hat{A}_{ij}$ a $_i \times _j$ matrix

$$\hat{A}_{ij} = \begin{bmatrix} 0 & 0 & .. & \hat{A}d_{i-1} + 1, d_j \\ 0 & 0 & .. & \hat{A}d_{i-1} + 2, d_j \\ & & & \\ 0 & 0 & .. & \hat{A}d_i d_j \end{bmatrix}$$

for $i \neq j$. And C is an $m \times n$ matrix of the form

$$C = \begin{bmatrix} 0 & .... & 1 & 0... & 0 & ... & 0 \\ 0 & .... & \hat{C}_2, d_1 & 0... & 1 & ... & 0 \\ 0 & .... & \hat{C}_3, d_1 & 0... & \hat{C}_3, d_2 & ... & 0 \\ 0 & .... & \hat{C}_m, d_1 & 0... & \hat{C}_m, d_2 & ... & 1 \end{bmatrix}$$

Now, that we have obtained the structure of the system after the transformations were made, we are going to compute the transfer matrix of the plant, $T(z)$

$$T(z) = \hat{C}(zI-\hat{A})^{-1}\hat{B}$$

But by taking advantage of the struccure of the system, we can find $T(z)$ as

$$T_F(z) = \hat{C}_0 \, \Delta^{-1}(z) S(z) \hat{B}_0$$

where

$$S(z) = \begin{bmatrix} 1 & z & \cdots & z^{\sigma_1 - 1} & 0 & \cdots & 0 & \cdots & 0 \\ 0 & 0 & \cdots & 0 & 1 & \cdots & z^{\sigma_2 - 1} & \cdots & 0 \\ 0 & 0 & \cdots & 0 & 0 & \cdots & 0 & \cdots & z^{\sigma_m - 1} \end{bmatrix}$$

$$\hat{C}_0 = \begin{bmatrix} 1 & 0 & \cdots & 0 \\ \hat{C}_{2,d_1} & 1 & \cdots & 0 \\ \hat{C}_{3,d_1} & \hat{C}_{3,d_2} & \cdots & 0 \\ \hat{C}_{m,d_1} & \hat{C}_{m,d_2} & \cdots & 1 \end{bmatrix}$$

$$\hat{B}_0 = \hat{B}$$

and $\Delta(z)$ is the m x m matrix with entries given by $\Delta_{ii}(z) = \det(zI_{\sigma_i} - \hat{A}_{ii})$ and $\Delta_{ij}(z) = -\hat{A}d_{i-1}+1,dj - z\hat{A}d_{i-1} \div 2,dj - \ldots - z^{\sigma_{i-1}} \hat{A}d_{i},d_j$ for $i \neq j$.

Note that $\Delta(z)$ can be rewritten as

$$\Delta(z) = \begin{bmatrix} z^{\sigma_1} & 0 & 0 & \cdots & 0 \\ 0 & z^{\sigma_2} & 0 & \cdots & 0 \\ 0 & 0 & z^{\sigma_3} & \cdots & 0 \\ 0 & 0 & 0 & \cdots & z^{m} \end{bmatrix} - S(z)\hat{A}_0$$

where $\hat{A}_0$ is an n x m matrix of the coefficients of A_{ij} $i,j = 1,2,\ldots m$ given by

$$\hat{A}_0 = \begin{bmatrix} \hat{A}_{1,d_1} & \hat{A}_{1,d_2} & & \hat{A}_{1,d_m} \\ \hat{A}_{2,d_1} & \hat{A}_{2,d_2} & & \hat{A}_{2,d_m} \\ \vdots & \vdots & & \vdots \\ \hat{A}_{d_1,d_1} & \hat{A}_{d_1,d_2} & \cdots & \hat{A}_{d_1,d_m} \\ \hat{A}_{d_1+1,d_1} & \hat{A}_{d_1+1,d_2} & & \hat{A}_{d_1+1,d_m} \\ \vdots & \vdots & & \vdots \\ \hat{A}_{d_2,d_1} & \hat{A}_{d_2,d_2} & & \hat{A}_{d_2,d_m} \\ \vdots & \vdots & & \vdots \\ \hat{A}_{d_{m-1}-1,d_1} & \hat{A}_{d_{m-1}+1,d_2} & & \hat{A}_{d_{m-1}+1,d_m} \\ \vdots & \vdots & & \vdots \\ \hat{A}_{d_m,d_1} & \hat{A}_{d_m,d_2} & & \hat{A}_{d_m,d_m} \end{bmatrix}$$

3. MINIMAL STATE SPACE REPRESENTATION FOR LINEAR MULTIVARIABLE SYSTEMS

In this section, we present an algorithm, based on Wolovich's paper (W1), that gives a minimal state space representation for a system expressed in a more general matrix difference operator form. This transformation is very important in practice, since as the result of applying well known physical laws, such as Kirchoff's laws for electrical networks

or Lagrange equations for mechanical systems, we obtain mathematical models for plants in the form of differential or difference equations and not in state space form. The advantage of having a state space representation, lies in the fact that there exist, at the present, very powerful techniques for designing and analyzing plants that are described in such a form. These are not available when working directly with the equations that govern the system.

After the algorithm is developed, a simple example will be presented to show how it works.

We will work with systems that are not as general as the ones considered by Wolovich (W1), namely, systems that are described by the matrix difference equations

$$P(z)w(t) = Q(z)w(t) \tag{1}$$

$$y(t) = Rw(t) \tag{2}$$

where $P(z)$ is a $m \times m$ matrix

$Q(z)$ is $m \times p$ matrix

R an $m \times m$ constant nonsingular matrix

and z a difference or delay operator.

Furthermore, we assume that $P(z)$ is nonsingular, in order for the above equations to represent the transfer matrix of a system, that the system is strictly proper and that it is irreducible, that is, that the composite matrix $[P(z), Q(z)]$ has rank m for every $z \in C$, as defined by Rosenbrock (R1) and Popov (P1). This irreducibility assumption will guarantee that

the system in state space form will be minimal. The definition of row proper form will also ve required.

DEFINITION (Row proper):

Let

$$P(z) = \begin{bmatrix} P_{11}z^{d_1}+\ldots & P_{12}z^{d_1}+\ldots & \ldots & P_{1m}z^{d_1}+\ldots \\ P_{21}z^{d_2}+\ldots & P_{22}z^{d_2}+\ldots & \ldots & P_{2m}z^{d_2}+\ldots \\ \vdots & & & \\ P_{m1}z^{d_m}+\ldots & P_{m2}z^{d_m}+\ldots & \ldots & P_{mm}z^{d_m}+\ldots \end{bmatrix}$$

where the $+\ldots$ denotes lower degree terms in each row of $P(z)$, and d_i is the degree of the highest-order term of the ith row. Then $P(z)$ is said to be row proper if and only if $\det(\Gamma)$ is not equal to zero where

$$\Gamma = \begin{bmatrix} P_{11} & P_{12} & \cdots & P_{1m} \\ P_{21} & P_{22} & \cdots & P_{2m} \\ \vdots & \vdots & & \\ P_{m1} & P_{m2} & \cdots & P_{mm} \end{bmatrix}$$

ALGORITHM

Step 1:

If $P(z)$ is row proper, this step can be omitted. If $P(z)$ is not row proper, we premultiply (1) by any unimodular matrix $U(z)$ which reduces $P(z)$ to row proper form. An algorithm for finding such a $U(z)$ is given by Wolovich (W1) in the appendix of his paper. So (1) and (2)

reduce to

$$U(z)P(z)w(t) = U(z)Q(z)u(t) \tag{3}$$

$$y(t) = R\,w(t) \tag{4}$$

which is equivalent to the system described by (1) and (2).

Step 2:

Let

$$w_0(t) = \Gamma\, w(t)$$

where Γ is the m x m nonsingular constant real matrix consisting of the highest degree z terms in each row of $U(z)P(z)$. If $\Gamma = I$ this step can be omitted, if not, we substitute $\Gamma^{-1}\, w_0(t)$ for $w(t)$ in (3) and (4) to obtain

$$P_0(z)\; w_0(t) = Q_0(z)\; u(t) \tag{5}$$

$$y(t) = R_0\; w_0(t) \tag{6}$$

where $P_0(z) = U(z)P(z)\Gamma^{-1}$

$Q_0(z) = U(z)Q(z)$

$R_0 = R\Gamma^{-1}$

We can show now, that the matrix $P_0(z)$ is in a particularly useful form; i.e.,

$$P_0(z) = \begin{bmatrix} z^{d_1}+\dots & \dots & \dots & \dots \\ \dots & z^{d_2}+\dots & \dots & \dots \\ \vdots & \vdots & \vdots & \vdots \\ \dots & \dots & \dots & z^{d_m}+\dots \end{bmatrix}$$

where the ... denotes polynomials of lower degree than d_k in each (k^{th}) row.

Since we assumed that the system was strictly proper, we can omit Wolovich's third step. Note that the intention of the previous two steps is to be able to identify the matrices $P_0(z)$ and $Q_0(z)$ with the $\Delta(z)$ and $S(z)\hat{B}_0$ found in section two. Once we have determined $P_0(z)$ and $Q_0(z)$, we can obtain a minimal realization $(\bar{A}_0, \bar{B}_0, \bar{C}_0)$ directly by observing their structure.

Step 3:

Let us rewrite $P_0(z)$ as

$$P_0(z) = \begin{bmatrix} z^{\sigma_1} & & 0 & & 0 \\ & z^{\sigma_2} & & & \vdots \\ 0 & & & & 0 \\ \vdots & & z^{\sigma_3} & & \\ & & & & \\ 0 & & & z^{\sigma_m} & \end{bmatrix} - S(z)A_0$$

where we have replaced d_i by σ_i, so that the similarity between the structures of $\Delta(z)$ and $P_0(z)$ be more striking.

Let $S(z)$ be the $m \times m$ matrix defined in section two and A_0 an $m \times m$ constant real matrix.

Since the system is strictly proper, we can write $Q_0(z)$ as

$$Q_0(z) = S(z)B_0 \tag{7}$$

where $\hat{B}_0$ is an n x p constant real matrix.

We observe that the only term left unspecified in order for

$$T(z) = P_0^{-1}(z)Q_0$$

to be equal to

$$T(z) = \hat{C}_0 \Delta^{-1}(z)S(z)\hat{B}_0$$

is $\hat{C}_0$. But since $P_0^{-1}(z)Q_0$ is already equal to $\Delta(z)S(z)\hat{B}_0$ we let $\hat{C}_0 = I_m$.

So, we can now obtain directly a minimal realization for the system

$$P_0(z)\ w_0(t) = Q_0(z)\ u(t) \tag{5}$$

as follows.

Define

$$r_k = \sum_{i=1}^{k} \sigma_i \text{ for } k = 1,2,\ldots,m \tag{8}$$

Replace the $m-r_k^{th}$ columns of the (n x n) matrix

$$\begin{bmatrix} 0 & \cdots & 0 \\ & & \vdots \\ & I_{m-1} & \vdots \\ & & 0 \end{bmatrix}$$

by the m ordered columns of A_0 to obtain $\bar{A}_0$. $\hat{B}_0$ as given by (7) is an appropriate $\bar{B}_0$ corresponding to the choice of $\bar{A}_0$. Finally, let $\bar{C}_0$ be the matrix obtained by substituting the $m-r_k^{th}$ columns of the m x n zero matrix by the m ordered columns of $\hat{C}_0$ i.e., I_m.

Thus far, we have obtained the following state space representation

$$x_0(t+1) = \bar{A}_0\, x_0(t) + \bar{B}_0\, u(t)$$

$$w_0(t) = \bar{C}_0\, x_0(t)$$

Step 4:

Since we want to observe the output $y(t)$ and not $w_0(t)$, we can use equation (6) to obtain:

$$x_0(t+1) = \bar{A}_0\, x_0(t) + \bar{B}_0\, u(t)$$

$$y(t) = R_0\bar{C}_0\, x_0(t)$$

So, finally we have the desired minimal realization

$$x(t+1) = A\, x(t) + B\, u(t)$$

$$y(t) = C\, x(t)$$

where

$$A = \bar{A}_0$$

$$B = \bar{B}_0$$

$$C = R_0\bar{C}_0 = R\, \Gamma_R^{-1}\, \bar{C}_0$$

<u>EXAMPLE</u>

Let

$$P(z) = \begin{bmatrix} z^2 + 5z + 6 & 3z + 4 \\ z^2 - 2 & z + 1 \end{bmatrix}$$

$$Q(z) = \begin{bmatrix} z - 1 & z - 4 \\ z & z - 2 \end{bmatrix}$$

and

$$R = \begin{bmatrix} 1 & 0 \\ 0 & 1 \end{bmatrix}$$

Step 1

$$\Gamma = \begin{bmatrix} 1 & 0 \\ 1 & 0 \end{bmatrix}$$ so, the system is not row proper.

Let

$$U(z) = \begin{bmatrix} 1 & 0 \\ 1 & -1 \end{bmatrix}$$

then

$$U(z)P(z) = \begin{bmatrix} z^2 + 5z + 6 & 3z + 4 \\ 5z + 8 & 2z + 3 \end{bmatrix}$$

$$U(z)Q(z) = \begin{bmatrix} z - 1 & z - 4 \\ - 1 & - 2 \end{bmatrix}$$

Step 2

$$\Gamma = \begin{bmatrix} 1 & 0 \\ 5 & 2 \end{bmatrix} \iff \Gamma^{-1} = \begin{bmatrix} 1 & 0 \\ -5/2 & 1/2 \end{bmatrix}$$

so

$$P_0(z) = \begin{bmatrix} z^2 - 5/2z - 4 & 3/2\ z + 2 \\ 1/2 & z + 3/2 \end{bmatrix}$$

$$Q_0(z) = \begin{bmatrix} z - 1 & z - 4 \\ -1 & -2 \end{bmatrix}$$

$$R_0 = \begin{bmatrix} 1 & 0 \\ -5/2 & 1/2 \end{bmatrix}$$

Step 3

$$P_0(z) = \begin{bmatrix} z^2 & 0 \\ 0 & z \end{bmatrix} - \begin{bmatrix} 1 & z & 0 \\ 0 & 0 & 1 \end{bmatrix} \begin{bmatrix} 4 & -2 \\ 5/2 & -3/2 \\ -1/2 & -3/2 \end{bmatrix}$$

and

$$Q_0(z) = \begin{bmatrix} 1 & z & 0 \\ 0 & 0 & 1 \end{bmatrix} \begin{bmatrix} -1 & -4 \\ 1 & 1 \\ -1 & -2 \end{bmatrix}$$

$r_1 = 2$ and $r_2 = 3$, then

$$\bar{A}_0 = \begin{bmatrix} 0 & 4 & -2 \\ 1 & 5/2 & -3/2 \\ 0 & -1/2 & -3/2 \end{bmatrix} \qquad \bar{B}_0 = \begin{bmatrix} -1 & -4 \\ 1 & 1 \\ -1 & -2 \end{bmatrix}$$

and

$$\bar{C}_0 = \begin{bmatrix} 0 & 1 & 0 \\ 0 & 0 & 1 \end{bmatrix}$$

Step 4

$$C = R_0 \bar{C}_0 = \begin{bmatrix} 0 & 1 & 0 \\ 0 & -5/2 & 1/2 \end{bmatrix}$$

So finally

$$x(t+1) = \begin{bmatrix} 0 & 4 & -2 \\ 1 & 5/2 & -3/2 \\ 0 & -1/2 & -3/2 \end{bmatrix} x(t) + \begin{bmatrix} -1 & -4 \\ 1 & 1 \\ -1 & -2 \end{bmatrix} u(t)$$

$$y(t) = \begin{bmatrix} 0 & 1 & 0 \\ 0 & -5/2 & 1/2 \end{bmatrix} x(t)$$

4. CLASSICAL ADJOINT OF A MATRIX

This last section of this chapter deals with the problem of finding the (classical) adjoint of a matrix. As will be seen in the next chapter, this is the last step needed to convert the system given in a state space

form into a matrix difference operator form. The method to be used is the one suggested by Faddeev (F1) for the simultaneous determination of the scalar coefficients of the characteristic polynomial of a matrix A, and the matrix coefficients of the classical adjoint matrix M(z).

Let A be an n x n constant matrix, so, it is well known that

$$(zI-A)^{-1} = \frac{\text{adj } (zI-A)}{\det (zI-A)} = \frac{M(z)}{p(z)}$$

where

$$M(z) = \text{adj } (zI-A)$$

and $p(z) = \det (zI-A) = z^m - p_1 z^{m-1} - p_2 z^{m-2} - \ldots - p_m$

As shown in Gantmacher's book (G1), the difference $p(z) - p(u)$ is divisible by z- . without remainder. Therefore

$$g(z,u) = \frac{p(z)-p(u)}{z-u} = z^{m-1} + (u-p_1)z^{m-2} + (u^2-p_1u-p_2)z^{m-3} + \ldots \tag{1}$$

is a polynomial in z and u.

The identity

$$p(z) - p(u) = g(z,u)(z-u)$$

will still hold if we replace z and u by the matrices zI and A respectively, giving

$$p(zI) - p(A) = g(zI,A)(zI-A) \tag{2}$$

but, since by the Cayley-Hamilton theorem $p(A) = 0$, we get

$$p(zI) = g(zI,A)(zI-A) \tag{3}$$

therefore

$$(zI-A)^{-1} = (p(zI))^{-1}\, g(zI,A) = \frac{g(zI,A)}{p(z)} \tag{4}$$

so

$$g(zI,A) = M(z) \tag{5}$$

Hence, by virtue of (1) and (5)

$$M(z) = Iz^{m-1} + M_1 z^{m-2} + M_2 z^{m-3} + \ldots + M_{m-1} \tag{6}$$

where

$$M_1 = A - p_1 I \qquad M_2 = A^2 - p_1 A - p_2 I \quad \ldots$$

and in general

$$M_k = A^k - p_1 A^{k-1} - p_2 A^{k-2} - \ldots - p_k I \qquad k = 1,2,\ldots,m-1 .$$

So, it can be easily seen that the matrices $M_1, M_2, \ldots, M_{m-1}$ can be computed using the recursive equation

$$M_k = AM_{k-1} - p_k I \qquad k = 1,2,\ldots,m-1 \tag{7}$$

where

$$M_0 = I$$

The coefficients of the characteristic polynomial $p(z)$ can be easily found successively as

$$k\, p_k = S_k - p_1 S_{k-1} - \ldots - p_{k-1} S_1 \qquad k = 1,2,\ldots,n \tag{8}$$

where

$$S_k = tr(A^k)$$

Faddeev (F1) combining (7) and (8) obtained the coefficients $p_1, p_2, \ldots, p_n$ and the matrices $M_1, M_2, \ldots, M_{n-1}$ successively as follows:

$$
\begin{array}{lll}
A_1 = A & p_1 = \mathrm{tr}(A_1) & M_1 = A_1 - p_1 I \\
A_2 = AM_1 & p_2 = \frac{1}{2}\,\mathrm{tr}(A_2) & M_2 = A_2 - p_2 I \\
A_3 = AM_2 & p_3 = \frac{1}{3}\,\mathrm{tr}(A_3) & M_3 = A_3 - p_3 I \\
\vdots & \vdots & \vdots \\
A_{n-1} = AM_{n-2} & p_{n-1} = \frac{1}{n-1}\,\mathrm{tr}(A_{n-1}) & M_{n-1} = A_{n-1} - p_{n-1} I \\
A_n = AM_{n-1} & p_n = \frac{1}{n}\,\mathrm{tr}(A_n) &
\end{array}
\tag{9}
$$

In order to check the computations, we can go one step further and find whether $M_n = A_n - p_n I$ equals zero or not. If $M_n = 0$ the computations are right, and if $M_n \neq 0$ there is a mistake somewhere.

The formulas in (9) are the ones that will be used in the next chapter to find the adjoint of the matrix $(zI-F)$.

CHAPTER III

1. INTRODUCTION

This chapter will deal with the problem of finding a minimum order based compensator for a discrete time system.

The problem of designing optimal compensators can be tackled in two completely different ways: (1) it can be worked out directly in the frequency domain or (2) the system can be transformed from the frequency domain equations into state space form, and then the compensator structure can be found easily using the powerful techniques available. Graphically, this means:

$$\begin{array}{ccc} P(z),\ Q(z) & \overset{1}{\div} & R(z),\ S(z) \\ 2(a)\ \downarrow & & \uparrow\ \ 2(c) \\ (A,B,C) & \underset{2(b)}{\div} & (F,G,D,P) \end{array}$$

There are advantages and disadvantages for working with either method; many of them arise from practical considerations--for example, solving the problem directly in the frequency domain has the great advantage that most specifications are given in terms of rise time, overshoot, bandwidth, etc., which can be handled easier using techniques such as Nyquist plots, Inverse Nyquist plots, Root Locus, and Bode plots. Another advantage of the frequency domain method is a very practical one; engineers, in the great majority, identify very easily with such terminology.

The big disadvantage that this method faces, is the lack of powerful, easy to implement, techniques, especially in the case of multiple-input, multiple-output problems. In the last years, several computer-aided techniques have been developed to try to overcome this deficiency, among them the diagonal dominance method presented by Rosenbrock (R1) is widely used for multivariable systems. But still, there isn't yet, a frequency domain technique that could be compared in scope and versatility, to the linear quadratic design in state space form.

For this reason, the approach of this chapter will follow path 2 shown in the above graph.

The importance of step 2(c) lies in the fact that for systems that do not require the use of a computer, the compensator can be built very easily using only delays and gains that are readily available. When computers are used to implement the control, this structure is also very convenient since a stack can be created and very few memory locations will be required.

This chapter, as mentioned above, will consider the problem of designing an optimal compensator whose dynamics are constrained to be those of a discrete time minimum order observer. The initial, as well as the final form will be a matrix difference operator. The initial condition of the plant will be a random vector with known first and second order statistics, and the cost to be minimized will be the expectation, with respect to the initial condition, of the standard quadratic cost for

the discrete time linear regualtor problem.

The structure of this chapter is as follows. In section two the discrete time linear regulator problem is presented. Section three deals with the structure of the discrete minimum order observer as suggested by Luenberger (L1). In the fourth section of this chapter the optimal control problem is formulated and the equations that must be satisfied by the unknown parameters of the compensator are developed. Also the necessary conditions for optimality are presented but not worked out (based on Lloren's thesis (L2). In the last section, the transformation from state space form into an Auto-Regressive Moving-Average model along with the structure of the matrix F of the compensator and some pertinent remarks are presented.

2. THE DISCRETE TIME LINEAR REGULATOR PROBLEM

This section considers the problem of finding an optimal compensator, given the fact that complete state measurements are available. The initial condition of the plant is assumed to be a random vector with known first and second order statistics. The performance index to be minimized is the expectation of the usual cost, quadratic in both states and control. Since this problem is well known, only the problem formulation and the results are presented.

OPTIMIZATION PROBLEM

Given:

(a): The following minimal realization discrete time linear invariant plant

$$x(t+1) = A\,x(t) + B\,u(t) \tag{1}$$

on the time interval t $[0,\infty)$ where

$x(0)$ is an R^n random vector with known first and second order statistics

$x(t)$ an R^n - valued random process

$u(t)$ an R^p - valued random process to be determined

A a constant real n x n matrix and

B a constant real n x p matrix

(b): The symmetric matrices Q and R where

Q is an n x n constant real symmetric positive semidefinite matrix and

R a p x p constant real symmetric positive definite matrix

Find: the optimal control u(t) which minimizes the performance index J(u) given by

$$J(u) = E \sum_{t=0}^{\infty} x'(t)Q\,x(t) + u'(t)R\,u(t) \tag{2}$$

As it was pointed out before, the solution of this problem is a well known result given by

$$u(t) = G\,x(t)$$

where

$$G = (R + B'KB)^{-1} B'KA \tag{3}$$

and K is a symmetric matrix that satisfies the discrete time algebraic Riccati equation

$$K = A'KA + Q - A'KB(R + B'KB)^{-1} B'KA \tag{4}$$

The minimal cost to go is then obtained as

$$J^* = tr(K \Sigma_0) \tag{5}$$

where

$$\Sigma_0 = E(x(0)\ x'(0)).$$

It can be shown that K satisfies also the following equation

$$K = (A + BG)'K(A + BG) + Q + G'RG \tag{6}$$

The sufficient conditions that must be satisfied for K to be the unique positive definite solution of (4) are

(a) (A,B) is a completely controllable pair and

(b) $(A,Q^{1/2})$ is a completely observable pair

2. STRUCTURE OF THE DISCRETE TIME MINIMUM ORDER OBSERVER BASED COMPENSATOR

In the previous section, it was assumed that complete state measurements were available, but in most applications only a certain number of states (usually very few of them) or some linear combination of them can be directly observed. This lack of measurements poses a very serious problem in the implementation of the optimal linear regulator, since the control law, instead of being just a linear combination of the states

becomes dependent on time as well as the observed states. Thus, either a new approach that directly accounts for the nonavailability of the entire state vector must be devised, or a suitable approximation to the non available states must be determined. The latter was the direction taken by Luenberger (L1) when he proposed the construction of an observer that would approximate assymptotically the non available states. It turn out as it will be shown in the next section, that the insertion of the observer doesn't change at all the value of the feedback gain matrix G. The only thing that changes is that instead of feeding back the entire state vector, the observed states plus the estimates of the unavailable states are the ones that are fed back. So the first phase in the implementation of an optimal control law should be to assume that the entire state vector is available for feedback, while the second step should be to design a system that will approximate assymptotically the states of the original plant, i.e., to design an observer. When the notion of an observer was first introduced, it was used primarily for the approximation of the states of deterministic, continuous time, linear time invariant plants, but, the observer theory has subsequently been extended to include time varying systems, discrete time systems and stochastic systems. Of course, the construction of a minimum order observer is not the only solution to the problem of finding an optimal compensator. Levine (L3) proposed the use of an optimal output feedback controller, however, not all systems are output stabilizable which could cause an unstable system

to remain unstable. Some other strategies that could be used are

a) to build a full state observer: this approach has all the mathematical simplicity of the minimum order observer's, but implicitly, it possesses a certain degree of redundancy. Redundancy that arises from the fact that the observer will be estimating the entire state, while we already have certain states through the outputs of the system, and

b) to implement an observer that will reconstruct asymptotically the optimal control law $u(t) = G\,x(t)$ as proposed by Fortmann and Williamson (F2): this technique has the advantage that the degree of the observer can be less than that of the minimum order observer, i.e., less than (n-m) but also possess the great disadvantage of mathematical complexity, and it has not been worked out yet for multiple input multiple output systems.

For these reasons, we have selected to find the optimal compensator based on the structure of a minimum order observer.

Let a minimal discrete time, linear time invariant system be governed by the following equations

$$x(t+1) = A\,x(t) + B\,u(t) \tag{1}$$

$$y(t) = C\,x(t) \tag{2}$$

where

$y(t)$ is an R^m random process described by (1) and (2)

C is an $m \times n$ constant, full rank matrix

Furthermore, let us assume that C has the following structure;

$$C = [I_m \vdots 0] \tag{3}$$

where

I_m is the m x m identity matrix and

0 is a mx(n-m) zero matrix.

This is in no way a restriction on the range of systems that we can deal with, since from the assumptions that the system is minimal and that C is a full rank matrix, a similarity transformation can be found that will give us the desired structure. In fact, Blanvillain (B1) shows a way to get this transformation.

Having the system in this specific form, we can partition (1) and (2) in such a way to get

$$x(t+1) = \begin{bmatrix} x_1(t+1) \\ x_2(t+1) \end{bmatrix} = \begin{bmatrix} A_{11} & A_{12} \\ A_{21} & A_{22} \end{bmatrix} \begin{bmatrix} x_1(t) \\ x_2(t) \end{bmatrix} + \begin{bmatrix} B_1 \\ B_2 \end{bmatrix} u(t) \tag{4}$$

$$y(t) = [I_m \vdots 0] \begin{bmatrix} x_1(t) \\ x_2(t) \end{bmatrix} = x_1(t) \tag{5}$$

where

$x_1(t)$ is an R^m random process

$x_2(t)$ is an R^{n-m} random process

and

$A_{11}(m \times m)$, A_{12} $(m \times n-m)$, $A_{21}(n-m \times m)$, $A_{22}(n-m \times n-m)$, $B_1(m \times p)$, $B_2(n-m \times p)$ are real valued matrices

It can be readily seen that the output $y(t)$ will give us directly $x_1(t)$, so an observer should be built to estimate only $x_2(t)$.

Expanding (4) we obtain

$$x_2(t+1) = A_{21}\, x_1(t) + A_{22}\, x_2(t) + B_2\, u(t) \tag{6}$$

$$x_1(t+1) = A_{11}\, x_1(t) + A_{12}\, x_2(t) + B_1\, u(t) \tag{7}$$

Substituting (5) in (7) an rearranging some terms we get

$$y(t+1) - A_{11}\, y(t) - B_1\, u(t) = A_{12}\, x_2(t) \tag{8a}$$

Now, let

$$y(t+1) - A_{11} y(t) - B_1\, u(t) = w(t) \tag{8b}$$

Therefore, systems (6) and (7) can be expressed as

$$x_2(t+1) = A_{22}\, x_2(t) + A_{21}\, y(t) + B_2\, u(t) \tag{9}$$

$$w(t) = A_{12}\, x_2(t) \tag{10}$$

If we can measure $w(t)$, equation (10) provides the measurement $A_{12}\, x_2(t)$ for the system (9) which has state vector $x_2(t)$ and input $A_{21}\, y(t) + B_2\, u(t)$. Provided that $w(t)$ can be computed, the only problem lies in the fact that (A_{22}, A_{12}) has to be completely observable. This problem is readily solved since by assumption (A,C) is completely observable (see Padulo and Arbib (P2)).

The idea behind the construction of the observer is then as follows.

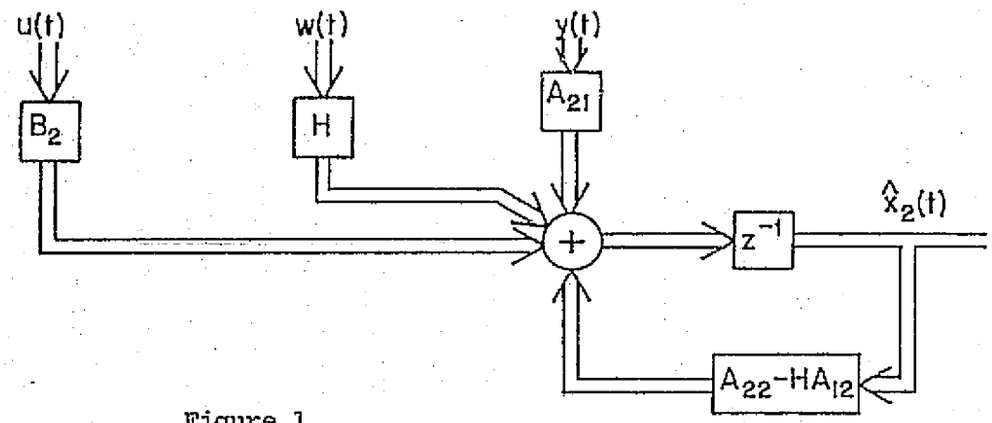

Figure 1

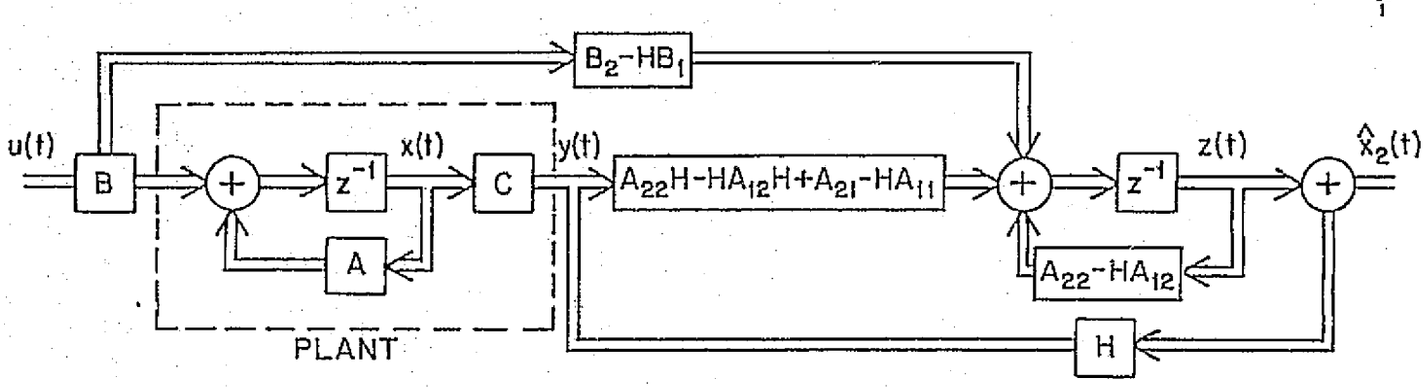

Figure 2

Since $u(t)$ and $y(t)$ are measurable, let us build a system with the exact form of (9) and (10). Then we have

$$\hat{x}_2(t+1) = A_{22}\,\hat{x}_2(t) + A_{21}\,y(t) + B_2\,u(t) \tag{11}$$

$$\hat{w}(t) = A_{12}\,\hat{x}_2(t) \tag{12}$$

But, since any errors in the initial state or disturbances of the system would make our approximation to $x_2(t)$ very bad, let us keep track of the error between $w(t)$ and $\hat{w}(t)$ and feed it back to the system through the matrix H, as shown in Figure 1.

So, we get the structure of the observer as follows

$$\hat{x}_2(t+1) = A_{22}\,\hat{x}_2(t) + A_{21}\,y(t) + B_2\,u(t) + H(w(t)-A_{12}\,\hat{x}_2(t)) \tag{13}$$

Therefore

$$\hat{x}_2(t+1) = (A_{22} - HA_{12})\hat{x}_2(t) + A_{21}\,y(t) + B_2\,u(t) + H\,w(t) \tag{14}$$

Substituting (8b) in (14) we obtain

$$\hat{x}_2(t+1) = (A_{22} - HA_{12})\hat{x}_2(t) + (A_{21} - HA_{11})y(t) + (B_2 - HB_1)u(t) + H\,y(t+1) \tag{15}$$

Now, in order to eliminate the $y(t+1)$ term from equation (15), let us define

$$z(t) = \hat{x}_2(t) - H\,y(t) \tag{16}$$

Finally, inserting (16) into (15) we obtain the desired structure for the observer as shown in Figure 2.

$$z(t+1) = (A_{22} - HA_{12})z(t) + (A_{22} - HA_{12})H\,y(t) + (A_{21} - HA_{11})y(t) + (B_2 - HB_1)\,u(t) \tag{17}$$

$$\hat{x}_2(t) = z(t) + H\,y(t) \tag{18}$$

We are now ready to compute the optimal input to the system given by

$$u(t) = G\begin{bmatrix} x_1(t) \\ \hat{x}_2(t) \end{bmatrix} \tag{19}$$

Partitioning G correspondingly, we obtain

$$u(t) = G_1\,x_1(t) + G_2\,\hat{x}_2(t) \tag{20}$$

where

G_1 is a p x m constant matrix and

G_2 is a p x n-m constant matrix

Substitutiong (18) into (20), we get

$$u(t) = (G_1 + G_2H)y(t) + G_2\,z(t) \tag{21}$$

Note from equation (17), that the observer dynamics are determined by the eigenvalues of $A_{22} - HA_{12}$. Since the pair (A_{22}, A_{12}) is completely observable, it can be shown using duality, that the poles of the system can be arbitrarily chosen by manipulation of the matrix H. This suggests that the closer the eigenvalues of the system are to the origin the better the observer, since it would yield an extremely rapid convergence. This tends, however, to make the observer act like a forward shift which

introduces several difficulties. So, it is common practice to let the dynamics of the observer be just a little faster than those of the plant.

This uncertainty of not knowing how to choose the dynamics of the observer, led during the last decade to some research in this area, in order to obtain the parameters of the H matrix by minimizing a cost. Blanvillain (B1), working the continuous time problem, assumed the optimal control to have the same structure as the optimal control for the linear regulator problem, and then minimized the increment in cost due to the use of the observer. Miller (M1) minimized the standard quadratic cost, constraining the control law to be an affine function of $\hat{x}(t)$. Also Newman (N1), Rom and Sarachick (R1), Yuksel and Bongiorno (Y1) among others contributed in the solution of this problem. The approach to be developed in the next section will follow Blanvillain's method.

4. THE MINIMUM ORDER OBSERVER BASED COMPENSATOR PROBLEM

In this section the actual control problem is solved. As was pointed out earlier, we start with a matrix difference operator equation and based on the results obtained in chapter two, transform the system to a state space representation. As was shown in the previous section, all the parameters of the compensator can be obtained, once we find the matrices H and G. These matrices are found by minimizing the expected value with respect to the initial conditions of the standard quadratic cost. The solution of the optimization problem reduces to finding the solution of two independent discrete time algebraic Ricatti equations.

This separation is achieved by working with $x(t)$, the states of the plant, and $e(t)$, the error in the estimation of $x_2(t)$, instead of working with the more natural variables $x(t)$ and $z(t)$, which lead to less tractable equations. The sufficiency conditions are presented at the end of this section.

Assume that an irreducible system is given to us in the following form:

$$P(z)\ y(t) = Q(z)\ u(t) \tag{1}$$

where

$P(z)$ is an $m \times m$ matrix difference operator

$Q(z)$ is an $m \times p$ matrix difference operator

and we have incorporated the matrix R as defined in chapter two into $P(z)$.

It was shown in section three of chapter two, that the plant (1) can be transformed into a minimal state space representation of the form:

$$x_0(t+1) = A_0 x_0(t) + B_0\ u(t) \tag{2a}$$

$$y(t) = C_0\ x_0(t) \tag{2b}$$

where

$A_0(n \times n)$ is in observable form

$B_0(n \times p)$ is a constant real matrix

$C_0(m \times n)$ is a matrix given by

$$C_0 = \Gamma^{-1}\ \overline{C}_0$$

with

Γ (m x m) and $\overline{C}_0$(m x n) as defined in chapter two.

As pointed out in the previous section, we want the C matrix to be of the form

$$C = [I_m \vdots 0]$$

In the next section, when we discuss the structure of F, a transformation that achieves this goal is fully presented. For now, let us assume that we have the desired structure and proceed with the statement of the optimization problem.

Given:

a) $E\{x(0)\} = m_0$ and $E\{x(0)x'(0)\} = \Sigma_0$ for the process

$$x(t+1) = Ax(t) + Bu(t), \quad t\varepsilon[0,\infty) \tag{3}$$

$$y(t) = [I_m \vdots 0]\, x(t) \tag{4}$$

b) The matrices A and B for the above process

c) The weighting matrices Q(n x n), R(p x p) such that

Q is a constant real symmetric positive semidefinite matrix

R is a constant real symmetric positive definite matrix

Find: the matrices G(p x n) and H(n-m x m) and the vector z(0) such that the cost

$$J = E\{\sum_{t=0}^{\infty} x'(t)Q\,x(t) + u'(t)R\,u(t)\}$$

is minimized subject to

$$x(t+1) = Ax(t) + B\,u(t)$$

$$z(t+1) = Fz(t) + S\,y(t) + D\,u(t)$$

$$y(t) = C\,x(t)$$

$$u(t) = K_1\,y(t) + K_2\,z(t)$$

where

$$F = A_{22} - HA_{12}$$

$$S = FH + (A_{21} - HA_{11})$$

$$D = B_2 - HB_1$$

$$K_1 = G_1 + G_2H$$

$$K_2 = G_2$$

As noted before, this formulation leads to a series of intractable matrix equations that can, however, be avoided by using $e(t)$ = the error in the estimation of $x_2(t)$, instead of $z(t)$. So, let us define $e(t)$ as

$$e(t) = x_2(t) - \hat{x}_2(t) \tag{5}$$

Therefore

$$e(t+1) = F\,e(t) \tag{6}$$

And

$$z(t) = x_2(t) - H\,y(t) - e(t) \tag{7}$$

We can now state the problem as follows: leave everything in the previous formulation unchanged but modify the constraints to read

$$x(t+1) = Ax(t) + Bu(t) \tag{8}$$

$$e(t+1) = (A_{22} - HA_{12})e(t) \tag{9}$$

$$u(t) = Gx(t) - GL\,e(t) \tag{10}$$

$$e(0) = x_2(0) - H\,y(0) - z(0) \tag{11}$$

$$y(t) = x_1(t) \tag{12}$$

where

$$L = \begin{bmatrix} 0_{m\times(n-m)} \\ I_{(n-m)\times(n-m)} \end{bmatrix}$$

Define now the new augmented state

$$\xi(t) = \begin{bmatrix} x(t) \\ e(t) \end{bmatrix}$$

Then we can make use of (8), (9), and (10) to write the overall closed loop system in the following form

$$\xi(t+1) = \Gamma\xi(t) \tag{13}$$

where Γ is given by

$$\Gamma = \begin{bmatrix} A + BG & -BGL \\ 0 & A_{22} - HA_{12} \end{bmatrix} \tag{14}$$

and of (11) to obtain the overall initial conditions as

$$\xi(0) = \begin{bmatrix} x(0) \\ e(0) \end{bmatrix}$$

$$\xi(0) = \begin{bmatrix} x(0) \\ x_2(0) - Hy(0) - z(0) \end{bmatrix} \tag{15}$$

We are now ready to solve the above optimization problem. The cost J can now be rewritten as

$$J = E\{\sum_{t=0}^{\infty} \xi'(t)\ \Omega\ \xi(t)\} \tag{16}$$

where Ω is given by

$$\Omega = \begin{bmatrix} Q + G'RG & -G'RGL \\ -L\ G'RG & L'G'RGL \end{bmatrix} \tag{17}$$

Using equation (13) we can see that $\xi(t)$, the augmented state at time t, can be found as a function of the initial augmented state $\xi(0)$ as follows

$$\xi(t) = \Gamma^t \xi(0) \tag{18}$$

Substituting (18) into (16), the cost J can be expressed as a function of $\xi(0)$

$$J = E\{\sum_{t=0}^{\infty} \xi'(0)\ \Gamma'^t\ \Omega\Gamma^t \xi(0)\} \tag{19}$$

which can be computed as

$$J = tr\{(\sum_{t=0}^{\infty} \Gamma'^t\ \Omega\ \Gamma^t)\ \ \Xi(0)\} \tag{20}$$

where

$$\Xi(0) = E\{\xi(0)\xi'(0)\} \tag{21}$$

In order to find the value of J, we then need to compute only

$$\sum_{t=0}^{\infty} \Gamma'^{t}\, \Omega\, \Gamma^{t} = \Lambda \tag{22}$$

which can be found as a solution of the discrete time Lyapunov equation

$$\Lambda = \Gamma' \Lambda \Gamma + \Omega \tag{23}$$

Therefore

$$J = \mathrm{tr}\{\Lambda \quad \Xi(0)\} \tag{24}$$

EVALUATION OF $\Xi(0)$

Recall from (21) that

$$\Xi(0) = E\{\xi(0)\xi'(0)\}$$

and from (11) that

$$e(0) = x_2(0) - Hx_1(0) - z(0)$$

so

$$\Xi(0) = E \begin{bmatrix} x(0 \\ e(0) \end{bmatrix} [x'(0) \quad e'(0)]$$

$$\Xi(0) = \begin{bmatrix} \Sigma_0 & \Xi_{12} \\ \Xi_{12} & E_0 \end{bmatrix} \tag{25}$$

In order to compute Ξ_{12} and E_0, we need to partition the matrix Σ_0 and the vector m_0 as follows

$$\Sigma_0 = \begin{bmatrix} \Sigma_{11} & \Sigma_{12} \\ \Sigma_{12} & \Sigma_{22} \end{bmatrix}$$

$$m_0 = \begin{bmatrix} m_1 \\ m_2 \end{bmatrix}$$

according to the dimensions of $x_1(0)$ and $x_2(0)$. So

$$\Xi_{12} = E\{x(0)e'(0)\} = \begin{bmatrix} \Sigma_{12} - \Sigma_{11}H' - m_1 z'(0) \\ \Sigma_{22} - \Sigma_{12}'H' - m_2 z'(0) \end{bmatrix} \tag{26}$$

and

$$E_0 = E\{e(0)e'(0)\} = H\Sigma_{11}H' + \Sigma_{22} - \Sigma_{12}'H' - H\Sigma_{12} - z(0)(m_2 - Hm_1)'$$

$$- (m_2 - Hm_1)z'(0) + z(0)z'(0) \tag{27}$$

EVALUATION OF Λ

Recall from (23) that Λ is given by

$$\Lambda = \Gamma' \Lambda \Gamma + \Omega$$

where Γ is given by(14) and Ω by (17).

Partitioning Λ as

$$\Lambda = \begin{bmatrix} \Lambda_{11} & \Lambda_{12} \\ \Lambda_{12} & \Lambda_{22} \end{bmatrix}$$

where

Λ_{11} is an n x n symmetric matrix

Λ_{12} is an n x(n-m) matrix

Λ_{22} is an (n-m)x(n-m) symmetric matrix we

we obtain

$$\begin{bmatrix} \Lambda_{11} & \Lambda_{12} \\ \Lambda_{12} & \Lambda_{22} \end{bmatrix} = \begin{bmatrix} (A + BG)' & 0 \\ -(BGL)' & (A_{22}-HA_{12})' \end{bmatrix} \begin{bmatrix} \Lambda_{11} & \Lambda_{12} \\ \Lambda'_{12} & \Lambda_{22} \end{bmatrix} \begin{bmatrix} A+BG & -BGL \\ 0 & A_{22}-HA_{12} \end{bmatrix} +$$

$$\begin{bmatrix} Q + G'RG & - G'RGL \\ -L'G'RG & L'G'RGL \end{bmatrix} \tag{28}$$

Expanding (28) we obtain the following three matrix equations

$$\Lambda_{11} = (A+BG)' \Lambda_{11} (A+BG) + Q + G'RG \tag{29}$$

$$\Lambda_{12} = -(A+BG)'\Lambda_{11}BGL + (A+BG)'\Lambda_{12}(A_{22}-HA_{12}) - G'RGL \tag{30}$$

$$\Lambda_{22} = (BGL)'\Lambda_{11} BGL - (A_{22}-HA_{12})'\Lambda_{12} BGL - (BGL)'\Lambda_{12}(A_{22}-HA_{12}) +$$

$$+ (A_{22}-HA_{12})'\Lambda_{22}(A_{22}-HA_{12}) + L'G'RGL \tag{31}$$

Comparing equation (29) with equation (6) in section one we get

$$\Lambda_{11} = A'\Lambda_{11}A + Q - A'\Lambda_{11}B(R+B'\Lambda_{11}B)^{-1}B'\Lambda_{11}A \tag{32}$$

and

$$G = -(R + B'\Lambda_{11}B)^{-1}B'\Lambda_{11}A \tag{33}$$

From (30) we obtain

$$\Lambda_{12} = -A'\Lambda_{11}BGL - G'B'\Lambda_{11}BGL - G'RGL + (A+BG)'\Lambda_{12}(A_{22}-HA_{12}) \tag{34}$$

$$\Lambda_{12} = -A'\Lambda_{11}BGL - G'(R+B'\Lambda_{11}B)GL + (A+BG)'\Lambda_{12}(A_{22}-HA_{12}) \tag{35}$$

and substituting (33) into (35)

$$\Lambda_{12} = (A+BG)'\Lambda_{12}(A_{22}-HA_{12}) \tag{36}$$

If the analysis of this problem is done for the finite time interval [0,T] and then the limit is taken, we will find that

$$\Lambda_{12} = 0 \tag{37}$$

Substituting (37) and (33) in (31) we get

$$\Lambda_{22} = (A_{22}-HA_{12})'\Lambda_{22}(A_{22}-HA_{12})-L'G'B'\Lambda_{11}AL \tag{38}$$

Recall now, from (24) that

$$J = tr(\Lambda \quad \Xi(0))$$

then

$$J = \mathrm{tr}\left\{\begin{bmatrix} \Lambda_{11} & 0 & \Sigma_0 & \Xi_{12} \\ 0 & \Lambda_{22} & \Xi_{12} & E_0 \end{bmatrix}\right\} \tag{39}$$

so

$$J = \mathrm{tr}(\Lambda_{11}\Sigma_0) + \mathrm{tr}(\Lambda_{22}E_0) \tag{40}$$

Comparing equation (5) of section one with (40), we see that the inclusion of an observer in the system to estimate the nonavailable states has the effect of increasing the cost by

$$\Delta J = \mathrm{tr}(\Lambda_{22}\, E_0) \tag{41}$$

The idea now is to find the optimum parameter H and z(0) such that the increment in the cost, ΔJ, is minimized, so we want to solve the following minimization problem.

Given:

a) $\Lambda_{22} = (A_{22}-HA_{12})'\Lambda_{22}(A_{22}-HA_{12}) - L'G'B'\Lambda_{11}AL$

where G and Λ_{11} are described by equations (32) and (33), and obviously independent of H and z(0).

b) $E_0 = H\Sigma_{11}H' + \Sigma_{22} - \Sigma_{12}'H - H\Sigma_{12} - z(0)(m_2-Hm_1)' -$

$$-(m_2-Hm_1)z'(0) + z(0)z'(0)$$

Find the optimum parameters of H and z(0) such that the increment in the cost

$$\Delta J = tr(\Lambda_{22}E_0)$$

is minimized.

Llorens proved (L2) that the above dynamic optimization problem can be transformed to a static optimization problem, using a technique similar to the Lagrange multiplier method used to solve minimization problems in calculus. This static optimization problem becomes of the form

$$\Delta J = tr\{\Lambda_{22}E_0 + [(A_{22}-HA_{12})'\Lambda_{22}(A_{22}-HA_{12}) - L'G'B'\Lambda_{11}AL - \Lambda_{22}]K \tag{42}$$

$$\begin{aligned}\Delta J = tr\{ & \Lambda_{22} H\Sigma_{11}H' + \Lambda_{22}\Sigma_{22} - \Lambda_{22}\Sigma_{12}'H' - \Lambda_{22}H\Sigma_{12} \\ & - \Lambda_{22}z(0)(m_2-Hm_1)' - \Lambda_{22}(m_2-Hm_1)z'(0) + \Lambda_{22}z(0)z'(0) \\ & + [(A_{22}-HA_{12})'\Lambda_{22}(A_{22}-HA_{12}) - L'G'B'\Lambda_{11}AL - \Lambda_{22}]K\end{aligned} \tag{43}$$

The necessary condition for (43) to have a stationary point at $z^*(0)$, K^*, H^*, Λ_{22}^* are the following:

$$\frac{\partial J}{\partial z(0)}\Big|_* = 0 \tag{44}$$

$$\frac{\partial J}{\partial K}\Big|_* = 0 \tag{45}$$

$$\frac{\partial J}{\partial H}\Big|_* = 0 \tag{46}$$

$$\frac{\partial \Delta J}{\partial \Lambda_{22}} \Big|_{*} = 0 \tag{47}$$

where $|_*$ means "evaluated at the stationary point"

From (44)

$$\Lambda^*_{22}\, z^*(0) - \Lambda^*_{22}(m_2 - H^* m_1) = 0$$

So

$$z^*(0) = m_2 - H^* m_1 \tag{48}$$

From (45)

$$\Lambda^*_{22} = (A_{22} - H^* A_{12})' \Lambda^*_{22} (A_{22} - H^* A_{12}) - L'G'B'\Lambda_{22} AL \tag{49}$$

From (46)

$$0 = \Lambda^*_{22} H^* \Sigma_{11} - \Lambda^*_{22} \Sigma'_{12} + \Lambda^*_{22} z^*(0) m'_1 - \Lambda^*_{22} A_{22} K^* A'_{12}$$

$$+ \Lambda^*_{22} H^* A_{12} K^* A'_{12} \tag{50}$$

From (47)

$$K = H^* \Sigma_{11} H^{*\prime} + \Sigma_{22} - \Sigma'_{12} H^{*\prime} - H^*\ {}_{12} - z^*(0)(m_2 - H^* m_1)'$$

$$- (m_2 - H^* m_1) z'^*(0) + z^*(0) z^{*\prime}(0) + (A_{22} - H^* A_{12}) K^* (A_{22} - H^* A_{12})' \tag{51}$$

Substituting (48) in (50) and solving for H^* we get

$$H^* = (\Sigma'_{12} - m_2 m'_1 + A_{22} K^* A'_{12})(\Sigma_{11} - m_1 m'_1 + A_{12} K^* A'_{12})^{-1} \tag{52}$$

and substituting (48) in (51)

$$K^* = (A_{22}-H^*A_{12})K^*(A_{22}-H^*A_{12})' + H^*(\Sigma_{11} - m_1m_1')H^{*\prime}$$

$$+ \Sigma_{22} - m_2m_2' - (\Sigma_{12}' - m_2m_1')H^{*\prime} - H^*(\Sigma_{12} - m_1m_2') \qquad (53)$$

which becomes, after some manipulations

$$K^* = A_{22}K^*A_{22}' + \Sigma_{22} - m_2m_2' - (\Sigma_{12}' - m_2m_1' + A_{22}K^*A_{12}')\cdot$$

$$\cdot(\Sigma_{11} - m_1m_1' + A_{12}K^*A_{12}')^{-1}(\Sigma_{12} - m_1m_2' + A_{12}K^*A_{22}') \qquad (54)$$

Summarizing, the optimal compensator parameters H,G, and z(0) can be found as follows

Feedback gain

$$G = -(R + B'\Lambda_{11}B)^{-1}B'\Lambda_{11}A$$

where

$$\Lambda_{11} = A'\Lambda_{11}A + Q - A'\Lambda_{11}B(R+B'\Lambda_{11}B)^{-1}B'\Lambda_{11}A$$

Parameters of the observer

$$H = (\Sigma_{12}' - m_2m_1' + A_{22}KA_{12}')(\Sigma_{11} - m_1m_1' + A_{12}KA_{12}')^{-1}$$

where

$$K = A_{22}KA_{22}' + \Sigma_{22} - m_2m_2' - (\Sigma_{12}' - m_2m_1' + A_{22}KA_{12}')\cdot$$

$$(\Sigma_{11} - m_1m_1' + A_{12}KA_{12}')^{-1}(\Sigma_{12} - m_1m_2' + A_{12}KA_{22}')$$

and

$$z(0) = m_2 - Hm_1$$

Notice from the above equations, that the separation that was referred at the beginning of this section holds. The feedback gain depends only on the plant parameters and the weighting matrices, while the parameters of the observer depend on the plant structure and the statistics of the process. This observation is very important since it allows us to construct the observer and the feedback gain of the compensator independently of one another.

Apart from the assumptions that were made through the development of the optimal compensator, if we assume that $(\Sigma_{11} - m_1 m_1')$ is positive definite, the transfer function of the observer will be unique. Furthermore, Blanvillain and Johnson (B2) found that the plant transfer function uniquely determines the transfer function of the compensator.

Llorens (L2) presented the conditions that must be satisfied in order to guarantee the existence of positive definite Λ_{11} and K matrices. These are

a) (A,B) be a controllable pair

b) $(A, Q^{1/2})$ be an observable pair

and

c) $(A_{22}' - A_{12}'(\Sigma_{11} - m_1 m_1')^{-1}(\Sigma_{12} - m_1 m_2'), A_{12}')$ be a controllable pair

d) $(A'_{22} - A'_{12}(\Sigma_{11} - m_1 m'_1)^{-1}(\Sigma_{12} - m_1 m'_2),\ (\Sigma_{22} - m_2 m'_2 - (\Sigma'_{12} - m_2 m'_1)$

$(\Sigma_{11} - m_1 m'_1)^{-1}(\Sigma_{12} - m_1 m'_2))^{1/2})$ be an observable pair

e) $(\Sigma_{11} - m_1 m'_1)$ is a nonsingular matrix

Condition c) is satisfied if the pair (A,C) is observable. These conditions, especially a) and the implication of condition c) that the pair (A,C) be observable, are the main reasons that led us to construct a minimal realization from the original matrix difference operators.

5. THE A.R.M.A. COMPENSATOR

In the previous section we found the structure of the optimal observer based compensator by minimizing a performance index. Since we want a minimum order observer, it turns out that the input to the system depends not only on the estimates of the nonavailable states, but on the output itself. This is an idealized situation for purely synchronous discrete time systems, since it is impossible in practice to feed back the measurement at time t without any delay. Three different ways get around this problem are:

a) build, instead of a minimum order observer a full state observer: this approach would have all the mathematical simplicity, as well as properties, such as the separation between gain and observer parameters equations, found in the development of the optimal minimum order observer based compensator. In practice, this method won't increase the order of the observer by too much since

generally, the number of outputs even for complex systems, is small compared to the number of states

b) try to find another structure for a compensator, hopefully of degree less than n that will feed back an estimate of the states plus a combination of the outputs at time, say, t-1

c) construct a "nearly synchronous" controller that wil be able to compute u(t) at $(t+\Delta)$, $\Delta << 1$ such that the output at time t could have enough time to be fed back. In this case the same compensator found in the previous section would be used.

In this section, we will assume that the optimal compensator already found is realizable, and then we will transform the state space representation of the compensator into a matrix difference operator form, using the technique presented in section four of chapter two. We will also find the structure of the matrices A and F used in the previous section, and show that F is in observable form.

We are interested here to find then the optimal compensator transfer function. Recall from the previous section that the equations satisfied by the optimal compensator are

$$z(t+1) = Fz(t) + S\,y(t) + D\,u(t) \tag{1}$$

$$u(t) = K_1 y(t) + K_2\,z(t) \tag{2}$$

where

$F = A_{22} - HA_{12}$ is an $(n-m)x(n-m)$ matrix

$S = FH + A_{21} - HA_{11}$ is an $(nxm)xm$ matrix

$D = B_2 - HB_1$ is an $(n-m)xp$ matrix

$K_1 = G_1 + G_2H$ is an $p \times m$ matrix

$K_2 = G_2$ is a $p \times (n-m)$ matrix

From (1) and (2)

$$z(t) = (zI-F)^{-1} S\, y(t) + (zI-F)^{-1} D\, u(t) \tag{3}$$

$$u(t) = K_1 y(t) + K_2 z(t) \tag{4}$$

Substituting $z(t)$ from (3) in (4) we obtain

$$u(t) = K_1 y(t) + K_2 (zI-F)^{-1} Sy(t) + K_2 (zI-F)^{-1} D\, u(t) \tag{5}$$

Finally rearranging terms we get

$$(I_p - K_2 (zI-F)^{-1} D) u(t) = (K_1 + K_2 (zI-F)^{-1} S) y(t) \tag{6}$$

which is a transfer equation from output to input.

Note that the system described by (6) is not irreducible, but at any rate, we are not concerned in this section to obtain a system in irreducible matrix difference operator form. It is important to note also, that since it is needed to compute $(zI-F)^{-1}$ on both sides of (6), we can multiply both I_p and K_1 by $\det(zI-F)$ and then cancel the $\frac{1}{\det(zI-F)}$ that will be present on both sides. In other words

$$(\det(zI-F) I_p - K_2 (\mathrm{adj}(zI-F)) D) u(t) = (\det(zI-F) K_1 + K_2 (\mathrm{adj}(zI-F)) S) y(t) \tag{7}$$

and here is where Faddev's method to compute the adjoint of a matrix becomes handy.

COMPUTATION OF det(zI-F) AND adj(zI-F)

Note from section four of chapter two that if the det(zI-F) is given by

$$\det(zI-F) = z^{n-m} - p_1 z^{n-m-1} - p_2 z^{n-m-2} - \dots - p_{n-m} \tag{8}$$

and the adj(zI-F) by

$$\mathrm{adj}(zI-F) = Iz^{n-m-1} + J_1 z^{n-m-2} + J_2 z^{n-m3} + \dots J_{n-m-1} \tag{9}$$

we can compute simultaneously $p_1, p_2, \dots, p_{n-m}$ and $J_1, J_2, \dots, J_{n-m-1}$ using Faddeev's algorithm

$$\begin{array}{lll}
F_1 = F & p_1 = \mathrm{tr}(F_1) & J_1 = F_1 - p_1 I \\
F_2 = FJ_1 & p_2 = \frac{1}{2}\mathrm{tr}(F_2) & J_2 = F_2 - p_2 I \\
F_3 = FJ_2 & p_3 = \frac{1}{3}\mathrm{tr}(F_3) & J_3 = F_3 - p_3 I \\
\vdots & \vdots & \\
F_{n-m-1} = FJ_{n-m-2} & p_{n-m-1} = \frac{1}{n-m-1}\mathrm{tr}(F_{n-m-1}) & J_{n-m-1} = F_{n-m-1} - p_{n-m-1} I \\
F_{n-m} = FJ_{n-m-1} & p_{n-m} = \frac{1}{n-m}\mathrm{tr}(F_{n-m}) &
\end{array} \tag{10}$$

Inserting (8) and (9) into (7) we obtain

$$[(z^{n-m} - p_1 z^{n-m-1} - \dots - p_{n-m})I_p - K_2(Iz^{n-m-1} + J_1 z^{n-m-2}$$

$$+ \dots + J_{n-m-1})D]u(t) = [(z^{n-m} - p_1 z^{n-m-1} - \dots - p_{n-m})K_1$$

$$+ K_2(Iz^{n-m-1} + J_1 z^{n-m-2} + \dots + J_{n-m-1})S]y(t) \tag{11}$$

which reduces to the Auto-Regressive Moving-Average form

$$I_p u(t+n-m)-(p_1 I_p+K_2 D)u(t+n-m-1)- \dots - (p_{n-m} I_p + K_2 J_{n-m-1} D)u(t) =$$

$$= K_1 y(t+n-m)-(p_1 K_1-K_2 S)y(t+n-m-1)- \dots - (p_{n-m} K_1-K_2 J_{n-m-1} S)y(t) \qquad (12)$$

Notice that the number of multiplications required to obtain each new input is

$$(n+p^2)(n-m) + pm \qquad (13)$$

This number can be reduced if instead of using (6) we compute the transfer function of the system as follows: Substitute (2) into (1) to get

$$z(t+1) = (F+DK_2)z(t) + (S+DK_1)y(t) \qquad (14)$$

Taking the Z-transform in both sides we obtain

$$z(t) = [zI-(F+DK_2)]^{-1}(S+DK_1)y(t) \qquad (15)$$

to finally substitute (15) into (2) to get

$$u(t) = (K_2[zI-(F+DK_2)]^{-1}(S+DK_1) + K_1)y(t) \qquad (16)$$

Employing again Faddeev's method to obtain both $\det[zI-(F+DK_2)]$ and $\mathrm{adj}[zI-(F+DK_2)]$ we get

$$I_p u(t+n-m)-r_1 I_p u(t+n-m-1)- \dots - r_{n-m} I_p u(t) = K_1 y(t+n-m)$$

$$- (r_1 K_1-K_2(S+DK_1))y(t+n-m-1)- \dots - (r_{n-m} K_1-K_2 M_{n-m-1}(S+DK_1))y(t) \qquad (17)$$

where

$$\det[zI-(F+DK_2)] = z^{n-m} - r_1 z^{n-m-1} - r_2 z^{n-m-2} - \dots - r_{n-m}$$

and

$$\mathrm{adj}[zI-(F+DK_2)]^2 = Iz^{n-m-1} + M_1 z^{n-m-2} + \ldots + M_{n-m-1}$$

Notice that the number of multiplications required by using (17) has been reduced to

$$(pm+p)(n-m) + pm \tag{18}$$

STRUCTURE OF THE A AND F MATRICES

After using Wolovich's method in the previous section to achieve the transformation from a matrix difference operator form into a state space representation, we pointed out that a similarity transformation was required in order to put the system into state output canonical form. We will present now one transformation that will give us the matrix F in an observable form.

Recall from equations (2a) and (2b) of sections four that we have a completely observable system of the form

$$x_0(t+1) = A_0 x_0(t) + B_0\, u(t) \tag{19}$$

$$y(t) = C_0\, x_0(t) \tag{20}$$

where

$A_0(n\times m)$ is in observable form

$B_0(n\times p)$ is a constant matrix

$C_0(m\times n)$ is a matrix given by

$$C_0 = \Gamma_R^{-1}\, \bar{C}_0$$

that we want to convert into state output canonical form. That is, we want to find a similarity transformation given by

$$x(t) = J\,x_0(t) \tag{21}$$

such that

$$x(t) = JA_0J^{-1}\,x(t) + JB_0\,u(t) = Ax(t) + Bu(t) \tag{22}$$

$$y(t) = C_0J^{-1}\,x(t) \tag{23}$$

is in state output canonical form.

Let us look at the structure of C_0 in order to find the desired J^{-1}

$$C_0 = \begin{array}{c} \left[\begin{array}{cccc|cccc|c|c} 0 & 0 & .. & 0 & & 0 & 0 & .. & 0 & & \\ 0 & 0 & .. & 0 & \Gamma_{c1}^{-1} & 0 & 0 & .. & 0 & \Gamma_{c2}^{-1} \cdots & \Gamma_{cm}^{-1} \\ \vdots & \vdots & & \vdots & & \vdots & \vdots & & & & \\ 0 & 0 & .. & 0 & & 0 & 0 & & 0 & & \end{array}\right] \\ \begin{array}{cccccc} & & r_1 & & r_2 & r_m \end{array} \end{array} \tag{24}$$

where Γ_{c1}^{-1}, Γ_{c2}^{-1}, .. Γ_{cm}^{-1} denote the first, second, ..., and m^{th} columns of Γ^{-1} and $r_1, r_2, \ldots, r_m$ are the $r_1, r_2, \ldots, r_m$ columns of C_0 as defined by (8) in section three of chapter two. We see that if we define J^{-1} as

$$
J^{-1} = \begin{array}{c}
\\ \\ \\ r_1 \\ \\ \\ r_2 \\ \\ \\ \\ \\ r_m \\ \\
\end{array}
\left[\begin{array}{cccc|cccccccccccc}
0 & 0 & \cdots & 0 & 1 & 0 & \cdots & 0 & 0 & 0 & \cdots & 0 & 0 & \cdots & 0 \\
0 & 0 & \cdots & 0 & 0 & 1 & \cdots & 0 & 0 & 0 & \cdots & 0 & 0 & \cdots & 0 \\
 & & & & & & & & & & & & & & \\
0 & 0 & \cdots & 0 & 0 & 0 & & 1 & 0 & 0 & \cdots & 0 & 0 & \cdots & 0 \\
- & & \Gamma_{r1} & - & 0 & 0 & & 0 & 0 & 0 & \cdots & 0 & 0 & \cdots & 0 \\
0 & 0 & & 0 & 0 & 0 & & 0 & 1 & 0 & \cdots & 0 & 0 & \cdots & 0 \\
0 & 0 & \cdots & 0 & 0 & 0 & & 0 & 0 & 1 & \cdots & 0 & 0 & \cdots & 0 \\
 & & & & & & & & & & & & & & \\
0 & 0 & \cdots & 0 & 0 & 0 & & 0 & 0 & 0 & \cdots & 1 & 0 & \cdots & 0 \\
- & & \Gamma_{r2} & - & 0 & 0 & & 0 & 0 & 0 & \cdots & 0 & 0 & \cdots & 0 \\
0 & 0 & \cdots & 0 & 0 & 0 & & 0 & 0 & 0 & \cdots & 0 & 1 & \cdots & 0 \\
 & & & & & & & & & & & & & & \\
 & & & & & & & & & & & & & & \\
0 & 0 & \cdots & 0 & 0 & 0 & & 0 & 0 & 0 & \cdots & 0 & 0 & \cdots & 1 \\
- & & \Gamma_{rm} & - & 0 & 0 & & 0 & 0 & 0 & \cdots & 0 & & \cdots & 0
\end{array}\right]
\qquad (25)
$$

$$
\begin{array}{cc}
m & n-m
\end{array}
$$

where $r_1, r_2, \ldots, r_m$ denote the $r_1, r_2, \ldots, r_m$ rows of J^{-1} and Γ_{r1}, $\Gamma_{r2}, \ldots,$ Γ_{rm} are the first, second,..., and m^{th} rows of Γ.

Then C will be in state output canonical form, i.e.,

$$C = [I_m \quad 0_{m\times(n-m)}] \qquad (26)$$

From (25)

$$
J = \left[\begin{array}{cccc|cccc|cccc|}
0 & 0 & \cdots & 0 & 0 & 0 & \cdots & 0 & 0 & \cdots & 0 & \\
 & & & \Gamma_{c1}^{-1} & & & & \Gamma_{c2}^{-1} & & & & \Gamma_{cm}^{-1} \\
0 & 0 & \cdots & 0 & 0 & 0 & \cdots & 0 & 0 & \cdots & 0 & \\
\hline
1 & 0 & 0 & 0 & 0 & 0 & 0 & 0 & 0 & \cdots & 0 & 0 \\
0 & 1 & 0 & 0 & 0 & 0 & 0 & 0 & 0 & & 0 & 0 \\
0 & 0 & 1 & 0 & 0 & 0 & 0 & 0 & 0 & & 0 & 0 \\
0 & 0 & 0 & 0 & 1 & 0 & 0 & 0 & 0 & & 0 & 0 \\
0 & 0 & 0 & 0 & 0 & 1 & 0 & 0 & 0 & & 0 & 0 \\
0 & 0 & 0 & 0 & 0 & 0 & 1 & 0 & 0 & & 0 & 0 \\
0 & 0 & 0 & 0 & 0 & 0 & 0 & 0 & 1 & & 0 & 0 \\
0 & 0 & 0 & 0 & 0 & 0 & 0 & 0 & 0 & & 1 & 0 \\
0 & 0 & 0 & 0 & 0 & 0 & 0 & 0 & 0 & & 0 & 0 \\
 & & & \uparrow & & & & \uparrow & & & & \uparrow \\
 & & & r_1 & & & & r_2 & & & & r_m
\end{array}\right]
\begin{array}{l} \\ m \\ \\ \\ \\ \\ n-m \\ \\ \\ \\ \\ \end{array}
\tag{27}
$$

So A will be given by

$$A = JAJ^{-1} \tag{28}$$

which becomes

$$
A = \left[\begin{array}{cccc|ccccccccccc}
| & | & | & & 0 & 0 & \cdots & 0 & | & 0 & 0 \cdots & 0 & | & 0 \cdots 0 & | \\
 & & & & & & & & \Gamma_{c1}^{-1} & & & & \Gamma_{c2}^{-1} & & \Gamma_{cm}^{-1} \\
 & & & & 0 & 0 & \cdots & 0 & | & 0 & 0 \cdots & 0 & | & 0 \cdots 0 & | \\
 & & & & \vdots & \vdots & & \vdots & \vdots & \vdots & \vdots & \vdots & \vdots & \vdots & \vdots \\
 & & & & 0 & 0 & & 0 & 0 & 0 & 0 & 0 & 0 & 0 \quad 0 & 0 \\
 & & & & 1 & 0 & & 0 & 0 & 0 & 0 & 0 & 0 & 0 \quad 0 & 0 \\
 & & & & 0 & 1 & & 0 & 0 & 0 & 0 & 0 & 0 & 0 \quad 0 & 0 \\
 & & & \cdot\cdot & 0 & 0 & & 1 & 0 & 0 & 0 & 0 & 0 & 0 \quad 0 & 0 \\
 & & & & 0 & 0 & & 0 & 0 & 0 & 0 & 0 & 0 & 0 \quad 0 & 0 \\
 & & & & 0 & 0 & & 0 & 0 & 1 & 0 & 0 & 0 & 0 \quad 0 & 0 \\
 & & & & 0 & 0 & & 0 & 0 & 0 & 1 & 0 & 0 & 0 \quad 0 & 0 \\
 & & & & 0 & 0 & & 0 & 0 & 0 & 0 & 1 & 0 & 0 \quad 0 & 0 \\
 & & & & 0 & 0 & & 0 & 0 & 0 & 0 & 0 & 0 & 1 \quad 0 & 0 \\
 & & & & 0 & 0 & & 0 & 0 & 0 & 0 & 0 & 0 & 0 \quad 1 & 0 \\
| & | & | & & 0 & 0 & & 0 & 0 & 0 & 0 & 0 & 0 & 0 \quad 0 & 0
\end{array}\right]
\begin{array}{l} m \\ \\ \\ n-m \end{array}
$$

$$\underbrace{\qquad}_{m} \qquad\qquad \underbrace{\qquad\qquad}_{n-m}$$

where the | columns denote columns of numbers.

Recall now that F is obtained by

$$F = A_{22} - HA_{12} \tag{30}$$

So, from (29) and (30) we can finally find the structure of F to be given by

$$F = \left[\begin{array}{cccc|cccc|ccc}
0 & 0 & \cdots & 0 & 0 & 0 & \cdots & 0 & 0 & \cdots & 0 \\
1 & 0 & \cdots & 0 & 0 & 0 & \cdots & 0 & 0 & \cdots & 0 \\
0 & 1 & \cdots & 0 & 0 & 0 & \cdots & 0 & 0 & \cdots & 0 \\
 & & \vdots & & & & \vdots & & & \vdots & \\
0 & 0 & \cdots & 1 & 0 & 0 & \cdots & 0 & 0 & \cdots & 0 \\
0 & 0 & \cdots & 0 & 0 & 0 & \cdots & 0 & 0 & \cdots & 0 \\
0 & 0 & \cdots & 0 & 1 & 0 & \cdots & 0 & 0 & \cdots & 0 \\
0 & 0 & \cdots & 0 & 0 & 1 & \cdots & 0 & 0 & \cdots & 0 \\
 & & \vdots & & & & \vdots & & & \vdots & \\
0 & 0 & \cdots & 0 & 0 & 0 & \cdots & 1 & 0 & \cdots & 0 \\
0 & 0 & \cdots & 0 & 0 & 0 & \cdots & 0 & 0 & & 0 \\
0 & 0 & \cdots & 0 & 0 & 0 & \cdots & 0 & 1 & & 0 \\
 & & \vdots & & & & \vdots & & & \vdots & \\
0 & 0 & \cdots & 0 & 0 & 0 & & 0 & 0 & & 1
\end{array}\right]$$

which is the multivariable observable form.

REMARKS

a) Taking advantage of the structure of F and using (1) and (2), we find that the number of multiplications needed to obtain each new input working in state space form is $(2p+2m)(n-m) + pm$. Comparing this number with $(pm+p)(n-m) + pm$, the number found for the Auto-Regressive Moving-Average model, we note that for systems that have a small number of inputs, the difference is not that big. We need to have in mind also that the A.R.M.A. structure found is not irreducible, so for specific problems, some extra savings in the above number of computations can be achieved.

b) As was pointed out earlier, one of the big advantages of having the system in an A.R.M.A. form is that for simple systems the implementation of the compensator can be done with readily available elements, and for more complex systems a stack can be created, which allows us to avoid

core memory accesses, a characteristic that speeds up the computation time.

CHAPTER IV

INTRODUCTION

In this chapter we will present three different methods to obtain minimum variance control strategies for single input single output discrete time systems. The main reason to build these types of compensators is to reduce the effects that noise has on the plant. As will be seen in the example solved in chapter five, these procedures do not guarantee the stability of the compensator. Even though the compensator will not be necessarily stable, the overall system will be. In order to avoid the problems pointed out in the previous chapter, it is assumed that the compensator computes each new input as a function, solely, of the past information available, i.e., $u(t)$ depends only on the previous inputs $u(t-1)$, $u(t-2)$,... and the previous noisy measurements $z(t-1)$, $z(t-2)$,....

The structure of this chapter is as follows. In section two the necessary conditions to achieve a minimum variance control for a noisy system with noisy measurements are obtained. This is a direct method since it will not be necessary to transform the system into a state space representation. This technique has the great disadvantage that even for very low ordered systems the equations become untractable. Section three deals with the same problem, but the system is converted to state space form. Although the structure assumed for the compensator does not allow us to get a separation to obtain its parameters, as was the case with the minumum-order based compensator solved in the previous chapter,

the matrix equations that we get can be solved with the use of a computer. Section four presents the strategy developed by Astrom to get the minimum output variance control for a discrete time linear time invariant plant with noise-free measurements. It turns out that the compensator, using this method, is very easy to get. A simple polynomial division gives directly the parameters of the compensator as well as the numbers required to find the variance of the output.

2. MINIMUM VARIANCE CONTROL-DIRECT METHOD 1

As was pointed out in the introduction, the great disadvantage of this method lies in the fact that the equations that need to be solved are not difficult to get, but if obtained, difficult to solve. The idea behind this technique is as follows: once the structure of the compensator is assumed, substitute it into the transfer function of the original system, in order to obtain the transfer function of the overall system depending only on the transfer function from internal noise and measurement noise to output. At this point, we go back to the time domain and find the necessary conditions required to get a minimum variance of the output.

Let us assume that an nth discrete time linear time invariant single input system is described by the following Auto Regressive Moving Average equation:

$$y(t+n)+a_{n-1}y(t+n-1)+ \dots + a_0y(t) = b_{n-1}u(t+n-1)+ \dots + b_0u(t)+ c_{n-1}v(t+n-1)+ \dots + c_0v(t) \qquad (1)$$

where

$u(t)$ is the input to the system

$v(t)$ is the internal white gaussian noise such that

$$E(v(t)) = 0 \text{ and } \mathrm{cov}(v(t)) = v\delta(t)$$

Since the measurements are also noisy, let

$$z(t) = y(t) + w(t) \tag{2}$$

where

$w(t)$ is a white gaussian noise such that

$$E(w(t)) = 0,\ \mathrm{cov}(w(t)) = W\delta(t) \text{ and } E(v(t)w(t)) = 0$$

Now, let us assume that the nth order compensator has the following structure

$$u(t+n) + d_{n-1}\, u(t+n-1) + \ldots + d_0\, u(t) = f_{n-1} z(t+n-1) + \ldots + f_0 z(t) \tag{3}$$

which can be rewritten as

$$u(t+n) + d_{n-1}\, u(t+n-1) + \ldots + d_0\, u(t) = f_{n-1} y(t+n-1) + \ldots + f_0 y(t) + f_{n-1}\, w(t+n-1) + \ldots + f_0\, u(t) \tag{4}$$

Taking the Z-transform of both (1) and (4) we get

$$y(t) = \frac{B(z)}{A(z)}\, u(t) + \frac{C(z)}{A(z)}\, v(t) \tag{5}$$

$$u(t) = \frac{F(z)}{D(z)}\, y(t) + \frac{F(z)}{D(z)}\, w(t) \tag{6}$$

where

$$A(z) = z^n + a_{n-1}z^{n-1} + \dots + a_0$$

$$B(z) = b_{n-1}z^{n-1} + \dots + b_0$$

$$C(z) = c_{n-1}z^{n-1} + \dots + c_0$$

$$D(z) = z^n + d_{n-1}z^{n-1} + \dots + d_0$$

$$F(z) = f_{n-1}z^{n-1} + \dots + f_0$$

Substituting (6) into (5) we get

$$y(t) = \frac{B(z)}{A(z)} \left[\frac{F(z)}{D(z)} y(t) + \frac{F(z)}{D(z)} w(t)\right] + \frac{C(z)}{A(z)} v(t) \tag{7}$$

which becomes

$$y(t) = \frac{B(z)F(z)}{A(z)D(z)-B(z)F(z)} w(t) + \frac{C(z)D(z)}{A(z)D(z)-B(z)F(z)} v(t) \tag{8}$$

Equation (8) describes the overall closed loop transfer function. Note that since $B(z)F(z)$ is of degree $2n-2$ and $A(z)D(z)-B(z)F(z)$ of degree $2n$, the measurement noise at time t will be delayed twice before it is reflected on the output of the system; this is logical since this disturbance has to go through the compensator as well as the plant before it goes out. Observe also that since the order of $C(z)D(z)$ is $2n-1$ the internal noise is delayed only once, this is because $v(t)$ has only to go through the plant before it is reflected at the output.

Having obtained the transfer function of the closed loop system we go back to the time domain to express

$$y(t) = \sum_{n=0}^{t} h(t-n)w(n) + \sum_{n=0}^{t} g(t-n)v(n) \tag{9}$$

where

$h(t)$ is the inverse Z-transform of $\frac{B(z)F(z)}{A(z)D(z)-B(z)F(z)}$

$g(t)$ is the inverse Z-transform of $\frac{C(z)D(z)}{A(z)D(z)-B(z)F(z)}$

We are now ready to compute the variance of $y(t)$

$$E(y^2(t)) = E[(\sum_{n=0}^{t} h(t-n)w(n) + \sum_{n=0}^{t} g(t-n)v(n))(\sum_{i=0}^{t} h(t-i)w(i) + \sum_{i=0}^{t} g(t-i)v(i)) \quad (10)$$

Recalling that $v(t)$ and $w(t)$ are independent, (10) becomes

$$E(y^2(t)) = E(\sum_{n=0}^{t} h(t-n)w(n) \sum_{i=0}^{t} h(t-i)w(i) + \sum_{n=0}^{t} g(t-n)v(n) \sum_{i=0}^{t} g(t-i)v(i)) \quad (11)$$

Since $E(w(n)w(i)) = W\delta(n-i)$ and $E(v(n)v(i)) = V\delta(n-i)$, we obtain

$$E(y^2(t) = \sum_{n=0}^{t} h^2(n)W + \sum_{n=0}^{t} g^2(n)V \quad (12)$$

and taking the limit as $t \to \infty$ we finally get

$$E(y^2(\infty)) = \sum_{n=0}^{\infty} h^2(n)W + \sum_{n=0}^{\infty} g^2(n)V \quad (13)$$

therefore, the necessary conditions that must be satisfied to obtain a minimum output variance are

$$\sum_{n=0}^{\infty} h(n) \frac{\partial h(n)}{\partial s} W + \sum_{n=0}^{\infty} g(n) \frac{\partial g(n)}{\partial s} V = 0 \tag{14}$$

for each s, s being $d_{n-1}, d_{n-2}, \ldots, d_0, f_{n-1}, f_{n-2}, \ldots, f_0$

We can see in (14) the difficulty to implement the compensator using this technique, because, not only to obtain g(n) and h(n) for n=0,1,..., is a tremendous task, but to solve the necessary conditions is almost impossible, since in almost every h(i) and g(i) there are present at least several of the parameters we are trying to find.

In order to avoid these difficulties, we can use Parseval's relation to put (13) as follows

$$E(y^2(\infty)) = \frac{W}{2\pi} \int_{-\pi}^{\pi} H(e^{ju}) H^*(e^{ju}) du + \frac{V}{2\pi} \int_{-\infty}^{\infty} G(e^{ju}) G^*(e^{ju}) du \tag{15}$$

and then the necessary conditions become

$$W \int_{-\pi}^{\pi} H(e^{ju}) \frac{\partial H^*(e^{ju})}{\partial s} du + W \int_{-\pi}^{\pi} \frac{\partial H(e^{ju})}{\partial s} H^*(e^{ju}) du +$$

$$+ V \int_{-\pi}^{\pi} G(e^{ju}) \frac{\partial G^*(e^{ju})}{\partial s} du + V \int_{-\pi}^{\pi} \frac{\partial G(e^{ju})}{\partial s} G^*(e^{ju}) du = 0 \tag{16}$$

for each s as defined above.

Note that even though the parameters of the compensator can be found more easily using (16) instead of (14), they are not readily available and the computations are still difficult especially because of the integration that must be done.

3. MINIMUM VARIANCE CONTROL--MATRIX APPROACH

The difficulty of solving this minimum variance control problem using the direct method 1 approach, leads us to obtain the solution by using state space techniques. The idea behind this matrix approach is to convert the system and the assumed compensator structure into state space form and then minimize the limit as $t \to \infty$ of the variance of the output with respect to the unknown parameters.

Recall from the previous section that the plant mathematical representation is

$$y(t+n) + a_{n-1}y(t+n-1) + \ldots + a_0 y(t) = b_{n-1}u(t+n-1) + \ldots + b_0\, u(t)$$

$$+ c_{n-1}(v(t+n-1) + \ldots + c_0 v(t) \tag{1}$$

and the compensator's is

$$u(t+n) + d_{n-1}u(t+n-1) + \ldots + d_0 u(t) = f_{n-1}y(t+n-1) + \ldots + f_0 y(t)$$

$$+ f_{n-1}w(t+n-1) + \ldots + f_0 w(t) \tag{2}$$

We can represent these systems in state space form as

$$x(t+1) = \begin{bmatrix} 0 & 0 & & 0 & -a_0 \\ 1 & 0 & & 0 & -a_1 \\ 0 & 1 & \ldots & 0 & -a_2 \\ \cdot & \cdot & & \cdot & \cdot \\ \cdot & \cdot & & \cdot & \cdot \\ \cdot & \cdot & & \cdot & \cdot \\ 0 & 0 & & 1 & -a_{n-1} \end{bmatrix} x(t) + \begin{bmatrix} b_0 \\ b_1 \\ b_2 \\ \cdot \\ \cdot \\ \cdot \\ b_{n-1} \end{bmatrix} u(t) + \begin{bmatrix} c_0 \\ c_1 \\ c_2 \\ \cdot \\ \cdot \\ \cdot \\ c_{n-1} \end{bmatrix} v(t) \tag{3}$$

$$y(t) = [0 \quad 0 \ \ldots \ 0 \ 1]x(t) \tag{4}$$

$$z(t+1) = \begin{bmatrix} 0 & 0 & & 0 & -d_0 \\ 1 & 0 & \ldots & 0 & -d_1 \\ 0 & 1 & & 0 & -d_2 \\ \vdots & \vdots & & \vdots & \vdots \\ 0 & 0 & & 1 & -d_{n-1} \end{bmatrix} z(t) + \begin{bmatrix} f_0 \\ f_1 \\ f_2 \\ \vdots \\ f_{n-1} \end{bmatrix} y(t) + \begin{bmatrix} f_0 \\ f_1 \\ f_2 \\ \vdots \\ f_{n-1} \end{bmatrix} u(t) \tag{5}$$

$$u(t) = [0 \quad 0 \ \ldots \ 0 \ 1] \ z(t) \tag{6}$$

and for convenience as

$$x(t+1) = Ax(t) + Bu(t) + Cv(t) \tag{7}$$

$$y(t) = Hx(t) \tag{8}$$

$$z(t+1) = D_{OBS} \, z(t) + Fy(t) + Fw(t) \tag{9}$$

$$u(t) = Hz(t) \tag{10}$$

Furthermore, we assume that (A,B) and (A,C) are controllable pairs.

For reasons that will be seen later, we let

$$D_{OBS} = L + DH \tag{11}$$

where

$$L = \begin{bmatrix} 0 & 0 & & 0 & 0 \\ 1 & 0 & & 0 & 0 \\ 0 & 1 & \ldots & 0 & 0 \\ \vdots & \vdots & & \vdots & \vdots \\ 0 & 0 & & 1 & 0 \end{bmatrix}$$

and

$$D = \begin{bmatrix} -d_0 \\ -d_1 \\ -d_2 \\ \vdots \\ -d_{n-1} \end{bmatrix}$$

Then we can rewrite (9) as

$$z(t+1) = (L+DH)z(t) + Fy(t) + Fw(t) \tag{12}$$

and the augmented system is

$$\begin{bmatrix} x(t+1) \\ z(t+1) \end{bmatrix} = \begin{bmatrix} A & BH \\ FH & L+DH \end{bmatrix} \begin{bmatrix} x(t) \\ z(t) \end{bmatrix} + \begin{bmatrix} C & 0 \\ 0 & F \end{bmatrix} \begin{bmatrix} v(t) \\ w(t) \end{bmatrix} \tag{13}$$

$$y(t) = [H \quad 0] \begin{bmatrix} x(t) \\ z(t) \end{bmatrix} \tag{14}$$

Letting

$$\xi(t) = \begin{bmatrix} x(t) \\ z(t) \end{bmatrix} \tag{15}$$

and

$$\Gamma = \begin{bmatrix} A & BH \\ F & L+DH \end{bmatrix} \qquad \alpha = \begin{bmatrix} C & 0 \\ 0 & F \end{bmatrix} \tag{16}$$

we can write (13) and (14) as

$$\xi(t+1) = \Gamma\,\xi(t) + \alpha \begin{bmatrix} v(t) \\ w(t) \end{bmatrix} \tag{17}$$

$$y(t) = [H \quad 0]\ \xi(t) \tag{18}$$

Note from (17) that

$$\xi(t) = \Gamma^{t}\,\xi(0) + \sum_{i=0}^{t-1} \Gamma^{t-i-1}\ \alpha \begin{bmatrix} v(i) \\ w(i) \end{bmatrix} \tag{19}$$

We are now ready to find the variance of the output as follows

$$E(y'(t)y(t)) = E(\xi'(t) \begin{bmatrix} H' \\ 0 \end{bmatrix} [H \quad 0]\ \xi(t)) \tag{20}$$

so

$$\mathrm{var}(y(t)) = E(\xi'(t) \begin{bmatrix} H'H & 0 \\ 0 & 0 \end{bmatrix} \xi(t) \tag{21}$$

since we are interested in finding the limit as $t \to \infty$ of var(y(t)) as a function of the initial conditions of the plant and compensator, and the disturbance variance, we can rewrite (21) as

$$\lim_{t\to\infty} E[\xi'(0)\Gamma'^{t} \begin{bmatrix} H'H & 0 \\ 0 & 0 \end{bmatrix} \Gamma^{t}\,\xi(0) + \sum_{i=0}^{t-1} [v(i)w(i)]\,\alpha'\ \Gamma'^{t-i-1}$$

$$\begin{bmatrix} H'H & 0 \\ 0 & 0 \end{bmatrix} \sum_{j=0}^{t-1} \Gamma^{t-j-1}\ \alpha \begin{bmatrix} v(j) \\ w(j) \end{bmatrix} \tag{22}$$

which, recalling from the previous section that w(t) and v(t) are independent white gaussian noises, becomes,

$$\lim_{t\to\infty} E[\xi'(0)\ \Gamma'^{t} \begin{bmatrix} H'H & 0 \\ 0 & 0 \end{bmatrix} \Gamma^{t}\ \xi(0) + \sum_{i=0}^{t-1} [v(i)w(i)]\alpha'\ \Gamma'^{t-i-1}$$

$$\begin{bmatrix} H'H & 0 \\ 0 & 0 \end{bmatrix} \Gamma^{t-i-1}\ \alpha \begin{bmatrix} v(i) \\ u(i) \end{bmatrix} \tag{23}$$

that can be computed as

$$\mathrm{tr}(\Lambda_1\ \Xi(0)) + \mathrm{tr}(\Lambda_2\ \alpha \begin{bmatrix} v & 0 \\ 0 & w \end{bmatrix} \alpha') \tag{24}$$

where

$$\Xi(0) = E[\xi(0)\xi'(0)]$$

$$\Lambda_1 = \lim_{t\to\infty} \Gamma'^{t} \begin{bmatrix} H'H & 0 \\ 0 & 0 \end{bmatrix} \Gamma^{t}. \tag{25}$$

$$\Lambda_2 = \lim_{t\to\infty} \sum_{i=0}^{t-1} \Gamma'^{t-i-1} \begin{bmatrix} H'H & 0 \\ 0 & 0 \end{bmatrix} \Gamma^{t-i-1} \tag{26}$$

Since we want a stable overall system, note that $\lim_{t\to\infty} \Gamma^{t}$ should be zero so

$$\Lambda_1 = 0 \tag{27}$$

then (24) becomes

$$\mathrm{var}(y(\infty)) = \mathrm{tr}(\Lambda_2 \begin{bmatrix} CVC' & 0 \\ 0 & FWF' \end{bmatrix}) \tag{28}$$

where Λ_2 solves the discrete time Lyapunnov equation

$$\Lambda_2 = \Gamma' \Lambda_2 \Lambda + \begin{bmatrix} H'H & 0 \\ 0 & 0 \end{bmatrix} \tag{29}$$

At this point we can see why the compensator is not guaranteed to be stable while the overall system is. From equation (23) we note that although we are "sort of penalizing" $x(t)$ we are not doing the same with $z(t)$, and from (26) we observe that if the overall system was not stable Λ_2 would diverge. We are now ready to solve for the necessary conditions in order for the compensator to privide a minimum variance control. To do this we have to minimize

$$tr(\Lambda_2 \begin{bmatrix} CVC' & 0 \\ 0 & FWF' \end{bmatrix})$$

with respect to F and D

subject to

$$\Lambda_2 = \Gamma' \Lambda_2 \Gamma + \begin{bmatrix} H'H & 0 \\ 0 & 0 \end{bmatrix}$$

As was pointed out in chapter three, we can convert this dynamic minimization problem into a static minimization as follows.

Define

$$J = tr(\Lambda_2 \begin{bmatrix} CVC" & 0 \\ 0 & FWF' \end{bmatrix} + [-\Lambda_2 + \Gamma'\Lambda_2 \Gamma + \begin{bmatrix} H'H & 0 \\ 0 & 0 \end{bmatrix}] \beta) \tag{30}$$

In order for J to be a minimum the following necessary conditions must be satisfied

$$\frac{\partial J}{\partial \beta}\Big|_{*} = 0 \tag{31}$$

$$\frac{\partial J}{\partial \Lambda_2}\Big|_{*} = 0 \tag{32}$$

$$\frac{\partial J}{\partial F}\Big|_{*} = 0 \tag{33}$$

$$\frac{\partial J}{\partial D}\Big|_{*} = 0 \tag{34}$$

where $|_*$ means "evaluated at the optimum solutions".

From (31) we obtain

$$\Lambda_2 = \Gamma' \Lambda_2 \Gamma + \begin{bmatrix} H'H & 0 \\ 0 & 0 \end{bmatrix} \tag{35}$$

From (32)

$$\beta = \Gamma\beta\Gamma' + \begin{bmatrix} CVC' & 0 \\ 0 & FWF' \end{bmatrix} \tag{36}$$

Partitioning Λ_2 and β as

$$\Lambda_2 = \begin{bmatrix} \Lambda_{11} & \Lambda_{12} \\ \Lambda_{12}' & \Lambda_{22} \end{bmatrix}$$

$$\beta = \begin{bmatrix} \beta_{11} & \beta_{12} \\ \beta_{12}' & \beta_{22} \end{bmatrix}$$

we can see that (30) can be rewritten as

$$J = tr[\Lambda_{11}CVC' + \Lambda_{22}FWF' + [-\Lambda_{11}A + A'\Lambda_{12}FH + H'F'\Lambda_{12}'A +$$

$$+ H'F'\Lambda_{22}FH + H'H]\beta_{11} + [-\Lambda_{12} + A'\Lambda_{11}BH + A'\Lambda_{12}L + A'\Lambda_{12}DH +$$

$$+ H'F'\Lambda_{12}'BH + H'F'\Lambda_{22}L + H'F'\Lambda_{22}DH]\beta_{12}' + [-\Lambda_{12}' + H'B'\Lambda_{11}A +$$

$$+ H'D'\Lambda_{12}'A + H'B'\Lambda_{12}FH + L'\Lambda_{22}FH + H'D''\Lambda_{22}FH]\beta_{12} + (-\Lambda_{22} + H'B'\Lambda_{11}BH +$$

$$+ H'B'\Lambda_{12}L + H'B'\Lambda_{12}DH + H'D'\Lambda_{12}'BH + L'\Lambda_{12}'BH + L'\Lambda_{22}L +$$

$$+ L'\Lambda_{22}DH + H'D'\Lambda_{22}L + H'D'\Lambda_{22}DH)\beta_{22}] \tag{37}$$

so, from (33) and (37)

$$0 = \Lambda_{22}FW + \Lambda_{12}'A\beta_{11}H' + \Lambda_{22}FH\beta_{11}H' + \Lambda_{12}'BH\beta_{12}'H' + \Lambda_{22}L\beta_{12}'H'$$

$$+ \Lambda_{22}DH\beta_{12}'H' \tag{38}$$

and from (34)

$$0 = \Lambda_{12}'A\beta_{12}H' + \Lambda_{22}FH\beta_{12}H' + \Lambda_{12}'BH\beta_{22}H' + \Lambda_{22}L\beta_{22}H' + \Lambda_{22}DH\beta_{22}H' \tag{39a}$$

Note that

$$0 = \Lambda_{12}'A\beta_{12} + \Lambda_{22}FH\beta_{12} + \Lambda_{12}'BH\beta_{22} + \Lambda_{22}(L+DH)\beta_{22} \tag{39b}$$

is sufficient for (39a) to be satisfied

Solving for F in (38) we get

$$F = -\Lambda_{22}^{-1}(\Lambda_{12}'A\beta_{11}H' + \Lambda_{12}'BH\beta_{12}'H' + \Lambda_{22}(L+DH)\beta_{12}'H')(w+H\beta_{11}H')^{-1} \tag{40}$$

and substituting (40) in (39b)

$$(L+DH) = \Lambda_{22}^{-1}\Lambda_{12}'A[-\beta_{12} + \beta_{11}H'(w+H\beta_{11}H')^{-1}H\beta_{12}]$$

$$[\beta_{22}-\beta_{12}'H'(w+H\beta_{11}H')^{-1}H\beta_{12}]^{-1} - \Lambda_{22}^{-1}\Lambda_{12}'BH \tag{41}$$

finally

$$F = -\Lambda_{22}^{-1}\Lambda_{12}'A[\beta_{11}H' + (-\beta_{12} + \beta_{11}H'(w+H\beta_{11}H')^{-1}H\beta_{12})$$

$$(\beta_{22}-\beta_{12}'H'(w+H\beta_{11}H')^{-1}H\beta_{12})^{-1}\beta_{12}'H'][w+H\beta_{11}H']^{-1} \tag{42}$$

Expanding (36) we obtain

$$\beta_{11} = A\beta_{11}A' + A\beta_{12}H'B' + BH\beta_{12}'A' + BH\beta_{22}H'B' + CVC' \tag{43}$$

$$\beta_{12}' = FH\beta_{11}A' + (L+DH)\beta_{12}'A' + FH\beta_{12}H'B' + (L+DH)\beta_{22}H'B' \tag{44}$$

$$\beta_{22} = FH\beta_{11}H'F' + FH\beta_{12}(L+DH)' + (L+DH)\beta_{12}'H'F' + (L+DH)\beta_{22}(L+DH)' +$$

$$+ FWF' \tag{45}$$

Let

$$S = (-\beta_{12} + \beta_{11}H'[w+H\beta_{11}H']^{-1}H\beta_{12})(\beta_{22} - \beta_{12}'H'[w+H\beta_{11}H']^{-1}H\beta_{12})^{-1}$$

Then, substituting F and (L+DH) into (44) and (45)

$$\beta'_{12} = -\Lambda_{22}^{-1}\,\Lambda'_{12}\,A(\beta_{11}H'[w+H\beta_{11}H']^{-1}\,H\beta_{11}A' + S\beta'_{12}H'[w+H\beta_{11}H']^{-1}\,H\beta_{11}A'$$

$$- S\beta'_{12}A' + \beta_{12}H'B') - \Lambda_{22}^{-1}\;\Lambda'_{12}\;BH(\beta'_{12}A' + \beta_{22}H'B') \tag{46}$$

$$\beta_{22} = \Lambda_{22}^{-1}\;\Lambda'_{12}\;A(\beta_{11}H'[w+H\beta_{11}H']^{-1}\,H\beta_{11}A' + S\beta'_{12}H'[w+H\beta_{11}H']^{-1}H\beta_{11}A'$$

$$- S\beta'_{12}A' + \beta_{12}H'B')\beta_{12}\;\;\Lambda_{22}^{-1} + \Lambda_{22}^{-1}\;\;\Lambda'_{12}BH(\beta_{22}H'B' + \beta'_{12}A')$$

$$\Lambda_{12}\;\;\Lambda_{22}^{-1} \tag{47}$$

So

$$\beta_{22} = -\,\beta'_{12}\;\;\Lambda_{12}\;\Lambda_{22}^{-1} \tag{48}$$

and since β_{22} is symmetric

$$\beta_{22} = -\,\Lambda_{22}^{-1}\;\;\Lambda'_{12}\;\;\beta_{12} \tag{49}$$

Expanding (35) we get

$$\Lambda_{11} = A'\;\Lambda_{11}A + A'\;\Lambda_{12}\;FH + H'F'\;\Lambda'_{12}A + H'F'\;\Lambda_{22}FH + R'H \tag{50}$$

$$\Lambda_{12} = A'\Lambda_{11}BH + A'\Lambda_{12}(L+DH) + H'F'\Lambda'_{12}BH + H'F'\Lambda_{22}(L+DH) \tag{51}$$

$$\Lambda_{22} = H'B'\Lambda_{11}BH + H'B'\Lambda_{12}(L+DH) + (L+DH) + (L+DH)'\Lambda_{12}BH +$$

$$+ (L+DH)'\Lambda_{22}\;(L+DH) \tag{52}$$

Substituting (41) and (42) in the above equations

$$\Lambda_{11} = A'\Lambda_{11}A - A'\Lambda_{12}\Lambda_{22}^{-1}\Lambda_{12}'A[\beta_{11}H' + S\beta_{12}'H'][w+H\beta_{11}H']^{-1}H -$$

$$- H'[w+H\beta_{11}H']^{-1}[H\beta_{11} + H\beta_{12}S']A'\Lambda_{12}\Lambda_{22}^{-1}\Lambda_{12}'A +$$

$$+ H'[w+H\beta_{11}H']^{-1}[H\beta_{11} + H\beta_{12}S']A'\Lambda_{12}\Lambda_{22}^{-1}\Lambda_{12}'A$$

$$[\beta_{11}H' + S\beta_{12}'H'][w+H\beta_{11}H']^{-1}H + H'H \tag{53}$$

$$\Lambda_{12} = A'[\Lambda_{11} - \Lambda_{12}\Lambda_{22}^{-1}\Lambda_{12}']BH + A'\Lambda_{12}\Lambda_{22}^{-1}\Lambda_{12}'AS -$$

$$- H'[w+H\beta_{11}H']^{-1}[H\beta_{11} + H\beta_{12}S']A'\Lambda_{12}\Lambda_{22}^{-1}\Lambda_{12}'AS \tag{54}$$

$$\Lambda_{22} = H'B'[\Lambda_{11} - \Lambda_{12}\Lambda_{22}^{-1}\Lambda_{12}']BH + S'A'\Lambda_{12}\Lambda_{22}^{-1}\Lambda_{12}'AS \tag{55}$$

So, in order to find the compensator that will provide the minimum variance control we need to solve equations (46), (47), (48), (53), (54), and (55). Note that we can reduce the number of equations that must be satisfied by one, if we substitute (48) in the others. Observe also that Λ_{22} as well as $(w+H\beta_{11}H')$ have to be nonsingular. Although these equations seem to be very complicated, recall that H and (L+DH) are very simple matrices. Thus a lot of simplification will appear during the computations.

Even though the above equations are more tractable than the ones encountered in the previous section, they do not give us in a simple way

the parameters of the compensator. For this reason, in the next section we will develop a direct method to obtain the compensator for a system with perfect measurements, i.e., $W = 0$, that involves only a simple polynomial division.

4. MINIMUM VARIANCE CONTROL OF AN OUTPUT NOISE-FREE SYSTEM--DIRECT METHOD 2

The idea behind this method is to put the output of the plant at time t+1 as a function of the inputs up to time t, the outputs up to time t-1, and the internal noise of times t and t-1. Once this is achieved we equate the equations of the input and output to obtain the structure of the compensator. The reason we set the output at time t+1 as a function of the outputs up to time t-1 and not up to time t, is because we want the compensator to compute each new input as a function of the past measurements available and not to include present information, in order to avoid the problems mentioned in the introduction to this chapter.

We again are given a plant of the form

$$y(t+n) + a_{n-1}y(t+n-1) + \dots + a_0 y(t) = b_{n-1}\, u(t+n-1) + \dots + b_0\, u(t) + c_{n-1}v(t+n-1) + \dots + c_0 v(t) \qquad (1)$$

We can compute the transfer function of the system as

$$y(t) + \frac{B^*(z)}{A^*(z)}\, u(t-1) + \frac{C^*(z)}{A^*(z)}\, v(t-1) \qquad (2)$$

where

$$A^*(z) = 1 + a_{n-1}z^{-1} + \ldots + a_0 z^{-n}$$

$$B^*(z) = b_{n-1} + b_{n-2}z^{-1} + \ldots + b_0 z^{-n+1}$$

$$C^*(z) = c_{n-1} + c_{n-2}z^{-1} + \ldots + c_0 z^{-n+1}$$

so

$$y(t+1) = \frac{B^*(z)}{A^*(z)} u(t) + \frac{C^*(z)}{A^*(z)} v(t) \tag{3}$$

It follows from (2) that we can compute $v(t-2)$, $v(t-3)$,... from the information available at time t. To do this explicitly we rewrite (3) using the identity

$$C^*(z) = A^*(z)F^*(z) + z^{-2}G^*(z) \tag{4}$$

where F^* and G^* are polynomials of degrees 1 and n-1 respectively as

$$y(t+1) = \frac{B^*(z)}{A^*(z)} u(t) + F^*(z)v(t) + \frac{G^*(z)}{A^*(z)} v(t-2) \tag{5}$$

From (2) we can see that

$$v(t-2) = \frac{A^*(z)}{C^*(z)} y(t-1) + \frac{B^*(z)}{C^*(z)} u(t-2) \tag{6}$$

Substitutiong (6) in (5) we obtain

$$y(t+1) = \frac{B^*(z)}{A^*(z)} - \frac{G^*(z)B^*(z)z^{-2}}{A^*(z)C^*(z)} u(t) + \frac{G^*(z)}{C^*(z)} y(t-1) + F^*(z)v(t) \tag{7}$$

which reduces to

$$y(t+1) = \frac{B^*(z)F^*(z)}{C^*(z)} u(t) + \frac{G^*(z)}{C^*(z)} y(t-1) + F^*(z)v(t) \tag{8}$$

We are now ready to compute the variance of the output, as was pointed

out earlier

$$E(y^2(t+1)) = E[(F^*(z)v(t))^2] + E[(\frac{G^*(z)}{C^*(z)} y(t-1) + \frac{B^*(z)F^*(z)}{C^*(z)} u(t))^2] \tag{9}$$

Observe that the mixed terms will vanish because $v(t)$ and $v(t-1)$ are independent of $y(t-1)$, $y(t-2)$,.... Therefore the second term in (9) will only increase the variance of $y(t+1)$, hence

$$E(y^2(t+1)) \geq (f_0^2 + f_1^2)V \tag{10}$$

where equality holds for

$$u(t) = - \frac{G^*(z)}{B^*(z)F^*(z)} y(t-1) \tag{11}$$

So, the transfer function of the minimum variance compensator is given by

$$u(t) = - \frac{g_{n-1} + g_{n-2}z^{-1} + \ldots + g_0 z^{-n+1}}{(b_{n-1} + b_{n-2}z^{-1} + \ldots + b_0 z^{-n+1})(f_1 + f_0 z^{-1})} y(t-1) \tag{12}$$

Note that if either b_{n-1} or f_1, or for the same purpose b_{n-1} or c_{n-1} is equal to zero, the structure of the compensator found this way will not be desirable since $u(t)$ would depend on $y(t)$. If this was the case, it is obvious that following the same procedure outlined above we can obtain a compensator that will satisfy the desired structure.

As was mentioned before, note that the parameters of the compensator are obtained basically from the polynomial divison in (4). So this technique presents a very simple way of finding the minimum variance

compensator. The only drawback of this method is that the measurements are assumed to be perfect, i.e., no noise affects the sensors. This assumption is highly idealized, since every sensor has at least some internal noise generated, that will influence the accuracy of the measurements. But if this perturbation is small, the solution obtained in (12) is very accurate.

CHAPTER V

EXAMPLE

In this chapter we solve a simple problem using the direct method 2 and then we corrolate the answer by showing that it satisfies the necessary conditions found for the matrix approach.

1. DIRECT METHOD 2

Let us assume that we have a second order plant governed by

$$y(t+2) - y(t) = u(t+1) + 2u(t) + 2v(t+1) \tag{1}$$

then the transfer function of the system is

$$y(t) = \frac{1 + 2z^{-1}}{1 - z^{-2}} u(t-1) + \frac{2}{1 - z^{-2}} v(t-1) \tag{2}$$

Since

$$2 = 2(1-z^{-2}) + 2z^{-2} \tag{3}$$

We find that the compensator is given by

$$u(t) = \frac{-2}{(1+2z^{-1})(2)} y(t-1) \tag{4}$$

So

$$u(t+2) + 2\,u(t+1) = -\,y(t+1) \tag{5}$$

and the output variance is given by

$$E(y^2(t)) = 4V$$

2. MATRIX APPROACH

From (1) and (5) we find that

$$A = \begin{bmatrix} 0 & 1 \\ 1 & 0 \end{bmatrix} \quad B = \begin{bmatrix} 2 \\ 1 \end{bmatrix} \quad C = \begin{bmatrix} 0 \\ 2 \end{bmatrix} \quad H = [0 \quad 1]$$

$$(L+DH) = \begin{bmatrix} 0 & 0 \\ 1 & -2 \end{bmatrix} \quad F = \begin{bmatrix} 0 \\ -1 \end{bmatrix}$$

and we want to show that D and F as given above satisfy the necessary conditions obtained in section three of the previous chapter. To do this we show that there is a Λ_{11}, Λ_{12}, Λ_{22}, β_{11}, β_{12}, and β_{22} that will give us the above values for F and D.

Note that the pairs (A,B) and (A,c) are controllable. Let

$$\Lambda_{11} = \begin{bmatrix} \Lambda_{111} & \Lambda_{112} \\ \Lambda_{112} & \Lambda_{113} \end{bmatrix} \quad \Lambda_{12} = \begin{bmatrix} \Lambda_{121} & \Lambda_{122} \\ \Lambda_{123} & \Lambda_{124} \end{bmatrix} \quad \Lambda_{12} = \begin{bmatrix} \Lambda_{221} & \Lambda_{222} \\ \Lambda_{222} & \Lambda_{223} \end{bmatrix}$$

and

$$\beta_{11} = \begin{bmatrix} \beta_{111} & \beta_{112} \\ \beta_{112} & \beta_{113} \end{bmatrix} \quad \beta_{12} = \begin{bmatrix} \beta_{121} & \beta_{122} \\ \beta_{123} & \beta_{124} \end{bmatrix} \quad \beta_{22} = \begin{bmatrix} \beta_{221} & \beta_{222} \\ \beta_{222} & \beta_{223} \end{bmatrix}$$

From

$$\Lambda_{11} = A'\Lambda_{11}A + A'\Lambda_{12}FH + H'F\Lambda_{12}'A + H'F'\Lambda_{22}FH + H'H \quad .$$

we get that

$$\Lambda_{111} = \Lambda_{113} \qquad \Lambda_{124} = 0 \qquad \Lambda_{223} = 2\Lambda_{122}-1$$

From

$$\Lambda_{12} = A'\Lambda_{11}BH + A'\Lambda_{12}(L+DH) + H'F'\Lambda_{12}'BH + H'F'\Lambda_{22}(L+DH)$$

we obtain

$$\Lambda_{121} = 0 \qquad \Lambda_{122} = 4-3\Lambda_{111} \qquad \Lambda_{112} = 2-2\Lambda_{111}$$

$$\Lambda_{123} = -5+3\Lambda_{111} \qquad \Lambda_{223} = 7-6\Lambda_{111}$$

and from

$$\Lambda_{22} = H'B'\Lambda_{11}BH + BH + H'B'\Lambda_{12}(L+DH) + (L+DH)'\Lambda_{12}BH +$$

$$+ (L+DH)'\Lambda_{22}(L+DH)$$

we get

$$\Lambda_{221} = 7-6\Lambda_{111} \qquad \Lambda_{222} = -6+6\Lambda_{111} \qquad \text{and } \Lambda_{111} = 1$$

Then

$$\Lambda_{11} = \begin{bmatrix} 1 & 0 \\ 0 & 1 \end{bmatrix} \qquad \Lambda_{12} = \begin{bmatrix} 1 & 0 \\ -2 & 0 \end{bmatrix} \qquad \Lambda_{22} = \begin{bmatrix} 1 & 0 \\ 0 & 1 \end{bmatrix}$$

From

$$\beta_{11} = A\beta_{11}A' + A\beta_{12}H'B' + BH\beta_{12}'A' - BH\Lambda_{22}^{-1}\Lambda_{12}'\Lambda_{12}H'B' + CVC'$$

we obtain

$$\beta_{124} = 0 \qquad \beta_{122} = \beta_{113} - \beta_{111} - 4V \qquad \beta_{122} = \frac{4}{3}V$$

From

$$\beta_{12} = A\beta_{11} H'F' + A\beta_{12}(L+DH) + BH\beta'_{12} H'F' - BH \Lambda_{22}^{-1} \Lambda'_{12} \Lambda_{12}(L+DH)$$

we get

$$\beta_{121} = 0 \qquad \beta_{123} = 0 \qquad \beta_{124} = 0 \qquad \beta_{112} = 0$$

$$\beta_{113} = 4V \qquad \beta_{111} = -\frac{4}{3}V$$

and from

$$\beta_{22} = -\Lambda_{22}^{-1} \Lambda'_{12} \beta_{12}$$

we get

$$\beta_{221} = 0 \qquad \beta_{222} = 0 \qquad \beta_{223} = -\frac{4}{3}V$$

Then

$$\beta_{11} = \begin{bmatrix} -\frac{4}{3}V & 0 \\ 0 & 4V \end{bmatrix} \quad \beta_{12} = \begin{bmatrix} 0 & \frac{4}{3}V \\ 0 & 0 \end{bmatrix} \quad \beta_{22} = \begin{bmatrix} 0 & 0 \\ 0 & -\frac{4}{3}V \end{bmatrix}$$

Substituting these results in

$$\Lambda'_{12}A \beta_{11} H' + \Lambda_{22}FH\beta_{11}H' + \Lambda'_{12}BH \beta'_{12}H' + \Lambda_{22}(L+DH)\beta'_{12}H'$$

and

$$\Lambda'_{12} A\beta_{12} + \Lambda_{22}FH\beta_{12} + \Lambda'_{12} BH\beta_{22} + \Lambda_{22}(L+DH)\beta_{22}$$

we see that both become equal to zero, which was the result we expected. We then conclude that the compensator described by the above F and D

gives a minimum variance control strategy.

Note that $E(y^2(t))$ is given in this case by

$$E(y^2(t)) = tr\ (\Lambda_{11}\ CVC') = 4V$$

which is the same result obtained with the direct method 1.

REMARKS:

In chapter four we discussed three different methods to obtain a compensator that would minimize the variance of the output of a discrete time linear time invariant single input single output system. As was seen in the second section further study in this problem is required to be able to find the desired compensator using the direct method 1. Also, from section three, more insight into this kind of problems will prove to be of great help in order to find the compensator structure. Maybe, some easier equations would develop if the compensator is found in two steps a) a form of observer plus b) a matrix of gains. Some analysis to establish if the necessary conditions found with this matrix approach give a unique solution or if a stable compensator can always be found would be a very interesting topic to work on. Some other lines of study around this problem could be to generalize the three methods to the multiple input-multiple output case. It would be also very interesting to find if the insertion of noise in the measurements, working with the direct method 2, gives any results.

REFERENCES

(A1) K. I. Astrom, "Introduction to Stochastic Control Theory", New York: Academic Press, 1970.

(A2) M. Athans, "The Matrix Minimum Principle", Information and Control, Vol. 11, Dec. 1967, pp. 592-606.

(A3) M. Athans and P. L. Falb, "Optimal Control", New York: McGraw-Hill, Inc., 1966.

(B1) P. J. Blanvillain, "Optimal Compensator Structure for Linear Time Invariant Plant with Inaccessible States", Report ESL-R-546, M.I.T., May, 1974.

(B2) P. J. Blanvillain and T. L. Johnson, "Invarients of Optimal Minimal-Order Observer-Based Compensators",

(B3) R. W. Brockett, "Finite Dimensional Linear Systems", New York: John Wiley and Sons, Inc., 1970.

(D1) M. I. Denham, "Canonical Forms for the Identification of Multi-varianble Linear Systems", IEEE Trans. Auto. Control, Vol. AC-19, No. 6, December 1974, pp. 646-656.

(D2) B. W. Dickinson, T. Kailath and M. Morf, "Canonical Matrix Fraction and State Space Descriptions for Deterministic and Stochastic Linear Systems", IEEE Trans. Auto. Control, Vol. AC-19, No. 6, December 1974, pp. 656-666.

(F1) D. K. Faddeev and I. S. Sominskii, "Problems in Higher Algebra", Second Edition, Moscow, 1949.

(F2) T. E. Fortman and D. Williamson, "Design of Low Order Observers for Linear Feedback Control Laws", IEEE Trans. Auto. Control, Vol. AC-17, No. 3, June 1972, pp. 301-308.

(F3) W. H. Fleming and R. W. Rishel, "Deterministic and Stochastic Optimal Control", New York: Springer-Verlag, 1975.

(G1) F. R. Gantmacher, "The Theory of Matrices", Vol. 1, New York: Chelsea 1959.

(H1) B. L. Ho and R. E. Kalman, "Effective Construction of Linear State Variable Models from Input/Output Functions", Regelungstechnik, Vol. 12, 1966, pp. 545-548.

(K1) H. Kwakernaak and R. Sivan, Linear Optimal Control Systems , New York: John Wiley and Sons, Inc, Inc., 1972.

(L1) D. G. Luenberger, "An Introduction to Observers", IEEE Trans. Auto. Control, Vol. AC-16, No. 6, December 1971, pp. 785-793.

(L2) B. Llorens-Ortiz, "On the Optimal Minimum Order Observer-Based Compensator and the Limited State Variable Feedback Controller", Report ESL-R-732, M.I.T., September 1976.

(L3) W. S. Levine, "Optimal Output Feedback Controller for Linear Systems", M.I.T., Report ESL-R-374, February 1969.

(L4) W. S. Levine, T. L. Johnson and M. Athans, "Optimal Limited State Variable Feedback Controllers for Linear Systems", IEEE Trans. Auto. Control, Vol. AC-16, No. 6, December 1971, pp. 785-793.

(M1) R. A. Miller, "Specific Optimal Control of the Linear Regulator Using a Minimal Order Observer", Int. J. Control, Vol. 18, No. 1, 1973, pp. 139-159.

(N1) M. M. Newman, "Specific Optimal Control of the Linear Regulator Using a Dynamical Controller Based on the Minimal-Order Luenberger Observer", Int. J. Control, Vol. 12, July 1970, pp. 33-48.

(O1) A. V. Oppenheim and R. W. Schafer, "Digital Signal Processing", New Jersey: Prentice-Hall, Inc., 1975.

(P1) V. M. Popov, "Some Properties of the Control Systems with Irreducible Matrix-Transfer Functions", Lecture Notes in Mathematics No. 144, Berlin, Germany: Springer Verlag 1969,pp. 169-180.

(P2) L. Padulo and M. A. Arbib, "System Theory", Washington: Hemisphere Publishing Corporation, 1974.

(P3) E. Polak, "An Algorithm for Reducing a Linear, Time Invariant Differential System to State Form", IEEE Trans. Auto. Control, Vol. AC-11, 1966, pp. 577-579.

(R1) H. H. Rosenbrock, "Computer-Aided Control System Design", Academic Press, Inc., London, 1974.

(R2) D. B. Rom and P. E. Sarachick, "The Design of Optimal Compensators for Linear Constant Systems with Inaccessible States", IEEE Trans. Auto. Control, Vol. AC-18, No. 5, October 1973, pp. 509-512.

(W1) W. A. Wolovich, "The Determination of State Space Representation for Linear Multivariable Systems", Automatica, Vol. 9, 1973, pp. 97-106.

(W2) W. A. Wolovich and P. L. Falb, "On the Structure of Multivariable Systems", SIAM J. Control, Vol. 7, No. 3, August 1969, pp. 437-443.

(Y1) Y. O. Yuksel and J. J. Bongiorno, Jr.; "Observers for Linear Multivariable Systems with Applications, IEEE Trans. Auto. Control, Vol. AC-16, No. 6, December 1971, pp. 603-613.