General Disclaimer

One or more of the Following Statements may affect this Document

- This document has been reproduced from the best copy furnished by the organizational source. It is being released in the interest of making available as much information as possible.

- This document may contain data, which exceeds the sheet parameters. It was furnished in this condition by the organizational source and is the best copy available.

- This document may contain tone-on-tone or color graphs, charts and/or pictures, which have been reproduced in black and white.

- This document is paginated as submitted by the original source.

- Portions of this document are not fully legible due to the historical nature of some of the material. However, it is the best reproduction available from the original submission.

Produced by the NASA Center for Aerospace Information (CASI)

NASA Technical Memorandum 78486

An Inductively Powered Telemetry System for Temperature, EKG, and Activity Monitoring

Thomas B. Fryer, Gordon F. Lund, and
Bill A. Williams

(NASA-TM-78486) AN INDUCTIVELY POWERED TELEMETRY SYSTEM FOR TEMPERATURE, EKG, AND ACTIVITY MONITORING (NASA) 43 p HC A03/MF A01 CSCL 06B
N78-23706
Unclas
G3/51 16730

May 1978

JUN 1978
RECEIVED

National Aeronautics and
Space Administration

NASA Technical Memorandum 78486

An Inductively Powered Telemetry System for Temperature, EKG, and Activity Monitoring

Thomas B. Fryer
Gordon F. Lund
Bill A. Williams, Ames Research Center, Moffett Field, California

National Aeronautics and
Space Administration

Ames Research Center
Moffett Field, California 94035

An Inductively Powered Telemetry System for Temperature, EKG, and Activity Monitoring

Thomas B. Fryer, Gordon F. Lund,* and Bill A. Williams

Ames Research Center, NASA, Moffett Field, Calif. 94035

Abstract. An implant telemetry system for the simultaneous monitoring of temperature, activity, and EKG from small animals, such as rats, has recently been designed with the novel feature that instead of a battery the system is energized by an inductive field. A 250 kHz resonant coil surrounds the cage (30 x 30 x 20 cm) and provides the approximately 100 μW of power required to operate the implant transmitter while allowing the animal unrestrained movement in the cage. The implant can also be battery operated if desired. RF transmission is in the 8-10 MHz band, which allows the use of a simple, essentially single IC chip, receiver.

Running Head. Inductively Powered Telemetry System

Key Words. Biotelemetry, Implant, Temperature, EKG, Inductive power, Activity

*This work supported by the National Research Council Research associate program and by subsequent grant from NASA (#NSG 2293) through San Jose State University.

Introduction

The telemetry system to be described measures temperature, activity, and EKG simultaneously from small caged animals such as rats. Many individual systems for temperature[5] and EKG[1] and some combination units[7] have been described previously, but all are battery powered. The unique feature of this system is that it can be inductively powered from a tuned resonant coil surrounding the cage. A number of problems inherent with battery powered systems are thus eliminated and unlimited operating life is possible. However, inductive power has disadvantages and limitations which must be evaluated. The transmitter design is not restricted to inductive powered operation though, and can alternatively be battery powered with a 2.7 to 3V lithium cell or two mercury or silver oxide cells if this choice is advantageous.

The system uses pulse interval modulation (PIM) of an 8 to 9 MHz carrier frequency for data transmission. For temperature, the technique of alternately sampling a thermistor (temperature transducer) and a precision resistor as described previously[2,5] is utilized in this new system because of its inherent accuracy. After the two measurements are converted to PIM and transmitted, the ratio between the reference (precision resistor) and the temperature (thermistor) period is taken in the demodulator to correct the possible modulation and transmission errors. Since temperature data changes very slowly the higher frequency EKG signal is merely superimposed upon the temperature data.

A carrier frequency in the range of 8 to 9 MHz was selected since it is satisfactory for the short operating distance required of less than 1 m, and it is then possible to use a CA 3089 integrated circuit (IC)

device as almost the entire receiver which greatly simplifies this part of the equipment. Previous temperature implants designed by the first author[2] used frequencies in the 90 to 110 MHz region. Although this allows operation up to 15 to 20 m it is not necessary for the 0 to 1 m range and requires a much more complicated receiver. A radio frequency (RF) shield can be placed around the cage to prevent radiation if regulatory frequency assignments are of concern.

A 3V instead of a 1.35V power source for the implant makes the use of CMOS devices and low powered analog integrated circuits possible. The higher voltage increases the battery size when such a power source is used, but does not affect the size with inductive power. Although a number of discrete transistors and nonactive components are required, the maximum use of ICs reduces manufacturing costs and package size.

SYSTEM DESIGN

Transmitter

The transmitter uses the previously developed ratio technique[2,5] for the accuracy required in temperature measurement where normal body temperature changes are only a few degrees centigrade or less. The technique requires a multivibrator, divide by two circuit, and switching circuits which lend themselves ideally to the use of digital CMOS devices. In the original temperature and EKG designs[2,5] made over 10 years ago, low voltage low power ICs were not available and it was necessary to use discrete components. It is still not possible to operate ICs at 1.35V except for a few specialized devices made for single battery watch applications or custom ICs.[8] Therefore, to use the standard readily

available CMOS devices, a 2.7V minimum supply level is necessary. For battery operation this would significantly increase the implant size, but with the inductive operation to be described this is not a factor. The principal advantage of ICs are that they simplify the fabrication and lower the manufacturing cost.

By combining the temperature and EKG transmission from a single device, a savings in size over using individual transmitters is accomplished. The EKG signal is amplified and ac coupled to the temperature circuit in order to modulate the interval between pulses with each heart beat. Since the EKG signal is capacitor coupled it does not interfere with the slowly changing essentially static temperature data. The ac coupled EKG does not present any accuracy problems as contrasted with the special care required to make useful temperature measurements.

Figure 1 shows both a block diagram and a detailed circuit diagram of the transmitter (implant) portion of the system. A CD 4047 CMOS device serves as the basic multivibrator. The oscillator period is proportional to the RC time constant. Using a CD 4066 switch driven by the CD 4047 multivibrator, a thermistor (T) and a 500K precision resistor R_1 are alternately connected to a common 2700 pF capacitor for timing. The positive and negative timing cycle of a multivibrator are normally different due to the gates having unsymmetrical trigger points. This variability must be eliminated to obtain a precise ratio between T and R_1. By using the built-in divided-by-two binary to drive the switches A and B, each period t_1 and t_2 is the average of one positive and one negative cycle of the multivibrator as seen in Figure 2. The system

then provides an extremely accurate measure of the ratio of R_1 to T. For instance any variation in the 2700 pF capacitor does not affect the output reading since it is common to the timing of both R_1 and T. Switches C and D allow the amplified EKG signal to provide transient modulation of the period. The superimposed EKG signal is ac coupled and thus does not affect the slowly changing static temperature measurements.

The typical system waveforms are seen in figure 2. The reference period t_1 is controlled by R_1 C and is relatively stable except to correct for system errors. The period T_2 is a function of the thermistor temperature. The EKG signal varies t_1 dynamically but has no effect on the average value of t_1. As seen in figure 2 a short pulse is generated at the start of each transition of Q but with two different pulse lengths so that t_1 and t_2 can be identified in the demodulator. An 8 to 9 MHz oscillator turned on each pulse provides the RF signal for transmission.

The duration of the two pulse lengths is set for approximately 50 and 100 msec durations. Period t_1 plus t_2 is approximately 5 to 6 msec at 37°C to provide a sample rate of around 160 samples/sec. A 50 to 60 Hz data bandwidth is then feasible with a normal filter in the demodulator (80 Hz theoretical maximum since two samples per cycle are required according to Shannon's theorem). This bandwidth, however, does not provide all the minute high frequency EKG waveform details but is adequate for most applications where only the heart rate is of interest. A rat, as an example, has a normal heart rate of 5 to 6 beats per sec (bps) with a maximum as high as 10 bps. A minimum frequency response of 50 to 60 Hz was needed in order not to diminish the rapid ± excursion of the QRS complex. Figure 3 shows a typical rat EKG recording with

waveform detail. The signal to noise ratio between the QRS complex (used for heart rate triggering) and the other lower frequency noise components would suffer if the cut off frequency was below 50 Hz. Conversely a higher sample rate allows a wider data bandwidth but increases power consumption. Most of the circuit power is consumed in the output stage with its radiating coil since the CMOS devices and other signal conditioning require only a few microamps of current. The average power in the output stage is reduced by transmitting only a short 50 and 100 μsec pulses at the sample rate. The average power then is reduced by the ratio of the pulse length to the interval between pulses or duty cycles. Since there is a minimum acceptable pulse length due to receiver bandwidth and transmitter settling time requirements, the use of a minimum sample rate is desirable to lower power consumption. For battery operation this is of vital concern. Even with inductively powered operation, minimum power is important to allow maximum freedom of motion. Consequently the sample rate is a compromise between the above considerations. Transmitters of this same design but for temperature measurements only can use a lower sample rate (approximately 10 to 20 samples/sec) for minimum power drain since temperature changes slowly. Of course if a more detailed EKG waveform is important the sample rate can be increased at the expense of higher current drain.

Logic control of two switching transistors by the CD4047 provides the long and short pulses needed to periodically turn the output oscillator (Colpitts oscillator in the 8 to 9 MHz region) on and off. This carrier frequency then inductively couples to the receiving pickup loop. Since the operating distance is a small fraction of the wavelength at

8 to 9 MHz, coupling is inductive and not by RF radiation. A small cylindrically shaped ferrite core approximately 7 mm diam x 7 mm with 12 or so turns ($L \approx 4\ \mu H$) serves as the inductor in the oscillator tank circuit and radiating coil.

Figure 4 shows the assembled transmitter potted and sealed ready for implantation. This unit is fabricated with the necessary discrete parts and flat pack ICs (RCA CD4047AK, CD4066AK and Siliconix L144CL). Although these parts have been assembled in an extremely compact fashion, a further reduction in size would be possible by using hybrid construction techniques as discussed in reference 4. The transmitter as fabricated though is adequately small for implantation in 200 g or larger rats. The main electronic package is implanted in the peritoneal cavity with the electrodes placed in the lead II configuration across the sternum.

Carrier Frequency Selection

A number of factors have been instrumental in the selection of the 8 to 9 MHz carrier frequency used in this system. As in most situations many factors enter into the final compromise solution. The purpose of this design is to obtain the optimum system for use with small caged animals where operating distances seldom exceed 1 m. For the reasons detailed below, the 8 to 9 MHz frequency range appears to be the best choice to meet this objective.

The simplicity of the receiver at this frequency coupled with adequate range is probably the most significant consideration. If large numbers of animals and transmitters are to be monitored, low cost and simplicity of the receiver is important. In the 10 MHz range it is

possible to use a 10.7 MHz intermediate frequency (IF) amplifier (standard in FM receivers) as the complete receiver without the need for a superhet design. Slight adjustments above and below 10.7 MHz makes it possible to avoid interference from nearby receivers. The recent availability of the CA 3089 integrated circuit IF system to replace the multiple IF stages further increases the attractiveness of this approach. As seen in the next section, a complete receiver requires only a CA 3089 plus a transistor and IF transformer. Inexpensive 10.7 MHz IF transformers are readily available and are easily adjusted for use in the 8 to 13 MHz range.

One of the difficulties experienced in the past[2] is that transmitters in the 80 to 108 MHz range change as much as 1 to 2 MHz after implantation. Because a small capacitor (typically 10 pF) is used in the tank circuit at this frequency range, the circuit is very susceptible to distributed capacity changes. A sizeable frequency shift will usually occur when the transmitter is moved from air to the implant situation where it is surrounded by the conductive tissue and fluids of the body. Although this effect can be compensated for by an initial offset, the change is not always constant or precisely predictable. More important small frequency changes are likely to occur over a period of time due to the sensitivity to small capacitance changes which in turn require periodic receiver adjustment. Such manual adjustments and surveillance, especially if many transmitter receivers are in use, make 24-hr automatic operation difficult without loss of data. A crystal controlled transmitter is a possible alternative but results in increased size and cost. This solution is also less than optimal since the output

stage in a crystal controlled transmitter must be closely adjusted to the crystal frequency. Thus any changes in the distributed capacity of the tank coil circuit result in a loss of radiated power.

The susceptibility to frequency change is greatly minimized by selecting a lower frequency (8 to 9 MHz). As seen in figure 1 the 100 pF and 470 pF in series is equivalent to approximately 80 pF in the tank circuit so that distributed capacity effects have only slight effect on the frequency. The receiver has only a tuned antenna and one transformer stage with a 3 db bandwidth of approximately ±300 kHz so some transmitter drift is easily accommodated without receiver adjustment. By having all the transmitters adjusted to the same frequency, transmitters and receivers can be interchanged easily as needed without adjustment. The receiver bandwidth is broad enough that the transmitter frequencies need only be set within a range of ±100 to 200 kHz for satisfactory operation. Of course, multiple transmitter operation set with a broad range on the receiver and all the transmitters at the same frequency results in some disadvantages. Namely, it is necessary to shield between cages or possibly space them 30 to 50 cm apart to prevent interference between signals from different animals.

The transmission distance is greatly influenced by the radiation coil in the animal as well as the receiving coil. The larger the radiating coil the greater will be the operating range. The constraint on the coil dimensions is usually the size of the experimental animal. The ferrite core/coil used is more compact than an air-core coil of equal inductance (4 μH), but either type can be used. Since the field strength of inductive coupling diminishes as the cube of distance,

the operating range is very limited. RF radiation is inversely proportional to distance (first power) so is much more effective for long range transmission. To obtain effective RF radiation the coil dimensions must approach 1/4 λ, and this necessitates the use of a very high frequency for small animals. A more detailed discussion of near and far field transmission is given in Chapter 10 of Biomedical Telemetry by R. Stuart Mackay[9]. The same signal generator and conditioner as described above can be used with a higher carrier frequency by changing the tank circuit values (capacitor and inductor). The 88 to 108 MHz range works well for small transmitters where greater range is required (see ref. 2). A suitable matching receiver must of course then be used.

It should be pointed out that the particular design that has been presented in this article is not restricted to use in the 8 to 13 MHz region. For instance a number of transmitters at different frequencies within or outside of the above range can be used with more receiver selectivity. Tuning adjustments would probably also be needed in the receiver. Ceramic filters (as in FM receivers) can be used to provide greater selectivity and to allow closer spacing between the transmitter frequencies.

The primary limitation in the use of the frequency band selected is the inability to provide an effective radio transmitting antenna for a small animal. The inductive mode of transmission has very limited range but is adequate for the objectives of this design. Modification of the transmitter coil can provide some increase in range but beyond this a higher frequency must be used for ever greater range, and the frequency selection is then limited by regulatory controls.

Receiver

The receiver circuit for the 8 to 9 MHz pulse transmitted by the implant is shown in figure 5. The system actually consists of two separate receivers whose outputs are combined to reduce the possibilities of nulls. Each receiver uses a ferrite rod antenna arranged orthogonally in the cage. The coil on the rod is tuned with a capacitor to be resonant at the 8 MHz transmitter frequency. A one-stage MOSFET amplifier and an IF transformer output stage are used as a preamp. This is followed by a CA 3089 Integrated circuit amplifier. The CA 3089 provides a number of significant functions within a single package. It has a three-stage amplifier with individual level detectors, quadrature FM detector, and an audio output. Only the three stage amplifier and level detectors are utilized since the incoming signal is not FM. The minimum detection level is specified at 12 μV, and as each stage limits a semilog, input-output ratio is obtained. For instance a 100,000 μV provides approximately a 5V output so the device is useful over a very wide dynamic range. In this application only the timing of the pulses and not the amplitude is important. Since the final stage in the receiver is a CA 3130 with a saturated pulse output, the nonlinear limiting function in the CA 3089 is useful. Pin 13 of the CA 3089 is the level detector output. This consists of a short and long pulse (50 and 100 μsec) like that generated in the transmitter and shown as the PIM signal in figure 2.

Two receivers are used to provide more complete coverage. The signal picked up by each receiving antenna is a function of the flux put out by the transmitter that links the pickup coil. Since the transmitted flux

radiates in all directions, three dimensionally, the flux linking the pickup coil diminishes rapidly with distance. Coupling is also a function of the relative orientation of the two coils. Maximum coupling is achieved when the axis of the two coils are parallel and is reduced proportionally to the cosine of the angle between them. Figure 6 illustrates graphically the relation between the transmit and pickup coils and also the energizing coil. Since providing the energy to the implant is the most difficult aspect without excessive field strength, the vertical axis is used for the 240 kHz energizing system. To minimize interference between the high powered energizing circuit and the sensitive receiving circuit, the axis of the receiving coils and the energizing coil are placed orthogonally. As a consequence the axis of the transmit coil is normally parallel to the floor of the cage when the animal is standing on four legs. The cosine of 45° is only 0.707 so the reduction in signal is minor until approaching 90°. The close location of the pickup coils to the transmit coil provides very strong signals in the favorable position, and therefore even with a cosine of 84° an adequate 10% of the signal strength would be obtained. By having two orthogonal coils the coverage is nearly complete, and only in the unusual situation with the animal standing on two legs and achieving a 90° angle between the coils would a null occur. A third coil vertically placed with a third receiver could be used if this were desired. A vertical oriented coil, however, would pick up considerable 240 kHz signal and may require more rejection of this frequency than in the present design.

Even though the energizing coil and the pickup coils are placed orthogonally, some 240 kHz signal, because of its very great power, will

reach the receiver. The input coil is resonant at 8 MHz to accentuate the carrier frequency and to attenuate the 240 kHz signal. The 47 pF coupled to a 10K resistor then further attenuates the lower frequency but not the desired 8 MHz. The tuned transformer provides further filtering in the next stage. If a third vertical ferrite pickup coil were used, additional discrimination of the 240 kHz might be needed. The receiver has purposely been designed with just two tuned stages so that the bandwidth is fairly broad. Hence, the system is tolerant of small frequency changes in the transmitter and tuning is not too critical. The disadvantage of a broad timed receiver is the requirement for shielding or spacing when more than one cage is used in order to prevent extraneous pickup. A more complex receiver with tuning control and high selectivity, using ceramic filters, for instance, could be designed if this were desired.

The typical CA 3089 output of each receiver is in the range of 0.2V to 3V. This represents a greater than 15 to 1 dynamic range because of the staged detectors built into the CA 3089. Actually, the dynamic range is more like 1000 to 1. A CA 3140 active filter is used to reduce random noise by bandwidth limiting. The outputs of the two receivers are summed in the next amplifier stage to provide a signal if at least one of the two receivers has an adequate signal. The last stage, a CA 3130, serves as a comparator to provide a saturated -6V to +6V pulse signal to operate the logic in the demodulator. The comparator has a 0.15V bias so that a pulse of less than this magnitude will not trigger the circuit. This bias also increases for pulses larger than 0.5V by use of an IN4154 rectifier that gives better noise immunity when larger pulses are received.

Demodulator

As shown in figure 7 the variable amplitude pulse 2a and the saturated pulse 3 are both connected to the demodulator. The circuit is used to condition the pulse interval signal and obtain an analog output proportional to the transmitted temperature and EKG. The first three Schmitt trigger NAND gates (CD 4093AE) provide a 10 μsec long pulse delayed by 75 μsec after the start of each input pulse at 3. The 75 μsec is designed to be half way between the short 50 μsec and long 100 μsec transmit pulses. Then by the use of AND logic the 10 μsec pulse appears only at 9 when the input is a long pulse and only at 10 when a short pulse is present. After these two outputs are obtained it is easy to drive a binary that has the complimentary outputs 13 and 5. The waveform of Q and $\overline{Q}$ of the transmitter as shown in figure 2 has been recreated in the demodulator with correct phasing to determine the period proportional to temperature and the period proportional to the reference.

The output 5 is connected to a 0.22 μF through a 680K resistor to obtain an average value of the square wave which is proportional to the temperature. Since the waveform at 5 is either -6V or +6V (determined by the power supply) the proportional period at each of the two levels determines the average value. For instance when the reference value equals the thermistor value the output is zero. This is also a useful reference point when calibrating the transmitter since the thermistor resistance is then precisely equal to the 500K reference resistor (fig. 1). The thermistor normally used in the transmitter is specified for 500K at 37°C so the zero output occurs approximately at the equivalent of 37°C. For temperatures above and below 37°C the voltage

change depends upon the thermistor sensitivity and the gain factor in the demodulator.

The output of the CA 3140 voltage follower is connected to a CA 3160 rate limit circuit for additional filtering. A gate controlled switch connects to the 1 μF filter capacitance and to a high input impedance CA 3140 voltage follower. This switch is controlled by a triple input NAND gate that can turn the switch "off" on command and allow long-term data-point storage on the 1 μF capacitor. External gate control is provided in case holding of the data to synchronize with some external data recorder is required. A second gate connects to TP-6 which is normally +6V but goes to -6V whenever the input signal is lost or noise pulses come in. This action is controlled by a LM 307 integrator. The EKG signal is recovered by gating a switch connected to the integrator output that fluctuates in amplitude according to the modulation in the transmitter. A CA 3140 connected as a voltage follower reads the levels on a 0.22 μF capacitor. This is followed by a 50 Hz low pass filter that eliminates any residual 160 Hz sample frequency and provides an EKG output signal.

The calibration of the transmitter is carried out as follows. The transmitter, sealed and ready for implant is placed in a controlled temperature bath. Readings are taken, typically at every degree centigrade in the 35° to 40°C range. Since analog gain and zero adjustments in the demodulator can alter the output, a counter is connected to TP-3 during calibration so the reference and thermistor controlled period can be precisely measured in microseconds. This data is independent

of the analog demodulator. A test oscillator, square wave, with adjustable positive and negative periods can then be used at any later time to check the analog demodulator calibration, readjust its output, or allow the adjustment of a replacement demodulator without the need for recalibration of the transmitter which may be implanted in an animal and inaccessible. Changes in the transmitter such as supply voltage and timing capacitor affect both the reference and the thermistor but will not alter the ratio that the demodulator is designed to read out. More details on calibration, system accuracy, and the effect of various errors are given in references 2 and 5.

The calibration of the EKG is somewhat simpler than temperature since a high degree of absolute accuracy is not required. A test signal in the 0 to 1 mV range is connected to the transmitter input leads and measured on the demodulator EKG output. The transmitter amplifier will operate from 5 to 50 Hz so any frequency in this range is suitable. Alternatively a simulated EKG test signal can be used. The ratio of the transmitter input to the demodulator output is a measure of the overall system gain. Frequency response can also be checked at the same time.

Activity

The measurement of activity has always been of interest in overall physiological monitoring studies, but there are many difficulties in making this measurement. Visual observations can be made, but this requires extensive manpower, is expensive, and the subjective results are difficult to quantify. Microwave and ultrasonic fields have also been tried, but require additional expensive, complex equipment and may affect the animal physiologically.

A very simple method of determining activity by measuring the field strength of the 8 to 9 MHz transmitter signal is used. If the animal is stationary the signal strength as seen in the receiver will be constant at some level depending upon position and orientation of the antenna coils. Any change in position or orientation due to movement results in a transient change in the carrier signal level. Thus one obtains an index of activity level simply by measuring the dynamic fluctuations in the signal level. Since the magnitude of the dynamic effects is a function of the signal level, animal position, and orientation the results cannot be quantified and can only be termed an index. But since the output typically produces many hundreds of transients in a few minutes period with normal animal movement, the statistical averaging should provide a reliable index. The system is basically similar in function to the microwave or ultrasonic systems, except that the generator is located in the animal and a much lower level of field strength is required. The activity measurements in this design do not require any additional equipment since the necessary transmitter is already in place for temperature and EKG measurements.

Since the transmitter only transmits the 8 MHz carrier in 50 and 100 μsec pulses it is first necessary to obtain a steady voltage equal to the pulse amplitude. In the demodulator circuit (fig. 7), the pulse amplitude 2a from the receiver is converted to an analog voltage at TP-5. A gating switch operated by the saturated pulse 3 provides a sample and hold voltage on a 0.047 μF capacitor, and a CA 3140 voltage follower provides the high impedance input and low impedance output. A NAND gate controlled switch allows disabling the circuit either by external control

or by signal loss detected at TP-6. The analog signal from TP-5 is then connected to the activity circuit in figure 8. A 0.22 μF into a 1 MΩ AC coupling is used to eliminate the steady signal level and amplify the dynamic changes. A gain of 10 followed by a full wave rectifier (absolute value) provides a signal to a CA 3160 comparator. Each time the signal exceeds the diode plus the 0.2V bias level the CA 3160 output goes +6V from its normal -6V level. The pulse duration is a function of the 0.22 μF - 1 MΩ time constant and the magnitude of the dynamic change. Through a switch connected to +6V via a 10 MΩ resistor, a charge is accumulated on the 15 μF storage capacitor. The accumulated voltage on the capacitor is a function of the number and of the duration of the pulses that in turn are related to the animal movement pattern. This voltage level is measured with a CA 3140 voltage follower to provide a low impedance analog activity output. Since the NAND gate cutout circuit when activated will also cause a pulse, a CA 3160 operated from the gate control 17 is connected to provide compensation. An internal timer resets the 15 μF integrator (approx. every 5 min). This period is arbitrary but gives approximately 1 to 2V output every 5 min when the animal is active. Provision is also made for external reset of the integrator for synchronization with external data logging systems.

The calibration of the system is dependent upon the coupling time constant (0.22 μF and 1 MΩ), circuit gain, and integrator constant. These factors plus the nonlinear factors affecting the field strength sensitivity, dependent upon the animal's location and orientation, necessitates an empirical calibration. A degree of quantification is possible by correlating the output data to some sample visual observations.

The accuracy of each pulse is low, but with many hundreds of pulses contributing to each 5 min data point (animal active) the averaging will provide meaningful data statistically. Observations on a rat produced 5 min readings of 0.05 to 0.3V when the animal is sleeping and 1 to 2V when active (see figs. 11 and 12). It should be pointed out that even respiration during sleep could be observed by increasing the circuit gain, but then any activity would cause violent excursions on the recorder. This shows that the gain levels must be carefully adjusted and the output calibrated empirically by visual observation.

This activity monitoring technique is usable with either battery or inductive field operation of the transmitter, since the field strength variations emanate from the 8 MHz transmitter implanted within the animal. The availability of the limiting detector in the CA 3089 device simplifies the implementation of this technique. On the other hand, with most receivers field strength meters are not common and especially for pulse amplitude modulated signals. Also the operation at 8 MHz is highly predictable, whereas a higher frequency such as 88 to 108 MHz might prove unsatisfactory because of the many reflection problems encountered at the higher frequencies.

Inductive Energizer

The inductive power technique is not new,[3,6,10] but normally has been utilized with an energizer unit strapped to the back of an animal[6] rather than on a cage wall. Transmission of energy from the cage wall to an animal has been reported previously by Schuder[10]. His requirement was for as much as 50W to operate an artificial heart in a dog. The

power needs were many orders of magnitude greater and the cage size was larger. The operation principle in this case is the same but with the smaller cage and micropowered transmitters, the power supply problems are significantly reduced and the technique is more attractive. The need to connect, seal, and repot a unit with new batteries after each experiment is eliminated and longer experiments without the danger of battery failure are possible. The system has been made entirely flexible allowing the use of batteries, if desired, without other modification problems because there may be occasions where the use of inductive power is not suitable (too large a cage or the possibility of subtle physiological effects). A more detailed discussion of inductive as well as other power sources is covered in reference 3.

Figure 6 shows graphically how the energizing coil surrounds an unrestrained animal, and powers the implant via an inductive pickup coil. The pickup coil is wound so that the axis after implant is vertical when the animal is standing on all four legs. The energizing coil is positioned for a vertical flux axis to allow maximum and relatively uniform coupling in this situation. As the animal turns and moves around the cage approximately in the posture shown, the coupling would remain unchanged. When the animal stands on two feet, grooms, curls up during sleep, etc., the coil orientation will change and may reduce the input power sufficiently to stop transmitting. But since in the favorable mode, axis parallel, an excess power is available the transmitter axis can be inclined as much as 70 to 80° and still maintain adequate power.

The power source for the transmitter is shown in figure 1. The inductive pickup coil consists of approximately 100 turns wound around a 7 mm diam x 7 mm long ferrite core. This coil is resonated at 240 kHz with a 2000 pF capacitor. The ac voltage is reflected and regulated at approximately 3V by a D30A-3 transistor and a PD 6202 zener regulator diode. The transistor acts as a shunt load on the coil. A shunt type regulator can be used because the coil voltage is sensitive to loading (high impedance source). When more power is inductively coupled than needed by the transmitter, excess power is dissipated in the transistor. As the energizing flux is reduced and the voltage drops below the 3V regulation point, changes such as pulse width occur. Since this causes problems in the demodulator, a second D30A3 transistor has been incorporated in the power supply to provide a sharp cut out when the B+ is less than 2.7V. The coil, regulator, and associated parts are the replacement for a 3V battery source.

The energizing circuit for the system is shown in figure 9. The circuit is merely a 240 kHz oscillator circuit with a medium power output transistor. A crystal controlled transmitter has been used so that the tuning of the transmitter and pick up coil will be stable and predictable. Otherwise the use of crystal control is not necessary and an LC controlled oscillator could be substituted. The power output stage uses a Motorola MPS-U04 medium power transistor with a 180V $_{CEO}$, 1 A I_c, and a 10W maximum power rating. The device also has an f_t rating of 50 MHz so provides high gain and efficiency at 240 kHz. The typical DC current drain is 100 mA with a tank circuit capacitor and coil as shown. The transistor

operates in the Class C Mode, on less than 20% duty cycle so the dissipation in the transistor is low.

The animal is housed in a plastic cage with the surrounding energizing coil as seen in the photo figure 10. The cage could be rectangular or any other shape, either larger or smaller than the one illustrated, as long as a suitable resonant coil with adequate flux density is generated. The following is a calculation of the flux density for the example shown.

$$\text{freq} = 240 \text{ kHz}$$

and

$$\omega = 1.507 \times 10^6$$

$$C = 0.05 \text{ uF}$$

$$\frac{1}{\omega C} = \frac{1}{1.507 \times 0.05} = 13.3\Omega$$

If the transistor is adjusted to provide maximum drive, the peak-to-peak voltage swing across the coil and capacitor will be nearly twice the power supply minus a few volts. The peak current in the coil is 2.5 A for a ±34V swing. This current is much larger than the 100 mA average DC supply current because of the resonant circuit with low power loss. The 2.5 A current in a 3 turn 25 cm diam coil translates into the following flux density.

$$H_{\text{gilberts/cm}} = \frac{0.2\ NI_{\text{amp}}}{r_{\text{cm}}} \quad \text{potential gradient}$$

The flux density in gauss is numerically equal to the free space magnetic potential gradient in gilberts/cm so

$$B_{gauss} = \frac{0.2\ NI_{amp}}{r_{cm}}.$$

At the coil center,

$$B = \frac{(0.2)(3)(2.5)}{(12.5)} = 0.12 \text{ gauss or } 1.2 \times 10^{-5} \text{ webers/m}^2 \sin \omega t.$$

Near the edge of the coil, 2.5 cm in, the density would be as follows.

$$B = \frac{(0.2)(3)(2.5)}{2.5} = 0.6 \text{ gauss or } 6 \times 10^{-5} \text{ webers/m}^2 \sin \omega t.$$

Here H equals magnetic field intensity — gilberts/cm, B equals magnetic flux density — gauss or webers/m^2, N equals number of turns in coil, I equals circulating current amps, and r equals coil radius cm.

Since the earth's magnetic field is approximately 3×10^{-5} webers/m^2, the above levels of flux density are not expected to cause any unusual physiological effects and none were evident in preliminary tests. Specific experimental protocol may require more detailed tests in the future. Since the transmitter is designed for either inductive or battery operation any doubt about magnetic field effects on an experiment can be readily determined by battery operation with and without an energizing field.

The size and shape of the energizing coil can be changed as long as the tank is retuned and adequate flux is obtained for transmitter operation. Also the power supply to the output stage can be increased beyond 36V for greater flux density if desired. It is essential that metal cages, cage floors, shields, etc., be removed from the vicinity since they can reduce the Q of the tank circuit. Any conductive metal that forms a short circuit in the vicinity is especially detrimental. To verify that problem materials are not in the vicinity the ac voltage level across the coil should be measured to see that its peak to peak value is approximately twice the power supply voltage. Small power losses can be made up by increasing the drive to the transistor. It is especially important that if a shield is to be used that it be spaced at least one radius away from the coil so as not to reduce the Q.

Although this design describes a combination temperature - EKG transmitter, units with temperature alone have been built and utilized more extensively to date. Except for the EKG amplifier and modulation all the transmitter, demodulator, receiver, and energizer circuitry is identical. One additional problem observed with the EKG unit is the flux changes in the EKG lead wires with rapid animal motion which translates into a base line shift. Of course if the motion is slow the voltage change is below the frequency response needed for EKG measurements. A 47K input resistor and 220 pF bypass capacitor were incorporated in the EKG amplifier input to minimize this effect. Also it is desirable to place the EKG leads close together in order to intercept as little flux as possible.

RESULTS

The system that has been described has been used to monitor rats which are housed in a cage as seen in figure 10. A plexiglass cage is used because metabolic measurements were made by sampling the inspired-expired gases, in addition to temperature, activity, and heart rate. This of course required a sealed chamber, but any kind of cage that is not metallic can be used. Figure 11 is a 2-hr recording showing a typical example of spontaneous activity by the animal and concurrent changes in temperature and heart rate. The heart rate is derived from the EKG signal and it can be noted that during the sustained activity there are frequent loss of heart rate data (recording saturated negatively). Some of this may be due to a loss in energizing the transmitter inductively or nulling of the data signal, but more likely it is a failure of the heart rate meter to accommodate to various EKG signal changes. The cause of bad data may be varied, but as yet has not been specifically identified. The difficulties occur primarily during activity and failure of the heart rate meter is most likely. This was a quickly assembled detector circuit that can be refined in the future. The bad data all goes negative and is quite easily discernible so that an envelope of the positive readings will give a good approximation of the data. During the sample interval the heart rate ranged from approximately 300 to 400 bpm.

The field strength has been included in the record to show its characteristics and how the activity data is derived. With the sustained activity (heart rate increasing to 400 bpm) the field strength is very

unstable. In the second half of the record with heart rate down and temperature decreasing, we see that the field strength will stay at different levels for periods of many minutes. By taking the dynamic fluctuation of the field strength as described in the section on activity and connecting them to a comparator, the number of zero crossing can be obtained. These pulses are then connected to an integrator that is reset approximately every 5 min for accumulation. The activity recording then shows this accumulation. The large degree of activity in the first hour and the greatly reduced activity in the second hour can be easily discerned. A longer 16-hr data sample is shown in figure 12. The field strength record is not shown here. Again certain periods in the heart rate must be extrapolated due to the lack of refinement in the heart rate meter.

SUMMARY

The system that has been described is an update of the miniature temperature and EKG transmitters designed over ten years ago. Low power CMOS ICs have been incorporated not only for their size advantage but because they significantly reduce fabrication cost. A unique feature of the system is the use of inductively coupled power to the transmitter that removes the limitations inherent with batteries. The functions of EKG and temperature are transmitted via a single RF link from the implant device.

The system is designed to use a very simple receiver in the 9 to 13 MHz region. The receiver consists essentially of one preamp transistor and an integrated circuit IF amplifier operating by direct

amplification without superhetrodyning. The simplicity of the receiver makes it possible to mount two of them on one PC board and provide diversity receiving to overcome antenna nulls. The IC receiver chip also provides a signal strength output that has made possible the measurement of activity without additional transmitter complications.

References

1. Deboo, G. J. and Fryer, T. B.: A miniature biopotential telemetry system. Am. J. Med Electron 4:138-142 (1965).
2. Fryer, T. B.: Implantable Biotelemetry Systems, NASA Office of Tech. Util. Publication SP5094, U. S. Gov't. Print. Office, Wash., D.C. Library of Congress, No. 75-606340 (1970).
3. Fryer, T. B.: Power sources for implant telemetry systems. Biotelemetry 1:31-40 (1974).
4. Fryer, T. B.: The use of hybrid integrated circuit techniques in biotelemetry applications. Biotelemetry (in press 1978).
5. Fryer, T. B.; Deboo, G. J., and Winget, C. M.: Miniature long life temperature telemetry system, J. Appl. Physiol. 21:295-298 (1966).
6. Fryer, T. B. and Sandler, H.: A Rechargeable Battery System for Implanted Telemetry Systems, Proc. 23rd Annual Conf. Engng. Med. Biol., Wash., D. C. 1970, p. 129.
7. Harris, C. L. and Siegel, P. B.: An implantable telemetry for determining body temperature and heart rate, J. appl. Physiol. 22:846-849 (1967).
8. Hudson, P. H. and Meindl, J. P.: A monolithic micropower command receiver. IEEE J. of Solid State Circuits SC-7: 125-135 (1972).

9. Mackay, R. Stuart: Bio Medical Telemetry (John Wiley and Sons 1970).

10. Schuder, J. C. and Stephenson, H. E., Jr.: Energy transport into the closed chest from a set of very large, mutually orthogonal coils. Commun. Electronics 64:527-534 (1963).

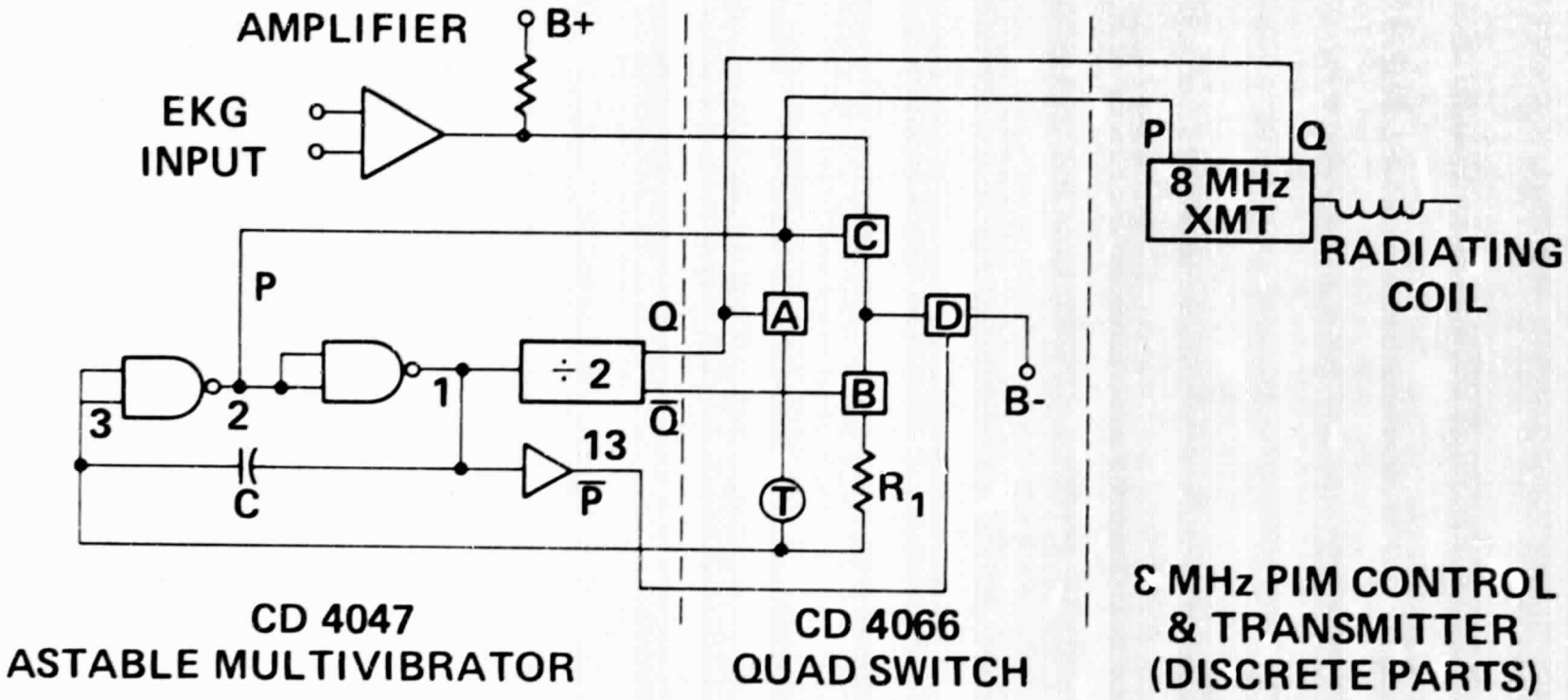

(a) Circuit diagram.

Fig. 1. Implant transmitter

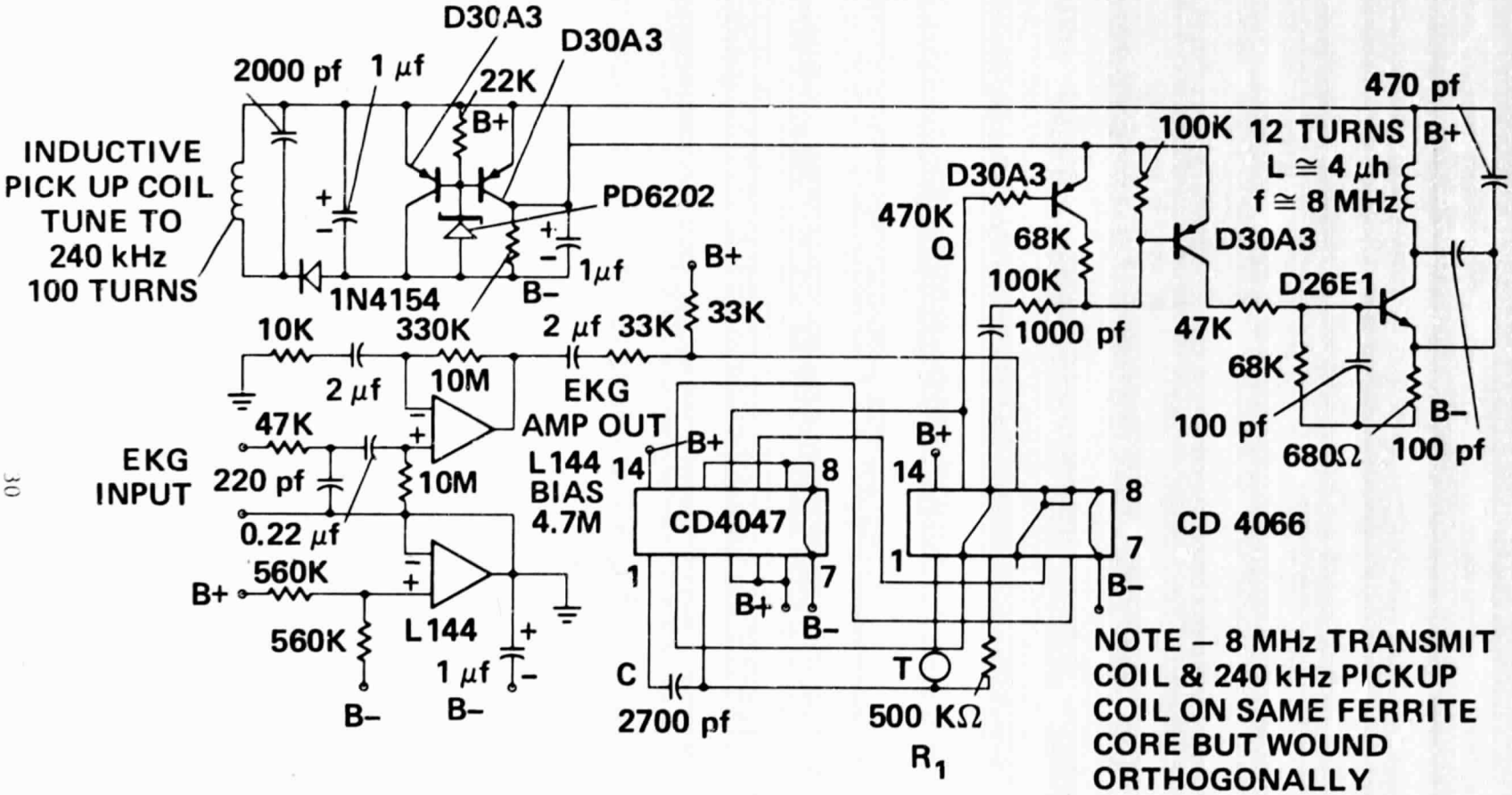

(b) Block diagram showing the major functional elements of the transmitter.

Fig. 1. Concluded.

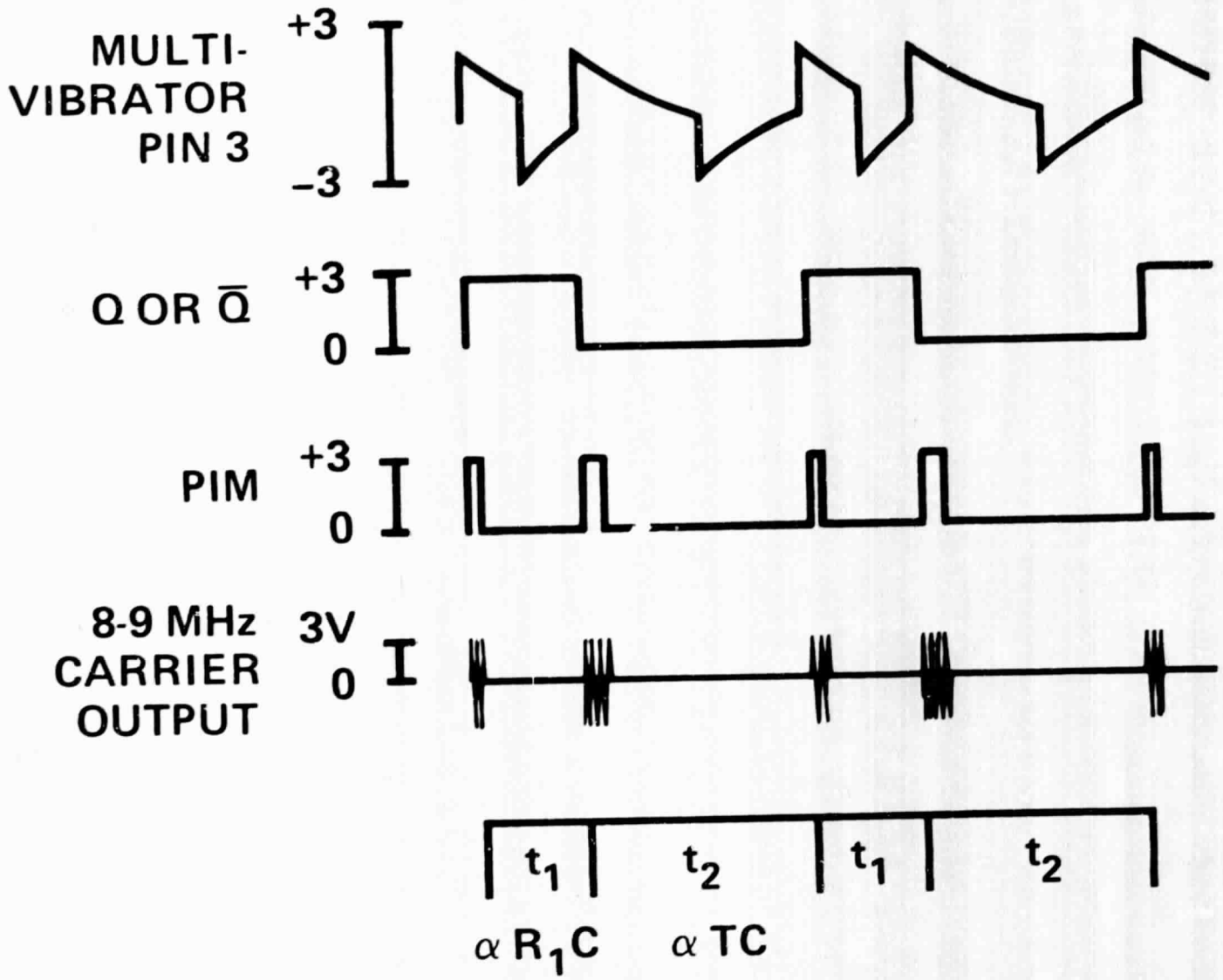

Fig. 2. Typical waveforms at various locations in the transmitter.

Fig. 3. Sample EKG recording. Upper frequency limit 45 Hz 3 db and lower cut off 5 Hz 3 db.

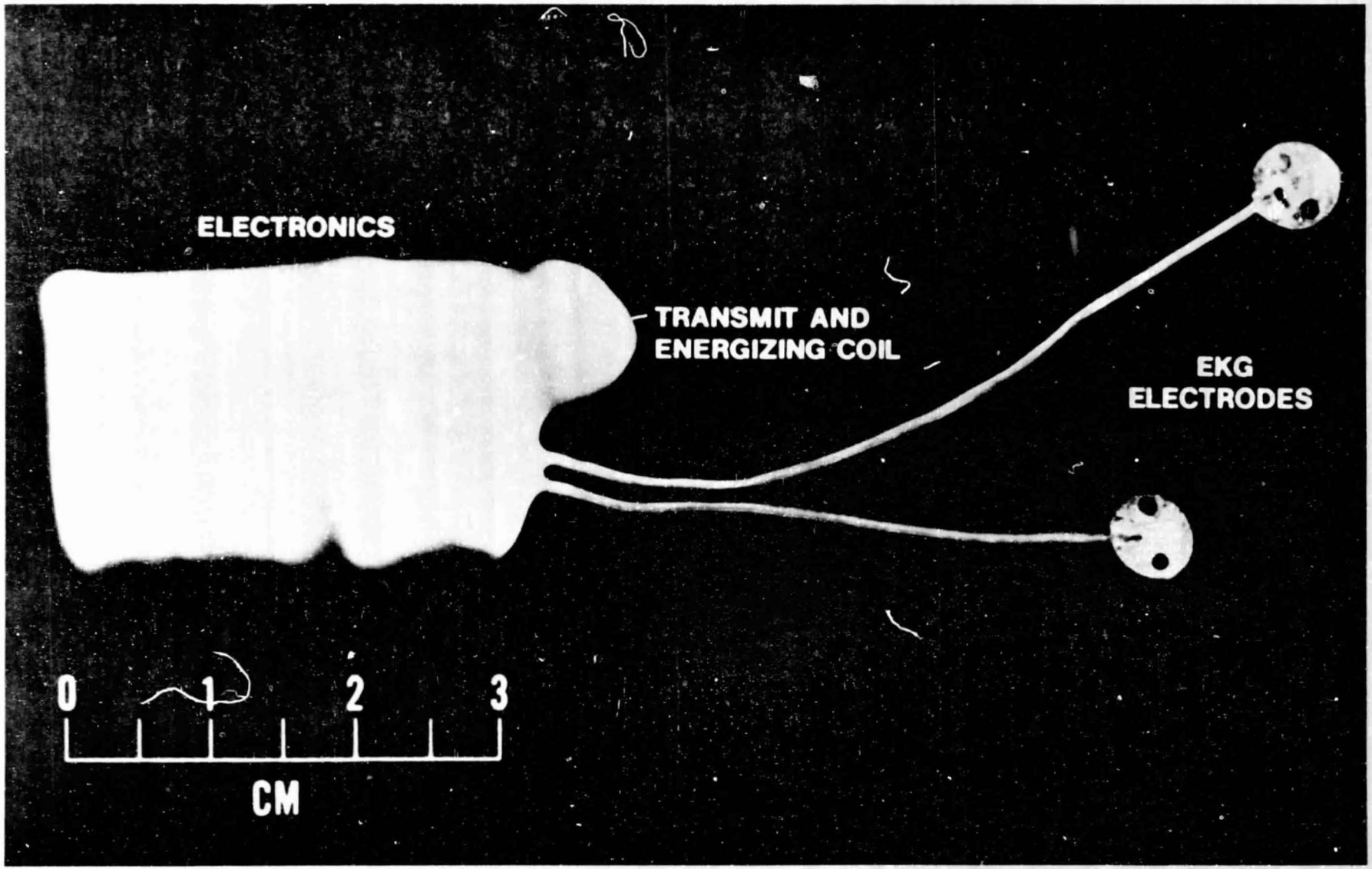

Transmitter sealed and potted ready for implant. This prototype unit has been fabricated with discrete components. The use of hybrid fabrication could reduce the physical size.

REPRODUCIBILITY OF THE
ORIGINAL PAGE IS POOR

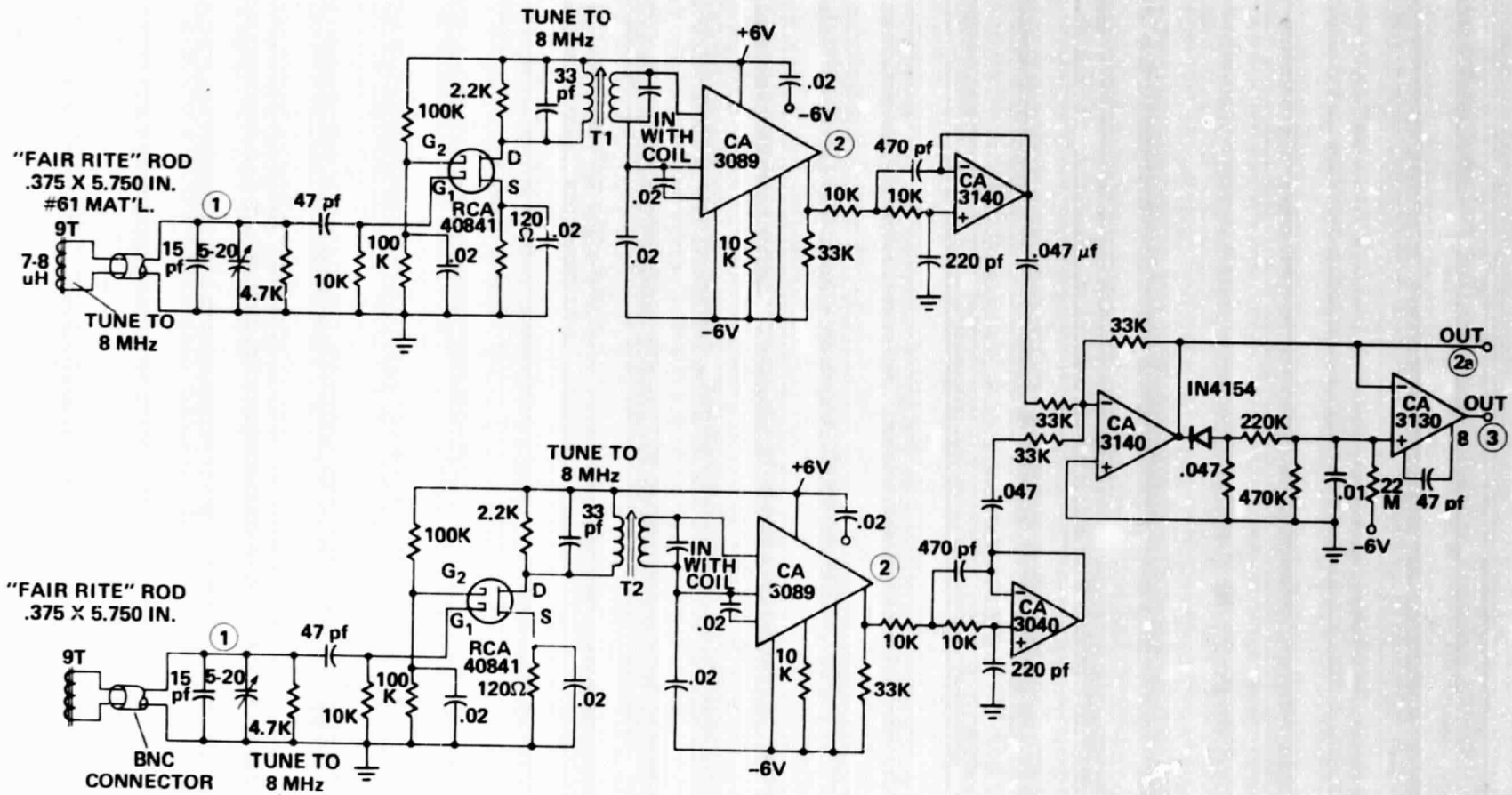

Fig. 5. Receiver circuit. The simplicity of the IC receiver facilitates the use of two identical channels to provide diversity reception and eliminate antenna null positions.

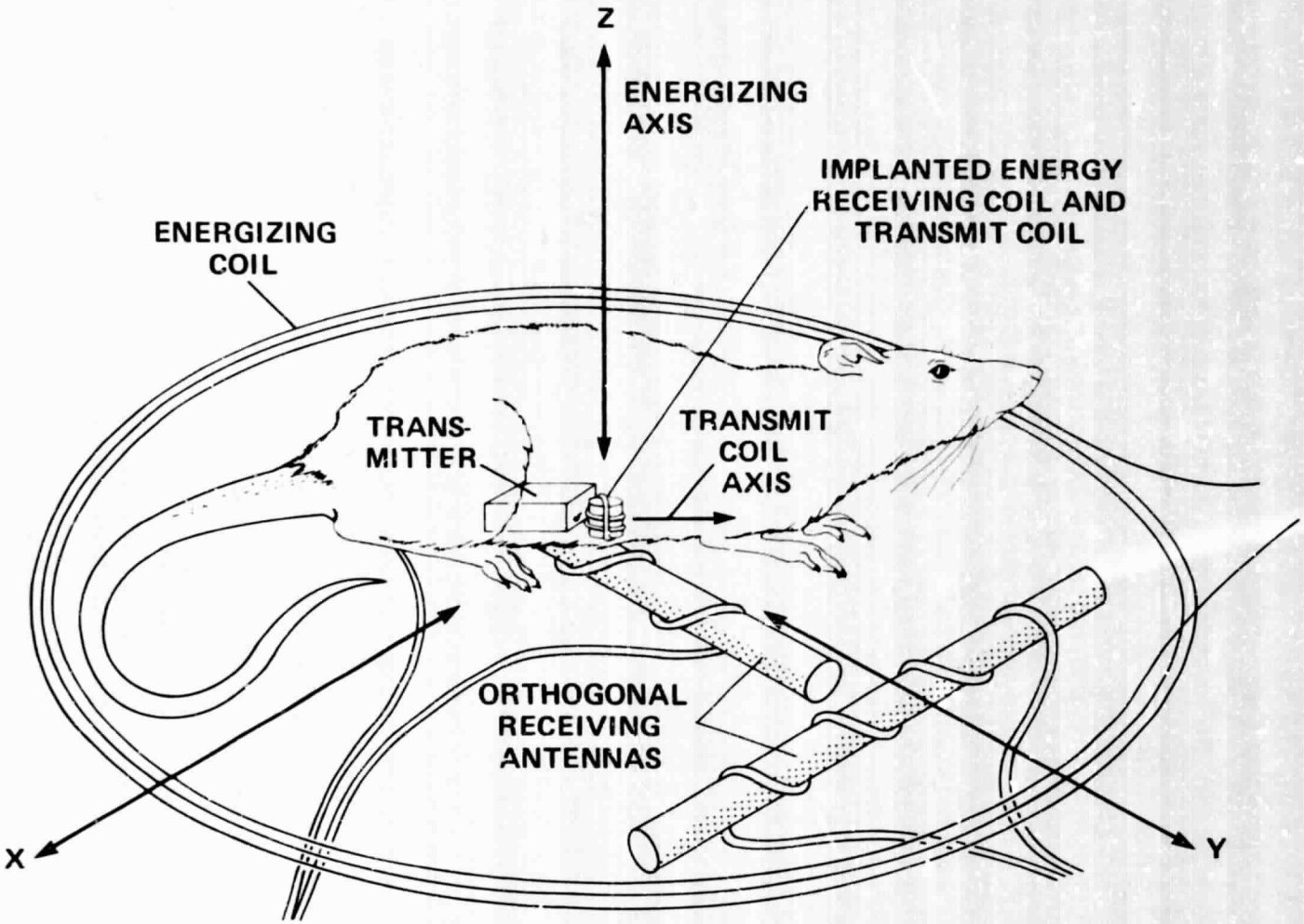

Fig. 6. A pictoral showing the relative position of the animal and implanted transmitter relative to the energizing coil and signal pickup antennas.

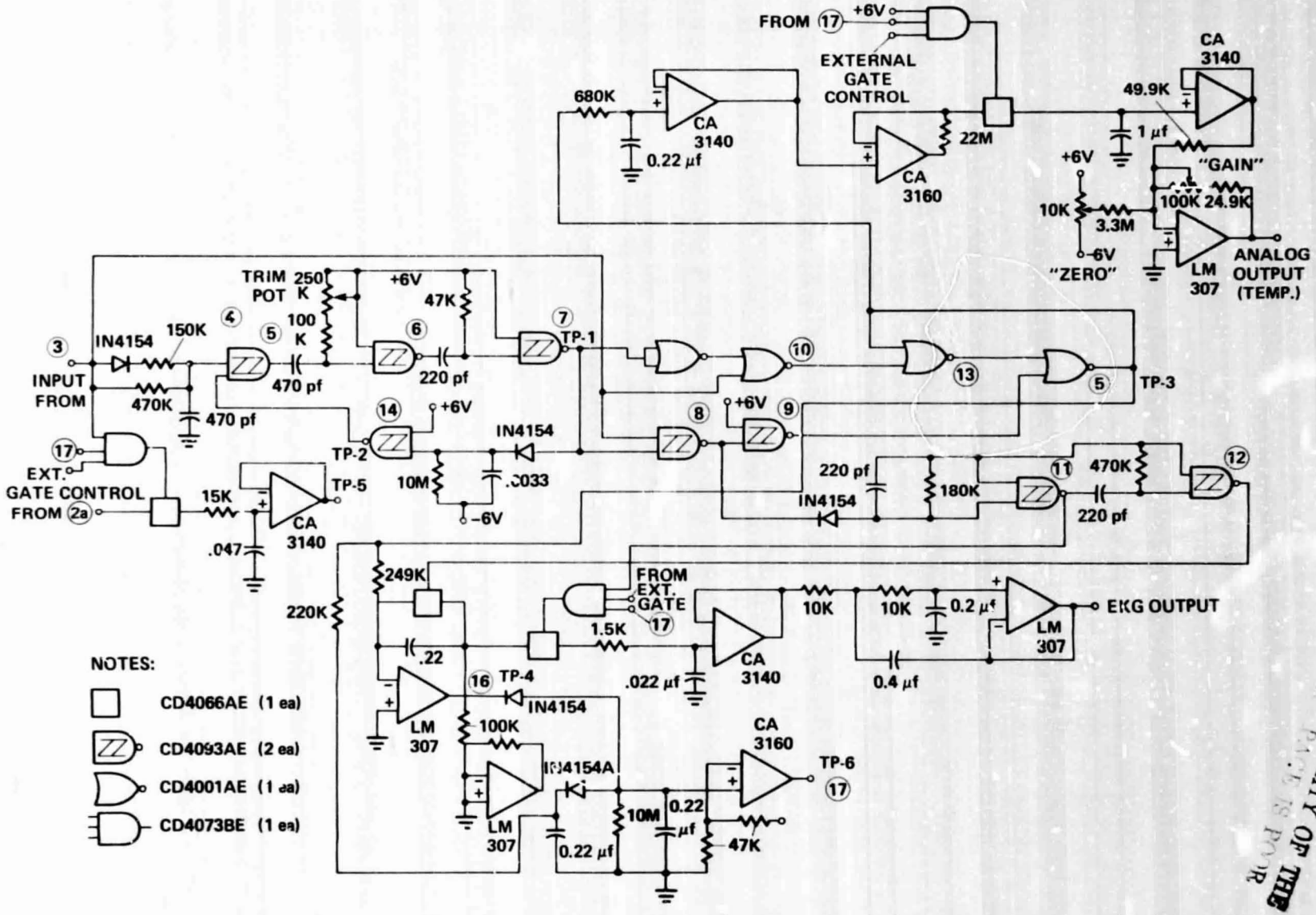

Fig. 7. Demodulator circuit for the conversion of the coded data (PIM) to an analog temperature and EKG output.

REPRODUCIBILITY OF THE ORIGINAL PAGE IS POOR

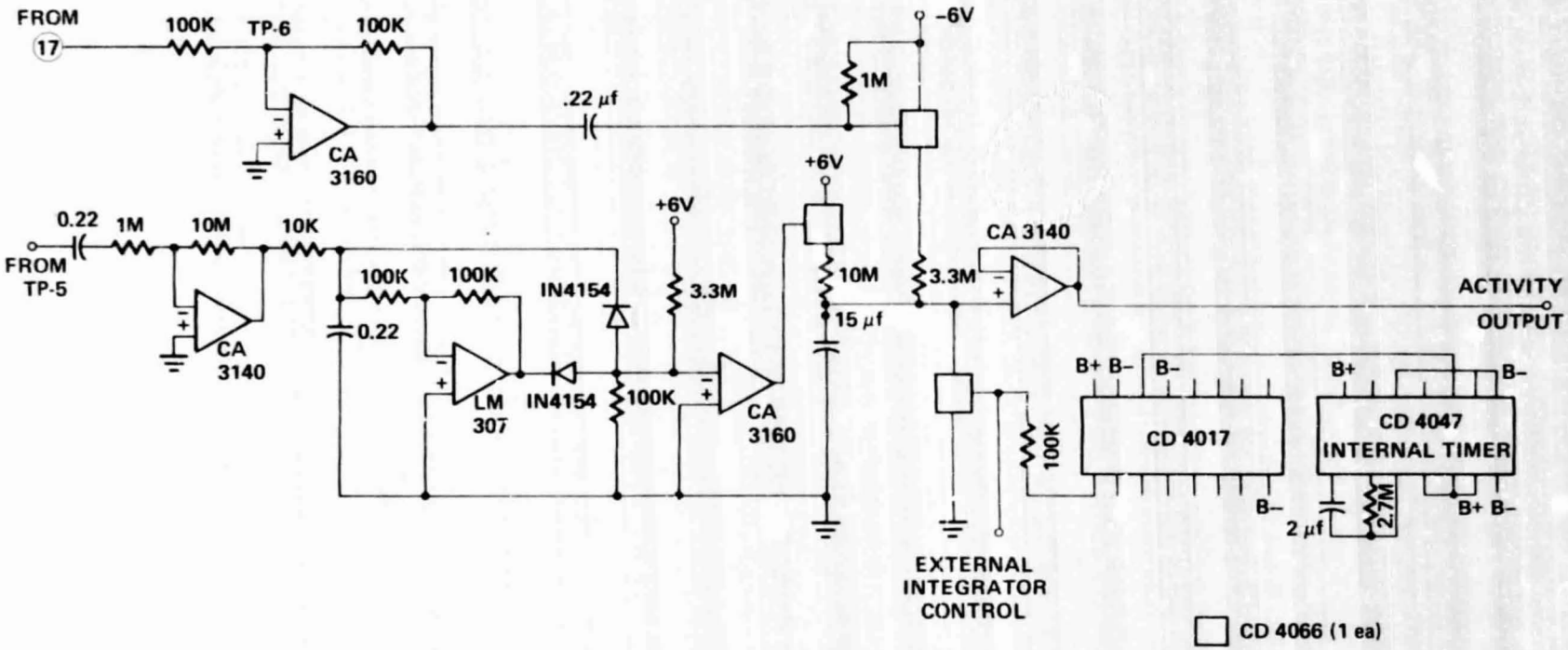

Fig. 8. Circuit for obtaining an index of animal activity.

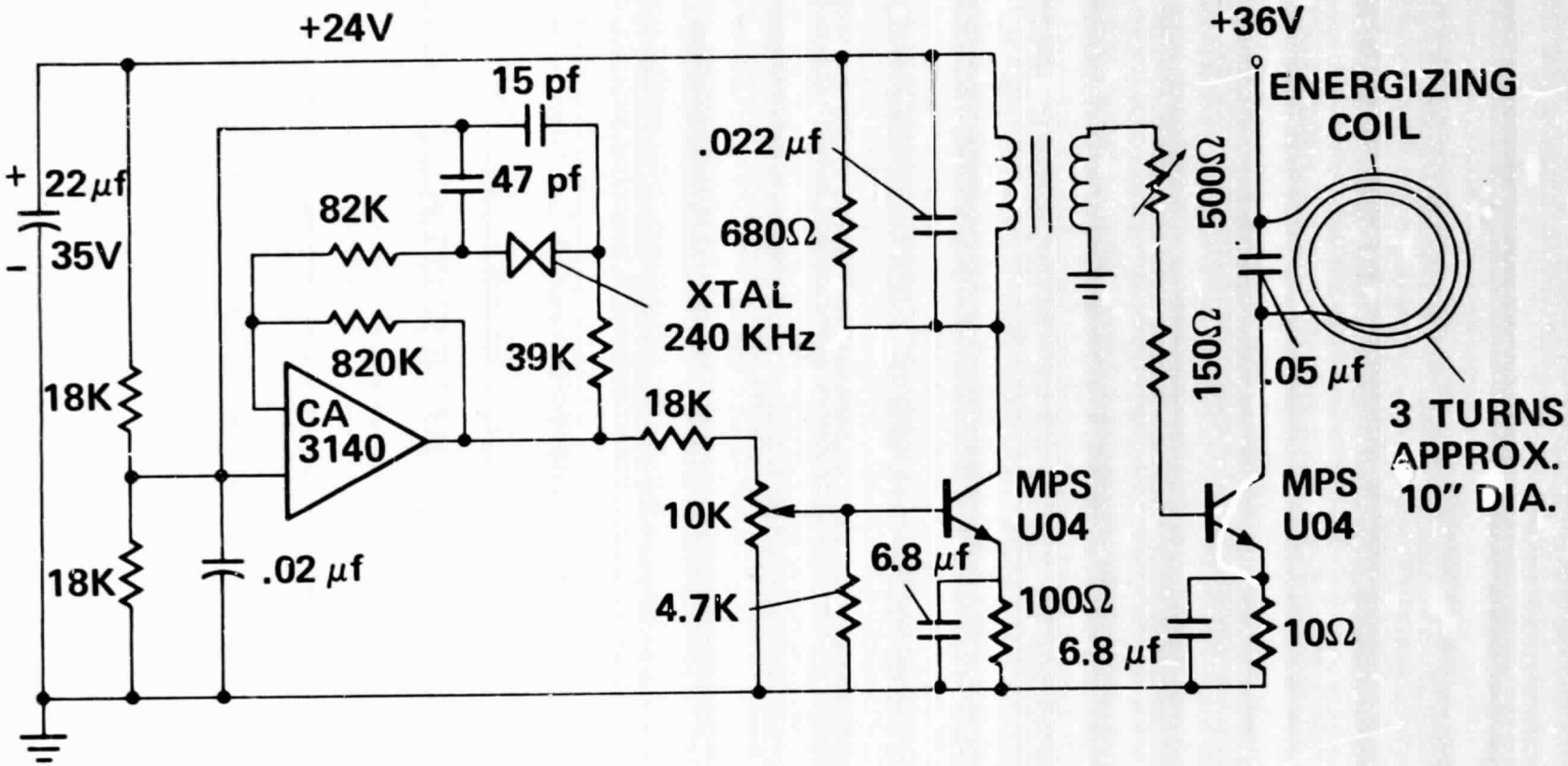

Fig. 9. Circuit for supplying 240 kHz power to the energizer coil that in turn inductively powers the implant device in the animal.

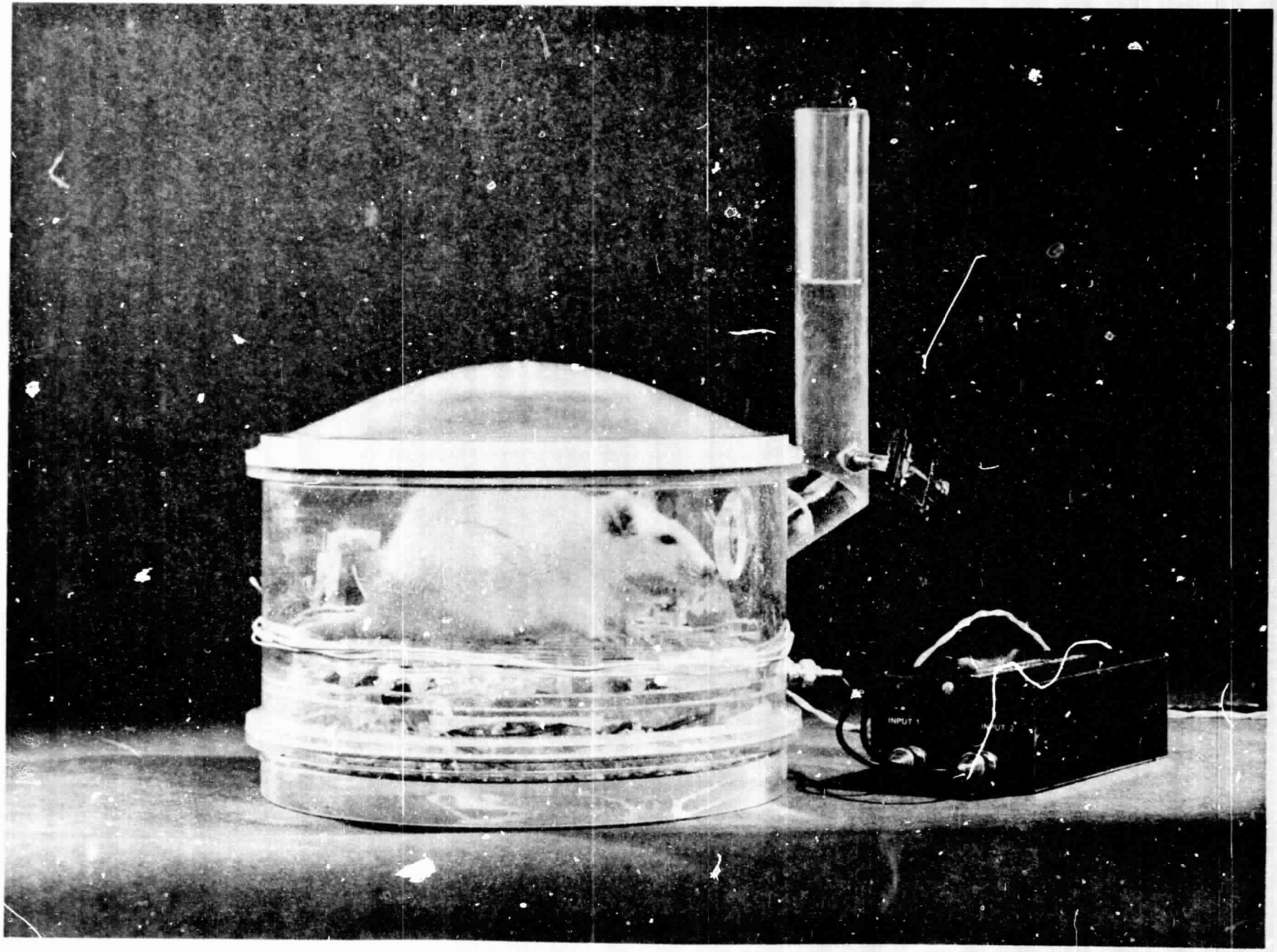

Fig. 10. Photography of a rat in a 25 cm diam sealed plexiglass cage that provides metabolic measurements via gas analysis in addition to the telemetered temperature, EKG, and activity. The energizing coil surrounding the cage is visible. The 5 x 9 x 15 cm box on the right contains the dual channel 8 MHz receiver, demodulator and activity circuitry used in figures 4, 6, and 7.

REPRODUCIBILITY OF THE ORIGINAL PAGE IS POOR

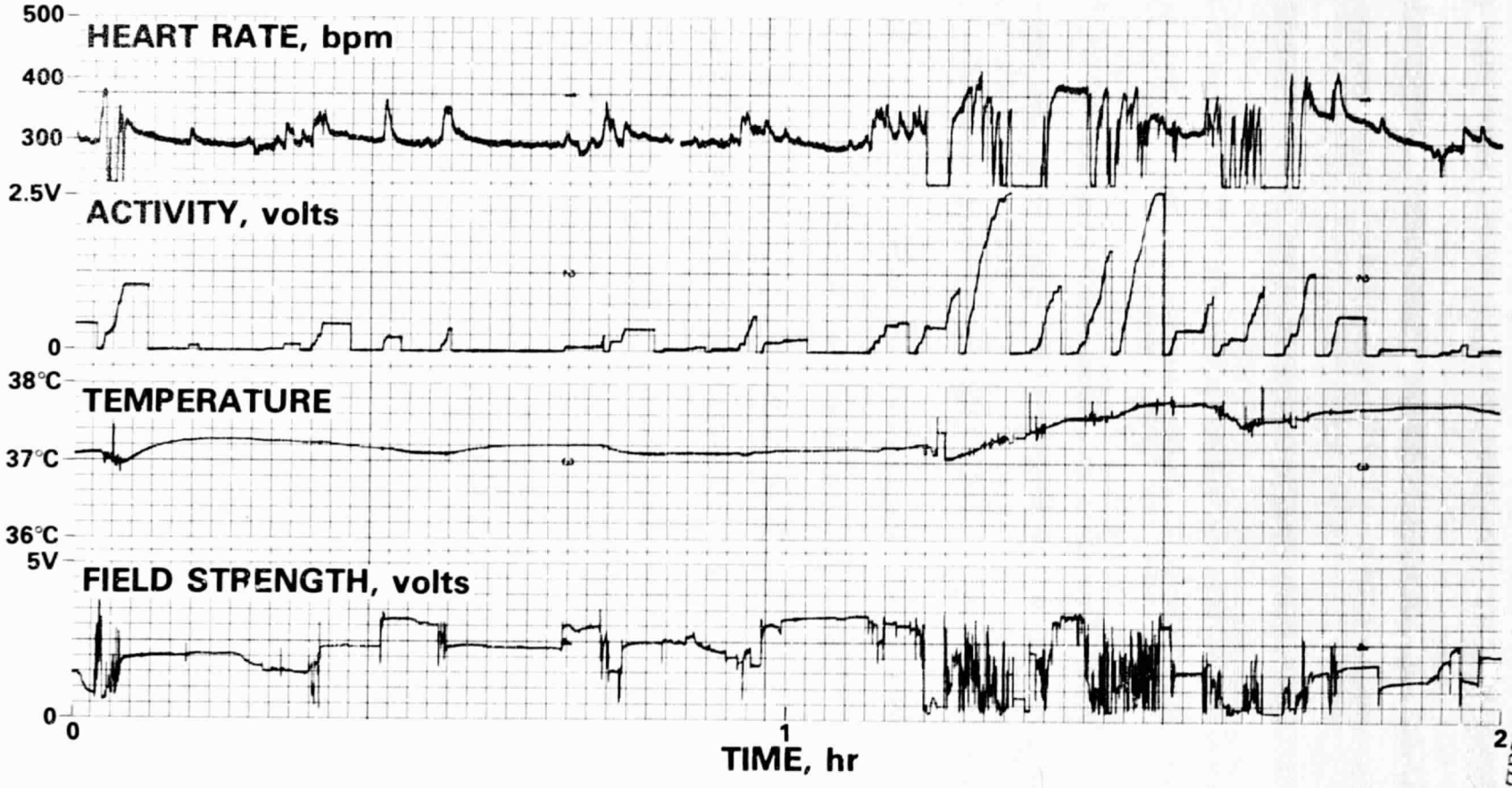

Fig. 11. A sample 2-hr recording of temperature heart rate, activity, and field strength. Integrated activity index with reset approximately every 4 min is derived from the dynamic changes in field strength. Heart rate obtained from EKG and saturated negative swings, mostly during activity, are due to a failure of the rate monitor.

REPRODUCIBILITY OF THE ORIGINAL PAGE IS POOR

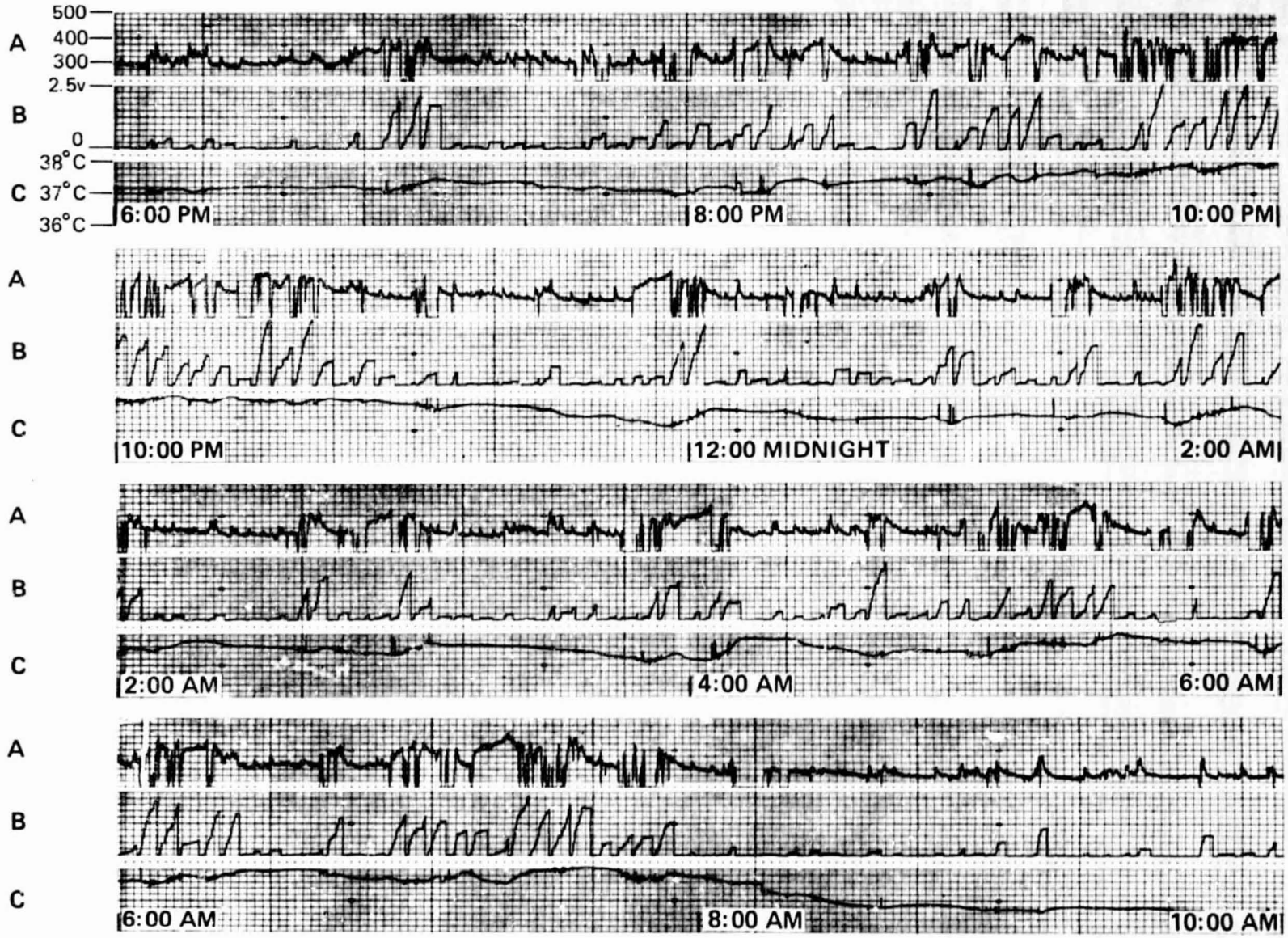

Fig. 12. A 16-hr recording from a rat. A - heart rate; B - activity index; C - temperature. Negative saturated heart-rate signals primarily during activity are due to rate meter malfunction.

REPRODUCIBILITY OF THE ORIGINAL PAGE IS POOR

1. Report No.	2. Government Accession No.	3. Recipient's Catalog No.
NASA TM-78486		

4. Title and Subtitle	5. Report Date
AN INDUCTIVELY POWERED TELEMETRY SYSTEM FOR TEMPERATURE, EKG, AND ACTIVITY MONITORING	6. Performing Organization Code
7. Author(s)	8. Performing Organization Report No.
Thomas B. Fryer, Gordon F. Lund,* and Bill A. Williams	A-7423
9. Performing Organization Name and Address	10. Work Unit No.
NASA Ames Research Center Moffett Field, Calif. 94035	199-21-02-07-00
	11. Contract or Grant No.
12. Sponsoring Agency Name and Address	13. Type of Report and Period Covered
National Aeronautics and Space Administration Washington, D. C. 20546	Technical Memorandum
	14. Sponsoring Agency Code

15. Supplementary Notes

*Work supported by the National Research Council Research Associate program and by subsequent grant from NASA (#NSG 2293) through San Jose State University.

16. Abstract

An implant telemetry system for the simultaneous monitoring of temperature, activity, and EKG from small animals, such as rats, has recently been designed with the novel feature that instead of a battery the system is energized by an inductive field. A 250 kHz resonant coil surrounds the cage (30 x 30 x 20 cm) and provides the approximately 100 μW of power required to operate the implant transmitter while allowing the animal unrestrained movement in the cage. The implant can also be battery operated if desired. RF transmission is in the 8-10 MHz band, which allows the use of a simple, essentially single IC chip, receiver.

17. Key Words (Suggested by Author(s))		18. Distribution Statement
Biotelemetry	EEG	Unlimited
Implant	Activity	
Temperature		
Inductive power		STAR Category - 51

19. Security Classif. (of this report)	20. Security Classif. (of this page)	21. No. of Pages	22. Price*
Unclassified	Unclassified	43	$4.00

*For sale by the National Technical Information Service, Springfield, Virginia 22161