DOE/JPL 954334-77/4
Distribution Category UC-63

LOW COST SILICON SOLAR ARRAY PROJECT

FEASIBILITY OF A PROCESS FOR LOW-COST, HIGH-VOLUME PRODUCTION OF SILANE AND PYROLYSIS OF SILANE TO SEMICONDUCTOR-GRADE SILICON

QUARTERLY PROGRESS REPORT

Period Covered: July-September, 1977

(NASA-CR-157100) LOW COST SILICON SOLAR ARRAY PROJECT SILICON MATERIALS TASK: ESTABLISHMENT OF THE FEASIBILITY OF A PROCESS CAPABLE OF LOW-COST, HIGH VOLUME PRODUCTION OF SILANE (STEP 1) AND (Union N78-24623 G3/44 Unclas 20674

UNION CARBIDE CORPORATION

This work was performed for the Jet Propulsion Laboratory, California Institute of Technology, under NASA Contract NAS 7-100 for the U.S. Department of Energy, Division of Solar Technology.

The JPL Low-Cost Silicon Solar Array Project is funded by DOE and forms part of the DOE Photovoltaic Conversion Program to initiate a major effort toward the development of low-cost solar arrays.

NOTICE

THIS REPORT CONTAINS INFORMATION PREPARED BY UNION CARBIDE CORPORATION UNDER A JPL SUBCONTRACT. ITS CONTENT IS NOT NECESSARILY ENDORSED BY THE JET PROPULSION LABORATORY, CALIFORNIA INSTITUTE OF TECHNOLOGY, THE NATIONAL AERONAUTICS AND SPACE ADMINISTRATION, OR THE DEPARTMENT OF ENERGY.

LOW COST
SILICON SOLAR ARRAY PROJECT
SILICON MATERIALS TASK

ESTABLISHMENT OF THE FEASIBILITY OF A PROCESS
CAPABLE OF LOW-COST, HIGH-VOLUME PRODUCTION OF SILANE (Step I)
AND THE PYROLYSIS OF SILANE TO SEMICONDUCTOR-GRADE SILICON (Step II)

JPL Contract 954334

QUARTERLY PROGRESS REPORT

Period Covered: July-September, 1977

W. C. Breneman
E. G. Farrier
J. Rexer

UNION CARBIDE CORPORATION

TABLE OF CONTENTS

ABSTRACT 1

1.0 SILANE PRODUCTION 2

1.1 INTRODUCTION 2
1.2 DISCUSSION 3

1.2.1 SILANE DEVELOPMENT UNIT 3
1.2.2 HYDROGENATION PROCESS STUDIES 5
1.2.2a HIGH-PRESSURE REACTION SYSTEM 5
1.2.2b FLUIDIZATION IN GLASS REACTOR 8
1.2.2c FLUIDIZATION IN STEEL REACTOR 9
1.2.2d SAMPLING SYSTEM 10
1.2.2e THEORETICAL ASPECTS 11
1.2.2f RAW-MATERIAL CHARACTERIZATION 12
1.2.3 INTEGRATED PROCESS SYSTEM 13
1.2.4 LABORATORY STUDIES – HYDROGENATION 15

1.3 CONCLUSIONS 18
1.4 PROJECTED QUARTERLY ACTIVITIES 18

1.4.1 LABORATORY STUDIES 18
1.4.2 PROCESS DEVELOPMENT OPERATIONS 18

2.0 SILICON PRODUCTION 19

2.1 INTRODUCTION 19
2.2 DISCUSSION 19

2.2.1 SILANE PYROLYSIS 19
2.2.1a FLUID-BED REACTOR 19
2.2.1b FREE-SPACE REACTOR 22
2.2.2 SILICON CONSOLIDATION 26
2.2.3 PRODUCT PURITY 28

2.3 CONCLUSIONS 31
2.4 PROJECTED QUARTERLY ACTIVITIES 32

2.4.1 FLUID-BED REACTOR 32
2.4.2 FREE-SPACE REACTOR 32
2.4.3 SILICON CONSOLIDATION 32

LIST OF TABLES

1.1 MAJOR ITEMS OF EQUIPMENT: HYDROGENATION UNIT 5

1.2 HYDROGENATION REACTOR – INITIAL RESULTS 17

LIST OF FIGURES

1.1 FLOW SHEET FOR PROCESS DEVELOPMENT HYDROGENATION UNIT .. 6

1.2 3-INCH GLASS FLUIDIZATION APPARATUS FOR SILICON 8

1.2A HYDROGENATION SAMPLING SYSTEM 10

1.3 SILICON FLUIDIZATION: PRESSURE DROP vs. BED HEIGHT 9

1.4 FLOW SHEET FOR INTEGRATED REDISTRIBUTION UNIT 14

1.5 LABORATORY REACTOR FOR HYDROGENATION OF $SiCl_4$ UNDER PRESSURE 15

2.1 GLASS FLUID-BED REACTOR AND CONTROL PANEL 20

2.2 GAS FLOW SCHEMATIC FOR FLUID-BED REACTOR 21

2.3 SEM OF LOOSE POWDER FROM FREE-SPACE REACTOR 23

2.4 SEM OF SEMI-SOLID WALL DEPOSITS IN FREE-SPACE REACTOR, 15,000X 24

2.5 SEM OF SEMI-SOLID WALL DEPOSITS IN FREE-SPACE REACTOR, 5,000X 25

2.6 SCHEMATIC OF POWDER STORAGE, TRANSFER AND MELTING APPARATUS 27

ABSTRACT

SILANE PRODUCTION

Silane produced via the redistribution of dichlorosilane and purified by distillation followed by adsorption of residual chlorosilane on activated carbon yields 50 ohm-cm silicon on epitaxial deposition. Extended operation of a small process-development unit routinely produced high-quality silane in 97+% yield from dichlorosilane. The production rate was consistent with design loadings for the fractionating column and for the redistribution reactor.

Laboratory and process-development reactor systems were built to study the hydrogenation of co-product silicon tetrachloride. An integrated unit for converting hydrogen and silicon to silane is also under construction.

SILICON PRODUCTION

A glass fluid-bed reactor was constructed for room-temperature operation. The behavior of a bed of silicon particles was observed as a function of various feedstocks, component configurations, and operating conditions. For operating modes other than spouting, the bed behaved in an erratic and unstable manner. A second reactor with a modified gas-feed system for increased bed stability is being constructed.

In some free-space reactor experiments, friable clusters of silicon particles formed on the tip of the gas injector and on the reactor wall. The temperature at the growth sites was the major parameter controlling the extent of these formations. It was also shown that, within limits, the particle size of the reactor product can be modified by controlling the temperatures of the reactor and of the injected silane.

A method was developed for casting molten silicon powder into crack-free solid pellets for process evaluation. The silicon powder was melted and cast into thin-walled quartz tubes that sacrificially broke on cooling. The samples are intended for resistance and spark-source mass spectroscopic analysis.

Free-space reactor modifications are in progress for minimizing free-space reactor powder contamination through handling and airborne sources. The analysis of powder showed that nickel and graphite reactor liners were impurity sources. A quartz reactor liner was installed, and the powder produced is being analyzed.

1.0 SILANE PRODUCTION

1.1 INTRODUCTION

The purpose of this program is to determine the feasibility and practicality of high-volume, low-cost production of silane (SiH_4) as an intermediate for obtaining solar-grade silicon metal. The process is based on the synthesis of SiH_4 by the catalytic redistribution of chlorosilanes resulting from the reaction of hydrogen, metallurgical silicon, and silicon tetrachloride. The goal is to demonstrate the feasibility of a silane production cost of under $4.00/kg at a production rate of 1000 MT/year.

Prior to the inception of this program in October, 1975, Union Carbide had shown that pure hydrochlorosilanes could be redistributed to an equilibrium mixture of other hydrochlorosilanes by contact with a tertiary-amine, ion-exchange resin. In addition, Union Carbide had shown that silicon tetrachloride, a by-product of silane redistribution, can be converted to trichlorosilane with metallurgical silicon metal and hydrogen.

Thus, a closed-cycle purification scheme was proposed to convert metallurgical-grade silicon into high-purity, solar-grade silicon using hydrochlorosilanes as intermediates. This process appears as:

1. Hydrogenation of metallurgical silicon metal and of by-product silicon tetrachloride to form trichlorosilane.

$$2\,H_2 + 3\,SiCl_4 + Si\ (M\text{-}G) \xrightarrow[Cu]{550^\circ} 4\,HSiCl_3$$

2. Redistribution of trichlorosilane to silane and silicon tetrachloride.

$$4\,HSiCl_3 \longrightarrow 3\,SiCl_4 + SiH_4$$

3. Pyrolysis of silane to high-purity silicon.

$$SiH_4 \xrightarrow{Heat} Si + 2H_2$$

Until now, laboratory investigations have defined the rate, equilibrium conversion, and certain mechanistic aspects of the redistribution and hydrogenation reactions at atmospheric pressure. A small process-development unit, capable of operating under pressure, was constructed and operated to demonstrate the conversion of dichlorosilane to silane. The unit has confirmed laboratory findings and has routinely produced high-quality silane in good yield.

The preliminary design and construction of a high-pressure hydrogenation unit and of a integrated silane and hydrogenation unit was also initiated during this last quarter.

1.2 DISCUSSION

1.2.1 Silane Development Unit

The small development unit for demonstrating the practical production of silane from dichlorosilane (DCS) was operated extensively to verify the stability of the process, to produce a significant amount of high-purity silane for chemical evaluation, and to further confirm the design data base. On-stream, steady-state operation of the unit was conducted for 3-4 consecutive days at a time, 4-6 hours per day, followed by a weekend shut-down during which carbon traps used to remove traces of chlorosilanes were thermally regenerated. The operating conditions were the same as those reported earlier, although feed and production rates were increased to give .116 kg/hr of silane (vs. .08) at a chemical efficiency of 97.3% based on DCS feed. To date, more than 1000 grams of chlorosilane per gram of ion-exchange resin catalyst have been passed through the reactor. At a nominal 8.9 sec. vapor residence time, and 55°C, an equilibrium mixture of chlorosilanes was produced. The total on-stream time to date exceeds 135 hours.

It was determined that the limiting factor in the development unit is the 2.54cm-diameter distillation column. Nominally rated at 1.64 kg/hr/cm^2 of vapor flow for ¼" protruded metal packing, the actual vapor rate limit was 1.722 kg/hr/cm^2 at 2:1 reflux ratio and 1.1364 kg/hr DCS feed rate to the system. This close approach to the theoretical limits indicates that fluid properties are well behaved and that there is no foaming or fouling after many hours of operation.

The pressure drop of vapor flowing through the packed-bed reactor averaged .02 kPa/cm at a superficial gas velocity of 5.57 cm/second. This is in good agreement with empirical correlations for packed beds of spherical particles.

Operating parameters of the carbon bed used for the final purification of silane was described in the last quarterly report. Operation during this period qualitatively verified those laboratory findings. Regeneration efficiency could not be confirmed because of inadequate means for complete regeneration; this aspect will be resolved when new, larger beds are brought on stream as part of the integrated facility.

A portion of silane product from the extended run was analyzed by several techniques to determine product quality. A chromatographic analysis by Union Carbide's Linde Specialty Gas group (a commercial manufacturer of electronic-grade silane) indicated small amounts of hydrogen (1.52%) and nitrogen (1.10%) but no other volatile impurities. The Sistersville chromatographic analysis indicated a small amount of chlorosilanes (600 ppm), but this was not confirmed by Linde's mass spectrometric analysis, which indicated only 20 ppm carbon dioxide and no other compounds, except N_2 and H_2, at the detection limit of the analyzer.

ORIGINAL PAGE IS OF POOR QUALITY

The resistivity of an epitaxial film grown on 10 ohm-cm p-type silicon wafers measured 20 and 50 ohm-cm by Sistersville and Linde, respectively. Both were strongly n-type, indicating little p-type compensating doping. This corresponds to 2-4 ppb phosphorous dope in the silane. No heavy metals were detected by mass spectrometer analysis at a detection limit of 1 ppm.

The presence of 1.1% N_2 is due to carry-over from the DCS feed which is normally maintained under 275 kPa N_2 pressure during storage. Prior to its use in the silane unit, an attempt was made to desorb N_2 with helium by alternately pressurizing and purging. Since there is a 9:1 ratio between DCS feed and silane production (mass ratio), the 1.1% N_2 could result from 0.12% N_2 in the DCS feed. Appropriate specification on the maximum N_2 allowance in silane for deposition/pyrolysis applications will have to be established.

The 1.52% hydrogen in the silane could indicate a small amount of side reaction in the process. Based on the reaction

$$SiH_4 \longrightarrow Si + 2H_2$$

this would be the equivalent of a modest (0.75%) loss in yield. The source of H_2 could be a side reaction in the redistribution reactor, e.g.,

$$4\ HSiCl_3 \longrightarrow 2H_2 + 3SiCl_4$$

which could introduce 1.14 mole% silicon tetrachloride (STC) into the co-product trichlorosilane (TCS). The small amount of $SiCl_4$ (4.6%) in the TCS residue could result either from this side reaction or from the redistribution of TCS to DCS and STC according to:

$$HSiCl_3 \longrightarrow H_2SiCl_2 + SiCl_4.$$

In either case, the .75% loss of chemical efficiency is not significant; furthermore, the presence of a small amount of hydrogen in the silane product should not seriously affect any subsequent process such as pyrolysis or epitaxial deposition.

A discrepancy was observed in chlorosilane analysis. A certain amount of monochlorosilane (MCS) was expected because the product was introduced into cylinders until the on-line chromatograph detected 0.5% MCS in the effluent from the carbon bed. However, mass spectrometric analysis indicated no detectable chlorosilanes to a limit of less than 1 ppm. Resolution of this discrepancy will be pursued under the silane purity program.

1.2.2 Hydrogenation Process Studies

1.2.2a High-Pressure Reaction System

A high-pressure reactor was constructed to study the hydrogenation of silicon tetrachloride (STC) according to:

$$2\ H_2 + 3\ SiCl_4 + Si \longrightarrow 4\ HSiCl_3$$

The design details of the unit were described in the last quarterly report. A flow sheet for the system is shown in Figure 1.1 and a list of major equipment items is given in Table 1.1.

Table 1.1
MAJOR EQUIPMENT ITEMS IN THE HYDROGENATION UNIT

Equipment	Material	Comments
$SiCl_4$ Feed Tank	Brass	30 Gallon, hydrotested at 100 PSIG, 60 PSIG Pressure Rating
Whitey Model LP 10 Metering Pump	Working parts made of stainless Steel	Capacity: 6400 g/hr $SiCl_4$
H_2 Flow Capilary	Stainless Steel	1/8 inch in diameter, 11.5 ft. long, ΔP measured with DPX with 100% reading = 88 inches of H_2O
Constant H_2 Flow Device	Stainless Steel	Moore model 63SV flow controller
Silicon Charge Hopper	Carbon Steel	Diameter = 2" Length = 7" hydrotested at 225 PSIA
Vaporizer	Stainless Steel	10' of 3/8" tubing wrapped around a 2" mandrel and located inside of a ceramic heater

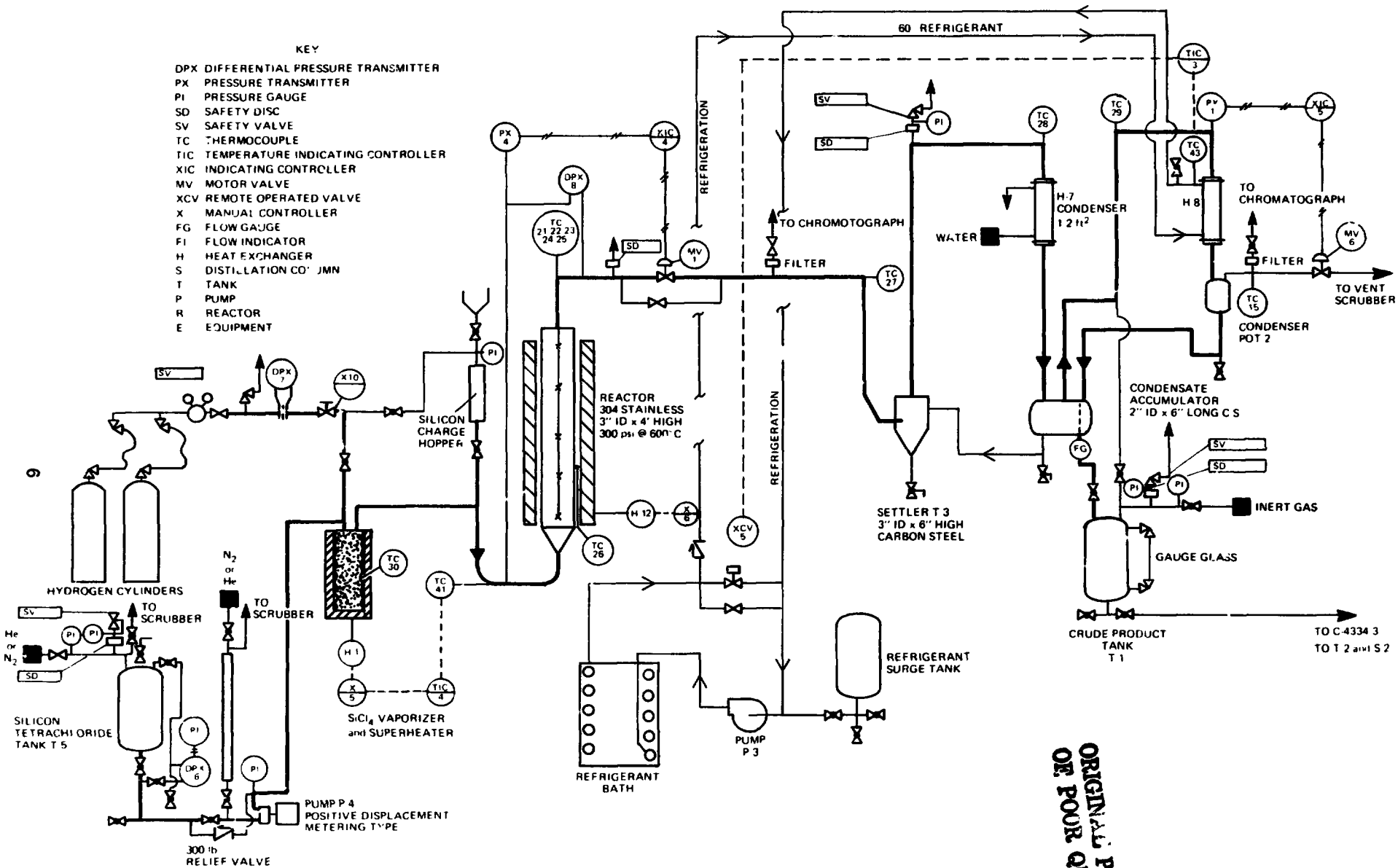

Figure 1.1
SILICON TETRACHLORIDE HYDROGENATION REACTOR

ORIGINAL PAGE OF POOR QUALITY

As a design basis for the hydrogenation reactor, the following parameters were used for the entrance cone angle, the diameter, and the length of the hydrogenation reactor:

- 10 second residence time;
- $H_2/SiCl_4$ molar ratio = 2;
- Maximum pressure = 300 psig (2070 kPa);
- Temperature = 550°C;
- Throughput = 7 kg/hr;
- Silicon particle size 65 x 150 mesh or an average of 150 microns.

Calculations showed that the reactor should have an entrance cone angle of 17°, a diameter of 3 inches, and a length of 4 feet.

The vaporizer length was designed on the following basis:

- Material In:
  H_2 (g) = 55 g-mole/hr at 25°C, P=300 PSIA;
  $SiCl_4$(l) = 27.5" at 25°C, P=300 PSIA;
- Material Out:
  H_2 (g) = 55 g-mole/hr at 500°C, P=300 PSIA;
  $SiCl_4$ (g) = 27.5 g-mole/hr at 500°C, P=300 PSIA;
- Vaporizer diameter = 3/8";
- Vaporizer wall temperature = 600°C;
- Vaporizer radiative heater temperature = 1200°C.

By considering heat-transfer coefficients for both the radiative shell side and for the tube side, a design length of 10.0 feet was calculated.

1.2.2b Fluidization Studies in a 3-Inch Glass Reactor

Silicon particles of proper size (65 x 150 mesh) for hydrogenation experiments were fluidized with N_2 at atmospheric pressure in a 3-inch diameter, 6-foot long Pyrex tube equipped with a 17° graphite entrance cone (Figure 1.2). This was done in order to anticipate the fluidization behavior of the stainless-steel hydrogenation reactor. In runs with and without a corrosion test rack placed inside the tube, the quality of fluidization was determined visually and the pressure drop (ΔP) vs. static bed height was measured. As shown in Figure 1.3, ΔP across the bed was proportional to the bed height. The quality of fluidization was best (lack of slugging or channeling) when the corrosion rack was placed inside the Pyrex tube.

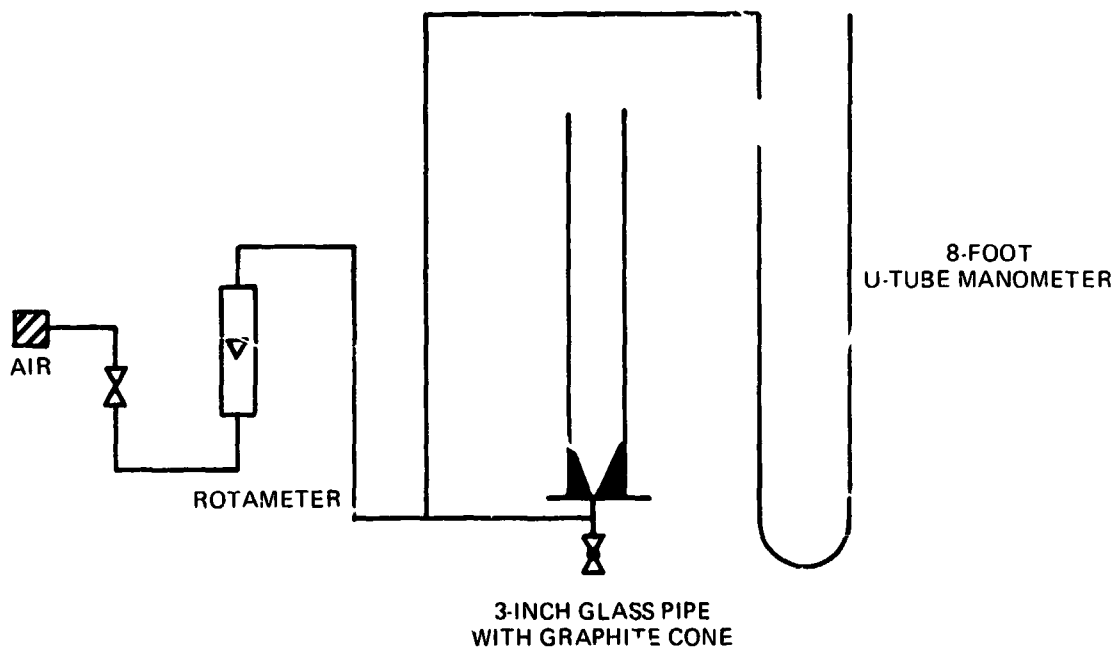

Figure 1.2
THREE-INCH GLASS FLUIDIZATION APPARATUS

1.2.2c Fluidization in a 3-Inch Stainless Steel Reactor

Silicon particles of 65 x 150 mesh were fluidized with N_2 at 100 lbs pressure in a 3-inch diameter, 4-foot long hydrogenation reactor equipped with a 17° graphite entrance cone. These experiments were made to measure the ΔP vs. static bed height in the reactor and to test the operation of the silicon charging system. This system worked well when operated with a large void space in the hopper outlet gas-solid transport line. As shown in Figure 1.3, the ΔP vs. bed height data agree fairly well with those obtained from the 3-inch glass reactor.

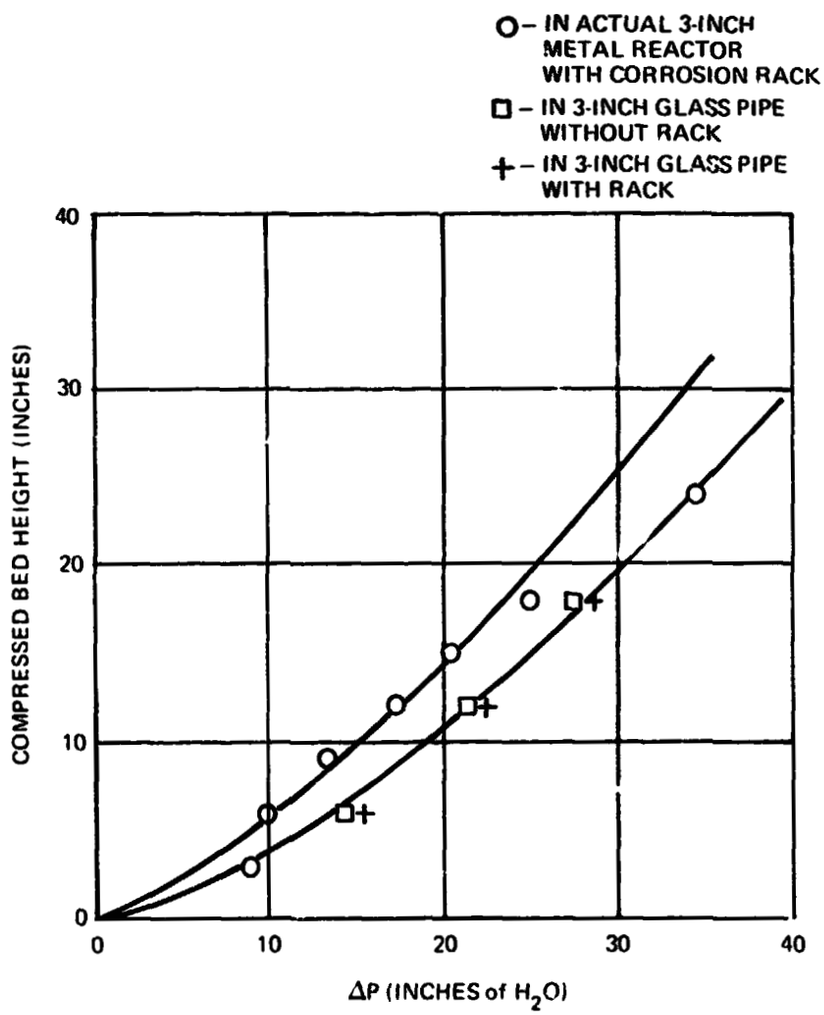

Figure 1.3
PRESSURE DROP vs. BED HEIGHT

ORIGINAL PAGE IS OF POOR QUALITY

1.2.2d Sampling System

A small unit was constructed to facilitate sampling from the reactor exit and from the -40°C condenser exit (Figure 1.2A). The unit was mounted on a panel for delivering samples to an on-line gas chromatograph.

Figure 1.2A
HYDROGENATION SAMPLING SYSTEM

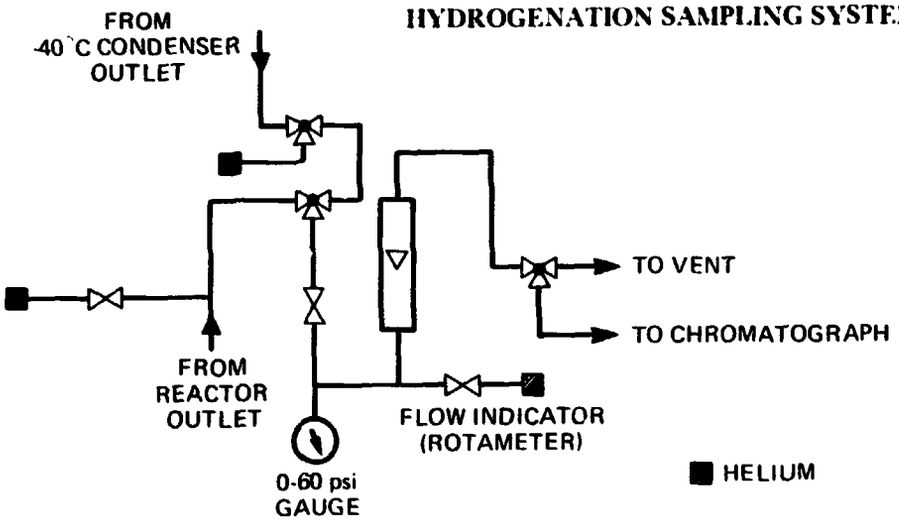

ORIGINAL PAGE IS
OF POOR QUALITY

1.2.2e Theoretical Aspects

The hydrogenation of silicon tetrachloride in a fluidized bed of silicon metal has been studied at various temperatures. An analysis of the overall reaction was initiated to develop a rationale for larger-scale reactor design and to determine the type of data needed.

In heterogeneous systems, the extent to which mass transfer controls the overall reaction rate is of fundamental importance. Since the hydrogenation reaction is heterogeneous, the significance of diffusional contributions to the overall rate gives information of considerable value for the design of equipment. For example, if a reaction is diffusion-controlled, only parameters which affect diffusion such as temperature or bulk flow rate will influence the observed reaction rate. Other parameters, like catalyst activity, will not influence the rate.

The Arrheneus equation:

$$\text{Rate} = K \operatorname{Exp}(-A/RT)$$

Where

K = a constant
A = activation energy
R = gas constant
T = temperature

can be used to evaluate the importance of diffusion on the rate of a heterogeneous reaction. For diffusion-controlled reactions, values for the activation energy are typically on the order of 4 Kcal/g-mole. For kinetically controlled reactions, these values are typically much higher (25-50 Kcal/g-mole). By studying the reaction rate at two or more temperatures, the activation energy (A) can be calculated and from it the relative importance of diffusion can be determined.

A preliminary evaluation of the hydrogenation reaction has shown an activation energy of about 10 Kcal/g-mole. This indicates that diffusion could be significant in the overall rate. Additional experiments will be carried out in laboratory and pilot plant-sized equipment, controlling the parameters of gas flow rate, silicon particle size, mole ratio, and silicon bed height to obtain more accurate data. If it is confirmed that diffusion contributes to the overall rate, then the observed reaction rate measured in a fluidized bed may be significantly slower than rates obtainable in a reactor system where diffusional restraints can be reduced or eliminated.

1.2.2f Raw-Material Characterization

The metallurgical silicon feed for $SiCl_4$ hydrogenation studies was characterized. The source silicon, ground to 32 x D mesh, was found to have the following distribution:

Mesh Size	Microns	Weight Fraction
+ 48 mesh	+297	56.05
48 x 65	297 x 210	14.15
65 x 100	210 x 149	16.95
100 x 150	149 x 105	5.56
150 x 200	105 x 74	3.02
200 x 325	74 x 44	2.86
-325	-44	1.42

The individual fractions were analyzed by atomic absorption spectroscopy; a modest variation in the purity was found between the fractions.

Mesh	Fe %	Cu ppm	Al %	Ca ppm	Pb ppm	Mn %
+48	.52	38	.28	5	19	.03
48 x 65	.57	32	.32	5	18	.08
65 x 100	.48	36	.30	6	20	.06
100 x 150	.65	39	.36	6	10	08
150 x 200	.83	47	.47	7	35	.09
200 x 325	1.33	88	76	9	14	.17
-325	2.01	203	1.07	9	34	.21

For initial experiments in the high-pressure fluid-bed reactor, the 65 x 100 mesh fraction will be used. This fraction was found to be more easily handled in small reactors at modest gas velocities. It is difficult to use the unclassified material, because the operating latitude between the fluidization of coarse particles and the elutriation of fines is very small. A quantity of the 65 x 150 fraction has been segregated in preparation for the experimental program.

ORIGINAL PAGE IS
OF POOR QUALITY

1.2.3 Integrated Process System

Construction of a 2-inch diameter x 60-inch high distillation column and of a 4-inch diameter redistribution reactor is in progress. This equipment, together with the existing silane process-development unit and the hydrogenation system, will permit to demonstrate an integrated silicon-to-silane process. While the hydrogenation unit is substantially complete and is in the initial start-up phase, the integrated unit is in the final piping stage; completion and initial start-up are anticipated during the next month. The flow chart for the portion of the unit starting with a TCS/STC mixture is shown in Figure 1.4. The capacity of the overall unit is anticipated to be limited by the diameter of the existing silane still. By receiving a more dilute (9.7%) DCS feed from the new facility, rather than pure DCS as originally operated, a higher reflux ratio will be required (5:1 vs. 2:1) to achieve a good separation. This will result in a decrease of silane production from .14 kg/hr to about .07 kg/hr. This is not a serious problem, however, because the system does appear to follow predictions based on an ideal system and would therefore be amenable to scale-up.

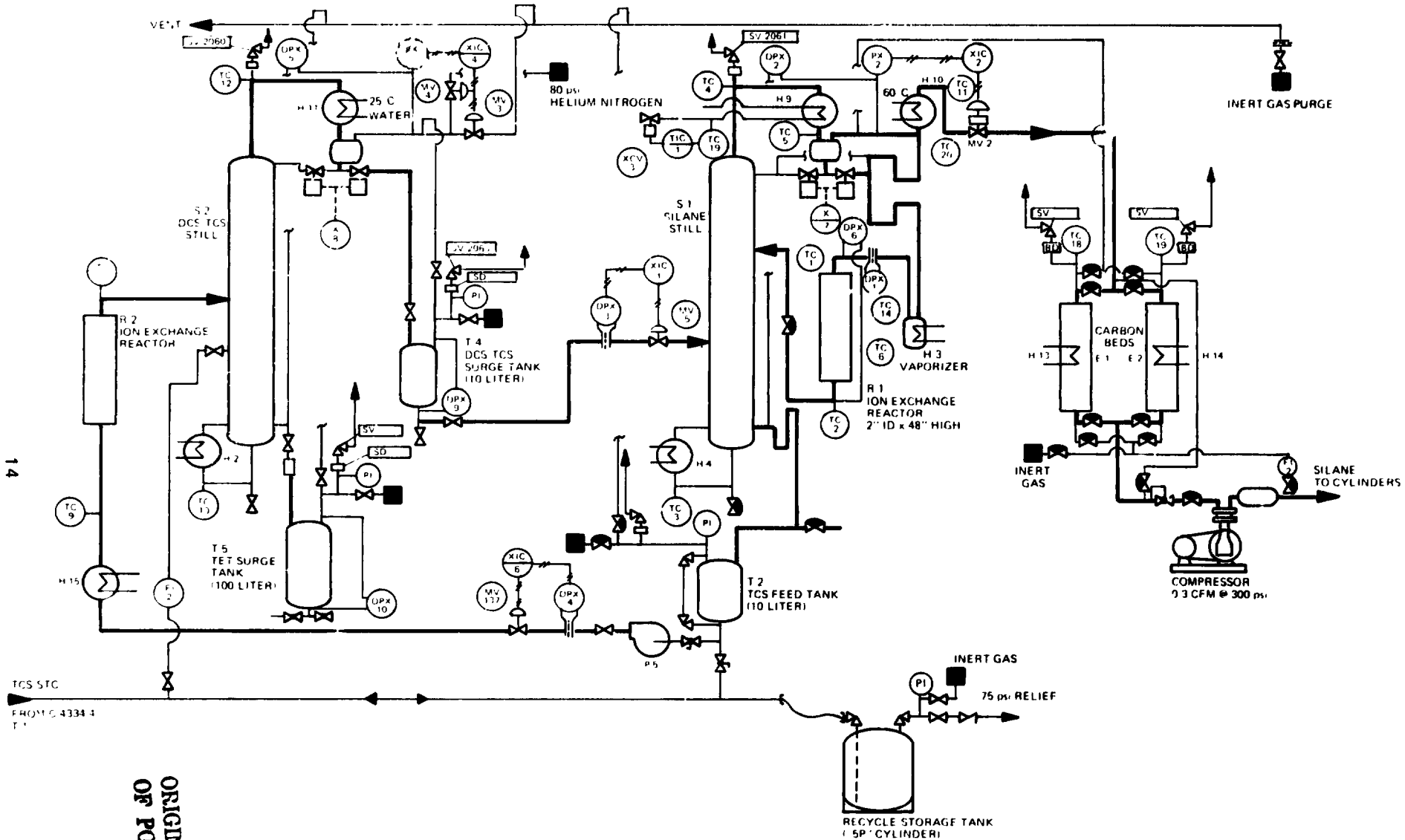

Figure 1.4
SILANE PROCESS DEVELOPMENT UNIT

ORIGINAL PAGE IS
OF POOR QUALITY

1.2.4 Laboratory Studies – Hydrogenation

The construction of a stainless-steel reactor for the hydrogenation under pressure of $SiCl_4$ to $HSiCl_3$ was completed. Following a safety review, the reactor was started without difficulties. The essential design feature of the laboratory hydrogenation reactor shown in Figure 1.5 is a thermostated vessel from which STC is evaporated into a hydrogen carrier to give the selected concentration of reactants. The reactor, a 2.54cm-diameter stainless steel tube with a support grid specially designed for good fluidization, is connected by electrically traced lines to a refrigerated condenser. A back-pressure controller on the condenser vent line maintains the desired operating pressure (up to 685 kPa). The condensed products are withdrawn periodically through a pressure-relief buffer tank for off-line analysis by gas-liquid chromatography.

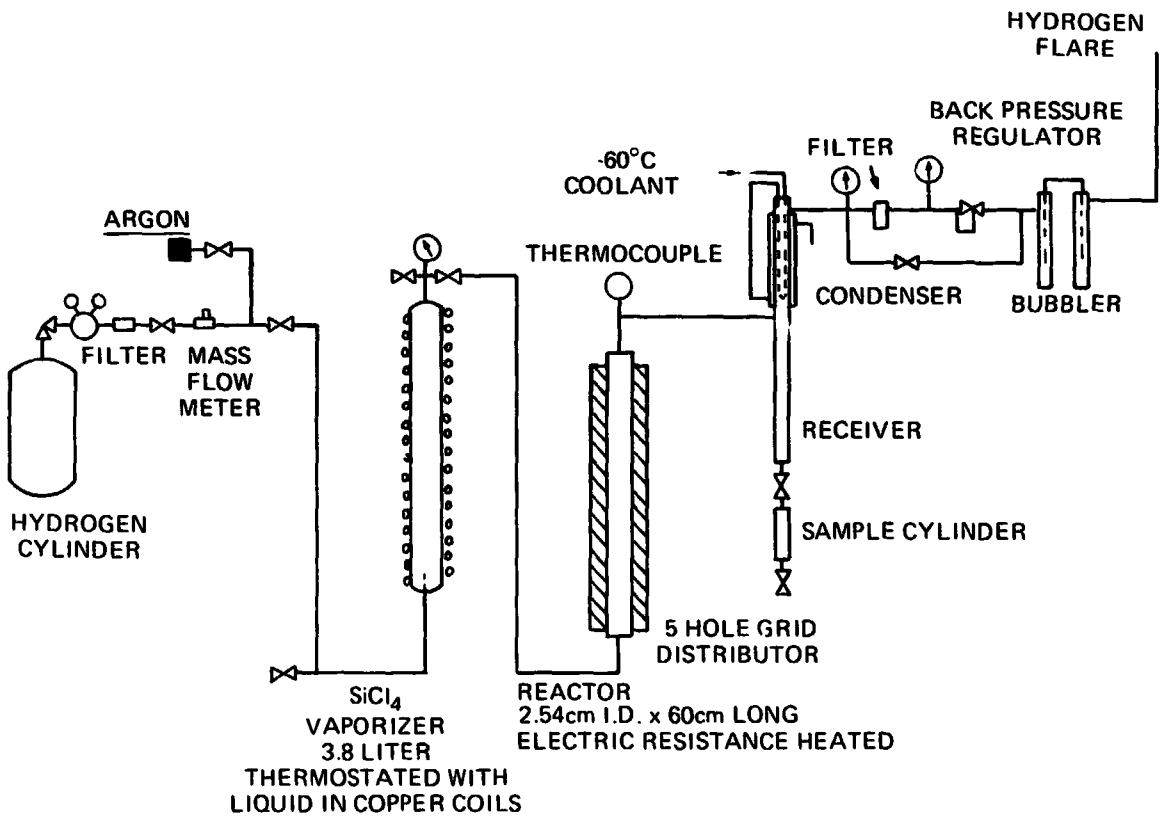

Figure 1.5
LABORATORY PRESSURE HYDROGENATION REACTOR

The reactor was calibrated (flowrates, temperatures, pressures, etc.) and a few preliminary experiments were carried out. The results are summarized in the following discussion.

In a preliminary experiment conducted to check out the reactor system, about 2,300 cc of freshly distilled silicon tetrachloride was charged into the stainless-steel $SiCl_4$ cylinder. The reactor was charged with 185g of 65 x 150 mesh Cu/Si mass containing about 2% copper catalyst; argon was fed into the reactor system to displace air. The following conditions were used:

• Reactor temperature	450°C
• Reactor pressure, set	50 psig (446 kPa)
• Hydrogen feed	630 std. cc/min
• $SiCl_4$ cylinder temperature	81°C
• $SiCl_4$ feed rate	172 g/hr
• $SiCl_2$: H_2, molar ratio	1 : 1.5
• Residence time, based on Cu/Si bed volume	16 sec
• Superficial linear gas velocity, @ 65 psia	0.07 ft/sec
• Reaction time, @ 450°C	3 hr

Gas-liquid partition chromatographic (glpc) analyses of the crude product showed about 3% yield of $HSiCl_3$.

The reactor was re-started and the reaction temperature was raised to 500°C. Samples of the reaction product mixture were collected every 30 to 60 minutes. Condensation of chlorosilane products from the gaseous reaction mixture by a Dry-Ice condenser was quantitative, as shown by a colorless hydrogen flame (the presence of chlorosilanes would give a smokey, bright-yellow flame). A small fluctuation of the hydrogen feed rate at the start of the experiment was due to a small drop of hydrogen pressure at the regulator. This was corrected and a constant hydrogen feed rate at 650 std. cc/min was achieved.

The yield of H_2SiCl_2 and $HSiCl_3$ steadily increased from about 8% to about 14% after 6 hours (Table 1.1). The steady increase of $HSiCl_3$ yield could be explained in terms of an "induction period" characteristic of a given Cu/Si contact mass. Evidently, this induction period results from changing surface characteristics of the Cu/Si mass. These changes could be due to a number of factors; for example, as silicon metal reacts away, the highly pitted solid surface produces a net increase in the total solid surface area; further, as the Cu/Si alloy is being consumed and regenerated, copper-rich areas spread over the entire silicon metal surface could yield a more homogeneous, and thus more active, Cu/Si mass. After 6.5 hours, the yield of $HSiCl_3$ was still increasing, thereby showing that the Cu/Si contact mass had not yet reached a steady state (Table 1.2). This suggests that, before equilibrium and kinetic data for the hydrogenation reaction are taken, the Cu/Si mass should be reacted until a steady state is attained. More work is in progress.

Table 1.2

HYDROGENATION of $SiCl_4$ at 500°C, 65 psia with 1:1.5 $SiCl_4$:H_2 FEED

Time of Sampling Hr.	Weight of Product Crude g.	Rate of Crude g/l	H_2 Gas(1) Feedrate c.c./min.	Residence(2) Time second	Product Composition H_2SiCl_2 %	$HSiCl_3$ %	Mole % $SiCl_4$ %
½	84.1	168.2	627	15.2	0.042	7.98	91.98
1	79.3	158.6	610	15.8	0.069	8.79	91.15
1½	78.2	156.4	601	16.1	0.068	9.27	90.66
2	70.1	140.2	530	18.1	0.070	9.90	90.03
3	194.6	194.6	650	14.0	0.079	9.37	90.55
3½	95.7	191.4	645	14.2	0.089	10.19	89.73
4	96.5	193.0	649	14.1	0.102	11.03	88.87
4½	102.5	205.0	650	13.7	0.070	11.83	88.10
5	102.9	205.8	650	13.7	0.112	12.61	87.28
5½	105.0	197.0	655	13.9	0.137	13.52	86.34
6	101.3	217.0	655	13.3	0.108	13.40	86.50
6½	100.4	200.8	650	13.8	0.154	14.28	85.56

(1) at 22°C and at atmospheric pressure

(2) based on Cu/Si bed volume of 162 cc.

1.3 CONCLUSIONS

- The production of high-purity silane via the redistribution of dichlorosilane has been demonstrated.

- The redistribution process closely follows laboratory reaction equilibrium data and ideal thermodynamic property rules with respect to vapor-liquid equilibrium and liquid mixture properties. Scale-up of the process should be straightforward.

- No significant degradation of the redistribution catalyst was noted in 137 hours of operation over a six-month period.

1.4 PROJECTED QUARTERLY ACTIVITIES

1.4.1 Laboratory Studies

- Determine the equilibrium and kinetics of the hydrogenation of silicon tetrachloride at elevated pressure.

- Examine the nature of the copper catalyst.

1.4.2 Process Development Operations

- Initiate start-up of both a high-pressure hydrogenation unit and an integrated trichlorosilane-to-silane demonstration unit.

- Confirm laboratory results on the hydrogenation reaction.

- Evaluate purification of silane using regenerable carbon adsorption.

2.0 SILANE PRODUCTION

2.1 INTRODUCTION

The objective of this program which started in January, 1977, is to establish the economic feasibility of manufacturing semiconductor-grade polycrystalline silicon by the pyrolysis of silane. The pyrolysis methods to be investigated involve a fluid-bed and a free-space process.

The development effort prior to the present quarter concentrated on the pyrolysis of silane in a free-space reactor and on the consolidation of the powder product by melting. As a partial demonstration of the capabilities of a moderate-size reactor, the current free-space reactor was operated for 5 hours and then shut down as scheduled.

During the current quarter, a fluid-bed reactor program was initiated, and some of the engineering and design problems associated with the construction of a high-temperature reactor were identified. Initial impurity analyses for the free-space reactor were completed, and identified sources of impurities were eliminated. Equipment was constructed for an enclosed, in-line system that will include: the current free-space reactor, a pneumatic powder transfer assembly, and a powder consolidator. A pellet-casting technique was developed to minimize product handling and contamination and to provide a tool for rapid product and process evaluation.

2.2 DISCUSSION

2.2.1 Silane Pyrolysis

2.2.1a Fluid-Bed Reactor

Under a program sponsored by Union Carbide, experiments with a fluid-bed reactor established that dense, coherent coatings of silicon could be obtained on silicon particles. However, the coherent coatings were obtained under restricted conditions. The fluid-bed reactor used to establish the plating feasibility was a 76mm I.D. stainless-steel reactor, with a cone-shaped bottom, in which the bed behavior and the mode of interaction between gases and particles could not be observed. To further the fluid bed reactor technology for plating silicon from silane pyrolysis onto seed particles, a glass reactor – similar to the steel reactor – was constructed. The following paragraphs describe the glass reactor and the seed-bed behavior observed at room temperature with various feedstocks, configurations, and operating conditions.

Figure 2.1 is a photograph of the current glass fluid-bed reactor with a cone-shaped bottom (30° total angle). Figure 2.2 shows the gas-flow system. The fluidizing gas (helium or argon) was injected through a stainless-steel injector. Cone-shaped Teflon ends with various orifice diameters were inserted into the injector; the Teflon orifice inserts did not contain screens or filters. An O-ring seal prevented the seed-bed particles from being wedged between the injector and the glass. A porous metal filter, with an average pore size of 40μm, effectively prevented fines from being vented during the experiments.

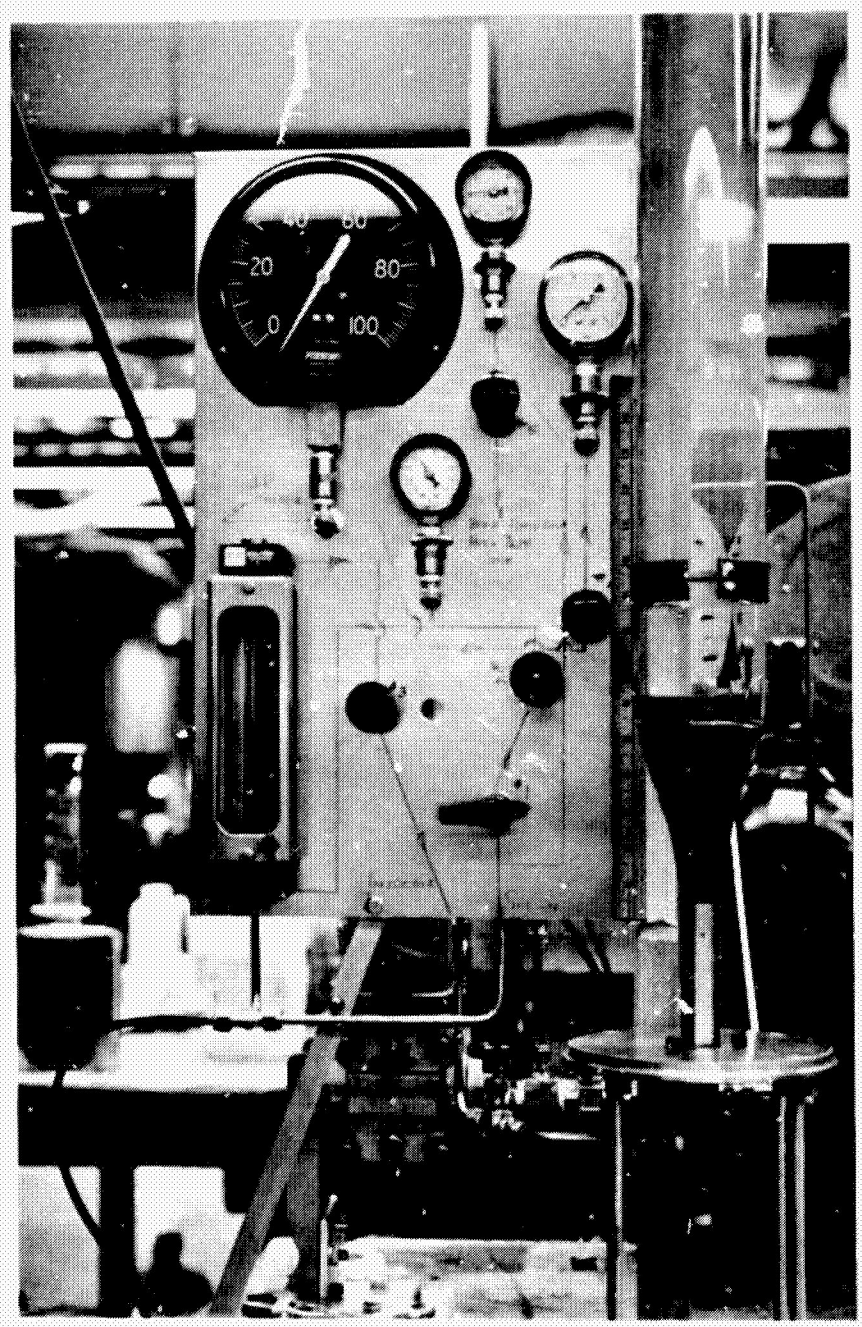

Figure 2.1
GLASS FLUID BED REACTOR AND CONTROL PANEL

ORIGINAL PAGE IS
OF POOR QUALITY

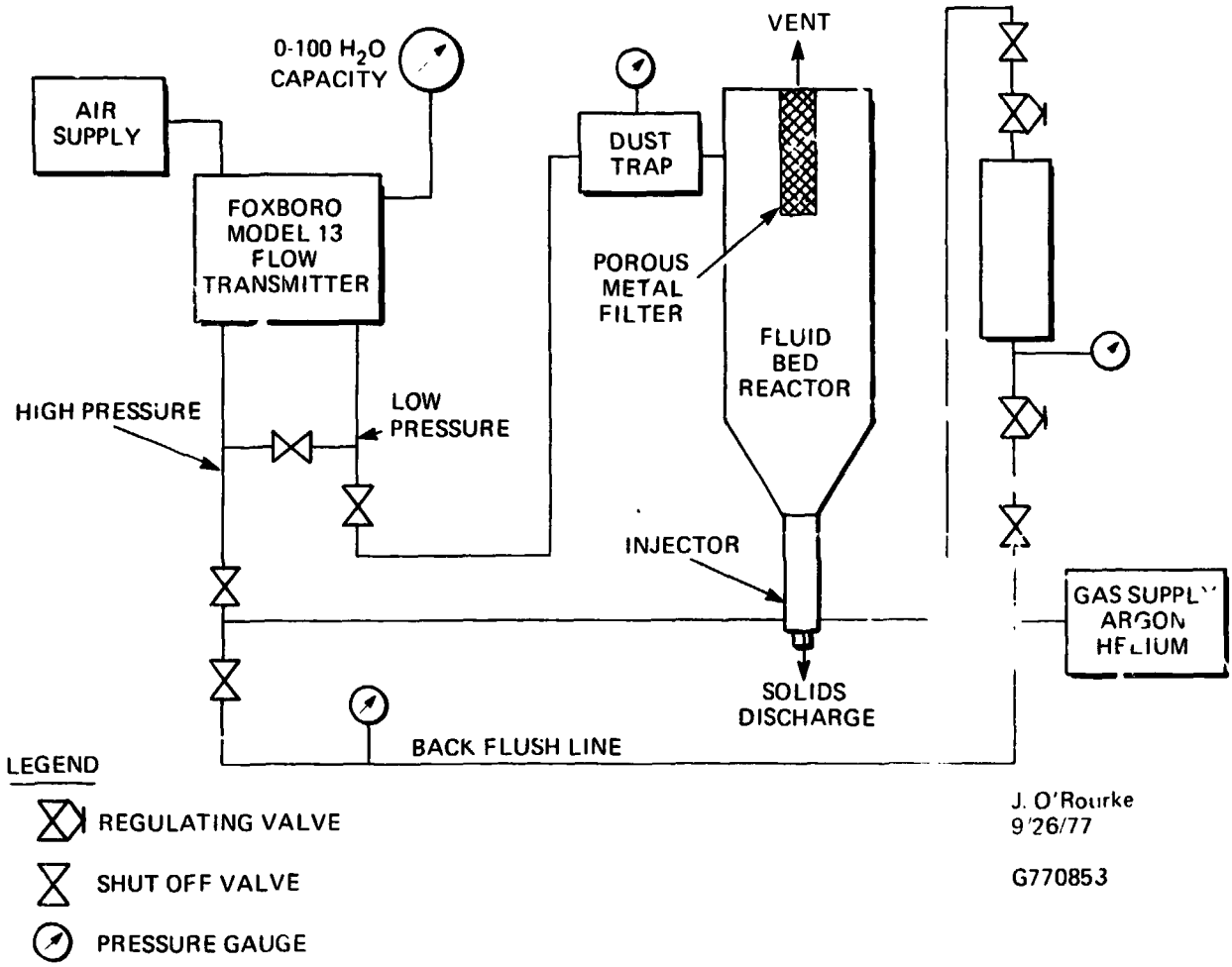

Figure 2.2

ROOM TEMPERATURE FLUID BED REACTOR GAS FLOW SCHEMATIC

Experiments were conducted with this reactor over a range of gas velocities for various combinations of gas, particle size distribution, gas inlet orifice diameter, and bed depth. For operating modes other than spouting, the bed behaved in an erratic and unstable manner. A second reactor is being constructed with a modified gas-feed system for increased bed stability. This reactor will be capable of operating with a water-cooled metal injector and/or with distributor plates. The reactor tube will be made of clear quartz. A resistance heater capable of operating at temperatures of up to 1100°C will also be constructed. The design and operating data obtained from the high-temperature quartz reactor will be used for the design of a silane pyrolysis reactor.

2.2.1b Free-Space Reactor

The free-space reactor effort concentrated on three primary tasks. One major task was to identify the sources of product impurity and to engineer an enclosed in-line system for minimizing contamination. A discussion of product purity is given in Section 2.2.3. A second task concentrated on determining the conditions necessary for the formation and elimination of semi-solid silicon that intermittently formed at the tip of the gas injector and on the reactor wall. The third task identified the effects of reactor temperature and of injected silane temperature on the particle size of the silicon powder product.

The free-space reactor was modified to provide an enclosed system for minimizing product contamination. One modification permitted the pneumatic transfer of silicon powder, either during a pyrolysis experiment or between experiments, without dismantling the reactor assembly. The second modification was a pneumatic sampler. The sampler transferred powder during an experiment from the reactor assembly into Teflon containers. When construction is completed, the sampler assembly will be capable of collecting powder from four consecutive experiments without dismantling the free-space reactor or the sampler.

In some pyrolysis experiments, friable clusters of silicon particles (defined as semi-solids) formed on the tip of the gas injector and on the reactor wall. The semi-solids formed in a region of the reactor wall where the temperature was approximately 625°-750°C. No semi-solid injector cones formed when the gas near the injector orifice was below 600°C. It was demonstrated that temperature was the major parameter controlling the extent of semi-solid formations. By adjusting the reactor temperature and the position of the injector relative to the hot zone, the extent of semi-solids growth should be controllable during continuous operation.

In all pyrolysis experiments some silicon adheres to the walls of the reactor. This silicon was either a loose, fluffy powder or clusters of semi-solids. Both types of deposits were examined with a Scanning Electron Microscope (SEM). The particles of the loose powders are basically spherical with protruding nodules (Figure 2.3) characteristic of vapor-deposited growth. Examination of the semi-solids (Figure 2.4) shows that extensive particle growth and surface area reductions occurred; necking between particles was also observed. Although the particles appeared to have a high density, this was only true on the microscale. At lower magnifications (Figure 2.5), it is seen that the particles formed into clusters that were only weakly bonded to one another.

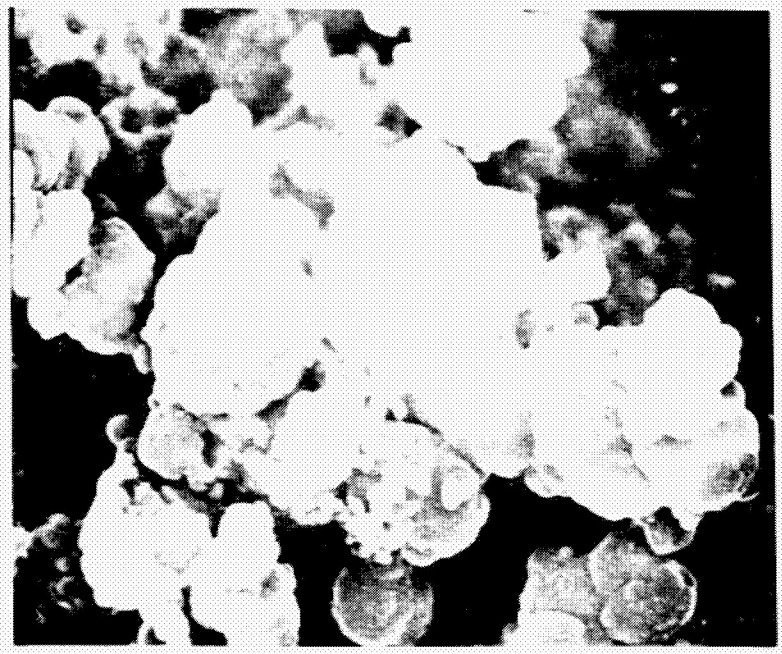

27080204-1-S1 15000X

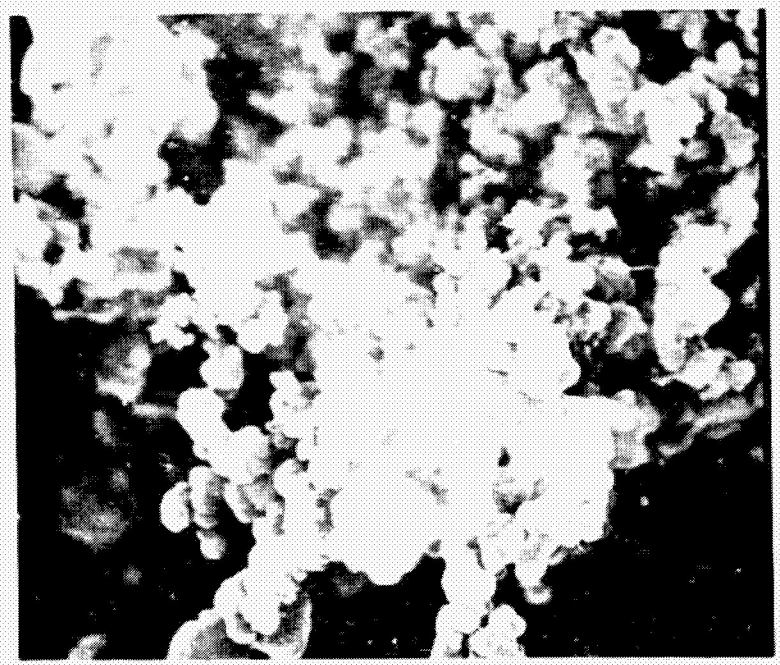

27080204-1-S2 15000X

Figure 2.3

SEM OF LOOSE POWDER FROM FREE-SPACE REACTOR

(15,000X)

ORIGINAL PAGE IS
OF POOR QUALITY

27080204-3-S1 15000X

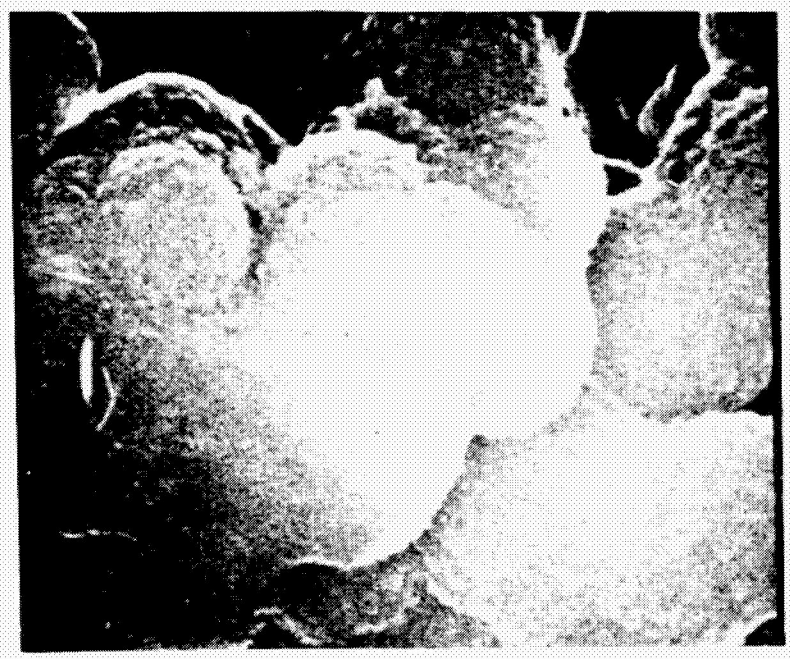

27-80204-3-S4 15000X

Figure 2.4
SEM OF SEMI-SOLID WALL DEPOSITS IN FREE-SPACE REACTOR
(15,000X)

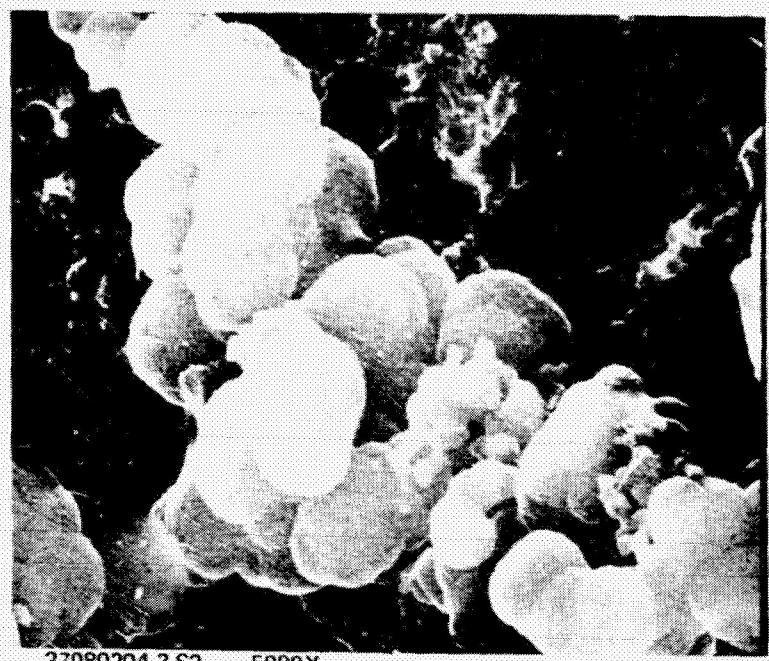

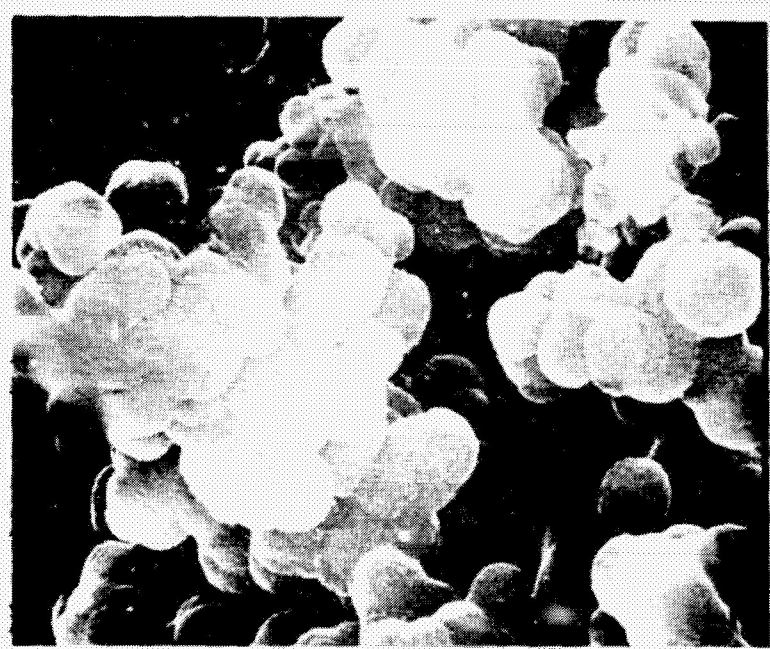

Figure 2.5
SEM OF SEMI-SOLID WALL DEPOSITS IN FREE-SPACE REACTOR
(5,000X)

ORIGINAL PAGE IS
OF POOR QUALITY

An analysis of all experimental data obtained with the free-space reactor indicated that both the injected gas temperature and the reactor temperature affect the surface area (particle size) of the powder product. Low injector-gas and reactor temperatures favor the formation of large particles while elevated temperatures favor the formation of smaller particles. Due to material and engineering considerations, there exist maximum and minimum temperature limits. Thus, the injected gas temperature must remain between -111°C and a measured 460°C; these are the temperatures at which silane liquefies or is pyrolyzed inside the injector. The reactor wall temperature must be held between 790°C and 1050°C. The former is the lowest temperature at which 100% decomposition efficiency was obtained; the latter is the highest temperature at which the Monel reactor can be used safely. Calculations indicate that particles with calculated* average diameters between 0.05μm and 1μm should be obtained at the temperature extremes. Other reactor configurations and operating conditions will be examined in a continuing effort to produce silicon particles of sufficiently large diameter for use as seed-bed particles for the fluid-bed reactor.

2.2.2 Silicon Consolidation

A large portion of the consolidation effort was devoted to the design, material procurement, and construction of an enclosed apparatus for powder storage, transfer, melting and casting. The apparatus (Figure 2.6) can be used to consolidate product from the fluid-bed or the free-space reactor (for now, it will be attached to the free-space reactor). The furnace portion of the apparatus was designed to melt a maximum of 5.2 kg of silicon in a 152mm-diameter quartz crucible. To melt this quantity of silicon, both hoppers will be needed to contain the powder. For most melting and casting experiments, smaller-diameter crucibles will be used in conjuction with the lower hopper. Silicon powder will be fed from the lower hopper to the melter through a quartz tube. A vibration/gravity feed will be used to control the powder flow rate. The lid of the assembly has provisions for inserting quartz tubes for the suction-casting of rods. The system will be heated inductively and melt temperatures will be determined optically. The consolidation apparatus will be in operation during the next quarter.

* Particle diameters were calculated from krypton-adsorption surface area data assuming spherical particles

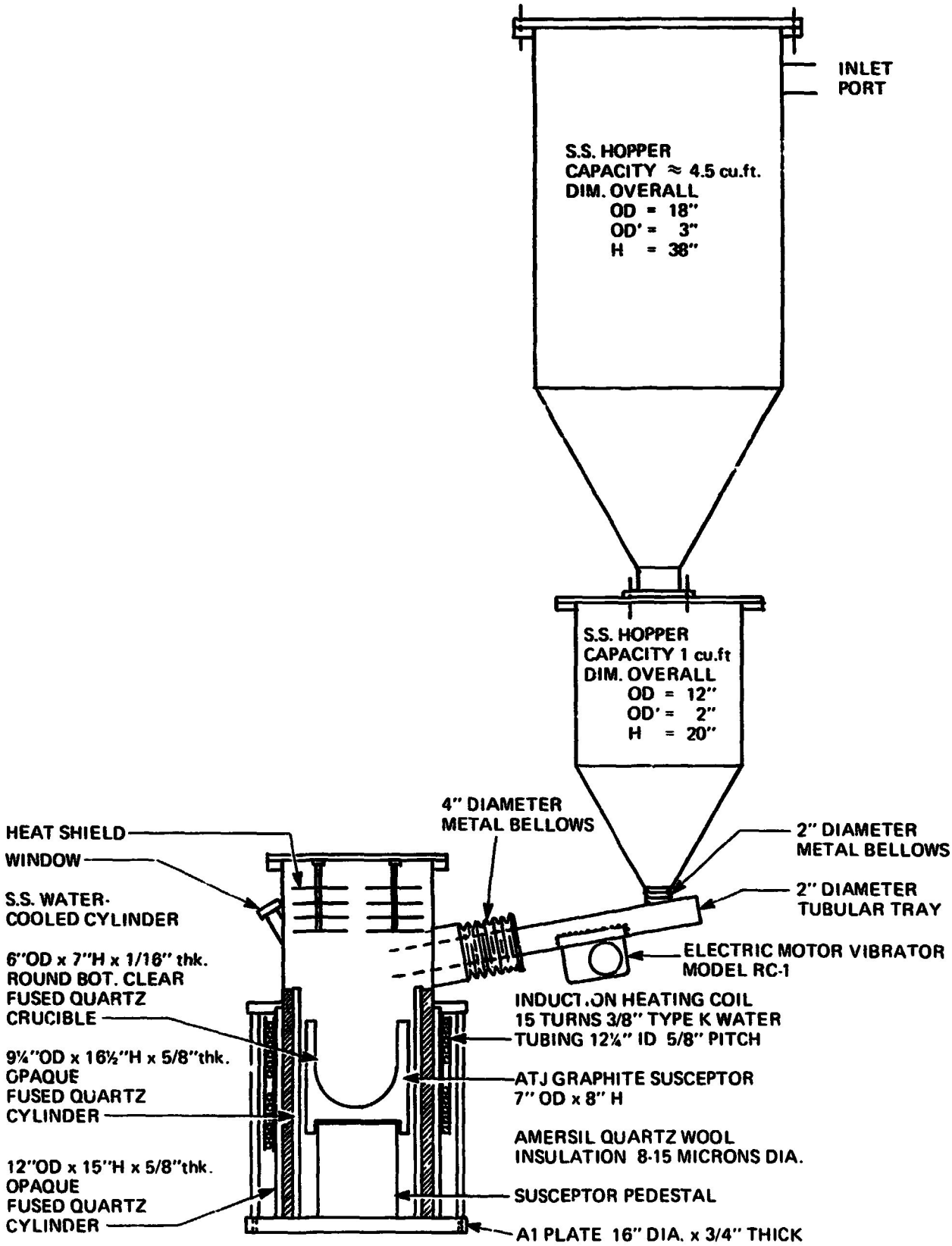

Figure 2.6

SCHEMATIC OF POWDER STORAGE, TRANSFER, AND MELTING APPARATUS

ORIGINAL PAGE IS
OF POOR QUALITY

A pellet-casting technique was developed to minimize powder handling and contamination and to provide samples for rapid product and process evaluation. In the new pellet-casting method, silicon powder was loaded into a specially designed quartz crucible shaped like a test tube. The closed lower end of the crucible contained a blown bubble of approximately 0.1mm wall thickness. The crucible and its contents were sealed in a resistance-heated furnace and the silicon was melted either under vacuum or in an argon atmosphere. On cooling, the molten silicon solidified in the thin-walled bubble of the crucible. The thin quartz broke, yielding a solidified silicon pellet which was free of cracks. In the future, crack-free pellets will be used for spark-source mass spectroscopic analysis and for electrical resistivity and conductivity analyses. This analysis technique will provide a tool for evaluating the product and for determining the effects of alterations in engineering design.

2.2.3 Product Purity

A major goal of the silicon program is to demonstrate that the polycrystalline product is of sufficient purity to meet intended uses. To accomplish this goal, the impurity sources must be identified; accordingly, the objective of current analyses was to identify sources of contamination associated with both the production of powder in the free-space reactor and with the process of melting and casting the powders into rods. A similar procedure will be followed later for fluid-bed reactor seed material and for the final product.

An impurity-concentration method was used for analyzing both powder and rod samples. The method entailed the dissolution of silicon samples in an HF/HNO_3 solution; carbon, in the form of silicon carbide, precipitated out and volatile fluorides of silicon, boron, and of some less critical elements were removed by evaporating the liquid; the residue contained the remaining elements in a 1000-fold increased concentration. An induction-coupled, plasma-emission spectroscopic analysis was made for 34 elements in the residue. With this concentration method, the detection limits for 26 of the 34 elements were reportedly less than 0.5μg/g. Analyses for carbon, oxygen, and nitrogen were performed using the standard combustion, Leco, and Kjeldahl methods, respectively. The resistivities of cast rods were determined on polished (600 grit) rod sections using a standard four-point probe technique. A thermal probe method was used to determine the conductivity type.

To identify the sources of impurities associated with powder production in the free-space reactor, a grid of powder samples from several experiments was analyzed. The initial test grid included duplicate samples of control specimens, samples of powder prepared from three different cylinders of silane*, samples from experiments where nickel or graphite liners were used in the hot zone of the reactor, and samples from one experiment in which a single graphite liner was used for the third time. Impurities derived from the different cylinders of silane were below the minimum detection limits of the current analysis method.

In addition to potential contaminants from raw materials, other possible sources of contamination were: (1) airborne contaminants that settled either inside the reactor assembly or on the silicon powders whenever the reactor was opened; (2) contaminants introduced during the physical removal of powder from the reactor assembly into storage or sampling containers; and (3) contaminants arising from the reaction of silane or silicon with the reactor liners in the hot zone.

When a nickel liner was used, a nickel-silicon interaction occurred and contaminated the free-space reactor powder with small pieces of non-magnetic scale. The silicon powders from two experiments in which new graphite liners were used contained substantial quantities of Cr, Fe, and Ni. Since powders from two other new graphite-liner experiments contained much lower levels of these metals, the impurity source may have been airborne. The total metallic impurity content of silicon powder obtained from an experiment in which a graphite liner was used for the third consecutive experiment was 8μg/g. The concentrations of individual metallic impurities were near the lower detection limits of current analysis techniques. It is anticipated that powders from experiments utilizing a quartz reactor liner will require a more sensitive analytical method.

In an effort to identify impurity sources associated with the rod-casting operation, rod sections from three castings of free-space reactor powder and two control samples were analyzed. One of the control samples was a piece of semiconductor silicon, while the other was a section of the semiconductor stock recast in the current rod-casting apparatus. All cast rod sections contained impurities in the low μg/g range. A duplicate analysis of the simiconductor silicon indicated that impurity levels were at the lower limits of detection. Consequently, more sensitive analytical methods (such as neutron activation analysis or spark-source mass spectroscopic analysis) are needed to identify impurities derived from the rod-casting procedure.

* The silane used was a Union Carbide product, guaranteed to be n-type with a minimum epi electrical resistivity of 100 ohm-cm. It is very likely that the metallic impurities in the silane are below the detection limits of the current mass spectroscopic technique.

A rapid method for evaluating the quality of fully dense polycrystalline silicon consists of determining its electrical resistivity and conductivity type. The seimconductor silicon had a resistivity of at least 50 ohm-cm and was weakly p-type. More accurate resistivity values could not be obtained because the sample had too many minute cracks. The recast semiconductor silicon was also weakly p-type and had resistivity values ranging from 10 to 140 ohm-cm. Rod sections cast from free-space reactor powder were strongly p-type with resistivity values ranging from 0.2 to 4 ohm-cm. It was encouraging that powders produced under operating conditions that included physical handling and exposure to atmospheric contaminants provided silicon rods with such high resistivity values. Substantially higher resistivities are anticipated for samples produced by the enclosed in-line system.

2.3 CONCLUSIONS

Experiments conducted with a glass fluid-bed reactor at room temperature demonstrated the need for observing bed behavior with various feedstocks, configurations, and operating conditions. No better method is currently available for ascertaining the behavior of the seed bed and for determining whether the bed is operating in a stable mode. Experiments similar to those conducted at room temperature will be conducted at elevated temperatures in the quartz reactor.

The free-space reactor is still considered a potential source for fluid-bed reactor feedstock (50μm minimum diameter particles). Experiments demonstrated that significant changes in the particle size obtained from the free-space reactor will not occur merely from changes in the thermal environment. Other operating and configurational parameters may also influence particle size, and their specific effects remain to be established.

Silicon semi-solids formed in the free-space reactor are potential roadblocks for continuous, long-term operation. The conditions under which semi-solids formed were established and steps taken to eliminate them.

Impurity sources in the free-space reactor, identified through mass spectroscopic analysis, were eliminated. Reactor modifications for pneumatic powder transfer and sampling, currently under development, should further improve product purity. Optimum polycrystalline silicon purity is expected once the enclosed in-line free-space reactor and silicon consolidator system are completely operational.

The enclosed reactor/consolidator system consists of a reactor, a pneumatic powder transfer system, a storage hopper, a controlled feed slide, and a melter; all individual elements are potential sources of powder contamination. Powder samples taken from various locations within the system can be rapidly consolidated into crack-free pellets for resistivity and purity analysis. The pellet-casting method was developed during the current report period.

2.4 PROJECTED FOURTH QUARTER ACTIVITIES

2.4.1 Fluid-Bed Reactor

- Construct and operate a high-temperature quartz reactor for studies of bed behavior and for testing various component designs.
- Design and construct a fluid-bed reactor in which silane is pyrolyzed.
- Continue to evaluate methods of producing silicon powder for use as a feedstock for the fluid-bed reactor.

2.4.2 Free-Space Reactor

- Conduct experiments to establish the dependence of product particle size on reactor configuration and operating conditions.
- Complete reactor modifications required to extract powder samples for purity analysis between experimental runs without dismantling the reactor.
- Optimize reactor modifications for in-line transfer of powder from the settling chamber to a hopper.
- Continue to establish powder contamination sources and to engineer the system to eliminate these sources.

2.4.3 Silicon Consolidation

- Complete construction of in-line melt consolidation apparatus and optimize its operation.
- Produce a resistivity and conductivity apparatus and evaluate its capabilities as a process and product monitor using cast pellets as samples.