General Disclaimer

One or more of the Following Statements may affect this Document

- This document has been reproduced from the best copy furnished by the organizational source. It is being released in the interest of making available as much information as possible.

- This document may contain data, which exceeds the sheet parameters. It was furnished in this condition by the organizational source and is the best copy available.

- This document may contain tone-on-tone or color graphs, charts and/or pictures, which have been reproduced in black and white.

- This document is paginated as submitted by the original source.

- Portions of this document are not fully legible due to the historical nature of some of the material. However, it is the best reproduction available from the original submission.

Produced by the NASA Center for Aerospace Information (CASI)

JPL PUBLICATION 78-65

DSN 100-Meter X- and S-Band Microwave Antenna Design and Performance

W. F. Williams

August 1, 1978

National Aeronautics and
Space Administration

Jet Propulsion Laboratory
California Institute of Technology
Pasadena, California

CONTENTS

1.0 INTRODUCTION ---------- 1

2.0 SUMMARY ---------- 3

3.0 THE PROGRAM AND TEST CASES ---------- 6

4.0 CONCLUSIONS ---------- 24

REFERENCES ---------- 26

APPENDIXES ----------

A. THE PROGRAM FOR CALCULATING A DUAL SHAPED REFLECTOR SYSTEM ---------- A-1

B. THE PROGRAM FOR PHASE ADJUSTMENT OF SCATTERED PATTERN FOR EFFICIENCY CALCULATIONS ---------- B-1

C. SAMPLE RUN OF SHAPING AND PHASE ALTERATION ---------- C-1

FIGURES

3-0. The Coordinate System For Shaping ---------- 27

3-1. Geometry for Phase Alteration ---------- 28

3-2. The Full Scale Horn ---------- 29

3-3. Corrugated Horn Geometry ---------- 30

3-4. The 14 deg Horn, 67 in. Aperture, 2.005 Grooves, 8.415 GHz ---------- 31

3-5. The 14 deg Horn, 67 in. Aperture, 2.295 GHz, Phase Center of X-Band (141 inches behind aperture) ---------- 32

3-6. General Configuration for Shaped Antenna ---------- 33

3-7. Configuration Calculations ---------- 34

3-8. Vertex to Horn Phase Center Clearance for Various Horns and F/D ---------- 35

3-9. Clearance to Top of Horn ---------- 36

3-10. A "Best Fit" Solution Using a 14° Horn, 14° Taper, Shaped to X-Band Pattern ---------- 37

3-11(a). 3938X Dish, 14DH-14T, V = 42.3 ft The 170 in. Hole, X-Band X14DH at 14 deg, 21.54 dB Taper ----- 38

3-11(b). 3938 X Dish, 14DH-14T, V = 42.3 ft The 170 in. Hole, X-Band X14DH at 14 deg, 21.54 dB Taper ----- 39

3-11(c). 3938X Dish, 14DH-14T, V = 42.3 ft The 170 in. Hole, S-Band S14DH at 14 deg, 16.67 dB Taper ----- 40

3-11(d). 3938X Dish, 14DH-14T, V = 42.3 ft The 170 in. Hole, S-Band S14DH at 14 deg, 16.67 dB Taper ----- 41

3-12. A "Best Fit" Solution Using the 14° Horn, 14° Taper, Shaped to the S-Band Pattern ---------- 42

3-13(a). 3938S Dish, 14 DH-14T, V = 42.5 ft The 170 in. Hole, X-Band X14DH at 14 deg, 21.54 dB Taper ----- 43

3-13(b). 3938S Dish, 14DH-14T, V = 42.5 ft The 170 in. Hole, X-Band X14DH at 14 deg, 21.54 dB Taper ----- 44

3-13(c). 3938S Dish, 0.325, V = 42.5 ft The 170 in. Hole, S-Band S14DH at 14 deg, 16.67 dB Taper ----- 45

3-13(d). 3938S Dish, 0.325, V = 42.5 ft The 170 in. Hole, S-Band S14DH at 14 deg, 16.67 dB Taper ----- 46

3-14. The "Best Fit" Solution to the 11 deg Horn at 11 deg Taper (16.54 dB) - "S"-Band Shaping ------- 47

3-15(a). 3938S Dish, 11DH, 11DT, V = 47 ft The 170 in. Hole, S-Band Shape X11DH at 11 deg, 21.57 dB Taper ---------- 48

3-15(b). 3938S Dish, 11DH-11Dt, V = 47 ft The 170 in. Hole, S-Band Shape X11DH at 11 deg, 21.57 dB Taper ---------- 49

3-15(c). 3938S Dish, 11DH, 11DT, V = 47 ft The 170 in. Hole, S-Band Shape S11DH at 11 deg, 16.64 dB ---------- 50

3-15(d). 3938S Dish, 11DH-11DT, V = 47 ft The 170 in. Hole, S-Band Shape S11DH at 11 deg, 16.54 dB- ---------- 51

3-16. The 14 deg Horn with 120 in. Aperture, Freq = 2.295 GHz (phase center 225 in. behind aperture) ---------- 52

3-17. The "Best Fit" Solution Using a 120" Aperture, 14° Horn, 14° Taper, Shaped to S-Band Pattern ----- 53

3-18(a). 120 in. Aperture S-Dish, V = 42.5 ft The 170 in. Hole, S-Band Shape X14DH-67 at 14 deg, 21.54 dB Taper ---------- 54

3-18(b). 120 in. Aperture S-Dish, V = 42.5 ft The 170 in. Hole, S-Band Shape X14DH-67 at 14 deg, 21.54 dB Taper ---------- 55

3-18(c). 120 in. Aperture S-Dish, V = 42.5 ft The 170 in. Hole, S-Band S14DH-120 at 14 deg, 18.32 dB Taper ---------- 56

3-18(d). 120 in. Aperture S-Dish, V = 42.5 ft The 170 in. Hole, S-Band S14DH-120 at 14 deg, 18.32 dB Taper ---------- 57

TABLE

3-1. Summary of Results ---------- 23

ABSTRACT

This report covers the studies made of the RF performance of large reflector antenna systems (100 meters) when using the high efficiency dual shaped reflector approach. The JPL Shaping Program has been updated to obtain more accurate results and to permit the shaping calculations of very large systems. A new technique was added to also improve blockage efficiency and a new program was prepared which altered phase so that the scattered field from a shaped surface could be used in the JPL efficiency program.

A new dual band (X-S) microwave feed horn is used in the shaping calculations. A great many shaping calculations were made for various horn sizes and locations and final RF efficiencies are reported. A conclusion is reached that when using the new dual band horn, shaping should probably be performed using the pattern of the lower frequency.

1.0 INTRODUCTION

This report presents detailed results of a study to define microwave performance of a very large aperture system, 100 meters in diameter, operated at X- and S-bands with a common aperture feedhorn. Because it is cost effective, the maximum possible aperture efficiency (effective collecting area) is sought, especially at X-band for the future DSN high rate telemetry requirements. While seeking maximum efficiency, the related rear spillover, which contributes to system noise temperature, must be, and is, carefully considered.

In related studies, an overall microwave aperture efficiency of 75% at X-band appeared feasible. 75% includes the RF optics efficiency, which is addressed in this report and is typically 92-94%, a small term due to dissipative losses, as well as RF surface tolerance efficiency and RF blockage (feed support) efficiency. This report will not consider the dissipative losses nor the latter two factors which are a function of detailed structural design.

The first step in achieving high aperture efficiency is to obtain a uniform illumination across the reflector aperture, for maximum illumination efficiency, while at the same time maximizing all other efficiencies, i.e., reducing or nearly eliminating forward spillover from the cassegrain system and reducing rear spillover, while maintaining the (generally already high) remaining efficiencies of a standard cassegrain system: feed phase efficiency and cross-polarization efficiency.

The special shaped dual reflector antenna system is the solution selected to obtain the very high illumination efficiency. This technique was developed about 15 years ago and JPL has had a computer program for obtaining special shaped solutions for over 10 years [1,2]. Conventional (generally wideband) feedhorn technology is compatible with this synthesis. The object of this study is to update the dual shaped reflector program and exercise it for various feed horn and antenna parameters and various frequencies and obtain practical designs and design variations which achieve very high overall efficiencies.

2.0 SUMMARY

2.1 Program updating. When the shaping program was first used for 100 meter X-band synthesis, some shortcomings became evident. The program had not before been used on such a large (D/λ) reflector and the calculations of coordinates for the subreflector were not complete as a result. In this case, subreflector coordinates were not established all the way to the reflector axis of symmetry and these final points were determined by extrapolation of data near the axis. The result was a near flat or mirror-like subreflector in the central region with an undesirable peak of energy illuminating the primary reflector in its central region.

The program has been revised and now obtains accurate coordinates throughout this central region and also at the outer edge.

2.2 An Added Program Capability. A facility was added to the shaping program for obtaining a null in the central region of the illumination pattern. One chooses to do this to avoid significant illumination energy across that area which is blocked by the subreflector. Hence the blockage efficiency may be greatly increased, becoming greater than 99% for the large dual reflector systems. Additional benefits accrue in the far field; improved pattern response and reduction of large antenna self-multipath, a consideration in precision ranging and VLBI systems.

2.3 A New Program. A new computer program was written for making phase adjustments to the calculated scattered field from the shaped subreflector. This is necessary if the scattered pattern is to be used in the standard JPL efficiency calculation program. The scattered field from the subreflector (quasi-hyperboloid) illuminates the main reflector

(quasi-paraboloid). This near-uniform field has a large variation of phase, dependent upon reflector size. This variation is "corrected" by the quasi-paraboloid so that a uniform phase results across the final planar aperture of the quasi-paraboloid. In the true cassegrain antenna (the paraboloid/hyperboloid), this phase variation does not occur since geometrical path lengths are all equal, which is the fundamental cassegrain principle. The JPL efficiency calculation program is based upon the illumination of a paraboloid, so that exact uniform phase would yield a 100% phase efficiency. The normal phase variations that result from diffraction in the physical scattering result in a small reduction of this efficiency. If the scattered pattern from the quasi-hyperboloid is to be properly used in this efficiency calculation, then the correction of phase by the quasi-paraboloid must be included, without destroying the phase variation or ripple resulting from the physical optics.

The original shaping computer program included an output which determined these phase corrections for a scattered pattern. However, certain program assumptions made were not accurate enough for the large systems of this study and so this correction could not be used. Therefore, the true theory was determined without assumptions and an absolutely accurate program was prepared; the illumination patterns may now be properly evaluated.

2.4 An extensive study of shaping, using the various programs mentioned above, has been made. All samples were of an 100 meter system at X-band and S-band. Various sizes of the large dual band X-S horns were used in the study and applied in systems with a range of appropriate main reflector F/D ratios. Only the microwave optics efficiencies are considered; dissipation losses, surface accuracy and feed support blockage

as mentioned are not included in the study. Results will be tabulated in this report.

In general, central blockage efficiency can be made higher than 99% for the X-band cases by using the shaping synthesis with an axial null in the final illumination. Efficiencies are a bit less at S-band, going to 98.5%. Overall efficiencies of 96% are available at X-band, but with poorer rear spillover (hence noise) at S-band. When considering both bands, some compromise must be made and a typically good result would be 94% at X-band with rear spillover noise of only 0.15 K, and on the same antenna an S-band efficiency of 92% with rear spillover noise of 3.0K.

3.0 THE PROGRAM AND TEST CASES

The following sections will discuss the work performed in designing various high efficiency 100 meter dual reflector systems. The shaping program will be described and modifications to it which were necessary for this study of very large apertures. This will then be followed by a discussion of a new computer program used to alter phase, a description of feed horns, and samples of near-final designs.

3.1 The Dual Reflector Shaping Program*

The JPL dual reflector antenna shaping program is the result of work done prior to 1965. (1,2). The geometry of the problem is illustrated in figure 3-0. The main reflector shape is defined in the cartesian system (x,y), and the subreflector shape is described in the polar system (r, θ). The geometry is axisymmetric about the optical axis y. The theory is purely geometrical optics (ray tracing).

Conceptually the working of the program (SHAPER) is as follows:

1. An axisymmetric feed horn pattern is determined and an axial phase center location chosen. The feed pattern is internally represented by piecewise linear interpolation tables in θ both for intensity, $F(\theta)$ and relative phase, $\phi(\theta)$.

2. An outer radius, x_{max}, is chosen for the main reflector and the reflector outer edge is positioned at $x = x_{max}$, $y(x_{max}) = 0$. An innter (termination) radius, $x_{min} \geqslant 0$, is also chosen.

3. A corresponding outer radius and location for the subreflector are also chosen, $r(x_{max})$ and $\theta(x_{max})$.

---

*This section and section 3.2 are a result of efforts by L.D. Howard, Programming Consultant to JPL SEC. 333. Mr. Howard is presently a member of JPL Section 366.

4. The starting conditions are now defined and the problem solution may proceed. The shape of both reflectors will be determined provided we take x as an independent variable and can write down equations for the three remaining variables y, r, θ as functions of x. For instance,

$$\text{(1a)} \quad y(x) = -\int_{x_{max}}^{x} \left(\frac{dy}{dx}\right) dx + y(x_{max}) \qquad x_{max} \geqslant x \geqslant x_{min}$$

$$\text{(1b)} \quad r(x) = -\int_{x_{max}}^{x} \left(\frac{dr}{dx}\right) dx + r(x_{max}) \qquad x_{max} \geqslant x \geqslant x_{min}$$

$$\text{(1c)} \quad \theta(x) = -\int_{x_{max}}^{x} \left(\frac{d\theta}{dx}\right) dx + \theta(x_{max}) \qquad x_{max} \geqslant x \geqslant x_{min}$$

To determine the three unknown derivatives there must be auxiliary conditions (constraints). Refer again to figure 3-0, and note the typical ray shown finally impinging on the x axis at radius x. The first condition is that the angle of incidence with the x axis may be chosen as a function of x; it is made always perpendicular, thus giving a beam parallel to the y axis.

The second condition is that the length of the ray shown may be chosen as a function of x; the choice is that all internal rays have the same length as the peripheral ray passing thru $(r(x_{max}), \theta(x_{max}))$, $(x_{max}, y = 0)$. Since all path lengths across the aperture are equal the system introduces no phase distortion (at any frequency).

The third condition is that the beam intensity may be chosen as a function of x across the aperture. Beam intensity is chosen constant to produce uniform illumination, a condition for optimal antenna efficiency.

The detailed derivation of equations 3-0 subject to these constraints was given by Williams [1] in 1965. The original JPL SHAPER program did a direct solution of these coupled equations by numerical integration. Large antenna design resulted in several modifications to this approach.

Modifications to SHAPER

The total beam intensity is proportional to

$$(2a)\quad C_2 \int_{x_{min}}^{x_{max}} x\,dx = \int_{0}^{\theta(x_{max})} F(\theta)\sin\theta\,d\theta$$

thus

$$(2b)\quad C_2 = \frac{2}{x^2_{max} - x^2_{min}} \int_{0}^{\theta} F(\theta)\sin\theta\,d\theta$$

and

$$(2c)\quad C_2 x\,dx = F(\theta)\sin\theta\,d\theta$$

or

$$(2d)\quad \frac{d\theta}{dx} = \frac{C_2 x}{F(\theta)\sin\theta}$$

and finally we note that $\theta(x)$ may be determined from the integral equation

$$(2e)\quad \int_{0}^{\theta} F(\theta)\sin\theta\,d\theta = C_2 \int_{x_{min}}^{x} x\,dx = \frac{C_2(x^2 - x^2_{min})}{2}$$

Most of the problems found in the original program were related to the above equations (2). C_2 is a very important constant since it determines the correspondence between θ and x (2d and 2e). In the old program, equation (2d) was numerically integrated by the trapezoidal rule, with up to 1% error possible. The resulting problem was that the integration of equations (1) would "use up" intensity at the wrong rate, and as the solution neared the y axis the solution would "blow up". In addition equation (2d) is not suitable for integration near the axis ($x \to o$, $\theta \to o$ gives $d\theta/dx \to o/o$). Very small errors in x and θ near the axis can cause $d\theta/dx$ to be undefined (e.g. anywhere between ∞ and o).

The old program "solved" these problems by stopping the integration early (before it blew up) and then extrapolating the solution inwards. This patching did not show up on small or medium size antennas because it seldom involved a region of more than a square wavelength (at the center) and thus was masked in scattering studies. On large antennas the "patched" region was many wavelengths in extent and showed up as distinct axial anomaly in the scattered field patterns.

In the new version of the program the integral (2b) is done analytically which gives an accurate value for C_2. In addition $\theta(x)$ is no longer determined by integration of (2d) but rather from relation (2e). This change not only improves the accuracy of $\theta(x)$ but also of y(x) and r(x) since the number of coupled differential equations to be integrated (1) is reduced from 3 to 2. Lastly, the numerical integrator was replaced with a more accurate and efficient version in the JPL Library.

The accuracy of the resulting shapes is now felt to be on the order of the cumulative rounding error of the 1108, which for the large antenna problems would be $\leq 10^{-3}$ inches. A definitive test of accuracy would be to rewrite the whole program in double precision, or to run on a longer word length machine (i.e. CDC 6600). To date this has not been done.

3.2 A New Program Feature

In the previous two sections we have made explicit mention of a lower limit to the main reflector radius, x_{min}. This is the point at which a ray passing along the y axis from the horn, to $(\theta(x_{min}) = o, r(x_{min}))$ on the subreflector, would strike the main dish. In Williams' original paper [1] and the old version of the program it was assumed that x_{min} would always be zero.

During the rewrite of the program it became obvious that the only requirement on x_{min} was $0 \leq x_{min} \leq x_{max}$. Non-zero x_{min}'s produce a uniform illumination just as before but only for x in the range $x_{min} \leq x \leq x_{max}$. For x in the range $o \leq x \leq x_{min}$ there is a pure geometric shadow. Diffraction effects modify this somewhat, but this new design variable has proved very useful, as this paper will illustrate. The complete listing of this new shaping program is given in Appendix A.

3.3 Phase adjustment for efficiency calculation

The scattered pattern from a typical shaped subreflector (quasi-hyperboloid) has a monotonically changing phase value, as opposed to the uniform phase obtained with the scattered pattern from a cassegrain hyperboloid. This changing phase is then altered, or "corrected," by the primary reflector to obtain the required uniform phase front.

A JPL computer program is designed to calculate paraboloid antenna efficiency as functions of the illuminating pattern [4]. These efficiencies are (1) spillover efficiency, (2) illumination efficiency, (3) cross polarization efficiency, (4) blockage efficiency (5) mode efficiency, and (6) phase efficiency. For the paraboloid, a uniform phase is required for 100% phase efficiency since the parabola simply alters the incident spherical phase pattern to produce a uniform phased aperture. The small phase

variations resulting from the diffraction by the subreflector results in phase efficiencies slightly below 100%. In the case of the dual shaped reflector system, all the above efficiencies calculate the same when using the efficiency program except the phase efficiency. For this efficiency, a geometrical phase correction must be used to alter the incident pattern just as the quasi-paraboloid does, without altering the normal diffraction phase ripple. In this case then a proper phase efficiency is obtained using the standard JPL paraboloid efficiency program.

The original shaping program provided geometrical path lengths and phase values to perform this alteration for phase efficiency calculation. However, although this straight forward approach was sufficient for smaller systems, its approximations failed for the large 100 meter system. Therefore a new and more accurate program was prepared to make this correction.

3.3.1 The "Shaperphase" program

Figure 3-1 presents the geometry used to determine the new phase alteration. Referring to this figure, the scattered pattern of the feed at focus "F" from the quasi-hyperboloid has its phase center shifted to some quasi-focus, a selected point "A." The far field phase pattern calculated then exists on some spherical surface at radius R about point A. These phases are tabulated at angular positions, θ_j. For each θ_j, there are reflector coordinates x_j, y_j for point "j", and this point is adjacent to reflector coordinates N and NN on each side of "j.". These points, N and NN, each have angles defined, β_n and β_{nn}, which are the geometric directions of rays from the subreflector. These directions therefore represent the directional source of the phase data. The phase, ϕ_j, to be associated with the angle θ_j is not $\phi(\theta_j)$ but is instead $\phi(\beta_j)$. The procedure then is as follows: Determine the point x_j, y_j, and β_j by interpolation between the points N and NN. Also determine the point x', y' on the reference sphere.

Now the phase on the sphere $\phi(\beta_j)$, is interpolated between the two adjacent tabulated values of phase, $\phi(\beta_j+)$ and $\phi(\beta_j-)$. A radial correction is then applied to $\phi(\beta_j)$ by the length, ΔR (phase advance).

$$\Delta R = R - x_j/\text{Sin}\ \beta_j - Z_j\ \text{Cos}\ \beta_j$$

where Z_j has been determined:

$$Z_j = B + y_j - x_j/\tan\ \beta_j$$

A further length correction y_j (phase retarded) is then applied to bring the final phase to the planar region across the front of the primary reflector. Of course, all these distances are translated to wavelengths and phase angles.

A similar correction is made to the amplitude function, E at θ_j. This is not as significant since this function varies very slowly. Amplitudes are translated from the value tabulated, E at θ_j to the new value $E(\beta_j)$, again by interpolation between $E(\beta_j+)$ and $E(\beta_j-)$.

A program was prepared which obtained these values x_j, β_j and finally the phase alteration. This is used with the scattered field output which determines a slightly modified new amplitude output and a nearly uniform phase, but one which still carries the variations caused by diffraction. This can then be used directly in the efficiency program to determine the final antenna characteristics. This program is listed in Appendix B.

3.4 Results of Antenna Calculations.

Many sample problems were solved in determining the parameter ranges for the 100 meter antenna, and in modifying the shaping program and developing the new phase alteration program. The final results of these very many tests will be discussed.

3.4.1 The Feed Horns

All sample designs and calculations in this study were done for the dual frequency application, S-band (2.1 to 2.4 GHz) and X-band (7.1 to 8.5 GHz). For this application, a new dual band horn technique, (3)(5), was used to feed and then determine the S- and X-band performance of the 100m system. A horn of this type is being used in a new X-S feed horn development for use at DSS 13 and possibly other antennas. A photograph of the horn is shown in figure 3-2. Most of the shaping calculations were made using the X-band pattern; however two were made using the S-band pattern and will be discussed later.

Figure 3-3 presents the horn geometry. For corrugated horn performance (very low sidelobes, equal E and H plane patterns) the grooves must be from $\lambda\left(\frac{2N-1}{4}\right)$ to $\lambda\left(\frac{2N}{4}\right)$ deep, where N may assume any integer value. Groove input impedance is then capacitive and fields are forced away from the walls; wall currents are reduced.

As the aperture diameter becomes larger, the pattern beamwidth becomes independent of aperture size (and frequency) and is only a function of the flare angle, θ. This independence, or "beam saturation," occurs in the region when "Δ" becomes greater than about 0.75 (6). (See figure 3-3.) In this case we have at least two phase reversals across the horn aperture. As the aperture becomes larger, the number of phase reversals will increase and the general pattern texture will change, but not the approximate beamwidth or gain. The chart below illustrates this point.

				10 dB-Beamwidth		20 dB-Beamwidth	
θ	D	$\Delta(2.295)$	$\Delta(8.415)$	X-Band	S-Band	X-Band	S-Band
14°	67"	0.80	2.94	10.49°	10.19°	13.57°	15.64°

A 14° horn with 67 inch aperture (used in some following calculations) is just large enough at S-band, $\Delta = 0.80$, to reach saturation. The 10 dB

beamwidths are very similar while the 20 dB beamwidths are different, indicating different pattern texture. As the aperture is made much larger, Δ will become greater in S-band and patterns will more closely resemble each other, at -20 dB also. Figures 3-4 and 3-5 are the calculated patterns for this horn. It is apparent that as flare angle θ_o is reduced, the horns must become very large to achieve this beamwidth independence.

Dual band horns with flare angles from 9 degrees through 17 degrees were used in the shaping and efficiency calculations during this study.

3.4.2 100 Meter Dish Configurations

Success of special antenna shaping to achieve high overall efficiency depends upon obtaining high efficiency results for each of the various components that make up the final result. The first efficiency component that has a significant effect on the choice of configuration in the dual shaping approach is the forward spillover efficiency, η_{FS}. As the subreflector is enlarged to capture more of the main horn beam, forward spillover efficiency increases since less energy is allowed past this reflector. However, two factors are working against any attempt at capturing all energy between the first nulls for a near 100% efficiency in the case of the dual band horn. These are (1) extreme shaping required to hold the uniform illumination will result in radii of curvature unsuited to the geometric optics assumption and (2) horn phase patterns behave radically near these null regions; shaping programs are based on uniform horn phase and though a slight variation in phase can be ignored, larger ones may result in a poor final phase result.

The shaping program could (and once did) provide a shaping correcion to account for this rapid phase change near the null region. However, this has the disadvantage of limiting the shape to the one single horn at one frequency only. Other similar horns would have very restricted use. Therefore, throughout this study, an exactly uniform horn phase has been assumed.

A reasonable and practical choice for this spillover efficiency value based on calculation experience, and experiment, is about 99%. This is not to say that 99.5%, or even a bit more, is not reasonable but that 99% will give good overall results and allow one to define some configuration limits. A greater efficiency, 99.8% or so, would represent an extreme taper upon the subreflector edge and could lead to the shaping extremes unsuited to the geometrical optics approach.

Therefore a value, η_{fs}, of 99% will be chosen in order to define some configurations that will result from using a selection of dual X-S band horns. The 99% number will mean a taper of about 19 dB onto the subreflector edge when using this horn concept.

Figure 3-6 presents the general configuration of the special shaped antenna system. Note that "F/D" is defined directly by the dish depth and diameter; this is because the system does not have a definable focal position. Also note that for the dual band horn, the phase center is generally far back in the horn throat, in the vicinity of the horn vertex. The chart, figure 3-7, presents the calculations for configuration parameters when considering three choices of horn size, three approximate "F/D" values, and illumination tapers to provide a 99% forward spillover efficiency in the X-Band.

Figures 3-8 and 3-9 present much of this data in graph form. What one observes is that if a horn location near the vertex is desired, then the smaller flare angles (large horn) and smaller "F/D" values (a "deeper" main reflector) are required.

It must be emphasized that these values are only design guides. They depend entirely on the illumination angle "α" giving η_{FS} = 99%. When a slightly different subreflector/main reflector diameter ratio is chosen (0.1 was used here), then different parameters will result. However, for practical systems, the parameters will remain very near to those indicated by the graphs.

3.4.3 Some Samples of Shaping and Efficiency

As was mentioned above, many test cases were calculated for shaping, scattering, and efficiency for horn sizes from 17 degrees down to 9 degrees, using no central hole cutout to reduce blockage and using control hole cutouts that equaled subreflector size down to about 0.8 of subreflector size. The shaping was nearly always done using the X-band pattern (for optimum X-Band performance) and scattering of both X- and S-Band was calculated.

All results had much in common, with only slight variation. (1) Best X-Band efficiency would approach 96% with low rear spillover, less than 1.0 Kelvin; (2) generally the S-band performance would be poorer, in the region from 90% to 92%, with probably unacceptably higher rear spillover, about 6.0 to 8.0 Kelvin. The remainer of the report will deal with near final designs, using a 14 degree horn in an F/D $\sim$ 0.325 system and an 11 degree horn in an F/D $\sim$ 0.4 system.

The 14-Degree Horn at 14-Degree Taper, X-band Shaping

Figure 3-10 indicates the design dimensions when using the X-band horn pattern for the shaping calculations. The horn patterns of figure 3-4 and 3-5 are scattered from this shaped subreflector and the efficiencies are calculated. The taper at the edge of the subreflector is -21.54 dB in X-band and -16.67 in dB in S-band. Forward spillover is then 99.49% in X-band and 96.35% in S-band. Following are the results for the 100 meter antenna.

	f = 8.415 GHz	f = 2.295 GHz
η_{fs} (forward spillover)	0.99490	0.96345
η_s (rear spillover)	0.99830 (0.41 Kelvins)	0.97091 (6.98 Kelvins)
η_i (illumination)	0.98973	0.99223
η_{ph} (phase)	0.98410	0.99353
η_b (blockage)	0.99148	0.98627
η_x (cross-pol)	0.99980	0.99950
η total	0.95894	0.90903

and this typifies X-band shaping. Although efficiencies are probably acceptable in both bands, one would like to reduce the S-band rear spillover and hence the noise contribution. The scattered patterns are shown in figure 3-11 (a),(b),(c), and (d). These are fine illustrations of placing a null in the center of the illumination pattern. It can be seen that the X-band synthesis produces a deep distinct central null region. At S-band, it is not as effective, but still useful. Note in figure 3-10 that the angle θ_1 defines a reflector radius of 1931 inches (49.05m) which is in line with the subreflector edge. This is the maximum extent to which the shaping is carried. The reason: When the feeding pattern is scattered from the subreflector (physical optics) the angle of final maximum efficiency and also acceptably low rear spillover (for low noise) occurs beyond the value of θ_1, usually about 1 degree greater. For this reason, a slightly smaller reflector is chosen which, when increased in size to 100 meters, will be about right for acceptable rear spillover and nearly maximum overall efficiency.

The technique for defining the coordinates of the outer 1 meter of radius has not been developed as yet. It is assumed that this can be done without causing any additional phase error in the final illumination pattern, i.e. holding phase efficiency to its value at θ_1.

At this point, it occurs to do the shaping synthesis at S-band to improve S-band spillover, and observe the final results on X-band.

The 14-Degree Horn at 14-Degree Taper, S-band Shaping

The feed chosen for this S-band shaping is the one just discussed; one simply uses the S-band radiation pattern as input to the shaping program. Since the 14 degree edge taper is only -16.67 dB at S-band, the "sharpness" of shaping, or variation from the hyperboloid should be different. Edge illumination remains, of course, the same in X-band as in the example above and forward spillover will remain unchanged.

Figure 3-12 indicates the design configuration for the 14 degree horn using its S-band pattern for the shaping calculations. The same horn patterns (figures 3-4 and 3-5) are now scattered from this slightly different shape and the resulting efficiencies are calculated. The following results for the 100m antenna:

	f = 8.415 GHz	f = 2.295 GHz
η_{fs} (forward spillover)	0.99490	0.96345
η_s (rear spillover)	0.99939 (0.15 Kelvins)	0.98658 (3.22 Kelvins)
η_i (illumination)	0.96987	0.99025
η_{ph} (phase)	0.99311	0.99356
η_b (blockage)	0.99264	0.99068
η_x (cross-pol)	0.99980	0.99950
η_t (total)	0.95045	0.92601

These are to be compared to the figures above. X-band efficiency has been decreased by about 1%; S-band efficiency is increased by more than 1% and S-band rear spillover (noise) is significantly reduced. The cause of X-band reduction is seen in the fall off of illumination efficiency, as expected.

The scattered patterns for this example are shown in figure 3-13 (a), (b) (c), and (d).

By looking at these patterns at slightly greater angles (or changing geometry a trifle) different efficiencies can be obtained so that one may "optimize" the trade-off beween X- and S-band, depending upon requirements. For instance, at 74 degrees on the illumination patterns, (a 102.2 meter antenna) the following efficiencies result: (remembering that a technique has not yet been developed which permits the calculation of coordinates for the larger dishes, beyond θ_1).

	f = 8.415 GHz	f = 2.295 GHz
η_{fs} (forward spillover)	0.99490	0.96345
η_s (rear spillover)	0.99975 (0.06 Kelvins)	0.99402 (1.44 Kelvins)
η_i (illumination)	0.94172	0.97952
η_{ph} (phase)	0.99311	0.99356
η_b (blockage)	0.99264	0.99070
η_x (cross-pol)	0.99980	0.99950
η (TOTAL)	0.92320	0.92290

The X-band efficiency has reduced by about 3% while S-band remains about the same. The reason; the X-band illumination is reducing rapidly and the reduction in S-band illumination is nearly compensated by S-band rear spillover improvement. Note the S-band noise is becoming acceptably low. Carrying this approach farther is futile. Although S-band noise does continue to reduce, the falloff in overall efficiency increases rapidly to unacceptable levels.

The 11-deg. horn at 11 deg taper, S-band shaping

One further problem was solved to see if a gross change in F/D ratio would alter these general results of S-band spillover. Therefore, an 11 degree horn at 11 degree taper in a shallow dish, F/D $\sim$ 0.4 was investigated. Such a configuration results in a feed focal point that is about the same distance from dish vertex as the previous two examples (see figure 3-14).

S-band taper is now -16.54 dB and X-band taper is -21.57 dB. Forward spillover becomes 99.46% at X-band and 96.09% at S-band. Following are the efficiency results at 100 meters, to compare directly to the 100m, 14 deg. problem.

	f = 8.415 GHz	f = 2.295 GHz
η_{fs} (forward spillover)	0.99457	0.96093
η_s (rear spillover)	0.99913 (0.21 Kelvins)	0.98631 (3.29 Kelvins)
η_i (illumination)	0.96795	0.98956
η_{ph} (phase)	0.99122	0.99058
η_b (blockage)	0.99106	0.98582
η_x (cross + pol)	0.99980	0.99950
η (TOTAL)	0.94470	0.91541

and the results are not significantly different from the above case of the 14 deg horn with 3.22K rear spillover in S-band. These patterns are shown in 3-15 (a), (b), (c), and (d).

3.5 A Larger Horn

The above results were obtained by using a dual band horn that barely qualifies, i.e., " Δ" is approximately 0.8 (see section 3.4.1, figure 3-3). As "Δ" is made larger at S-band, the horn pattern at S-band will change rapidly and approach the X-band pattern for the larger horns. Although the X-band pattern will also slowly change, final results will become closer as "Δ" becomes large.

Figure 3-16 presents this 14 degree horn pattern as the aperture enlarges to 120 inches, and Δ becomes 1.43. This is to be compared to figure 3-5, the 67 inch aperture, Δ = 0.80. The pattern has "squared up" and becomes comparable to the X-band pattern, figure 3-4. A new shaped surface is calculated based on this new S-band pattern. Figure 3-17

presents the design configuration for this larger horn in the dual shaped system. The horn would be approximately 10 ft. in diameter by 20 ft. long. The practicality of this even in the context of a 100 meter antenna, cost effectiveness notwithstanding, is questionable, but instructive to study.

The S-band taper of this larger horn is now -18.32 dB at 14 degrees instead of -16.67 dB as above showing the change in beam detail. The forward spillover (η_{fs}, the energy within ±14° of boresight) has become 98.5% as opposed to 96.35% for the smaller horn.

When scattered from these new shaped surfaces, the larger horn has the following results:

	f = 8.415 GHz	f = 2.295 GHz
η_{fs} (forward spillover)	0.99490	0.98488
η_s (rear spillover)	0.99936 (0.15 Kelvins)	0.98798 (2.88 Kelvins)
η_i (illumination)	0.98189	0.99275
η_{ph} (phase)	0.98750	0.98360
η_b (blockage)	0.99122	0.98773
η_x (cross-pol.)	0.99980	0.99980
η (TOTAL)	0.95540	0.93830

This has had the effect of increasing X-band efficiency by 0.5% and S-band by 1%, while decreasing S-band noise by about 0.5K. For this case, if one expands the illumination angle a bit, to 73.5 degrees, S-band rear spillover noise will further reduce to 1.67K with X- and S-band efficiency both at about 94%. S-band rear spillover is reduced further by going on to a 74 degree illumination angle. For this case, the noise is less than 1.0K (0.95) with 93.4% and 92.5% overall at S- and X-band respectively. These scatter patterns are depicted in figure 3-18 (a), (b), (c) and (d).

The results of section 3.4.3 are summarized in Table 3-1. These horns will each have its phase center about 45 feet (13 to 14 meters) from the main reflector vertex. The 14° horns are used in small F/D reflectors $\sim$ 0.325, while the 11 degree horn is suggested for the more conventional reflector, F/D $\sim$ 0.4.

Type of Shaping	Desired Condition & θ	Total Eff X-Band	Rear Spillover Noise, X-Band	Total Eff S-Band	Rear Spillover Noise, S-Band
14° Horn 67" Aperture X-Band Pattern for Shaping	Max. Efficiency, X-Band, θ = 73°	95.9%	0.41K	90.9%	6.98K
	Max. Efficiency, S-Band, θ = 74.5°	92%	0.05K	92.3%	1.62K
14° Horn 67" Aperture S-Band Pattern for Shaping	Max. Efficiency, X-Band, θ = 72°	96.1%	1.26K	91.3%	7.36K
	Max. Efficiency, S-Band, θ = 73°	95%	0.15K	92.6%	3.22K
	Lower Noise S-Band, θ = 74°	92.2%	0.06K	92.3%	1.44K
11° Horn 82" Aperture S-Band Pattern for Shaping	Max. Efficiency X-Band, θ = 60.5°	95.8%	1.2K	90.6%	7.42K
	Max. Efficiency S-Band, θ = 61.3°	94.5%	0.21K	91.5%	3.29K
	Lower Noise S-Band, θ = 62.5°	91.4%	0.06K	91.4%	1.4K
14° Horn 120" Aperture S-Band Pattern for Shaping	Max. Efficiency X-Band, θ = 72.3°	96.4%	0.71K	93.4%	4.8K
	Max. Efficiency S-Band, θ = 73°	95.5%	0.15K	93.8%	2.88K
	Lower Noise S-Band, θ = 73.5°	94%	0.07K	94%	1.67K

Table 3-1. Summary of Results

4.0 CONCLUSIONS

The large dual frequency band corrugated horn patterns have been used to calculate shaping coordinates for 100 meter antennas at maximum efficiency (uniform illumination). The horn patterns were then scattered from the shaped quasi-hyperboloid and efficiencies as well as zenith rear spillover noise were calculated.

The shaping determination also included a type of "vertex plate" which scattered the energy away from the central subreflector shadow region. This is done without adding phase error to the final illumination pattern.

The results indicate that highly efficient shapes are available at both bands of the X-S band system, generally with X-band being the most efficient. This is because the S-band horn pattern shape results in more forward spillover, the lower S-band frequency results in more rear spillover because reflector size is smaller (in wavelengths) and for the same reason blockage efficiency is a fraction of a percent smaller.

Overall efficiencies in excess of 92% are possible in both bands with the smallest possible dual band horn, i.e., one that can be said to be truly gain limited. This is with a rear spillover noise of about 1.5K at S-band and less than 0.1K at X-band. In one example of using a much larger horn, overall efficiencies reached 94% at X-band and 93.8% at S-band with about the same noise.

The dual band horn is well suited to use in a shaped reflector system. In general, a trade-off would be needed between horn size and allowable low frequency (S-band) degradation to determine a final design.

Some further work should be done in this program, as follows:

1. Coordinates of the outer region of the quasi-paraboloid need to be more accurately determined. These are beyond the angle θ in the various configuration figures. The phase of the scattered field here is erratic and must be studied to determine the proper approach to determining this extension.
2. The effect of symmetrical "warping" of the quasi-paraboloid must be studied. This "warping" is a result of quasi-homologous deflection design envisioned for a 100 meter X-band instrument. For the large antenna, at various elevation angles, the carefully designed shaped system will assume certain variations in shape. This effect, and the effect of re-setting the shaped subreflector for maximum gain must be evaluated to ascertain if the principles of high efficiency will not be significantly degraded.
3. Final tradeoffs of allowable S-band performance degradation as well as structural layout tradeoffs, particularly large microwave horn size and fabrication, its interaction on position above main reflector vertex, and main reflector "deepness" must be optimized between microwave and structural performance and associated costs. This has not been done, and is necessary to fully define a final design. For example, the typically "flat" main reflectors preferred in the DSN application result in the feeds being rather far above the main reflector vertex. For a 100 meter diameter antenna, a significant feed cone support structure results. Deepening the main reflector alleviates this significantly. The use of well-performing, but large "gain limited" dual band horns aggravates this situation.

REFERENCES

1. "High Efficiency Antenna Reflector", W.F. Williams, Microwave Journal, pp. 79-82, July 1965.
2. "Dual Reflector Antenna System Design Program", P. Jarvie, R. Gerritsen, TR-66-700-13-2 J.P.L., Volumes 1 and 2, October 1966.
3. "A Prototype DSN X-S Band Feed: DSS 13 First Application Status", W.F. Williams, DSN Progress Report 42-44, pp 98-103, Jan. - Feb., 1978.
4. "Antenna Feed Efficiency", A. Ludwig, JPL Technical Report TR-32-979, pp. 69-71, April 1967.
5. "Multi-Frequency Band Corrugated Conical Horn Antenna" E.J. Jeuken and V.J. Vokurka, Proceedings of the 1973 European Microwave Conference, Sept. 1973.
6. "Design of Corrugated Conical Horns" Bruce Mac A. Thomas, IEEE Transactions on Antennas and Propagation, pp. 367-372, March 1978.

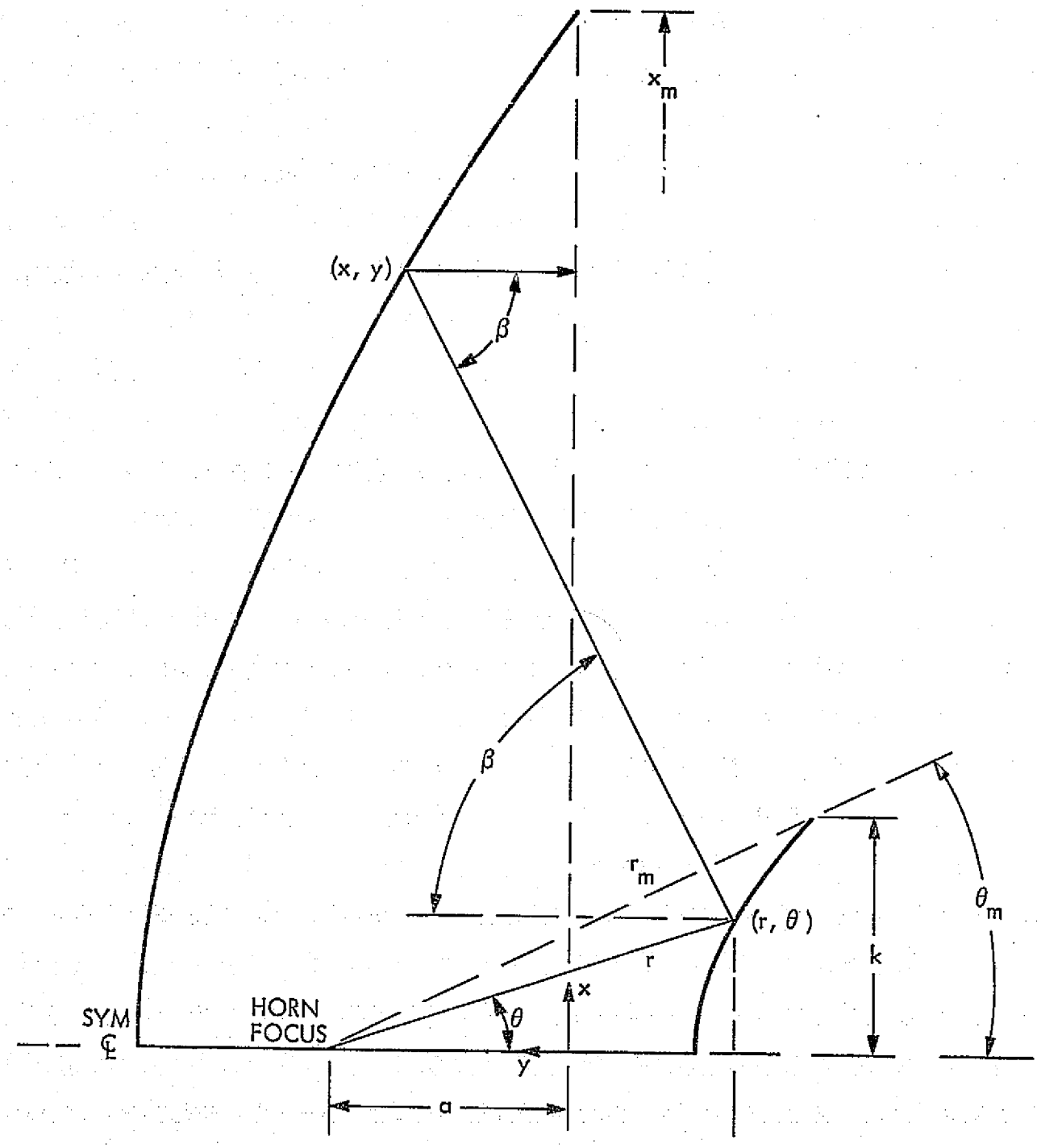

Figure 3-0. The Coordinate System for Shaping

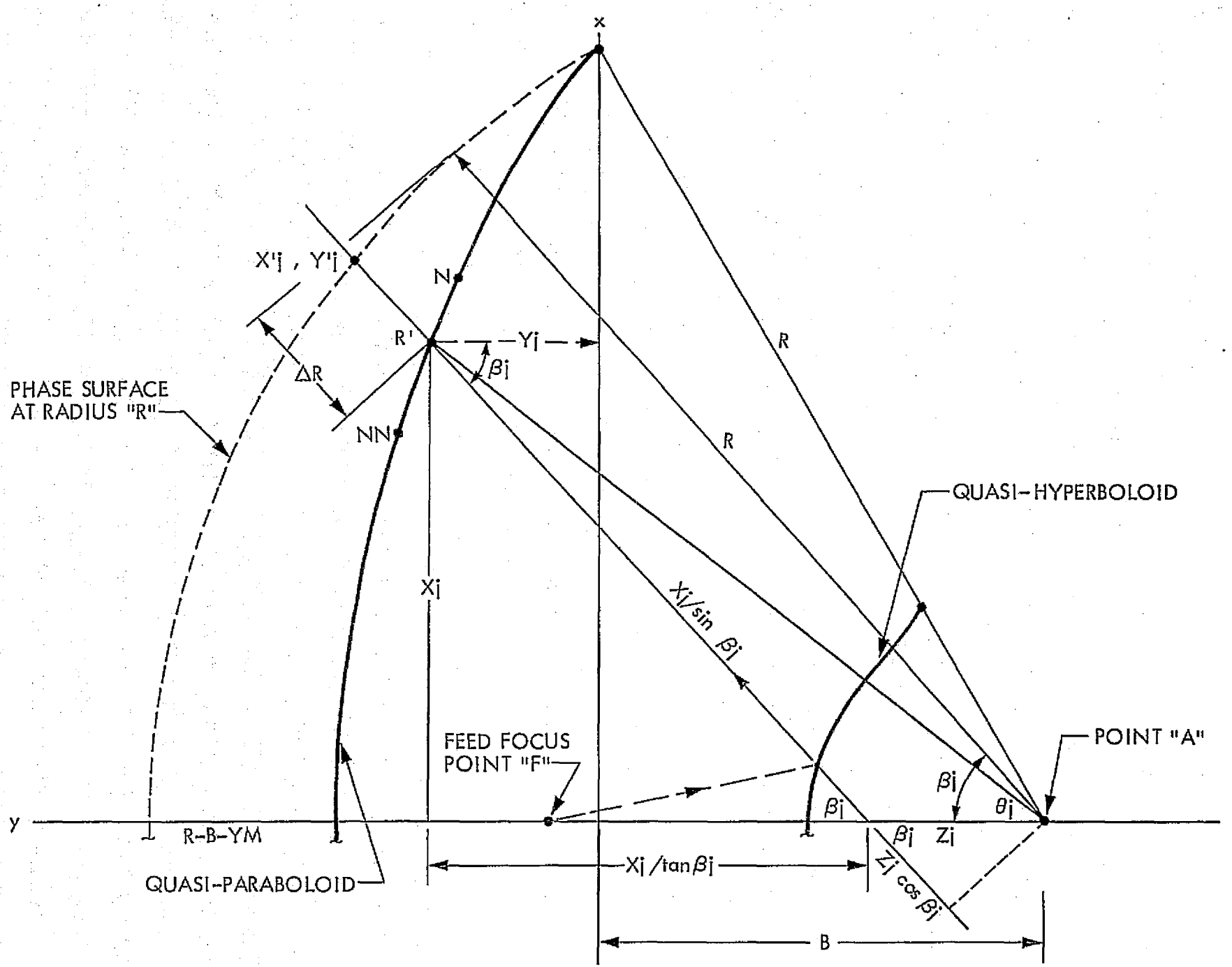

Figure 3-1. Geometry for Phase Alteration

ORIGINAL PAGE IS
OF POOR QUALITY

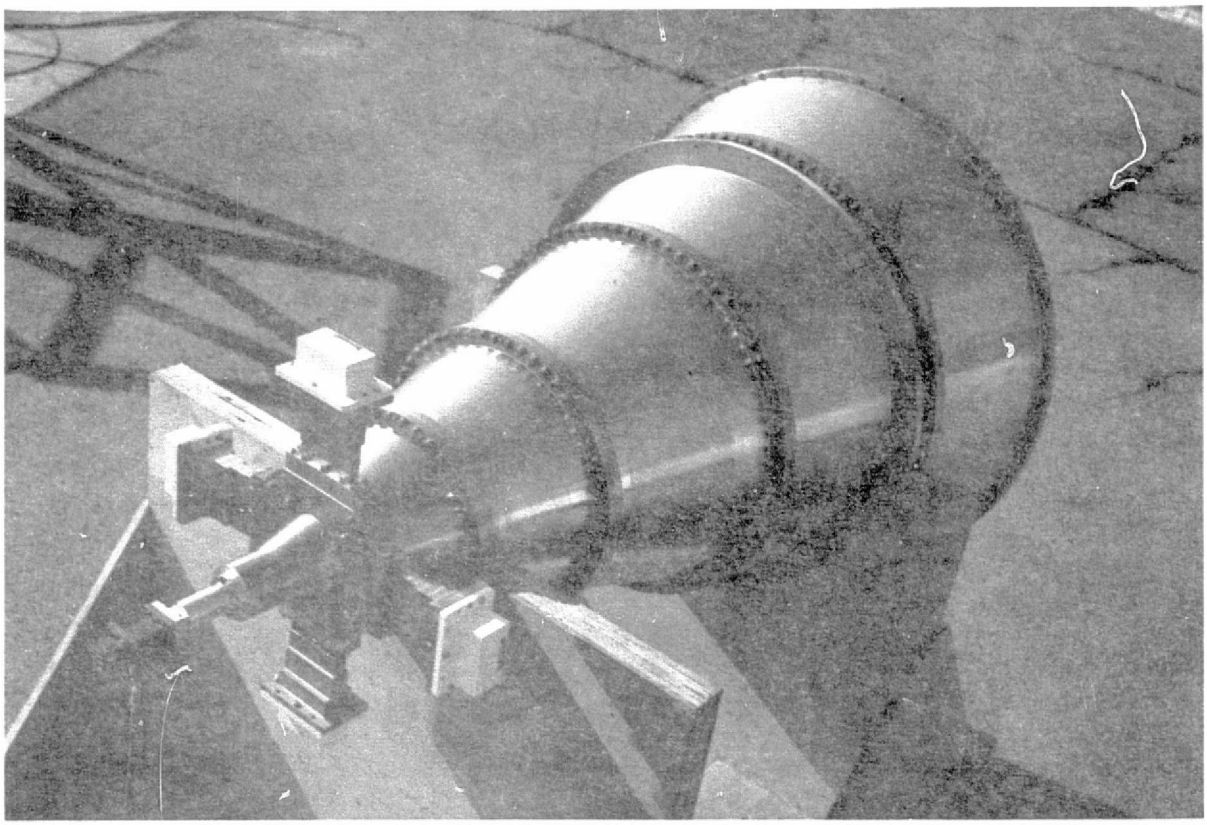

Figure 3-2. The Full Scale Horn

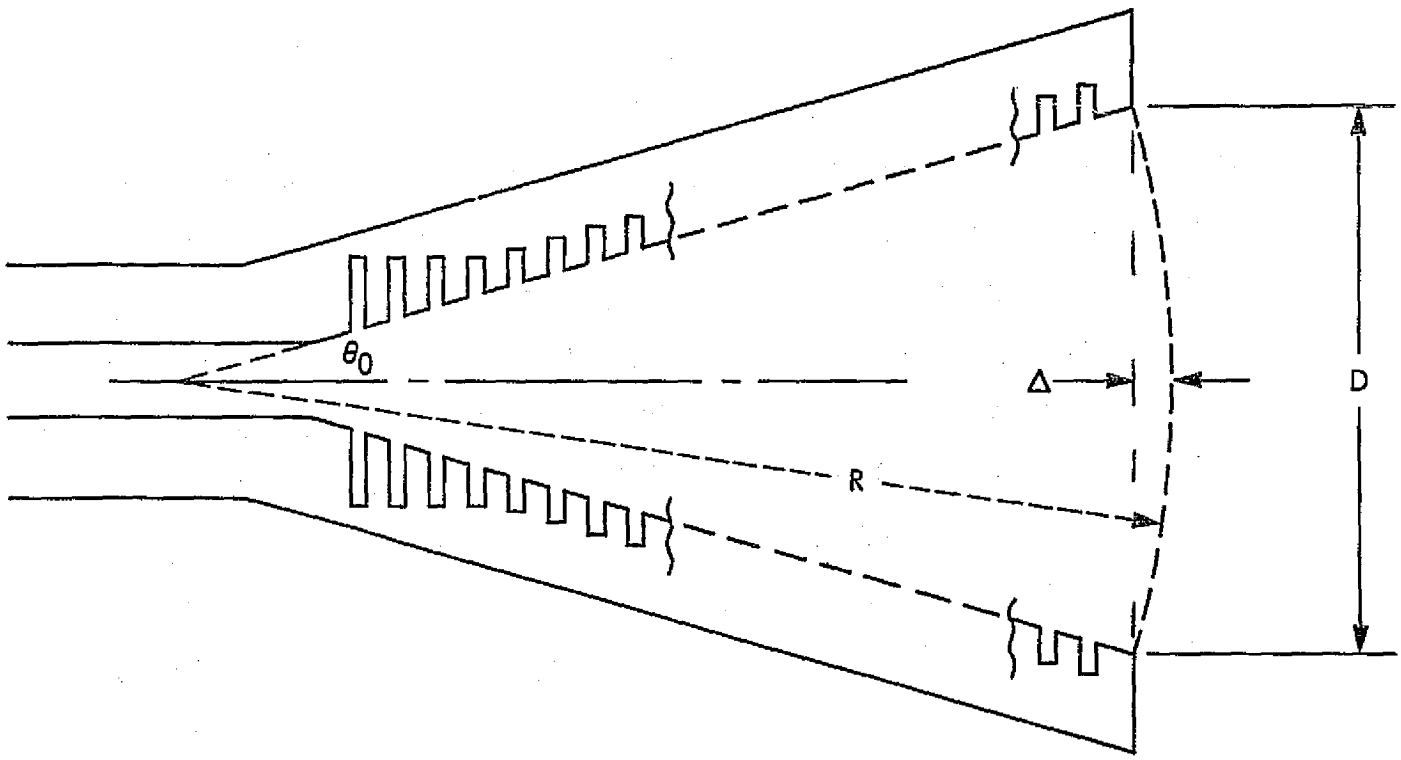

$\Delta = D/2\lambda_0 \, (\tan \theta_0/2)$

$\Delta > 0.75$ FOR SATURATION OR GAIN LIMITED

Figure 3-3. Corrugated Horn Geometry

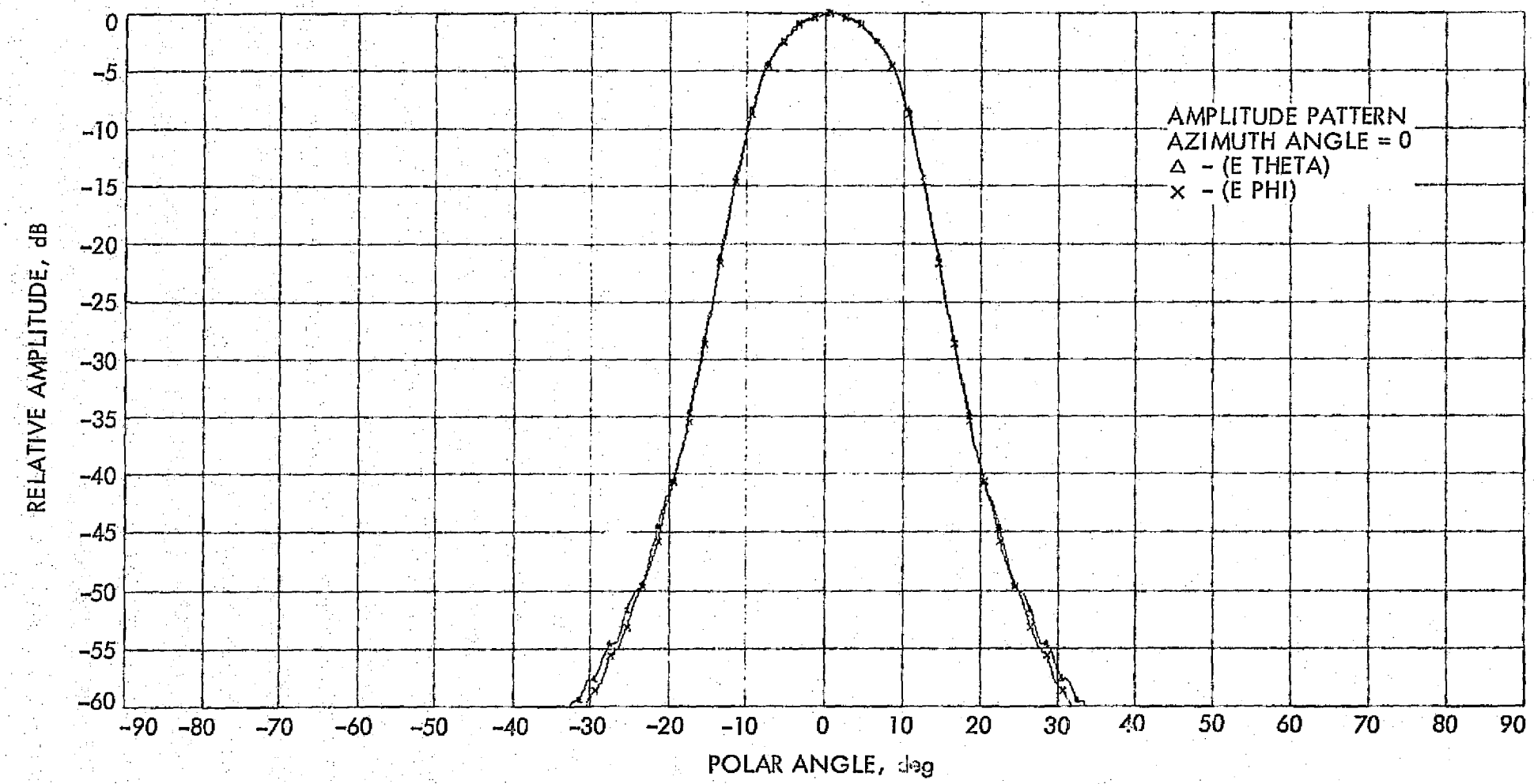

Figure 3-4. The 14 deg Horn, 67 in. Aperture, 2.005 Grooves, 8.415 GHz

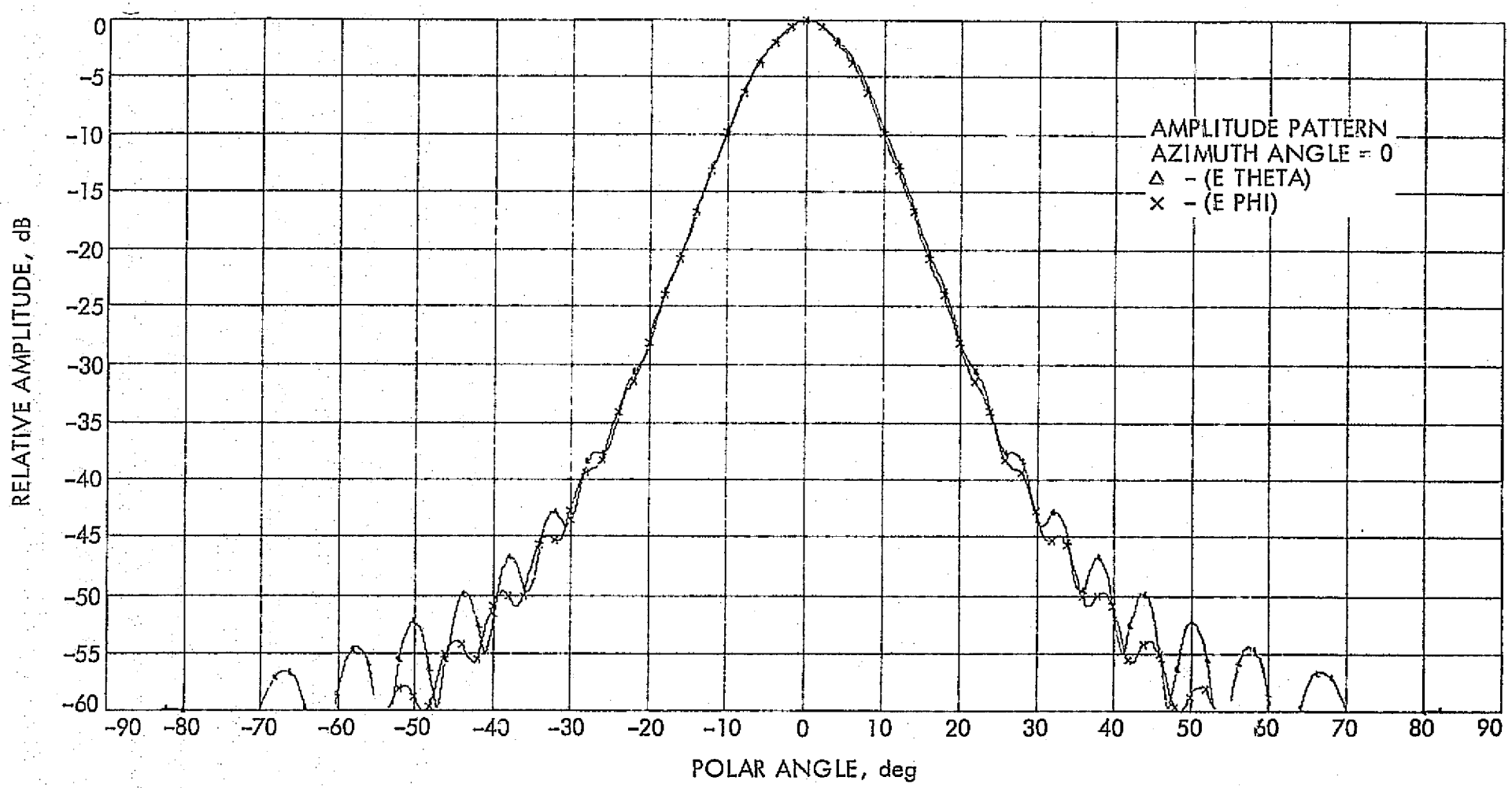

Figure 3-5. The 14 deg Horn, 67 in. Aperture, 2.295 GHz, Phase Center of X-Band (141 inches behind aperture)

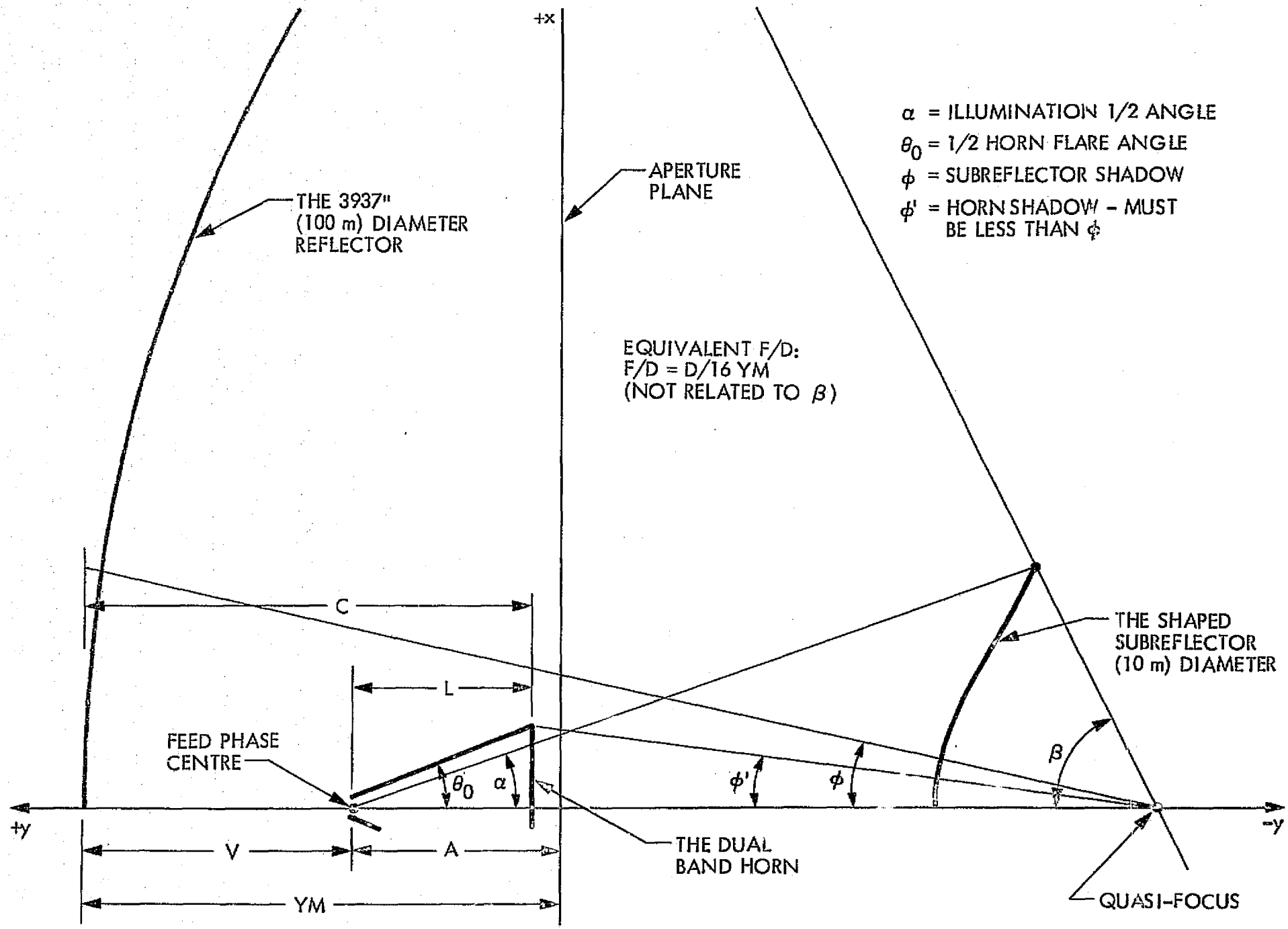

Figure 3-6. General Configuration for Shaped Antenna

THE 3937 INCH REFLECTOR (100 METERS)

The Horn Size	17.1° Horn	17.1° Horn	17.1° Horn	13° Horn	13° Horn	13° Horn	10° Horn	10° Horn	10° Horn
Aperture (in)	52	52	52	68	68	68	80	80	80
Length L (in)	83	83	83	145	145	145	223	223	223
α (deg)	16.2	16.2	16.2	12.4	12.4	12.4	9.66	9.66	9.66
Taper (dB)	18.9	18.9	18.9	19.3	19.3	19.3	19.3	19.3	19.3
A(in)	281.2	-5.0	-265.9	497.3	211.2	-49.6	756.6	470.5	209.7
YM (in)	817.76	701	613.4	817.69	701	613.3	817.65	701	613.3
V=YM-A (in)	536.6	706	879.3	320.4	489.7	662.9	61.05	230.4	403.6
EQUIV F/D = D/16YM	0.301	0.351	0.401	0.301	0.351	0.401	0.301	0.351	0.401
C=V+L (inches)	620	789	962	465	634.7	808	284	453.4	626.6
Approx Focal Length, inches	1258.5	1459.4	1661.7	1259.5	1461.1	1672.3	1261.6	1463.1	1665.3
β degrees Not F/D related	77.38	68.93	61.96	77.35	68.89	61.93	77.29	68.83	61.88
ϕ (deg)	8.89	7.68	6.76	8.88	7.67	6.71	8.87	7.66	6.74
ϕ' (deg)	2.33	2.22	2.13	2.45	2.36	2.25	2.34	2.27	2.21

Figure 3-7. Configuration Calculations

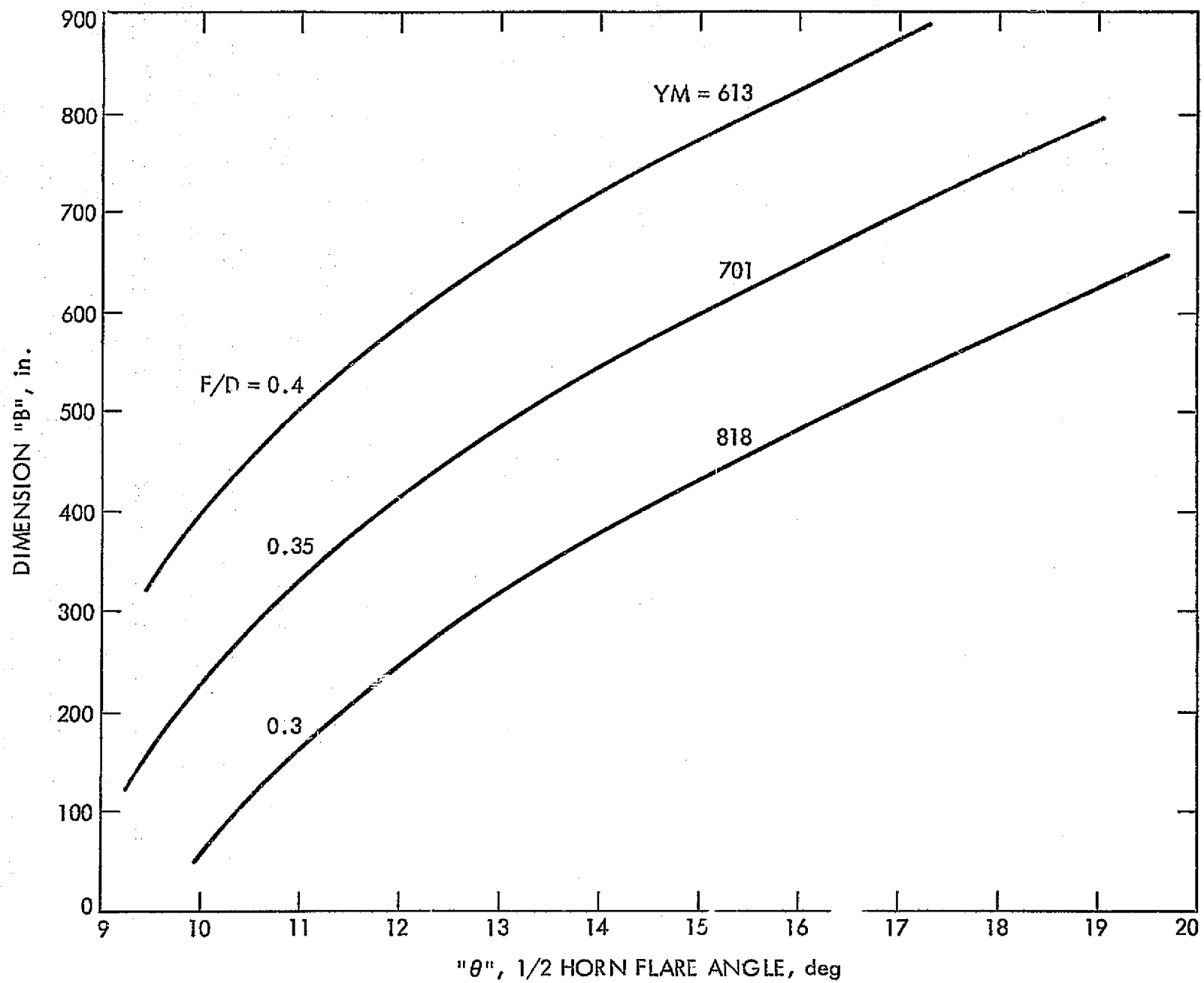

Figure 3-8. Vertex to Horn Phase Center Clearence for Various Horns and F/D

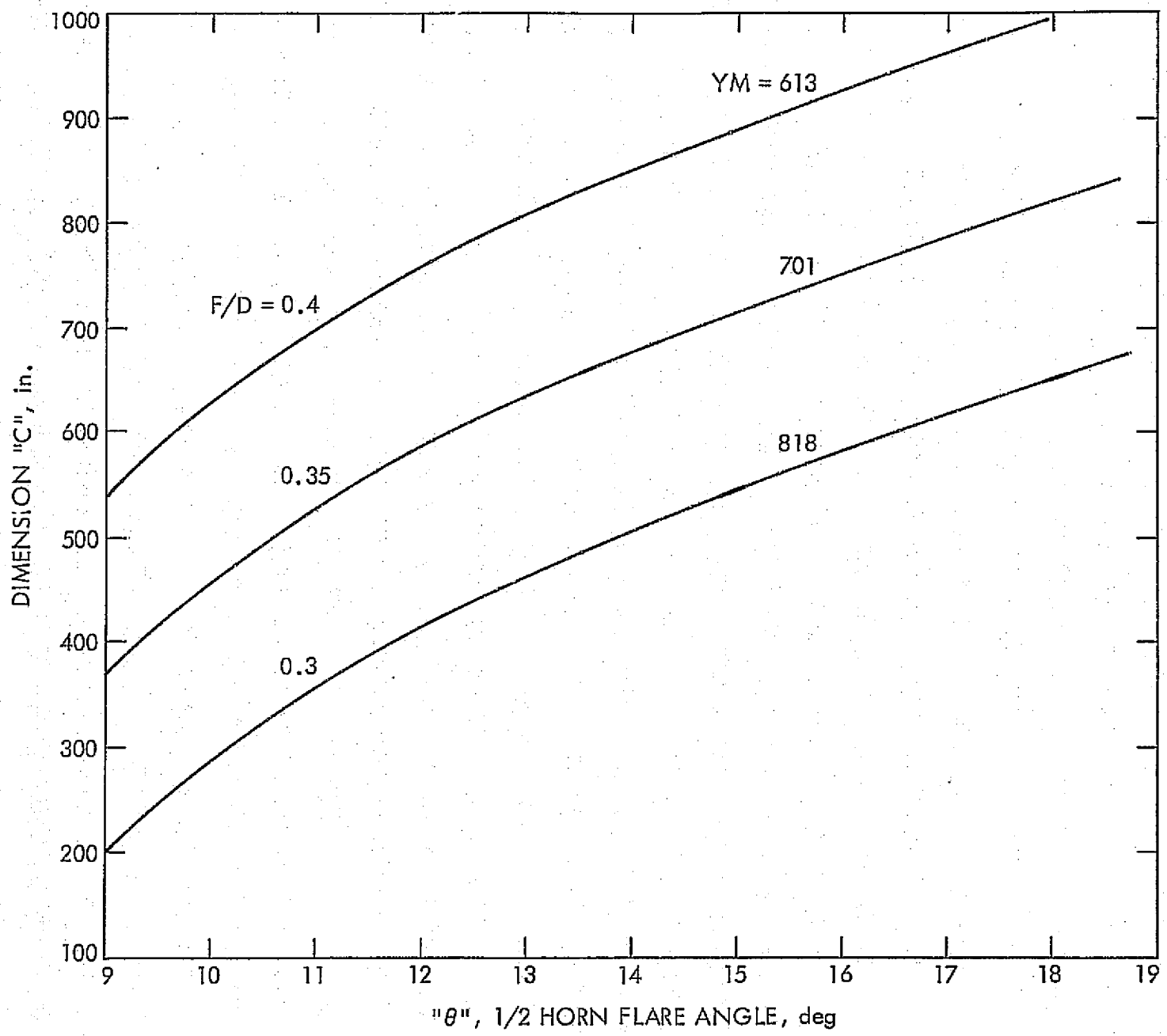

Figure 3-9. Clearance to Top of Horn

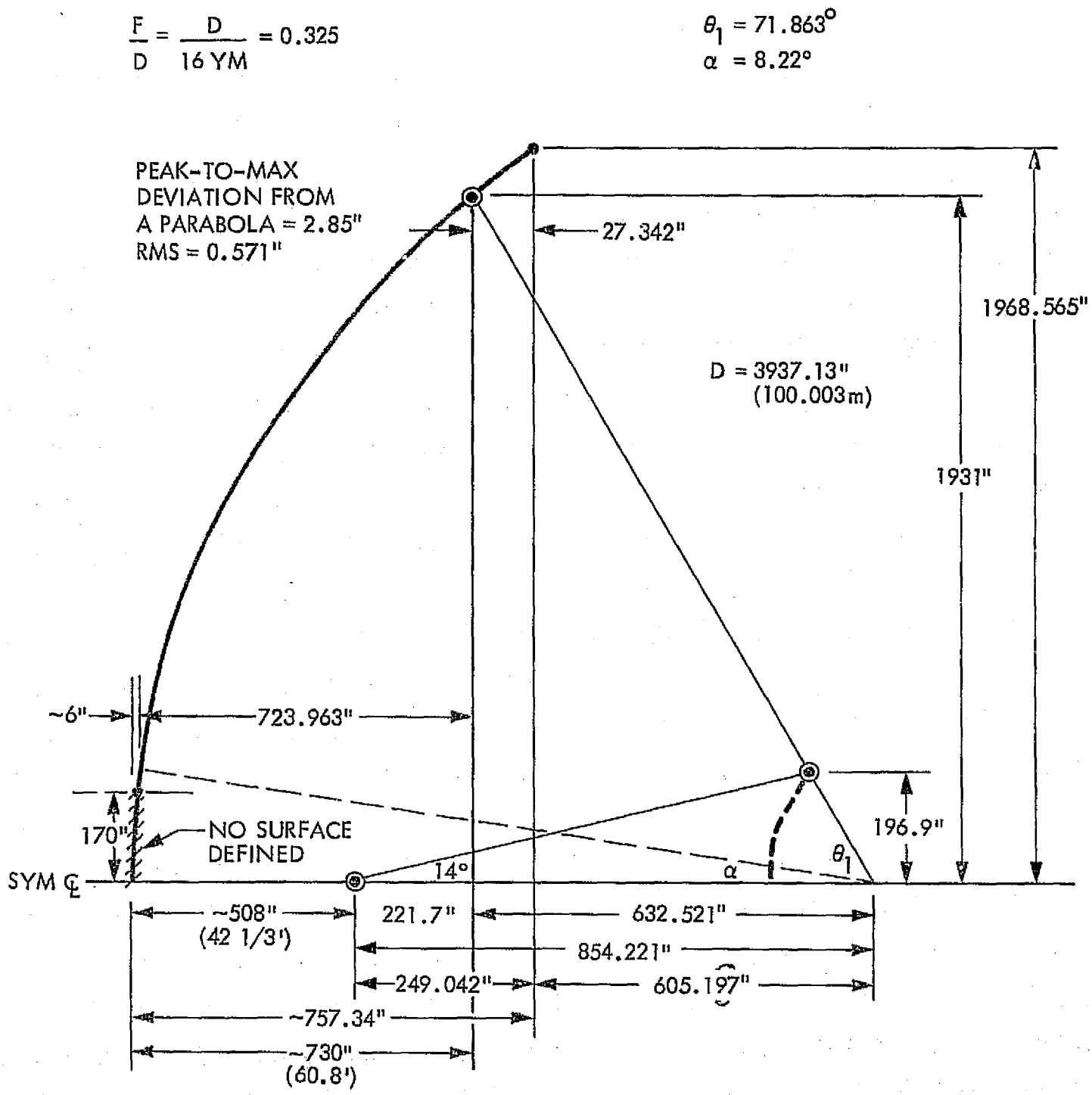

Figure 3-10. A "Best Fit" Solution Using a 14° Horn, 14° Taper, Shaped to X-Band Pattern

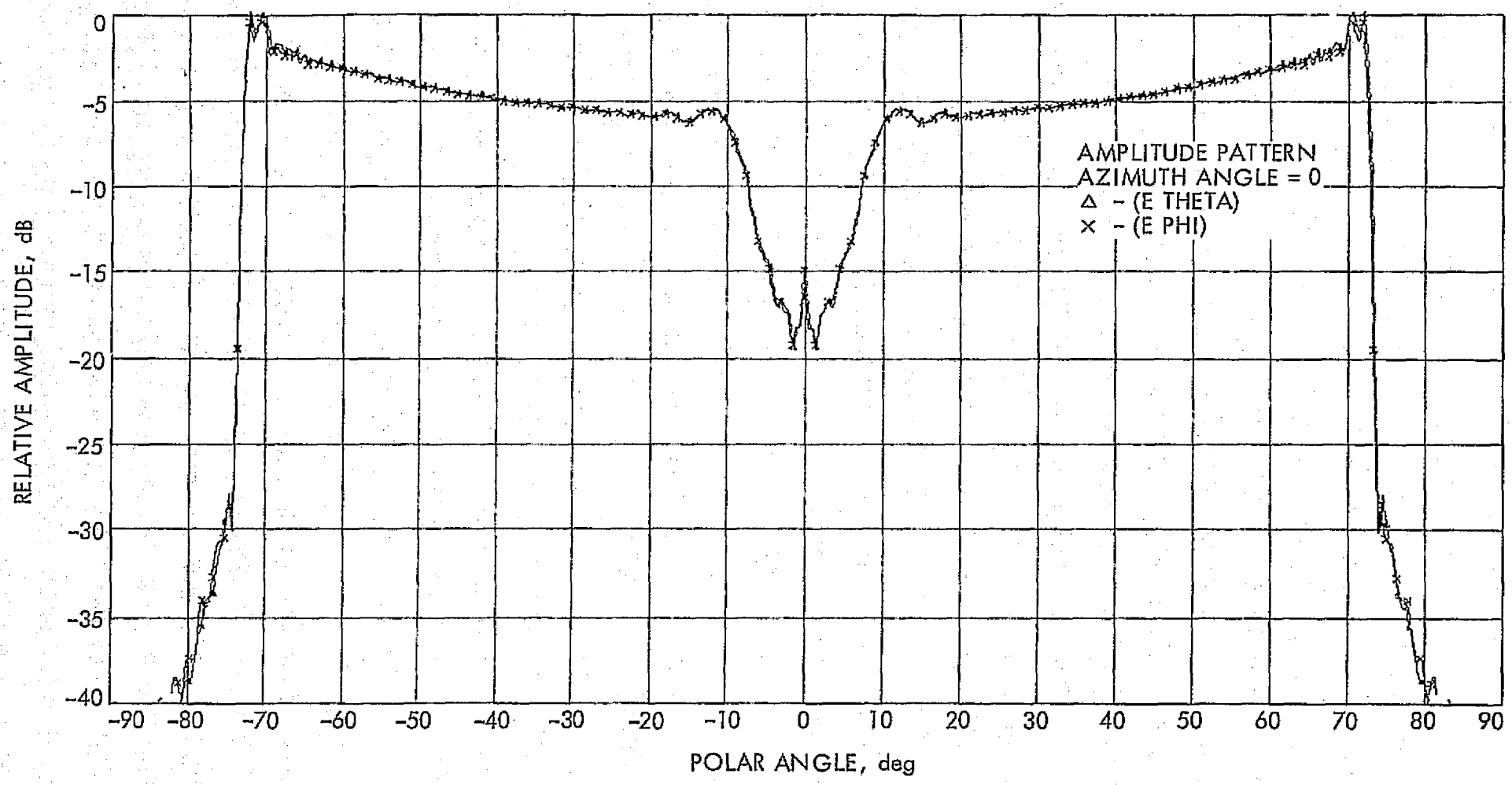

Figure 3-11(a). 3938X Dish, 14DH-14T, V = 42.3 ft
The 170 in. Hole, X-Band
X14DH at 14 deg, 21.54 dB Taper

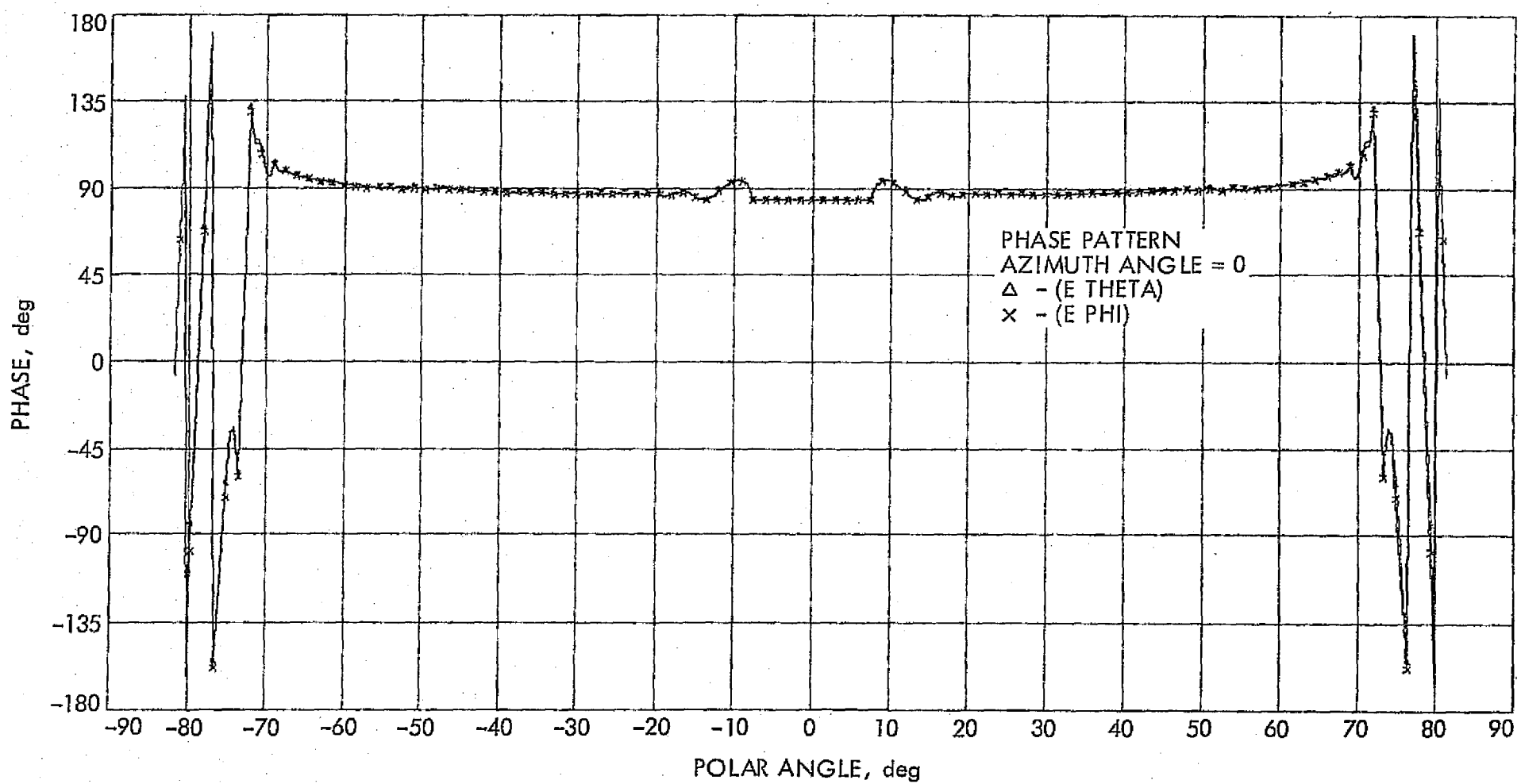

Figure 3-11(b). 3938X Dish, 14DH-14T, V = 42.3 ft
The 170 in. Hole, X-Band
X14DH at 14 deg, 21.54 dB Taper

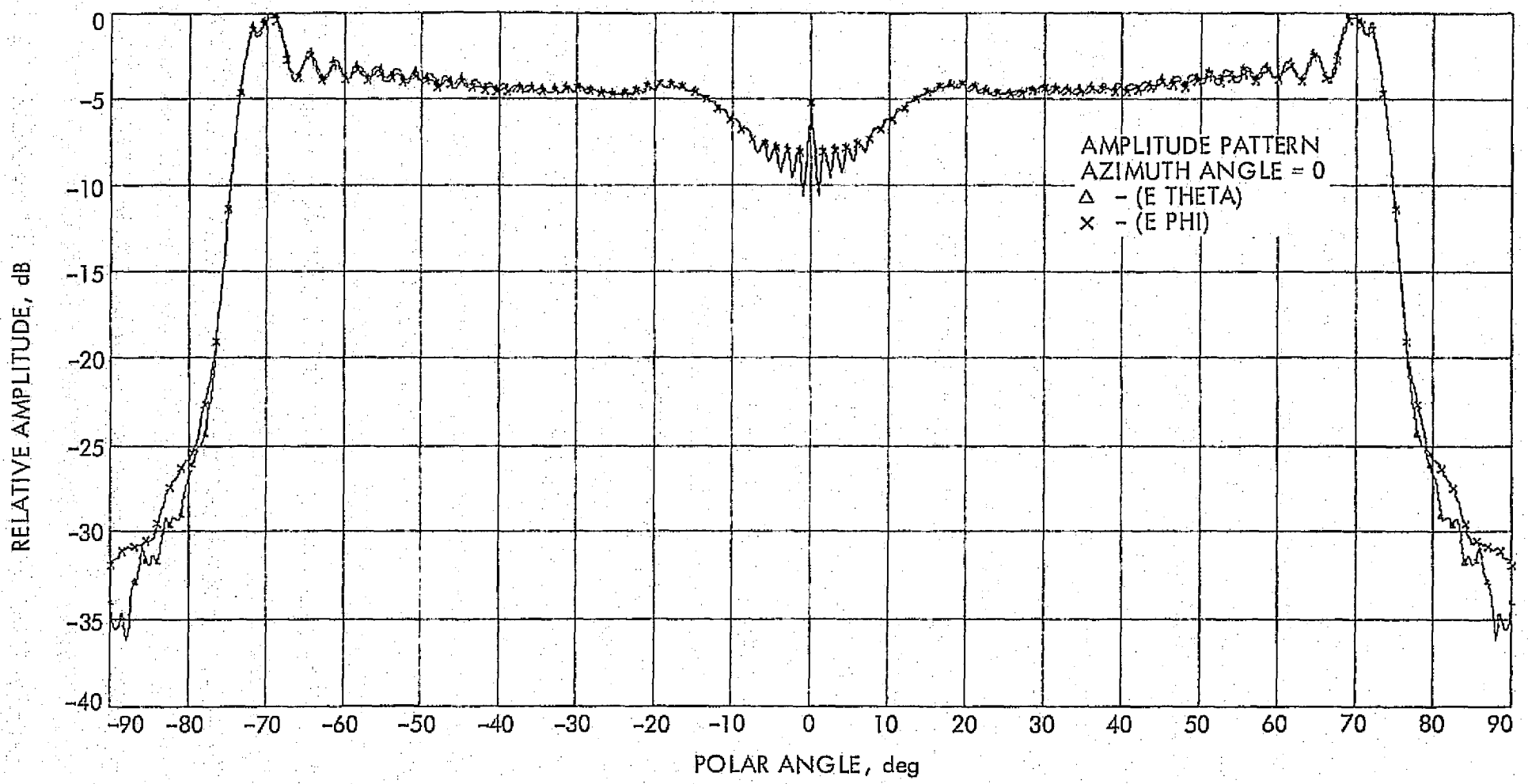

Figure 3-11(c). 3938X Dish, 14DH-14T, V= 42.3 ft
The 170 in. Hole, S-Band
S14DH at 14 deg, 16.67 dB Taper

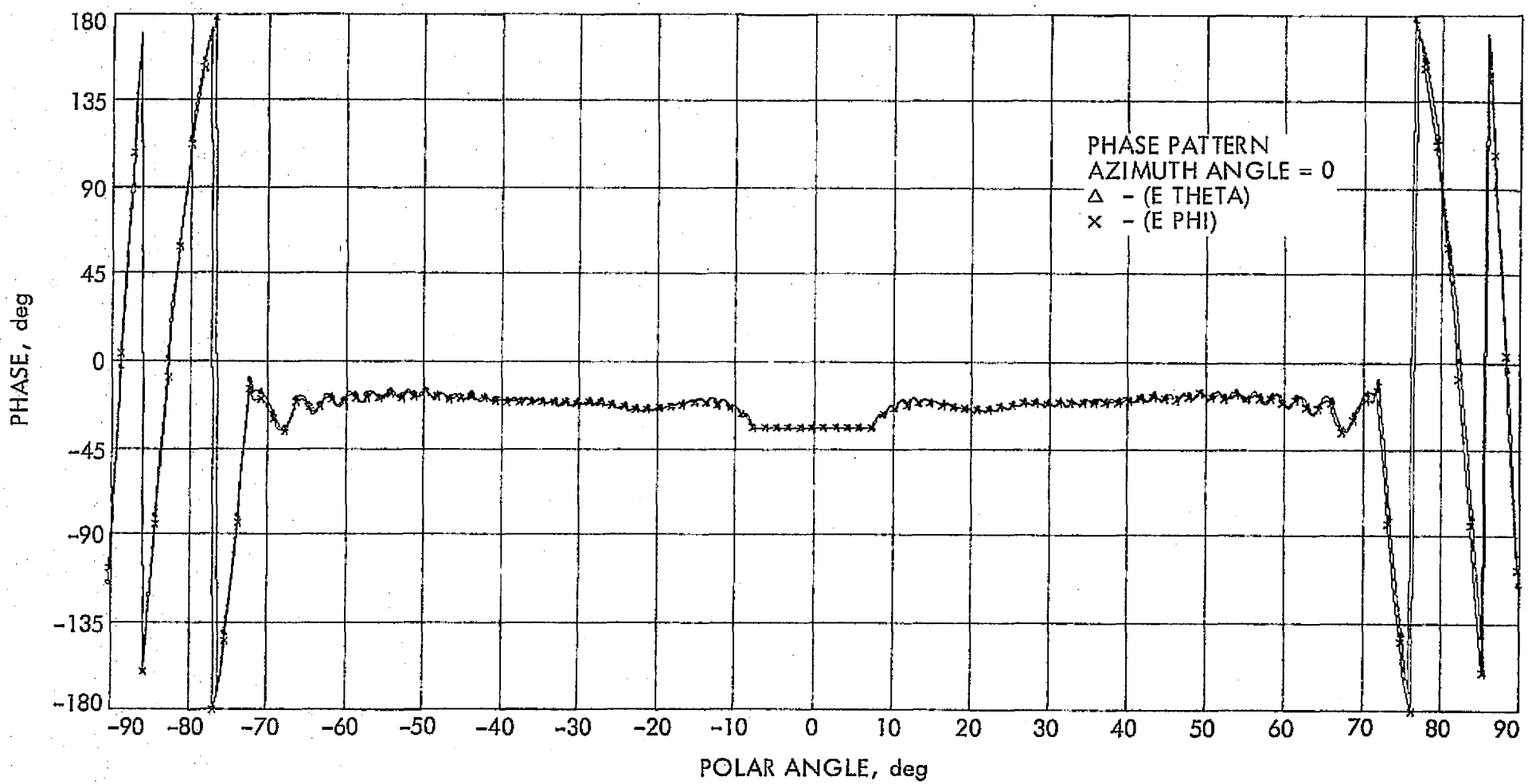

Figure 3-11(d). 3938X Dish, 14DH-14T, V=42.3 ft
The 170 in. Hole, S-Band
S14DH at 14 deg, 16.67 dB Taper

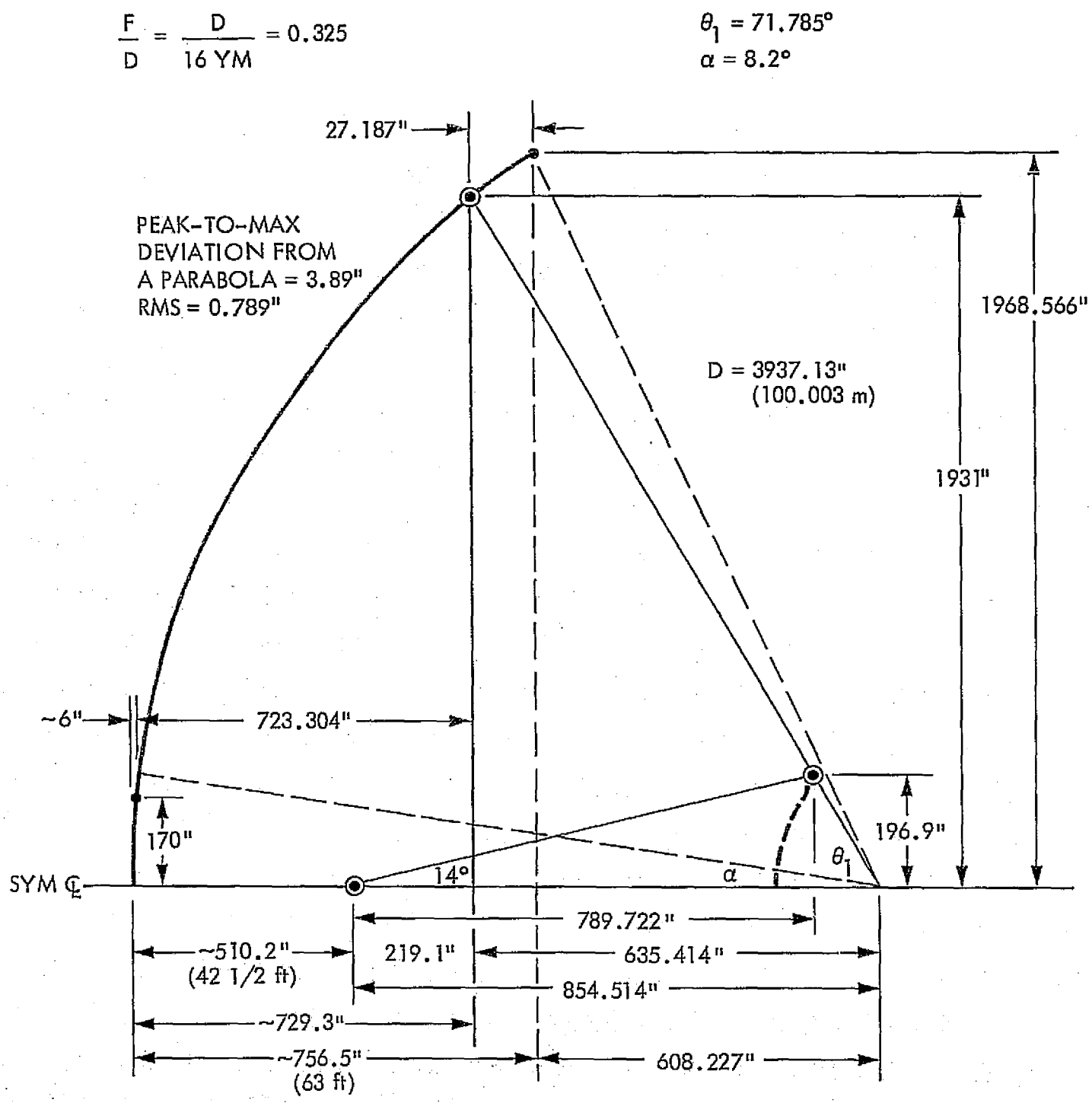

Figure 3-12. A "Best Fit" Solution Using the 14° Horn, 14° Taper, Shaped to the S-Band Pattern

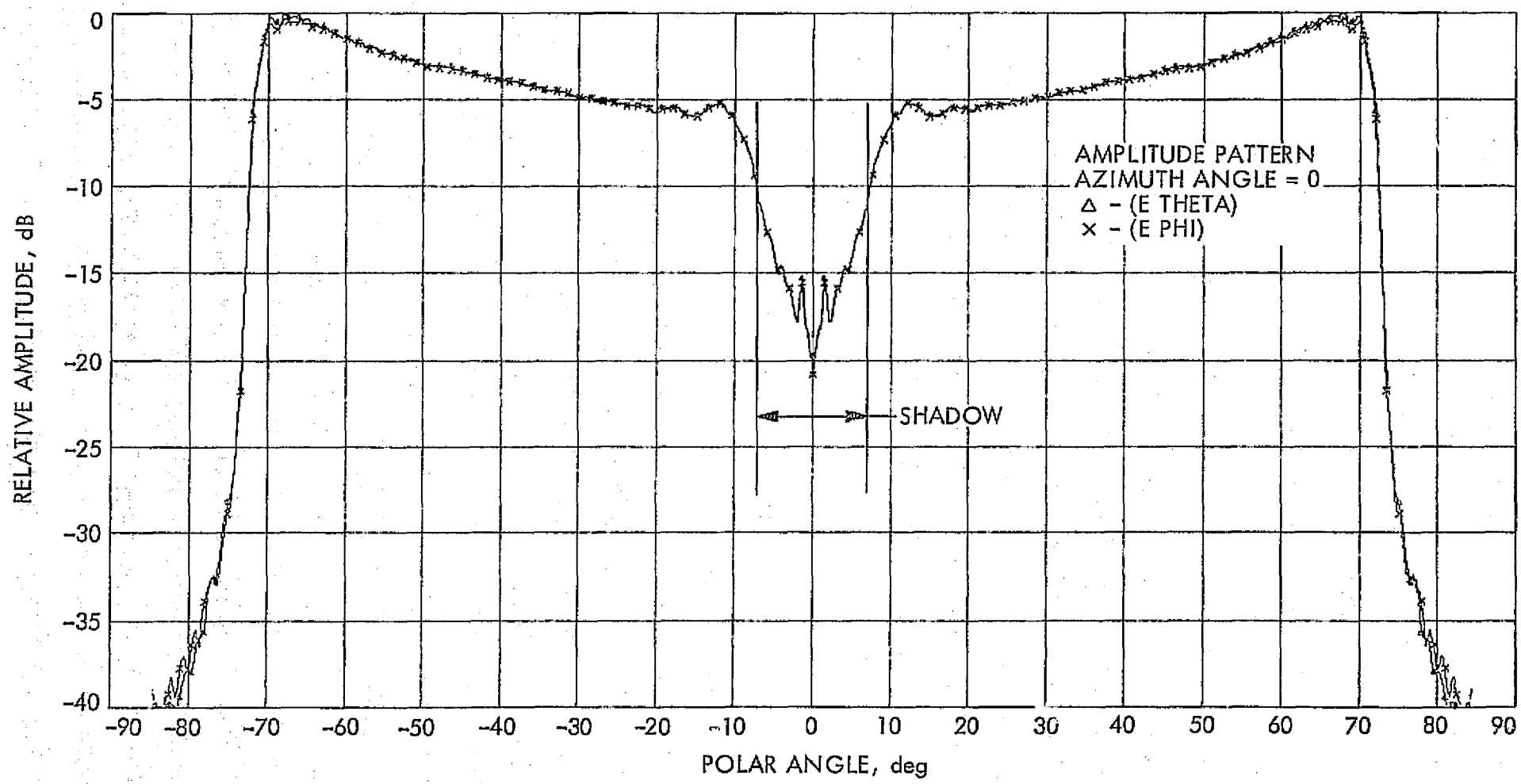

Figure 3-13(a). 3938S Dish, 14 DH-14T, V = 42.5 ft
The 170 in. Hole, X-Band
X14DH at 14 deg, 21.54 dB Taper

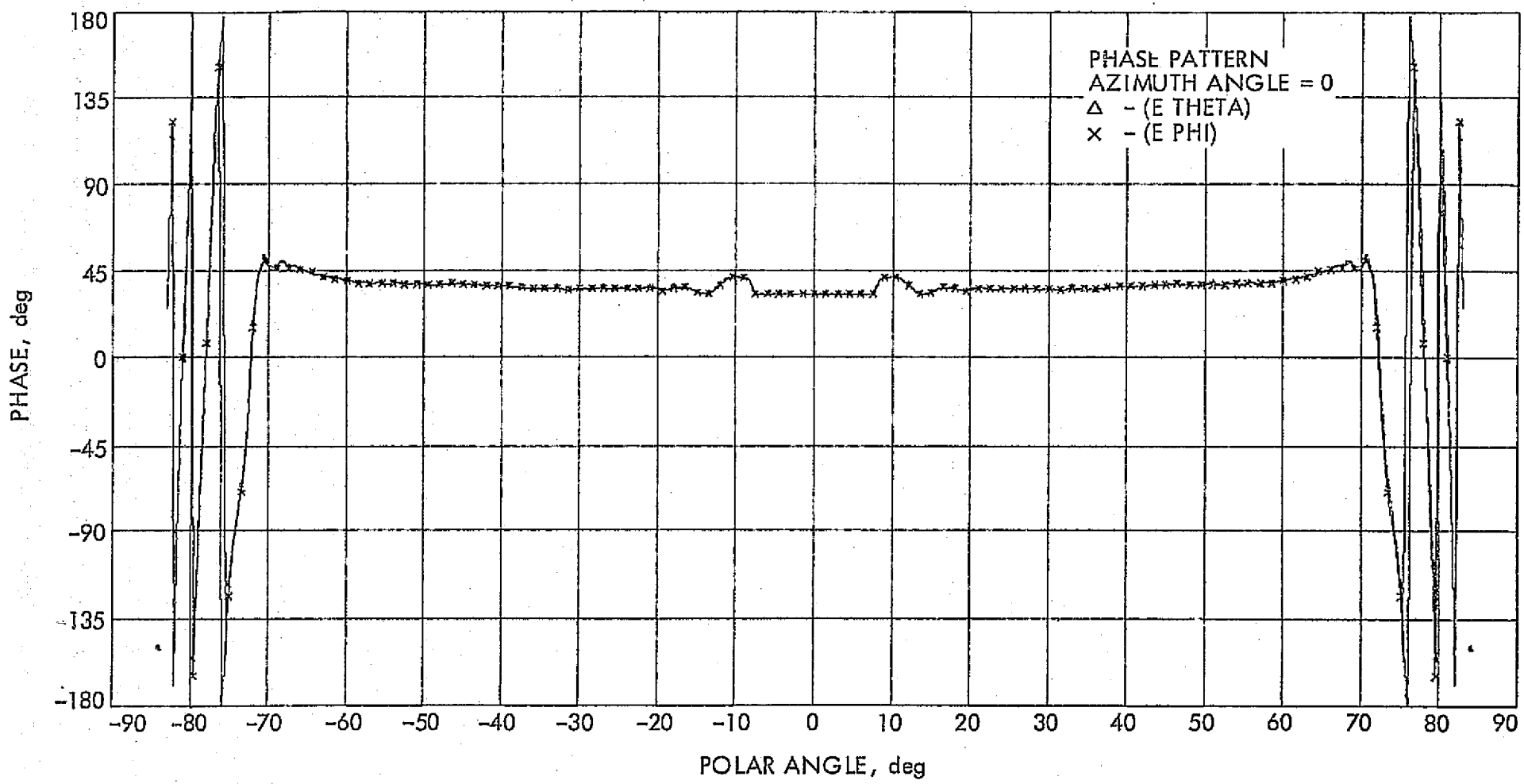

Figure 3-13(b). 3938S Dish, 14DH-14T, V = 42.5 ft
The 170 in. Hole, X-Band
X14DH at 14 deg, 21.54 dB Taper

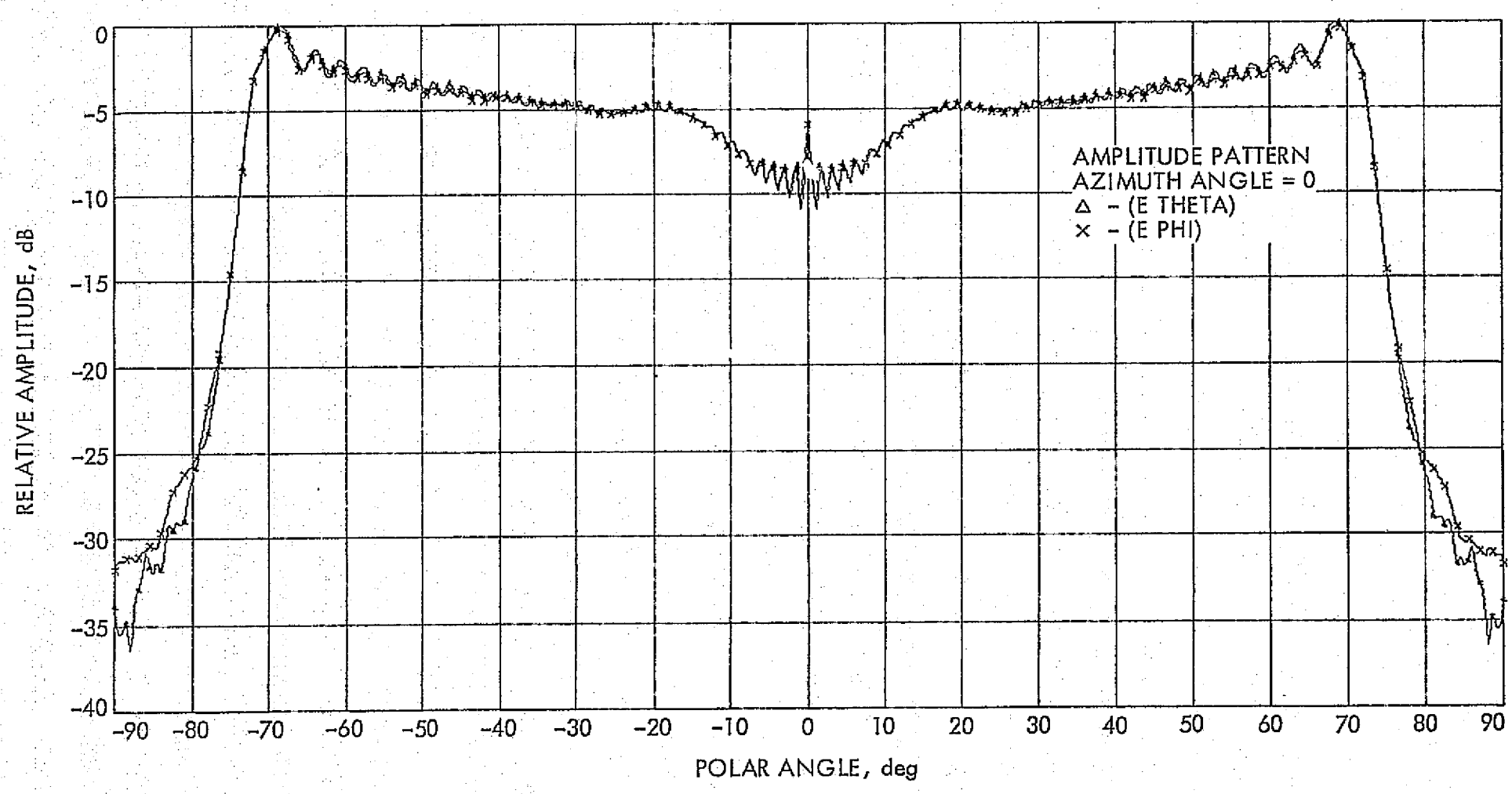

Figure 3-13(c). 3938S Dish, 0.325, V = 42.5 ft
The 170 in. Hole, S-Band
S14DH at 14 deg, 16.67 dB Taper

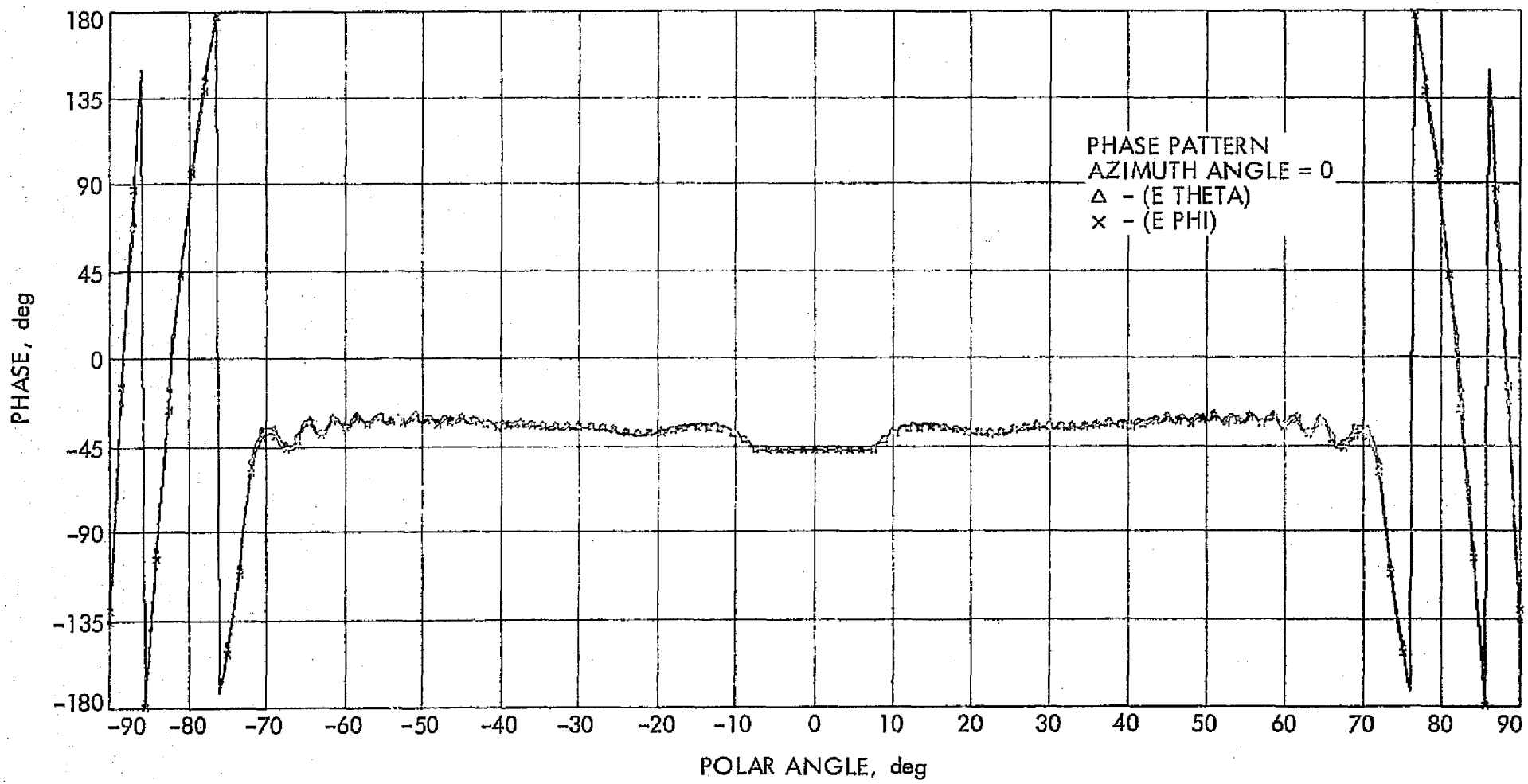

Figure 3-13(d). 3938S Dish, 0.325, V = 42.5 ft
The 170 in. Hole, S-Band
S14DH at 14 deg, 16.67 dB Taper

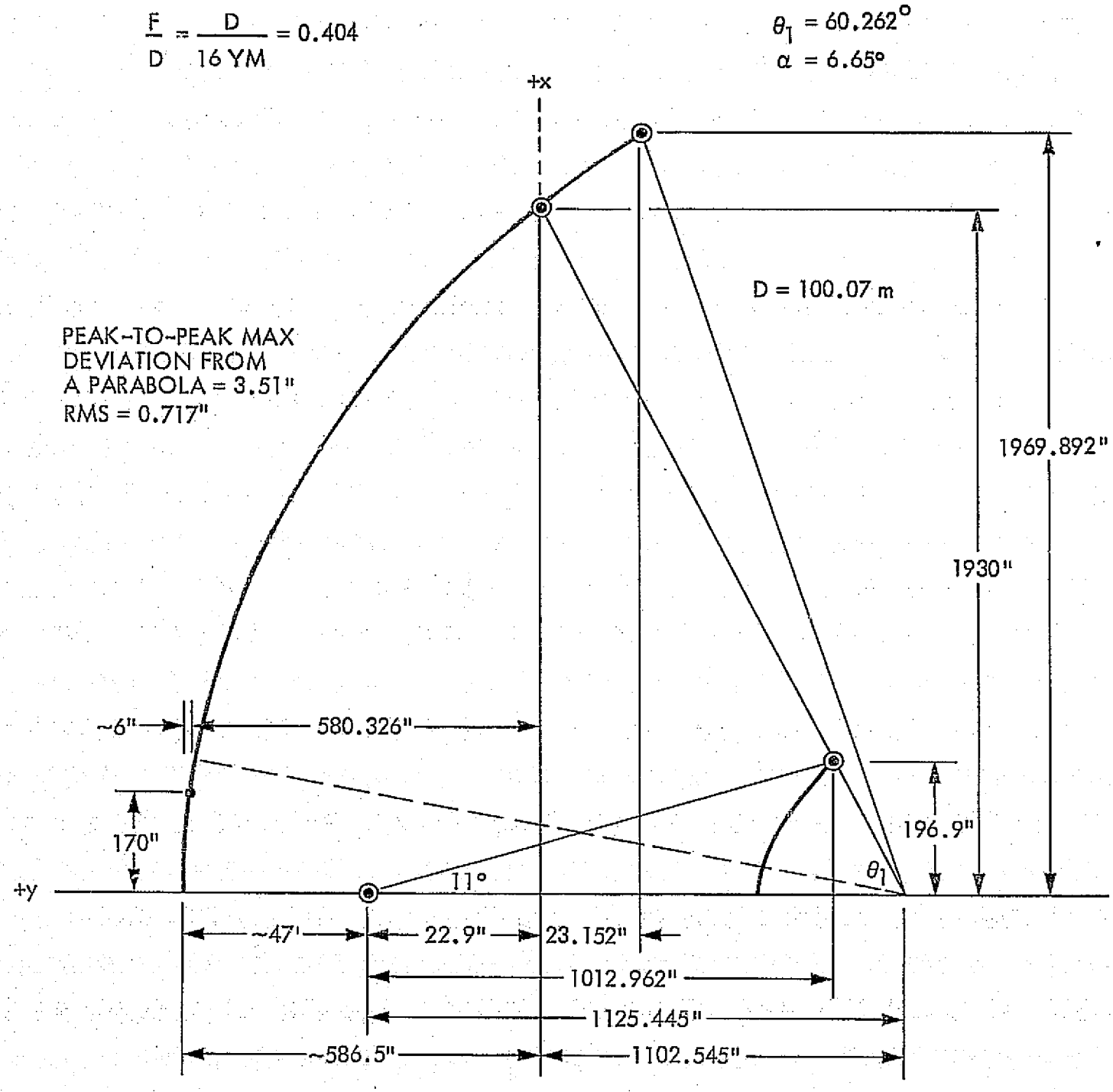

Figure 3-14. The "Best Fit" Solution to the 11 deg Horn at 11 deg Taper (16.54 dB) - "S"-Band Shaping

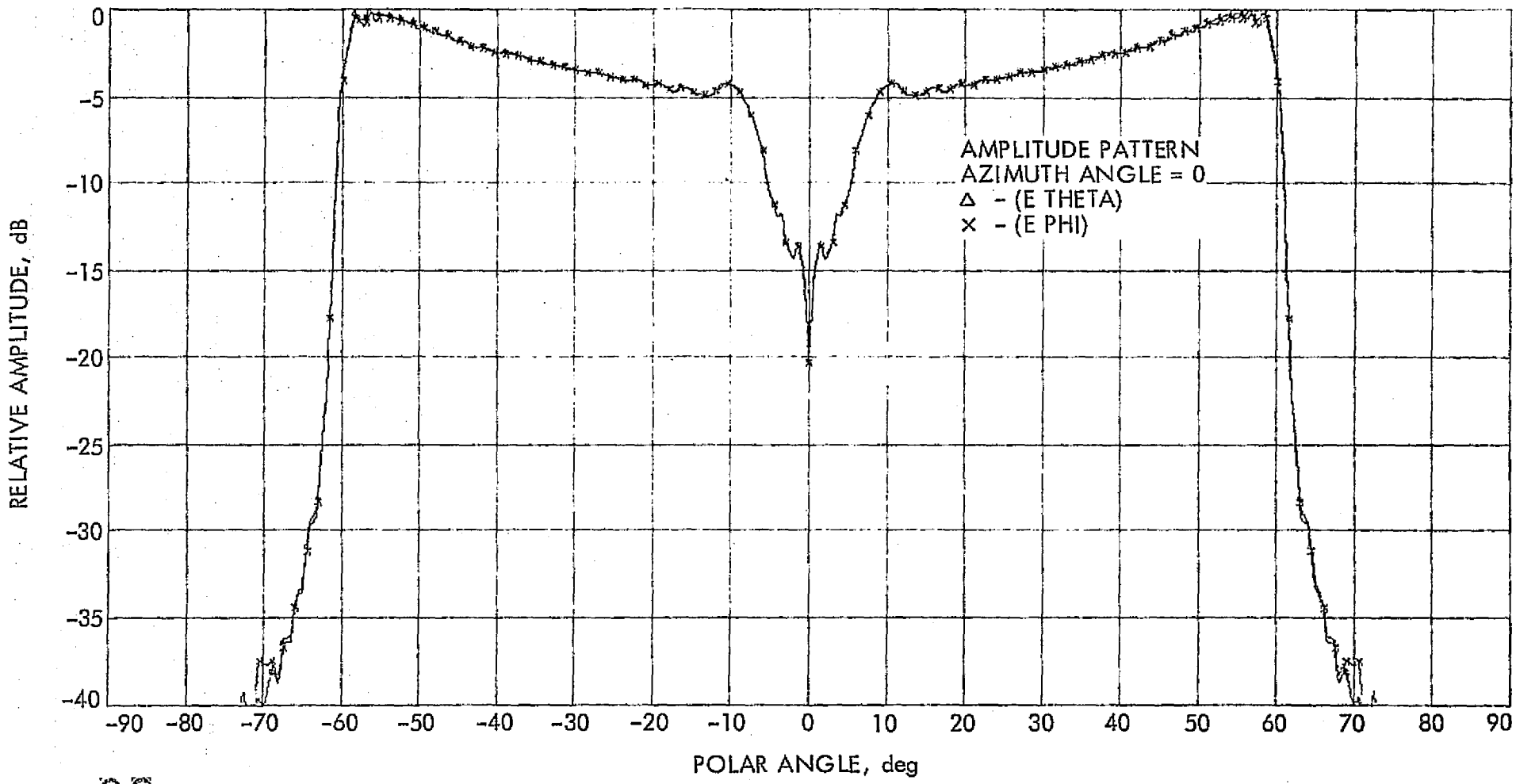

ORIGINAL PAGE IS
OF POOR QUALITY

Figure 3-15(a). 3938S Dish, 11DH, 11DT, V = 47 ft
The 170 in. Hole, S-Band Shape
X11DH at 11 deg, 21.57 dB Taper

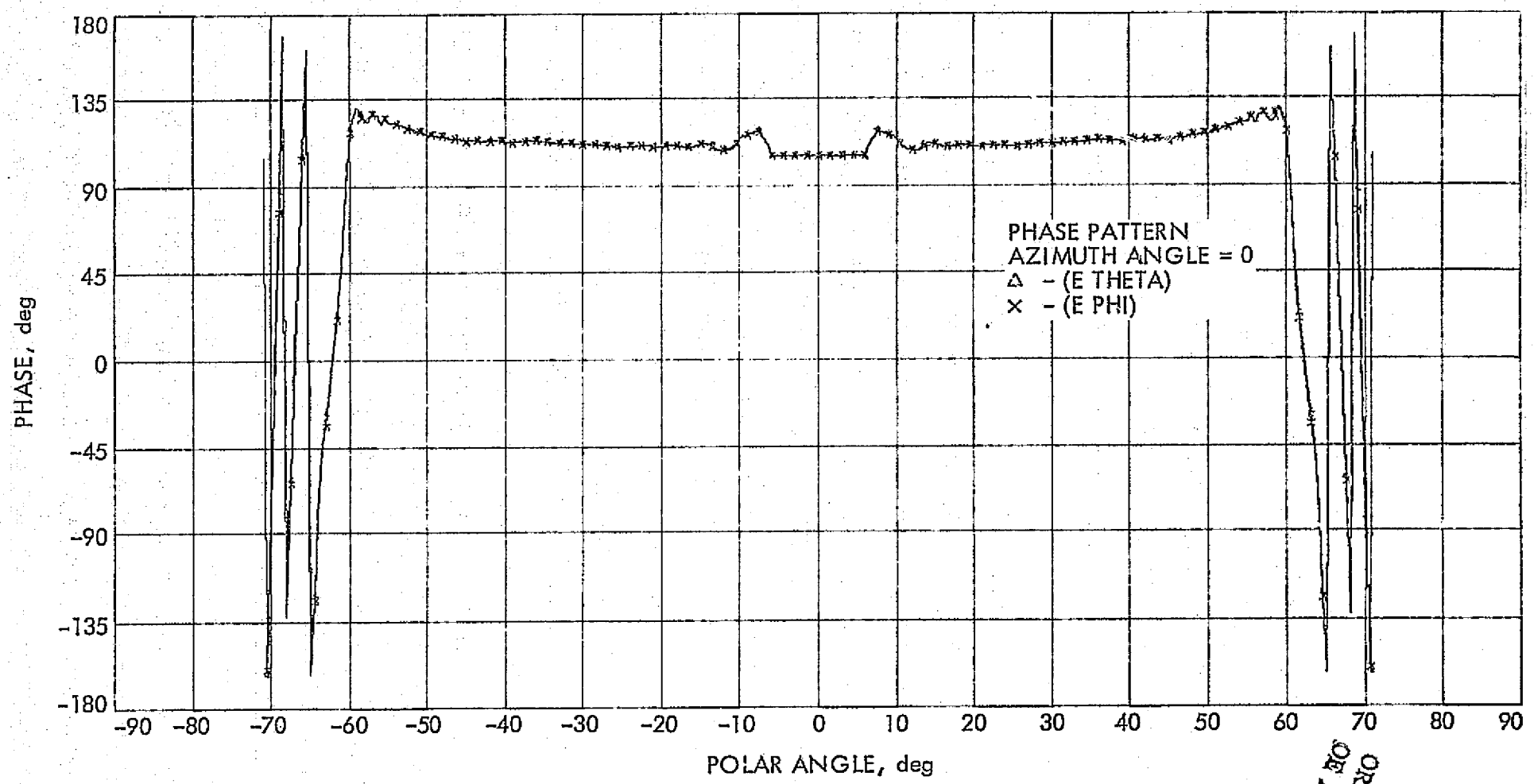

ORIGINAL PAGE IS OF POOR QUALITY

Figure 3-15(b). 3938S Dish, 11DH-11DT, V = 47 ft
The 170 in. Hole, S-Band Shape
X11DH at 11 deg, 21.57 dB Taper

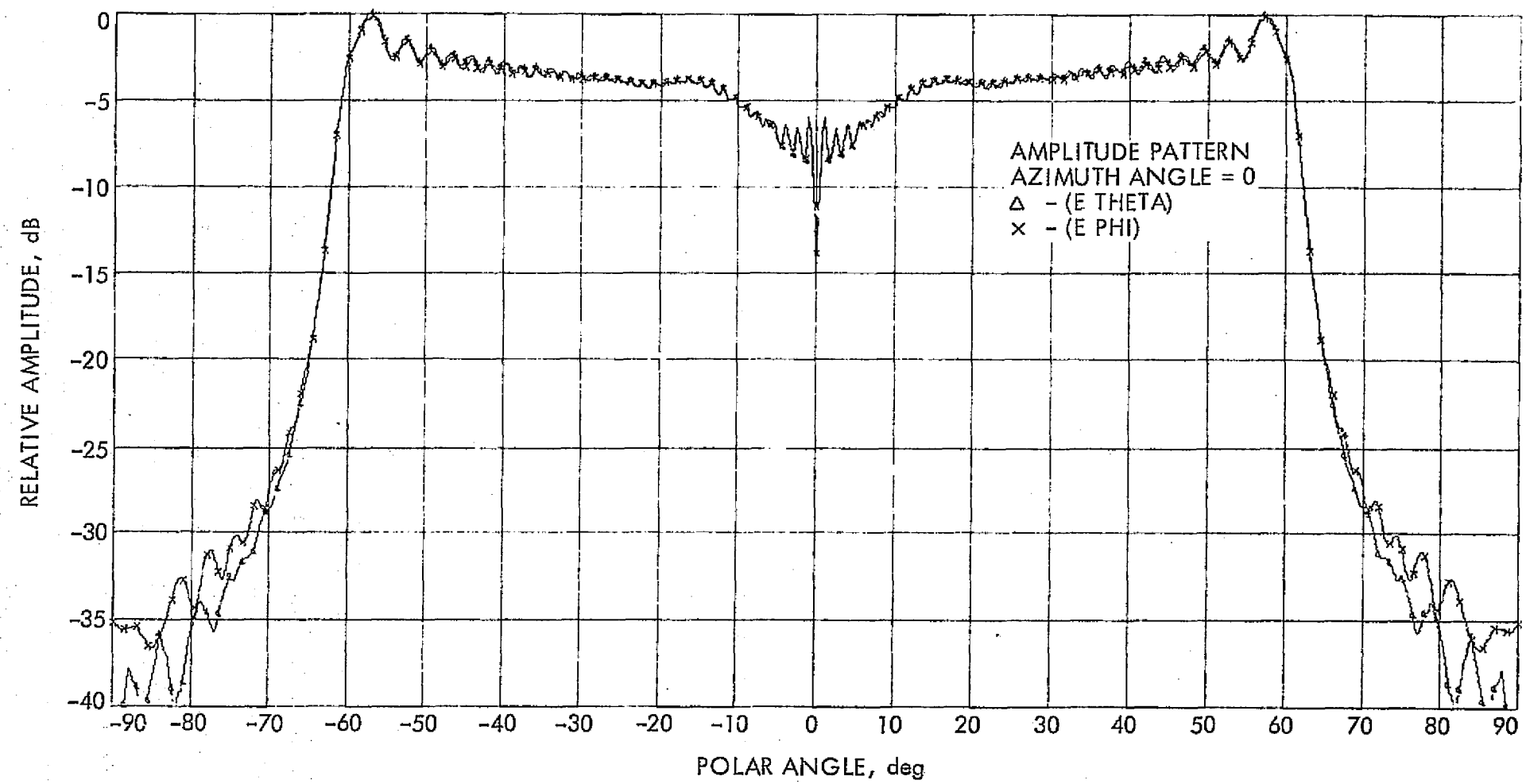

Figure 3-15(c). 3938S Dish, 11DH, 11DT, V = 47 ft
The 170 in. Hole, S-Band Shape
S11DH at 11 deg, 16.64 dB

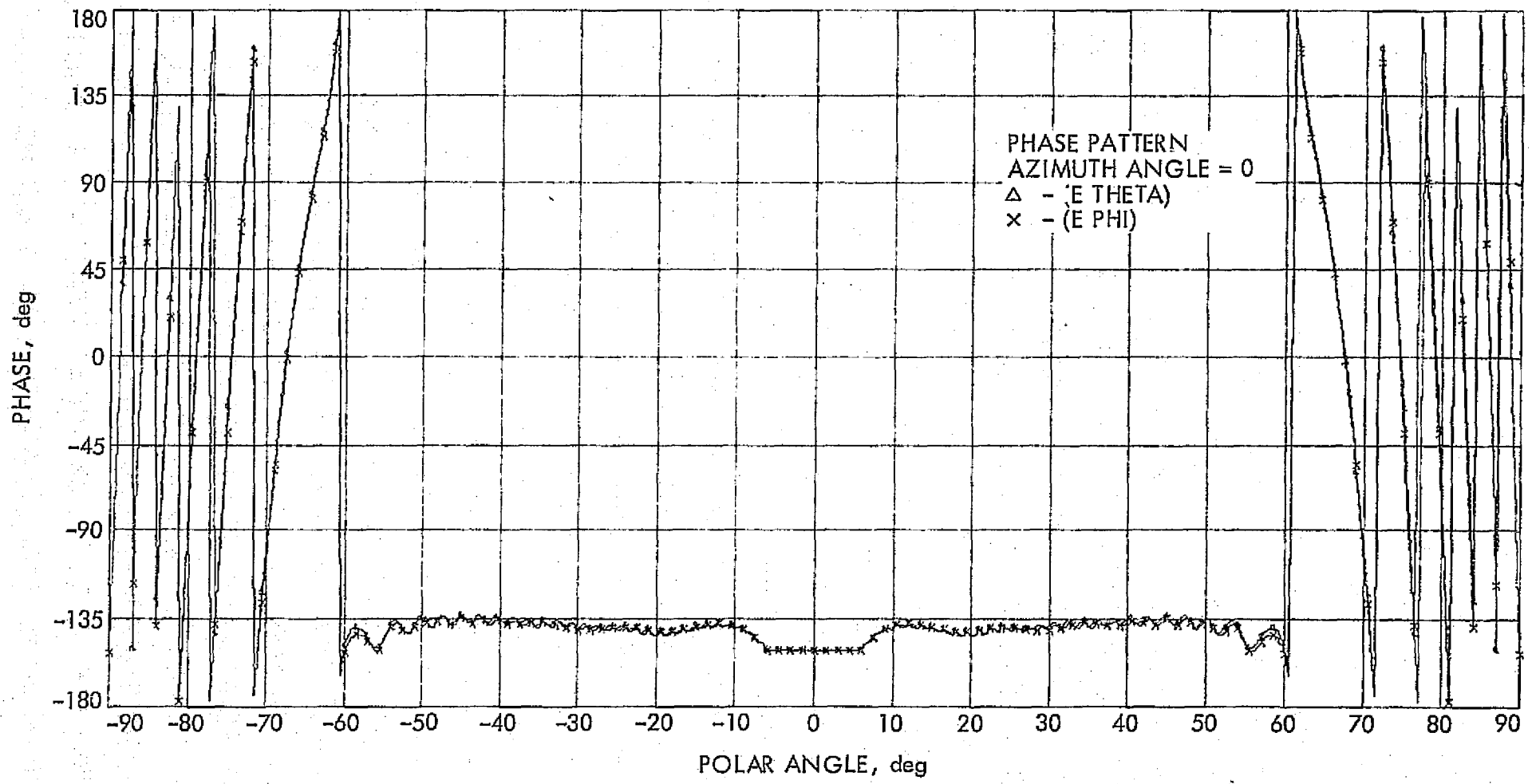

ORIGINAL PAGE IS
OF POOR QUALITY

Figure 3-15(d). 3938S Dish, 11DH-11DT, V = 47 ft
The 170 in. Hole, S-Band Shape
S11DH at 11 deg, 16.54 dB

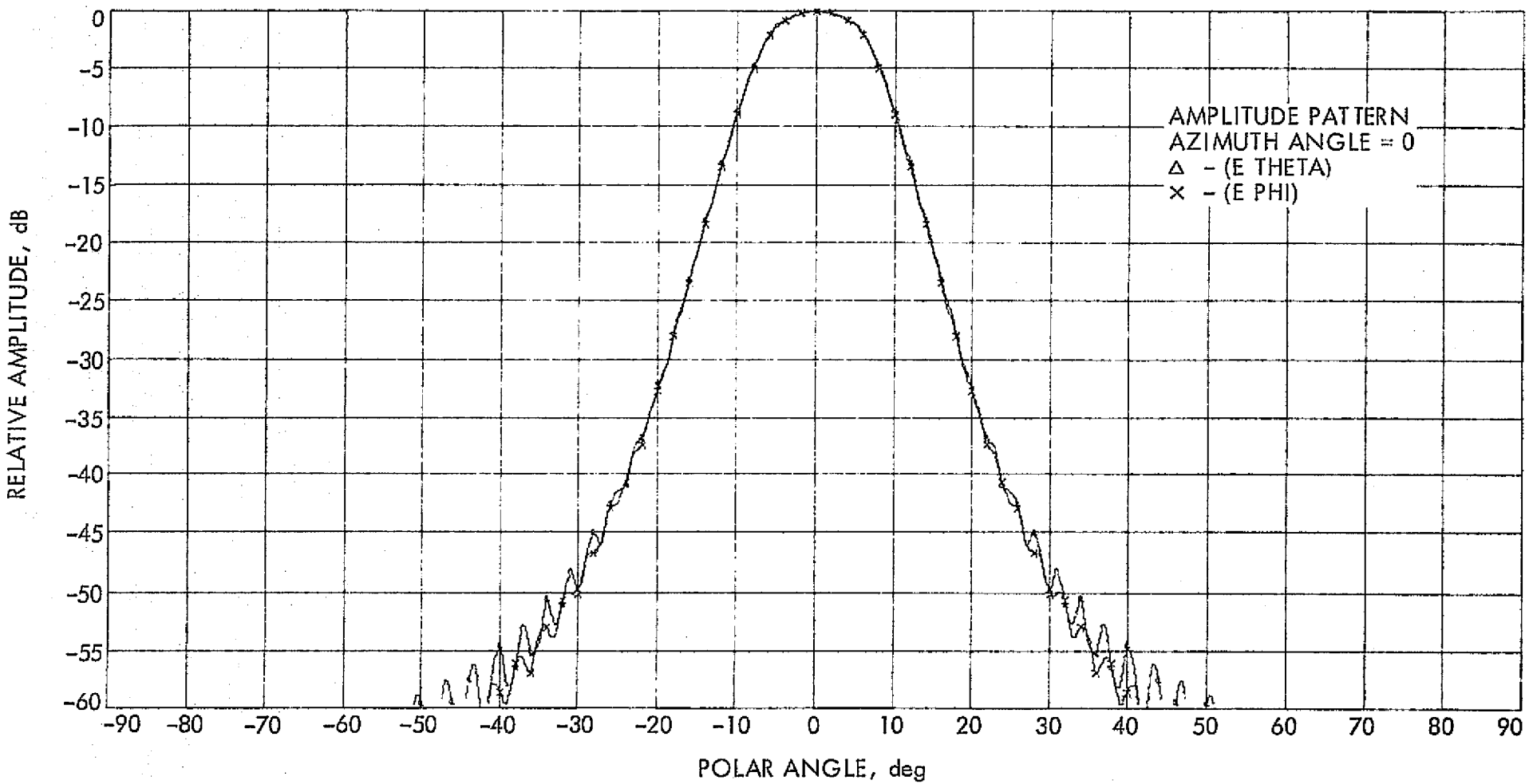

Figure 3-16. The 14 deg Horn with 120 in. Aperture, Freq = 2.295 GHz
(phase center 225 inches behind aperture)

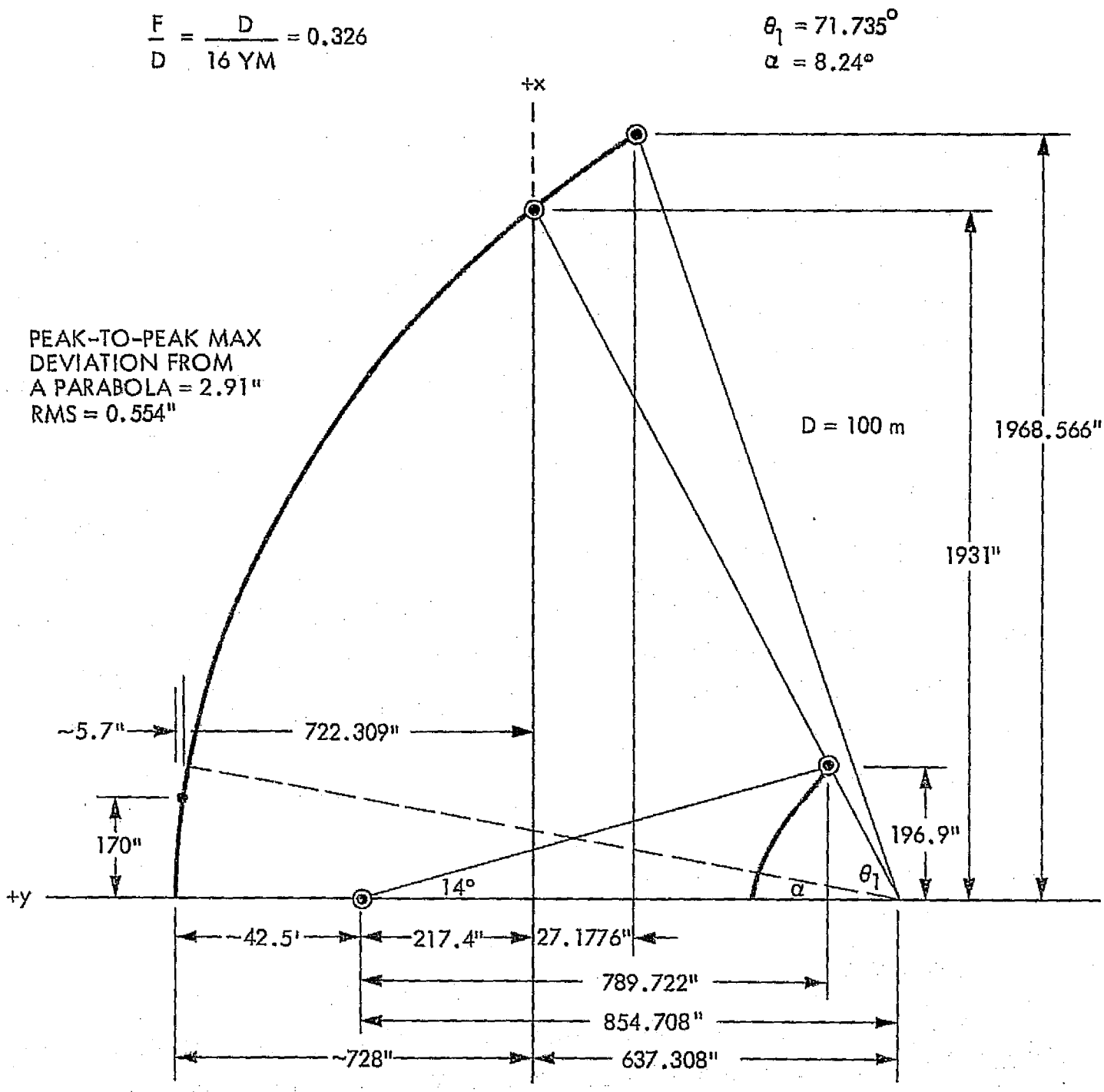

Figure 3-17. The "Best Fit" Solution Using a 120" Aperture, 14° Horn, 14° Taper, Shaped to S-Band Pattern

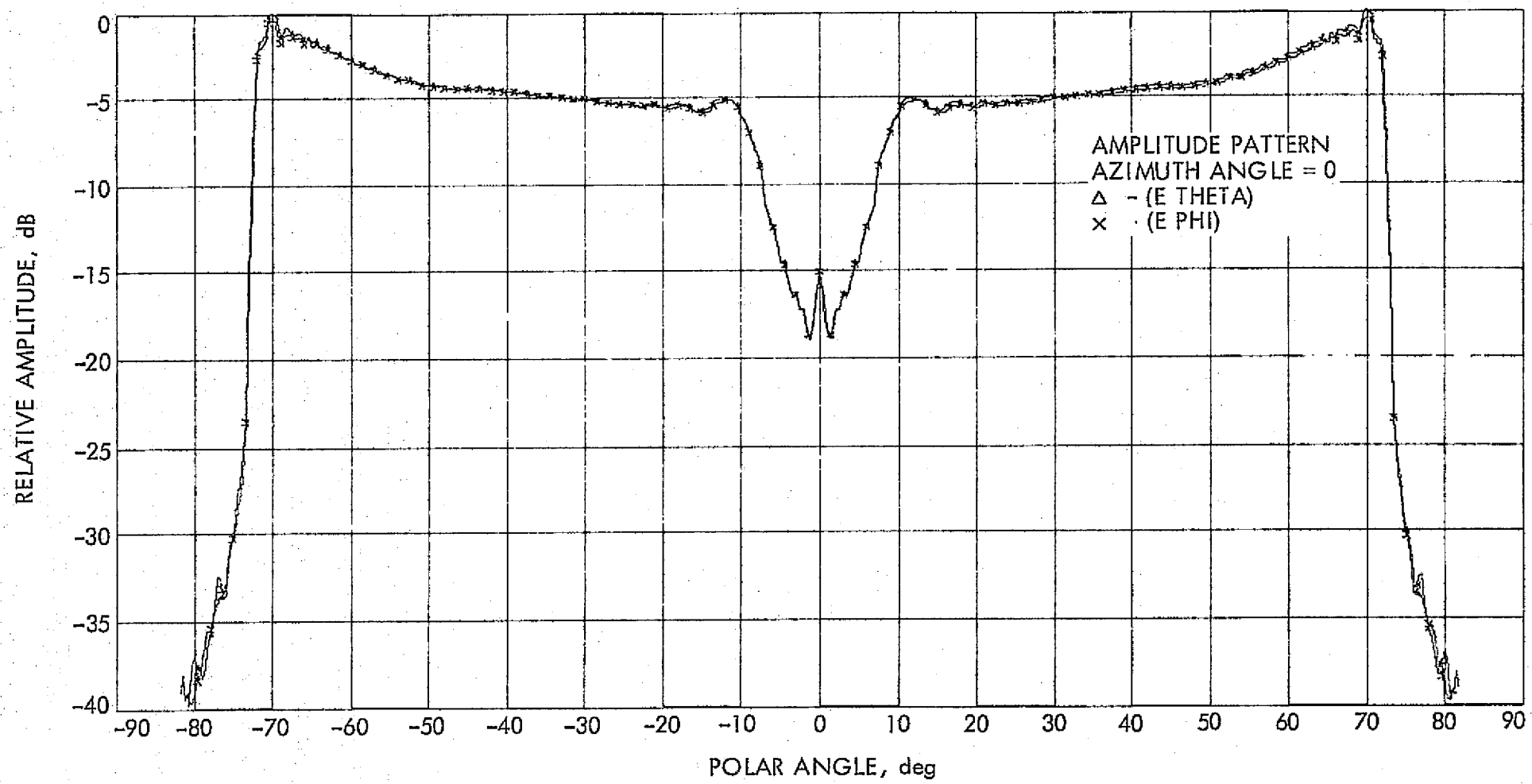

Figure 3-18(a). 120 in. Aperture S-Dish, V = 42.5 ft
The 170 in. Hole, S-Band Shape
X14DH-67 at 14 deg, 21.54 dB Taper

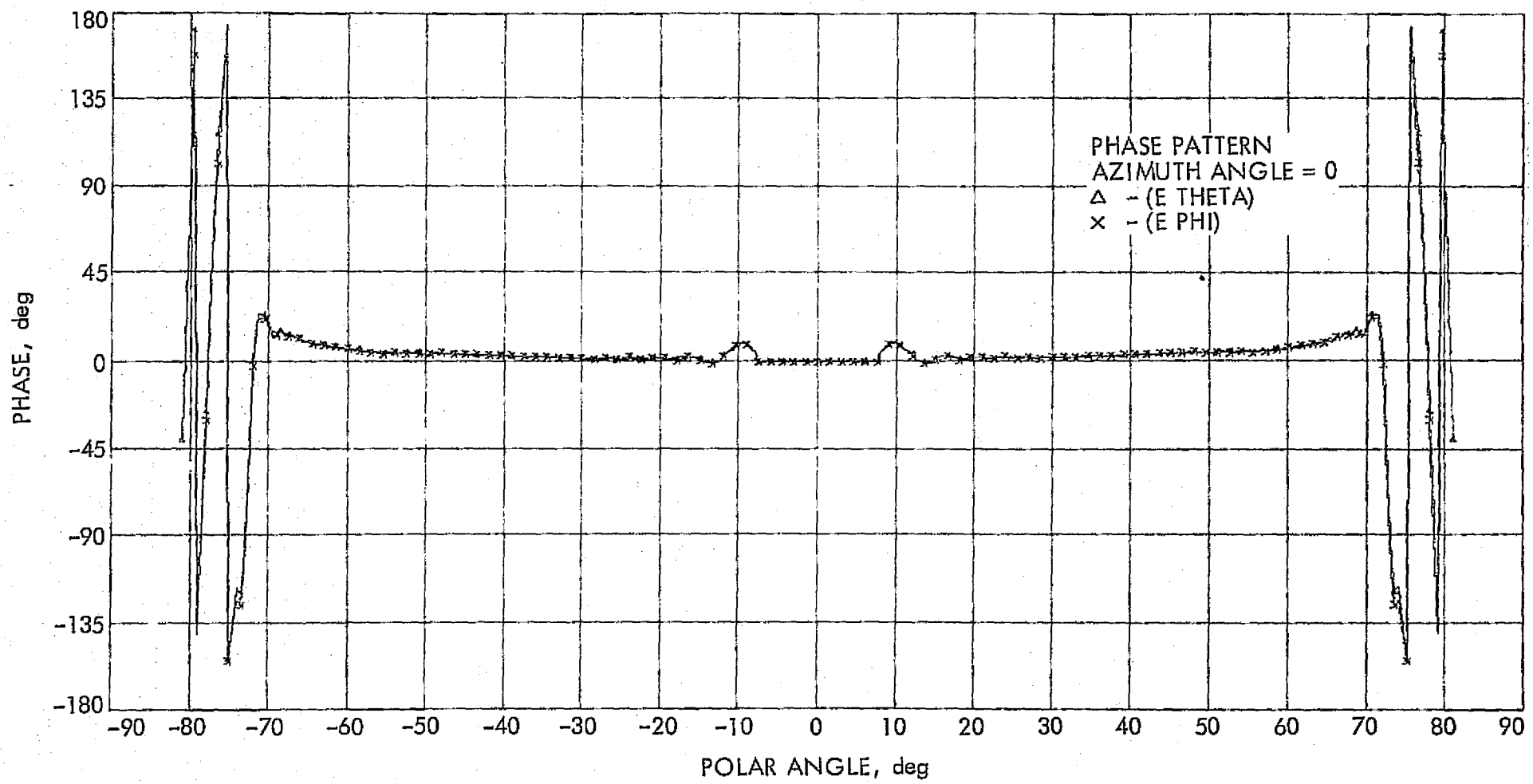

Figure 3-18(b). 120 in. Aperture S-Dish, V = 42.5 ft
The 170 in. Hole, S-Band Shape
X14DH-67 at 14 deg, 21.54 dB Taper

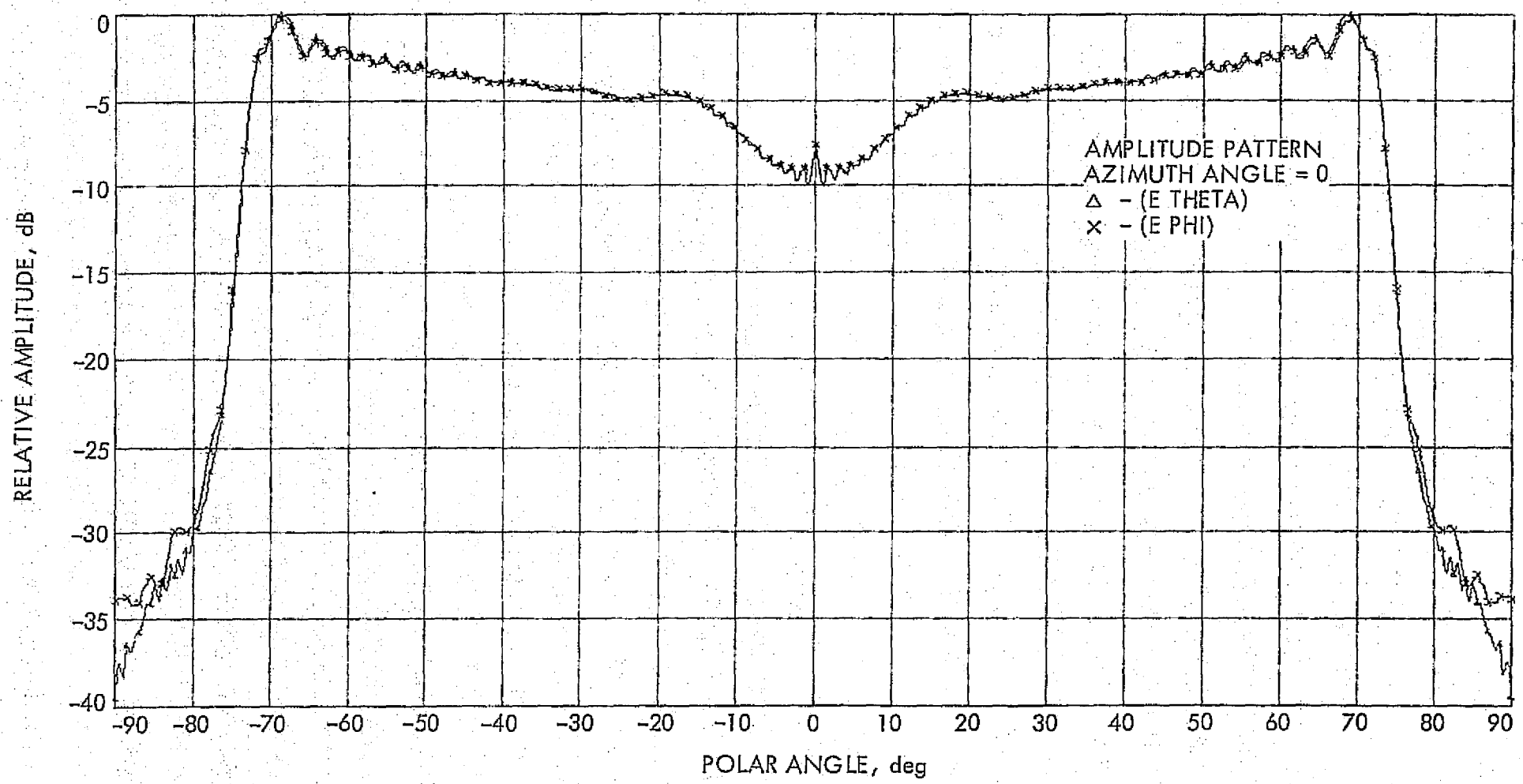

Figure 3-18(c). 120 in. Aperture S-Dish, V = 42.5 ft
The 170 in. Hole, S-Band
S14DH-120 at 14 deg, 18.32 dB Taper

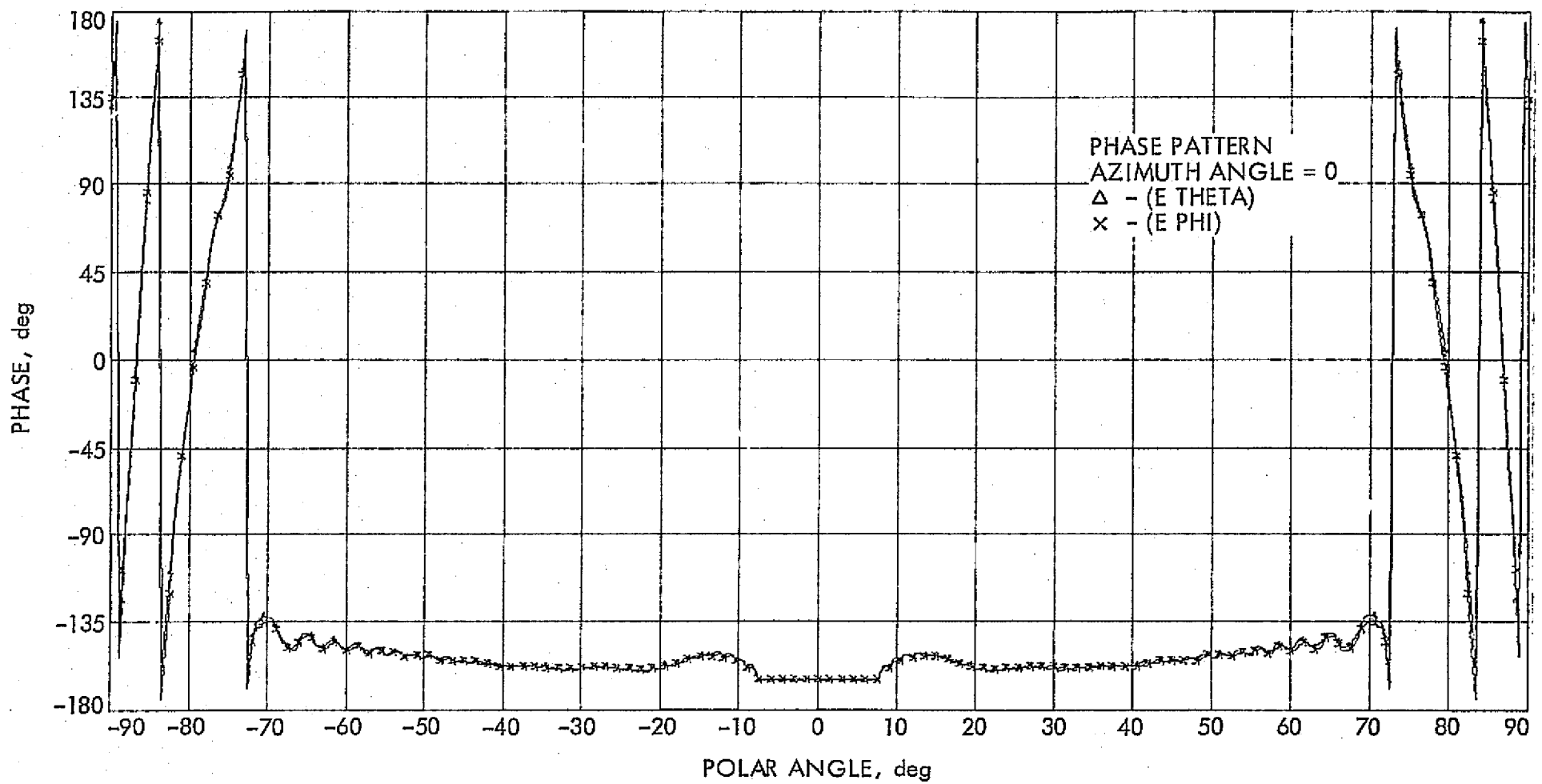

Figure 3-18(d). 120 in. Aperture S-Dish, V = 42.5 ft
The 170 in. Hole, S-Band
S14DH-120 at 14 deg, 18.32 dB Taper

APPENDIX A

The Program for Calculating a Dual Shaped Reflector System

The following computer program listing is for calculating a dual shaped reflector system (Cassegrain) that will provide final uniform illumination over a primary aperture for any input horn or feed pattern. The solution is based on geometric optics.

The significant output will appear on two temporary files, ENDFILE 20 and ENDFILE 21. ENDFILE 20 carries the coordinates of the quasi-paraboloid and quasi-hyperboloid in X,Y,R, Θ (figure 3-0). ENDFILE 21 carries information on the quasi-hyperboloid suitable for use in the RUSCH symmetrical scattering program.

A feature of the program allows for a choice of a null illumination of the central region of the system. This can reduce the amount of energy that is blocked by the central reflector (quasi-hyperboloid) and hence to a greater blockage efficiency.

The input deck for the program is as follows:

1.	XNMAX, YNMAX	(2F10.5)
2.	TITLE 1	(20A4)
3.	TITLE 2	(20A4)
4.	JIN	(I5)
5.	(TTABLE (I,J), J=1,5) I=1, JIN	(5F10.6)
(5+JIN).	NSKIP, MULT	(2I5)
(6+JIN).	INTP	(I5)
(7+JIN).	XMAX, THEMAX, PPDIAM, XMIN, C, FREQ.	(6F10.4)
(8+JIN).	AN, DELAMX, DELAMN	(3F10.4)

Definitions:

XNMAX: See figure 3.0, the maximum quasi-paraboloid radius.

YNMAX: Figure 3.0, used if DELAMX is not equal to zero, defines the chosen paraboloid for best fitting.

TITLE 1, TITLE 2: arbitrary titles.

JIN: The number of cards (points) in the input horn pattern.

T TABLE: THETA, E(Θ), EP(Θ), H(Θ), HP(Θ)

where

THETA: Angle in degrees for the horn pattern.

E(Θ): E - plane field (volts) of the horn.

EP(Θ): Phase of the E - plane.

H(Θ): H - plane field (volts) of the horn.

HP(Θ): phase of the H - plane.

NSKIP: Set equal to 1 for printout.

MULT: Determines the number of coordinates of the output quasi-paraboloid.

=1, 251 points

=2, 501 points

=3, 751 points

=4, 1001 points

INTP: Becomes P (see program printout)

XMAX: The maximum "X" value, see XNMAX

THEMAX: The maximum illumination angle of the chosen horn pattern (edge illumination)

PPDIAM: The chosen diameter for the subreflector, i.e., quasi-hyperboloid.

XMIN: The radius of the central region chosen for a zero of illumination. Equal to 0.0 if no central null is desired.

C: Set equal to -1000.0, no longer used.

FREQ: Frequency in GHz, no longer used.

AN: Selected starting value for horn focus location. See figure 3-6. AN is positive in the direction toward the quasi-paraboloid vertex from the aperture plane.

DELAMX: First chosen increments (larger) for changing AN while looking for the best fit paraboloid. Equal to zero if no search is desired.

DELAMN: Second chosen (smaller) increments while searching for the best fit paraboloid.

All angles above are input in degrees, all linear dimensions are input in inches.

```
C                                                                       DR100020
C     *******  DUAL REFLECTOR ANTENNA SYSTEM DESIGN      ***************DR100030
C                  ** A FORTRAN 4 PROGRAM **                            DR100040
C     WRITTEN BY PHIL JARVIE,II,AND ROB GERRITSEN FOR ART LUDWIG,JPL.   DR100050
C                                                                       DR100060
C        THIS PROGRAM IS AN EXTENSION OF DAR WITH TWO ADDED OPTIONS.    DR100070
C     THE FIRST OPTION IS INTERNAL VARIATION OF THE PARAMETER A, WHICH  DR100080
C     DETERMINES THE Y COMPONENT OF THE CENTER OF THE POLAR CO-ORDINATE DR100090
C     SYSTEM.                                                           DR100100
C     THE VARIATION OF A IS CARRIED OUT SO THAT A BEST A IS FOUND,      DR100110
C     WHERE THE BEST A IS THAT A WHICH MINIMIZES THE NORMAL             DR100120
C     DEVIATION OF THE MAIN REFLECTOR FROM A NOMINAL MAIN REFLECTOR.    DR100130
C     FOR EACH VALUE OF A TRIED THE PROGRAM SOLVES THE THREE SIMUL-     DR100140
C     TANEOUS DIFFERENTIAL EQUATIONS AS IN DAR.                         DR100150
C     RESULTS ARE PRINTED FOR THE DUAL REFLECTOR SUSTEM CORRESPONDING   DR100160
C     TO THE BEST A.                                                    DR100170
C                                                                       DR100180
C        THE OTHER OPTION IS A POSTPROCESSOR WHICH PUNCHES OUT A SET OF DR100190
C     DECKS.                                                            DR100200
C                                                                       DR100210
C     FOR PUNCH OPTION P, USE 0 FOR NO PUNCHED OUTPUT, USE 1 FOR
C     STANDARD PUNCHED OUTPUT AND USE 2 FOR ROY LEVY PUNCHED OUTPUT
C  MODIFIED FOR DEMAND TERMINAL USE
C  P.POTTER, SECTION 333
C  2/11/74
C                                                                       DR100220
C  MODIFIED EXTENSIVELY DURING 1977 BY L. HOWARD AND W. F. WILLIAMS.
C  INCLUDED CHANGES TO THE EQUATIONS TO BE INTEGRATED, THE DETERMINATION
C  OF THEIR DERIVATIVES, METHOD OF INTEGRATION, CONSTANTS OF INTEGRATION,
C  FORM OF OUTPUT, ETC. (SEE DOCUMENT DETAILS)
C                                                                       DR100230
      COMMON/DERARG/A,C2,VAR(4),DER(4),EU(3),EL(3),TEMPS(41)            DR100240
      COMMON/ALWAYS/XNMAX,YNMAX                                         DR100250
      COMMON/AFTER/XSAV(1004),YSAV(1004),YDRSAV(1004),NOD,FNOD
      COMMON/FORGOT/XMAX,Y0,XMIN                                        DR100270
      COMMON/CPOST/RAD(1004),RPR(1004),THPR(1004),THE(1004),C,P,MULT
      COMMON TTABLE(200,8),HEAD1(20),HEAD2(20),HEAD3(20),PAGE,LINE      DR100290
      COMMON JMAX,J0,JIN,IC1,IC2,R0,WL,THEMAX                           DR100300
C                                                                       DR100310
      INTEGER PAGE                                                      DR100320
      REAL K,NORMAX,NORMIN,MAXX,MAXY,MINX,MINY                          DR100330
      EQUIVALENCE (X,VAR(1)),(THETA,VAR(2)),(Y,VAR(3)),(R,VAR(4)),      DR100340
     X(H,DER(1)),(THETAP,DER(2)),(YP,DER(3)),(RP,DER(4))                DR100350
C                                                                       DR100360
 1000 WRITE(6,2000)
 2000 FORMAT(///20X27HSYMMETRICAL SHAPING PROGRAM//)
```

```
      WRITE(6,2010)
 2010 FORMAT(35H ***INPUT XNMAX,YNMAX, 2F10.5, OR #//)
      READ(5,2020,END= 6000) XNMAX,YNMAX
      WRITE(6,2011) XNMAX,YNMAX
 2011 FORMAT(1X,8F12.5)
 2020 FORMAT(8F10.5)
C                                                                       DR100390
C                                                                       DR100400
C     START OF PROGRAM, READ IN MAINHEADER.                             DR100410
C                                                                       DR100420
      WRITE(6,2030)
 2030 FORMAT(//21H ***INPUT MAIN HEADER//)
      READ(5,1)HEAD1                                                    DR100430
    1 FORMAT(20A4)                                                      DR100440
      WRITE(6,2031) HEAD1
 2031 FORMAT(1X,20A4)
      LINE=0                                                            DR100450
      PAGE=0                                                            DR100460
C                                                                       DR100470
C     NOW TO READ FIELD DATA HEADER,CONTROL PARAMETERS,AND DATA POINTS  DR100480
C                                                                       DR100490
      WRITE(6,2040)
 2040 FORMAT(//27H ***INPUT FIELD DATA HEADER//)
      READ(5,5)HEAD2                                                    DR100500
    5 FORMAT(20A4)                                                      DR100510
      WRITE(6,2031) HEAD2
C     CALL PR(0)                                                        DR100520
C     WRITE(6,5)HEAD2                                                   DR100530
      WRITE(6,2050)
 2050 FORMAT(17H ***INPUT JIN, I5//)
      READ(5,2060) JIN
 2060 FORMAT(16I5)
      WRITE(6,2061) JIN
 2061 FORMAT(1X,16I5)
      JMAX= 0
      J0= 0
      IC1= 1
      IC2= 1
      WRITE(6,2070)
 2070 FORMAT(//34H ***ADD VOLTAGE ILLUM PATTERN DECK//)
      READ(5,8)((TTABLE(I,J),J=1,5),I=1,JIN)                            DR100600
    8 FORMAT(5F10.6)                                                    DR100610
C     CALL PR(0)                                                        DR100620
C     IF(IC1)81,81,82                                                   DR100630
C   81 WRITE(6,83)                                                      DR100640
   83 FORMAT (1H012HTHETA(DEG)  8H E( DB ) 12H PHI-E(DEG)  8H H( DB )   DR100650
     X12H PHI-H(DEG) )                                                  DR100660
      GO TO 85                                                          DR100670
C   82 WRITE(6,84)                                                      DR100680
   84 FORMAT(1H012HTHETA(DEG)  8H E(VOLT) 12H PHI-E(DEG)  8H H(VOLT)    DR100690
     X12H PHI-H(DEG) )                                                  DR100700
   85 CONTINUE                                                          DR100710
      DO 10 I=1,JIN                                                     DR100720
C     CALL PR(0)                                                        DR100730
C     WRITE(6,9)(TTABLE(I,J),J=1,5)                                     DR100740
    9 FORMAT(5F11.5)                                                    DR100750
   10 CONTINUE                                                          DR100760
```

```
C                                                                       DR100077
C     NOW TO CONSTRUCT 3 FUNCTIONS ,F,PHI,AND PHI PRIME                 DR100078
C                                                                       DR100079
      CALL CONST
C                                                                       DR100081
C     CALL PR(0)                                                        DR100082
C     WRITE(6,11)                                                       DR100083
   11 FORMAT(1H012HTHETA(RAD)  8H E(VOLT) 12H PHI=E(INCH) 8H H(VOLT)    DR100084
     X12H PHI=H(INCH) 10H F(WATT/A)  10H PHI(INCH), 15H PHIP(INCH/RAD)) DR100085
      DO 13 I=1,JIN                                                     DR100086
C     CALL PR(0)                                                        DR100087
C     WRITE(6,12)(TTABLE(I,J),J=1,8)                                    DR100088
   12 FORMAT(F12.9,7F10.6)                                              DR100089
   13 CONTINUE                                                          DR100090
C     ****************************************************************DR100091
C     END OF PHASE I ,START PHASE II                                    DR100092
C     ****************************************************************DR100093
C                                                                       DR100094
C     READ CASE HEADER AND ARGUMENTS                                    DR100095
C                                                                       DR100096
      WRITE(6,2080)
 2080 FORMAT(//19H ***INPUT NSKIP, I5//)
 1300 READ(5,2100) NSKIP,MULT
      WRITE(6,2061) NSKIP,MULT
C 130 FORMAT (20A4)                                                     DR100980
      WRITE(6,2090)
 2090 FORMAT(//34H ***INPUT A 1 FOR RUSCH OUTPUT, I5)
      WRITE(6,2095)
 2095 FORMAT(35H ***INPUT A 2 FOR PSCATT OUTPUT, I5)
      WRITE(6,3000)
 3000 FORMAT(34H ***INPUT A 3 FOR BOTH OUTPUTS, I5//)
      READ(5,2100) INTP
 2100 FORMAT(16I5)
      WRITE(6,2061) INTP
      P= INTP
      WRITE(6,2110)
 2110 FORMAT(//' ***INPUT XMAX,THETAMAX,SUB DIAM,XMIN,C,  5F10.5'//)
      READ(5,1310) XMAX,THEMAX,PPDIAM,XMIN,C,FREQ
      WRITE(6,2011) XMAX,THEMAX,PPDIAM,XMIN,C,FREQ
      WL=11.8028543/FREQ
      K= PPDIAM/2.0
 1310 FORMAT (6F10.4)
      WRITE(6,2120)
 2120 FORMAT(//31H ***INPUT A,DAMAX,DAMIN, 3F10.5//)
      READ (5,131)AN,DELAMX,DELAMN                                      DR101010
      WRITE(6,2011) AN,DELAMX,DELAMN
  131 FORMAT (3F10.4)                                                   DR101020
      LINE=0                                                            DR101030
      CALL PR(-1)                                                       DR101040
      WRITE(6,2125)
 2125 FORMAT(///)
      WRITE (6,132) XMAX,THEMAX,K,P,C                                   DR101050
  132 FORMAT (6H XMAX=F10.4,8H THEMAX=F10.4,3H K=F10.4,3H P=F4.1,3H C=F1DR101060
     X0.4)                                                               DR10107
      CALL PR(-1)                                                       DR101080
      WRITE (6,133) AN,DELAMX,DELAMN                                    DR101090
  133 FORMAT (11H A NOMINAL=F10.4,13H DELTA A MAX=F10.4,13H DELTA A MIN=DR101100
```

ORIGINAL PAGE IS OF POOR QUALITY

```
     XF10.4)                                                            DR101110
C     CALCULATE C2 AND SET OTHER CONSTANTS                              DR101120
      THEMAX=.0174532925*THEMAX                                         DR101130
      Y0=0.                                                             DR101140
      R0=K/SIN(THEMAX)                                                  DR101150
      CALL PR(-1)                                                       DR101160
      WRITE (6,1330) THEMAX,R0,Y0                                       DR101170
 1330 FORMAT(13H THEMAX(RAD)=F12.9,10H R0(INCH)=F12.4,9HY0(INCH)=F12.4) DR101180
      CALL CTWO(XMAX,XMIN,C2)
C
C
      CALL PR(-1)                                                       DR101200
      WRITE (6,134)C2                                                   DR101210
  134 FORMAT (1H ,10X,3HC2=E16.9)                                       DR101220
C     ******************************************************************DR101230
C     END PHASE II,START PHASE III                                      DR101240
C     ******************************************************************DR101250
C     TEST DELAMX=0, IF SO CALCULATE   CURVE FOR AN AND GO TO NEXT CASE.DR101260
      IF (DELAMX) 1341,1301,1341                                        DR101270
C     ******************************************************************DR101280
C     PHASE III-A                                                       DR101290
C     ******************************************************************DR101300
C                                                                       DR101310
C     FIND A=AN+N*DELAMX,SUCH THAT THE MAIN REFLECTOR WITH THIS A HAS   DR101320
C     LEAST RMS DEVIATION FROM NOMINAL MAIN REFLECTOR.                  DR101330
C                                                                       DR101340
 1341 CALL AOPT(AN,DELAMX,ABEST,RMS,B,NORMAX,NORMIN,MAXX,MAXY,MINX,MINY,DR101350
     XNOA)                                                              DR101360
      IF (NOA) 1340,1300,1340                                           DR101370
C     WRITE FIRST PASS RESULTS.                                         DR101380
 1340 CALL PR(-1)                                                       DR101390
      WRITE (6,135) ABEST,RMS,B                                         DR101400
  135 FORMAT (19H FIRST PASS. ABEST=F15.8,5H RMS=F15.8,3H B=F15.8)      DR101410
      DIFF=NORMAX-NORMIN                                                DR101420
      CALL PR(-1)                                                       DR101430
      WRITE (6,136) NORMAX,NORMIN,DIFF                                  DR101440
  136 FORMAT (13H NORMAL MAX.=F15.8,13H NORMAL MIN.=F15.8,21H PEAK-TO-  DR101450
     XPEAK MAX.=F15.8)                                                  DR101460
      CALL PR(-1)                                                       DR101470
      WRITE (6,137) MAXX,MAXY,MINX,MINY                                 DR101480
  137 FORMAT(10H MAX AT X=F10.4,3H Y=F10.4,10H MIN AT X=F10.4,3H Y=F10.4DR101490
     X)                                                                 DR101500
C                                                                       DR101510
C     FIND A=ABEST+N*DELAMN SUCH THAT RMS DEVIATION IS MINIMIZED.       DR101520
C                                                                       DR101530
      XABEST=ABEST                                                      DR101540
      CALL AOPT(XABEST,DELAMN,ABEST,RMS,B,NORMAX,NORMIN,MAXX,MAXY,MINX, DR101550
     XMINY,NOA)                                                         DR101560
      IF(NOA) 1370,1300,1370
C     ******************************************************************DR101580
C     END PHASE III START PHASE IV                                      DR101590
C     ******************************************************************DR101600
 1370 CALL PR(-1)                                                       DR101610
      WRITE (6,138) ABEST,RMS,B                                         DR101620
  138 FORMAT (20H FINAL  PASS. ABEST=F15.8,5H RMS=F15.8,3H B=F15.8)     DR101630
      DIFF=NORMAX-NORMIN                                                DR101640
      CALL PR(-1)                                                       DR101650
```

```
      WRITE (6,136) NORMAX,NORMIN,DIFF                                  DR10166(
      CALL PR(-1)                                                       DR10167(
      WRITE (6,137) MAXX,MAXY,MINX,MINY                                 DR10168(
C                                                                       DR10169(
C     CALL YOFX TO CALCULATE AND PRINT BEST CURVE                       DR10170(
C                                                                       DR10171(
      LINE=0                                                            DR10172(
      CALL YOFX(1  ,ABEST,B,NSKIP)                                      DR10173(
C     CALL POSTPR IF P IS NOT ZERO                                      DR10174(
      IF(INTP.EQ.1.OR.INTP.EQ.3) CALL POSTPR
C     ******************************************************************DR10176(
C     END PHASE IV. RETURN TO START OF PHASE II                         DR10177(
C     ******************************************************************DR10178(
      GO TO 1000                                                        DR10179(
C     ******************************************************************DR10180(
C     PHASE III-B                                                       DR10181(
C     ******************************************************************DR10182(
C                                                                       DR10183(
C     PROGRAM COMES TO THIS SECTION IF DELAMX=0,WHICH MEANS THAT NO BESTDR10184(
C     A IS TO BE FOUND, BUT RESULTS FOR AN ARE TO BE PRINTED.           DR10185(
C                                                                       DR10186(
C     FIND CURVE FOR AN                                                 DR10187(
 1301 CALL YOFX(0,AN,0.,NSKIP)                                          DR10188(
C     FIND B FOR SHIFTING YN                                            DR10189(
      CALL RMSB(B)                                                      DR10190(
      ABEST=AN                                                          DR10191(
C     CALCULATE THE ERRORS                                              DR10192(
      CALL RMSERR(B,RMS)                                                DR10193(
      CALL MAXMIN(NORMAX,NORMIN,MAXI,MINI,B)                            DR10194(
      MAXX=XSAV(MAXI)                                                   DR10195(
      MAXY=YSAV(MAXI)                                                   DR10196(
      MINX=XSAV(MINI)                                                   DR10197(
      MINY=YSAV(MINI)                                                   DR10198(
      GO TO 1370                                                        DR10199(
 6000 CONTINUE
C    NOW CLOSE FILE20=PSEUDO-PARABOLA OUTPUT &
C    FILE21=PSEUDO-HYPERBOLA OUTPUT AND QUIT
      ENDFILE 20
      ENDFILE 21
      STOP
      END                                                               DR102000
```

ORIGINAL PAGE IS
OF POOR QUALITY

```
      SUBROUTINE YOFX(XYPRFL,AN,B,NSKIP)
C                                                                       DR102030
C     THIS IS THE SUBROUTINE THAT DOES THE MAIN CALCULATIONS.           DR102040
C     THIS SUBR. FINDS THE MAINREFLECTOR FOR A GIVEN A.                 DR102050
C     THE X,Y CO-ORDS. ARE SAVED IN XSAV,YSAV,YDRSAV IF XYPRFL=0        DR102060
C     OTHERWISE RESULTS ARE PRINTED AS THEY ARE CALCULATED              DR102070
C     AS WAS DONE IN DAR                                                DR102080
C                                                                       DR102090
      EXTERNAL DERIV                                                    DR102100
C                                                                       DR102110
      COMMON/DERARG/A,C2,VAR(4),DER(4),EU(3),EL(3),TEMPS(41)            DR102120
      COMMON/AFTER/XSAV(1004),YSAV(1004),YDRSAV(1004),NOD,FNOD
      COMMON/FORGOT/XMAX,YO,XMIN                                        DR102140
      COMMON/CPOST/RAD(1004),RPR(1004),THPR(1004),THE(1004),C,P,MULT
      COMMON TTABLE(200,8),HEAD1(20),HEAD2(20),HEAD3(20),PAGE,LINE      DR102160
      COMMON JMAX,JO,JIN,IC1,IC2,RO,WL,THEMAX                           DR102170
C                                                                       DR102180
      EQUIVALENCE (X,VAR(1)),(THETA,VAR(2)),(Y,VAR(3)),(R,VAR(4)),      DR102190
     X(H,DER(1)),(THETAP,DER(2)),(YP,DER(3)),(RP,DER(4))                DR102200
C                                                                       DR102210
      INTEGER XYPRFL                                                    DR102220
      DIMENSION KQ(2),YNWORK(2),DTWORK(10,2),EP(2)
C                                                                       DR102230
C     SET INITIAL CONDITIONS FOR INTEGRATION OF DIFFERENTIAL EQUATIONS  DR102240
C                                                                       DR102250
      FMULT=1.0/MULT
      A=AN                                                              DR10226(
      HMAX=.008*THEMAX*FMULT
      HMIN=.000004*THEMAX*FMULT
      X=XMAX                                                            DR102290
      Y=YO                                                              DR10230(
      THETA=THEMAX                                                      DR102310
      THSTOP=.002*THEMAX*FMULT
      R=RO                                                              DR10232(
      CALL DERIV                                                        DR102330
      H=-.004*THEMAX*FMULT
      NEQ=2
      KD=1
      EP(1)=1.E-5
      DELTX=-.004*(XMAX-XMIN)*FMULT
      XNEW=XMAX
      CALL THOFX(XNEW+DELTX,THEXXX)
      DELT=THEXXX-THETA
      MXSTEP=7000*MULT
      TFINAL=-THEMAX
      CALL SVDQ(NEQ,THETA,VAR(3),DER(3),KD,EP,IFLAG,
     .H,HMIN,HMAX,DELT,TFINAL,MXSTEP,KSTEP,KEMAX,
     .EMAX,KQ,YNWORK,DTWORK)
      NOD=0                                                             DR102420
      IHCUT=0
```

```
      GOTO 212
C                                                                       DR102450
C     INTEGRATION LOOP                                                  DR102460
C                                                                       DR102470
   20 XNEW=XNEW+DELTX
      CALL DERIV
      CALL PHI(THETA,PHIA)                                              DR102500
      TEMP=X-R*SIN(THETA)                                               DR102510
      BETA=ATAN2(TEMP,Y+R*COS(THETA)-A)                                 DR102520
      IF(ABS(BETA).GE..0001) C1=R+PHIA+ TEMP/SIN(BETA) + Y
      IF(ABS(BETA).LE..0001) C1=2.*R+PHIA+2.*Y-A
      THETAD=57.2957795*THETA                                           DR102540
      BETAD=57.2957795*BETA                                             DR102550
C     SAVE                                                              DR102560
      NOD=NOD+1                                                         DR102570
      XSAV(NOD)=X                                                       DR102580
      YSAV(NOD)=Y                                                       DR102590
      YDRSAV(NOD)=YP*THETAP                                             DR102600
      DYDX=YDRSAV(NOD)
      DELX=X-XSAV(NOD-1)                                                DR102601
      DELY=Y-YSAV(NOD-1)                                                DR102602
      TANG=DELY/DELX                                                    DR102603
      IF(NOD.EQ.1) TANG=0.0                                             DR102604
      IF (XYPRFL) 200,210,200                                           DR102610
C     FIND YAAS AND EX AND PRINT EVERYTHING.                            DR102620
  200 CALL YN(X,YNOM)                                                   DR102630
 201  YAAS=YNOM+B                                                       DR102640
 202  CALL NORMER(NOD,EX,B)                                             DR102650
C     SAVE RESULTS FOR POSTPR                                           DR102660
      THE(NOD)=THETAD                                                   DR102670
      RAD(NOD)=R                                                        DR102680
      THPR(NOD)=THETAP                                                  DR102690
      RPR(NOD)=RP*THETAP                                                DR102700
C     PUNCH RESULTS IF P IS NOT ZERO.                                   DR102710
      IP= P                                                             DR102711
C     IF(IP.EQ.2)                                                       DR102712
C    XPUNCH 2030,NOD,X,Y,BETA,DYDX,YNOM,YAAS,EX                         DR102713
C2030 FORMAT(I10, 7F10.5)                                               DR102714
      IF(IP.GE.2) PUNCH 2020,X,Y,THETAD,R,BETAD,YAAS,EX                 DR102720
C ALSO PUNCH PSEUDO-PARABOLA ON FILE 20
      IF(IP.GE.2) WRITE(20,2020) X,Y,THETAD,R,BETAD,YAAS,EX
 2020 FORMAT (7F10.4)                                                   DR102730
 203  IF(NOD.EQ.1) CALL PR(1)
      IPRINT= 0
      IF(NOD.LE.10.OR.((NOD/NSKIP)*NSKIP.EQ.NOD)) IPRINT= 1
      IF(IPRINT.EQ.1) WRITE(6,21) X,Y,THETAD,R,C1,BETAD,YAAS,EX
     +  ,DYDX,TANG,BETA                                                 DR102751
   21 FORMAT( 8F10.4,10X,3F10.5)                                        DR102760
  210 IF(THETA.LE.-THSTOP) GOTO 25
      IF(XNEW.LT..5*DELTX+XMIN) GOTO 25
      IF(XNEW.LT.XMIN-.5*DELTX) XNEW=XMIN
      CALL THOFX(XNEW,THENEW)
      DELT=THENEW-THETA
  211 CALL SVDQ1
      IF(THETA.GE.0.) GOTO 212
C     WRITE(6,2115) THETA
C2115 FORMAT(' ****THETA .LT. 0.,   INTEGRATION TERMINATED...',E15.6)
```

```
C     GOTO 25
  212 GOTO(410,410,500,500,500,460,470,480),IFLAG
  410 CALL DERIV
C     IF(THETA.LT..002) WRITE(6,4101) VAR,DER
C4101 FORMAT(' VAR=',4E16.7/' DER=',4E16.7//)
      GOTO 211
  460 WRITE(6,465) KEMAX,EMAX,EP(1)
  465 FORMAT(' INTEGRATOR, IFLAG=6, KEMAX=',I1,' EMAX=',E12.5/
     .' EP(1)=',E12.5,' EP(1) WILL BE DOUBLED AGAIN...'/)
      EP(1)=2.*EP(1)
      GOTO 211
  470 CONTINUE
      IHCUT=IHCUT+1
      HMIN=HMIN*.5
      WRITE(6,475) IHCUT,HMIN
  475 FORMAT(' INTEGRATOR, IFLAG=7, FOR THE ',I2,'TH TIME STEP'/
     .' HMIN HAS BEEN CUT TO PRESERVE DESIRED ACCURACY HMIN=',E12.5/)
      IF(IHCUT.GE.10) STOP FLAG7
C     IF(THETA.LT..002) WRITE(6,4101) VAR,DER
      GOTO 211
  480 STOP FLAG8
  500 CONTINUE
      GOTO 20
   25 FNOD=NOD                                                    DR102870
      RETURN                                                      DR102880
      END                                                         DR102890
```

ORIGINAL PAGE IS
OF POOR QUALITY

```
      SUBROUTINE CTWO(XMAX,XMIN,C2)
C                                                                 DR105170
C     THIS SUBROUTINE COMPUTES THE DEFINITE INTEGRAL CALLED C2. THE  DR105180
C      METHOD USED IS THE TRAPEZOIDAL RULE. THE INTEGRAND IS      DR105190
C             F(THETA)SIN(THETA)DTHETA AND THE LIMITS ARE         DR105200
C         FROM THETA=THETA1 TO THETA MAX.                         DR105210
C                                                                 DR105220
      COMMON TTABLE(200,8),HEAD1(20),HEAD2(20),HEAD3(20),PAGE,LINE  DR105230
      COMMON JMAX,J0,JIN,IC1,IC2,R0,WL,THEMAX                     DR105240
      DIMENSION CTAB(200)
      DOUBLE PRECISION CTHI,CTHIM,STHI,STHIM,DTHI,DTHIM,DTH,DFTH,CCTHI
      DOUBLE PRECISION XSQ,XMINSQ
```

```
C                                                                       DR105250
      XMINSQ=XMIN**2
      C2=0.
      CTAB(1)=0.
      DO 20 I=2,JIN
      IF(TTABLE(I,1)-THEMAX) 19,21,21
   19 IM=I-1
      THI=TTABLE(I,1)
      THIM=TTABLE(IM,1)
      FTHI=TTABLE(I,6)
      FTHIM=TTABLE(IM,6)
      ASSIGN 17 TO IFROM
      GOTO 1000
   17 C2=C2+FAC
      CTAB(I)=C2
      IC2MAX=I
   20 CONTINUE
      WRITE(6,600) THEMAX,TTABLE(JIN,1)
  600 FORMAT(//' SRCTWO ERROR, THEMAX=',E15.7,' TTABLE(JI,,1)=',
     .E15.7//)
      STOP C2ERR
   21 CALL FPAT(THEMAX,FTHI,Z)
      IM=IM+1
      FTHIM=TTABLE(IM,6)
      THI=THEMAX
      THIM=TTABLE(IM,1)
      ASSIGN 22 TO IFROM
      GOTO 1000
   22 C2=C2+FAC
      IC2MAX=IC2MAX+1
      CTAB(IC2MAX)=C2
      C2=2.*C2/(XMAX**2-XMINSQ)
      WRITE(6,23) C2
   23 FORMAT(///' TRUE C2 = ',E15.7////)
      RETURN
 1000 DTHI=THI
      DTHIM=THIM
      DTH=DTHI-DTHIM
      IF(DTH.EQ.0.D0) FAC=0.
      IF(DTH.EQ.0.D0) GOTO IFROM
      DFTH=FTHI-FTHIM
      CTHI=DCOS(DTHI)
      STHI=DSIN(DTHI)
      CTHIM=DCOS(DTHIM)
      STHIM=DSIN(DTHIM)
      SCTHI=STHI-DTHI*CTHI
      SCTHIM=STHIM-DTHIM*CTHIM
      CCTHI=CTHIM-CTHI
      FAC=(FTHIM-THIM*DFTH/DTH)*CCTHI+
     .(DFTH/DTH)*(SCTHI-SCTHIM)
      GOTO IFROM
      ENTRY XOFTH(X,THETA)
C
C     FINDS X AS A FUNCTION OF THETA
C
      THI=THETA
      DTH=TTABLE(2,1)-TTABLE(1,1)
```

```
      IF(THETA.LT.0..OR.THETA.GT.THEMAX) STOP THEERR
      NTHET=(THETA-TTABLE(1,1))/DTH+1.
      GOTO 1030
 1020 NTHET=NTHET-1
 1030 IF(THETA-TTABLE(NTHET,1)) 1020,1040,1040
 1040 IF(THETA.LT.TTABLE(NTHET+1,1)) GOTO 1050
      NTHET=NTHET+1
      GOTO 1030
 1050 THIM=TTABLE(NTHET,1)
      CALL FPAT(THI,FTHI,Z)
      ASSIGN 1060 TO IFROM
      GOTO 1000
 1060 X=DSQRT(2.*(CTAB(NTHET)+FAC)/C2+XMINSQ)
      IF(X.GT.XMAX) X=XMAX
      IF(X.LT.XMIN) X=XMIN
      RETURN
      ENTRY THOFX(X,THETA)
C
C     FINDS THETA AS A FUNCTION OF X
C
      XSQ=X*X
      SMALLX=.001+XMIN
      XCNVRG=.0001
      IF(SMALLX.LT.X.AND.X.LT.XMAX) GOTO 1090
      IF(X.LE.XMIN) THETA=0.
      IF(X.GE.XMAX) THETA=THEMAX
      IF(X.LE.SMALLX) THETA=DSQRT((XSQ-XMINSQ)*C2/TTABLE(1,6))
      RETURN
 1090 ITR=0
      ITRMAX=100
      XIOLD=0.
      XERR=1.E-7
      CTABX=(XSQ-XMINSQ)*C2*.5
      IF(CTABX.GT.CTAB(IC2MAX)) CTABX=CTAB(IC2MAX)
      DO 1100 I=2,IC2MAX
      IF(CTABX.GT.CTAB(I)) GOTO 1100
      INDX=I
      GOTO 1110
 1100 CONTINUE
 1110 IM=INDX-1
C     WRITE(6,1111) INDX,IM
C1111 FORMAT(' ***INDX,IM=',2I6)
      THIM=TTABLE(IM,1)
      FTHIM=TTABLE(IM,6)
      XIM=SQRT(2*CTAB(IM)/C2+XMINSQ)
      THIN=THIM
      THIP=TTABLE(INDX,1)
      IF(INDX.EQ.IC2MAX) THIP=THEMAX
      XIP=SQRT(2.*CTAB(INDX)/C2+XMINSQ)
 1120 DIST=(X-XIM)/(XIP-XIM)
      THI=THIN+(THIP-THIN)*DIST
C     WRITE(6,1121) ITR,DIST,FAC,XIM,XIP,XI,THIN,THIP,THI
C1121 FORMAT(' ***ITR,DIST,FAC,XIM,XIP,XI,THIN,THIP,THI=',/
C    .I4,4E15.6/4X,4E15.6)
      CALL FPAT(THI,FTHI,Z)
C     WRITE(6,1122) ITR,THI,FTHI,THIM,FTHIM
C1122 FORMAT(' ***ITR,THI,FTHI,THIM,FTHIM=',/I4,4E15.6/)
```

```
      ASSIGN 1130 TO IFROM
      GOTO 1000
 1130 XI=SQRT(2.*(CTAB(IM)+FAC)/C2+XMINSQ)
C     WRITE(6,1123) ITR,XI,FAC,THI,FTHI,THIM,FTHIM
C1123 FORMAT(' ***ITR,XI,FAC,THI,FTHI,THIM,FTHIM='/I4,6E12.5/)
      ITR=ITR+1
      IF(ITR.GT.ITRMAX) GOTO 1170
      XIOLD=XI
      IF((X-XI).GT.XERR*X.AND.(X-XI).GT.XCNVRG) GOTO 1150
      IF((X-XI).LT.-XERR*X.AND.(X-XI).LT.-XCNVRG) GOTO 1160
      THETA=THI
      RETURN
 1150 XIM=XI
      THIN=THI
      GOTO 1120
 1160 XIP=XI
      THIP=THI
      GOTO 1120
 1170 WRITE(6,1180) ITR,X,XI,XIOLD,XERR
 1180 FORMAT(/' CTWO. ITR EXCEEDS ITRMAX, ITR,X,XI,XIOLD,XERR='/
     .I6,4E16.7/)
      THETA=THI
      IF(XIOLD.EQ.XI) RETURN
      STOP C2ERR
      END



      SUBROUTINE PHI(THETA,PHIA)
C                                                                       DR104940
C     THIS SUBROUTINE COMPUTES PHI(THETA)                               DR104950
C         BY LINEAR INTERPOLATION.                                      DR104960
C                                                                       DR104970
C                                                                       DR104980
      COMMON TTABLE(200,8),HEAD1(20),HEAD2(20),HEAD3(20),PAGE,LINE      DR104990
      COMMON JMAX,J0,JIN,IC1,IC2,R0,WL,THEMAX                           DR105000
C                                                                       DR105010
      IF(THETA-TTABLE(1,1))1,3,3                                        DR105020
    1 WRITE(6,2)THETA                                                   DR105030
    2 FORMAT(20H1 THETA OUT OF RANGE,F10.4)                             DR105040
      CALL EXIT                                                         DR105050
    3 IF(THETA-THEMAX)4,4,1                                             DR105060
    4 DO 5 I=1,JIN                                                      DR105070
      IF(THETA-TTABLE(I,1))5,6,6                                        DR105080
    5 CONTINUE                                                          DR105090
      GO TO 1                                                           DR105100
    6 PHIA=((THETA-TTABLE(I,1))/(TTABLE(I+1,1)-TTABLE(I,1)))*           DR105110
     X(TTABLE(I+1,7)-TTABLE(I,7))+TTABLE(I,7)                           DR105120
      RETURN                                                            DR105130
      END                                                               DR105140
```

```
      SUBROUTINE FPAT(A,U,V)
C                                                                       DR104620
C     THIS SUBROUTINE COMPUTES,AS FUNCTIONS OF THETA,                   DR104630
C       1. THE PATTERN FUNCTION,U=F(THETA),AND                          DR104640
C       2. THE PHASE FUNCTION DERIVATIVE,V=PHI PRIME(THETA)             DR104650
C         BY LINEAR INTERPOLATION                                       DR104660
C                                                                       DR104670
      COMMON TTABLE(200,8),HEAD1(20),HEAD2(20),HEAD3(20),PAGE,LINE      DR104680
      COMMON JMAX,J0,JIN,IC1,IC2,R0,WL,THEMAX                           DR104690
C                                                                       DR104700
      IF(A.GE.TTABLE(1,1))GO TO 2                                       DR104710
1     WRITE(6,10)A                                                      DR104720
      CALL EXIT                                                         DR104730
2     IF(A.LE.THEMAX)GO TO 4                                            DR104740
3     WRITE(6,11)A                                                      DR104750
      CALL EXIT                                                         DR104760
4     DO 5 I=1,JIN                                                      DR104770
      IF(A.LE.TTABLE(I,1)) GO TO 6                                      DR104780
5     CONTINUE                                                          DR104790
      GO TO 3                                                           DR104800
6     IF(A.NE.TTABLE(I,1))GO TO 7                                       DR104810
      U=TTABLE(I,6)                                                     DR104820
      V=TTABLE(I,8)                                                     DR104830
      RETURN                                                            DR104840
7     TEMP=(A-TTABLE(I-1,1))/(TTABLE(I,1)-TTABLE(I-1,1))                DR104850
      U=TEMP*(TTABLE(I,6)-TTABLE(I-1,6))+TTABLE(I-1,6)                  DR104860
      V=TEMP*(TTABLE(I,8)-TTABLE(I-1,8))+TTABLE(I-1,8)                  DR104870
      RETURN                                                            DR104880
10    FORMAT(1H1 16HTHETA TOO SMALL ,F10.6)                             DR104890
11    FORMAT(1H1 14HTHETA TOO BIG,F10.4)                                DR104900
      END                                                               DR104910
```

```
      SUBROUTINE AOPT(A,DELTA,SAVEA,SAVRMS,SAVEB,SAVMAX,SAVMIN,SAVMXX,  DR102910
     XSAVMXY,SAVMNX,SAVMNY,RTRNFL)
C                                                                       DR102930
C     THIS ROUTINE FINDS THAT VALUE OF A+N*DELTA FOR WHICH THE RMS ERRORDR102940
C     IS AT A LOCAL MINIMUM.  NOTE: RMS IS ROOT-MEAN-SQUARE ERROR WHEN  DR102950
C     COMPARED WITH YNOMINAL.                                           DR102960
C     DELTA IS ADDED TO OR SUBTRACTED FROM A IN THE DIRECTION OF DECREA-DR102970
C     SING RMS.  ONCE RMS INCREASES, THE PREVIOUS VALUE OF A IS RETURNEDDR102980
C     AS THE BEST VALUE OF A.                                           DR102990
C                                                                       DR103000
C                                                                       DR103010
      COMMON/AFTER/XSAV(1004),YSAV(1004),YDRSAV(1004),NOD,FNOD
C                                                                       DR103030
      INTEGER RTRNFL                                                    DR103040
      REAL NORMAX,NORMIN                                                DR103050
C                                                                       DR103060
C     WRITE COLUMN HEADER.                                              DR103070
C     CALL PR(-1)                                                       DR103080
```

```
      WRITE (6,1)                                                       DR103090
    1 FORMAT (83H        A     RMS ERROR  B SHIFT  MAX NORM  MIN NORM   MADR103100
     XX CO-ORDS      MIN CO-ORDS    )                                   DR103110
C                                                                       DR103120
C     SET UP FOR FIRST YOFX CALL                                        DR103130
C                                                                       DR103140
      ATRY=A                                                            DR103150
      CALL YOFX(0,ATRY,0.,NSKIP)                                        DR103160
C     FIND ALL ASSOCIATED ERRORS AND THE B SHIFT.                       DR103170
      CALL RMSB(B)                                                      DR103180
      CALL RMSERR(B,RMS)                                                DR103190
      CALL MAXMIN(NORMAX,NORMIN,MAXI,MINI,B)                            DR103200
C     SAVE EVERYTHING IN CASE THIS A IS OPTIMUM.                        DR103210
      SAVMXX=XSAV(MAXI)                                                 DR103220
      SAVMXY=YSAV(MAXI)                                                 DR103230
      SAVMNX=XSAV(MINI)                                                 DR103240
      SAVMNY=YSAV(MINI)                                                 DR103250
      SAVEA=ATRY                                                        DR103260
      SAVEB=B                                                           DR103270
      SAVRMS=RMS                                                        DR103280
      SAVMAX=NORMAX                                                     DR103290
      SAVMIN=NORMIN                                                     DR103300
C     PRINT ALL DATA THIS A.  A,RMS,B, NORMAX,NORMIN,MAX AND MIN CO-ORDSDR103310
      CALL PR(-1)                                                       DR103320
      WRITE (6,2) ATRY,RMS    ,B,NORMAX,NORMIN,XSAV(MAXI),YSAV(MAXI),   DR103330
     XXSAV(MINI),YSAV(MINI)                                             DR103340
    2 FORMAT (1H ,5F10.4,4F8.2)                                         DR103350
C                                                                       DR103360
C     SET UP FOR SECOND CALL TO YOFX WITH  A+DELTA.                     DR103370
C                                                                       DR103380
      ATRY=A+DELTA                                                      DR103390
      CALL YOFX(0,ATRY,0.,NSKIP)                                        DR103400
C     FIND ALL ASSOCIATED ERRORS AND B                                  DR103410
      CALL RMSB(B)                                                      DR103420
      CALL RMSERR(B,RMS)                                                DR103430
      CALL MAXMIN(NORMAX,NORMIN,MAXI,MINI,B)                            DR103440
C     PRINT DATA THIS TRY.  A,RMS,B, NORMAX,NORMIN,MAX AND MIN CO-ORDS. DR103450
      WRITE (6,2) ATRY,RMS    ,B,NORMAX,NORMIN,XSAV(MAXI),YSAV(MAXI),XSAVDR103460
     X(MINI),YSAV(MINI)                                                 DR103470
C                                                                       DR103480
C     FIND DIRECTION OF CURVE A VS. RMS, PROCEED WITH LOOP BY INCREMEN- DR103490
C     TING A IN DIRECTION OF DECREASING RMS ERROR.                      DR103500
C     STOP LOOP WHEN RMS ERROR STARTS INCREASING -- THIS MEANS OPTIMUM  DR103510
C     A HAS BEEN FOUND                                                  DR103520
C                                                                       DR103530
C     SET UP LOOP INDEX                                                 DR103540
      FI=3.                                                             DR103550
C     TEST FOR DIRECTION OF DECREASING RMS ERROR.                       DR103560
      IF (RMS.GT.SAVRMS) GO TO 4                                        DR103570
C     INCREASE A TO DECREASE RMS ERROR                                  DR103580
      IFLAG=1                                                           DR103590
C     SAVE NEW SET OF DATA AND ERRORS                                   DR103600
      SAVEA=ATRY                                                        DR103610
      SAVEB=B                                                           DR103620
      SAVRMS=RMS                                                        DR103630
      SAVMAX=NORMAX                                                     DR103640
      SAVMIN=NORMIN                                                     DR103650
```

```
      SAVMXX=XSAV(MAXI)                                                 DR103660
      SAVMXY=YSAV(MAXI)                                                 DR103670
      SAVMNX=XSAV(MINI)                                                 DR103680
      SAVMNY=YSAV(MINI)                                                 DR103690
C     INCREMENT A                                                       DR103700
    3 ATRY=A+(FI-1.)*DELTA                                              DR103710
      GO TO 6                                                           DR103720
C     DECREASE A TO DECREASE RMS ERROR.                                 DR103730
    4 IFLAG=0                                                           DR103740
C     INCREMENT A                                                       DR103750
    5 ATRY=A-(FI-2.)*DELTA                                              DR103760
C     FIND CURVE FOR ATRY                                               DR103770
    6 CALL YOFX(0,ATRY,0.,NSKIP)                                        DR103780
C     CALCULATE AND PRINT THE ERRORS AND B                              DR103790
      CALL RMSB(B)                                                      DR103800
      CALL RMSERR(B,RMS)                                                DR103810
      CALL MAXMIN(NORMAX,NORMIN,MAXI,MINI,B)                            DR103820
      WRITE (6,2) ATRY,RMS,B,NORMAX,NORMIN,XSAV(MAXI),YSAV(MAXI),XSAV(MIDR103830
     XNI),YSAV(MINI)                                                    DR103840
C     INCREMENT FI FOR LOOP                                             DR103850
      FI=FI+1.                                                          DR103860
C     IS FI TOO LARGE                                                   DR103870
      IF (FI.GT.20.) GO TO 8                                            DR103880
C     HAS THE OPTIMUM A BEEN PASSED, ARE THE RMS ERRORS INCREASING AGAINDR103890
      IF (RMS.GT.SAVRMS) GO TO 7                                        DR103900
C     SAVE THE NEW ERRORS,A,B                                           DR103910
      SAVEA=ATRY                                                        DR103920
      SAVEB=B                                                           DR103930
      SAVRMS=RMS                                                        DR103940
      SAVMAX=NORMAX                                                     DR103950
      SAVMIN=NORMIN                                                     DR103960
      SAVMXX=XSAV(MAXI)                                                 DR103970
      SAVMXY=YSAV(MAXI)                                                 DR103980
      SAVMNX=XSAV(MINI)                                                 DR103990
      SAVMNY=YSAV(MINI)                                                 DR104000
C     GO TO 3 TO INCREAS A, GO TO 5 TO DECREASE A.                      DR104010
      IF (IFLAG) 3,5,3                                                  DR104020
C     ABEST HAS BEEN FOUND,SET RETURN  FLAG                             DR104030
    7 RTRNFL=1                                                          DR104040
      GO TO 10                                                          DR104050
C     ERROR -- NO OPTIMUM A FOUND AFTER 20 INCREMENTS.                  DR104060
    8 WRITE (6,9)                                                       DR104070
    9 FORMAT (69H NO OPTIMUM A FOUND AFTER 20 INCREMENTS,CONTINUE WITH  DR104080
     XNEXT ANOMINAL.)                                                   DR104090
C     SET FLAG FOR RETURN                                               DR104100
      RTRNFL=0                                                          DR104110
   10 RETURN                                                            DR104120
      END                                                               DR104130
```

```
      SUBROUTINE PR(SW)
      SUBROUTINE PR(SW)                                                 DR105700
C     THIS SUBROUTINE PRINTS MAINHEADER AND PAGE NUMBER FOR EACH PAGE   DR105710
C          ALSO PRINTS ASEARCH HEADER IF SW=-1 OR +1                    DR105720
C          AND PRINTS COLUMN HEADER IF SW=+1                            DR105730
C          TO BE ENTERED J TIMES BEFORE A BLOCK OF J LINES ARE TO       DR105740
C           BE PRINT                                                    DR105750
C                                                                       DR105760
      COMMON TTABLE(200,8),HEAD1(20),HEAD2(20),HEAD3(20),PAGE,LINE      DR105770
      COMMON JMAX,J0,JIN,IC1,IC2,R0,WL,THEMAX                           DR105780
      INTEGER SW,PAGE                                                   DR105790
C                                                                       DR105800
      LINE=LINE+1                                                       DR105810
      L=MOD(LINE,50)                                                    DR105820
      IF(L.EQ.1) GO TO 1                                                DR105830
   10 RETURN                                                            DR105840
    1 PAGE=PAGE+1                                                       DR105850
C     WRITE(6,2)HEAD1,PAGE                                              DR105860
    2 FORMAT(1H1,20A4,8H   PAGE ,I3)                                    DR105870
C     WRITE(6,3)                                                        DR105880
    3 FORMAT(1H0)                                                       DR105890
      LINE=LINE+2                                                       DR105900
C     IF (SW) 30,10,30                                                  DR105910
C   30 WRITE (6,31) HEAD3                                               DR105920
   31 FORMAT (1H0,20A4//)                                               DR105930
      LINE=LINE+3                                                       DR105940
      IF (SW+1) 4,10,4                                                  DR105950
    4 WRITE(6,2000)
 2000 FORMAT(///)
      WRITE(6,5)
    5 FORMAT (80H X(INCH) Y(INCH) THETA(DEG) RADIUS(INCH) C1(INCH) BETA(DR105970
     XDEG) YAAS(INCH)  EX(INCH))                                        DR105980
C     WRITE(6,6)                                                        DR105990
    6 FORMAT(1H )                                                       DR106000
      LINE=LINE+3                                                       DR106010
      RETURN                                                            DR106020
      END                                                               DR106030


      SUBROUTINE RMSERR(B,RMS)
C                                                                       DR106320
C     THIS SUBROUTINE FINDS THE NORMAL ROOT MEAN SQUARE DIFFERENCE      DR106330
C     BETWEEN Y(X) AND YN(X)+B  .                                       DR106340
C                                                                       DR106350
C                                                                       DR106360
      COMMON/AFTER/XSAV(1004),YSAV(1004),YDRSAV(1004),NOD,FNOD
C                                                                       DR106380
      RMS=0.                                                            DR106390
      DO 1 I=1,NOD                                                      DR106400
      CALL NORMER(I,EX,B)                                               DR106410
    1 RMS=RMS+EX**2                                                     DR106420
      RMS=SQRT(RMS/FNOD)                                                DR106430
      RETURN                                                            DR106440
      END                                                               DR106450
```

```
      SUBROUTINE MAXMIN(NORMAX,NORMIN,MAXI,MINI,B)
C                                                                       DR106680
C     THIS SUBROUTINE FINDS THE MAXIMUM POSITIVE AND NEGATIVE NORMAL    DR106690
C     DISTANCES FROM YN(X) THAT Y(X) ATTAINS AND THE COORDINATES ON Y(X)DR106700
C     AT THESE MAXIMUM DISTANCES.                                       DR106710
C                                                                       DR106720
      COMMON/AFTER/XSAV(1004),YSAV(1004),YDRSAV(1004),NOD,FNOD
C                                                                       DR106740
      REAL NORMAX,NORMIN                                                DR106750
      DENOM=0.                                                          DR106760
C     FIND THE SORMAL DIFFERENCE AT X(1).                               DR106770
      CALL NORMER(1,EX,B)                                               DR106780
C     INITIALIZE NORMAX,NORMIN,MAXI,MINI                                DR106790
      NORMAX=EX                                                         DR106800
      NORMIN=EX                                                         DR106810
      MINI=1                                                            DR106820
      MAXI=1                                                            DR106830
C                                                                       DR106840
C     DO LOOP TO FIND MAXIMUMS.                                         DR106850
C                                                                       DR106860
      DO 1 I=1,NOD                                                      DR106870
      CALL NORMER(I,EX,B)                                               DR106880
      IF (EX.GT.NORMAX) GO TO 2                                         DR106890
      IF (EX.GT.NORMIN) GO TO 1                                         DR106900
      NORMIN=EX                                                         DR106910
      MINI=I                                                            DR106920
      GO TO 1                                                           DR106930
    2 NORMAX=EX                                                         DR106940
      MAXI=I                                                            DR106950
    1 CONTINUE                                                          DR106960
      RETURN                                                            DR106970
      END                                                               DR106980


      SUBROUTINE RMSB(B)
C                                                                       DR106480
C     FINDS OPTIMUM SHIFT B, SUCH THAT THE NORMAL RMS DEVIATION IS LEASTDR106490
C                                                                       DR106500
C                                                                       DR106510
      COMMON/AFTER/XSAV(1004),YSAV(1004),YDRSAV(1004),NOD,FNOD
      COMMON/ALWAYS/XNMAX,YNMAX                                         DR106530
C                                                                       DR106540
      DENOM=0.                                                          DR106550
      BNUM=0.                                                           DR106560
      DO 1 I=1,NOD                                                      DR106570
      CALL YN(XSAV(I),YNOM)                                             DR106580
      YNPRI=-2.*YNMAX*XSAV(I)/XNMAX**2                                  DR106590
      FX=SQRT(1.+YNPRI**2)/(1.+YNPRI*YDRSAV(I))                         DR106600
      BNUM=BNUM+(YSAV(I)-YNOM)*FX**2                                    DR106610
    1 DENOM=DENOM+FX**2                                                 DR106620
      B=BNUM/DENOM                                                      DR106630
      RETURN                                                            DR106640
      END                                                               DR106650
```

```
      SUBROUTINE CONST
C                                                                       DR104160
C     THIS SUBROUTINE CONSTRUCTS THE 3 FUNCTIONS                        DR104170
C                F(THETA),PHI(THETA), AND PHI PRIME (THETA)             DR104180
C         FROM THE INPUT DATA, AS WELL AS TRANSFORMING THE INPUT        DR104190
C           TO THE PROPER UNITS.                                        DR104200
C                                                                       DR104210
C                                                                       DR104220
      COMMON TTABLE(200,8),HEAD1(20),HEAD2(20),HEAD3(20),PAGE,LINE      DR104230
      COMMON JMAX,J0,JIN,IC1,IC2,R0,WL,THEMAX                           DR104240
C                                                                       DR104250
      DO 4 I=1,JIN                                                      DR104260
      TTABLE(I,1)=TTABLE(I,1)*.0174532925                               DR104270
      IF(IC1)1,1,2                                                      DR104280
    1 TEMP1=10.**(TTABLE(I,2)/20.)                                      DR104290
      TEMP2=10.**(TTABLE(I,4)/20.)                                      DR104300
      TTABLE(I,2)=TEMP1                                                 DR104310
      TTABLE(I,4)=TEMP2                                                 DR104320
      GO TO 3                                                           DR104330
    2 TEMP1=TTABLE(I,2)                                                 DR104340
      TEMP2=TTABLE(I,4)                                                 DR104350
    3 TTABLE(I,6)=(TEMP1**2.+TEMP2**2.)/2.                              DR104360
      IF(IC2.GT.0) GO TO 35                                             DR104370
      TTABLE(I,3)=TTABLE(I,3)*WL/360.                                   DR104380
      TTABLE(I,5)=TTABLE(I,5)*WL/360.                                   DR104390
      TTABLE(I,7)=(TTABLE(I,3)+TTABLE(I,5))/2.                          DR104400
      GO TO 4                                                           DR104410
   35 TTABLE(I,7)=0.                                                    DR104420
      TTABLE(I,3)=0.                                                    DR104430
      TTABLE(I,5)=0.                                                    DR104440
    4 CONTINUE                                                          DR104450
C                                                                       DR104460
C     NOW TO COMPUTE PHI PRIME (TABLE OF DERIV.)                        DR104470
C     NOTE WELL=====THETA ASSUMMED TO BE EQUALLY SPACED=====            DR104480
C                                                                       DR104490
      U=1./(2.*(TTABLE(2,1)-TTABLE(1,1)))                               DR104500
      TTABLE(1,8)=U*(-TTABLE(3,7)+4.*TTABLE(2,7)-3.*TTABLE(1,7))        DR104510
      TTABLE(JIN,8)=U*(3.*TTABLE(JIN , 7)-4.*TTABLE(JIN-1,7)+TTABLE     DR104520
     X(JIN-2,7))                                                        DR104530
      K=JIN-1                                                           DR104540
      DO 5 I=2,K                                                        DR104550
      TTABLE(I,8)=U*(TTABLE(I+1,7)-TTABLE(I-1,7))                       DR104560
    5 CONTINUE                                                          DR104570
      RETURN                                                            DR1045
      END                                                               DR104590
```

```
      SUBROUTINE DERIV
C     SYSTEM OF  2 SIMULTANEOUS DIFFERENTIAL EQUATIONS                  DR105430
C         INDEPENDENT VARIABLE IS THETA                                 DR105440
C         DEPENDENT VARIABLES ARE Y AND R                               DR105450
C                                                                       DR105460
      COMMON/DERARG/A,C2,VAR(4),DER(4),EU(3),EL(3),TEMPS(41)            DR105470
      COMMON TTABLE(200,8),HEAD1(20),HEAD2(20),HEAD3(20),PAGE,LINE      DR105480
      COMMON JMAX,J0,JIN,IC1,IC2,R0,WL,THEMAX                           DR105490
C                                                                       DR105500
      EQUIVALENCE(X,VAR(1)),(THETA,VAR(2)),(Y,VAR(3)),(R,VAR(4)),       DR105510
     X(H,DER(1)),(THETAP,DER(2)),(YP,DER(3)),(RP,DER(4))                DR105520
C                                                                       DR105530
C                                                                       DR105540
C                                                                       DR105550
      THESAV=THETA
      IF(THETA.LT.0.) THETA=0.
      TEMP=SIN(THETA)                                                   DR105560
      CALL XOFTH(X,THETA)
      BETA=ATAN2(X-R*TEMP,Y+R*COS(THETA)-A)                             DR105570
C                                                                       DR105580
      CALL FPAT(THETA,FPATA,PHIPR)                                      DR105590
C                                                                       DR105600
C                                                                       DR105620
      YPFAC=0.
      IF(X.LE..0003) YPFAC=SQRT(TTABLE(1,6)/C2)
      IF(X.GT..0003) YPFAC=FPATA*TEMP/(C2*X)
      THETAP=1.E+10
      IF(YPFAC.NE.0.) THETAP=1./YPFAC
      YP=-TAN(BETA/2.)*YPFAC                                            DR105630
      RP=R*TAN((BETA+THETA)/2.)-PHIPR/(1.+COS(BETA-THETA))              DR105650
C                                                                       DR105660
      THETA=THESAV
      RETURN                                                            DR105670
      END                                                               DR105680


      SUBROUTINE NORMER(I,EX,B)
C                                                                       DR106060
C     THIS SUBROUTINE FINDS THE NORMAL DISTANCE FROM YN AT A POINT I ON DR106070
C     Y.                                                                DR106080
C                                                                       DR106090
C                                                                       DR106100
      COMMON/AFTER/XSAV(1004),YSAV(1004),YDRSAV(1004),NOD,FNOD
      COMMON/ALWAYS/XNMAX,YNMAX                                         DR106120
C                                                                       DR106130
      CALL YN(XSAV(I),YNOM)                                             DR106140
      YNPRI=-2.*YNMAX*XSAV(I)/XNMAX**2                                  DR106150
      EX= (YSAV(I)-YNOM-B)    *SQRT(YNPRI*YNPRI+1.)/(1.+YDRSAV(I)*YNPRI)DR106160
      RETURN                                                            DR106170
      END                                                               DR106180
```

```
      SUBROUTINE POSTPR
C                                                                       DR108910
C     THIS IS THE POST-PROCESSOR COMTROL SUBROUTINE.                    DR108920
C     AFTER PUNCHING THREE HEADER CARDS, DECK2, DECK3, AND DECK4 ARE    DR108930
C     CALLED TO PUNCH VARIOUS DECKS.                                    DR108940
C                                                                       DR108950
      COMMON TTABLE(200,8),HEAD1(20),HEAD2(20),HEAD3(20),PAGE,LINE      DR108960
      COMMON JMAX,J0,JIN,IC1,IC2,R0,WL,THEMAX                           DR108970
C                                                                       DR108980
      PUNCH 1,HEAD1,HEAD2                                               DR108990
    1 FORMAT (20A4)                                                     DR109000
      CALL DECK2                                                        DR109010
      RETURN                                                            DR109040
      END                                                               DR109050
```

```
      SUBROUTINE DECK2
C                                                                       DR109080
C     THIS SUBROUTINE IS CALLED BY POSTPR TO PUNCH 3 DECKS WITH 100     DR109090
C     VALUES EACH WHERE ALL VALUES ARE FUNCTIONS OF THETA, WHERE THETA  DR109100
C     VARIES AS UNIFORMLY AS POSSIBLE OVER THE RANGE 0-THEMAX.          DR109110
C     THE VALUES USED TO CALCULATE THE PUNCHED VALUES ARE THE RESULTS   DR109120
C     FROM THE FINAL INTEGRATION.                                       DR109130
C     DECK21 CONTAINS  -1/R                                             DR109140
C     DECK22 CONTAINS  RPR/(THEPR*R**2)                                 DR109150
C     DECK23 CONTAINS  THEBAR=PI-THETA                                  DR109160
C                                                                       DR109170
      COMMON/AFTER/XSAV(1004),YSAV(1004),YDRSAV(1004),NOD,FNOD
      COMMON/CPOST/RAD(1004),RPR(1004),THPR(1004),THE(1004),C,P,MULT
C                                                                       DR109200
      DIMENSION DECK21(100),DECK22(100),DECK23(100)                     DR109210
C
C
      PI=3.1415927
      DO 100 IX=1,100
      IF(IX.LE.12) I=252-IX
```

```
      IF(IX.EQ.13) I=238
      IF(IX.GE.14.AND.IX.LE.87) I=236-3*(IX-14)
      IF(IX.EQ.88) I=15
      IF(IX.EQ.89) I=13
      IF(IX.GE.90) I=101-IX
      I=I*MULT-(MULT-1)
      DECK21(IX)=-1./RAD(I)
      DECK22(IX)=-RPR(I)/(THPR(I)*RAD(I)**2)
  100 DECK23(IX)=PI-THE(I)*.0174532925
C                                                                       DR109600
C     PUNCH THE THREE DECKS AND RETURN                                  DR109610
C ALSO PUNCH PSEUDO-HYPERBOLA ON FILE 21
C                                                                       DR109620
      PUNCH 2, (DECK21(J),J= 1,100)
      WRITE(21,2) (DECK21(J),J= 1,100)
      PUNCH 2, (DECK22(J),J= 1,100)
      WRITE(21,2) (DECK22(J),J= 1,100)
      PUNCH 2, (DECK23(J),J= 1,100)
      WRITE(21,2) (DECK23(J),J= 1,100)
      WRITE(6,200)
  200 FORMAT(1H1)
      WRITE(6,210) (DECK21(J),J=1,100)
      WRITE(6,210) (DECK22(J),J=1,100)
      WRITE(6,210) (DECK23(J),J=1,100)
  210 FORMAT(1X,E15.8,1X,E15.8,1X,E15.8,1X,E15.8,1X,E15.8)
    2 FORMAT (5E15.8)                                                   DR109640
      RETURN                                                            DR109650
      END                                                               DR109660
```

```
      SUBROUTINE YN(X,YNOM)
C                                                                       DR106210
C     THIS ROUTINE CALCULATES YN(X)     (Y NOMINAL)                     DR106220
C                                                                       DR106230
C                                                                       DR106240
      COMMON/ALWAYS/XNMAX,YNMAX                                         DR106250
C                                                                       DR106260
      YNOM=YNMAX*(1.-(X/XNMAX)**2)                                      DR106270
      RETURN                                                            DR106280
      END                                                               DR106290
```

APPENDIX B

The Program for Phase Adjustment of Scattered Pattern for Efficiency Calculations

Following is a listing of the program that performs the alterations of phase on the subreflector scattered pattern so that it may be used with programs which calculate the feed efficiency for paraboloids. Refer to figure 3-1 within the test for a more complete description of the input parameters.

The "SHAPERPHASE" Program

```
C
C A PROGRAM FOR PHASE 'CORRECTION' OF THE SCATTERED FIELDS FROM A SHAPED
C SUB'REFLECTOR -- TAKING OUT THE VARIATION FROM SHAPING BUT LEAVING IN
C TACT THE RIPPLE FROM PHYSICAL OPTICS. THIS IS DONE FOR USING THE RESULT
C IN THE EFFICIENCY PROGRAM WHICH ASSUMES A PARABOLA.
C
C
C   W. F. WILLIAMS, DECEMBER, 1977
```

ORIGINAL PAGE IS
OF POOR QUALITY

```
C
C   FREQ= FREQUENCY IN MEGAHERTZ. B= THE Y DIMENSION, GIVEN AS A POSITIVE
C NUMBER FROM THE ORIGIN( BELOW REFLECTOR EDGE) TO THE SCATTERED PATTERN
C PHASE CENTER*I.E.* THE QUASI-PARABOLOID FOCUS.  IPUNCH=0 FOR A PUNCHED
C OUPPUT FOR THE EFFICIENCY PROGRAM. JMAX=THE NUMBER OF INPUT ANGLES OF
C SCATTERED DATA. IC1=1, (INPUT IN VOLTS.)
C SUMR=0.0, NOT USED. BLK=0.0, NOT USED
C Y(N) AND X(N) ARE THE COORDINATES OF THE MAIN SHAPED
C REFLECTOR. BETA(N) IS THE ANGLE(DEGREES) BETWEEN THE
C SUBREFLECTOR REFLECTED RAY AND THE REFLECTOR AXIS.
C ALL DIMENSIONS IN INCHES (B, X(N), Y(N) )
C INPUT PATTERN IN DEGREES(THETA), VOLTS (ET AND HT)
C AND DEGREES PHASE (ETP AND HTP)
C
C
C    ******INPUT DECK******
C   1  FREQ, B, IPUNCH      (2F10.5,I5)
C   2  TITLE1      (10A4)
C   3  TITLE2      (20A4)
C   4  JMAX,IC1  (2I5)
C   5  SUMR,BLK    (8F10.5)
C   6  THETA(J),ET(J), ETP(J), HT(J), HTP(J),      (8F10.5)
C    ETC   ***
C   X(N), Y(N), BETA(N)       (8F10.5)
C   *   ETC  **
C
C
C    ** PUNCHED OUTPUT ***
C   1. TITLE1                            (10A4)
C   2. TITLE2                            (20A4)
C   3. JMAX, IC1                         (2I5)
C   4. SUMR, BLK                         (E15.8,5X,F10.5)
C   5. THETA(J),ET(J),ETP(J),HT(J),HTP(J)  (8F10.5)
C   6.  ****ETC****
C
C
      DIMENSION THETA(721), ET(721), ETP(721), HT(721), HTP(721)
      DIMENSION X(1004), Y(1004), BETA(1004)
      DIMENSION TITLE1(10), TITLE2(20)
      PI=3.141592654
      CONV=PI/180.0
      CINCH=11.8028526
     READ(5,140) FREQ, B, IPUNCH
  140 FORMAT(2F10.5,I5)
      READ (5,100) TITLE1
  100  FORMAT (10A4)
      READ (5,110) TITLE2
  110  FORMAT (20A4)
     READ (5,120) JMAX, IC1
  120 FORMAT (2I5)
     READ (5,150) SUMR, BLK
  150 FORMAT (E15.8,5X,F10.5)
     SUMR=0.0
     WRITE(6,250) TITLE1
  250 FORMAT(1H1,10A4,/)
     WRITE(6,230) FREQ, B
  230 FORMAT(5X,5HFREQ=F10.5,3X,2HB=F10.5,/)
```

ORIGINAL PAGE IS
OF POOR QUALITY

ORIGINAL PAGE IS
OF POOR QUALITY

```
      IF(IPUNCH.GT.0) GO TO 20
       PUNCH 100, TITLE1
       PUNCH 110, TITLE2
      PUNCH 120, JMAX, IC1
      PUNCH 150, SUMR, BLK
 20    CONTINUE
       DO 5 J=1, JMAX
  5    READ(5,130) THETA(J),ET(J),ETP(J),HT(J),HTP(J)
130   FORMAT(8F10.5)
      N=1
 21   READ(5,160,END=10) X(N), Y(N), BETA(N)
160   FORMAT(2F10.5,20X,F10.5)
      N=N+1
      GO TO 21
 10   NMAX=N-1
       WVL=CINCH/FREQ
      THEONE=ATAN(X(1)/(B+Y(1)))
      THEONE=THEONE/CONV
      R=SQRT((B+Y(1))**2+X(1)**2)
      WRITE(6,240)  R, THEONE, NMAX
240   FORMAT(5X,2HR=F10.5,4X,10HTHETANMAX=F10.5,4X,5HNMAX=I4)
      WRITE(6,260)
260   FORMAT(//10X,1HN,7X,4HX(N),10X,4HY(N),10X,7HBETA(N),/)
      DO 30 N=1,NMAX
      WRITE(6,270) N, X(N), Y(N), BETA(N)
 30   BETA(N)=BETA(N)*CONV
270   FORMAT(7X,I5,3X,F10.5,5X,F10.5,5X,F10.5)
       WRITE(6,200)
200   FORMAT(//10X,14H INPUT PATTERN,//14X,5HTHETA,12X,2HET,12X,3HETP,
     *14X,2HHT,11X,3HHTP,/)
       DO 15 J=1, JMAX
       WRITE(6,210) THETA(J), ET(J),ETP(J),HT(J),HTP(J)
 15    THETA(J)=THETA(J)*CONV
210   FORMAT(10XF10.5,5XF10.5,5XF10.5,5XF10.5,5XF10.5)
       WRITE(6,220)
220   FORMAT(//10X,14HOUTPUT PATTERN,//6X,5HTHETA,8X,2HET,9X,3HETP,
     *9X,2HHT,8X,3HHTP,7X,1HN,5X,2HNN,7X,7HBETA(N),6X,8HBETA(NN),
     *5X,5HBETAJ,/)
      THETAX=ATAN(X(NMAX)/(Y(NMAX)+B))
      J=1
 95   IF(THETA(J).GT.THETAX) GO TO 105
      J=J+1
      GO TO 95
105   JSAVE=J
      NMX=NMAX-1
 85   DO 35 N=NMX,1,-1
       THETAN=ATAN(X(N)/(Y(N)+B))
       IF(THETAN.GT.THETA(J)) GO TO 25
       GO TO 35
 25    NN=N+1
      THETNN=ATAN(X(NN)/(Y(NN)+B))
      YBN=Y(N)+B
      FN=(YBN+SQRT(X(N)*X(N)+YBN*YBN))/2.0
      YBNN=Y(NN)+B
      FNN=(YBNN+SQRT(X(NN)*X(NN)+YBNN*YBNN))/2.0
      TK=(THETAN-THETA(J))/(THETAN-THETNN)
      FJ=FN-((FN-FNN)*TK)
```

```
      HJ=FJ/(COS(THETA(J)/2.0)**2)
      YJ=HJ*COS(THETA(J))-B
      XJ=HJ*SIN(THETA(J))
      BETAJ=BETA(N)-(THETAN-THETA(J))*(BETA(N)-BETA(NN))/(THETAN-THETNN)
      DO 26 I=1,JMAX
      IF(BETAJ.LT.THETA(I)) GO TO 27
   26 CONTINUE
   27 II=I-1
      FRAC=(BETAJ-THETA(II))/(THETA(I)-THETA(II))
      ET(J)=ET(II)+FRAC*(ET(I)-ET(II))
      HT(J)=HT(II)+FRAC*(HT(I)-HT(II))
      IF(ETP(II).LT.0.0.AND.ETP(I).GT.0.0) ETP(II)=ETP(II)+360.0
      IF(HTP(II).LT.0.0.AND.HTP(I).GT.0.0) HTP(II)=HTP(II)+360.0
      ETP(J)=ETP(II)+FRAC*(ETP(I)-ETP(II))
      HTP(J)=HTP(II)+FRAC*(HTP(I)-HTP(II))
      IF(ETP(J).GT.180.0) ETP(J)=ETP(J)-360.0
      IF(HTP(J).GT.180.0) HTP(J)=HTP(J)-360.0
      ZJ=B+YJ-XJ/TAN(BETAJ)
      DELR=R-XJ/SIN(BETAJ)-ZJ*COS(BETAJ)
      DELD=DELR-YJ
      DELLAM=DELD/WVL
       K=DELLAM
       DELDEG=(DELLAM-K)*360.0
      ETP(J)=ETP(J)+DELDEG
      HTP(J)=HTP(J)+DELDEG
      IF(ETP(J).LT.-180.0) ETP(J)=ETP(J)+360.0
      IF(HTP(J).LT.-180.0) HTP(J)=HTP(J)+360.0
      IF(ETP(J).GT.180.0) ETP(J)=ETP(J)-360.0
      IF(HTP(J).GT.180.0) HTP(J)=HTP(J)-360.0
       THETA(J)=THETA(J)/CONV
      BETA(N)=BETA(N)/CONV
      BETA(NN)=BETA(NN)/CONV
      BETAJ=BETAJ/CONV
      IF(J.LT.JSAVE.OR.J.GT.JSAVE) GO TO 67
      MM=JSAVE-1
      DO 65 M=1,MM
      ETP(M)=ETP(JSAVE)
      HTP(M)=HTP(JSAVE)
      THETA(M)=THETA(M)/CONV
      WRITE(6,290) THETA(M),ET(M),ETP(M),HT(M),HTP(M)
      IF(IPUNCH.GT.0) GO TO 65
       PUNCH 130, THETA(M),ET(M),ETP(M),HT(M),HTP(M)
   65 THETA(M)=THETA(M)*CONV
   67  WRITE(6,280)THETA(J),ET(J),ETP(J),HT(J),HTP(J),N,NN,
     *BETA(N),BETA(NN),BETAJ
  280 FORMAT(2X,F10.5,1X,F10.5,2X,F10.5,1X,F10.5,2X,F10.5,2X,I4,
     *2X,I4,3X,F10.5,3X,F10.5,3X,F10.5)
       IF (IPUNCH.GT.0) GO TO 55
       PUNCH 130, THETA(J),ET(J),ETP(J),HT(J),HTP(J)
   55 BETA(N)=BETA(N)*CONV
      BETA(NN)=BETA(NN)*CONV
       THETA(J)=THETA(J)*CONV
       J=J+1
   35  CONTINUE
      K=J
      DO 45 L=K,JMAX
       THETA(L)=THETA(L)/CONV
```

```
      WRITE(6,290) THETA(L),ET(L),ETP(L),HT(L),HTP(L)
  290 FORMAT(2X,F10.5,1X,F10.5,2X,F10.5,1X,F10.5,2X,F10.5)
      IF(IPUNCH.GT.0) GO TO 45
      PUNCH 130, THETA(L),ET(L),ETP(L),HT(L),HTP(L)
   45 CONTINUE
   75  END
```

ORIGINAL PAGE IS
OF POOR QUALITY

APPENDIX C

"SAMPLE RUN" OF SHAPING AND PHASE ALTERATION

Following is a sample computer run of the shaping program and the phase altering program. The X-Band pattern of a 14 degree horn is used to calculate a shape for optimum illumination efficiency on a 98.1 meter dish, using a 10 meter subreflector. An 8.6 meter section at the center of the main reflector is left in a complete optical shadow to increase final subreflector blockage efficiency.

The subreflector edge taper (edge illumination) from the 14° horn is at 13.12° or about - 18.4 dB. The final focus location is at A = 283.5 inches, measured from the aperture toward the vertex. Note the final shape has an RMS variation from a paraboloid of 0.61 inches.

751 values of X, Y, R, and θ are tabulated followed by three groups of 100 values each that define the subreflector surface, suitable for application in a JPL scattering program. These values are:

(1) $-1/R$, inverse of the distance from the focus to the subreflector surface.

(2) $d(-1/R)/d\theta$, where θ is the particular angular coordinate corresponding to R.

(3) θ, the angle between the reflector axis and R, in radians. $\theta = \pi$ when R is along the axis to the subreflector vertex.

The phase altering program re-tabulates the main reflector coordinate values and the input pattern (obtained from a scattering computer program, the horn pattern from the shaped subreflector). This is then followed by the computed slightly altered amplitude pattern and a near uniform phase pattern suitable for efficiency calculation.

```
#XQT 94350*FIL.SHAPER

                    SYMMETRICAL SHAPING PROGRAM

***INPUT XNMAX,YNMAX, 2F10.5, DR #

  1931.00000   731.50000

***INPUT MAIN HEADER

3862 IN. DISH,F/D=.325, 170 IN. HOLE

***INPUT FIELD DATA HEADER

A 14 DH AT 13.12 DEG(18.4 DB), X SHA
***INPUT JIN, I5

  181

***ADD VOLTAGE ILLUM PATTERN DECK


***INPUT NSKIP, I5

   1    3

***INPUT A 1 FOR RUSCH OUTPUT, I5
***INPUT A 2 FOR PSCATT OUTPUT, I5
***INPUT A 3 FOR BOTH OUTPUTS, I5
```

ORIGINAL PAGE IS
OF POOR QUALITY

ORIGINAL PAGE IS
OF POOR QUALITY

```
3

***INPUT XMAX,THETAMAX,SUB DIAM,XMIN,C,  5F10.5

  1931.00000    13.12000   393.80000   170.00000 -1000.00000     8.41500

***INPUT A,DAMAX,DAMIN, 3F10.5

   283.00000     1.00000      .10000


XMAX= 1931.0000 THEMAX=   13.1200 K=  196.9000 P= 3.0 C=-1000.0000
A NOMINAL=  283.0000 DELTA A MAX=    1.0000 DELTA A MIN=      .1000
THEMAX(RAD)=  .228987195 R0(INCH)=    867.4342Y0(INCH)=       .0000


TRUE C2 =      .4321854-08


          C2=   .4[illegible]185432-08
      A     RMS ERROR  B SHIFT  MAX NORM  MIN NORM   MAX CO-ORDS      MIN CO-ORDS
  283.0000      .6119   -2.9501    2.3864    -.6720 1931.00      .00 1282.95  404.89
  284.0000      .6120   -2.6823    2.1694    -.7171 1931.00      .00 1318.17  387.14
  282.0000      .6292   -3.2177    2.6033    -.6358 1931.00      .00 1243.04  424.45
FIRST PASS, ABEST=   283.00000000 RMS=      .61189546 B=    -2.95007470
NORMAL MAX.=     2.38637251 NORMAL MIN.=     -.67197466 PEAK-TO-  PEAK MAX.=     3.05834717
MAX AT X= 1931.0000 Y=      .0000 MIN AT X= 1282.9543 Y=  404.8946
      A     RMS ERROR  B SHIFT  MAX NORM  MIN NORM   MAX CO-ORDS      MIN CO-ORDS
  283.0000      .6119   -2.9501    2.3864    -.6720 1931.00      .00 1282.95  404.89
  283.1000      .6111   -2.9233    2.3647    -.6761 1931.00      .00 1285.30  403.73
  283.2000      .6105   -2.8966    2.3430    -.6803 1931.00      .00 1290.00  401.38
  283.3000      .6101   -2.8698    2.3213    -.6846 1931.00      .00 1292.35  400.21
  283.4000      .6100   -2.8427    2.2993    -.6893 1931.00      .00 1297.04  397.85
  283.5000      .6097   -2.8163    2.2779    -.6934 1931.00      .00 1299.39  396.68
  283.6000      .6098   -2.7895    2.2562    -.6980 1931.00      .00 1304.09  394.30
FINAL  PASS, ABEST=   283.49999619 RMS=      .60972073 B=    -2.81626156
NORMAL MAX.=     2.27790648 NORMAL MIN.=     -.69340922 PEAK-TO-  PEAK MAX.=     2.97131568
MAX AT X= 1931.0000 Y=      .0000 MIN AT X= 1299.3902 Y=  396.6759


X(INCH) Y(INCH) THETA(DEG) RADIUS(INCH) C1(INCH) BETA(DEG) YAAS(INCH)  EX(INCH)
1931.0000     .0000   13.1200  867.4342 2690.1111   72.0643   -2.8163    2.2779          -.72740    .00000   1.25776
1928.6522    1.7089   12.8240  863.3327 2690.1110   72.1310   -1.0385    2.2213          -.72829   -.72788   1.25892
1926.3042    3.4196   12.5891  860.1033 2690.1111   72.1682     .7372    2.1682          -.72879   -.72857   1.25957
```

1923.9561	5.1312	12.3887	857.3664	2690.1111	72.1888	2.5107	2.1177	-.72906	-.72894	1.25993
1921.6082	6.8432	12.2103	854.9455	2690.1111	72.1987	4.2821	2.0696	-.72920	-.72914	1.26011
1919.2601	8.5555	12.0475	852.7495	2690.1112	72.2011	6.0513	2.0235	-.72923	-.72922	1.26015
1916.9121	10.2676	11.8991	850.7570	2690.1112	72.1967	7.8183	1.9792	-.72917	-.72921	1.26007
1914.5642	11.9795	11.7675	848.9976	2690.1112	72.1843	9.5832	1.9366	-.72900	-.72909	1.25985
1912.2161	13.6910	11.6480	847.4078	2690.1112	72.1662	11.3459	1.8954	-.72876	-.72889	1.25954
1909.8682	15.4017	11.5376	845.9462	2690.1113	72.1437	13.1064	1.8554	-.72846	-.72862	1.25915
1907.5201	17.1118	11.4345	844.5855	2690.1112	72.1178	14.8649	1.8166	-.72811	-.72829	1.25869
1905.1722	18.8209	11.3372	843.3073	2690.1113	72.0891	16.6210	1.7789	-.72773	-.72793	1.25819
1902.8241	20.5292	11.2449	842.0979	2690.1113	72.0581	18.3752	1.7421	-.72732	-.72753	1.25765
1900.4762	22.2364	11.1567	840.9472	2690.1113	72.0251	20.1270	1.7064	-.72688	-.72710	1.25707
1898.1283	23.9425	11.0722	839.8474	2690.1113	71.9903	21.8767	1.6715	-.72641	-.72665	1.25647
1895.7803	25.6475	10.9907	838.7923	2690.1112	71.9541	23.6242	1.6374	-.72593	-.72616	1.25584
1893.4323	27.3514	10.9135	837.7950	2690.1113	71.9158	25.3696	1.6043	-.72542	-.72568	1.25517
1891.0843	29.0541	10.8407	836.8571	2690.1113	71.8755	27.1129	1.5718	-.72488	-.72516	1.25446
1888.7363	30.7555	10.7715	835.9690	2690.1114	71.8335	28.8540	1.5401	-.72432	-.72461	1.25373
1886.3882	32.4555	10.7055	835.1237	2690.1113	71.7900	30.5929	1.5090	-.72375	-.72404	1.25297
1884.0402	34.1542	10.6422	834.3155	2690.1114	71.7451	32.3297	1.4785	-.72315	-.72345	1.25219
1881.6923	35.8514	10.5812	833.5400	2690.1114	71.6992	34.0642	1.4487	-.72254	-.72285	1.25139
1879.3443	37.5472	10.5224	832.7934	2690.1114	71.6522	35.7967	1.4194	-.72192	-.72223	1.25057
1876.9962	39.2416	10.4655	832.0728	2690.1114	71.6043	37.5269	1.3907	-.72128	-.72160	1.24973
1874.6482	40.9344	10.4103	831.3757	2690.1114	71.5556	39.2551	1.3625	-.72063	-.72096	1.24888
1872.3003	42.6256	10.3566	830.7000	2690.1114	71.5061	40.9809	1.3348	-.71998	-.72031	1.24802
1869.9523	44.3154	10.3043	830.0439	2690.1114	71.4559	42.7047	1.3076	-.71931	-.71965	1.24714
1867.6042	46.0035	10.2534	829.4057	2690.1114	71.4051	44.4264	1.2808	-.71864	-.71898	1.24625
1865.2564	47.6900	10.2036	828.7841	2690.1115	71.3537	46.1457	1.2545	-.71796	-.71830	1.24536
1862.9083	49.3750	10.1550	828.1779	2690.1115	71.3017	47.8631	1.2286	-.71727	-.71762	1.24445
1860.5603	51.0584	10.1074	827.5860	2690.1115	71.2492	49.5782	1.2032	-.71658	-.71693	1.24353
1858.2124	52.7400	10.0607	827.0076	2690.1115	71.1962	51.2911	1.1782	-.71588	-.71623	1.24261
1855.8642	54.4202	10.0149	826.4416	2690.1114	71.1428	53.0020	1.1536	-.71517	-.71553	1.24168
1853.5163	56.0986	9.9701	825.8888	2690.1115	71.0889	54.7106	1.1294	-.71446	-.71484	1.24073
1851.1684	57.7753	9.9265	825.3521	2690.1116	71.0344	56.4170	1.1056	-.71375	-.71411	1.23978
1848.8204	59.4503	9.8841	824.8305	2690.1116	70.9793	58.1213	1.0821	-.71302	-.71339	1.23882
1846.4724	61.1236	9.8426	824.3229	2690.1116	70.9237	59.8235	1.0590	-.71229	-.71266	1.23785
1844.1244	62.7952	9.8022	823.8281	2690.1116	70.8676	61.5235	1.0363	-.71155	-.71192	1.23687
1841.7764	64.4651	9.7626	823.3454	2690.1117	70.8111	63.2213	1.0138	-.71081	-.71118	1.23589
1839.4284	66.1332	9.7238	822.8739	2690.1117	70.7541	64.9169	.9917	-.71006	-.71044	1.23489
1837.0803	67.7995	9.6858	822.4129	2690.1116	70.6967	66.6104	.9699	-.70931	-.70968	1.23389
1834.7325	69.4640	9.6486	821.9618	2690.1117	70.6390	68.3017	.9484	-.70855	-.70893	1.23288
1832.3844	71.1268	9.6120	821.5199	2690.1116	70.5809	69.9909	.9272	-.70779	-.70817	1.23187
1830.0364	72.7878	9.5761	821.0868	2690.1117	70.5224	71.6779	.9063	-.70702	-.70741	1.23085
1827.6884	74.4470	9.5408	820.6620	2690.1117	70.4637	73.3627	.8857	-.70625	-.70664	1.22982
1825.3404	76.1044	9.5061	820.2451	2690.1117	70.4046	75.0454	.8654	-.70548	-.70587	1.22879
1822.9924	77.7600	9.4719	819.8356	2690.1117	70.3452	76.7259	.8453	-.70471	-.70510	1.22775
1820.6444	79.4137	9.4383	819.4332	2690.1117	70.2855	78.4043	.8255	-.70393	-.70432	1.22671
1818.2966	81.0655	9.4051	819.0376	2690.1117	70.2255	80.0804	.8059	-.70314	-.70354	1.22567
1815.9485	82.7156	9.3724	818.6484	2690.1118	70.1653	81.7544	.7866	-.70236	-.70275	1.22462
1813.6005	84.3639	9.3402	818.2654	2690.1118	70.1048	83.4263	.7676	-.70157	-.70197	1.22356
1811.2524	86.0103	9.3083	817.8884	2690.1118	70.0441	85.0960	.7487	-.70078	-.70118	1.22250
1808.9044	87.6548	9.2769	817.5169	2690.1118	69.9831	86.7636	.7301	-.69999	-.70039	1.22144
1806.5564	89.2974	9.2459	817.1510	2690.1118	69.9219	88.4289	.7118	-.69919	-.69959	1.22037
1804.2084	90.9382	9.2153	816.7902	2690.1118	69.8605	90.0922	.6936	-.69840	-.69880	1.21930
1801.8606	92.5770	9.1851	816.4345	2690.1118	69.7989	91.7531	.6757	-.69760	-.69800	1.21822
1799.5125	94.2141	9.1551	816.0837	2690.1118	69.7370	93.4120	.6581	-.69679	-.69719	1.21714
1797.1645	95.8492	9.1256	815.7374	2690.1118	69.6750	95.0688	.6406	-.69599	-.69639	1.21606
1794.8165	97.4825	9.0963	815.3958	2690.1118	69.6127	96.7233	.6233	-.69518	-.69559	1.21497
1792.4686	99.1137	9.0674	815.0584	2690.1118	69.5503	98.3756	.6063	-.69437	-.69478	1.21388

ORIGINAL PAGE IS
OF POOR QUALITY

1790.1205	100.7432	9.0388	814.7253	2690.1118	69.4877	100.0259	.5894	-.69357	-.69397	1.21279
1787.7725	102.3708	9.0104	814.3962	2690.1118	69.4248	101.6740	.5728	-.69275	-.69316	1.21169
1785.4245	103.9964	8.9824	814.0712	2690.1119	69.3618	103.3199	.5563	-.69194	-.69236	1.21059
1783.0766	105.6201	8.9546	813.7505	2690.1119	69.2986	104.9636	.5401	-.69112	-.69154	1.20949
1780.7286	107.2419	8.9272	813.4342	2690.1120	69.2352	106.6052	.5240	-.69031	-.69072	1.20838
1778.3806	108.8618	8.9001	813.1219	2690.1120	69.1716	108.2446	.5082	-.68949	-.68990	1.20727
1776.0326	110.4797	8.8733	812.8136	2690.1120	69.1078	109.8818	.4925	-.68867	-.68908	1.20616
1773.6846	112.0958	8.8468	812.5091	2690.1120	69.0439	111.5169	.4769	-.68784	-.68826	1.20504
1771.3366	113.7099	8.8205	812.2083	2690.1120	68.9797	113.1498	.4616	-.68702	-.68743	1.20392
1768.9886	115.3220	8.7945	811.9111	2690.1120	68.9154	114.7806	.4464	-.68620	-.68661	1.20280
1766.6406	116.9322	8.7687	811.6174	2690.1120	68.8510	116.4092	.4315	-.68537	-.68578	1.20168
1764.2926	118.5405	8.7432	811.3271	2690.1120	68.7863	118.0356	.4166	-.68454	-.68496	1.20055
1761.9446	120.1469	8.7180	811.0401	2690.1121	68.7215	119.6599	.4020	-.68371	-.68413	1.19942
1759.5966	121.7512	8.6929	810.7562	2690.1120	68.6565	121.2820	.3875	-.68288	-.68330	1.19828
1757.2486	123.3536	8.6681	810.4754	2690.1121	68.5914	122.9020	.3732	-.68204	-.68246	1.19715
1754.9006	124.9541	8.6435	810.1977	2690.1121	68.5261	124.5198	.3590	-.68121	-.68163	1.19601
1752.5526	126.5526	8.6191	809.9229	2690.1120	68.4607	126.1354	.3450	-.68037	-.68079	1.19486
1750.2046	128.1492	8.5949	809.6509	2690.1120	68.3951	127.7488	.3311	-.67954	-.67996	1.19372
1747.8566	129.7437	8.5710	809.3817	2690.1120	68.3294	129.3601	.3174	-.67870	-.67912	1.19257
1745.5087	131.3363	8.5472	809.1152	2690.1121	68.2636	130.9692	.3038	-.67786	-.67828	1.19142
1743.1608	132.9268	8.5236	808.8514	2690.1121	68.1975	132.5761	.2904	-.67702	-.67744	1.19027
1740.8128	134.5155	8.5002	808.5901	2690.1121	68.1314	134.1809	.2772	-.67618	-.67660	1.18912
1738.4648	136.1022	8.4770	808.3313	2690.1121	68.0651	135.7836	.2641	-.67534	-.67575	1.18796
1736.1167	137.6869	8.4539	808.0750	2690.1121	67.9987	137.3841	.2511	-.67449	-.67492	1.18680
1733.7688	139.2696	8.4310	807.8211	2690.1121	67.9321	138.9824	.2382	-.67365	-.67407	1.18564
1731.4207	140.8504	8.4083	807.5695	2690.1121	67.8655	140.5786	.2255	-.67280	-.67323	1.18448
1729.0728	142.4291	8.3858	807.3202	2690.1121	67.7987	142.1725	.2130	-.67196	-.67238	1.18331
1726.7247	144.0059	8.3634	807.0731	2690.1122	67.7317	143.7644	.2005	-.67111	-.67153	1.18214
1724.3767	145.5807	8.3411	806.8282	2690.1121	67.6646	145.3541	.1882	-.67026	-.67068	1.18097
1722.0287	147.1534	8.3191	806.5855	2690.1121	67.5975	146.9415	.1761	-.66941	-.66984	1.17980
1719.6807	148.7242	8.2971	806.3449	2690.1122	67.5301	148.5269	.1641	-.66856	-.66899	1.17862
1717.3327	150.2930	8.2753	806.1063	2690.1122	67.4627	150.1101	.1521	-.66771	-.66813	1.17745
1714.9849	151.8597	8.2537	805.8697	2690.1122	67.3951	151.6910	.1404	-.66686	-.66728	1.17627
1712.6369	153.4245	8.2322	805.6351	2690.1122	67.3275	153.2698	.1287	-.66600	-.66643	1.17509
1710.2888	154.9873	8.2108	805.4024	2690.1122	67.2597	154.8465	.1172	-.66515	-.66558	1.17390
1707.9408	156.5480	8.1896	805.1716	2690.1122	67.1917	156.4211	.1058	-.66429	-.66472	1.17272
1705.5928	158.1068	8.1685	804.9426	2690.1122	67.1237	157.9935	.0945	-.66344	-.66387	1.17153
1703.2448	159.6636	8.1475	804.7155	2690.1122	67.0556	159.5636	.0833	-.66258	-.66302	1.17034
1700.8968	161.2183	8.1266	804.4902	2690.1122	66.9873	161.1317	.0722	-.66173	-.66215	1.16915
1698.5488	162.7710	8.1059	804.2666	2690.1122	66.9189	162.6975	.0613	-.66087	-.66130	1.16796
1696.2008	164.3218	8.0853	804.0447	2690.1122	66.8505	164.2613	.0505	-.66001	-.66044	1.16676
1693.8529	165.8704	8.0648	803.8245	2690.1122	66.7819	165.8227	.0398	-.65915	-.65958	1.16556
1691.5048	167.4171	8.0444	803.6060	2690.1122	66.7132	167.3822	.0292	-.65829	-.65872	1.16436
1689.1568	168.9618	8.0242	803.3891	2690.1122	66.6443	168.9394	.0187	-.65743	-.65786	1.16316
1686.8089	170.5044	8.0040	803.1739	2690.1123	66.5754	170.4944	.0083	-.65657	-.65700	1.16196
1684.4609	172.0450	7.9840	802.9601	2690.1123	66.5064	172.0473	-.0019	-.65571	-.65615	1.16076
1682.1129	173.5836	7.9641	802.7479	2690.1123	66.4373	173.5980	-.0120	-.65485	-.65529	1.15955
1679.7649	175.1202	7.9442	802.5372	2690.1124	66.3680	175.1466	-.0221	-.65398	-.65442	1.15834
1677.4170	176.6547	7.9245	802.3279	2690.1124	66.2987	176.6929	-.0320	-.65312	-.65355	1.15713
1675.0690	178.1872	7.9049	802.1201	2690.1124	66.2292	178.2372	-.0418	-.65226	-.65269	1.15592
1672.7210	179.7177	7.8853	801.9137	2690.1124	66.1597	179.7792	.0516	-.65139	-.65182	1.15470
1670.3730	181.2461	7.8659	801.7086	2690.1124	66.0900	181.3191	-.0612	-.65053	-.65096	1.15349
1668.0250	182.7725	7.8465	801.5050	2690.1124	66.0203	182.8569	-.0707	-.64966	-.65010	1.15227
1665.6770	184.2969	7.8273	801.3026	2690.1124	65.9505	184.3925	-.0801	.64879	-.64923	1.15105
1663.3290	185.8193	7.8081	801.1017	2690.1125	65.8805	185.9259	-.0895	-.64793	-.64836	1.14983
1660.9810	187.3396	7.7890	800.9020	2690.1124	65.8105	187.4571	-.0987	-.64706	-.64749	1.14861
1658.6530	188.8579	7.7700	800.7036	2690.1125	65.7403	188.9862	-.1078	-.64619	-.64663	1.14739

1656.2851	190.3741	7.7511	800.5065	2690.1125	65.6701	190.5132	-.1169	-.64532	-.64576	1.14616
1653.9370	191.8883	7.7323	800.3106	2690.1124	65.5998	192.0379	-.1258	-.64445	-.64489	1.14493
1651.5891	193.4005	7.7136	800.1160	2690.1125	65.5293	193.5606	-.1346	-.64358	-.64402	1.14370
1649.2410	194.9106	7.6949	799.9226	2690.1125	65.4588	195.0810	-.1434	-.64271	-.64315	1.14247
1646.8931	196.4186	7.6764	799.7304	2690.1125	65.3882	196.5993	-.1520	-.64184	-.64226	1.14124
1644.5451	197.9247	7.6579	799.5394	2690.1125	65.3175	198.1154	-.1606	-.64097	-.64141	1.14000
1642.1971	199.4287	7.6395	799.3495	2690.1125	65.2467	199.6294	-.1690	-.64010	-.64054	1.13877
1639.8490	200.9306	7.6211	799.1609	2690.1125	65.1757	201.1412	-.1774	-.63923	-.63966	1.13753
1637.5010	202.4305	7.6029	798.9733	2690.1125	65.1047	202.6508	-.1857	-.63836	-.63879	1.13629
1635.1531	203.9283	7.5847	798.7869	2690.1125	65.0337	204.1582	-.1939	-.63748	-.63792	1.13505
1632.8051	205.4241	7.5666	798.6016	2690.1125	64.9625	205.6636	-.2020	-.63661	-.63705	1.13381
1630.4571	206.9178	7.5486	798.4174	2690.1125	64.8912	207.1667	-.2100	-.63574	-.63618	1.13256
1628.1091	208.4095	7.5306	798.2343	2690.1126	64.8198	208.6677	-.2179	-.63486	-.63530	1.13132
1625.7611	209.8992	7.5127	798.0522	2690.1125	64.7484	210.1665	-.2258	-.63399	-.63443	1.13007
1623.4131	211.3867	7.4949	797.8713	2690.1125	64.6768	211.6631	-.2335	-.63311	-.63355	1.12882
1621.0651	212.8722	7.4771	797.6913	2690.1125	64.6052	213.1576	-.2412	-.63224	-.63267	1.12757
1618.7171	214.3557	7.4595	797.5124	2690.1125	64.5334	214.6499	-.2488	-.63136	-.63180	1.12632
1616.3691	215.8371	7.4419	797.3345	2690.1125	64.4616	216.1401	-.2563	-.63048	-.63092	1.12507
1614.0211	217.3165	7.4243	797.1577	2690.1126	64.3897	217.6281	-.2637	-.62961	-.63005	1.12381
1611.6731	218.7938	7.4068	796.9818	2690.1126	64.3177	219.1139	-.2711	-.62873	-.62917	1.12256
1609.3251	220.2690	7.3894	796.8069	2690.1126	64.2456	220.5976	-.2783	-.62785	-.62830	1.12130
1606.9771	221.7422	7.3721	796.6330	2690.1126	64.1734	222.0791	-.2855	-.62698	-.62741	1.12004
1604.6293	223.2132	7.3548	796.4600	2690.1126	64.1012	223.5583	-.2926	-.62610	-.62654	1.11878
1602.2812	224.6822	7.3376	796.2880	2690.1126	64.0288	225.0355	-.2996	-.62522	-.62566	1.11751
1599.9332	226.1492	7.3204	796.1169	2690.1126	63.9564	226.5106	-.3065	-.62434	-.62478	1.11625
1597.5852	227.6142	7.3033	795.9468	2690.1126	63.8838	227.9834	-.3134	-.62346	-.62390	1.11498
1595.2372	229.0770	7.2863	795.7776	2690.1126	63.8112	229.4541	-.3201	-.62258	-.62302	1.11372
1592.8892	230.5378	7.2693	795.6093	2690.1126	63.7385	230.9227	-.3269	-.62170	-.62214	1.11245
1590.5412	231.9965	7.2524	795.4419	2690.1126	63.6657	232.3890	-.3335	-.62082	-.62126	1.11118
1588.1932	233.4532	7.2356	795.2754	2690.1126	63.5928	233.8533	-.3400	-.61994	-.62038	1.10990
1585.8452	234.9078	7.2188	795.1098	2690.1127	63.5199	235.3153	-.3465	-.61906	-.61950	1.10863
1583.4972	236.3603	7.2020	794.9450	2690.1127	63.4468	236.7752	-.3529	-.61818	-.61862	1.10736
1581.1492	237.8108	7.1853	794.7811	2690.1127	63.3737	238.2329	-.3592	-.61730	-.61774	1.10608
1578.8012	239.2591	7.1687	794.6181	2690.1127	63.3005	239.6884	-.3655	-.61641	-.61685	1.10480
1576.4532	240.7054	7.1521	794.4559	2690.1127	63.2272	241.1418	-.3717	-.61553	-.61597	1.10352
1574.1052	242.1496	7.1356	794.2945	2690.1127	63.1538	242.5931	-.3778	-.61465	-.61509	1.10224
1571.7572	243.5918	7.1192	794.1340	2690.1127	63.0803	244.0421	-.3838	-.61377	-.61420	1.10096
1569.4094	245.0318	7.1028	793.9743	2690.1127	63.0068	245.4889	-.3898	-.61288	-.61332	1.09968
1567.0613	246.4698	7.0864	793.8154	2690.1127	62.9331	246.9337	-.3956	-.61200	-.61244	1.09839
1564.7133	247.9058	7.0701	793.6574	2690.1127	62.8594	248.3763	-.4015	-.61111	-.61156	1.09710
1562.3653	249.3397	7.0538	793.5001	2690.1127	62.7856	249.8167	-.4072	-.61023	-.61067	1.09582
1560.0173	250.7715	7.0376	793.3436	2690.1127	62.7117	251.2549	-.4129	-.60935	-.60979	1.09453
1557.6693	252.2012	7.0215	793.1879	2690.1127	62.6377	252.6911	-.4185	-.60846	-.60890	1.09323
1555.3213	253.6288	7.0054	793.0329	2690.1128	62.5636	254.1249	-.4240	-.60758	-.60804	1.09194
1552.9733	255.0543	6.9893	792.8787	2690.1128	62.4895	255.5567	-.4295	-.60669	-.60712	1.09065
1550.6254	256.4778	6.9733	792.7252	2690.1128	62.4153	256.9863	-.4349	-.60580	-.60625	1.08935
1548.2775	257.8991	6.9573	792.5724	2690.1128	62.3410	258.4137	-.4403	-.60492	-.60536	1.08806
1545.9293	259.3185	6.9414	792.4203	2690.1128	62.2666	259.8390	-.4455	-.60403	-.60448	1.08676
1543.5813	260.7357	6.9255	792.2688	2690.1128	62.1922	261.2621	-.4507	-.60315	-.60359	1.08546
1541.2334	262.1509	6.9097	792.1179	2690.1128	62.1176	262.6830	-.4559	-.60226	-.60270	1.08416
1538.8854	263.5639	6.8939	791.9678	2690.1128	62.0430	264.1018	-.4610	-.60137	-.60181	1.08285
1536.5374	264.9749	6.8781	791.8182	2690.1128	61.9683	265.5184	-.4660	-.60048	-.60093	1.08155
1534.1894	266.3838	6.8624	791.6694	2690.1128	61.8935	266.9329	-.4709	-.59960	-.60004	1.08025
1531.8414	267.7906	6.8467	791.5211	2690.1128	61.8187	268.3452	-.4758	-.59871	-.59915	1.07894
1529.4934	269.1953	6.8310	791.3735	2690.1128	61.7438	269.7553	-.4806	-.59782	-.59827	1.07763
1527.1454	270.5979	6.8154	791.2265	2690.1129	61.6688	271.1632	-.4854	-.59693	-.59738	1.07632
1524.7974	271.9985	6.7998	791.0802	2690.1129	61.5937	272.5690	-.4901	-.59605	-.59649	1.07501

1656.2851	190.3741	7.7511	800.5065	2690.1125	65.6701	190.5132	-.1169	-.64532	-.64576	1.14616
1653.9370	191.8883	7.7323	800.3106	2690.1124	65.5998	192.0379	-.1258	-.64445	-.64489	1.14493
1651.5891	193.4005	7.7136	800.1160	2690.1125	65.5293	193.5606	-.1346	-.64358	-.64402	1.14370
1649.2410	194.9106	7.6949	799.9226	2690.1125	65.4588	195.0810	-.1434	-.64271	-.64315	1.14247
1646.8931	196.4186	7.6764	799.7304	2690.1125	65.3882	196.5993	-.1520	-.64184	-.64228	1.14124
1644.5451	197.9247	7.6579	799.53[illegible]4	2690.1125	65.3175	198.1154	-.1606	-.64097	-.64141	1.14000
1642.1971	199.4287	7.6395	799.3495	2690.1125	65.2467	199.6294	-.1690	-.64010	-.64054	1.13877
1639.8490	200.9306	7.6211	799.1609	2690.1125	65.1757	201.1412	-.1774	-.63923	-.63966	1.13753
1637.5010	202.4305	7.6029	798.9733	2690.1125	65.1047	202.6508	-.1857	-.63836	-.63879	1.13629
1635.1531	203.9283	7.5847	798.7869	2690.1125	65.0337	204.1582	-.1939	-.63748	-.63792	1.13505
1632.8051	205.4241	7.5666	798.6016	2690.1125	64.9625	205.6636	-.2020	-.63661	-.63705	1.13381
1630.4571	206.9178	7.5486	798.4174	2690.1125	64.8912	207.1667	-.2100	-.63574	-.63618	1.13256
1628.1091	208.4095	7.5306	798.2343	2690.1126	64.8198	208.6677	-.2179	-.63486	-.63530	1.13132
1625.7611	209.8992	7.5127	798.0522	2690.1125	64.7484	210.1665	-.2258	-.63399	-.63443	1.13007
1623.4131	211.3867	7.4949	797.8713	2690.1125	64.6768	211.6631	-.2335	-.63311	-.63355	1.12882
1621.0651	212.8722	7.4771	797.6913	2690.1125	64.6052	213.1576	-.2412	-.63224	-.63267	1.12757
1618.7171	214.3557	7.4595	797.5124	2690.1125	64.5334	214.6499	-.2488	-.63136	-.63180	1.12632
1616.3691	215.8371	7.4419	797.3345	2690.1125	64.4616	216.1401	-.2563	-.63048	-.63092	1.12507
1614.0211	217.3165	7.4243	797.1577	2690.1126	64.3897	217.6281	-.2637	-.62961	-.63005	1.12381
1611.6731	218.7938	7.4068	796.9818	2690.1126	64.3177	219.1139	-.2711	-.62873	-.62917	1.12256
1609.3251	220.2690	7.3894	796.8069	2690.1126	64.2456	220.5976	-.2783	-.62785	-.62830	1.12130
1606.9771	221.7422	7.3721	796.6330	2690.1126	64.1734	222.0791	-.2855	-.62698	-.62741	1.12004
1604.6293	223.2132	7.3548	796.4600	2690.1126	64.1012	223.5583	-.2926	-.62610	-.62654	1.11878
1602.2812	224.6822	7.3376	796.2880	2690.1126	64.0288	225.0355	-.2996	-.62522	-.62566	1.11751
1599.9332	226.1492	7.3204	796.1169	2690.1126	63.9564	226.5106	-.3065	-.62434	-.62478	1.11625
1597.5852	227.6142	7.3033	795.9468	2690.1126	63.8838	227.9834	-.3134	-.62346	-.62390	1.11498
1595.2372	229.0770	7.2863	795.7776	2690.1126	63.8112	229.4541	-.3201	-.62258	-.62302	1.11372
1592.8892	230.5378	7.2693	795.6093	2690.1126	63.7385	230.9227	-.3269	-.62170	-.62214	1.11245
1590.5412	231.9965	7.2524	795.4419	2690.1126	63.6657	232.3890	-.3335	-.62082	-.62126	1.11118
1588.1932	233.4532	7.2356	795.2754	2690.1126	63.5928	233.8533	-.3400	-.61994	-.62038	1.10990
1585.8452	234.9078	7.2188	795.1098	2690.1127	63.5199	235.3153	-.3465	-.61906	-.61950	1.10863
1583.4972	236.3603	7.2020	794.9450	2690.1127	63.4468	236.7752	-.3529	-.61818	-.61862	1.10736
1581.1492	237.8108	7.1853	794.7811	2690.1127	63.3737	238.2329	-.3592	-.61730	-.61774	1.10608
1578.8012	239.2591	7.1687	794.6181	2690.1127	63.3005	239.6884	-.3655	-.61641	-.61685	1.10480
1576.4532	240.7054	7.1521	794.4559	2690.1127	63.2272	241.1418	-.3717	-.61553	-.61597	1.10352
1574.1052	242.1496	7.1356	794.2945	2690.1127	63.1538	242.5931	-.3778	-.61465	-.61509	1.10224
1571.7572	243.5918	7.1192	794.1340	2690.1127	63.0803	244.0421	-.3838	-.61377	-.61420	1.10096
1569.4094	245.0318	7.1028	793.9743	2690.1127	63.0068	245.4889	-.3898	-.61288	-.61332	1.09968
1567.0613	246.4698	7.0864	793.8154	2690.1127	62.9331	246.9337	-.3956	-.61200	-.61244	1.09839
1564.7133	247.9058	7.0701	793.6574	2690.1127	62.8594	248.3763	-.4015	-.61111	-.61156	1.09710
1562.3653	249.3397	7.0538	793.5001	2690.1127	62.7856	249.8167	-.4072	-.61023	-.61067	1.09582
1560.0173	250.7715	7.0376	793.3436	2690.1127	62.7117	251.2549	-.4129	-.60935	-.60979	1.09453
1557.6693	252.2012	7.0215	793.1879	2690.1127	62.6377	252.6911	-.4185	-.60846	-.60890	1.09323
1555.3213	253.6288	7.0054	793.0329	2690.1128	62.5636	254.1249	-.4240	-.60758	-.60804	1.09194
1552.9733	255.0543	6.9893	792.8787	2690.1128	62.4895	255.5567	-.4295	-.60669	-.60712	1.09065
1550.6254	256.4778	6.9733	792.7252	2690.1128	62.4153	256.9863	-.4349	-.60580	-.60625	1.08935
1548.2775	257.8991	6.9573	792.5724	2690.1128	62.3410	258.4137	-.4403	-.60492	-.60536	1.08806
1545.9293	259.3185	6.9414	792.4203	2690.1128	62.2666	259.8390	-.4455	-.60403	-.60448	1.08676
1543.5813	260.7357	6.9255	792.2688	2690.1128	62.1922	261.2621	-.4507	-.60315	-.60359	1.08546
1541.2334	262.1509	6.9097	792.1179	2690.1128	62.1176	262.6830	-.4559	-.60226	-.60270	1.08416
1538.8854	263.5639	6.8939	791.9678	2690.1128	62.0430	264.1018	-.4610	-.60137	-.60181	1.08285
1536.5374	264.9749	6.8781	791.8182	2690.1128	61.9683	265.5184	-.4660	-.60048	-.60093	1.08155
1534.1894	266.3838	6.8624	791.6694	2690.1128	61.8935	266.9329	-.4709	-.59960	-.60004	1.08025
1531.8414	267.7906	6.8467	791.5211	2690.1128	61.8187	268.3452	-.4758	-.59871	-.59915	1.07894
1529.4934	269.1953	6.8310	791.3735	2690.1128	61.7438	269.7553	-.4806	-.59782	-.59827	1.07763
1527.1454	270.5979	6.8154	791.2265	2690.1129	61.6688	271.1632	-.4854	-.59693	-.59738	1.07632
1524.7974	271.9985	6.7998	791.0802	2690.1128	61.5937	272.5690	-.4901	-.59605	-.59649	1.07501

C-2

1522.4494	273.3970	6.7842	790.9345	2690.1128	61.5185	273.9727	-.4947	-.59516	-.59560	1.07370
1520.1014	274.7933	6.7687	790.7893	2690.1129	61.4433	275.3741	-.4993	-.59427	-.59471	1.07239
1517.7534	276.1876	6.7533	790.6449	2690.1129	61.3680	276.7735	-.5038	-.59338	-.59382	1.07107
1515.4054	277.5798	6.7378	790.5010	2690.1129	61.2926	278.1706	-.5082	-.59249	-.59294	1.06976
1513.0574	278.9700	6.7224	790.3577	2690.1129	61.2172	279.5656	-.5126	-.59160	-.59204	1.06844
1510.7095	280.3580	6.7071	790.2150	2690.1129	61.1416	280.9584	-.5169	-.59071	-.59116	1.06712
1508.3615	281.7439	6.6917	790.0729	2690.1129	61.0660	282.3491	-.5212	-.58982	-.59026	1.06580
1506.0135	283.1278	6.6764	789.9314	2690.1129	60.9903	283.7376	-.5254	-.58893	-.58938	1.06448
1503.6655	284.5095	6.6612	789.7905	2690.1129	60.9145	285.1239	-.5296	-.58804	-.58849	1.06316
1501.3175	285.8892	6.6459	789.6501	2690.1129	60.8387	286.5081	-.5336	-.58715	-.58759	1.06184
1498.9695	287.2668	6.6307	789.5104	2690.1129	60.7628	287.8901	-.5377	-.58626	-.58671	1.06051
1496.6215	288.6423	6.6156	789.3712	2690.1129	60.6868	289.2699	-.5416	-.58537	-.58582	1.05918
1494.2735	290.0157	6.6004	789.2326	2690.1129	60.6107	290.6476	-.5455	-.58448	-.58492	1.05786
1491.9255	291.3870	6.5853	789.0945	2690.1129	60.5346	292.0231	-.5494	-.58359	-.58403	1.05653
1489.5775	292.7562	6.5703	788.9571	2690.1129	60.4583	293.3964	-.5532	-.58270	-.58314	1.05520
1487.2297	294.1232	6.5553	788.8201	2690.1129	60.3820	294.7676	-.5569	-.58180	-.58225	1.05387
1484.8817	295.4883	6.5403	788.6838	2690.1129	60.3057	296.1366	-.5606	-.58091	-.58136	1.05253
1482.5337	296.8512	6.5253	788.5480	2690.1129	60.2292	297.5034	-.5642	-.58002	-.58047	1.05120
1480.1857	298.2120	6.5104	788.4127	2690.1129	60.1527	298.8682	-.5678	-.57913	-.57957	1.04986
1477.8377	299.5708	6.4955	788.2780	2690.1129	60.0761	300.2307	-.5713	-.57824	-.57868	1.04853
1475.4897	300.9274	6.4806	788.1438	2690.1129	59.9994	301.5911	-.5747	-.57734	-.57779	1.04719
1473.1416	302.2820	6.4657	788.0101	2690.1129	59.9227	302.9493	-.5781	-.57645	-.57690	1.04585
1470.7937	303.6345	6.4509	787.8770	2690.1129	59.8458	304.3053	-.5814	-.57556	-.57601	1.04451
1468.4456	304.9848	6.4362	787.7444	2690.1129	59.7689	305.6592	-.5847	-.57466	-.57511	1.04316
1466.0977	306.3331	6.4214	787.6124	2690.1129	59.6920	307.0110	-.5880	-.57377	-.57422	1.04182
1463.7496	307.6793	6.4067	787.4808	2690.1129	59.6149	308.3605	-.5911	-.57288	-.57332	1.04048
1461.4017	309.0233	6.3920	787.3498	2690.1129	59.5378	309.7079	-.5942	-.57198	-.57243	1.03913
1459.0537	310.3653	6.3774	787.2193	2690.1129	59.4606	311.0531	-.5973	-.57109	-.57154	1.03778
1456.7057	311.7052	6.3627	787.0893	2690.1129	59.3833	312.3962	-.6003	-.57020	-.57064	1.03643
1454.3577	313.0429	6.3481	786.9598	2690.1129	59.3060	313.7371	-.6033	-.56930	-.56975	1.03508
1452.0097	314.3786	6.3336	786.8309	2690.1129	59.2285	315.0759	-.6062	-.56841	-.56886	1.03373
1449.6617	315.7122	6.3190	786.7024	2690.1129	59.1510	316.4125	-.6090	-.56751	-.56796	1.03238
1447.3137	317.0436	6.3045	786.5744	2690.1130	59.0735	317.7469	-.6118	-.56662	-.56707	1.03103
1444.9657	318.3730	6.2900	786.4470	2690.1129	58.9958	319.0791	-.6146	-.56572	-.56617	1.02967
1442.6177	319.7003	6.2756	786.3200	2690.1130	58.9181	320.4092	-.6173	-.56483	-.56528	1.02831
1440.2697	321.0255	6.2611	786.1935	2690.1130	58.8403	321.7371	-.6199	-.56393	-.56438	1.02696
1437.9217	322.3485	6.2467	786.0675	2690.1130	58.7624	323.0629	-.6225	-.56304	-.56349	1.02560
1435.5737	323.6695	6.2324	785.9420	2690.1130	58.6845	324.3865	-.6250	-.56214	-.56259	1.02424
1433.2257	324.9883	6.2180	785.8170	2690.1130	58.6065	325.7080	-.6275	-.56125	-.56169	1.02288
1430.8777	326.3051	6.2037	785.6924	2690.1130	58.5284	327.0272	-.6300	-.56035	-.56080	1.02151
1428.5297	327.6198	6.1894	785.5684	2690.1130	58.4502	328.3443	-.6324	-.55946	-.55990	1.02015
1426.1817	328.9323	6.1752	785.4448	2690.1129	58.3720	329.6593	-.6347	-.55856	-.55901	1.01878
1423.8337	330.2427	6.1609	785.3216	2690.1130	58.2937	330.9721	-.6370	-.55766	-.55811	1.01742
1421.4859	331.5510	6.1467	785.1990	2690.1130	58.2153	332.2826	-.6392	-.55677	-.55722	1.01605
1419.1378	332.8573	6.1325	785.0768	2690.1130	58.1368	333.5911	-.6414	-.55587	-.55632	1.01468
1416.7898	334.1614	6.1184	784.9551	2690.1130	58.0583	334.8974	-.6435	-.55497	-.55542	1.01331
1414.4418	335.4634	6.1042	784.8338	2690.1130	57.9797	336.2016	-.6456	[illegible]	-.55453	1.01194
1412.0938	336.7634	6.0901	784.7130	2690.1130	57.9010	337.5035	-.6477	-.55318	-.55363	1.01056
1409.7458	338.0612	6.0761	784.5926	2690.1130	57.8223	338.8033	-.6497	-.55228	-.55273	1.00919
1407.3978	339.3569	6.0620	784.4727	2690.1130	57.7434	340.1010	-.6516	-.55139	-.55183	1.00781
1405.0498	340.6505	6.0480	784.3533	2690.1130	57.6646	341.3965	-.6535	-.55049	-.55094	1.00644
1402.7018	341.9420	6.0340	784.2343	2690.1130	57.5856	342.6898	-.6554	-.54959	-.55004	1.00506
1400.3538	343.2314	6.0200	784.1157	2690.1130	57.5065	343.980	-.6572	-.54869	-.54914	1.00368
1398.0059	344.5186	6.0060	783.9976	2690.11[illegible]	57.4274	345.26[illegible]9	-.6589	[illegible]4780	-.54825	1.00230
1395.6579	345.8038	5.9921	783.8800	2690.113[illegible]	57.3482	346.55[illegible]8	-.6606	-.54690	-.54735	1.00092
1393.3099	347.0869	5.9782	783.7628	2690.1131	57.2690	347.8414	-.6623	-.54600	-.54645	.99953
1390.9619	348.3678	5.9643	783.6460	2690.1131	57.1897	349.1239	-.6639	-.54510	-.54555	.99815

1388.6140	349.6466	5.9505	783.5297	2690.1131	57.1102	350.4042	-.6654	-.54420	-.54465	.99676
1386.2660	350.9233	5.9367	783.4139	2690.1131	57.0308	351.6824	-.6670	-.54330	-.54375	.99537
1383.9179	352.1980	5.9229	783.2984	2690.1131	56.9512	352.9585	-.6684	-.54240	-.54285	.99399
1381.5699	353.4705	5.9091	783.1835	2690.1131	56.8716	354.2321	-.6699	-.54151	-.54196	.99260
1379.2219	354.7409	5.8954	783.0690	2690.1131	56.7919	355.504[illegible]	-.6713	-.54061	-.54106	.99121
1376.8739	356.0092	5.8816	782.9549	2690.1131	56.7121	356.7735	-.6726	-.53971	-.54016	.98981
1374.5259	357.2754	5.8679	782.8413	2690.1131	56.6323	358.0409	-.6739	-.53881	-.53926	.98842
1372.1779	358.5394	5.8543	782.7281	2690.1132	56.5523	359.3061	-.6751	-.53791	-.53836	.98702
1369.8299	359.8014	5.8406	782.6153	2690.1131	56.4723	360.5691	-.6764	-.53701	-.53746	.98563
1367.4819	361.0612	5.8270	782.5030	2690.1132	56.3923	361.8300	-.6775	-.53611	-.53656	.98423
1365.1339	362.3189	5.8134	782.3911	2690.1132	56.3121	363.0887	-.6787	-.53521	-.53566	.98283
1362.7859	363.5746	5.7999	782.2796	2690.1132	56.2319	364.3452	-.6797	-.53431	-.53476	.98143
1360.4380	364.8280	5.7863	782.1685	2690.1132	56.1516	365.5996	-.6808	-.53341	-.53386	.98003
1358.0900	366.0794	5.7728	782.0579	2690.1132	56.0713	366.8518	-.6818	-.53251	-.53296	.97863
1355.7420	367.3287	5.7593	781.9477	2690.1132	55.9908	368.1019	-.6827	-.53161	-.53206	.97722
1353.3940	368.5759	5.7458	781.8379	2690.1132	55.9103	369.3498	-.6836	-.53071	-.53116	.97582
1351.0460	369.8209	5.7324	781.7285	2690.1132	55.8298	370.5955	-.6845	-.52981	-.53025	.97441
1348.6980	371.0638	5.7190	781.6195	2690.1132	55.7491	371.8391	-.6853	-.52890	-.52936	.97301
1346.3500	372.3046	5.7056	781.5109	2690.1132	55.6684	373.0805	-.6861	-.52800	-.52845	.97160
1344.0020	373.5433	5.6922	781.4028	2690.1132	55.5876	374.3197	-.6868	-.52710	-.52755	.97019
1341.6540	374.7799	5.6788	781.2951	2690.1132	55.5067	375.5568	-.6875	-.52620	-.52665	.96878
1339.3060	376.0143	5.6655	781.1877	2690.1132	55.4258	376.7917	-.6882	-.52530	-.52575	.96736
1336.9581	377.2467	5.6522	781.0808	2690.1132	55.3448	378.0245	-.6888	-.52440	-.52485	.96595
1334.6100	378.4769	5.6389	780.9742	2690.1132	55.2637	379.2551	-.6894	-.52350	-.52394	.96453
1332.2621	379.7050	5.6257	780.8681	2690.1132	55.1825	380.4835	-.6899	-.52259	-.52305	.96312
1329.9142	380.9309	5.6124	780.7623	2690.1132	55.1013	381.7097	-.6904	-.52169	-.52214	.96170
1327.5661	382.1549	5.5992	780.6570	2690.1132	55.0200	382.9338	-.6909	-.52079	-.52124	.96028
1325.2182	383.3765	5.5860	780.5520	2690.1132	54.9386	384.1557	-.6913	-.51989	-.52034	.95886
1322.8702	384.5962	5.5729	780.4474	2690.1132	54.8572	385.3755	-.6917	-.51898	-.51943	.95744
1320.5222	385.8137	5.5597	780.3432	2690.1132	54.7757	386.5931	-.6920	-.51808	-.51853	.95602
1318.1742	387.0291	5.5466	780.2394	2690.1132	54.6941	387.8086	-.6924	-.51718	-.51763	.95459
1315.8262	388.2424	5.5335	780.1360	2690.1132	54.6124	389.0218	-.6926	-.51628	-.51673	.95317
1313.4782	389.4535	5.5204	780.0330	2690.1132	54.5307	390.2330	-.6928	-.51537	-.51583	.95174
1311.1302	390.6626	5.5073	779.9303	2690.1132	54.4489	391.4419	-.6930	-.51447	-.51492	.95031
1308.7822	391.8695	5.4943	779.8280	2690.1132	54.3670	392.6487	-.6932	-.51357	-.51402	.94888
1306.4342	393.0743	5.4813	779.7261	2690.1132	54.2851	393.8534	-.6933	-.51266	-.51312	.94745
1304.0862	394.2769	5.4683	779.6246	2690.1132	54.2031	395.0558	-.6934	-.51176	-.51221	.94602
1301.7382	395.4775	5.4553	779.5234	2690.1133	54.1210	396.2561	-.6934	-.51086	-.51131	.94459
1299.3902	396.6759	5.4423	779.4226	2690.1132	54.0388	397.4543	-.6934	-.50995	-.51040	.94316
1297.0422	397.8722	5.4294	779.3222	2690.1132	53.9566	398.6503	-.6934	-.50905	-.50950	.94172
1294.6942	399.0664	5.4165	779.2222	2690.1133	53.8743	399.8441	-.6933	-.50814	-.50860	.94028
1292.3462	400.2585	5.4036	779.1225	2690.1133	53.7919	401.0357	-.6932	-.50724	-.50769	.93885
1289.9982	401.4484	5.3907	779.0232	2690.1133	53.7095	402.2252	-.6931	-.50634	-.50679	.93741
1287.6502	402.6362	5.3779	778.9242	2690.1133	53.6270	403.4125	-.6929	-.50543	-.50589	.93597
1285.3022	403.8219	5.3651	778.8256	2690.1133	53.5444	404.5977	-.6927	-.50453	-.50498	.93453
1282.9543	405.0055	5.3522	778.7273	2690.1133	53.4618	405.7807	-.6924	-.50362	-.50408	.93308
1280.6062	406.1869	5.3394	778.6295	2690.1133	53.3790	406.9616	-.6921	-.50272	-.50317	.93164
1278.2583	407.3662	5.3267	778.5319	2690.1132	53.2962	408.1402	-.6918	-.50181	-.50227	.93019
1275.9103	408.5434	5.3139	778.4347	2690.1133	53.2134	409.3167	-.6914	-.50091	-.50136	.92875
1273.5623	409.7185	5.3012	778.3379	2690.1133	53.1304	410.4911	-.6910	-.50000	-.50046	.92730
1271.2143	410.8914	5.2885	778.2414	2690.1133	53.0474	411.6633	-.6906	-.49910	-.49955	.92585
1268.8663	412.0623	5.2758	778.1453	2690.1133	52.9643	412.8333	-.6901	-.49819	-.49865	.92440
1266.5183	413.2309	5.2631	778.0495	2690.1133	52.8812	414.0012	-.6896	-.49729	-.49774	.92295
1264.1703	414.3975	5.2505	777.9541	2690.1133	52.7980	415.1669	-.6891	-.49638	-.49684	.92150
1261.8223	415.5620	5.2378	777.8590	2690.1133	52.7147	416.3304	-.6886	-.49548	-.49593	.92004
1259.4743	416.7243	5.2252	777.7642	2690.1133	52.6313	417.4918	-.6880	-.49457	-.49502	.91859
1257.1263	417.8845	5.2126	777.6698	2690.1133	52.5479	418.6510	-.6873	-.49367	-.49412	.91713

1254.7783	419.0425	5.2000	777.5757	2690.1133	52.4644	419.8080	-.6867	-.49276	-.49321	.91568
1252.4303	420.1984	5.1875	777.4820	2690.1133	52.3808	420.9629	-.6860	-.49185	-.49231	.91422
1250.0823	421.3522	5.1749	777.3886	2690.1133	52.2972	422.1156	-.6852	-.49095	-.49140	.91276
1247.7343	422.5039	5.1624	777.2955	2690.1133	52.2135	423.2662	-.6845	-.49004	-.49049	.91130
1245.3865	423.6534	5.1499	777.2028	2690.1133	52.1297	424.4145	-.6837	-.48913	-.48959	.90984
1243.0384	424.8009	5.1374	777.1104	2690.1133	52.0459	425.5607	-.6829	-.48823	-.48868	.90837
1240.6904	425.9462	5.1249	777.0183	2690.1133	51.9620	426.7048	-.6820	-.48732	-.48778	.90691
1238.3424	427.0893	5.1125	776.9266	2690.1133	51.8780	427.8467	-.6811	-.48642	-.48687	.90544
1235.9944	428.2304	5.1001	776.8352	2690.1133	51.7939	428.9865	-.6802	-.48551	-.48596	.90397
1233.6464	429.3693	5.0876	776.7441	2690.1133	51.7098	430.1241	-.6792	-.48460	-.48505	.90251
1231.2984	430.5061	5.0752	776.6533	2690.1133	51.6256	431.2595	-.6782	-.48369	-.48415	.90104
1228.9504	431.6407	5.0629	776.5629	2690.1133	51.5413	432.3927	-.6772	-.48279	-.48324	.89957
1226.6024	432.7732	5.0505	776.4727	2690.1133	51.4570	433.5238	-.6762	-.48188	-.48233	.89809
1224.2544	433.9036	5.0382	776.3829	2690.1133	51.3726	434.6527	-.6751	-.48097	-.48143	.89662
1221.9064	435.0319	5.0258	776.2934	2690.1133	51.2881	435.7795	-.6740	-.48007	-.48052	.89515
1219.5584	436.1580	5.0135	776.2043	2690.1133	51.2036	436.9041	-.6728	-.47916	-.47961	.89367
1217.2104	437.2820	5.0012	776.1154	2690.1134	51.1190	438.0265	-.6716	-.47825	-.47872	.89219
1214.8625	438.4039	4.9890	776.0269	2690.1134	51.0343	439.1468	-.6704	-.47734	-.47779	.89072
1212.5146	439.5236	4.9767	775.9388	2690.1134	50.9495	440.2649	-.6692	-.47644	-.47689	.88924
1210.1665	440.6412	4.9645	775.8510	2690.1135	50.8647	441.3808	-.6679	-.47553	-.47598	.88776
1207.8185	441.7567	4.9523	775.7636	2690.1134	50.7798	442.4946	-.6667	-.47462	-.47507	.88627
1205.4705	442.8700	4.9401	775.6765	2690.1135	50.6948	443.6062	-.6653	-.47371	-.47417	.88479
1203.1225	443.9812	4.9279	775.5897	2690.1135	50.6098	444.7157	-.6640	-.47280	-.47326	.88331
1200.7745	445.0903	4.9158	775.5034	2690.1135	50.5247	445.8230	-.6626	-.47189	-.47235	.88182
1198.4265	446.1972	4.9037	775.4174	2690.1135	50.4395	446.9281	-.6612	-.47099	-.47144	.88034
1196.0785	447.3020	4.8916	775.3317	2690.1135	50.3542	448.0311	-.6598	-.47008	-.47053	.87885
1193.7305	448.4047	4.8796	775.2463	2690.1135	50.2689	449.1319	-.6583	-.46917	-.46962	.87736
1191.3826	449.5052	4.8675	775.1614	2690.1135	50.1835	450.2305	-.6568	-.46826	-.46871	.87587
1189.0346	450.6036	4.8555	775.0767	2690.1135	50.0980	451.3270	-.6553	-.46735	-.46781	.87438
1186.6866	451.6999	4.8435	774.9924	2690.1135	50.0125	452.4213	-.6538	-.46644	-.46689	.87288
1184.3386	452.7940	4.8315	774.9084	2690.1135	49.9269	453.5135	-.6522	-.46553	-.46599	.87139
1181.9906	453.8860	4.8196	774.8248	2690.1135	49.8412	454.6034	-.6506	-.46462	-.46508	.86989
1179.6426	454.9759	4.8076	774.7415	2690.1135	49.7554	455.6913	-.6490	-.46371	-.46417	.86840
1177.2946	456.0636	4.7957	774.6586	2690.1135	49.6696	456.7769	-.6474	-.46280	-.46326	.86690
1174.9466	457.1492	4.7839	774.5760	2690.1135	49.5837	457.8604	-.6457	-.46189	-.46235	.86540
1172.5986	458.2326	4.7720	774.4937	2690.1135	49.4977	458.9418	-.6440	-.46098	-.46144	.86390
1170.2506	459.3140	4.7601	774.4117	2690.1135	49.4117	460.0209	-.6423	-.46007	-.46053	.86240
1167.9026	460.3931	4.7483	774.3301	2690.1135	49.3255	461.0979	-.6405	-.45916	-.45962	.86089
1165.5546	461.4702	4.7365	774.2488	2690.1135	49.2394	462.1728	-.6387	-.45825	-.45870	.85939
1163.2066	462.5451	4.7247	774.1678	2690.1135	49.1531	463.2455	-.6369	-.45734	-.45780	.85788
1160.8587	463.6178	4.7130	774.0872	2690.1135	49.0668	464.3160	-.6351	-.45643	-.45689	.85638
1158.5107	464.6885	4.7012	774.0068	2690.1135	48.9804	465.3843	-.6333	-.45552	-.45597	.85487
1156.1627	465.7570	4.6895	773.9268	2690.1135	48.8939	466.4506	-.6314	-.45461	-.45506	.85336
1153.8147	466.8233	4.6778	773.8471	2690.1135	48.8074	467.5146	-.6295	-.45370	-.45416	.85185
1151.4667	467.8875	4.6661	773.7677	2690.1136	48.7208	468.5765	-.6276	-.45279	-.45324	.85034
1149.1187	468.9496	4.6545	773.6886	2690.1136	48.6341	469.6362	-.6257	-.45188	-.45233	.84882
1146.7707	470.0095	4.6428	773.6099	2690.1136	48.5473	470.6937	-.6237	-.45096	-.45142	.84731
1144.4227	471.0673	4.6312	773.5314	2690.1135	48.4605	471.7491	-.6217	-.45005	-.45051	.84580
1142.0747	472.1230	4.6196	773.4533	2690.1136	48.3736	472.8023	-.6197	-.44914	-.44960	.84428
1139.7267	473.1765	4.6081	773.3755	2690.1136	48.2866	473.8533	-.6177	-.44823	-.44868	.84276
1137.3787	474.2278	4.5965	773.2980	2690.1136	48.1996	474.9022	-.6156	-.44732	-.44777	.84124
1135.0307	475.2771	4.5850	773.2208	2690.1136	48.1125	475.9490	-.6135	-.44641	-.44686	.83972
1132.6827	476.3242	4.5734	773.1439	2690.1136	48.0253	476.9935	-.6114	-.44549	-.44595	.83820
1130.3347	477.3691	4.5619	773.0673	2690.1136	47.9381	478.0359	-.6093	-.44458	-.44504	.83668
1127.9868	478.4119	4.5505	772.9910	2690.1136	47.8508	479.0762	-.6072	-.44367	-.44412	.83515
1125.6388	479.4526	4.5390	772.9150	2690.1136	47.7634	480.1142	-.6050	-.44276	-.44321	.83363
1123.2908	480.4911	4.5276	772.8393	2690.1136	47.6760	481.1501	-.6028	-.44184	-.44230	.83210

1120.9428	481.5275	4.5161	772.7639	2690.1136	47.5884	482.1839	-.6006	-.44098	-.44139	.83058
1118.5948	482.5617	4.5047	772.6888	2690.1136	47.5009	483.2155	-.5984	-.44002	-.44048	.82905
1116.2468	483.5938	4.4934	772.6140	2690.1136	47.4132	484.2449	-.5962	-.43911	-.43956	.82752
1113.8988	484.6237	4.4820	772.5395	2690.1136	47.3255	485.2722	-.5939	-.43819	-.43865	.82599
1111.5508	485.6515	4.4706	772.4653	2690.1136	47.2377	486.2973	-.5916	-.43728	-.43774	.82445
1109.2028	486.6772	4.4593	772.3914	2690.1136	47.1498	487.3202	-.5893	-.43637	-.43683	.82292
1106.8549	487.7007	4.4480	772.3178	2690.1136	47.0619	488.3409	-.5870	-.43545	-.43591	.82138
1104.5069	488.7220	4.4367	772.2444	2690.1136	46.9739	489.3595	-.5847	-.43454	-.43500	.81985
1102.1589	489.7413	4.4254	772.1714	2690.1136	46.8858	490.3760	-.5823	-.43363	-.43408	.81831
1099.8109	490.7584	4.4142	772.0986	2690.1136	46.7977	491.3902	-.5799	-.43271	-.43317	.81677
1097.4629	491.7733	4.4030	772.0261	2690.1136	46.7095	492.4024	-.5775	-.43180	-.43226	.81523
1095.1149	492.7861	4.3917	771.9539	2690.1136	46.6212	493.4123	-.5751	-.43089	-.43134	.81369
1092.7670	493.7967	4.3805	771.8820	2690.1136	46.5328	494.4201	-.5727	-.42997	-.43043	.81215
1090.4189	494.8053	4.3694	771.8104	2690.1136	46.4444	495.4257	-.5702	-.42906	-.42951	.81061
1088.0710	495.8116	4.3582	771.7390	2690.1136	46.3559	496.4292	-.5678	-.42815	-.42860	.80906
1085.7229	496.8158	4.3470	771.6680	2690.1136	46.2674	497.4305	-.5653	-.42723	-.42769	.80752
1083.3749	497.8179	4.3359	771.5972	2690.1136	46.1788	498.4297	-.5628	-.42632	-.42677	.80597
1081.0269	498.8178	4.3248	771.5267	2690.1136	46.0901	499.4266	-.5602	-.42540	-.42586	.80442
1078.6790	499.8156	4.3137	771.4564	2690.1136	46.0013	500.4214	-.5577	-.42449	-.42494	.80287
1076.3310	500.8112	4.3026	771.3865	2690.1136	45.9125	501.4141	-.5551	-.42357	-.42403	.80132
1073.9830	501.8047	4.2916	771.3168	2690.1136	45.8236	502.4046	-.5526	-.42266	-.42312	.79977
1071.6350	502.7960	4.2805	771.2474	2690.1136	45.7347	503.3929	-.5500	-.42174	-.42220	.79822
1069.2870	503.7852	4.2695	771.1782	2690.1136	45.6456	504.3791	-.5474	-.42083	-.42129	.79667
1066.9390	504.7722	4.2585	771.1094	2690.1136	45.5565	505.3631	-.5448	-.41991	-.42037	.79511
1064.5910	505.7571	4.2475	771.0408	2690.1136	45.4674	506.3449	-.5421	-.41900	-.41946	.79356
1062.2430	506.7398	4.2365	770.9724	2690.1136	45.3781	507.3246	-.5395	-.41808	-.41854	.79200
1059.8950	507.7204	4.2256	770.9044	2690.1136	45.2888	508.3021	-.5368	-.41717	-.41763	.79044
1057.5470	508.6989	4.2146	770.8365	2690.1136	45.1995	509.2774	-.5341	-.41625	-.41671	.78888
1055.1990	509.6752	4.2037	770.7690	2690.1136	45.1100	510.2506	-.5314	-.41534	-.41579	.78732
1052.8510	510.6493	4.1928	770.7017	2690.1136	45.0205	511.2216	-.5287	-.41442	-.41488	.78576
1050.5030	511.6213	4.1819	770.6347	2690.1136	44.9310	512.1905	-.5260	-.41351	-.41397	.78419
1048.1550	512.5911	4.1710	770.5680	2690.1137	44.8413	513.1572	-.5233	-.41259	-.41305	.78263
1045.8071	513.5588	4.1602	770.5015	2690.1137	44.7516	514.1217	-.5205	-.41168	-.41213	.78106
1043.4591	514.5243	4.1493	770.4353	2690.1136	44.6619	515.0841	-.5177	-.41076	-.41122	.77950
1041.1110	515.4877	4.1385	770.3693	2690.1137	44.5720	516.0443	-.5150	-.40984	-.41030	.77793
1038.7631	516.4490	4.1277	770.3036	2690.1137	44.4821	517.0023	-.5122	-.40893	-.40939	.77636
1036.4151	517.4081	4.1169	770.2382	2690.1137	44.3922	517.9582	-.5093	-.40801	-.40847	.77479
1034.0672	518.3650	4.1061	770.1730	2690.1137	44.3021	518.9119	-.5065	-.40710	-.40755	.77322
1031.7191	519.3198	4.0954	770.1080	2690.1137	44.2120	519.8634	-.5037	-.40618	-.40664	.77165
1029.3711	520.2724	4.0846	770.0434	2690.1137	44.1219	520.8128	-.5009	-.40526	-.40572	.77007
1027.0231	521.2229	4.0739	769.9789	2690.1137	44.0316	521.7600	-.4980	-.40435	-.40481	.76850
1024.6751	522.1712	4.0632	769.9148	2690.1137	43.9413	522.7051	-.4951	-.40343	-.40389	.76692
1022.3271	523.1174	4.0525	769.8508	2690.1137	43.8510	523.6480	-.4922	-.40251	-.40297	.76534
1019.9791	524.0614	4.0418	769.7872	2690.1137	43.7605	524.5888	-.4893	-.40160	-.40206	.76377
1017.6311	525.0033	4.0312	769.7237	2690.1137	43.6700	525.5273	-.4864	-.40068	-.40114	.76219
1015.2831	525.9430	4.0205	769.6606	2690.1137	43.5795	526.4637	-.4835	-.39976	-.40022	.76061
1012.9352	526.8805	4.0099	769.5976	2690.1137	43.4888	527.3979	-.4806	-.39885	-.39931	.75902
1010.5871	527.8160	3.9992	769.5349	2690.1136	43.3981	528.3301	-.4777	-.39793	-.39838	.75744
1008.2392	528.7492	3.9886	769.4725	2690.1136	43.3074	529.2600	-.4747	-.39701	-.39747	.75586
1005.8912	529.6803	3.9780	769.4102	2690.1136	43.2166	530.1877	-.4717	-.39610	-.39655	.75427
1003.5431	530.6093	3.9674	769.3481	2690.1137	43.1257	531.1133	-.4688	-.39518	-.39563	.75269
1001.1951	531.5361	3.9568	769.2863	2690.1137	43.0347	532.0368	-.4658	-.39426	-.39472	.75110
998.8471	532.4607	3.9463	769.2246	2690.1137	42.9437	532.9581	-.4628	-.39334	-.39380	.74951
996.4991	533.3832	3.9357	769.1631	2690.1137	42.8527	533.8772	-.4598	-.39243	-.39289	.74792
994.1511	534.3036	3.9251	769.1017	2690.1137	42.7616	534.7941	-.4568	-.39151	-.39197	.74633
991.8031	535.2218	3.9146	769.0406	2690.1137	42.6704	535.7089	-.4537	-.39059	-.39105	.74474
989.4551	536.1378	3.9040	768.9797	2690.1137	42.5791	536.6215	-.4507	-.38967	-.39013	.74315

987.1071	537.0517	3.8934	768.9189	2690.1137	42.4878	537.5320	-.4477	-.38876	-.38922	.74155
984.7591	537.9634	3.8829	768.8584	2690.1137	42.3965	538.4402	-.4446	-.38784	-.38830	.73996
982.4111	538.8729	3.8724	768.7980	2690.1137	42.3050	539.3464	-.4415	-.38692	-.38738	.73836
980.0631	539.7804	3.8618	768.7378	2690.1137	42.2136	540.2503	-.4384	-.38600	-.38646	.73677
977.7151	540.6856	3.8513	768.6778	2690.1137	42.1220	541.1521	-.4354	-.38509	-.38554	.73517
975.3671	541.5887	3.8408	768.6180	2690.1137	42.0304	542.0518	-.4323	-.38417	-.38463	.73357
973.0191	542.4897	3.8303	768.5584	2690.1137	41.9387	542.9493	-.4291	-.38325	-.38371	.73197
970.6711	543.3885	3.8197	768.4990	2690.1137	41.8470	543.8446	-.4260	-.38233	-.38279	.73037
968.3231	544.2851	3.8092	768.4397	2690.1137	41.7552	544.7377	-.4229	-.38142	-.38187	.72877
965.9751	545.1796	3.7987	768.3807	2690.1137	41.6634	545.6287	-.4198	-.38050	-.38095	.72716
963.6271	546.0719	3.7882	768.3218	2690.1137	41.5715	546.5175	-.4166	-.37958	-.38004	.72556
961.2791	546.9621	3.7778	768.2631	2690.1137	41.4795	547.4042	-.4134	-.37866	-.37912	.72395
958.9311	547.8501	3.7673	768.2046	2690.1137	41.3875	548.2887	-.4103	-.37774	-.37821	.72235
956.5831	548.7360	3.7568	768.1463	2690.1137	41.2954	549.1710	-.4071	-.37683	-.37728	.72074
954.2351	549.6197	3.7463	768.0882	2690.1137	41.2033	550.0512	-.4039	-.37591	-.37637	.71913
951.8871	550.5013	3.7359	768.0302	2690.1137	41.1111	550.9292	-.4007	-.37499	-.37545	.71752
949.5391	551.3807	3.7254	767.9725	2690.1137	41.0188	551.8051	-.3975	-.37407	-.37453	.71591
947.1911	552.2579	3.7150	767.9149	2690.1137	40.9265	552.6787	-.3943	-.37315	-.37361	.71430
944.8431	553.1330	3.7045	767.8575	2690.1137	40.8342	553.5503	-.3911	-.37224	-.37269	.71269
942.4951	554.0059	3.6941	767.8003	2690.1137	40.7417	554.4196	-.3878	-.37132	-.37178	.71108
940.1471	554.8767	3.6836	767.7432	2690.1137	40.6492	555.2868	-.3846	-.37040	-.37086	.70946
937.7991	555.7453	3.6732	767.6864	2690.1137	40.5567	556.1518	-.3813	-.36948	-.36994	.70785
935.4511	556.6118	3.6628	767.6297	2690.1137	40.4641	557.0147	-.3781	-.36856	-.36902	.70623
933.1031	557.4761	3.6524	767.5732	2690.1137	40.3714	557.8754	-.3748	-.36765	-.36810	.70461
930.7551	558.3382	3.6420	767.5169	2690.1137	40.2787	558.7339	-.3715	-.36673	-.36719	.70300
928.4071	559.1982	3.6316	767.4608	2690.1137	40.1859	559.5903	-.3682	-.36581	-.36627	.70138
926.0591	560.0561	3.6212	767.4049	2690.1137	40.0930	560.4445	-.3649	-.36489	-.36535	.69976
923.7111	560.9118	3.6108	767.3491	2690.1137	40.0001	561.2966	-.3616	-.36397	-.36443	.69813
921.3631	561.7653	3.6004	767.2935	2690.1137	39.9072	562.1465	-.3583	-.36305	-.36351	.69651
919.0151	562.6167	3.5900	767.2381	2690.1137	39.8142	562.9942	-.3550	-.36213	-.36260	.69489
916.6671	563.4659	3.5796	767.1829	2690.1137	39.7211	563.8398	-.3517	-.36122	-.36167	.69326
914.3191	564.3129	3.5693	767.1278	2690.1137	39.6280	564.6832	-.3483	-.36030	-.36076	.69164
911.9711	565.1578	3.5589	767.0730	2690.1137	39.5348	565.5244	-.3450	-.35938	-.35984	.69001
909.6231	566.0006	3.5485	767.0183	2690.1137	39.4415	566.3635	-.3416	-.35846	-.35892	.68838
907.2751	566.8412	3.5382	766.9638	2690.1137	39.3482	567.2004	-.3383	-.35754	-.35800	.68676
904.9271	567.6796	3.5278	766.9094	2690.1137	39.2549	568.0351	-.3349	-.35662	-.35708	.68513
902.5791	568.5158	3.5175	766.8553	2690.1137	39.1614	568.8677	-.3315	-.35570	-.35616	.68350
900.2311	569.3500	3.5071	766.8013	2690.1137	39.0680	569.6981	-.3281	-.35479	-.35525	.68186
897.8831	570.1819	3.4968	766.7475	2690.1137	38.9744	570.5264	-.3247	-.35387	-.35433	.68023
895.5351	571.0117	3.4865	766.6939	2690.1137	38.8808	571.3525	-.3213	-.35295	-.35341	.67860
893.1871	571.8394	3.4762	766.6404	2690.1137	38.7872	572.1764	-.3179	-.35203	-.35249	.67696
890.8391	572.6649	3.4658	766.5871	2690.1138	38.6935	572.9982	-.3145	-.35111	-.35157	.67533
888.4911	573.4882	3.4555	766.5340	2690.1137	38.5997	573.8178	-.3111	-.35019	-.35065	.67369
886.1431	574.3094	3.4452	766.4811	2690.1137	38.5059	574.6352	-.3076	-.34927	-.34973	.67205
883.7951	575.1284	3.4349	766.4283	2690.1137	38.4120	575.4505	-.3042	-.34835	-.34881	.67042
881.4471	575.9452	3.4246	766.3758	2690.1137	38.3181	576.2636	-.3008	-.34744	-.34789	.66878
879.0991	576.7599	3.4143	766.3234	2690.1137	38.2241	577.0746	-.2973	-.34652	-.34698	.66714
876.7511	577.5725	3.4041	766.2711	2690.1137	38.1300	577.8834	-.2938	-.34560	-.34605	.66549
874.4031	578.3829	3.3938	766.2191	2690.1137	38.0359	578.6900	-.2904	-.34468	-.34514	.66385
872.0551	579.1911	3.3835	766.1672	2690.1137	37.9418	579.4944	-.2869	-.34376	-.34422	.66221
869.7072	579.9971	3.3732	766.1155	2690.1137	37.8476	580.2967	-.2834	-.34284	-.34330	.66056
867.3592	580.8010	3.3630	766.0640	2690.1137	37.7533	581.0968	-.2799	-.34192	-.34238	.65892
865.0112	581.6028	3.3527	766.0126	2690.1137	37.6589	581.8946	-.2764	-.34100	-.34146	.65727
862.6632	582.4024	3.3425	765.9614	2690.1137	37.5646	582.6906	-.2729	-.34008	-.34054	.65563
860.3152	583.1998	3.3322	765.9104	2690.1137	37.4701	583.4843	-.2694	-.33916	-.33963	.65398
857.9672	583.9951	3.3220	765.8595	2690.1137	37.3756	584.2758	-.2659	-.33824	-.33870	.65233
855.6192	584.7882	3.3117	765.8089	2690.1137	37.2811	585.0651	-.2624	-.33732	-.33779	.65068

853.2712	585.5792	3.3015	765.7583	2690.1137	37.1865	585.8522	-.2588	-.33641	-.33687	.64903
850.9232	586.3680	3.2913	765.7080	2690.1138	37.0918	586.6373	-.2553	-.33549	-.33595	.64737
848.5752	587.1546	3.2811	765.6578	2690.1137	36.9971	587.4201	-.2518	-.33457	-.33502	.64572
846.2272	587.9391	3.2708	765.6078	2690.1137	36.9023	588.2008	-.2482	-.33365	-.33411	.64407
843.8792	588.7214	3.2606	765.5580	2690.1138	36.8075	588.9793	-.2447	-.33273	-.33319	.64241
841.5312	589.5016	3.2504	765.5084	2690.1137	36.7126	589.7556	-.2411	-.33181	-.33227	.64076
839.1832	590.2796	3.2402	765.4589	2690.1138	36.6176	590.5298	-.2375	-.33089	-.33135	.63910
836.8352	591.0554	3.2300	765.4095	2690.1137	36.5227	591.3018	-.2340	-.32997	-.33043	.63744
834.4872	591.8291	3.2198	765.3604	2690.1137	36.4276	592.0717	-.2304	-.32905	-.32951	.63578
832.1392	592.6006	3.2096	765.3114	2690.1137	36.3325	592.8393	-.2268	-.32813	-.32859	.63412
829.7912	593.3700	3.1995	765.2626	2690.1137	36.2373	593.6049	-.2232	-.32721	-.32767	.63246
827.4432	594.1372	3.1893	765.2139	2690.1137	36.1421	594.3682	-.2196	-.32629	-.32675	.63080
825.0952	594.9023	3.1791	765.1655	2690.1137	36.0469	595.1294	-.2160	-.32537	-.32583	.62914
822.7472	595.6652	3.1689	765.1171	2690.1137	35.9515	595.8885	-.2124	-.32445	-.32491	.62747
820.3992	596.4259	3.1588	765.0690	2690.1138	35.8562	596.6454	-.2088	-.32353	-.32399	.62581
818.0512	597.1845	3.1486	765.0210	2690.1138	35.7607	597.4001	-.2052	-.32261	-.32307	.62414
815.7032	597.9409	3.1385	764.9732	2690.1138	35.6652	598.1526	-.2016	-.32169	-.32215	.62248
813.3552	598.6952	3.1283	764.9256	2690.1137	35.5697	598.9030	-.1979	-.32077	-.32123	.62081
811.0072	599.4473	3.1182	764.8781	2690.1138	35.4741	599.6512	-.1943	-.31985	-.32031	.61914
808.6592	600.1972	3.1080	764.8307	2690.1138	35.3785	600.3973	-.1906	-.31893	-.31939	.61747
806.3112	600.9450	3.0979	764.7836	2690.1138	35.2827	601.1412	-.1870	-.31801	-.31848	.61580
803.9632	601.6906	3.0878	764.7366	2690.1138	35.1870	601.8829	-.1833	-.31709	-.31755	.61413
801.6152	602.4340	3.0776	764.6898	2690.1138	35.0912	602.6225	-.1797	-.31617	-.31663	.61246
799.2672	603.1753	3.0675	764.6431	2690.1138	34.9953	603.3599	-.1760	-.31525	-.31571	.61078
796.9192	603.9145	3.0574	764.5966	2690.1138	34.8994	604.0951	-.1724	-.31433	-.31479	.60911
794.5712	604.6514	3.0473	764.5503	2690.1138	34.8034	604.8282	-.1687	-.31341	-.31387	.60743
792.2232	605.3862	3.0372	764.5041	2690.1137	34.7074	605.5591	-.1650	-.31249	-.31295	.60576
789.8753	606.1189	3.0271	764.4581	2690.1138	34.6113	606.2879	-.1613	-.31157	-.31204	.60408
787.5272	606.8494	3.0170	764.4123	2690.1138	34.5152	607.0145	-.1577	-.31065	-.31111	.60240
785.1792	607.5777	3.0069	764.3666	2690.1138	34.4190	607.7389	-.1540	-.30973	-.31019	.60073
782.8312	608.3039	2.9968	764.3211	2690.1138	34.3228	608.4612	-.1503	-.30881	-.30928	.59905
780.4832	609.0279	2.9867	764.2757	2690.1138	34.2265	609.1813	-.1466	-.30789	-.30835	.59737
778.1352	609.7498	2.9766	764.2305	2690.1138	34.1302	609.8992	-.1429	-.30697	-.30743	.59568
775.7872	610.4694	2.9666	764.1855	2690.1137	34.0338	610.6150	-.1392	-.30605	-.30651	.59400
773.4392	611.1870	2.9565	764.1406	2690.1137	33.9373	611.3286	-.1355	-.30513	-.30559	.59232
771.0912	611.9023	2.9464	764.0959	2690.1137	33.8409	612.0400	-.1317	-.30421	-.30467	.59063
768.7432	612.6155	2.9364	764.0513	2690.1137	33.7443	612.7493	-.1280	-.30329	-.30375	.58895
766.3952	613.3266	2.9263	764.0069	2690.1137	33.6477	613.4565	-.1243	-.30237	-.30283	.58726
764.0472	614.0355	2.9162	763.9627	2690.1137	33.5511	614.1614	-.1206	-.30145	-.30191	.58558
761.6992	614.7422	2.9062	763.9186	2690.1137	33.4544	614.8642	-.1168	-.30053	-.30099	.58389
759.3512	615.4468	2.8961	763.8746	2690.1137	33.3576	615.5648	-.1131	-.29961	-.30007	.58220
757.0032	616.1492	2.8861	763.8309	2690.1138	33.2608	616.2633	-.1094	-.29869	-.29915	.58051
754.6552	616.8494	2.8760	763.7872	2690.1137	33.1640	616.9596	-.1056	-.29777	-.29823	.57882
752.3072	617.5475	2.8660	763.7438	2690.1137	33.0670	617.6538	-.1019	-.29685	-.29731	.57713
749.9592	618.2434	2.8560	763.7005	2690.1138	32.9701	618.3457	-.0981	-.29593	-.29639	.57544
747.6112	618.9372	2.8459	763.6573	2690.1138	32.8731	619.0356	-.0944	-.29501	-.29547	.57374
745.2632	619.6288	2.8359	763.6143	2690.1138	32.7760	619.7232	-.0906	-.29409	-.29455	.57205
742.9152	620.3182	2.8259	763.5715	2690.1138	32.6789	620.4087	-.0868	-.29317	-.29363	.57035
740.5672	621.0055	2.8159	763.5288	2690.1138	32.5818	621.0920	-.0831	-.29225	-.29271	.56866
738.2192	621.6906	2.8058	763.4863	2690.1138	32.4846	621.7732	-.0793	-.29133	-.29179	.56696
735.8712	622.3736	2.7958	763.4439	2690.1138	32.3873	622.4522	-.0755	-.29041	-.29086	.56526
733.5232	623.0544	2.7858	763.4017	2690.1138	32.2900	623.1291	-.0717	-.28949	-.28995	.56357
731.1752	623.7330	2.7758	763.3596	2690.1138	32.1926	623.8037	-.0680	-.28857	-.28903	.56187
728.8272	624.4095	2.7658	763.3177	2690.1137	32.0952	624.4762	-.0642	-.28764	-.28810	.56017
726.4792	625.0838	2.7558	763.2760	2690.1138	31.9978	625.1466	-.0604	-.28672	-.28718	.55847
724.1312	625.7559	2.7458	763.2344	2690.1138	31.9002	625.8148	-.0566	-.28580	-.28626	.55676
721.7832	626.4259	2.7358	763.1929	2690.1138	31.8027	626.4808	-.0528	-.28488	-.28534	.55506

719.4352	627.0937	2.7258	763.1516	2690.1138	31.7051	627.1447	-.0490	-.28396	-.28442	.55336
717.0872	627.7594	2.7159	763.1105	2690.1138	31.6074	627.8064	-.0452	-.28304	-.28350	.55165
714.7392	628.4229	2.7059	763.0695	2690.1138	31.5097	628.4659	-.0414	-.28212	-.28258	.54995
712.3912	629.0842	2.6959	763.0287	2690.1138	31.4120	629.1233	-.0376	-.28120	-.28166	.54824
710.0432	629.7434	2.6859	762.9880	2690.1138	31.3142	629.7785	-.0338	-.28028	-.28074	.54654
707.6952	630.4004	2.6759	762.9475	2690.1138	31.2163	630.4315	-.0300	-.27936	-.27982	.54483
705.3472	631.0553	2.6660	762.9071	2690.1138	31.1184	631.0824	-.0261	-.27844	-.27890	.54312
702.9992	631.7080	2.6560	762.8669	2690.1138	31.0205	631.7311	-.0223	-.27752	-.27797	.54141
700.6512	632.3585	2.6460	762.8268	2690.1138	30.9225	632.3777	-.0185	-.27660	-.27706	.53970
698.3032	633.0069	2.6361	762.7869	2690.1138	30.8244	633.0221	-.0147	-.27568	-.27614	.53799
695.9552	633.6531	2.6261	762.7471	2690.1138	30.7263	633.6643	-.0109	-.27475	-.27521	.53628
693.6072	634.2971	2.6162	762.7075	2690.1138	30.6282	634.3044	-.0070	-.27383	-.27429	.53456
691.2592	634.9390	2.6062	762.6680	2690.1138	30.5300	634.9423	-.0032	-.27291	-.27337	.53285
688.9112	635.5787	2.5963	762.6287	2690.1138	30.4317	635.5780	.0006	-.27199	-.27245	.53113
686.5632	636.2162	2.5863	762.5895	2690.1138	30.3335	636.2116	.0045	-.27107	-.27153	.52942
684.2152	636.8516	2.5764	762.5505	2690.1138	30.2351	636.8430	.0083	-.27015	-.27061	.52770
681.8672	637.4849	2.5665	762.5116	2690.1138	30.1367	637.4723	.0121	-.26923	-.26969	.52599
679.5192	638.1159	2.5565	762.4729	2690.1138	30.0383	638.0994	.0160	-.26831	-.26877	.52427
677.1712	638.7448	2.5466	762.4343	2690.1137	29.9398	638.7243	.0198	-.26739	-.26784	.52255
674.8232	639.3716	2.5367	762.3959	2690.1138	29.8413	639.3471	.0237	-.26647	-.26693	.52083
672.4752	639.9962	2.5267	762.3576	2690.1138	29.7427	639.9677	.0275	-.26554	-.26601	.51911
670.1272	640.6186	2.5168	762.3195	2690.1137	29.6441	640.5861	.0314	-.26462	-.26508	.51739
667.7792	641.2388	2.5069	762.2815	2690.1138	29.5455	641.2024	.0352	-.26370	-.26416	.51567
665.4312	641.8569	2.4970	762.2437	2690.1137	29.4468	641.8165	.0391	-.26278	-.26324	.51394
663.0832	642.4729	2.4871	762.2060	2690.1138	29.3480	642.4284	.0430	-.26186	-.26232	.51222
660.7352	643.0866	2.4772	762.1685	2690.1138	29.2492	643.0382	.0468	-.26094	-.26140	.51049
658.3872	643.6982	2.4672	762.1311	2690.1138	29.1503	643.6458	.0507	-.26002	-.26048	.50877
656.0392	644.3077	2.4573	762.0939	2690.1138	29.0515	644.2513	.0545	-.25910	-.25956	.50704
653.6912	644.9149	2.4474	762.0568	2690.1138	28.9525	644.8546	.0584	-.25818	-.25864	.50532
651.3432	645.5200	2.4375	762.0198	2690.1138	28.8535	645.4557	.0623	-.25725	-.25771	.50359
648.9952	646.1230	2.4276	761.9830	2690.1138	28.7545	646.0547	.0662	-.25633	-.25679	.50186
646.6472	646.7238	2.4177	761.9464	2690.1138	28.6554	646.6515	.0700	-.25541	-.25587	.50013
644.2992	647.3224	2.4078	761.9099	2690.1138	28.5563	647.2461	.0739	-.25449	-.25495	.49840
641.9512	647.9189	2.3979	761.8735	2690.1137	28.4571	647.8386	.0778	-.25357	-.25403	.49667
639.6032	648.5132	2.3881	761.8373	2690.1138	28.3579	648.4289	.0817	-.25265	-.25311	.49494
637.2552	649.1053	2.3782	761.8012	2690.1138	28.2587	649.0171	.0855	-.25173	-.25219	.49321
634.9072	649.6953	2.3683	761.7653	2690.1138	28.1594	649.6031	.0894	-.25081	-.25127	.49147
632.5592	650.2831	2.3584	761.7295	2690.1138	28.0600	650.1869	.0933	-.24988	-.25034	.48974
630.2112	650.8687	2.3485	761.6938	2690.1138	27.9606	650.7686	.0972	-.24896	-.24942	.48800
627.8632	651.4522	2.3387	761.6583	2690.1137	27.8612	651.3481	.1011	-.24804	-.24850	.48627
625.5152	652.0335	2.3288	761.6230	2690.1138	27.7617	651.9254	.1050	-.24712	-.24758	.48453
623.1672	652.6127	2.3189	761.5878	2690.1137	27.6622	652.5006	.1088	-.24620	-.24666	.48280
620.8192	653.1897	2.3090	761.5527	2690.1137	27.5626	653.0736	.1127	-.24528	-.24574	.48106
618.4712	653.7645	2.2992	761.5178	2690.1138	27.4630	653.6445	.1166	-.24436	-.24482	.47932
616.1232	654.3372	2.2893	761.4830	2690.1138	27.3633	654.2131	.1205	-.24343	-.24390	.47758
613.7752	654.9077	2.2794	761.4484	2690.1138	27.2636	654.7797	.1244	-.24251	-.24297	.47584
611.4272	655.4760	2.2696	761.4139	2690.1138	27.1639	655.3440	.1283	-.24159	-.24205	.47410
609.0792	656.0422	2.2597	761.3796	2690.1137	27.0641	655.9062	.1322	-.24067	-.24113	.47236
606.7312	656.6062	2.2499	761.3454	2690.1137	26.9643	656.4662	.1361	-.23975	-.24021	.47062
604.3832	657.1680	2.2400	761.3113	2690.1138	26.8644	657.024[illegible]	.1400	-.23883	-.23929	.46887
602.0352	657.7277	2.2301	761.2774	2690.1137	26.7645	657.579[illegible]	.1439	-.23791	-.23837	.46713
599.6872	658.2852	2.2203	761.2436	2690.1137	26.6645	658.133[illegible]	.1478	-.23699	-.23744	.46538
597.3392	658.8406	2.2104	761.2099	2690.1138	26.5645	658.68[illegible]	.1517	-.23[illegible]06	-.23653	.46364
594.9912	659.3938	2.2006	761.1764	2690.1138	26.4645	659.2[illegible]	.1556	-.23514	-.23560	.46189
592.6432	659.9448	2.1907	761.1431	2690.1138	26.3644	659.73[illegible]	.1595	-.23422	-.23468	.46015
590.2952	660.4937	2.1809	761.1099	2690.1138	26.2643	660.3259	.1636	-.23330	-.23376	.45840
587.9472	661.0404	2.1711	761.0768	2690.1137	26.1641	660.8686	.1673	-.23238	-.23284	.45665

585.5992	661.5849	2.1612	761.0439	2690.1137	26.0639	661.4092	.1712	-.23146	-.23192	.45490
583.2512	662.1273	2.1514	761.0111	2690.1138	25.9637	661.9476	.1751	-.23053	-.23099	.45315
580.9032	662.6675	2.1415	760.9784	2690.1138	25.8634	662.4838	.1790	-.22961	-.23007	.45140
578.5552	663.2056	2.1317	760.9459	2690.1137	25.7630	663.0179	.1829	-.22869	-.22915	.44965
576.2072	663.7415	2.1219	760.9135	2690.1137	25.6627	663.5498	.1868	-.22777	-.22823	.44790
573.8592	664.2752	2.1120	760.8813	2690.1138	25.5622	664.0796	.1907	-.22685	-.22731	.44615
571.5112	664.8067	2.1022	760.8492	2690.1137	25.4618	664.6072	.1946	-.22593	-.22639	.44439
569.1632	665.3361	2.0924	760.8172	2690.1138	25.3613	665.1326	.1986	-.22500	-.22546	.44264
566.8153	665.8633	2.0825	760.7854	2690.1138	25.2608	665.6558	.2025	-.22408	-.22454	.44088
564.4673	666.3884	2.0727	760.7537	2690.1137	25.1602	666.1769	.2064	-.22316	-.22362	.43913
562.1192	666.9113	2.0629	760.7222	2690.1137	25.0596	666.6959	.2103	-.22224	-.22270	.43737
559.7712	667.4320	2.0530	760.6908	2690.1137	24.9589	667.2126	.2142	-.22132	-.22178	.43562
557.4232	667.9506	2.0432	760.6595	2690.1137	24.8582	667.7273	.2181	-.22040	-.22086	.43386
555.0752	668.4670	2.0334	760.6283	2690.1138	24.7575	668.2397	.2220	-.21948	-.21994	.43210
552.7272	668.9813	2.0235	760.5973	2690.1138	24.6567	668.7500	.2260	-.21855	-.21901	.43034
550.3792	669.4934	2.0137	760.5665	2690.1137	24.5559	669.2581	.2299	-.21763	-.21809	.42858
548.0312	670.0033	2.0039	760.5358	2690.1137	24.4550	669.7641	.2338	-.21671	-.21717	.42682
545.6832	670.5111	1.9941	760.5052	2690.1139	24.3541	670.2679	.2377	-.21579	-.21626	.42506
543.3352	671.0167	1.9843	760.4749	2690.1143	24.2532	670.7695	.2417	-.21487	-.21537	.42330
540.9872	671.5202	1.9744	760.4446	2690.1143	24.1522	671.2690	.2456	-.21395	-.21441	.42154
538.6392	672.0214	1.9646	760.4144	2690.1143	24.0512	671.7663	.2496	-.21302	-.21348	.41977
536.2911	672.5205	1.9548	760.3843	2690.1143	23.9502	672.2614	.2535	-.21210	-.21256	.41801
533.9431	673.0175	1.9449	760.3544	2690.1143	23.8491	672.7544	.2574	-.21118	-.21164	.41624
531.5952	673.5122	1.9351	760.3246	2690.1143	23.7480	673.2452	.2613	-.21026	-.21072	.41448
529.2472	674.0048	1.9253	760.2949	2690.1143	23.6468	673.7338	.2652	-.20934	-.20980	.41271
526.8992	674.4952	1.9155	760.2654	2690.1143	23.5456	674.2203	.2691	-.20842	-.20888	.41095
524.5512	674.9835	1.9056	760.2360	2690.1143	23.4444	674.7047	.2731	-.20749	-.20795	.40918
522.2032	675.4696	1.8958	760.2067	2690.1143	23.3431	675.1868	.2770	-.20657	-.20703	.40741
519.8552	675.9536	1.8859	760.1776	2690.1143	23.2418	675.6668	.2809	-.20565	-.20611	.40565
517.5072	676.4354	1.8761	760.1485	2690.1143	23.1405	676.1446	.2848	-.20473	-.20519	.40388
515.1592	676.9150	1.8663	760.1196	2690.1143	23.0391	676.6203	.2887	-.20381	-.20427	.40211
512.8112	677.3925	1.8564	760.0909	2690.1143	22.9377	677.0938	.2927	-.20289	-.20335	.40034
510.4632	677.8677	1.8466	760.0622	2690.1143	22.8363	677.5652	.2966	-.20196	-.20242	.39857
508.1152	678.3409	1.8367	760.0337	2690.1143	22.7348	678.0344	.3005	-.20104	-.20150	.39680
505.7672	678.8118	1.8269	760.0053	2690.1143	22.6333	678.5014	.3044	-.20012	-.20058	.39503
503.4192	679.2806	1.8170	759.9771	2690.1143	22.5317	678.9662	.3084	-.19920	-.19966	.39325
501.0712	679.7473	1.8072	759.9490	2690.1143	22.4301	679.4289	.3123	-.19828	-.19874	.39148
498.7232	680.2118	1.7973	759.9210	2690.1143	22.3285	679.8895	.3162	-.19736	-.19782	.38971
496.3752	680.6741	1.7875	759.8931	2690.1143	22.2269	680.3478	.3201	-.19644	-.19690	.38793
494.0272	681.1342	1.7776	759.8654	2690.1143	22.1252	680.8040	.3241	-.19551	-.19597	.38616
491.6792	681.5922	1.7678	759.8378	2690.1143	22.0235	681.2581	.3280	-.19459	-.19505	.38438
489.3312	682.0480	1.7579	759.8103	2690.1143	21.9217	681.7099	.3319	-.19367	-.19413	.38261
486.9832	682.5017	1.7480	759.7829	2690.1143	21.8199	682.1597	.3358	-.19275	-.19321	.38083
484.6352	682.9532	1.7382	759.7557	2690.1143	21.7181	682.6072	.3398	-.19183	-.19228	.37905
482.2872	683.4025	1.7283	759.7286	2690.1143	21.6163	683.0526	.3437	-.19091	-.19137	.37727
479.9392	683.8497	1.7184	759.7016	2690.1143	21.5144	683.4958	.3476	-.18999	-.19045	.37550
477.5912	684.2947	1.7085	759.6747	2690.1143	21.4124	683.9369	.3515	-.18906	-.18953	.37372
475.2432	684.7375	1.6987	759.6480	2690.1143	21.3105	684.3758	.3555	-.18814	-.18860	.37194
472.8952	685.1782	1.6888	759.6214	2690.1143	21.2085	684.8125	.3594	-.18722	-.18768	.37016
470.5472	685.6167	1.6789	759.5949	2690.1143	21.1065	685.2471	.3634	-.18630	-.18676	.36838
468.1992	686.0531	1.6690	759.5686	2690.1143	21.0045	685.6795	.3673	-.18538	-.18583	.36660
465.8512	686.4873	1.6591	759.5423	2690.1143	20.9024	686.1098	.3712	-.18446	-.18492	.36482
463.5032	686.9193	1.6492	759.5162	2690.1143	20.8003	686.5378	.3752	-.18354	-.18400	.36303
461.1552	687.3491	1.6393	759.4902	2690.1143	20.6981	686.9638	.3791	-.18262	-.18308	.36125
458.8072	687.7768	1.6294	759.4644	2690.1143	20.5960	687.3875	.3830	-.18169	-.18216	.35947
456.4592	688.2024	1.6195	759.4386	2690.1143	20.4938	687.8091	.3870	-.18077	-.18123	.35768
454.1112	688.6258	1.6095	759.4130	2690.1143	20.3915	688.2286	.3909	-.17985	-.18031	.35590

451.7631	689.0470	1.5996	759.3875	2690.1143	20.2893	688.6458	.3949	-.17893	-.17939	.35411
449.4151	689.4660	1.5897	759.3621	2690.1143	20.1870	689.0609	.3988	-.17801	-.17847	.35233
447.0671	689.8829	1.5798	759.3369	2690.1143	20.0846	689.4739	.4028	-.17709	-.17755	.35054
444.7192	690.2976	1.5698	759.3118	2690.1143	19.9823	689.8847	.4067	-.17617	-.17663	.34876
442.3712	690.7102	1.5599	759.2868	2690.1143	19.8799	690.2933	.4106	-.17525	-.17571	.34697
440.0232	691.1206	1.5499	759.2619	2690.1143	19.7775	690.6997	.4146	-.17433	-.17479	.34518
437.6752	691.5288	1.5400	759.2371	2690.1143	19.6751	691.1040	.4185	-.17340	-.17386	.34339
435.3272	691.9349	1.5300	759.2125	2690.1143	19.5726	691.5061	.4225	-.17248	-.17294	.34161
432.9792	692.3388	1.5201	759.1879	2690.1143	19.4701	691.9061	.4264	-.17156	-.17203	.33982
430.6312	692.7405	1.5101	759.1635	2690.1143	19.3676	692.3039	.4304	-.17064	-.17110	.33803
428.2832	693.1401	1.5001	759.1393	2690.1143	19.2650	692.6995	.4344	-.16972	-.17018	.33624
425.9352	693.5375	1.4901	759.1151	2690.1144	19.1625	693.0930	.4383	-.16880	-.16926	.33445
423.5872	693.9328	1.4802	759.0910	2690.1143	19.0599	693.4843	.4423	-.16788	-.16834	.33266
421.2392	694.3259	1.4702	759.0671	2690.1143	18.9572	693.8735	.4463	-.16696	-.16742	.33087
418.8912	694.7168	1.4602	759.0433	2690.1143	18.8546	694.2605	.4502	-.16604	-.16649	.32907
416.5432	695.1056	1.4502	759.0196	2690.1143	18.7519	694.6453	.4542	-.16512	-.16558	.32728
414.1952	695.4922	1.4401	758.9961	2690.1143	18.6492	695.0279	.4582	-.16420	-.16466	.32549
411.8472	695.8767	1.4301	758.9726	2690.1143	18.5465	695.4084	.4621	-.16328	-.16374	.32370
409.4992	696.2590	1.4201	758.9493	2690.1143	18.4437	695.7868	.4661	-.16236	-.16281	.32190
407.1512	696.6391	1.4100	758.9261	2690.1143	18.3409	696.1629	.4701	-.16144	-.16190	.32011
404.8032	697.0171	1.4000	758.9030	2690.1143	18.2381	696.5369	.4741	-.16052	-.16097	.31831
402.4552	697.3929	1.3899	758.8800	2690.1143	18.1353	696.9088	.4780	-.15959	-.16005	.31652
400.1072	697.7665	1.3799	758.8571	2690.1143	18.0324	697.2785	.4820	-.15867	-.15914	.31472
397.7592	698.1380	1.3698	758.8344	2690.1144	17.9295	697.6460	.4860	-.15775	-.15822	.31293
395.4112	698.5073	1.3597	758.8117	2690.1143	17.8266	698.0113	.4900	-.15683	-.15729	.31113
393.0632	698.8745	1.3496	758.7892	2690.1143	17.7237	698.3745	.4940	-.15591	-.15637	.30934
390.7152	699.2395	1.3395	758.7668	2690.1143	17.6207	698.7356	.4980	-.15499	-.15545	.30754
388.3672	699.6023	1.3294	758.7445	2690.1143	17.5178	699.0944	.5020	-.15407	-.15453	.30574
386.0192	699.9630	1.3193	758.7223	2690.1143	17.4148	699.4511	.5060	-.15315	-.15361	.30395
383.6712	700.3216	1.3091	758.7002	2690.1143	17.3118	699.8057	.5100	-.15223	-.15269	.30215
381.3232	700.6779	1.2990	758.6783	2690.1143	17.2087	700.1580	.5140	-.15131	-.15177	.30035
378.9752	701.0321	1.2888	758.6564	2690.1143	17.1057	700.5083	.5180	-.15039	-.15086	.29855
376.6272	701.3842	1.2787	758.6347	2690.1144	17.0026	700.8563	.5221	-.14947	-.14993	.29675
374.2792	701.7341	1.2685	758.6131	2690.1144	16.8995	701.2022	.5261	-.14855	-.14901	.29495
371.9312	702.0818	1.2583	758.5916	2690.1144	16.7964	701.5459	.5301	-.14763	-.14809	.29315
369.5832	702.4273	1.2481	758.5702	2690.1144	16.6932	701.8875	.5341	-.14672	-.14717	.29135
367.2352	702.7708	1.2379	758.5489	2690.1144	16.5901	702.2269	.5382	-.14580	-.14625	.28955
364.8872	703.1120	1.2276	758.5277	2690.1144	16.4869	702.5641	.5422	-.14488	-.14534	.28775
362.5392	703.4511	1.2174	758.5067	2690.1143	16.3837	702.8992	.5463	-.14396	-.14442	.28595
360.1912	703.7880	1.2071	758.4857	2690.1144	16.2805	703.2321	.5503	-.14304	-.14350	.28415
357.8432	704.1228	1.1969	758.4649	2690.1144	16.1772	703.5628	.5544	-.14212	-.14258	.28235
355.4952	704.4554	1.1866	758.4441	2690.1144	16.0740	703.8914	.5585	-.14120	-.14166	.28054
353.1472	704.7859	1.1763	758.4235	2690.1144	15.9707	704.2178	.5625	-.14028	-.14074	.27874
350.7992	705.1142	1.1659	758.4029	2690.1144	15.8674	704.5421	.5666	-.13936	-.13982	.27694
348.4512	705.4403	1.1556	758.3825	2690.1144	15.7641	704.8642	.5707	-.13844	-.13890	.27514
346.1032	705.7643	1.1452	758.3622	2690.1144	15.6608	705.1841	.5748	-.13752	-.13798	.27333
343.7552	706.0861	1.1349	758.3420	2690.1144	15.5575	705.5019	.5789	-.13661	-.13707	.27153
341.4072	706.4058	1.1245	758.3219	2690.1144	15.4542	705.817[illegible]	.5830	-.13569	-.13615	.26973
339.0592	706.7233	1.1141	758.3019	2690.1144	15.3508	706.13[illegible]	.5871	-.13477	-.13523	.26792
336.7112	707.0387	1.1036	758.2820	2690.1144	15.2474	706.44[illegible]	.5912	-.13385	-.13431	.26612
334.3632	707.3519	1.0932	758.2622	2690.1144	15.1440	706.75[illegible]	.5953	-.13293	-.13339	.26431
332.0152	707.6629	1.0827	758.2425	2690.1144	15.0407	707.05[illegible]	.5994	-.13201	-.13247	.26251
329.6672	707.9718	1.0722	758.2229	2690.1143	14.9373	707.3531	.6036	-.1[illegible]110	-.13155	.26070
327.3192	708.2785	1.0617	758.2034	2690.1144	14.8338	707.6657	.6077	-.13018	-.13064	.25890
324.9712	708.5831	1.0512	758.1840	2690.1143	14.7304	707.9661	.6119	-.12926	-.12972	.25709
322.6232	708.8855	1.0406	758.1647	2690.1144	14.6270	708.2644	.6160	-.12834	-.12880	.25529
320.2752	709.1858	1.0300	758.1455	2690.1144	14.5235	708.5606	.6202	-.12742	-.12788	.25348

317.9272	709.4839	1.0194	758.1263	2690.1144	14.4201	708.8545	.6244	-.12651	-.12696	.25168
315.5792	709.7799	1.0087	758.1073	2690.1144	14.3166	709.1463	.6286	-.12559	-.12605	.24987
313.2312	710.0737	.9981	758.0884	2690.1143	14.2132	709.4360	.6328	-.12467	-.12513	.24807
310.8832	710.3653	.9874	758.0696	2690.1143	14.1097	709.7235	.6370	-.12376	-.12421	.24626
308.5352	710.6548	.9766	758.0508	2690.1143	14.0062	710.0088	.6412	-.12284	-.12330	.24445
306.1872	710.9421	.9659	758.0322	2690.1143	13.9028	710.2919	.6454	-.12192	-.12237	.24265
303.8392	711.2273	.9551	758.0136	2690.1143	13.7993	710.5729	.6497	-.12101	-.12146	.24084
301.4912	711.5104	.9442	757.9951	2690.1143	13.6958	710.8518	.6539	-.12009	-.12055	.23904
299.1432	711.7913	.9334	757.9767	2690.1143	13.5923	711.1284	.6582	-.11917	-.11963	.23723
296.7952	712.0700	.9225	757.9584	2690.1143	13.4889	711.4030	.6625	-.11826	-.11872	.23542
294.4472	712.3466	.9115	757.9401	2690.1143	13.3854	711.6753	.6668	-.11734	-.11780	.23362
292.0992	712.6211	.9005	757.9220	2690.1143	13.2819	711.9455	.6711	-.11643	-.11689	.23181
289.7512	712.8934	.8895	757.9039	2690.1143	13.1785	712.2135	.6754	-.11551	-.11597	.23001
287.4032	713.1635	.8784	757.8859	2690.1143	13.0750	712.4793	.6797	-.11460	-.11506	.22820
285.0552	713.4315	.8672	757.8679	2690.1143	12.9716	712.7430	.6841	-.11368	-.11414	.22640
282.7072	713.6974	.8561	757.8501	2690.1143	12.8681	713.0045	.6885	-.11277	-.11323	.22459
280.3592	713.9611	.8448	757.8323	2690.1143	12.7647	713.2639	.6929	-.11186	-.11231	.22279
278.0112	714.2226	.8335	757.8145	2690.1143	12.6613	713.5211	.6973	-.11094	-.11140	.22098
275.6632	714.4821	.8222	757.7968	2690.1143	12.5579	713.7762	.7017	-.11003	-.11049	.21918
273.3152	714.7393	.8108	757.7792	2690.1143	12.4545	714.0290	.7061	-.10912	-.10957	.21737
270.9672	714.9945	.7994	757.7617	2690.1143	12.3511	714.2797	.7106	-.10820	-.10866	.21557
268.6192	715.2475	.7878	757.7442	2690.1143	12.2478	714.5283	.7151	-.10729	-.10775	.21376
266.2712	715.4983	.7762	757.7268	2690.1143	12.1445	714.7747	.7196	-.10638	-.10683	.21196
263.9232	715.7470	.7646	757.7094	2690.1143	12.0412	715.0189	.7241	-.10547	-.10592	.21016
261.5752	715.9936	.7529	757.6921	2690.1143	11.9379	715.2609	.7287	-.10456	-.10501	.20836
259.2272	716.2380	.7411	757.6748	2690.1143	11.8346	715.5008	.7332	-.10365	-.10410	.20655
256.8792	716.4803	.7292	757.6576	2690.1143	11.7314	715.7386	.7378	-.10273	-.10319	.20475
254.5312	716.7205	.7172	757.6404	2690.1143	11.6282	715.9741	.7425	-.10183	-.10228	.20295
252.1832	716.9585	.7052	757.6232	2690.1143	11.5251	716.2076	.7471	-.10092	-.10137	.20115
249.8352	717.1944	.6930	757.6061	2690.1143	11.4219	716.4388	.7518	-.10001	-.10046	.19935
247.4872	717.4281	.6808	757.5890	2690.1143	11.3189	716.6679	.7565	-.09910	-.09955	.19755
245.1392	717.6597	.6684	757.5720	2690.1143	11.2158	716.8948	.7613	-.09819	-.09864	.19575
242.7912	717.8892	.6560	757.5549	2690.1143	11.1128	717.1195	.7660	-.09728	-.09774	.19396
240.4432	718.1166	.6434	757.5379	2690.1143	11.0099	717.3421	.7709	-.09638	-.09683	.19216
238.0952	718.3418	.6307	757.5209	2690.1143	10.9070	717.5626	.7757	-.09547	-.09592	.19036
235.7472	718.5649	.6179	757.5038	2690.1143	10.8042	717.7808	.7806	-.09457	-.09502	.18857
233.3992	718.7859	.6050	757.4868	2690.1143	10.7015	717.9969	.7855	-.09366	-.09411	.18678
231.0512	719.0047	.5919	757.4698	2690.1143	10.5988	718.2109	.7905	-.09276	-.09321	.18498
228.7032	719.2214	.5786	757.4527	2690.1143	10.4962	718.4226	.7955	-.09185	-.09230	.18319
226.3552	719.4360	.5652	757.4356	2690.1143	10.3937	718.6322	.8005	-.09095	-.09140	.18141
224.0072	719.6485	.5516	757.4184	2690.1143	10.2913	718.8397	.8056	-.09005	-.09050	.17962
221.6592	719.8589	.5378	757.4012	2690.1143	10.1890	719.0450	.8107	-.08915	-.08960	.17783
219.3112	720.0672	.5238	757.3840	2690.1143	10.0868	719.2481	.8159	-.08825	-.08870	.17605
216.9632	720.2734	.5096	757.3666	2690.1143	9.9848	719.4491	.8212	-.08735	-.08780	.17427
214.6152	720.4774	.4952	757.3492	2690.1143	9.8829	719.6479	.8265	-.08646	-.08691	.17249
212.2672	720.6794	.4804	757.3316	2690.1143	9.7811	719.8445	.8318	-.08556	-.08601	.17071
209.9192	720.8792	.4654	757.3139	2690.1143	9.6795	720.0389	.8373	-.08467	-.08512	.16894
207.5712	721.0770	.4501	757.2960	2690.1143	9.5780	720.2313	.8428	-.08378	-.08422	.16717
205.2232	721.2727	.4344	757.2779	2690.1143	9.4768	720.4214	.8483	-.08289	-.08334	.16540
202.8752	721.4662	.4183	757.2595	2690.1143	9.3758	720.6094	.8540	-.08200	-.08244	.16364
200.5272	721.6577	.4018	757.2409	2690.1143	9.2751	720.7952	.8597	-.08112	-.08156	.16188
198.1792	721.8471	.3847	757.2220	2690.1143	9.1747	720.9789	.8655	-.08024	-.08067	.16013
195.8312	722.0345	.3671	757.2027	2690.1143	9.0746	721.1604	.8714	-.07936	-.07980	.15838
193.4832	722.2198	.3489	757.1829	2690.1143	8.9749	721.3397	.8774	-.07848	-.07892	.15664
191.1352	722.4031	.3299	757.1625	2690.1143	8.8757	721.5168	.8836	-.07761	-.07804	.15491
188.7872	722.5843	.3099	757.1415	2690.1143	8.7770	721.6918	.8898	-.07674	-.07717	.15319
186.4392	722.7634	.2889	757.1196	2690.1143	8.6790	721.8647	.8962	-.07588	-.07631	.15148

184.0912	722.9406	.2666	757.0966	2690.1143	8.5818	722.0354	.9027	-.07503	-.07546	.14978
181.7432	723.1158	.2425	757.0721	2690.1143	8.4857	722.2039	.9094	-.07419	-.07461	.14810
179.3952	723.2890	.2161	757.0457	2690.1143	8.3910	722.3702	.9163	-.07336	-.07377	.14645
177.0472	723.4603	.1865	757.0165	2690.1143	8.2983	722.5344	.9235	-.07254	-.07295	.14483
174.6992	723.6297	.1518	756.9827	2690.1143	8.2088	722.6964	.9309	-.07176	-.07215	.14327
172.3512	723.7973	.1069	756.9398	2690.1143	8.1256	722.8563	.9386	-.07103	-.07138	.14182
170.0000	723.9635	.0000	756.8393	2690.1143	8.0812	723.0142	.9515	.00000	-.07071	.14104

ORIGINAL PAGE IS
OF POOR QUALITY

-.13212844-02	-.13209752-02	-.13208355-02	-.13207204-02	-.13206167-02
-.13205193-02	-.13204256-02	-.13203343-02	-.13202443-02	-.13201550-02
-.13200660-02	-.13199769-02	-.13197973-02	-.13196149-02	-.13193336-02
-.13190413-02	-.13187360-02	-.13184164-02	-.13180817-02	-.13177314-02
-.13173650-02	-.13169821-02	-.13165823-02	-.13161654-02	-.13157311-02
-.13152790-02	-.13148094-02	-.13143209-02	-.13138134-02	-.13132866-02
-.13127403-02	-.13121743-02	-.13115884-02	-.13109822-02	-.13103555-02
-.13097082-02	-.13090400-02	-.13083507-02	-.13076398-02	-.13069069-02
-.13061517-02	-.13053740-02	-.13045735-02	-.13037499-02	-.13029029-02
-.13020321-02	-.13011373-02	-.13002181-02	-.12992741-02	-.12982997-02
-.12972919-02	-.12962495-02	-.12951713-02	-.12940563-02	-.12929028-02
-.12917096-02	-.12904750-02	-.12891973-02	-.12878752-02	-.12865120-02
-.12851070-02	-.12836589-02	-.12821658-02	-.12806260-02	-.12790375-02
-.12773982-02	-.12757055-02	-.12739583-02	-.12721554-02	-.12702941-02
-.12683713-02	-.12663836-02	-.12643272-02	-.12621979-02	-.12599896-02
-.12576880-02	-.12552832-02	-.12527650-02	-.12501210-02	-.12473360-02
-.12443909-02	-.12412568-02	-.12378979-02	-.12342667-02	-.12302944-02
-.12258846-02	-.12209452-02	-.12172559-02	-.12131169-02	-.12083336-02
-.12056826-02	-.12028256-02	-.11997025-02	-.11962165-02	-.11921902-02
-.11875104-02	-.11821083-02	-.11754237-02	-.11663624-02	-.11528251-02
-.93333753-04	-.97989280-04	-.10219337-03	-.10632649-03	-.11042398-03
-.11449926-03	-.11855926-03	-.12260799-03	-.12664797-03	-.13068099-03
-.13470838-03	-.13873099-03	-.14676491-03	-.15478681-03	-.16680296-03
-.17880414-03	-.19079480-03	-.20277770-03	-.21475443-03	-.22672612-03
-.23869367-03	-.25065771-03	-.26261873-03	-.27457716-03	-.28653325-03
-.29848725-03	-.31043949-03	-.32239006-03	-.33433936-03	-.34628744-03
-.35823434-03	-.37018009-03	-.38212467-03	-.39406807-03	-.40601029-03
-.41795129-03	-.42989100-03	-.44182938-03	-.45376646-03	-.46570222-03
-.47763656-03	-.48956939-03	-.50150054-03	-.51343004-03	-.52535773-03
-.53728345-03	-.54920714-03	-.56112860-03	-.57304779-03	-.58496525-03
-.59688117-03	-.60879518-03	-.62070701-03	-.63261617-03	-.64452243-03
-.65642530-03	-.66832435-03	-.68021902-03	-.69210886-03	-.70399301-03
-.71587096-03	-.72774221-03	-.73960615-03	-.75146205-03	-.76330937-03
-.77514719-03	-.78697474-03	-.79879115-03	-.81059543-03	-.82238662-03
-.83416354-03	-.84592475-03	-.85766893-03	-.86939437-03	-.88109905-03
-.89277932-03	-.90443197-03	-.91605328-03	-.92763881-03	-.93918307-03
-.95067923-03	-.96211761-03	-.97348573-03	-.98476700-03	-.99593755-03
-.10069630-02	-.10176060-02	-.10248962-02	-.10318289-02	-.10385341-02
-.10417911-02	-.10449707-02	-.10480507-02	-.10509950-02	-.10537381-02
-.10562313-02	-.10584376-02	-.10601377-02	-.10608884-02	-.10597862-02
.31415927+01	.31383373+01	.31369402+01	.31358357+01	.31348781+01
.31340114+01	.31332076+01	.31324499+01	.31317277+01	.31310337+01
.31303627+01	.31297108+01	.31284527+01	.31272425+01	.31254928+01
.31238010+01	.31221486+01	.31205241+01	.31189209+01	.31173337+01
.31157591+01	.31141939+01	.31126361+01	.31110839+01	.31095356+01
.31079902+01	.31064466+01	.31049027+01	.31033570+01	.31018091+01
.31002583+01	.30987041+01	.30971463+01	.30955843+01	.30940179+01
.30924466+01	.30908704+01	.30892887+01	.30877011+01	.30861069+01
.30845058+01	.30828977+01	.30812822+01	.30796592+01	.30780283+01
.30763894+01	.30747423+01	.30730865+01	.30714217+01	.30697390+01
.30680334+01	.30663043+01	.30645505+01	.30627711+01	.30609649+01
.30591305+01	.30572666+01	.30553716+01	.30534449+01	.30514919+01
.30495130+01	.30475067+01	.30454716+01	.30434063+01	.30413090+01
.30391778+01	.30370107+01	.30348070+01	.30325665+01	.30302869+01
.30279655+01	.30255994+01	.30231853+01	.30207195+01	.30181964+01
.30156015+01	.30129255+01	.30101590+01	.30072909+01	.30043073+01

$-1/R$

$d(-1/R)/d\theta$

θ

```
.30011907+01    .29979139+01    .29944034+01    .29907351+01    .29867245+01
.29823214+01    .29774430+01    .29738310+01    .29698065+01    .29651861+01
.29626375+01    .29598994+01    .29569152+01    .29535938+01    .29497680+01
.29453323+01    .29402233+01    .29339134+01    .29253699+01    .29126055+01
```

```
@BRKPT PUNCH$

@ED,Y 20.,94350*FIL.PAX14DH=325
THIS IS A FORTRAN FILE
CASE UPPER ASSUMED
EDIT 14.05H03/20=21:31=(0,)
EDIT
LINES:751 FIELDATA
CPU:.865   CTP:.014   SUPS:8.633

@ED,Y 21.,94350*FIL.HYX14DH=325
THIS IS A FORTRAN FILE
CASE UPPER ASSUMED
EDIT 14.05H03/20=21:31=(0,)
EDIT
LINES:60 FIELDATA
CPU:.081   CTP:.004   SUPS:4.409

@PACK 94350*FIL.
FURPUR 27=Q  03/20/78  21:31:23
END PACK. TEXT=256,TOC=1,SYM=95,REL=2,ABS=14

CPU:.048   CTP:.004   SUPS:1.827

@FIN
```

ORIGINAL PAGE IS
OF POOR QUALITY

THE 170 INCH HOLE, X-BAND

FREQ= 8.41500 B= 625.02497

R=2029.63474 THETANMAX= 72.06430 NMAX= 51

N	X(N)	Y(N)	BETA(N)
1	1931.00000	.00000	72.06430
2	1928.65221	1.70890	72.13100
3	1926.30420	3.41960	72.16820
4	1923.95610	5.13120	72.18880
5	1921.60820	6.84320	72.19870
6	1919.26010	8.55550	72.20110
7	1916.91209	10.26760	72.19670
8	1914.56419	11.97950	72.18430
9	1912.21609	13.69100	72.16620
10	1909.86819	15.40170	72.14370
11	1907.52010	17.11180	72.11780
12	1905.17220	18.82090	72.08910
13	1902.82410	20.52920	72.05810
14	1900.47620	22.23640	72.02510
15	1898.12830	23.94250	71.99030
16	1895.78030	25.64750	71.95410
17	1893.43230	27.35140	71.91580
18	1891.08430	29.05410	71.87550
19	1888.73630	30.75550	71.83350
20	1886.38820	32.45550	71.79000
21	1884.04021	34.15420	71.74510
22	1881.69231	35.85140	71.69920
23	1879.34430	37.54720	71.65220
24	1876.99620	39.24160	71.60430
25	1874.64819	40.93440	71.55560
26	1872.30029	42.62560	71.50610
27	1869.95230	44.31540	71.45590
28	1867.60420	46.00350	71.40510
29	1865.25639	47.69000	71.35370
30	1862.90829	49.37500	71.30170
31	1860.56030	51.05840	71.24920
32	1858.21240	52.74000	71.19620
33	1855.86420	54.42020	71.14280
34	1853.51630	56.09860	71.08890
35	1851.16840	57.77530	71.03440
36	1848.82040	59.45030	70.97930
37	1846.47240	61.12360	70.92370
38	1844.12440	62.79520	70.86760
39	1841.77640	64.46510	70.81110
40	1839.42841	66.13320	70.75410
41	1837.08031	67.79950	70.69670
42	1834.73250	69.46400	70.63900
43	1832.38440	71.12680	70.58090
44	1830.03641	72.78780	70.52240
45	1827.68840	74.44700	70.46370
46	1825.34039	76.10440	70.40460
47	1822.99240	77.76000	70.34520
48	1820.64439	79.41370	70.28550

49	1818.29660	81.06550	70.22550
50	1815.94850	82.71560	70.16530
51	1813.60049	84.36390	70.10480
52	1811.25240	86.01030	70.04410
53	1808.90440	87.65480	69.98310
54	1806.55640	89.29740	69.92190
55	1804.20840	90.93820	69.86050
56	1801.86060	92.57700	69.79890
57	1799.51250	94.21410	69.73700
58	1797.16451	95.84920	69.67500
59	1794.81650	97.48250	69.61270
60	1792.46860	99.11370	69.55030
61	1790.12050	100.74320	69.48770
62	1787.77251	102.37080	69.42480
63	1785.42450	103.99640	69.36180
64	1783.07660	105.62010	69.29860
65	1780.72861	107.24190	69.23520
66	1778.38060	108.86180	69.17160
67	1776.03259	110.47970	69.10780
68	1773.68460	112.09580	69.04390
69	1771.33659	113.70990	68.97970
70	1768.98860	115.32200	68.91540
71	1766.64059	116.93220	68.85100
72	1764.29260	118.54050	68.78630
73	1761.94460	120.14690	68.72150
74	1759.59660	121.75120	68.65650
75	1757.24860	123.35360	68.59140
76	1754.90060	124.95410	68.52610
77	1752.55260	126.55260	68.46070
78	1750.20461	128.14920	68.39510
79	1747.85660	129.74370	68.32940
80	1745.50870	131.33630	68.26360
81	1743.16080	132.92680	68.19750
82	1740.81281	134.51550	68.13140
83	1738.46480	136.10220	68.06510
84	1736.11670	137.68690	67.99870
85	1733.76880	139.26960	67.93210
86	1731.42070	140.85040	67.86550
87	1729.07280	142.42910	67.79870
88	1726.72470	144.00590	67.73170
89	1724.37669	145.58070	67.66460
90	1722.02870	147.15340	67.59750
91	1719.68069	148.72420	67.53010
92	1717.33270	150.29300	67.46270
93	1714.98489	151.85970	67.39510
94	1712.63690	153.42450	67.32750
95	1710.28880	154.98730	67.25970
96	1707.94080	156.54800	67.19170
97	1705.59280	158.10680	67.12370
98	1703.24480	159.66360	67.05560
99	1700.89680	161.21830	66.98730
100	1698.54880	162.77100	66.91890
101	1696.20081	164.32180	66.85050
102	1693.85291	165.87040	66.78190
103	1691.50481	167.41710	66.71320
104	1689.15680	168.96180	66.64430
105	1686.80890	170.50440	66.57540

ORIGINAL PAGE IS
OF POOR QUALITY

106	1684.46091	172.04500	66.50640
107	1682.11290	173.58360	66.43730
108	1679.76489	175.12020	66.36800
109	1677.41701	176.65470	66.29870
110	1675.06900	178.18720	66.22920
111	1672.72099	179.71770	66.15970
112	1670.37300	181.24610	66.09000
113	1668.02499	182.77250	66.02030
114	1665.67700	184.29690	65.95050
115	1663.32899	185.81930	65.88050
116	1660.98100	187.33960	65.81050
117	1658.63300	188.85790	65.74030
118	1656.28510	190.37410	65.67010
119	1653.93700	191.88830	65.59980
120	1651.58910	193.40050	65.52930
121	1649.24100	194.91060	65.45880
122	1646.89310	196.41860	65.38820
123	1644.54510	197.92470	65.31750
124	1642.19710	199.42870	65.24670
125	1639.84900	200.93060	65.17570
126	1637.50101	202.43050	65.10470
127	1635.15311	203.92830	65.03370
128	1632.80510	205.42410	64.96250
129	1630.45711	206.91780	64.89120
130	1628.10910	208.40950	64.81980
131	1625.76109	209.89920	64.74840
132	1623.41310	211.38670	64.67680
133	1621.06509	212.87220	64.60520
134	1618.71710	214.35570	64.53340
135	1616.36909	215.83710	64.46160
136	1614.02110	217.31650	64.38970
137	1611.67310	218.79380	64.31770
138	1609.32510	220.26900	64.24560
139	1606.97710	221.74220	64.17340
140	1604.62930	223.21320	64.10120
141	1602.28120	22[illegible].68220	64.02880
142	1599.93320	226.14920	63.95640
143	1597.58521	227.61420	63.88380
144	1595.23720	229.07700	63.81120
145	1592.88921	230.53780	63.73850
146	1590.54120	231.99650	63.66570
147	1588.19321	233.45320	63.59280
148	1585.84520	234.90780	63.51990
149	1583.49719	236.36030	63.44680
150	1581.14920	237.81080	63.37370
151	1578.80119	239.25910	63.30050
152	1576.45320	240.70540	63.22720
153	1574.10519	242.14960	63.15380
154	1571.75720	243.59180	63.08030
155	1569.40939	245.03180	63.00680
156	1567.06129	246.46980	62.93310
157	1564.71330	247.90580	62.85940
158	1562.36530	249.33970	62.78560
159	1560.01730	250.77150	62.71170
160	1557.66930	252.20120	62.63770
161	1555.32130	253.62880	62.56360
162	1552.97330	255.05430	62.48950

163	1550.62540	256.47780	62.41530
164	1548.27750	257.89910	62.34100
165	1545.92931	259.31850	62.26660
166	1543.58130	260.73570	62.19220
167	1541.23340	262.15090	62.11760
168	1538.88541	263.56390	62.04300
169	1536.53740	264.97490	61.96830
170	1534.18941	266.38380	61.89350
171	1531.84140	267.79060	61.81870
172	1529.49339	269.19530	61.74380
173	1527.14540	270.59790	61.66880
174	1524.79739	271.99850	61.59370
175	1522.44940	273.39700	61.51850
176	1520.10139	274.79330	61.44330
177	1517.75340	276.18760	61.36800
178	1515.40540	277.57980	61.29260
179	1513.05740	278.97000	61.21720
180	1510.70950	280.35800	61.14160
181	1508.36150	281.74390	61.06600
182	1506.01350	283.12780	60.99030
183	1503.66550	284.50950	60.91450
184	1501.31750	285.88920	60.83870
185	1498.96950	287.26680	60.76280
186	1496.62151	288.64230	60.68680
187	1494.27350	290.01570	60.61070
188	1491.92551	291.38700	60.53460
189	1489.57750	292.75620	60.45830
190	1487.22971	294.12320	60.38200
191	1484.88170	295.48830	60.30570
192	1482.53371	296.85120	60.22920
193	1480.18570	298.21200	60.15270
194	1477.83771	299.57080	60.07610
195	1475.48970	300.92740	59.99940
196	1473.14160	302.28200	59.92270
197	1470.79370	303.63450	59.84580
198	1468.44560	304.98480	59.76890
199	1466.09770	306.33310	59.69200
200	1463.74960	307.67930	59.61490
201	1461.40170	309.02330	59.53780
202	1459.05370	310.36530	59.46060
203	1456.70570	311.70520	59.38330
204	1454.35770	313.04290	59.30600
205	1452.00970	314.37860	59.22850
206	1449.66170	315.71220	59.15100
207	1447.31371	317.04360	59.07350
208	1444.96570	318.37300	58.99580
209	1442.61771	319.70030	58.91810
210	1440.26970	321.02550	58.84030
211	1437.92171	322.34850	58.76240
212	1435.57370	323.66950	58.68450
213	1433.22569	324.98830	58.60650
214	1430.87770	326.30510	58.52840
215	1428.52969	327.61980	58.45020
216	1426.18170	328.93230	58.37200
217	1423.83369	330.24270	58.29370
218	1421.48590	331.55100	58.21530
219	1419.13780	332.85730	58.13680

ORIGINAL PAGE IS
OF POOR QUALITY

220	1416.78979	334.16140	58.05830
221	1414.44180	335.46340	57.97970
222	1412.09380	336.76340	57.90100
223	1409.74580	338.06120	57.82230
224	1407.39780	339.35690	57.74340
225	1405.04980	340.65050	57.66460
226	1402.70180	341.94200	57.58560
227	1400.35381	343.23140	57.50650
228	1398.00591	344.51860	57.42740
229	1395.65790	345.80380	57.34820
230	1393.30991	347.08690	57.26900
231	1390.96190	348.36780	57.18970
232	1388.61400	349.64660	57.11020
233	1386.26601	350.92330	57.03080
234	1383.91789	352.19800	56.95120
235	1381.56990	353.47050	56.87160
236	1379.22189	354.74090	56.79190
237	1376.87390	356.00920	56.71210
238	1374.52589	357.27540	56.63230
239	1372.17790	358.53940	56.55230
240	1369.82990	359.80140	56.47230
241	1367.48190	361.06120	56.39230
242	1365.13390	362.31890	56.31210
243	1362.78590	363.57460	56.23190
244	1360.43800	364.82800	56.15160
245	1358.09000	366.07940	56.07130
246	1355.74200	367.32870	55.99080
247	1353.39400	368.57590	55.91030
248	1351.04601	369.82090	55.82980
249	1348.69800	371.06380	55.74910
250	1346.35001	372.30460	55.66840
251	1344.00200	373.54330	55.58760
252	1341.65401	374.77990	55.50670
253	1339.30600	376.01430	55.42580
254	1336.95810	377.24670	55.34480
255	1334.61000	378.47690	55.26370
256	1332.26210	379.70500	55.18250
257	1329.91420	380.93090	55.10130
258	1327.56610	382.15490	55.02000
259	1325.21820	383.37650	54.93860
260	1322.87019	384.59620	54.85720
261	1320.52220	385.81370	54.77570
262	1318.17419	387.02910	54.69410
263	1315.82620	388.24240	54.61240
264	1313.47820	389.45350	54.53070
265	1311.13020	390.66260	54.44890
266	1308.78220	391.86950	54.36700
267	1306.43420	393.07430	54.28510
268	1304.08620	394.27690	54.20310
269	1301.73820	395.47750	54.12100
270	1299.39020	396.67590	54.03880
271	1297.04221	397.87220	53.95660
272	1294.69420	399.06640	53.87430
273	1292.34621	400.25850	53.79190
274	1289.99820	401.44840	53.70950
275	1287.65021	402.63620	53.62700
276	1285.30220	403.82190	53.54440

ORIGINAL PAGE IS
OF POOR QUALITY

277	1282.95430	405.00550	53.46180
278	1280.60620	406.18690	53.37900
279	1278.25830	407.36620	53.29620
280	1275.91029	408.54340	53.21340
281	1273.56230	409.71850	53.13040
282	1271.21429	410.89140	53.04740
283	1268.86630	412.06230	52.96430
284	1266.51830	413.23090	52.88120
285	1264.17030	414.39750	52.79800
286	1261.82230	415.56200	52.71470
287	1259.47430	416.72430	52.63130
288	1257.12630	417.88450	52.54790
289	1254.77831	419.04250	52.46440
290	1252.43030	420.19840	52.38080
291	1250.08231	421.35220	52.29720
292	1247.73430	422.50390	52.21350
293	1245.38651	423.65340	52.12970
294	1243.03841	424.80090	52.04590
295	1240.69040	425.94620	51.96200
296	1238.34241	427.08930	51.87800
297	1235.99440	428.23040	51.79390
298	1233.64639	429.36930	51.70980
299	1231.29840	430.50610	51.62560
300	1228.95039	431.64070	51.54130
301	1226.60240	432.77320	51.45700
302	1224.25439	433.90360	51.37260
303	1221.90640	435.03190	51.28810
304	1219.55840	436.15800	51.20360
305	1217.21040	437.28200	51.11900
306	1214.86250	438.40390	51.03430
307	1212.51460	439.52360	50.94950
308	1210.16650	440.64120	50.86470
309	1207.81850	441.75670	50.77980
310	1205.47050	442.87000	50.69480
311	1203.12250	443.98120	50.60980
312	1200.77451	445.09030	50.52470
313	1198.42650	446.19720	50.43950
314	1196.07851	447.30200	50.35420
315	1193.73050	448.40470	50.26890
316	1191.38260	449.50520	50.18350
317	1189.03461	450.60360	50.09800
318	1186.68660	451.69990	50.01250
319	1184.33859	452.79400	49.92690
320	1181.99060	453.88600	49.84120
321	1179.64259	454.97590	49.75540
322	1177.29460	456.06360	49.66960
323	1174.94659	457.14920	49.58370
324	1172.59860	458.23260	49.49770
325	1170.25060	459.31400	49.41170
326	1167.90260	460.39310	49.32550
327	1165.55460	461.47020	49.23940
328	1163.20660	462.54510	49.15310
329	1160.85870	463.61780	49.06680
330	1158.51070	464.68850	48.98040
331	1156.16270	465.75700	48.89390
332	1153.81470	466.82330	48.80740
333	1151.46671	467.88750	48.72080

ORIGINAL PAGE IS
OF POOR QUALITY

334	1149.11870	468.94960	48.63410
335	1146.77071	470.00950	48.54730
336	1144.42270	471.06730	48.46050
337	1142.07471	472.12300	48.37360
338	1139.72670	473.17650	48.28660
339	1137.37869	474.22780	48.19960
340	1135.03070	475.27710	48.11250
341	1132.68269	476.32420	48.02530
342	1130.33470	477.36910	47.93810
343	1127.98680	478.41190	47.85080
344	1125.63879	479.45260	47.76340
345	1123.29080	480.49110	47.67600
346	1120.94279	481.52750	47.58840
347	1118.59480	482.56170	47.50090
348	1116.24680	483.59380	47.41320
349	1113.89880	484.62370	47.32550
350	1111.55080	485.65150	47.23770
351	1109.20280	486.67720	47.14980
352	1106.85490	487.70070	47.06190
353	1104.50690	488.72200	46.97390
354	1102.15891	489.74130	46.88580
355	1099.81090	490.75840	46.79770
356	1097.46291	491.77330	46.70950
357	1095.11490	492.78610	46.62120
358	1092.76700	493.79670	46.53280
359	1090.41890	494.80530	46.44440
360	1088.07100	495.81160	46.35590
361	1085.72290	496.81580	46.26740
362	1083.37489	497.81790	46.17880
363	1081.02690	498.81780	46.09010
364	1078.67900	499.81560	46.00130
365	1076.33099	500.81120	45.91250
366	1073.98300	501.80470	45.82360
367	1071.63499	502.79600	45.73470
368	1069.28700	503.78520	45.64560
369	1066.93900	504.77220	45.55650
370	1064.59100	505.75710	45.46740
371	1062.24300	506.73980	45.37810
372	1059.89500	507.72040	45.28880
373	1057.54700	508.69890	45.19950
374	1055.19901	509.67520	45.11000
375	1052.85100	510.64930	45.02050
376	1050.50301	511.62130	44.93100
377	1048.15500	512.59110	44.84130
378	1045.80710	513.55880	44.75160
379	1043.45911	514.52430	44.66190
380	1041.11099	515.48770	44.57200
381	1038.76311	516.44900	44.48210
382	1036.41510	517.40810	44.39220
383	1034.06720	518.36500	44.30210
384	1031.71910	519.31980	44.21200
385	1029.37109	520.27240	44.12190
386	1027.02310	521.22290	44.03160
387	1024.67509	522.17120	43.94130
388	1022.32710	523.11740	43.85100
389	1019.97910	524.06140	43.76050
390	1017.63110	525.00330	43.67000

391	1015.28310	525.94300	43.57950
392	1012.93520	526.88050	43.48880
393	1010.58710	527.81600	43.39810
394	1008.23920	528.74920	43.30740
395	1005.89120	529.68030	43.21660
396	1003.54310	530.60930	43.12570
397	1001.19510	531.53610	43.03470
398	998.84710	532.46070	42.94370
399	996.49910	533.38320	42.85270
400	994.15110	534.30360	42.76160
401	991.80310	535.22180	42.67040
402	989.45510	536.13780	42.57910
403	987.10710	537.05170	42.48780
404	984.75910	537.96340	42.39650
405	982.41110	538.87290	42.30500
406	980.06310	539.78040	42.21360
407	977.71510	540.68560	42.12200
408	975.36710	541.58870	42.03040
409	973.01910	542.48970	41.93870
410	970.67110	543.38850	41.84700
411	968.32310	544.28510	41.75520
412	965.97510	545.17960	41.66340
413	963.62710	546.07190	41.57150
414	961.27910	546.96210	41.47950
415	958.93110	547.85010	41.38750
416	956.58310	548.73600	41.29540
417	954.23510	549.61970	41.20330
418	951.88710	550.50130	41.11110
419	949.53910	551.38070	41.01880
420	947.19110	552.25790	40.92650
421	944.84310	553.13300	40.83420
422	942.49510	554.00590	40.74170
423	940.14710	554.87670	40.64920
424	937.79910	555.74530	40.55670
425	935.45110	556.61180	40.46410
426	933.10310	557.47610	40.37140
427	930.75510	558.33820	40.27870
428	928.40710	559.19820	40.18590
429	926.05910	560.05610	40.09300
430	923.71110	560.91180	40.00010
431	921.36310	561.76530	39.90720
432	919.01510	562.61670	39.81420
433	916.66710	563.46590	39.72110
434	914.31910	564.31290	39.62800
435	911.97110	565.15780	39.53480
436	909.62310	566.00060	39.44150
437	907.27510	566.84120	39.34820
438	904.92710	567.67960	39.25490
439	902.57910	568.51580	39.16140
440	900.23110	569.35000	39.06800
441	897.88310	570.18190	38.97440
442	895.53510	571.01170	38.88080
443	893.18710	571.83930	38.78720
444	890.83910	572.66490	38.69350
445	888.49110	573.48820	38.59970
446	886.14310	574.30940	38.50590
447	883.79510	575.12840	38.41200

448	881.44710	575.94520	38.31810
449	879.09910	576.75990	38.22410
450	876.75110	577.57250	38.13000
451	874.40310	578.38290	38.03590
452	872.05510	579.19110	37.94180
453	869.70720	579.99710	37.84760
454	867.35920	580.80100	37.75330
455	865.01120	581.60280	37.65890
456	862.66320	582.40240	37.56460
457	860.31520	583.19980	37.47010
458	857.96720	583.99510	37.37560
459	855.61920	584.78820	37.28110
460	853.27120	585.57920	37.18650
461	850.92320	586.36800	37.09180
462	848.57520	587.15460	36.99710
463	846.22720	587.93910	36.90230
464	843.87920	588.72140	36.80750
465	841.53120	589.50160	36.71260
466	839.18320	590.27960	36.61760
467	836.83520	591.05540	36.52270
468	834.48720	591.82910	36.42760
469	832.13920	592.60060	36.33250
470	829.79120	593.37000	36.23730
471	827.44320	594.13720	36.14210
472	825.09520	594.90230	36.04690
473	822.74720	595.66520	35.95150
474	820.39920	596.42590	35.85620
475	818.05120	597.18450	35.76070
476	815.70320	597.94090	35.66520
477	813.35520	598.69520	35.56970
478	811.00720	599.44730	35.47410
479	808.65920	600.19720	35.37850
480	806.31120	600.94500	35.28270
481	803.96320	601.69060	35.18700
482	801.61520	602.43400	35.09120
483	799.26720	603.17530	34.99530
484	796.91920	603.91450	34.89940
485	794.57120	604.65140	34.80340
486	792.22320	605.38620	34.70740
487	789.87530	606.11890	34.61130
488	787.52720	606.84940	34.51520
489	785.17920	607.57770	34.41900
490	782.83120	608.30390	34.32280
491	780.48320	609.02790	34.22650
492	778.13520	609.74980	34.13020
493	775.78720	610.46940	34.03380
494	773.43920	611.18700	33.93730
495	771.09120	611.90230	33.84090
496	768.74320	612.61550	33.74430
497	766.39520	613.32660	33.64770
498	764.04720	614.03550	33.55110
499	761.69920	614.74220	33.45440
500	759.35120	615.44680	33.35760
501	757.00320	616.14920	33.26080
502	754.65520	616.84940	33.16400
503	752.30720	617.54750	33.06700
504	749.95920	618.24340	32.97010

505	747.61120	618.93720	32.87310
506	745.26320	619.62880	32.77600
507	742.91520	620.31820	32.67890
508	740.56720	621.00550	32.58180
509	738.21920	621.69060	32.48460
510	735.87120	622.37360	32.38730
511	733.52320	623.05440	32.29000
512	731.17520	623.73300	32.19260
513	728.82720	624.40950	32.09520
514	726.47920	625.08380	31.99780
515	724.13120	625.75590	31.90020
516	721.78320	626.42590	31.80270
517	719.43520	627.09370	31.70510
518	717.08720	627.75940	31.60740
519	714.73920	628.42290	31.50970
520	712.39120	629.08420	31.41200
521	710.04320	629.74340	31.31420
522	707.69520	630.40040	31.21630
523	705.34720	631.05530	31.11840
524	702.99920	631.70800	31.02050
525	700.65120	632.35850	30.92250
526	698.30320	633.00690	30.82440
527	695.95520	633.65310	30.72630
528	693.60720	634.29710	30.62820
529	691.25920	634.93900	30.53000
530	688.91120	635.57870	30.43170
531	686.56320	636.21620	30.33350
532	684.21520	636.85160	30.23510
533	681.86720	637.48490	30.13670
534	679.51920	638.11590	30.03830
535	677.17120	638.74480	29.93980
536	674.82320	639.37160	29.84130
537	672.47520	639.99620	29.74270
538	670.12720	640.61860	29.64410
539	667.77920	641.23880	29.54550
540	665.43120	641.85690	29.44680
541	663.08320	642.47290	29.34800
542	660.73520	643.08660	29.24920
543	658.38720	643.69820	29.15030
544	656.03920	644.30770	29.05150
545	653.69120	644.91490	28.95250
546	651.34320	645.52000	28.85350
547	648.99520	646.12300	28.75450
548	646.64720	646.72380	28.65540
549	644.29920	647.32240	28.55630
550	641.95120	647.91890	28.45710
551	639.60320	648.51320	28.35790
552	637.25520	649.10530	28.25870
553	634.90720	649.69530	28.15940
554	632.55920	650.28310	28.06000
555	630.21120	650.86870	27.96060
556	627.86320	651.45220	27.86120
557	625.51520	652.03350	27.76170
558	623.16720	652.61270	27.66220
559	620.81920	653.18970	27.56260
560	618.47120	653.76450	27.46300
561	616.12320	654.33720	27.36330

ORIGINAL PAGE IS
OF POOR QUALITY

562	613.77520	654.90770	27.26360
563	611.42720	655.47600	27.16390
564	609.07920	656.04220	27.06410
565	606.73120	656.60620	26.96430
566	604.38320	657.16800	26.86440
567	602.03520	657.72770	26.76450
568	599.68720	658.28520	26.66450
569	597.33920	658.84060	26.56450
570	594.99120	659.39380	26.46450
571	592.64320	659.94480	26.36440
572	590.29520	660.49370	26.26430
573	587.94720	661.04040	26.16410
574	585.59920	661.58490	26.06390
575	583.25120	662.12730	25.96370
576	580.90320	662.66750	25.86340
577	578.55520	663.20560	25.76300
578	576.20720	663.74150	25.66270
579	573.85920	664.27520	25.56220
580	571.51120	664.80670	25.46180
581	569.16320	665.33610	25.36130
582	566.81530	665.86330	25.26080
583	564.46730	666.38840	25.16020
584	562.11920	666.91130	25.05960
585	559.77120	667.43200	24.95890
586	557.42320	667.95060	24.85820
587	555.07520	668.46700	24.75750
588	552.72720	668.98130	24.65670
589	550.37920	669.49340	24.55590
590	548.03120	670.00330	24.45500
591	545.68320	670.51110	24.35410
592	543.33520	671.01670	24.25320
593	540.98720	671.52020	24.15220
594	538.63920	672.02140	24.05120
595	536.29110	672.52050	23.95020
596	533.94310	673.01750	23.84910
597	531.59520	673.51220	23.74800
598	529.24720	674.00480	23.64680
599	526.89920	674.49520	23.54560
600	524.55120	674.98350	23.44440
601	522.20320	675.46960	23.34310
602	519.85520	675.95360	23.24180
603	517.50720	676.43540	23.14050
604	515.15920	676.91500	23.03910
605	512.81120	677.39250	22.93770
606	510.46320	677.86770	22.83630
607	508.11520	678.34090	22.73480
608	505.76720	678.81180	22.63330
609	503.41920	679.28060	22.53170
610	501.07120	679.74730	22.43010
611	498.72320	680.21180	22.32850
612	496.37520	680.67410	22.22690
613	494.02720	681.13420	22.12520
614	491.67920	681.59220	22.02350
615	489.33120	682.04800	21.92170
616	486.98320	682.50170	21.81990
617	484.63520	682.95320	21.71810
618	482.28720	683.40250	21.61630

619	479.93920	683.84970	21.51440
620	477.59120	684.29470	21.41240
621	475.24320	684.73750	21.31050
622	472.89520	685.17820	21.20850
623	470.54720	685.61670	21.10650
624	468.19920	686.05310	21.00450
625	465.85120	686.48730	20.90240
626	463.50320	686.91930	20.80030
627	461.15520	687.34910	20.69810
628	458.80720	687.77680	20.59600
629	456.45920	688.20240	20.49380
630	454.11120	688.62580	20.39150
631	451.76310	689.04700	20.28930
632	449.41510	689.46600	20.18700
633	447.06710	689.88290	20.08460
634	444.71920	690.29760	19.98230
635	442.37120	690.71020	19.87990
636	440.02320	691.12060	19.77750
637	437.67520	691.52880	19.67510
638	435.32720	691.93490	19.57260
639	432.97920	692.33880	19.47010
640	430.63120	692.74050	19.36760
641	428.28320	693.14010	19.26500
642	425.93520	693.53750	19.16250
643	423.58720	693.93280	19.05990
644	421.23920	694.32590	18.95720
645	418.89120	694.71680	18.85460
646	416.54320	695.10560	18.75190
647	414.19520	695.49220	18.64920
648	411.84720	695.87670	18.54650
649	409.49920	696.25900	18.44370
650	407.15120	696.63910	18.34090
651	404.80320	697.01710	18.23810
652	402.45520	697.39290	18.13530
653	400.10720	697.76650	18.03240
654	397.75920	698.13800	17.92950
655	395.41120	698.50730	17.82660
656	393.06320	698.87450	17.72370
657	390.71520	699.23950	17.62070
658	388.36720	699.60230	17.51780
659	386.01920	699.96300	17.41480
660	383.67120	700.32160	17.31180
661	381.32320	700.67790	17.20870
662	378.97520	701.03210	17.10570
663	376.62720	701.38420	17.00260
664	374.27920	701.73410	16.89950
665	371.93120	702.08180	16.79640
666	369.58320	702.42730	16.69320
667	367.23520	702.77080	16.59010
668	364.88720	703.11200	16.48690
669	362.53920	703.45110	16.38370
670	360.19120	703.78800	16.28050
671	357.84320	704.12280	16.17720
672	355.49520	704.45540	16.07400
673	353.14720	704.78590	15.97070
674	350.79920	705.11420	15.86740
675	348.45120	705.44030	15.76410

ORIGINAL PAGE IS
OF POOR QUALITY

676	346.10320	705.76430	15.66080
677	343.75520	706.08610	15.55750
678	341.40720	706.40580	15.45420
679	339.05920	706.72330	15.35080
680	336.71120	707.03870	15.24740
681	334.36320	707.35190	15.14400
682	332.01520	707.66290	15.04070
683	329.66720	707.97180	14.93730
684	327.31920	708.27850	14.83380
685	324.97120	708.58310	14.73040
686	322.62320	708.88550	14.62700
687	320.27520	709.18580	14.52350
688	317.92720	709.48390	14.42010
689	315.57920	709.77990	14.31660
690	313.23120	710.07370	14.21320
691	310.88320	710.36530	14.10970
692	308.53520	710.65480	14.00620
693	306.18720	710.94210	13.90280
694	303.83920	711.22730	13.79930
695	301.49120	711.51040	13.69580
696	299.14320	711.79130	13.59230
697	296.79520	712.07000	13.48890
698	294.44720	712.34660	13.38540
699	292.09920	712.62110	13.28190
700	289.75120	712.89340	13.17850
701	287.40320	713.16350	13.07500
702	285.05520	713.43150	12.97160
703	282.70720	713.69740	12.86810
704	280.35920	713.96110	12.76470
705	278.01120	714.22260	12.66130
706	275.66320	714.48210	12.55790
707	273.31520	714.73930	12.45450
708	270.96720	714.99450	12.35110
709	268.61920	715.24750	12.24780
710	266.27120	715.49830	12.14450
711	263.92320	715.74700	12.04120
712	261.57520	715.99360	11.93790
713	259.22720	716.23800	11.83460
714	256.87920	716.48030	11.73140
715	254.53120	716.72050	11.62820
716	252.18320	716.95850	11.52510
717	249.83520	717.19440	11.42190
718	247.48720	717.42810	11.31890
719	245.13920	717.65970	11.21580
720	242.79120	717.88920	11.11280
721	240.44320	718.11660	11.00990
722	238.09520	718.34180	10.90700
723	235.74720	718.56490	10.80420
724	233.39920	718.78590	10.70150
725	231.05120	719.00470	10.59880
726	228.70320	719.22140	10.49620
727	226.35520	719.43600	10.39370
728	224.00720	719.64850	10.29130
729	221.65920	719.85890	10.18900
730	219.31120	720.06720	10.08680
731	216.96320	720.27340	9.98480
732	214.61520	720.47740	9.88290

733	212.26720	720.67940	9.78110
734	209.91920	720.87920	9.67950
735	207.57120	721.07700	9.57800
736	205.22320	721.27270	9.47680
737	202.87520	721.46620	9.37580
738	200.52720	721.65770	9.27510
739	198.17920	721.84710	9.17470
740	195.83120	722.03450	9.07460
741	193.48320	722.21980	8.97490
742	191.13520	722.40310	8.87570
743	188.78720	722.58430	8.77700
744	186.43920	722.76340	8.67900
745	184.09120	722.94060	8.58180
746	181.74320	723.11580	8.48570
747	179.39520	723.28900	8.39100
748	177.04720	723.46030	8.29830
749	174.69920	723.62970	8.20880
750	172.35120	723.79730	8.12560
751	170.00000	723.96350	8.08120

INPUT PATTERN

THETA	ET	ETP	HT	HTP
.00000	.03189	160.94854	.03189	160.94854
.50000	.02203	152.42272	.02153	150.07270
1.00000	.01531	128.92599	.01556	130.95953
1.50000	.01872	115.66938	.01867	117.82706
2.00000	.01962	128.89700	.01948	128.27452
2.50000	.02193	112.16008	.02186	110.88366
3.00000	.02173	99.98333	.02182	99.52697
3.50000	.02346	76.01975	.02338	77.12832
4.00000	.02624	59.24859	.02604	59.58780
4.50000	.02692	48.29406	.02702	47.47924
5.00000	.03074	21.73114	.03093	21.41990
5.50000	.03329	-4.89370	.03321	-4.59645
6.00000	.03876	-32.68131	.03835	-32.39106
6.50000	.04107	-59.81425	.04093	-59.98911
7.00000	.04245	-90.41803	.04279	-90.28339
7.50000	.04957	-122.88821	.04950	-122.77106
8.00000	.05512	-158.16578	.05471	-158.25670
8.50000	.06061	166.18244	.06026	165.96563
9.00000	.06369	126.09218	.06363	126.05196
9.50000	.06903	84.55063	.06865	84.81366
10.00000	.07487	44.08241	.07438	43.92854
10.50000	.07856	-.17038	.07827	-.45889
11.00000	.08276	-45.97937	.08252	-46.11575
11.50000	.08646	-95.22596	.08603	-95.27142
12.00000	.09022	-143.39368	.08943	-143.65247
12.50000	.08970	166.22498	.08932	165.91199
13.00000	.08953	113.06521	.08926	112.92883
13.50000	.08912	60.97027	.08862	60.87060
14.00000	.08889	6.77531	.08824	6.52877
14.50000	.08601	-46.66529	.08558	-47.13215
15.00000	.08395	-103.30461	.08371	-103.51268
15.50000	.08400	-160.38636	.08344	-160.51400

ORIGINAL PAGE IS OF POOR QUALITY

16.00000	.08271	142.98482	.08204	142.78723
16.50000	.08393	84.35289	.08331	83.97520
17.00000	.08289	23.86320	.08266	23.63240
17.50000	.08511	-39.66116	.08477	-39.63493
18.00000	.08727	-103.77544	.08668	-103.93805
18.50000	.08775	-169.67775	.08725	-169.85434
19.00000	.08749	123.01064	.08728	122.68715
19.50000	.08537	53.22397	.08529	53.19949
20.00000	.08631	-16.92197	.08598	-16.86076
20.50000	.08558	-87.32854	.08518	-87.49989
21.00000	.08648	-159.30704	.08604	-159.48540
21.50000	.08584	126.73097	.08587	126.50017
22.00000	.08606	49.90195	.08603	49.96838
22.50000	.08797	-27.53711	.08772	-27.49164
23.00000	.08720	-106.56032	.08688	-106.56731
23.50000	.08722	174.60870	.08693	174.44434
24.00000	.08550	93.28094	.08568	93.13406
24.50000	.08613	10.45630	.08616	10.51575
25.00000	.08754	-73.90714	.08760	-73.80573
25.50000	.08870	-160.29449	.08843	-160.13187
26.00000	.08877	113.61127	.08857	113.47836
26.50000	.08807	24.76657	.08817	24.62143
27.00000	.08717	-64.46643	.08731	-64.52237
27.50000	.08723	-156.25848	.08770	-156.23401
28.00000	.08915	110.94855	.08920	111.10590
28.50000	.08941	17.05463	.08947	17.15082
29.00000	.09050	-78.35928	.09036	-78.40649
29.50000	.08919	-173.95856	.08924	-174.11066
30.00000	.08914	87.92300	.08948	87.76913
30.50000	.08936	-10.98184	.08967	-11.09552
31.00000	.08932	-112.60153	.08988	-112.42841
31.50000	.09032	145.48944	.09052	145.58911
32.00000	.09030	42.35117	.09039	42.60123
32.50000	.09170	-61.72168	.09158	-61.56955
33.00000	.09155	-166.59274	.09139	-166.61197
33.50000	.09236	86.10925	.09226	86.13550
34.00000	.09113	-21.43704	.09108	-21.61713
34.50000	.09099	-131.09033	.09116	-131.09906
35.00000	.09145	118.57190	.09167	118.47748
35.50000	.09122	6.16992	.09151	6.22235
36.00000	.09240	-107.07135	.09268	-106.91046
36.50000	.09162	138.90405	.09189	139.04742
37.00000	.09370	23.58032	.09386	23.92651
37.50000	.09356	-92.62384	.09358	-92.32660
38.00000	.09436	149.53973	.09419	149.94189
38.50000	.09485	31.45483	.09452	31.79755
39.00000	.09451	-88.53198	.09392	-88.21899
39.50000	.09615	150.94916	.09558	151.12225
40.00000	.09540	28.90845	.09481	29.01160
40.50000	.09669	-93.92175	.09604	-93.78186
41.00000	.09642	142.51019	.09596	142.60809
41.50000	.09707	17.11401	.09627	17.39026
42.00000	.09709	-108.72717	.09628	-108.55756
42.50000	.09692	123.87378	.09596	124.03986
43.00000	.09857	-4.06342	.09766	-3.98474
43.50000	.09785	-133.44971	.09720	-133.32733
44.00000	.09888	96.59436	.09796	96.92487

44.50000	.09866	-34.21344	.09782	-33.98444
45.00000	.09919	-166.72479	.09806	-166.39612
45.50000	.09929	60.84778	.09855	60.91248
46.00000	.09918	-72.95880	.09867	-72.65631
46.50000	.09961	152.88007	.09892	153.20709
47.00000	.09886	17.80365	.09835	17.83337
47.50000	.09960	-118.15363	.09920	-118.09241
48.00000	.10005	105.93152	.09999	105.67798
48.50000	.10963	-31.72968	.10028	-31.71045
49.00000	.10244	-169.29077	.10165	-169.70520
49.50000	.10270	51.40350	.10225	51.07129
50.00000	.10457	-88.29907	.10375	-88.36206
50.50000	.10318	131.37842	.10244	131.24207
51.00000	.10352	-9.42700	.10303	-9.47424
51.50000	.10270	-149.78882	.10275	-150.00220
52.00000	.10301	69.42224	.10277	69.24744
52.50000	.10531	-72.23169	.10484	-72.82800
53.00000	.10657	144.97253	.10610	144.71899
53.50000	.10688	1.42932	.10608	1.42053
54.00000	.10616	-141.75854	.10590	-141.88977
54.50000	.10568	76.02441	.10588	75.96667
55.00000	.10797	-67.16394	.10739	-67.47693
55.50000	.11018	148.54016	.10965	148.35303
56.00000	.10907	3.62207	.10854	3.81970
56.50000	.10819	-139.82593	.10808	-139.78735
57.00000	.11025	77.17908	.11013	76.98499
57.50000	.11243	-68.05420	.11156	-67.94055
58.00000	.11141	146.77429	.11119	146.94556
58.50000	.11062	4.12842	.11056	4.29456
59.00000	.11427	-139.65833	.11359	-139.83667
59.50000	.11415	74.87634	.11355	75.24524
60.00000	.11224	-67.59729	.11198	-67.51855
60.50000	.11620	149.79626	.11546	149.73682
61.00000	.11583	4.88611	.11485	5.10860
61.50000	.11397	-136.29187	.11365	-136.25854
62.00000	.11921	81.38147	.11789	81.46191
62.50000	.11670	-61.57996	.11584	-61.31067
63.00000	.11828	159.71277	.11733	159.75476
63.50000	.12112	17.06604	.11953	17.26892
64.00000	.11791	-120.85962	.11700	-120.60608
64.50000	.12440	99.84741	.12253	99.88232
65.00000	.11906	-38.14819	.11795	-37.70239
65.50000	.12627	-173.54382	.12428	-173.58228
66.00000	.12084	49.72742	.11927	50.22400
66.50000	.12824	-82.09326	.12599	-82.15967
67.00000	.12260	143.97559	.12061	144.06167
67.50000	.13204	15.75330	.12918	15.72363
68.00000	.12353	-112.69990	.12116	-112.50508
68.50000	.13629	121.03040	.13263	121.09600
69.00000	.12825	2.25195	.12510	2.13135
69.50000	.13436	-122.55017	.13034	-122.38049
70.00000	.14307	129.19238	.13861	128.59002
70.50000	.12594	18.23340	.12271	17.93118
71.00000	.14677	-92.73792	.14045	-93.27466
71.50000	.17326	-176.91467	.16621	-178.20508
72.00000	.15617	114.93384	.15020	113.10406
72.50000	.10781	56.21558	.10473	53.85864

ORIGINAL PAGE IS
OF POOR QUALITY

73.00000	.05877	6.81006	.05733	4.62085
73.50000	.02643	-27.53625	.02585	-30.56824
74.00000	.01213	-37.61047	.01232	-41.38904
74.50000	.00926	-40.85742	.00914	-41.27710
75.00000	.00808	-61.07043	.00774	-64.68115
75.50000	.00638	-84.38354	.00670	-90.34082
76.00000	.00577	-111.61255	.00578	-113.78418
76.50000	.00521	-145.29614	.00554	-150.21655
77.00000	.00470	172.52319	.00496	176.22656
77.50000	.00419	131.83936	.00399	124.76123
78.00000	.00350	84.61243	.00391	81.76404
78.50000	.00314	40.58093	.00330	32.15662
79.00000	.00304	-14.52917	.00354	-9.76965
79.50000	.00300	-72.66162	.00301	-81.11658
80.00000	.00254	-137.93506	.00275	-137.28198
80.50000	.00234	164.08289	.00286	155.77124
81.00000	.00253	88.42578	.00249	88.86560
81.50000	.00202	11.89270	.00262	12.18738
82.00000	.00203	-58.30896	.00217	-69.09473
82.50000	.00205	-144.01917	.00213	-144.76318
83.00000	.00176	124.24695	.00246	131.08801
83.50000	.00169	42.59412	.00198	26.29785
84.00000	.00164	-52.18579	.00174	-58.12463
84.50000	.00162	-155.37427	.00185	-145.08594
85.00000	.00135	104.35986	.00200	105.53052
85.50000	.00131	8.18030	.00186	-8.05396
86.00000	.00145	-103.43530	.00171	-112.41479
86.50000	.00151	137.95422	.00142	128.51562
87.00000	.00127	12.78052	.00155	22.83630
87.50000	.00119	-106.26624	.00136	-95.36938
88.00000	.00104	129.72986	.00175	140.40637
88.50000	.00102	.56958	.00173	4.68555
89.00000	.00094	-132.99524	.00160	-133.18408
89.50000	.00075	93.13037	.00163	93.12524
90.00000	.00087	-39.26807	.00147	-49.16138

OUTPUT PATTERN

THETA	ET	ETP	HT	HTP	N	NN	BETA(N)	BETA(NN)	BETAJ
.00000	.03189	66.32640	.03189	66.15560					
.50000	.02203	66.32640	.02153	66.15560					
1.00000	.01531	66.32640	.01556	66.15560					
1.50000	.01872	66.32640	.01867	66.15560					
2.00000	.01962	66.32640	.01948	66.15560					
2.50000	.02193	66.32640	.02186	66.15560					
3.00000	.02173	66.32640	.02182	66.15560					
3.50000	.02346	66.32640	.02338	66.15560					
4.00000	.02624	66.32640	.02604	66.15560					
4.50000	.02692	66.32640	.02702	66.15560					
5.00000	.03074	66.32640	.03093	66.15560					
5.50000	.03329	66.32640	.03321	66.15560					
6.00000	.03876	66.32640	.03835	66.15560					
6.50000	.04107	66.32640	.04093	66.15560					
7.00000	.04245	66.32640	.04279	66.15560					
7.50000	.05861	66.32640	.05823	66.15560	747	748	8.39100	8.29830	8.31724

8.00000	.06247	70.67496	.06230	70.56490	742	743	8.87570	8.77700	8.80224
8.50000	.06696	72.48931	.06670	72.63117	737	738	9.37580	9.27510	9.30628
9.00000	.07275	74.88051	.07230	74.87590	732	733	9.88290	9.78110	9.81838
9.50000	.07734	76.04008	.07699	75.79604	727	728	10.39370	10.29130	10.33486
10.00000	.08153	75.68314	.08128	75.50243	722	723	10.90700	10.80420	10.85432
10.50000	.08554	73.44252	.08516	73.37449	717	718	11.42190	11.31890	11.37584
11.00000	.08946	72.34056	.08874	72.12496	712	713	11.93790	11.83460	11.89877
11.50000	.08978	70.98479	.08934	70.68017	707	708	12.45450	12.35110	12.42275
12.00000	.08955	68.09719	.08926	67.94231	702	703	12.97160	12.86810	12.94761
12.50000	.08914	67.24050	.08865	67.13885	697	698	13.48890	13.38540	13.47308
13.00000	.08890	65.88481	.08825	65.63858	692	693	14.00620	13.90280	13.99895
13.50000	.08591	66.50474	.08548	66.09094	686	687	14.62700	14.52350	14.52523
14.00000	.08396	65.54632	.08368	65.34659	681	682	15.14400	15.04070	15.05183
14.50000	.08380	65.76146	.08322	65.62284	676	677	15.66080	15.55750	15.57847
15.00000	.08297	67.54745	.08231	67.31194	671	672	16.17720	16.07400	16.10525
15.50000	.08366	68.71311	.08314	68.37423	666	667	16.69320	16.59010	16.63210
16.00000	.08360	69.06001	.08333	68.91091	661	662	17.20870	17.10570	17.15092
16.50000	.08591	68.53874	.08548	68.49483	656	657	17.72370	17.62070	17.68570
17.00000	.08747	68.44331	.08692	68.27476	651	652	18.23810	18.13530	18.21246
17.50000	.08763	68.17254	.08726	67.92570	646	647	18.75190	18.64920	18.73911
18.00000	.08637	67.39733	.08622	67.23267	640	641	19.36760	19.26500	19.26560
18.50000	.08592	66.68125	.08569	66.70682	635	636	19.87990	19.77750	19.79204
19.00000	.08585	67.26561	.08547	67.17875	630	631	20.39150	20.28930	20.31833
19.50000	.08620	68.23410	.08577	68.05792	625	626	20.90240	20.80030	20.84442
20.00000	.08600	68.77696	.08592	68.55977	620	621	21.41240	21.31050	21.37026
20.50000	.08601	68.03043	.08600	68.03502	615	616	21.92170	21.81990	21.89596
21.00000	.08767	67.57251	.08745	67.62127	610	611	22.43010	22.32850	22.42141
21.50000	.08728	67.15067	.08697	67.14927	604	605	23.03910	22.93770	22.94669
22.00000	.08722	68.29702	.08693	68.14157	599	600	23.54560	23.44440	23.47169
22.50000	.08551	68.49656	.08569	68.34955	594	595	24.05120	23.95020	23.99645
23.00000	.08619	68.54211	.08622	68.60331	589	590	24.55590	24.45500	24.52094
23.50000	.08764	68.35217	.08768	68.45911	584	585	25.05960	24.95890	25.04516
24.00000	.08871	67.77811	.08845	67.89996	578	579	25.66270	25.56220	25.56097
24.50000	.08864	68.53652	.08850	68.40135	573	574	26.16410	26.06390	26.09257
25.00000	.08786	68.32513	.08797	68.20065	568	569	26.66450	26.56450	26.61580
25.50000	.08719	68.56939	.08742	68.53577	563	564	27.16390	27.06410	27.13076
26.00000	.08785	68.02966	.08819	68.09702	558	559	27.66220	27.56260	27.66138
26.50000	.08925	67.86117	.08930	67.99605	552	553	28.25870	28.15940	28.18364
27.00000	.08986	67.79374	.08984	67.83099	547	548	28.75450	28.65540	28.70549
27.50000	.08991	68.13485	.08985	68.04002	542	543	29.24920	29.15030	29.22702
28.00000	.08917	68.53914	.08936	68.38616	536	537	29.84130	29.74270	29.74016
28.50000	.08926	68.63637	.08958	68.50412	531	532	30.33350	30.23510	30.26901
29.00000	.08934	68.11267	.08979	68.16502	526	527	30.82440	30.72630	30.78904
29.50000	.08994	67.61248	.09027	67.74013	521	522	31.31420	31.21630	31.30954
30.00000	.09031	67.55934	.09043	67.75802	515	516	31.90020	31.80270	31.82917
30.50000	.09127	67.73693	.09122	67.91874	510	511	32.38730	32.29000	32.34847
31.00000	.09159	68.39989	.09144	68.42612	505	506	32.87310	32.77600	32.86736
31.50000	.09218	68.28328	.09206	68.29914	499	500	33.45440	33.35760	33.38585
32.00000	.09137	68.66669	.09131	68.52585	494	495	33.93730	33.84090	33.90391
32.50000	.09101	68.53331	.09115	68.49770	488	489	34.51520	34.41900	34.42158
33.00000	.09140	68.67756	.09161	68.59362	483	484	34.99530	34.89940	34.93886
33.50000	.09124	68.11745	.09152	68.15688	478	479	35.47410	35.37850	35.45573
34.00000	.09233	67.82158	.09261	67.97643	472	473	36.04690	35.95150	35.97213
34.50000	.09164	67.94394	.09191	68.08773	467	468	36.52270	36.42760	36.48816
35.00000	.09370	67.91817	.09386	68.26399	461	462	37.09180	36.99710	37.00370
35.50000	.09359	68.13673	.09360	68.43791	456	457	37.56460	37.47010	37.51881
36.00000	.09439	67.90342	.09421	68.30160	451	452	38.03590	37.94180	38.03346

ORIGINAL PAGE IS
OF POOR QUALITY

36.50000	.09482	68.45622	.09446	68.79610	445	446	38.59970	38.50590	38.54773
37.00000	.09471	68.34401	.09412	68.63978	440	441	39.06800	38.97440	39.06155
37.50000	.09604	68.69952	.09546	68.86214	434	435	39.62800	39.53480	39.57488
38.00000	.09563	68.64763	.09502	68.75723	429	430	40.09300	40.00010	40.08770
38.50000	.09664	68.96692	.09602	69.09839	423	424	40.64920	40.55670	40.60018
39.00000	.09656	69.33575	.09603	69.47366	417	418	41.20330	41.11110	41.11216
39.50000	.09708	69.24344	.09627	69.49331	412	413	41.66340	41.57150	41.62369
40.00000	.09705	69.42751	.09619	69.59617	406	407	42.21360	42.12200	42.13475
40.50000	.09740	69.31138	.09646	69.45205	401	402	42.67040	42.57910	42.64536
41.00000	.09834	69.40059	.09752	69.49286	395	396	43.21660	43.12570	43.15551
41.50000	.09819	69.26362	.09745	69.45473	390	391	43.67000	43.57950	43.66510
42.00000	.09881	69.43172	.09791	69.72687	384	385	44.21200	44.12190	44.17017
42.50000	.09885	69.38340	.09791	69.64880	378	379	44.75160	44.66190	44.68259
43.00000	.09923	69.14949	.09825	69.37765	373	374	45.19950	45.11000	45.19037
43.50000	.09925	69.35303	.09860	69.51165	367	368	45.73470	45.64560	45.69749
44.00000	.09935	69.42796	.09877	69.74045	361	362	46.26740	46.17880	46.20398
44.50000	.09929	69.71958	.09868	69.92184	355	356	46.79770	46.70950	46.70981
45.00000	.09918	69.89706	.09871	69.94032	350	351	47.23770	47.14980	47.21493
45.50000	.09980	70.30500	.09955	70.22810	344	345	47.76340	47.67600	47.71941
46.00000	.10031	70.74928	.10012	70.61749	338	339	48.28660	48.19960	48.22318
46.50000	.10145	70.93750	.10090	70.76040	332	333	48.80740	48.72080	48.72636
47.00000	.10256	71.03332	.10193	70.65651	327	328	49.23940	49.15310	49.22878
47.50000	.10356	70.63650	.10294	70.42837	321	322	49.75540	49.66960	49.73045
48.00000	.10393	70.34869	.10314	70.25174	315	316	50.26890	50.18350	50.23145
48.50000	.10334	70.03260	.10271	69.93755	309	310	50.77980	50.69480	50.73170
49.00000	.10314	70.20628	.10290	70.08220	303	304	51.28810	51.20360	51.23128
49.50000	.10284	70.88009	.10276	70.68447	297	298	51.79390	51.70980	51.73015
50.00000	.10406	71.40477	.10371	71.03742	291	292	52.29720	52.21350	52.22840
50.50000	.10588	71.31524	.10541	70.87388	285	286	52.79800	52.71470	52.72602
51.00000	.10671	70.70226	.10609	70.55788	279	280	53.29620	53.21340	53.22300
51.50000	.10657	70.16571	.10600	70.10322	273	274	53.79190	53.70950	53.71927
52.00000	.10595	70.54546	.10590	70.44582	267	268	54.28510	54.20310	54.21493
52.50000	.10664	71.31968	.10652	71.15479	261	262	54.77570	54.69410	54.70989
53.00000	.10887	71.34219	.10831	71.08058	255	256	55.26370	55.18250	55.20414
53.50000	.10974	70.67577	.10921	70.64082	249	250	55.74910	55.66840	55.69776
54.00000	.10874	70.36157	.10836	70.49857	243	244	56.23190	56.15160	56.19060
54.50000	.10895	71.20039	.10883	71.15391	237	238	56.71210	56.63230	56.68280
55.00000	.11101	71.63383	.11063	71.54697	231	232	57.18970	57.11020	57.17422
55.50000	.11210	70.69911	.11143	70.83176	224	225	57.74340	57.66460	57.66491
56.00000	.11117	70.56 37	.11099	70.73705	218	219	58.21530	58.13680	58.15478
56.50000	.11167	71.75401	.11144	71.82092	212	213	58.68450	58.60650	58.64403
57.00000	.11424	71.59015	.11358	71.55677	206	207	59.15100	59.07350	59.13245
57.50000	.11369	70.79166	.11317	71.09084	199	200	59.69200	59.61490	59.62014
58.00000	.11309	71.97417	.11272	72.02334	193	194	60.15270	60.07610	60.10702
58.50000	.11613	72.37438	.11535	72.38231	187	188	60.61070	60.53460	60.59307
59.00000	.11554	71.26736	.11466	71.52771	180	181	61.14160	61.06600	61.07827
59.50000	.11462	72.677[illegible]	.11418	72.71712	174	175	61.59370	61.51850	61.56260
60.00000	.11897	72.63194	.11771	72.72977	167	168	62.11760	62.04300	62.04605
60.50000	.11679	71.81767	.11593	72.07400	161	162	62.56360	62.48950	62.52851
61.00000	.11833	74.23066	.11737	74.27586	154	155	63.08030	63.00680	63.00999
61.50000	.12106	72.30495	.11949	72.50466	148	149	63.51990	63.44680	63.49014
62.00000	.11810	74.10371	.11716	74.35412	141	142	64.02880	63.95640	63.96906
62.50000	.12371	73.96006	.12194	74.01835	135	136	64.46160	64.38970	64.44653
63.00000	.11989	73.92351	.11866	74.30568	128	129	64.96250	64.89120	64.92258
63.50000	.12478	75.09301	.12298	75.15433	121	122	65.45880	65.38820	65.39698
64.00000	.12225	74.54526	.12057	74.90230	115	116	65.88050	65.81050	65.86959
64.50000	.12588	75.81222	.12384	75.92563	108	109	66.36800	66.29870	66.34030

65.00000	.12475	75.63783	.12266	75.91272	101	102	66.85050	66.78190	66.80887
65.50000	.12779	76.36150	.12532	76.56406	94	95	67.32750	67.25970	67.27487
66.00000	.12799	77.31448	.12537	77.44873	87	88	67.79870	67.73170	67.73792
66.50000	.12857	77.10642	.12570	77.32307	80	81	68.26360	68.19750	68.19760
67.00000	.13383	78.24570	.13032	78.25477	74	75	68.65650	68.59140	68.65329
67.50000	.12952	79.97138	.12619	79.91119	67	68	69.10780	69.04390	69.10405
68.00000	.13529	76.27818	.13114	76.37273	60	61	69.55030	69.48770	69.54871
68.50000	.14360	82.23771	.13838	81.65733	52	53	70.04410	69.98310	69.98627
69.00000	.12899	82.05455	.12542	81.61842	45	46	70.46370	70.40460	70.41493
69.50000	.13971	77.37720	.13444	76.88604	38	39	70.86760	70.81110	70.83058
70.00000	.15875	79.87123	.15210	78.99366	31	32	71.24920	71.19620	71.22611
70.50000	.16997	87.54996	.16313	86.15578	24	25	71.60430	71.55560	71.59634
71.00000	.15883	94.90117	.15269	93.15606	16	17	71.95410	71.91580	71.92214
71.50000	.14106	95.66609	.13599	93.67211	9	10	72.16620	72.14370	72.15627
72.00000	.14370	100.41432	.13847	98.44920	1	2	72.06430	72.13100	72.12892
72.50000	.10781	56.21558	.10473	53.85864					
73.00000	.05877	6.81006	.05733	4.62085					
73.50000	.02643	-27.53625	.02585	-30.56824					
74.00000	.01213	-37.61047	.01232	-41.38904					
74.50000	.00926	-40.85742	.00914	-41.27710					
75.00000	.00808	-61.07043	.00774	-64.68115					
75.50000	.00638	-84.38354	.00670	-90.34082					
76.00000	.00577	-111.61255	.00578	-113.78418					
76.50000	.00521	-145.29614	.00554	-150.21655					
77.00000	.00470	172.52319	.00496	176.22656					
77.50000	.00419	131.83936	.00399	124.76123					
78.00000	.00350	84.61243	.00391	81.76404					
78.50000	.00314	40.58093	.00330	32.15662					
79.00000	.00304	-14.52917	.00354	-9.76965					
79.50000	.00300	-72.66162	.00301	-81.11658					
80.00000	.00254	-137.93506	.00275	-137.28198					
80.50000	.00234	164.08289	.00286	155.77124					
81.00000	.00253	88.42578	.00249	88.86560					
81.50000	.00202	11.89270	.00262	12.18738					
82.00000	.00203	-58.30896	.00217	-69.09473					
82.50000	.00205	-144.01917	.00213	-144.76318					
83.00000	.00176	124.24695	.00246	131.08801					
83.50000	.00169	42.59412	.00198	26.29785					
84.00000	.00164	-52.18579	.00174	-58.12463					
84.50000	.00162	-155.37427	.00185	-145.08594					
85.00000	.00135	104.35986	.00200	105.53052					
85.50000	.00131	8.18030	.00186	-8.05396					
86.00000	.00145	-103.43530	.00171	-112.41479					
86.50000	.00151	137.95422	.00142	128.51562					
87.00000	.00127	12.78052	.00155	22.83630					
87.50000	.00119	-106.26624	.00136	-95.36938					
88.00000	.00104	129.72986	.00175	140.40637					
88.50000	.00102	.56958	.00173	4.68555					
89.00000	.00094	-132.99524	.00160	-133.18408					
89.50000	.00075	93.13037	.00163	93.12524					
90.00000	.00087	-39.26807	.00147	-49.16138					

```
@BRKPT PUNCHS

@XQT 94350*FIL.EFFICIENCY
```

ORIGINAL PAGE IS OF POOR QUALITY

NASA—JPL—Coml., L.A., Calif.