NASA TECHNICAL MEMORANDUM

NASA TM-78193

(NASA-TM-78193) AN INDUCED ENVIRONMENT CONTAMINATION MONITOR FOR THE SPACE SHUTTLE (NASA) 175 p HC A08/MF A01 CSCL 22B

N78-32172

Unclas

G3/16 31550

AN INDUCED ENVIRONMENT CONTAMINATION MONITOR FOR THE SPACE SHUTTLE

Edited by Edgar R. Miller and Rudolf Decher
Space Sciences Laboratory

OCT 1978
RECEIVED
NASA STI FACILITY

August 1978

NASA

George C. Marshall Space Flight Center
Marshall Space Flight Center, Alabama

MSFC - Form 3190 (Rev June 1971)

TABLE OF CONTENTS

			Page
I.	INTRODUCTION (Edgar R. Miller)		1
II.	STS CONTAMINATION CONTROL REQUIREMENTS (Edgar R. Miller)		6
III.	IECM INSTRUMENTS (Edgar R. Miller)		13
IV.	HUMIDITY MONITOR (Henry W. Parker)	IECM01	14
V.	DEW POINT HYGROMETER (Henry W. Parker)	IECM02	20
VI.	AIR SAMPLER (Palmer N. Peters and Howard B. Hester)	IECM03	27
VII.	CASCADE IMPACTOR (Billy J. Duncan)	IECM04	46
VIII.	PASSIVE SAMPLE ARRAY (Roger C. Linton)	IECM05	58
IX.	OPTICAL EFFECTS MODULE (Roger C. Linton)	IECM06	71
X.	TEMPERATURE-CONTROLLED QUARTZ CRYSTAL MICROBALANCE (James A. Fountain)	IECM07	90
XI.	CRYOGENIC QUARTZ CRYSTAL MICROBALANCE (James A. Fountain)	IECM08	105 105
XII.	CAMERA/PHOTOMETER (Kenneth S. Clifton and Jerry K. Owens)	IECM09	118
XIII.	MASS SPECTROMETER (Rudolph C. Ruff)	IECM10	132
XIV.	IECM SYSTEMS AND THERMAL DESIGN (Marion L. Teal and Larry W. Russell)		146

PRECEDING PAGE BLANK NOT FILMED

TABLE OF CONTENTS (Concluded)

	Page
XV. PREFLIGHT AND GROUND OPERATIONS (Charles W. Davis)	161
XVI. FLIGHT OPERATION AND DATA REDUCTION (Marion L. Teal and Charles W. Davis)	163
XVII. SUMMARY (Edgar R. Miller)	167
APPENDIX — EFFECTS OF ENVIRONMENTAL EXTREMES ON FILMS	169

TECHNICAL MEMORANDUM 78193

AN INDUCED ENVIRONMENT CONTAMINATION MONITOR FOR THE SPACE SHUTTLE

I. INTRODUCTION

Edgar R. Miller

When the decision was made to develop the Space Transportation System (STS) as a universal carrier for manned space science experiments, there was much concern from the scientific community, particularly the astronomers, whether the induced particles and gases environment would place limitations on the measurement programs envisioned for the 1980's [I-1,I-2]. This concern stimulated a number of activities which include the identification of potential contamination problems, the establishment of upper limits of induced environment tolerable to experimenters, studies to assess the induced environment from current STS design, and recommended changes to achieve the desired background.

Similar concerns had been identified during the development of the Skylab program which prompted a significant research effort to develop an understanding of the various mechanisms by which experiments could be compromised and to establish the technology of contamination abatement through vehicle design and operational procedures. These efforts contributed to the successful operation of most of the Skylab and Apollo Telescope Mount (ATM) experiments. Some measurements of the molecular deposition and scattered light background were made on Skylab which confirmed that many of the precautions taken were necessary. These measurements and related laboratory work indicate there is still much to be learned concerning the interactions between the spacecraft, the induced atmosphere, and the ambient atmosphere.

As a result of concern for possible contamination from the induced environment, goals were established for control of particles and gases that would be emitted by the Space Shuttle. To assure the goals have been met, the Induced Environment Contamination Monitor (IECM) (Fig. I-1) was designed to provide verification measurements of particles and gases during ground operations, ascent, on-orbit, descent, and post-landing. These measurements are planned for all Orbiter Flight Tests (OFT's) and Spacelabs 1 and 2.

ORIGINAL PAGE IS
OF POOR QUALITY

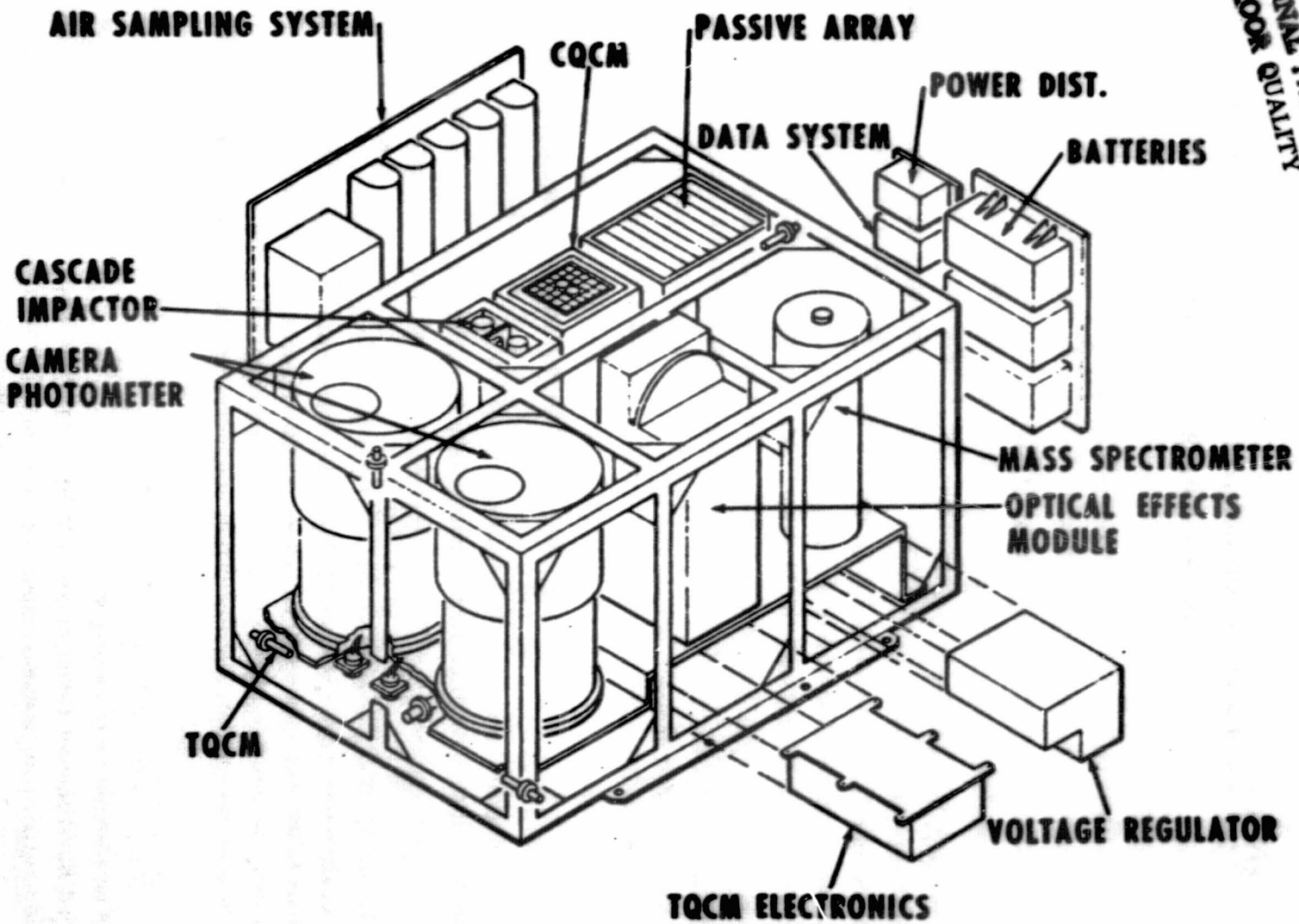

Figure I-1. Induced Environment Contamination Monitor (OFT/DFI and Spacelab VFI unit).

Spacelab 1 provides the opportunity to obtain any additional contamination from a short module-plus-pallet configuration, while Spacelab 2 is planned as a pallet-only setup.

A smaller version of the IECM will be flown on the Long Duration Exposure Facility (LDEF) satellite to obtain contamination data on deployment and retrieval as well as ground handling of large satellite payloads (Fig. I-2).

ORIGINAL PAGE IS
OF POOR QUALITY

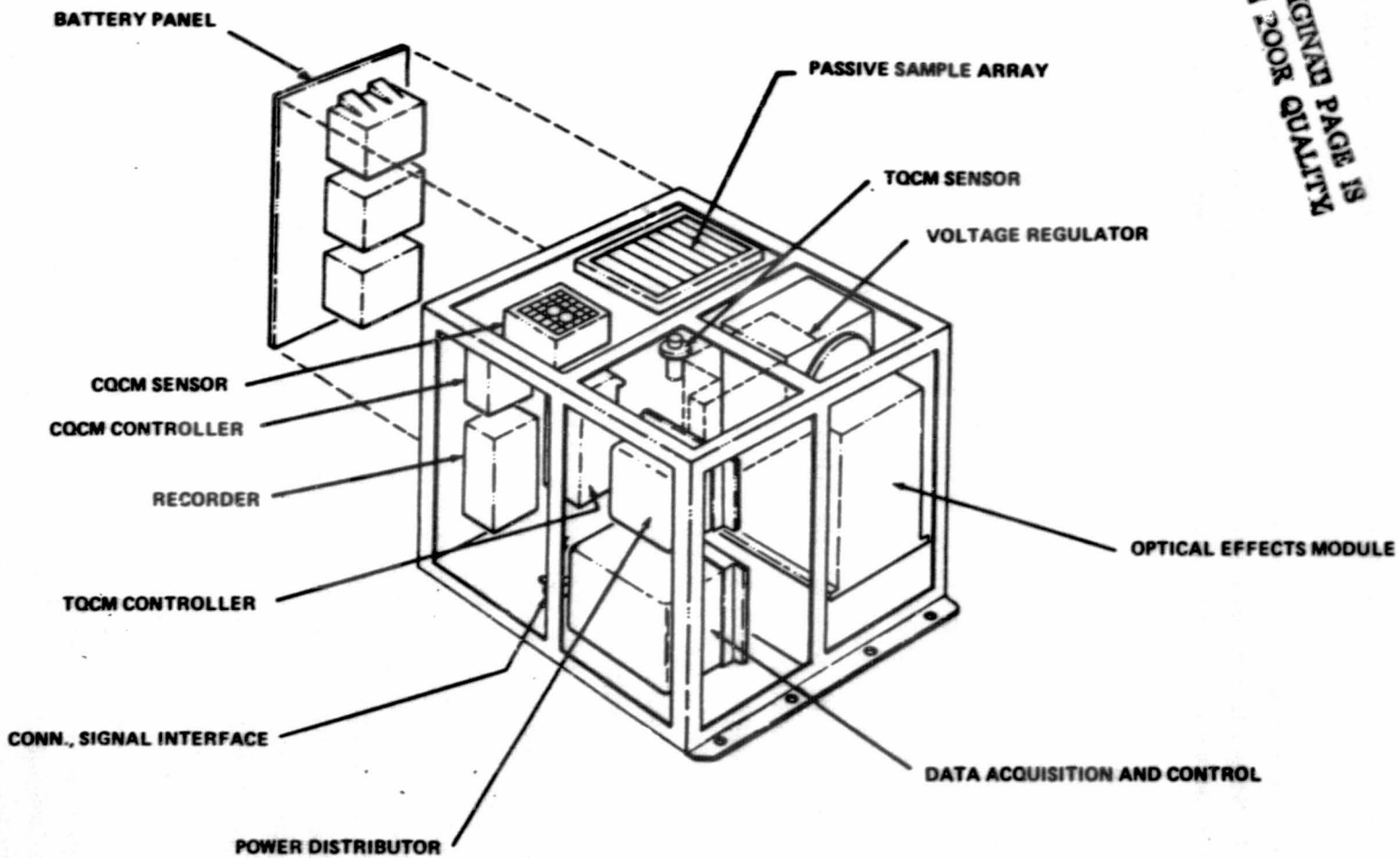

Figure I-2. Induced Environment Contamination Monitor LDEF.

REFERENCES

I-1. Anon.: Final Report of the Space Shuttle Payload Planning Working Groups, Astronomy Vol. 1. NASA/Goddard Space Flight Center, Greenbelt, Maryland, May, 1973.

I-2. Scientific Uses of the Space Shuttle. Space Science Board, National Academy of Sciences, Washington, D.C., 1974.

II. STS CONTAMINATION CONTROL REQUIREMENTS

Edgar R. Miller

Contamination control requirements were incorporated into the Space Shuttle Flight and Ground Systems Specification, Volume X [II-1] (referred to hereinafter as Volume X), by the Particles and Gases Control Panel (PGCP) as Shuttle design goals. These specifications were restated in the Payload Accommodation Document, Volume XIV [II-2].

The Contamination Requirements Definition Group (CRDG) was established with representatives from each user discipline, each NASA payload center, the Department of Defense, and the European Space Agency. The CRDG indepth study for potential payloads established net requirements for the Space Transportation System (STS) that are similar to those specified in Volume X but are more inclusive and definitive [II-3].

During orbital operations, molecules continually leave the spacecraft from leaks, vents, thruster firings, surface desorption, and material outgassing. These gases expand freely and eventually collide with the ambient atmosphere. However, their presence forms a tenuous artificial atmosphere around the spacecraft, sometimes referred to as a contamination cloud. This cloud has a molecular column density that on the average is much less than the residual ambient atmosphere at orbital altitudes. The composition, however, is such that the column densities of some species greatly exceed the natural environment. The species of most concern are H_2O, CO_2, CO, H_2, OH, and a rich variety of silicone and organic polymers. Some of these molecules are of astrophysical interest, and their presence in the induced atmosphere in detectable concentrations is undesirable. Other molecules may have absorption lines that could mask the line to be detected. Spectral resolution to be used in the astronomical observations planned around Space Shuttle will permit detection of absorption lines with 0.0001 nm equivalent line width. With this resolution, a 10^{10} molecule/cm^2 column with a strong transition in the ultraviolet will be detectable. The preceding species are detectable at 10^{11} to 10^{12} molecules/cm^2. The CRDG requirements for column density are 10^{13} molecules/cm^2 for $N_2 + O_2$, 10^{11} molecules/cm^2 for $H_2O + CO_2$, and 10^{10} molecules for all other species. Volume X requires 10^{12} H_2O/cm^2.

Another concern is the deposition of the heavier molecules, particularly the silicones, on optical surfaces. Such molecules become polymerized by the presence of energetic radiation and form a permanent brown film. A thickness of only a few monolayers ($\sim 10^{-7}$ gm/cm^2) is sufficient to begin to cause significant optical degradation in the vacuum ultraviolet, whereas a film of up to 10^{-5} gm/cm^2 is tolerable on infrared optics or on thermal control surfaces.

Most critical optical surfaces must of necessity be shadowed from any portion of the STS by light baffles. Such baffles provide excellent protection against direct line-of-sight transport of molecules leaving an outgassing surface that might otherwise deposit on the critical surface. Some molecules can arrive at a surface protected in this manner by making one or more collisions with other molecules in the contamination cloud or by colliding with an ambient atmospheric molecule. For the expected number densities associated with the STS, collisions with atmospheric molecules will be the dominant return mechanism. For surfaces at ambient temperature (~ 300 K), the CRDG requirement specifies that no more than 10^{-5} gm/cm^2 of material shall deposit during a 30 day mission on an unprotected surface (2π sr acceptance) and no more than 10^{-7} gm/cm^2 shall deposit on a surface with 0.1 sr acceptance angle during a 30 day mission. A layer of 10^{-7} gm/cm^2 should produce less than 1 percent degradation for the expected contaminants over most wavelengths from the far ultraviolet to the far infrared. For cryogenic surfaces, there is an additional concern stemming from the large amounts of H_2O in the induced environment which will condense at cryogenic temperatures. The CRDG requirement specifies that such a surface with a 0.1 sr acceptance angle shall accumulate no more than 10^{-5} gm/cm^2 in a 30 day mission. Volume X expresses this requirement in terms of a limit of 10^{-12} molecules/cm^2/s backscatter flux. This flux would result in a total molecular deposition of 4.1×10^{-6} gm/cm^2 after 30 days, assuming a unity sticking fraction.

The presence of particulate matter in the vicinity of the spacecraft has been observed on all manned space missions. Also, many unmanned spacecraft have observed "false stars" which turned out to be particles that came from the spacecraft. The concern from the potential scientific users is twofold: the occasional large particle that moves through the field-of-view and produces an unwanted signal, and the possible production of a cloud of extremely fine particles that scatter sunlight and increase the background brightness.

Infrared astronomy is the discipline most troubled by the sporadic particles. The 1.5 m cryogenic infrared telescope can detect the blackbody radiation from a slow-moving 5 μ particle at a distance of several kilometers. An occasional particle can be identified and removed from the data, but the process is time consuming and results in a partial data loss. If such occurrences were frequent, the data loss could become significant. The CRDG criterion calls for fewer than one such particle entering a 1.5×10^{-5} sr field-of-view per orbit.

The CRDG requirement limiting the production of unresolved particles is based on the rationale that the background brightness from scattered light should be no more than 10 percent of the natural sky background from 155 to 1000 nm. The natural background was measured in the ultraviolet through the visible by Witt and Lillie and is approximately equivalent to 10^{-13} $B_{\odot}$ in the ultraviolet and 6×10^{-14} $B_{\odot}$ in the visible. Therefore, the required background brightness is 10^{-14} $B_{\odot}$ in the ultraviolet and 6×10^{-15} $B_{\odot}$ in the visible. Volume X states this as "a 20th magnitude star per square arc second in the ultraviolet region." This is equivalent to 10^{-12} $B_{\odot}$.

To limit the number of particles carried into orbit from ground operations, cleanliness precautions are exercised during ground activities in the form of HEPA filtered purge gas and controlled work discipline. Volume X requires that payload surfaces be kept visibly clean during this operation. The CRDG requested an additional requirement for better than a 100K environment at all times and control of purge gas to produce no more than 10^{-6} gm/cm^2 nonvolatile residue (NVR) on the surfaces. The preceding contamination control requirements are summarized in Table II-1. An excellent summary review of Space Shuttle induced contamination concerns, as well as specific effects of this environment on a sensitive infrared telescope, has been given by Simpson and Witteborn [II-4]. Leger, et al. have discussed Space Shuttle contamination analysis and control [II-5].

TABLE II-1. SUMMARY OF CONTAMINATION SPECIFICATIONS AND MEASUREMENTS REQUIREMENTS, PRELAUNCH THROUGH ASCENT

Contamination Specifications	Specific References	Measurement Required
Air Temperature: 70 + 5°F	A, B	Temperature and Humidity
Humidity: 30 to 50%	A, B	Temperature and Humidity
Purge Gas Class 100, Guaranteed Class 5000, <15 ppm Hydrocarbons	A, B	— Trace Gas Analysis — Aerosol Count and Size — Distribution
Purge Gas Produce $<10^{-6}$ gm/cm^2 Condensibles on Surfaces	B	NVR Deposition
Control Work Discipline to Maintain Surface Cleanliness at Level 300 A (Visibly Clean with $<10^{-6}$ gm/cm^2 NVR)	A, B	— Aerosol Count and Size — Distribution — Dust Fall Measurements — NVR Deposition
Maintain Particle Count <100K in Vicinity of Payload	B	— Aerosol Count and Size — Distribution

References: A. JSC 07700, Vol. X, Paragraphs 3.6.12.2.4.1-5.
B. CRDG Requirements Document, Paragraphs 4.1.2-10.

TABLE II-1. (Continued)

Contamination Specifications	Specific References	Measurement Required
Molecular Column Density Less Than:		
— 10^{12} H_2O/cm^2	A	Molecular Column Density
— 10^{11} $H_2O + CO_2/cm^2$	B	
— 10^{13} $N_2 + O_2/cm^2$	B	
— 10^{10} Other molecules/cm^2		
Scattered/Emission Light Background Less Than:		
— $m_u = 20$ Star/s^2 (10^{-12} $B_\odot$ in ultraviolet)	A	Background Spectral Intensity
— $10^{-14.2}$ $B_\odot$ in Visible	B	
— $10^{-14.0}$ $B_\odot$ in Ultraviolet	B	
— 10^{-11} W/m^2/sr/nm $\lambda < 30\ \mu$	B	
— 10^{-10} W/m^2/sr^1/nm $\lambda > 30\ \mu$	B	
Fewer Than One 5 μ Particle per Orbit in 1.5×10^{-5} sr Field-of-View	A, B	Particle Size and Velocity Distribution

References: A. JSC 07700, Vol. X, Paragraph 3.6.12.2.4.6.
B. CRDG Requirements Document, Paragraph 4.2.

TABLE II-1. (Concluded)

Contamination Specifications	Specific References	Measurement Required
Molecular Return Flux Such That:		
— $H_2O < 10^{12}$ molecules/cm^2/s	A	— Molecular Return Flux
— Deposition 10^{-7} gm/cm^2/30 days 0.2 sr on 300 K Surface	B	— Molecular Deposition on an Ambient Surface
— Deposition 10^{-5} gm/cm^2/30 days 2π sr on 300 K Surface	B	— Molecular Deposition on an Ambient Surface
— Deposition 10^{-5} gm/cm^2/30 days 0.1 sr on 20 K Surface	B	— Molecular Deposition on a Cryogenic Surface
— Degradation of Optics 1%	A	— Degradation of Optical Surfaces

References: A. JSC 07700, Vol. X, Paragraph 3.6.12.2.4.6.
B. CRDG Requirements Document, Paragraph 4.2.

REFERENCES

II-1. Space Shuttle Program Level II Program Definition and Requirements. NASA/JSC-07700 Flight and Ground Systems Specification, Volume X, Revision B, August, 1975.

II-2. Space Shuttle Program Level II Program Definition and Requirements. NASA/FSC-07700, Volume XIV, Revision E, July, 1977.

II-3. Payload Contamination Control Requirements for Shuttle Transportation System (STS) Induced Environment. STS Payload Contamination Requirements Definition Group Report, NASA/Marshall Space Flight Center, Alabama, July, 1975.

II-4. Simpson, J. P., and Witteborn, F. C.: Effect of the Shuttle Contaminant Environment on a Sensitive Infrared Telescope. Applied Optics 16, No. 8, 1977, pp. 2051-2073.

II-5. Leger, L., Jacobs, S., and Ehlers, H. K. F.: Space Shuttle Contamination Overview. Proceedings, Institute of Environmental Sciences, February, 1978.

III. IECM INSTRUMENTS

Edgar R. Miller

For the Demonstration Flight Instrumentation (DFI) on the Space Shuttle Orbital Flight Tests (OFT's) and the Verification Flight Instrumentation (VFI) on Spacelabs 1 and 2, the IECM will consist of ten instruments: (1) Humidity Monitor, (2) Dew Point Hygrometer, (3) Air Sampler, (4) Cascade Impactor, (5) Passive Sample Array, (6) Optical Effects Module, (7) Temperature-Controlled Quartz Crystal Microbalance (TQCM), (8) Cryogenic Quartz Crystal Microbalance (CQCM), (9) Camera/Photometer, and (10) Mass Spectrometer.

For operation with the Remote Manipulating System (RMS), the Induced Environment Contamination Monitor (IECM) will be mounted on a Release Mechanism (REM) (see Appendix) and will utilize an additional instrument (Plume Pressure Gauge) to map Vernier Rocket Control System (VRCS) engine plume characteristics.

The IECM for the Long Duration Exposure Facility (LDEF) comprises the Optical Effects Module, Passive Sample Array, TQCM, and CQCM to determine contamination levels and effects during off-line buildup of a satellite, in the Shuttle bay environment, and during satellite deployment.

Sections IV through XIII present a detailed discussion of each instrument, including objectives, description, performance, data and data analysis, and operations. A quick-reference specification summary for each instrument is given at the end of each section.

IV. HUMIDITY MONITOR (IECM01)

Henry W. Parker

A. Objective

Humidity measurements will be made while the vehicle is in the Earth's atmosphere to produce a humidity/temperature profile of the environment within the cargo bay of the Shuttle. The Humidity Monitor will measure the relative humidity from 0 to 100 percent with an accuracy of ±4 percent over a temperature range of 0 to 70°C. The temperature measurement (0 to 100°C) will be made by a thermistor located within the humidity sensor mounting.

B. Instrument Description

The monitor is an off-the-shelf version of the Model 2000 built by Thunder Scientific Corporation, Albuquerque, New Mexico. Minor modifications were required for use on the Induced Environment Contamination Monitor (IECM).

The sensing element of the Humidity Monitor is a Brady array which uses a bulk detector developed by Thunder Scientific Corporation. According to the manufacturer, it responds to the presence of H_2O molecules in a specially prepared crystalline lattice with interstitial spaces through which these molecules can drift freely. The lattice structure of the array vibrates at a frequency which is a submultiple of that of the water molecule. As additional water molecules intercept and penetrate the interstitial spaces of the array, bonds are distorted, causing energy to be released to the free electrons within the structure. The structure then conducts, decreasing in resistivity as more electrons enter. No molecular bonds are broken. However, they are under extreme stress and tend to act much as would a series of stretched rubber bands. Therefore, when the array is abruptly moved from an environment of high moisture content to one of lower moisture content, the array reacts immediately (almost explosively) as the bonds, under extreme stress at a higher humidity level, return to a new or original position. The water molecules within the interstitial spaces are literally thrown out of the structure, resulting in response times of

better than 250 ms to the lower value of relative humidity or moisture level. The Brady array can be exposed to extreme temperatures and vacuum environment without impairing its ability to sense water. There are no known interferences that are sensed as H_2O, and it appears to be resistant to all major contaminants.

A thermistor is contained in the array to provide temperature data.

The instrument can sense a 0.1 percent change in humidity, but hysteresis and thermal compensation limit the overall accuracy to ±4 percent over the entire temperature range.

The monitor consists of an oscillator, detector, and linearizer electronics. The detector acts as a coupling device between the oscillator and electronics (Fig. IV-1). The temperature measurement uses a thermistor and linear electronics to give a measurement from 0°C (0 V) to 100°C (5 V).

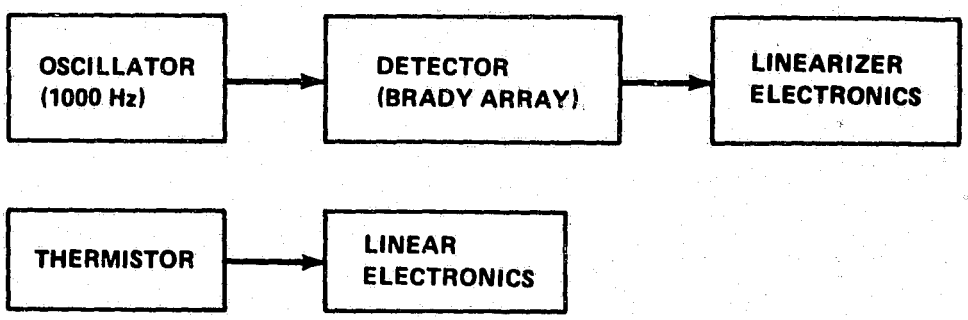

Figure IV-1. Humidity Monitor block diagram.

The sensor is mounted in the manifold of the Air Sampler, and the air flow is provided by a pump supplying air flow for the continuous sampler. The sensor is mounted at a convenient position to sample the input air to the air pump. The electronic controller is mounted at a convenient location within the Air Sampler.

The sensor will be separated from the control unit. The electronics control unit, sensor, and mount will weigh approximately 1.68 kg, and the size of the electronics is 9.4 × 13.2 × 4.06 cm. The sensor is inside a T0-5 transistor can and mounted within the Air Sampler manifold. The response curve shown in Figure IV-2 is for a standard sensor with no attempt made to select a near-linear device and without associated signal conditioning (unconditioned calibration). Careful tailoring of the manufacturing process yields sensors

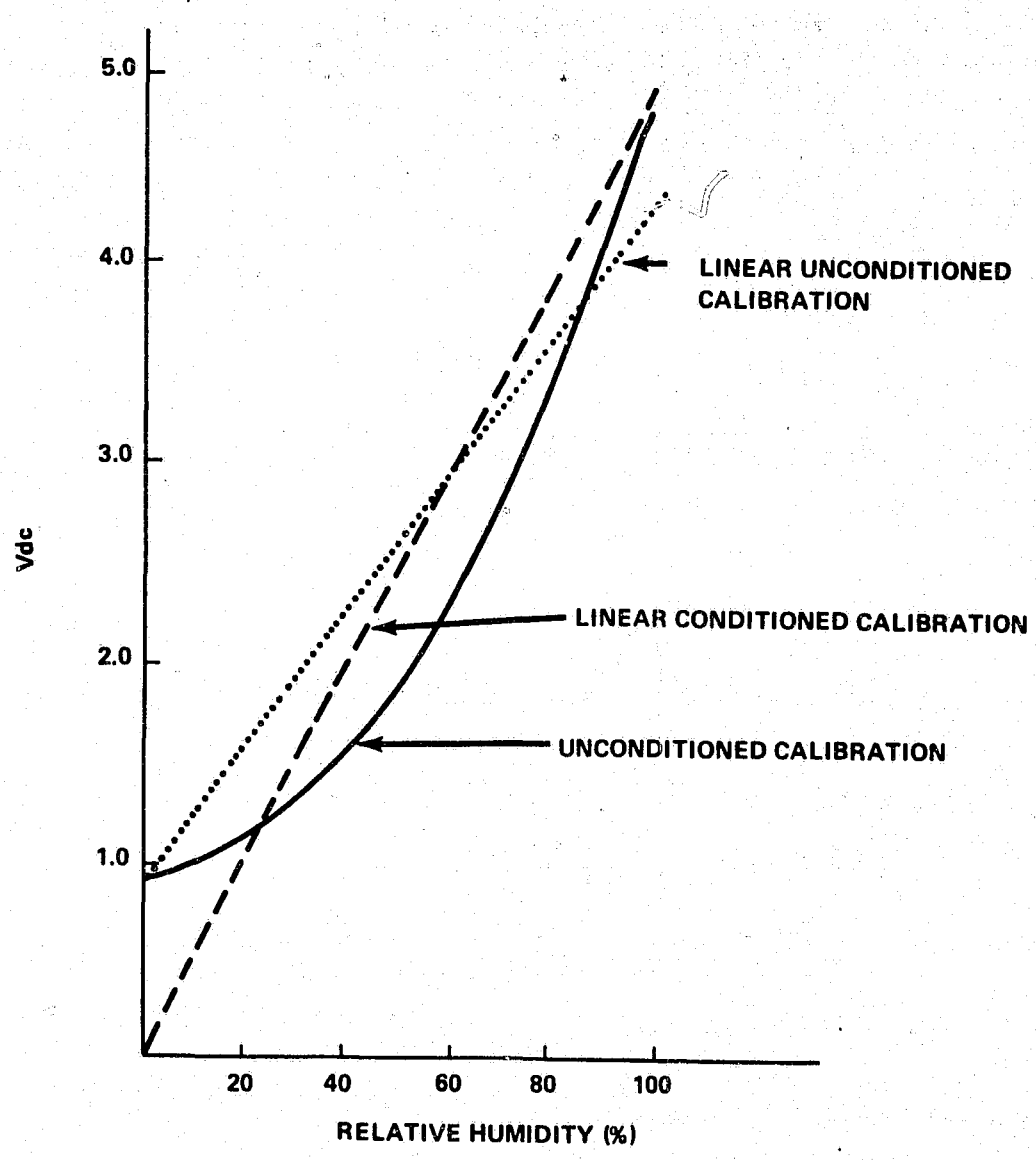

Figure IV-2. Typical response curve for a standard sensor.

with a typical, linear unconditioned curve as shown. Incorporation of a signal-conditioning module with zero offset results in a response curve with good linearity, beginning at zero for zero moisture (or relative humidity) and extending to 5 Vdc output for 100 percent relative humidity.

The input will be 28 Vdc into a dc-to-dc converter. The power requirement for the system is approximately 4 W.

The humidity will be measured over a temperature range of 0 to 70°C. The system has a storage temperature of -55 to 125°C.

All calibration is done by Thunder Scientific Corporation. The linearization of the amplifier system is performed for a range of temperature conditions from 0 to 50°C. Calibration verification will be performed prior to each flight.

C. Performance

The accuracy of the Brady array typically is better than ±4 percent indicated relative humidity over a range of 0 to 100 percent relative humidity. The worst case hysteresis, under the most extreme temperature, humidity, and time exposure approaching a reading from above, below, or randomly, is ±4 percent indicated relative humidity.

The Brady array has been tested over temperature extremes ranging from -200 to 425°C without destruction of the sensor. Although at these extremes it is not known exactly what humidity conditions the array experiences, it has been determined that at both extremes the array continues to operate and recovers quickly when removed to ambient temperature.

The array has also been exposed to altitudes ranging from sea level to 150 km (500 000 ft) and to a vacuum of 10^{-4} N/m^2 (1×10^{-6} torr). In all instances, whether exposed for hours or days to these conditions, the array began to indicate moisture immediately when metered amounts of ambient atmosphere were admitted to the vacuum. Other sensors require considerable time to respond once desiccated by vacuum to this degree. Pressure tests with very dry nitrogen (up to 65 psi) indicate that the array does not exhibit pressure sensitivity. Based on the construction characteristics of the array, it may be assumed that much higher pressure could be tolerated without damage. The Brady array is not flow sensitive and may, if required, be operated without any mechanical ventilation or, in still environments, with the same equivalent accuracies.

Response characteristics of the Brady array can be modified through manufacturing processes and methods of signal conditioning to enhance sensitivity and linearity.

D. Data

One data channel will be required for the relative humidity measurement. The output will be 0 to 5 Vdc, with 0 Vdc representing 0 percent humidity and 5 Vdc representing 100 percent relative humidity. The IECM data system will store the data to a resolution better than 0.5 percent.

One data channel will be required for temperature data. The temperature data will be 0 to 5 Vdc, with 0 Vdc representing 0°C and 5 Vdc representing 100°C. The IECM data system will store the data to a resolution of better than 0.5 percent.

A computer will be required to read the data from storage and transcribe it as a graph of humidity versus time and temperature versus time.

E. Operation

The Humidity Monitor will operate in a continuous mode from prelaunch through launch and as long as the vehicle is in the Earth's atmosphere. It will be in a standby mode (no power) while the Shuttle is in orbit. The unit will be again in the operation mode during reentry and landing. Data will be recorded during the transport of the Shuttle from California to Florida. The unit should have a warmup time of 10 min for best accuracy. Prior to each flight, the sensor will be cleaned, and a calibration check will be performed.

F. Command Requirements

Power shall be removed from the instrument after the Shuttle leaves the Earth's atmosphere and reapplied at least 10 min before the Shuttle reenters the Earth's atmosphere.

INSTRUMENT SPECIFICATION SUMMARY
HUMIDITY MONITOR

Physical Characteristics:

Weight —
Sensor —
Electronics — 1.68 kg

Total 1.68 kg

Dimensions —
Sensor — 1 cm diameter × 1 cm
Electronics — 13.2 × 9.4 × 4.06 cm

Power Requirements: 4 W

Performance Data:

Data output — 0 to 5 Vdc
Sample rates — 6/min
Resolution — ±0.5%
Accuracy — ±4%; typical ±2% over range of 0 to 70°C

V. DEW POINT HYGROMETER (IECM02)

Henry W. Parker

A. Objective

The Dew Point Hygrometer will measure the dew point of the air surrounding the Induced Environment Contamination Monitor (IECM). The measurements will be made prior to launch and as long as the vehicle is within the Earth's atmosphere, including ascent, reentry, and landing.

B. Instrument Description

The Dew Point Hygrometer was built by EG&C, Inc., for the Skylab program. The units on the IECM are retrofit from the Skylab program. The Dew Point Hygrometer is located as part of the Air Sampler system; the sensor is located within the air manifold of the Air Sampler.

The functional block diagram for the Dew Point Hygrometer system is shown in Figure V-1. The sensor unit shown in the diagram contains a mirror surface which is thermally bonded to a small thermoelectric cooling module. The module, when excited with direct current of proper polarity, causes heat to be pumped from the mirror and thus lowers the temperature of the mirror surface. As the mirror temperature reaches the dew point, the process of condensate formation on the mirror surface commences. The presence of the condensate on the mirror surface causes the mirror's characteristic light reflection to change. The mirror surface is illuminated by an incandescent source in such a fashion that the change in reflectivity is detected by the direct and bias photocells which develop a difference voltage that unbalances the photoelectric bridge. The change in voltage is applied to the input of the operational amplifier, which in turn controls the direct current supplied to the thermoelectric cooling module in direct proportion to the input signal. Using this proportional direct current to excite the cooler, causing the mirror to become cooler when a decrease in condensate occurs, the system will stabilize and control about a particular dew layer thickness. A thermistor connected in a bridge network provides a voltage through an amplifier that represents the temperature of the mirror, which is at the dew point temperature.

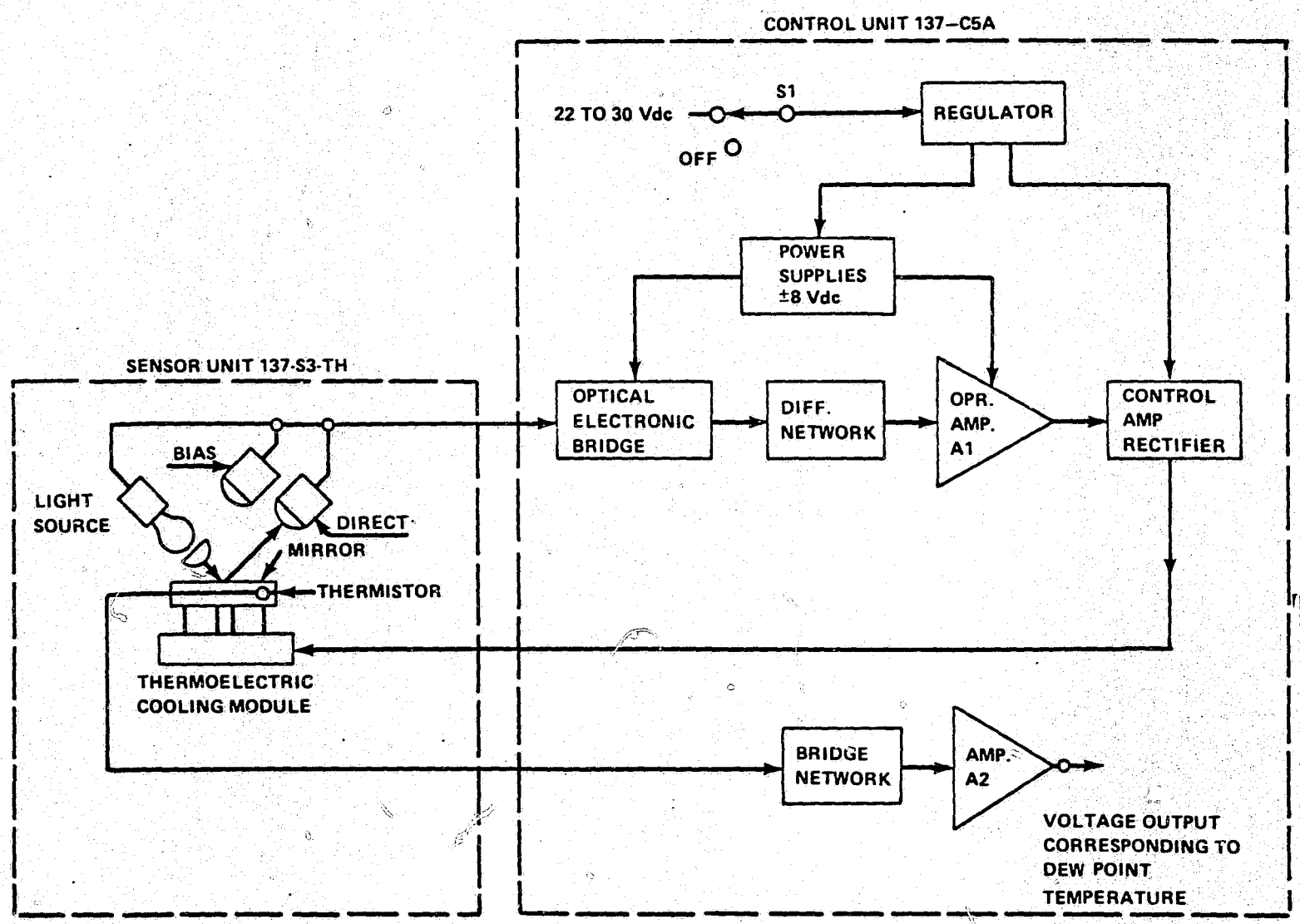

ORIGINAL PAGE IS OF POOR QUALITY

Figure V-1. Dew Point Hygrometer system, function block diagram.

The sensor, weighing 0.14 kg (8 oz), will be separated from the electronic control unit. The electronic control unit weighs 1.7010 kg (3 lb 12 oz). See Figures V-2 and V-3 for the physical dimensions.

The sensor is mounted in the manifold of the Air Sampler system. The air flow will be provided by a pump supplying air flow for the continuous Air Sampler. The sensor is mounted at a convenient position to sample the input air to the air pump. The electronic controller is mounted to the frame of the Air Sampler.

The hygrometer will operate on 27.5 Vdc nominal in the 22 to 30 Vdc range. The power consumption is 5.5 W maximum steady-state power at 23.9°C (45°F). Power for maximum cooling at 5 percent relative humidity is 9.5 W.

C. Performance

Measurements will be made over a temperature range of -6.7°C (20°F) to 26.7°C (80°F) with an accuracy of 0.5°C. The time for a 63 percent response to a 11.7°C (20°F) step change in dew point temperature is nominally 10 s. The instrument is designed and calibrated for an operating temperature range (dew point) of -6.66°C (20°F) to 26.66°C (80°F) with a nonoperating temperature of -28.0°C (-20°F) to 70.1°C (160°F). The unit case is black anodized. The design requires no cold plate for temperature control.

D. Data

The output data will require a channel with a 0 V to +5 Vdc signal, with 0 V representing a dew point of -6.7°C (20°F) and +5 Vdc representing a dew point of 26.7°C (80°F). The data system will store the data with an accuracy of better than 0.5 percent. A second data channel will be 0 to 5 V, representing the balance condition within the instrument.

A computer will be required to read the data from storage and transcribe it as a graph of dew point and humidity versus time and temperature versus time.

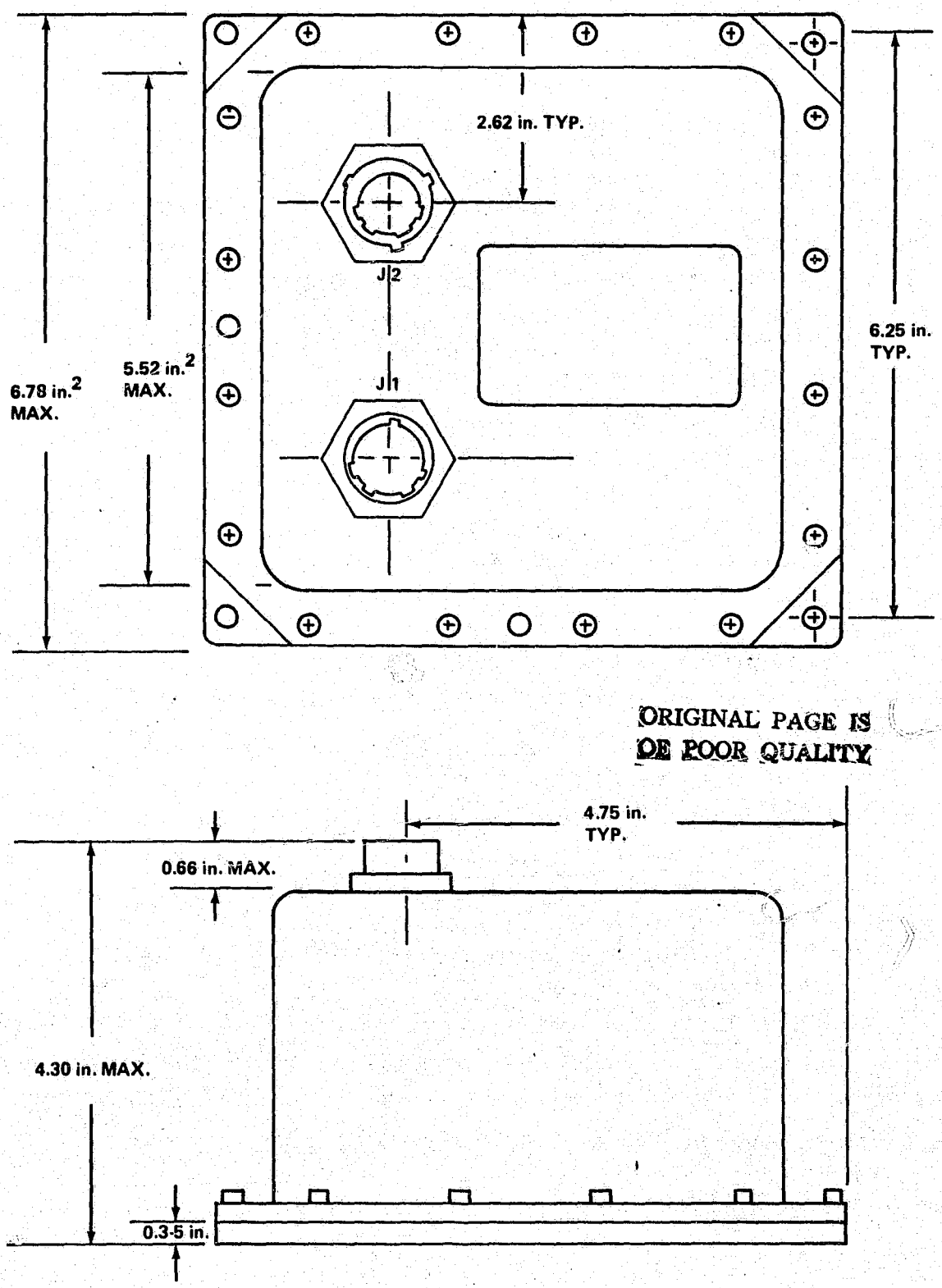

ORIGINAL PAGE IS OF POOR QUALITY

Figure V-2. Dew Point Hygrometer.

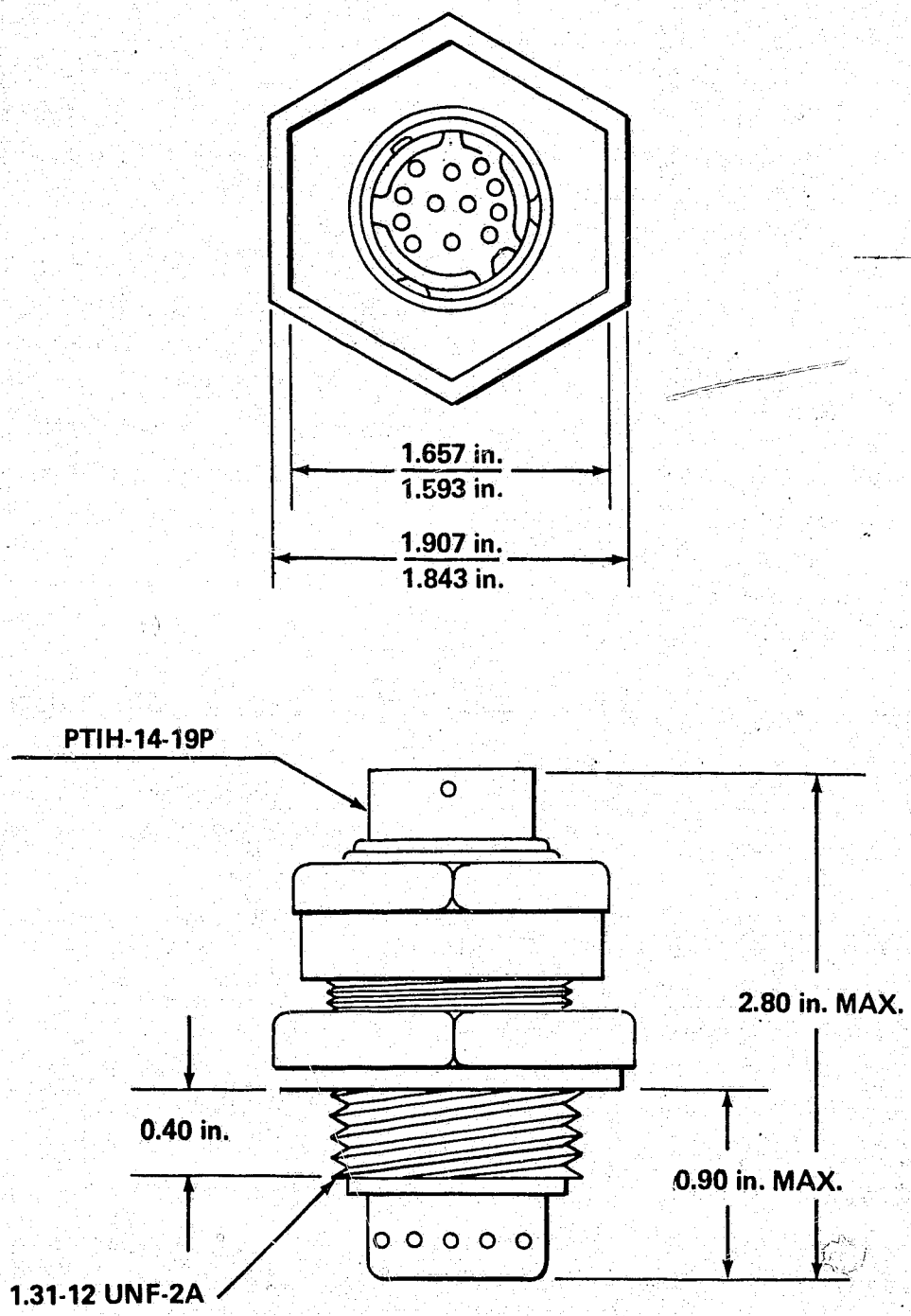

Figure V-3. Dew Point Hygrometer sensor.

E. Operation

The Dew Point Hygrometer will operate in a continuous mode from prelaunch through launch as long as the vehicle is in the Earth's atmosphere and will be in a standby mode (no power) while the Shuttle is in orbit. The unit will be in the operation mode prior to reentry, and data will be recorded during reentry and landing. The unit should have a warmup time of 10 min. Power shall be removed from the instrument after the Shuttle leaves the Earth's atmosphere and reapplied at least 10 min before the Shuttle reenters the Earth's atmosphere.

The Dew Point Hygrometer will need a verification of calibration prior to each flight. The sensor head will also require cleaning, and a humidity calibration facility will be required.

INSTRUMENT SPECIFICATION SUMMARY
DEW POINT HYGROMETER

Physical Characteristics:

Weight —

Sensor —	0.14 kg
Electronics —	1.70 kg
Total	1.84 kg

Dimensions —

Sensor — 7.21 × 4.1 × 4.1 cm

Electronics — 17.22 × 17.22 × 10.9 cm

Power Requirements:

Normal operating mode — 5.5 W

Maximum (transient) Mode — 9 W

Performance Data:

Data output — 0 to 5 Vdc

Sample rates — 1/min

Resolution — ±0.5%

Accuracy — 1% over range of -6.7 to 26.7°C

VI. AIR SAMPLER (IECM03)

Palmer N. Peters and Howard B. Hester

A. Objective

The objective of the Air Sampler is to determine the gaseous contaminants in the cargo bay area of the Space Shuttle during orbital missions. Basically, the requirements can be categorized into three groups: (1) ground-based, (2) ascent, and (3) descent sampling phases. During the ground-based sampling, the presence of organic and silicone polymers such as hydraulic fluids, phthlate esters, lubricants, methyl silicones, siloxanes, etc., is of most concern. During ascent the primary interest is in HCl from the Solid Rocket Booster (SRB) plume as well as hydrocarbons and silicones. During descent the gaseous sources of greatest concern are expected to be nitrogen compounds such as NH_3, NO_x, and HNO_x, resulting from reentry effects on the adhesives for the Thermal Protective System (TPS); hydrocarbons and silicones can also be sampled during descent.

The main emphasis will be on obtaining both qualitative and quantitative analyses of a broad range of polymers and of the specific reactive species described. The results of these analyses will be combined with other Induced Environment Contamination Monitor (IECM) data to model the environment of the cargo bay area during various stages of flight.

B. Instrument Description

The Air Sampler is a new development using available techniques and components as much as possible. The instrument is being designed and built by Spacecraft, Inc., Huntsville, Alabama.

1. Sampling Concepts and Constraints. As originally envisioned, the Air Sampler was to use many evacuated bottles which would momentarily open on command to capture gas samples as a function of time (grab sampler). After prototype grab sampler bottles had been studied, it was determined that such a system was too complex and too expensive to be flown. While the temporal information of the grab sampler can have high resolution and the evacuated bottle has advantages for use at high altitudes, the excessive volume required,

the large number of valves and commands needed, the valve design problems, and the high cost resulted in elimination of most of the grab sampler bottles. The final design utilizes five bottles, with only one evacuated grab sampler being retained for use at high altitudes. The remainder of the sample bottles use pump-assisted throughput to obtain integrated samples over the important phases of the flight with appropriate valving for each type of sampling task. Integrated sampling is justified on the basis that degradation of optics and other sensitive surfaces also depends on integrated effects and that the integration period can be adjusted between flights by changes in valve commands.

The sampling and retention of condensibles during ascent presents a number of problems because of the rapid depressurization. While the depressurization could lead to increased concentrations of evaporated species, the throughput of gases carrying the contaminants decreases until at some point no further collection is possible; unless a high-integrity seal is closed at this point, retention of the sample, especially in the high vacuum in orbit, will be in doubt. As will be shown later, estimates of this crossover point have been determined, and high-integrity seals have been chosen for the collection of condensibles during ascent. In addition, since only brief sampling periods are involved (1 min), it will be difficult to collect and subsequently measure very low concentrations of the condensibles. Species with the lowest concentrations need to be concentrated by adsorption on a limited area represented by a small amount of adsorber, so that subsequent thermal desorption in the analysis phase is optimized. However, an insufficient quantity of adsorber may saturate with a species of high concentration and displace lighter, more volatile species, producing erroneous results. Thus, the specific retention volume (discussed later) and other parameters must be controlled with the primary intent of the measurement in mind. Knowledge gained from earlier flights may dictate changes for the measurement parameters on later flights.

The ground sampling and descent sampling of condensibles is an easier problem and can be solved using more conventional sampling techniques; problems are limited access for changing bottles and the possiblity of excessive temperature fluctuations affecting accuracies of the calibrations.

Sampling of the reactive species during ascent is subject to the same depressurization problem as the condensibles; however, once the species has reacted with the collecting surface, there will be no retention problems. Since high-integrity seals are not required in this case, a wider choice of valves is available, permitting a solenoid-operated valve to be used. Near the SRB staging the pressure is so low that a grab sampling technique is used after staging to collect reactive species following this unique event. To retain a high vacuum in

the grab sample bottle for periods of weeks or months before launch, it is necessary to use a high-integrity seal; a normally closed pyrotechnic valve was chosen for this application.

Retention of reacted species is not a problem; however, the choice of specific surfaces, their preparation, and the final analyses of the reacted surfaces presented several problems. Most reactions for analysis of HCl and the nitrogen compounds rely on the presence of water; since water vapor is a constituent being measured by the IECM, and since there is no guarantee that sufficient water will be present for completion of the reactions, alternative reactions have been examined. The reaction of HCl and Ag_2O does not require a water base and was chosen for this species. Because the nitrogen compounds can be analyzed by nonwater-based reactions with ruthenium chloride and ruthenium carbonyl, these materials were chosen. Because of the requirement to have a highly reliable, stable, and reproducible technique for producing the active surface, the original idea to use coated quartz wool was abandoned. (Finding satisfactory coating procedures, concern over release of fine particles, and calibration difficulties were factors in the decision.) The use of strongly adherent thin film coatings on sturdy substrates solves most of the aforementioned problems, and the use of photoelectron analysis enables sufficient sensitivities and the ability to identify chemical species; however, the reduction in surface area by the use of thinly coated, flat substrates requires a greater effort to obtain high sensitivities yet avoid saturation effects.

2. Air Sampler Design. As shown in Figure VI-1, the Air Sampler contains five exchangeable bottles. With the exception of bottle number 3, which uses an evacuated grab sampler, the bottles are connected to a pumped manifold. Two Viton diaphragm pumps are connected in parallel to the manifold, and two bottles are operated simultaneously with balanced flow rates. A small fraction of the pumping capacity is shared with the Dew Point Hygrometer and Humidity Monitor. (The location of the Air Sampler within the IECM is shown in Figure I-1.)

The throughput of the pumps can be simply described as the product of the pressure and the pumping speed; however, several factors complicate determining the throughput for the bottles. The pumping speed varies somewhat with pressure difference across the pump as well as with absolute pressure. Due to depressurization of the cargo bay with altitude, the throughput of external gas passing through the bottle will decrease even faster than the pump's throughput since expansion of gases from the bottle will negate some of the external volume required by the pump. Best estimates indicate that for a pressure difference $\Delta P \approx 1200\ N/m^2$ (5 in H_2O), each of the chosen pumps should provide approximately 45 torr liter/s throughput at standard atmospheric pressure, with the

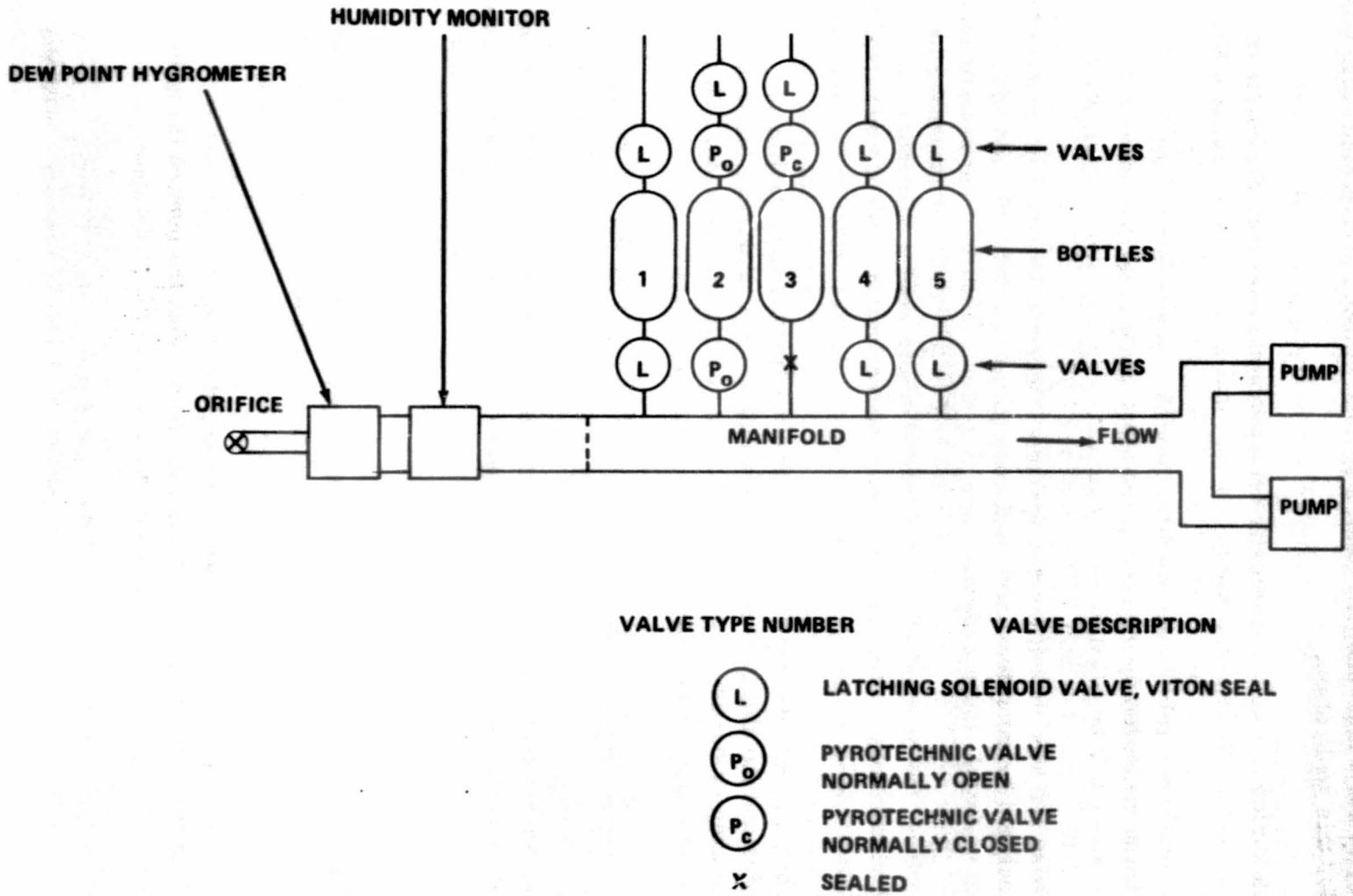

Figure VI-1. Schematic of Air Sampler bottles and valves.

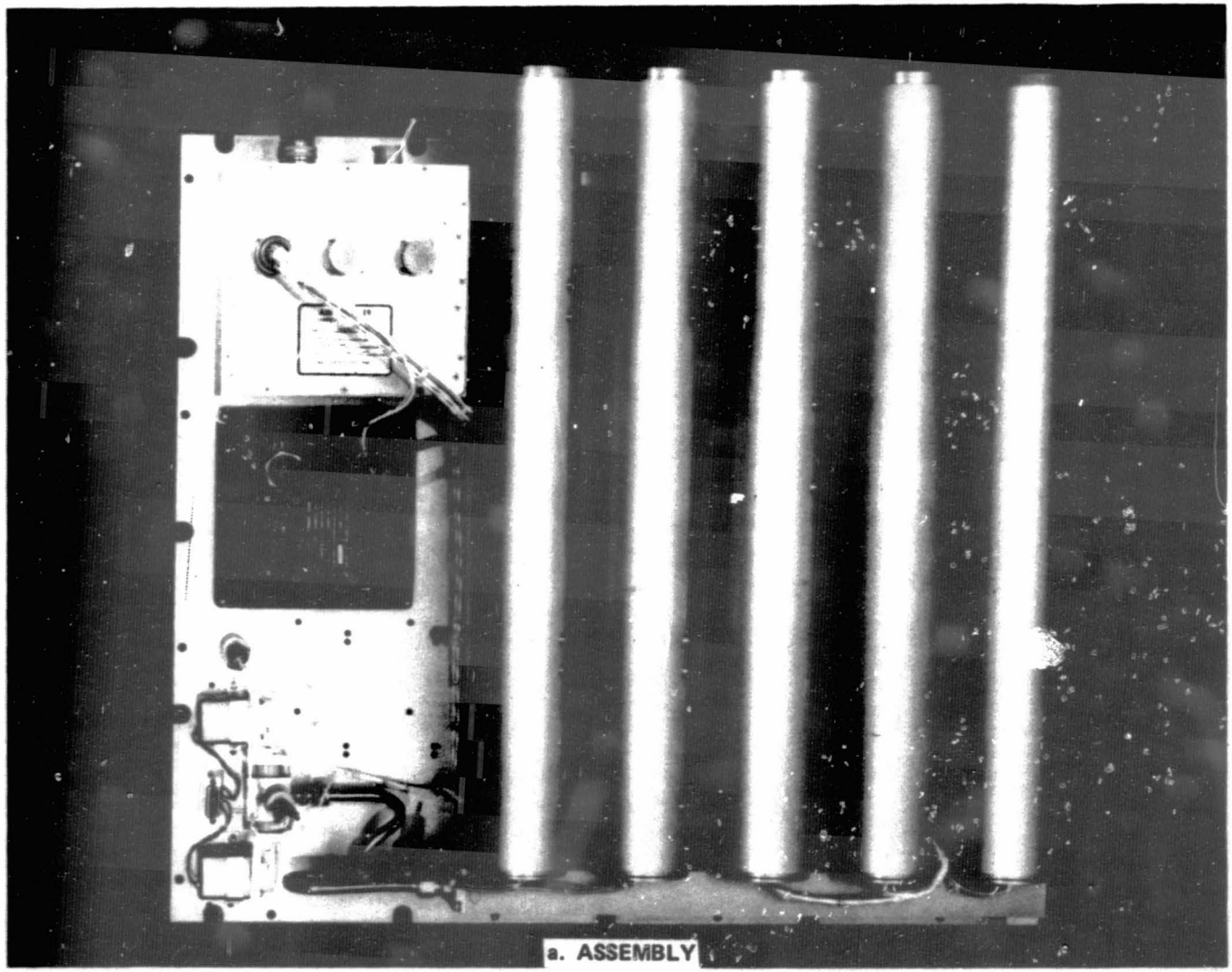

Figure VI-2. Air Sampler assembly.

ORIGINAL PAGE IS
OF POOR QUALITY

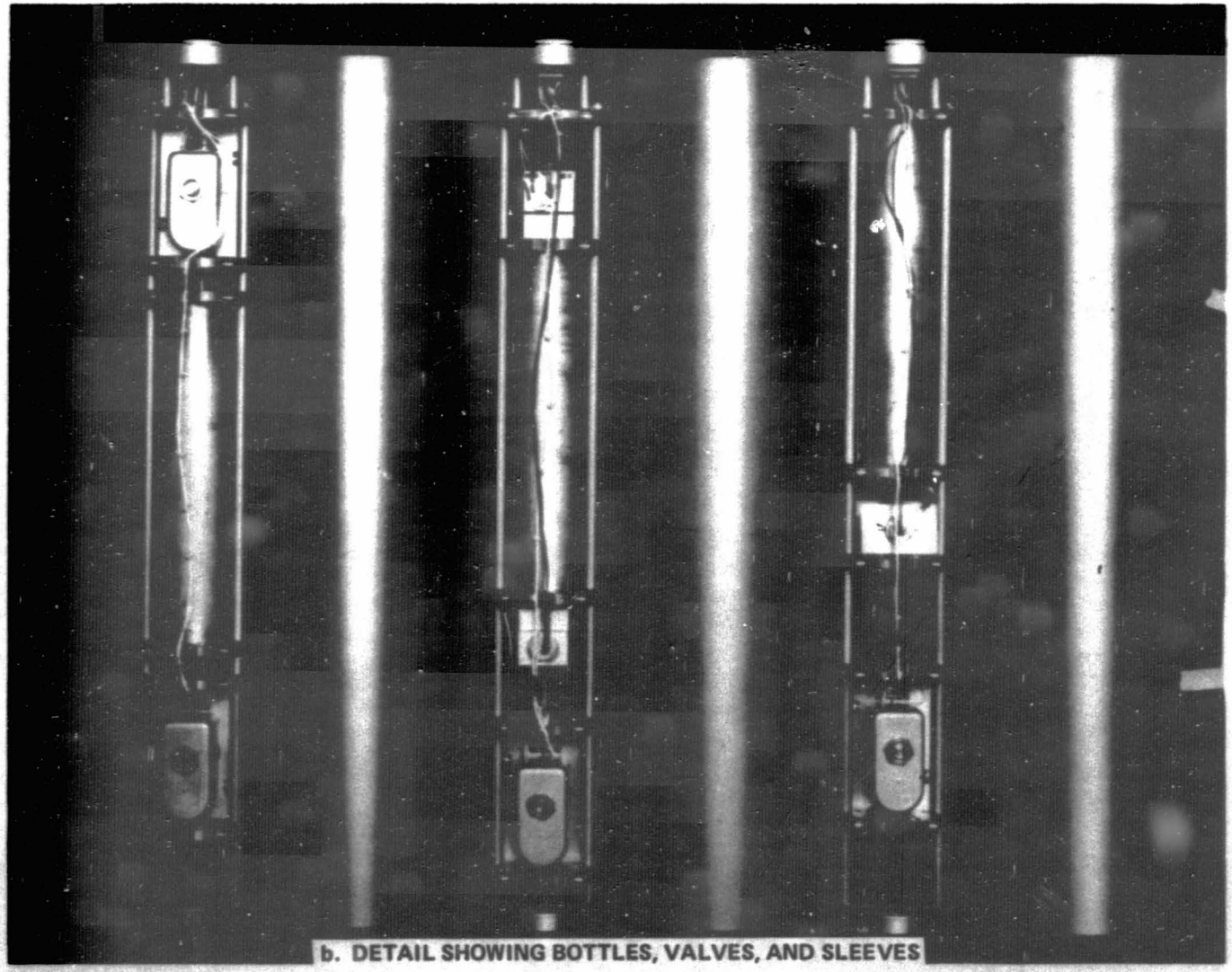

b. DETAIL SHOWING BOTTLES, VALVES, AND SLEEVES

Figure VI-2. (Concluded).

throughput decreasing during depressurization. At approximately 0.25 atm (2.7×10^4 N/m^2, or 200 torr), the pumps will no longer be effective. Since this pressure is reached approximately 60 s after lift-off, the ascent bottles' valves are commanded to close at this time. Approximately 1300 torr liters per bottle should be sampled during this period of 1 min, with half of this amount collected in the first 16 s. This corresponds to 1.7 standard liters, which is over twice the sampling bottle volume. Above this crossover point for the pump, a different collection scheme is required; i.e., the evacuated grab sampler located in position number 3.

The sample bottles, shown enclosed within the covers in Figure VI-2a, are basically the same for all locations except for valving design and contents. The bottle volume with tubulation is approximately 0.75 liter; the bottles are constructed of stainless steel. Following cleaning, passivation, and vacuum baking, the contents are loaded.

Depending on their function (condensible or reactive sampling), the bottles are loaded with oleophyllic adsorbents or reactive surfaces. Each adsorbent and its holder are discussed in detail separately.

3. Hardware Description. The hardware is shown in Figure VI-2. A number of constraints as well as design philosophy led to the existing hardware. A major problem existed with valve selection, and previous attempts by others to develop a bottle with specially designed valves for this mission were not considered sufficiently successful to permit manufacture at an acceptable cost level. Basically, it was concluded that no commercial valve existed which could be commanded to open and close repeatedly and yet guarantee a high-integrity seal for long periods of time. The selected latching solenoid valve has the bistable, repeatable operation-on-command features but cannot guarantee high-integrity seals, while the pyro valves have a unique single-shot operation with higher seal integrity. The solenoid valve has Viton seals, the normally closed pyro valve shears off the end of a sealed tube, and the normally open pyro valve drives a metal plug into an opening.

The Air Sampler was originally designed for the Orbital Flight Tests (OFT's) under severe monetary and time restrictions but only mild mass constraints. However, subsequent decisions to fly the IECM on additional flights having larger payloads has increased the constraints on the masses of the IECM instruments. The decision to use basically one bottle design with different valve configurations does not provide the least massive hardware but does simplify manufacturing details and provides greater convenience in mounting and removing the bottles from the pump and support frames. The size of the inner bottle was dictated by the volume needed for grab sampling at low pressures and the

original intention of using a large volume of coated quartz wool. The subsequent decision to abandon the use of quartz wool in favor of platelets could allow a reduction in size of some of the bottles, but only with added expense and scheduling problems; the size reduction would be small, at best, since the available valves, their tubulations, mounting details, etc., would still result in a reasonably large volume. Any changes in the outer cylinder housing the bottles and valves could complicate mounting designs. If each unit had different lengths, it would be more difficult to provide proper bottle and valve supports, the correct intake and exhaust port positions, simple electrical connections, and easily accomplished mounting and demounting operations; also, the interchangeability would be more restricted. The use of passivated stainless steel for the bottles is based on the requirement that the bottles for the reactive samples should show little or no reactivity to HCl, HNO_x, etc., and the preference not to use large, fragile glass bottles. The passivation will utilize phosphoric acid and avoid hydrochloric and nitric acid treatments to minimize any possible confusion about outgassing of these components during long storage of the evacuated grab sampler. Some reduction in mass could be accomplished by using lighter weight materials for nonreactive bottles. Thus, the additional complications in using separate designs and the added cost and time involved has to be compared to the existing design in which complete units can be plugged in and pulled easily for quick turnaround and in which all intakes, exhausts, and electrical connections are at common levels.

If weight problems exist with flights after the OFT's for which the Air Sampler was designed, and redesigns are desired, it might be easier to detach the bottle designs from the IECM and place adsorbent filters in the vent lines used to exhaust and repressurize the cargo bay on ascent and descent. The throughput would be large and representative of species present throughout the bay.

A second major problem in hardware design involves the pump used to increase the throughput. Remaining within size and power constraints while obtaining a reasonable pumping speed and operating range required considerable effort. A positive displacement rotary pump was originally considered but eventually discarded because of cost and other difficulties.

A commercial diaphragm pump driven by a brushless dc motor has been modified for this application and performs in a similar manner to the rotary pump. The modifications to meet flight requirements necessitated: (a) hand fitting replacement bearings of Kel-F, (b) replacing the eccentric with Kel-F, (c) conformal coating of the printed circuit board with acceptable material, (d) replacing wires using Teflon insulation, and (e) incorporating electrical

noise filters in the line. While completely satisfactory for ground sampling operations, the ascent sampling suffers from the depressurization problem (discussed separately), and the pump is effective only at low altitudes (during the first minute of ascent); grab samplers have to be used at higher altitudes during ascent.

C. Instrument Performance

1. Sampling of Condensibles. The best method of determining volatile species is gas chromatography (GC). Nanogram quantities can be detected, and the use of a mass spectrometer (MS) detector permits the detection of orders of magnitude smaller quantities. The combination of these two instruments (GC/MS) can provide a highly sensitive and selective device; however, the volumes that this instrument can accept are quite small. It is necessary that the unknown condensibles be concentrated to obtain optimum performance.

Adsorption onto appropriate large area solid surfaces is the most efficient enrichment technique. Solvent extraction or thermal desorption can subsequently be used to regenerate the adsorbed species for analysis, with thermal desorption being preferred for the present application. During the thermal desorption phase, care must be exercised that proper materials and procedures have been adopted to minimize any erroneous outgassing of contaminants that were not collected.

Appropriate adsorbents having sufficient surface area, inertness, and thermal stability are required. The adsorbents selected are: (a) Tenax GC, a thermostable polymer with a recommended upper temperature limit of 400°C, and (b) Spherocarb, a carbonaceous molecular sieve used as a backup in tandem with the Tenax GC. These materials do not create outgassing problems and are packed in Pyrex tubes which are removable for insertion into the thermal desorption system. Other materials, such as Teflon, Viton, stainless steel, and aluminum, are chosen for the assembly in the bottles to minimize any internal contamination.

The specific retention volume, Vg, of a given compound on a selected adsorbent is an important quantity to consider in the measurements. The Vg data must be larger than the anticipated sample volume to assure total adsorption. If the sorbent is not overloaded, an exponential relationship exists between Vg and the reciprocal of the absolute temperature:

$$\log Vg = a\left(\frac{1}{T}\right) + b$$

where

$$Vg = (t_{ms} - t_m) \cdot F \cdot j \cdot \frac{1}{W}$$

and

Vg = specific retention volume at T ° Kelvin (ml)

t_{ms} = nonadjusted retention time (s)

t_m = dead time (s)

F = flow of carrier gas (ml/s; 760 torr, 20°C)

j = Martin factor (pressure drop volume correction factor)

W = weight of sorbent (gm)

T = absolute temperature (T ° Kelvin)

a = slope of linear relationship

b = intercept.

For specific compounds and sorbents, Vg can be determined and compared to the anticipated sample volumes. If the results indicate that the enrichment device needs to be excessively large, Tenax can be coupled in tandem with another more active adsorbent but not mixed. In practice, retention volumes depend on the total amount of substances adsorbed, and excessive loading can result in displacement effects; in such cases, heavier substances may displace lighter, more volatile species, biasing the analysis toward the less volatile unknowns. Most displacement difficulties should occur for the ground sampling cases where long integration times are involved. For that reason, some of the ground sampling times will be fairly short to assure an accurate representation of species. Control of the flow by calibrated apertures and known pumping characteristics is incorporated into the sampler design, and precautions are being taken to avoid problems with the specific retention volumes of anticipated contaminants.

Carefully packed absolute quantities of the adsorbents will be prepared so that all sample tubes will have essentially the same permeability within a narrow range to simplify calibrations. Well-sealed, leak-checked joints and the determination of flow rate as a function of vacuum and pump characteristics will insure improved accuracy. After each flight, the system will be taken apart, cleaned, and charged with conditioned adsorbent tubes for the next flight. Highly purified air will serve as a sample gas for a blank of the entire system, and the retention behavior for a large number of candidate substances will be established in advance, allowing predictions of recovery yields (see Table VI-1 for examples of recovery yields). It is known from previous experiments that no sample alteration occurs upon storage under reasonable conditions; however, a control experiment will be undertaken to verify sample integrity under some of the post-flight storage conditions [i.e., temperatures up to 60°C (140°F)].

Some potential difficulties are: (a) retention behavior of low boiling point compounds if excessive temperatures are involved (if air flow is restricted after collection, the possibility of loss will be reduced); (b) high water content could result in condensation inside the adsorbent tube, requiring dry gas purging and some sample loss; (c) very polar substances are extremely difficult to analyze; thus, substances such as methanol could not be determined qualitatively; (d) the limited outgassing can usually be identified and subtracted using blank samples; (e) in layer traps with several adsorbents, the absolute amount of a substance must be obtained by addition; and (f) very reactive polar or thermolabile substances may be changed or lost; the probability is unlikely but possible with any kind of sampling procedure.

2. Approximation of the Sensitivity of the GC/MS Analysis for Various Condensibles. The sensitivity of these measurements will depend upon a number of factors: the recovery fraction for the specific hydrocarbon or other material (Table VI-1 lists a number that have been measured), choice of the kind and amount of adsorbent (too much can add to the background), and the GC/MS instrument and operating techniques. The in-house GC/MS has a membrane separator and is very sensitive ($\sim 10^{-12}$ g) for a number of hydrocarbons; however, it accomplishes this sensitivity at the expense of resolution. Since the unknown samples are likely to be quite complex, the initial analyses will be performed under contract using an instrument of lower sensitivity but higher resolution. Typical spectra of environmental contamination, solvents, cigarette smoke, etc., indicate that recoveries up to approximately 90 percent can be expected down to 10 ng using the correct amount of Tenax GC adsorbent for a given sampling task. Slightly higher sensitivities might be possible by modifying techniques, if necessary. For a moderately low molecular weight material (22.4 gm), a liter of vapor at standard temperature and pressure (STP) would

ORIGINAL PAGE IS
OF POOR QUALITY

TABLE VI-1. RECOVERY OF SELECTED COMPOUNDS ON TWO ABSORBENT TUBES CONNECTED IN SERIES[a]

Conditions: tube, 88 × 2.2 mm I.D.; filled with Tenax GC, 60-80 mesh; flow rate, 80 ml/min for 12 min; sampling temperature, 22-26°C; desorption temperature, 320; amount of single component, 30-100 ng.

Compound	MW	BP (°C)	Recovery (%)[b]		Lost[c]
			Tube 1	Tube 2	
Alcohols					
Methanol	32	65	< 2	< 4	>90
Ethanol	46	79	< 3	< 5	>90
Isopropanol	60	82	55	20	25
1-Hexanol	103	158	>90	< 5	< 5
1-Octanol			>95	< 5	< 3
Ketones					
Acetone	58	56	35	25	40
Methyl isobutyl ketone	100	117	95	< 5	< 3
2-Octanone	128	173	95	< 5	< 3
Alkanes					
n-Pentane	72	36	35	30	35
n-Hexane	86	69	65	20	15
n-Octane	114	126	>95	< 5	< 3
n-Decane	143	174	>95	< 5	< 3
n-Tetradecane	198	254	>95	< 5	< 3
n-Octadecane	255	316	>95	< 5	< 3
Cyclohexane	84	81	75	15	10
Alkenes					
1-Octene	112	121	>95	< 5	< 3
Esters					
Ethyl acetate	88	77	65	25	10
Butyl acetate	116	126	>95	< 5	< 3
Halogenated hydrocarbons					
Dichloromethane	85	40	15	20	65
Chloroform	119	62	85	10	5
Bromoform	253	150	>95	< 5	< 3
Trichlorotrifluoroethane	187	478	15	15	20
Aromatic hydrocarbons					
Benezene	78	80	65	30	5
Toluene	92	111	>95	< 5	< 3
Ethylbenzene	106	136	>95	< 5	< 3
Cumene	120	152	>95	< 5	< 3
Mesitylene	120	165	>95	< 5	< 3

a. Table from G. Holzer, J. Oro, and W. Bertsch, "GC-MS Evaluation of Exhaled Tobacco Smoke," J. of Chromatography, vol. 126, 1976, pp. 771-785. Similar measurements are being utilized in the Air Sampler. A 3.5 liter sampled volume (approximately the vital capacity of lung) identified a number of species at 1 ppb.

b. Average results from 3 runs.

c. Calculated by difference.

contain approximately 1 gm; since approximately 10^{-8} gm is detectable, recovery of approximately 90 percent indicates that nearly 10 ppb is detectable if 1 liter of gas is passed through the adsorbent, and higher sensitivities are possible for greater throughput until breakthrough occurs. For longer integration times on the ground, larger quantities of the adsorbent are used to minimize breakthrough (in addition, a backup adsorbent in tandem is used to further reduce breakthrough problems).

The greatest problem involves collection at the reduced pressures during ascent. Above 13 km (40 000 ft) the pumps used to pull gas through the adsorbents are ineffective; and at the lowest pressures (approximately 133 N/m^2 or 1 torr), evacuated sampling bottle volumes of approximately 1 liter would be needed to obtain sensitivities to condensibles in excess of 10 ppm. At least for OFT-1, ascent samples are not planned for condensibles above 13 km. If the Passive Sample Array or other experiments suggest that excessive condensibles may have been present at the higher altitudes, then grab sampling or other sampling techniques will be attempted for the high-altitude condensibles on future flights.

For descent sampling, it is planned that complete evacuation occur in orbit before descent; thus, the repressurization of the cargo bay will assist in filling the bottles, and the pumps will increase the throughput at higher pressures. Using the previous recovery fractions and sensitivities, it should be possible to detect the order of 10 ppm after reaching a pressure of a few hundred Newtons/meter^2; and as the pressure increases, unknowns present in smaller amounts should be detectable, with the ppb range being reached near ground level.

3. Sampling of Reactive Species. Compared to the sampling of condensibles, the reactive sampling is specific. Since one is not at liberty to introduce water, which is common for most of the reactions determining vapors of acids and bases, specific surfaces have been chosen to react with the anticipated contaminants in a predictable manner without water. The reacted samples can be subsequently analyzed to verify the qualitative results and to determine the quantitative information.

For the sampling of HCl, which is expected during ascent, platelets (approximately 2.5 cm^2 active area each) coated with several thicknesses of Ag_2O will be used; the thicker coatings will be required if unusually high concentrations of HCl exist that might saturate the Ag_2O films. Four platelets will be held in place in each container bottle, with three spacer platelets separating these four. The three spacers can be either blanks or coated surfaces[1] supplied

1. Teflon electrets are being investigated for use as spacers to collect and study particulates present during grab sampling.

by other investigators, as long as they do not interfere with the function of the Ag_2O platelets (optical surfaces, etc.). Opening of the sample container and transfer to the analyzer chamber will be in a dry argon atmosphere. Samples of exposed platelets with $AgCl/Ag_2O$ surfaces will be analyzed on a photoelectron spectrometer equipped with a pulse height analyzer readout and position-sensitive detector. The surface layer will be analyzed for Ag (3d 1/2 shell), O (1S shell), and Cl (2p3/2 shell). The intensity of the Cl signal (10 min accumulation) will be referenced against the Ag signal (1 min accumulation) and the ratio compared to a calibration curve for Cl/Ag. The calibration consists of running six concentrations of HCl/N_2, 10, 25, 50, 100, 200, and 400 ppm. A 1-liter glass bottle containing the HCl/N_2 will be vented into an evacuated sample bottle; the sample bottle will be closed after dosing and allowed a 1-h reaction time after which the samples will be analyzed as described previously. In-depth analyses of heavily reacted films can be obtained by sputter etching during analysis if necessary, and subsequent analyses with a scanning electron microscope and X-ray energy dispersion analyzer can be used to verify the distribution (non-particulate, etc.).

Sampling of nitrogen compounds, which are expected during descent, can be obtained by reaction with ruthenium compound surface coatings. $RuCl_3$, $Ru(CO)_x$, and $Ru(OH)_3$ react strongly with NO_x/NH_3 compounds. Identical platelets and holders will be used as previously described, except for the platelet coatings. Similar analyses and calibration procedures will be used in determining the Ru(3d5/2 shell) and N(1S shell) intensities. Also, the N(1S) peak will show the type of nitrogen present as N(II), N(IV), N(V), and NH_3. Different oxidation states of nitrogen will be retained intact by the ruthenium surface. These will be distinctly resolved by the X-ray photoelectron analysis. Both quantity and type of nitrogen will thus be analyzed. Calibrations will be performed with mixtures of NO, NO_2, and NH_3.

4. Approximation of the Sensitivity for Analysis of Reactive Species. Approximate sensitivity measurements have been made[2] using photoelectron spectroscopy. Treated, evacuated glass bottles containing the samples were dosed to pressures ranging from 133 to 665 N/m^2 (1 to 5 torr) with various ppm of the reactive species. The observed sensitivities are approximately 10 ±5 ppm at present, and the addition of recently purchased and Government-furnished instrumentation (newer detector and multichannel analyzer) is expected to improve the sensitivity further. Tests are in progress to determine if the passivation process for the stainless steel bottles will be satisfactory or if gold plating or other coatings will be necessary.

2. Dr. D. Zatko, University of Alabama, Tuscaloosa, Alabama.

Based on a 200 N/m^2 (1.5 torr) pressure (at SRB staging altitude), 0.75 liter bottle, and 10 cm^2 reactive surface area (four platelets of approximately 2.5 cm^2 each), the following calculation can be made:

$$\frac{0.75 \text{ liter}}{\frac{760 \text{ torr}}{1.5 \text{ torr}} \; 22.4 \text{ liter/mole}} \times 6.02 \times 10^{23} \text{ molecules/mole} \times 10 \text{ ppm}$$

$$\approx 5 \times 10^{-14} \text{ reactive molecules} \quad .$$

Reacted over 10 cm^2 this amounts to approximately 5×10^{-13} molecules/cm^2, which indicates that for 10 ppm to be detected at 200 N/m^2, the measurement should be sensitive to considerably less than 0.1 monolayer (possible), and the reaction needs to show a strong preference for the sample surface and not the bottle (by design). As long as reaction with the walls is small, reduction of the sample area should increase the surface density of the reactant, but some trade-off with statistics provided by a number of samples is involved. Also, a wider range of measurements without saturation effects is provided by larger areas. It should be possible to accommodate concentrations of HCl in the range of hundreds of ppm at 200 N/m^2 and still have a high sensitivity. Knowledge gained between flights should also allow optimization of platelet surfaces for sensitivities required during selected sampling periods.

5. Summary. The anticipated variety of gaseous contaminants and collection conditions requires a diversity of collection and analysis techniques. Condensibles are concentrated by adsorption on oleophyllic adsorbents and subsequently analyzed by GC/MS techniques. Specific reactive species are reacted with carefully chosen surfaces and subsequently analyzed from X-ray generated photoelectrons.

As listed in Table VI-2, it is expected from the designed sensitivities that all anticipated contaminants to be monitored (Project Plan, IECM) can be detected if present at the listed levels or greater.

Each sampling phase (ground operations, ascent-low altitude, ascent-high altitude, and descent) has its own unique problems which have been examined and solved to an extent that is reasonably compatible with other system requirements (size, complexity, power requirements, scheduling, and costs).

TABLE VI-2. AIR SAMPLING BOTTLE CHARACTERISTICS

Bottle Location Number[b]	Primary Sampling Function	Estimated Sensitivities[a]	Valve Types Used[b]	Bottle Contents
1	A. Condensibles, ground operations	≤10 ppm	None (manually capped)	Tenax GC, Spherocarb, 400 mg each in tandem
	B. Condensibles, descent and post-flight prior to access	Altitude dependent, 10 ppb to 10 ppm	Latching solenoid	Tenax GC, Spherocarb, approximately 75 mg each in tandem
2	Condensibles, ascent	Altitude dependent[a]	Two Pyro N.O. and latching solenoid	Tenax, GC, Spherocarb, approximately 75 mg each in tandem
3	HCl, grab sampling	10±5 ppm at 1 to 5 torr	Pyro N.C., latching solenoid	Ag_2O, coated platelets
4	HCl, ascent	10±5 ppm at 1 to 5 torr	Two latching solenoids	Ag_2O, coated platelets
5	Nitrogen compounds, descent	10±5 ppm at 1 to 5 torr	Two latching solenoids	Ruthenium compound, coated platelets

a. See Appendix.

b. See Figure VI-1.

ORIGINAL PAGE IS OF POOR QUALITY

D. Operation

Ten bottles will be available for ground sampling in the number 1 location. These have no valves but are manually capped and uncapped. Five bottles are intended for each mission, with the other five serving as backup bottles and for rotation (measurements and refurbishment will alternate with mission operations, with five in each cycle). Five preflight operational periods have been identified: (1) an early period at the Orbiter Processing Facility (OPF) location, (2) during the last 2 weeks before leaving the OPF, (3) at the Vertical Assembly Building (VAB) after mounting on the Mobile Launch Platform, (4) an early period after transfer to the launch pad, and (5) during the last week before closeout for flight. Variations in these operational periods may occur in later OFT and Spacelab flights based on knowledge gained from the first flights. Measurements are being considered during the transit from the OPF to the VAB because of concern expressed by experimenters about the environmental temperature and humidity during this time.

For typical contamination levels, between 10 and 100 standard liters can be pumped through the 400 mg of ground sampling adsorbent before worrying about saturation effects. The ground sampling throughput will be controlled by pump operating time and capping and uncapping. A total cumulative time of approximately 10 min is permitted during each operational time. This integrated sampling will be logged for operating and capping events. Much longer integration times can be accomplished by increasing the adsorbent mass at the expense of having optimum measurement conditions for determining low concentrations. Early results could dictate additional adsorbent mass in later flights if unusually high contaminant concentrations are observed.

At the last access a condensible sampling bottle with latching solenoid valves will be mounted in location number 1; all bottles will be uncapped, and the pyro valves will be armed. The Data Acquisition and Control System (DACS) will open the latching solenoids on number 2 and number 4 bottles. After approximately 1 min, when the pumps cease to provide throughput, the normally open pyro valves on number 2 bottle will be fired to provide high-integrity seals for the condensibles, and the latching solenoids will close on number 4 bottle, containing the gases sufficiently long for any HCl present to react with the specific adsorbent. Number 3 bottle's normally closed pyro valve will be opened immediately after SRB staging, filling this evacuated grab sampler bottle; shortly thereafter, a latching solenoid on the number 3 bottle will close to contain any HCl for reaction.

The descent bottles (condensible sampling in location 1 and reaction sampling in location 5) will have their latching solenoid valves opened in the high vacuum of orbit sufficiently long to assure that good vacuums exist in these bottles. During descent, the pump, which was turned off after its effectiveness for humidity and dew point measurement requirements were met, will be turned on again as the cargo bay repressurizes. Another role for location 1 is to subsequently provide post-flight ground sampling of condensibles before access to the bay area is permitted.

INSTRUMENT SPECIFICATION SUMMARY
AIR SAMPLER

Physical Characteristics:

Weight

Sensor —	40 kg
Electronics —	1 kg
Total	41 kg

Dimensions — 18 × 76.5 × 72.9 cm

Power Requirements:

Operational mode — 28.6 W (no valves)
Standby mode — 11.6 W (no pump)
Total with one pyro firing — 168.8 W for 50 ms
Total with one electromagnetic valve — 67.6 W for 100 ms

Performance Data:

Data output — Samples to lab + voltages
Sample rates — See discussion in text
Resolution — See discussion in text
Accuracy — See discussion in text

VII. CASCADE IMPACTOR (IECM04)

Billy J. Duncan

A. Objective

The Cascade Impactor provides a determination of concentration and particle size distribution, as a function of time, of suspended contaminants in the spacecraft environment. In addition to the cascade stages, the impactor measures the amount of airborne nonvolatile residue (NVR) for molecules with sufficiently high sticking coefficient at the temperature environment encountered.

The cascade measurements are intended to provide a temporal history of the spacecraft's particulate environment during the prelaunch and ascent periods as well as the descent and post-launch periods. The NVR stage will provide data throughout the mission, including the on-orbit phase.

B. Instrument Description

The Cascade Impactor was originally developed by Celesco, Inc., Irvine, California, with a prototype unit delivered. The company was subsequently dissolved, and other proposals for unit production were not within budgetary constraints. Therefore, the decision was made to fly the prototype unit, with testing, modifications, integration, etc., being handled in-house at Marshall Space Flight Center.

The Cascade Impactor consists of four stages of quartz crystal microbalances. The first (NVR) stage measures accumulation of molecules whose condensation rate exceeds vaporization at the environmental conditions encountered when directly exposed to the sampling space. The remaining three stages are a cascade of jet impactors wherein the crystal surfaces are impacted by jets from small nozzles through which the ambient air is pumped. A thin layer of Apiezon grease is used on the crystal surface to capture the incoming particles. A single pump draws air through all of the stages whose individual nozzles are progressively sized to provide discrimination in the 0.3, 1.0, and 5.0 μ particle size ranges. Basic sensitivity of the "AT"-cut quartz piezoelectric crystals operating at 10 MHz is 4.43×10^{-9} gm/cm^2 Hz, with a 0.3166 cm^2 active area. The 3000 Hz readout instrumentation limit provides a mass range of 4.2×10^{-6} gm, resolvable to 1 Hz (or 1.4×10^{-9} gm). To eliminate instability problems, the

instrument will operate in a differential mode so that an instantaneous rate of change of crystalline frequency is proportional to volumetric particle contaminant concentration.

Each stage of the Cascade Impactor consists of a pair of 10 MHz "AT"-cut quartz crystals operating in a modified Colpitts oscillator circuit. One of the crystals is used as a sensing element, with the other as a reference element so that the output signal is a beat frequency (difference). In addition to the reduced bandwidth of the beat frequency and the resultant simplification in data signal handling, temperature compensation advantages are obtained by having the reference and sensing crystals in proximity. Coupled with the nearly zero temperature coefficient of the "AT"-cut crystals, this added compensation minimizes thermal effects. The hybrid mixer-oscillator chip completes the small electronic module, so that only low audio-frequency signals need be transmitted from the sensor head.

The reference crystal is mechanically shielded from the incoming contaminant particles; thus, the beat frequency output is proportional to the mass deposited on the sensing element due to the piezoelectric property of quartz.

In each stage, the airborne sample particles are accelerated through a flow nozzle directed toward the sensing crystal surface which acts as an impact plate in close proximity to the nozzle. The accelerated particles are acted upon principally by two forces: (1) inertia, which tends to cause impact on the crystal, and (2) aerodynamic viscous drag, which tends to turn the particle along flow streamlines, thus missing the impact plate and proceeding to the next stage.

The nozzles are sized for particle discrimination such that each stage has a 50 percent probability of impact for particles of 5, 1, and 0.3 μ diameter, respectively. Actually, for jet impactors of this nature there is a minimum particle size below which impaction does not occur and a maximum size above which all jet particles impact. The range of partial impaction is very narrow, so that each stage effectively separates the jet particles into two size ranges.

The impact probability is a function of a dimensionless ratio of the system parameters:

$$P_i = f\left(\frac{\rho V D_p^2}{\mu D_N}\right)$$

where

ρ = density of particle (gm/cm^3)

V = flow velocity (cm/s)

D_p = particle diameter (cm)

μ = fluid viscosity (poise)

D_N = diameter of nozzle (cm)

and the nozzle diameter to impact plate spacing ratio.

The impact plate spacing is usually made as small as possible without limiting nozzle flow; thus, the preceding equation serves to analyze system functioning. It can be seen that P_i increases as the function increases (i.e., the inertial forces dominate the viscous forces). As the particle size decreases, for a given density and viscosity, the velocity must increase and/or the nozzle diameter decrease to maintain 50 percent impact probability. By arranging the fluid flow through the stage nozzles in a series stream of decreasing jet sizes and increasing flow velocity, a particle size spectrometer is obtained. An exploded view of a typical cascade stage is shown in Figure VII-1.

In the first stage (NVR) microbalance, the sensing crystal is mounted in a plug-in module which is sealed behind the crystal to avoid contaminants from the stage cavity depositing on the back of the crystal. The reference crystal is installed in a hermetically sealed can and thermally joined to the stage housing to equalize temperatures between the sensing and reference crystal. A thermistor is attached to the plate adjacent to the sensing crystal with thermally conductive epoxy to measure the crystal temperature.

Stages two, three, and four are essentially identical in design, with the obvious differences in nozzle size for different particle size cutoffs. The principal stage component is a plug-in module containing the nozzle, sensing and reference crystals, and the oscillator/mixer hybrid chip. This module plugs into sockets in the sidewall of the stage housing. The stages are hermetically sealed and isolated from each other as they are screwed together during assembly.

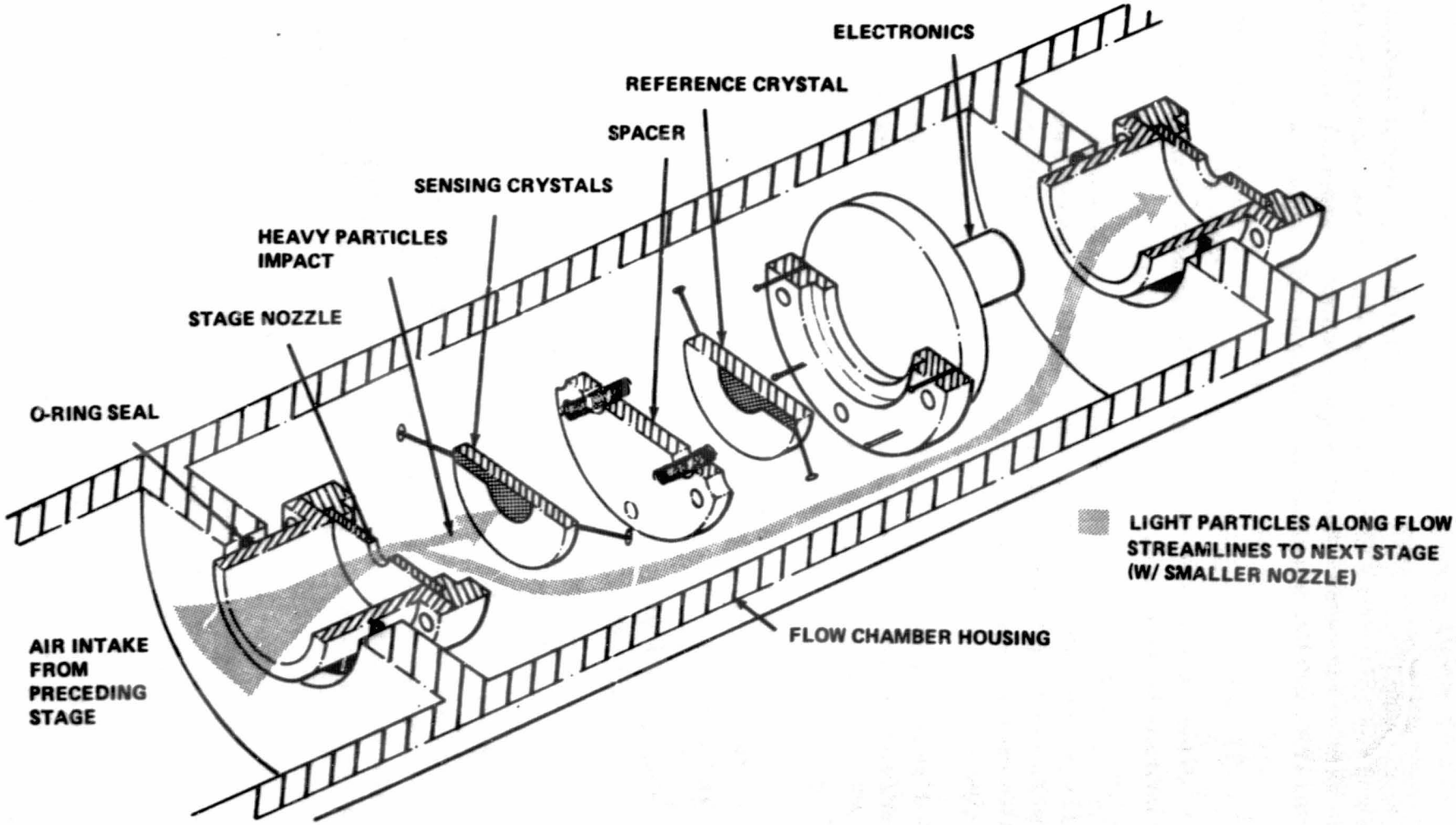

Figure VII-1. Typical cascade stage functional sketch.

The air pump is a three-vane rotor-type blower fabricated of chromed surface aluminum and graphite rotor blades. The pump is powered by a 28 V, two-phase synchronous motor. A hybrid motor controller with integral oscillator provides the 28 V, 240 Hz, two-phase quadrature signal to the motor.

The power conditioner is mechanically housed in a separate container of stainless steel which is clamped adjacent to the sensing unit and interconnected with short cabling. A separately housed input filter network provides electromagnetic interference protection.

The Cascade Impactor and the power conditioner are mechanically supported in brackety (Fig. VII-2) which attaches to the Induced Environment Contamination Monitor (IECM) package so as to provide a 2π solid angle unobstructed field-of-view for the NVR stage. Figure VII-3 shows a general assembly view.

Each stage of the four-stage cascade contains two crystals which are active elements in an oscillator circuit. The two crystal frequencies are mixed in a field effect transistor mixer. The oscillators and mixer are in the form of a hybrid chip in a T05 plug-in package which is close-coupled to the crystals in each stage. The oscillator/mixer chip receives 12 Vdc power from the power conditioner and provides the beat frequency from each stage to the data collection system of the IECM. Additional details on the design of the Quartz Crystal Microbalance (QCM) sensors are given in Sections X and XI of this report. Voltage regulation and power for the oscillators/mixers are supplied by the unit shown schematically in Figure VII-4.

C. Instrument Performance

1. NVR Stage. The basic sensitivity of the "AT"-cut quartz piezoelectric crystal, operating at 10 MHz, is 4.43×10^{-9} gm/cm^2 Hz. This stage measures accumulation of mass of contaminants whose rate of deposition exceeds the rate of evaporation (escape). The active area of the crystal is 0.3166 cm^2; therefore, the scale factor is 1.5×10^{-9} gm/Hz. Initial offset beat frequency will be set at approximately 1000 Hz; thus, the 12-bit resolution of the IECM data system will limit the dynamic range to 4.5×10^{-6} gm (12 bits $\rightarrow$ 4000 counts, 3000 counts + 1000 count offset).

2. Cascade Stages. The cascade stages operate in a differential mode, so that the rate of change of beat frequency is proportional to mass concentration of particles in the sample space; i.e.,

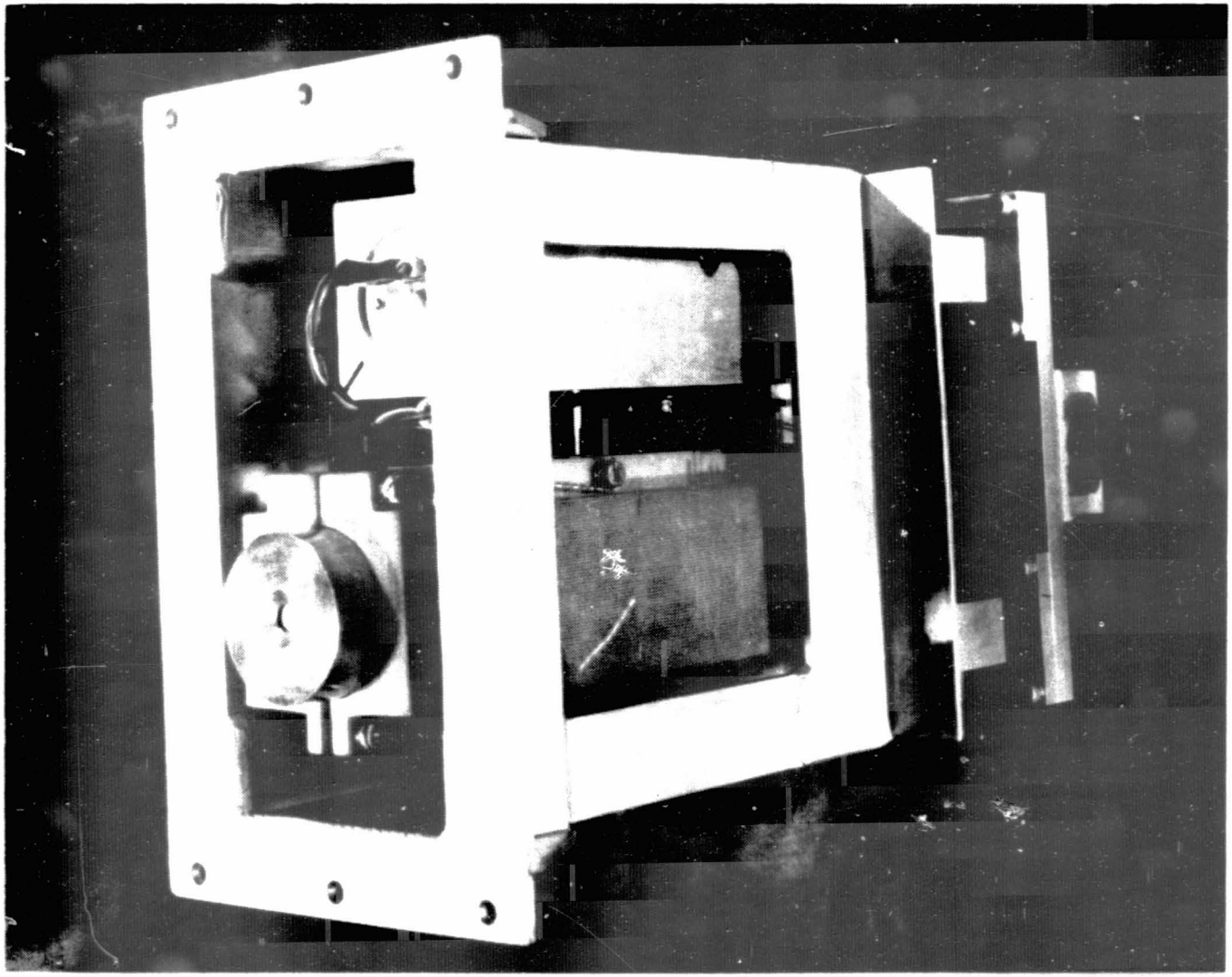

ORIGINAL PAGE IS
OF POOR QUALITY

Figure VII-2. Cascade Impactor assembly.

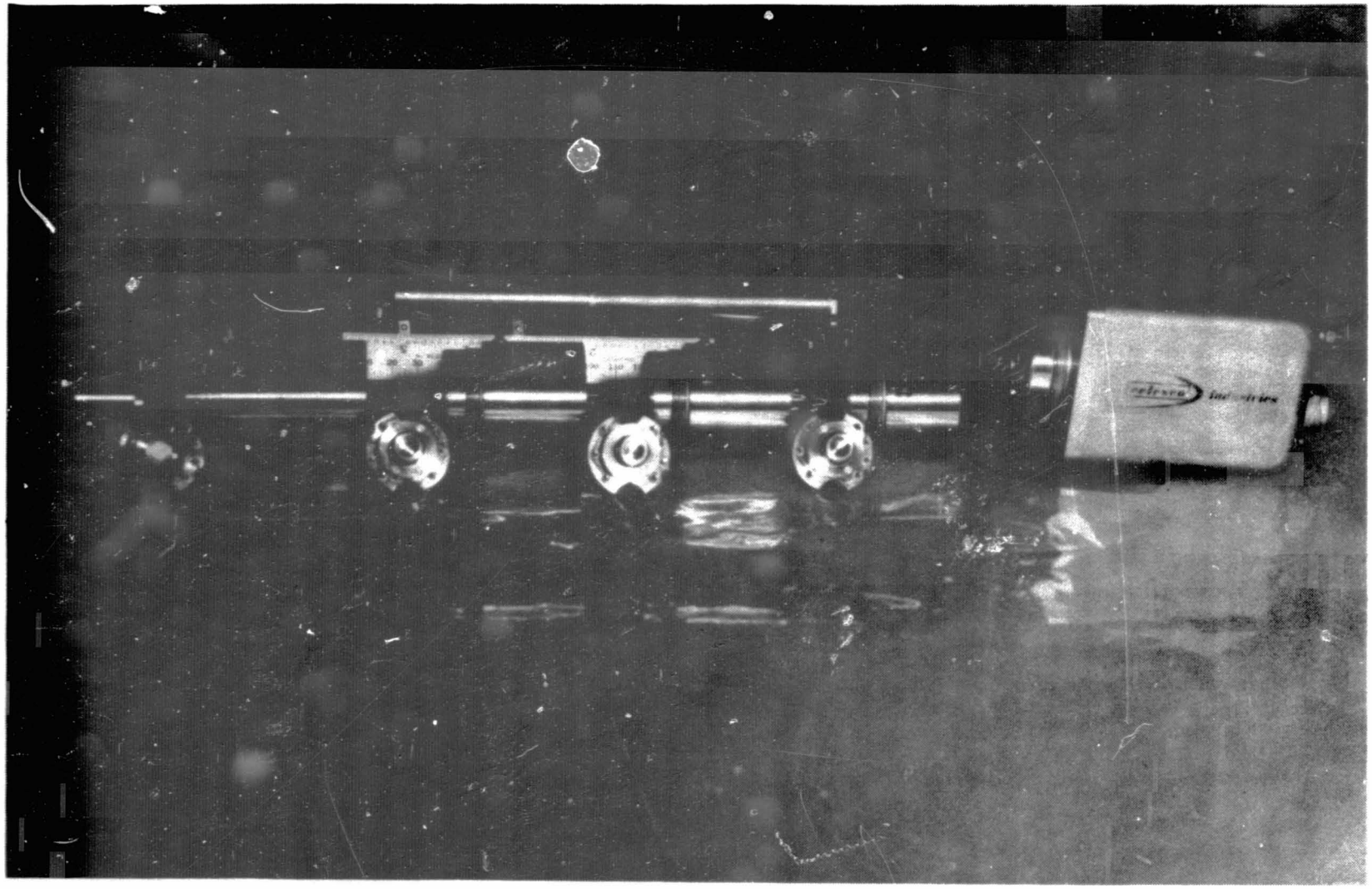

Figure VII-3. Cascade Impactor disassembled.

ORIGINAL PAGE IS
OF POOR QUALITY

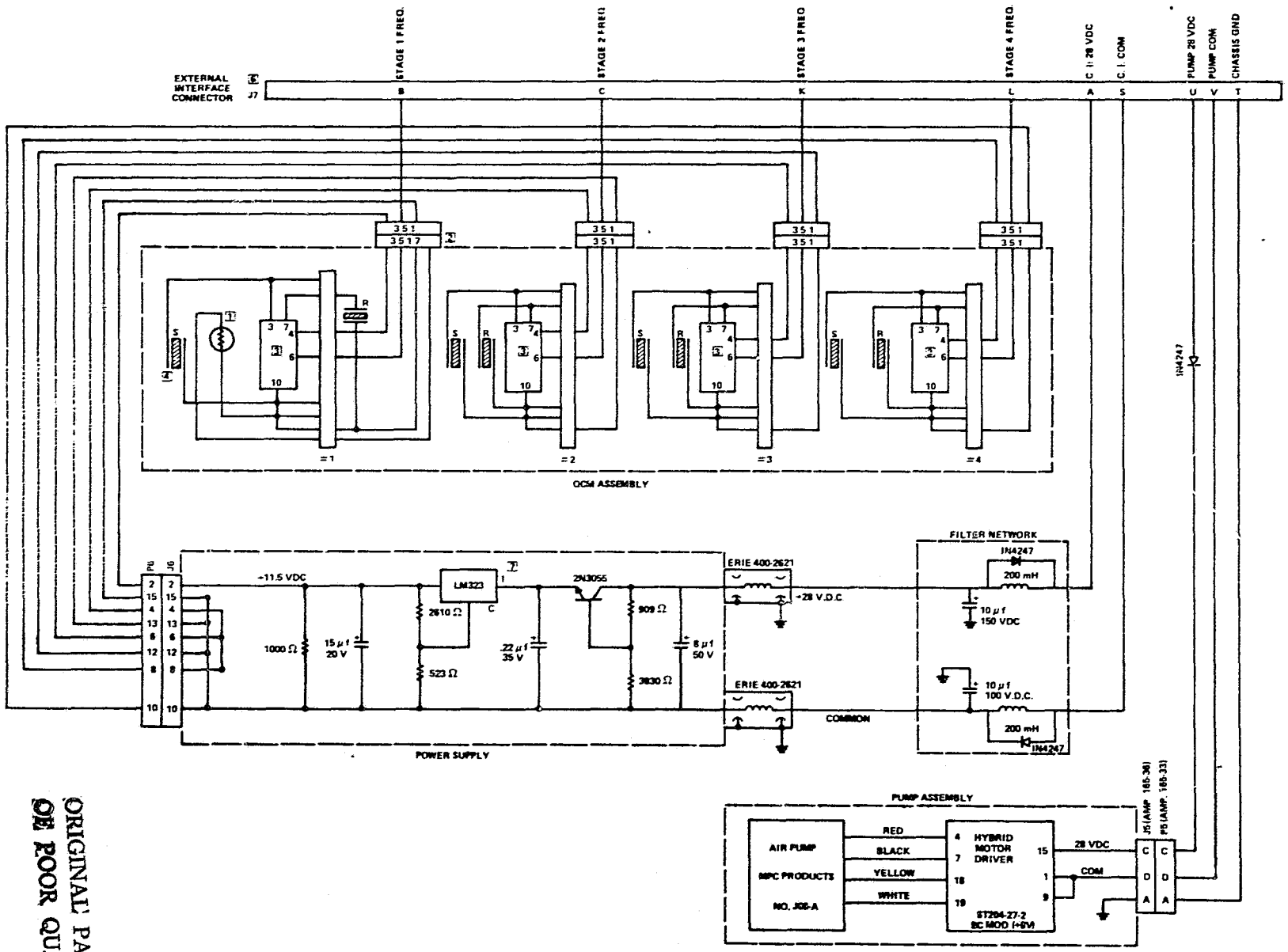

Figure VII-4. Schematic diagram of power supply for Cascade Impactor.

ORIGINAL PAGE IS OF POOR QUALITY

$$C_A = \frac{\Delta f/\Delta t}{SQ_A \times 10^{-6}}$$

where

C_A = ambient concentration ($\mu g/m^3$)

$\Delta f/\Delta t$ = beat frequency shift rate (Hz/min)

S = crystal sensitivity ($Hz/\mu g$)

Q_A = volumetric flow (ml/min) .

The crystal sensitivity is the same as for the NVR stage (1.5×10^{-9} gm/Hz → 666 Hz/gm); Q_A has been designed, in conjunction with the desired nozzle pressure drops, to be 250 ml/min through the pump.

$$\therefore C_A = \frac{\Delta f}{\Delta t}\,(\text{measured}) \cdot \frac{10^6}{666 \times 250} = 6\,\frac{\Delta f}{\Delta t}\left(\frac{\mu g}{m^3}\right) \quad .$$

Sampling rates vary from 6/min to 1/min, with the same 1000 count zero offset and 12-bit dynamic range considerations. The particle spectrometric characteristics, since particle cutoff diameter is a function of nozzle size, pressure drop, and flow rate, were empirically determined by the manufacturer. The resultant particle diameters for a 50 percent cutoff probability for the individual stages are shown in Table VII-1. The individual stage cutoff characteristics are shown in Figure VII-5.

TABLE VII-1. MASS SPECTRAL CHARACTERISTICS

Stage	Particle Diameter (μm)
2	5
3	0.816
4	0.248

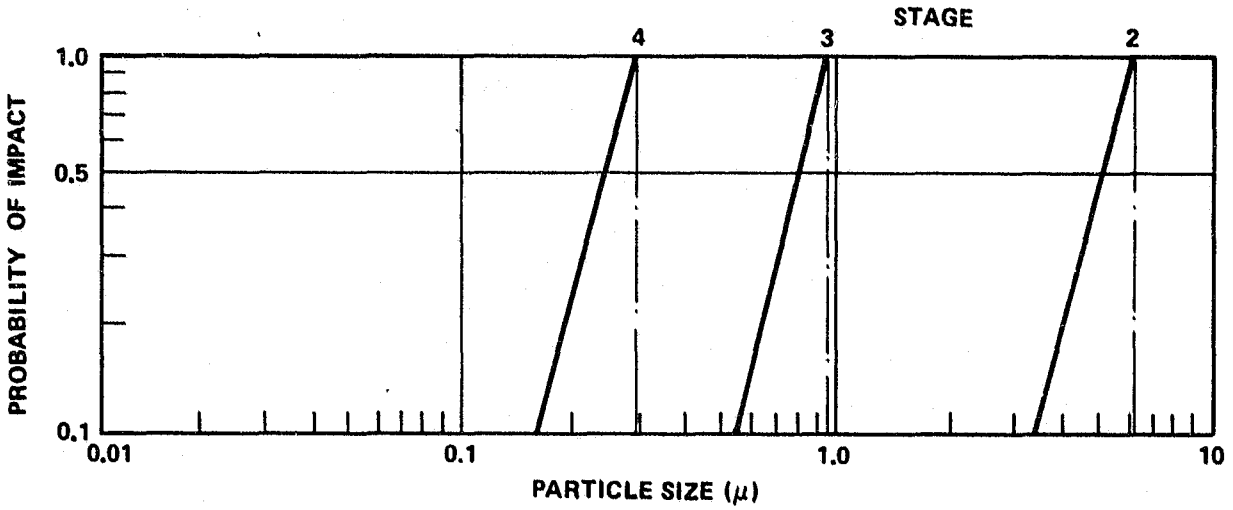

Figure VII-5. Cascade stage cutoff characteristics.

D. Data Reduction and Analysis

The data reduction requirement is fairly simple, consisting of provision of a temporal history of the four measured mass accumulations from the four frequency recordings, as corrected by the temperature recording and the pressure data. Output will be received in the form of a 12-bit binary word proportional to the beat frequency between the sensing and reference crystals.

The preflight and post-flight data [recorded on ground support equipment (GSE) as opposed to the flight recorder] will be printed out in raw data form. Selected data will be manually recorded and processed as deemed necessary at the site. The flight data (ascent and descent phases for the cascade stages plus on-orbit phase for the NVR stage) will be recorded digitally by the IECM data system together with data from other IECM instruments. Data tapes will be provided each experimenter, with identification required to strip out data from the particular experiment (in this case, the Cascade Impactor). In addition to the raw data tapes, some capability may exist for providing the analyst limited data processed in the form of plots or tabulations of mass depositions from the frequency data.

The trapped particulate matter on the cascade stages will be analyzed following the refurbishment process utilizing a scanning electron microscope. Size distribution and concentration for each of the cascade stages will be determined by examination of the scanning electron microscope direct photographs. Additional chemical analyses may be performed using X-ray attachments to the scanning electron microscope.

Refurbishment between flights will include replacement of each of the four stage modules (consisting of the sensor crystal, reference crystal, and oscillator/amplifier integrated circuit) with previously prepared modules maintained in the Space Sciences Laboratory, Marshall Space Flight Center. This will allow time for disassembly of the flown modules for analysis of the collected particulates.

E. Instrument Operation

Data will be taken once per minute for 5 min each hour at specified opportunities from the time the system is operational at Kennedy Space Center until approximately T_0-48 hours. Recording will be on hard-wired GSE instrumentation through the T_0 umbilical. The prelaunch data will be stored on "floppy" disk provided by the IECM data system, with hard copies available as desired.

The data rate will be increased to 6/min a few minutes prior to lift-off and remain through ascent (approximately 80 s). Data will be recorded digitally on board for later reduction and analysis.

During orbit, the data rate will be reduced to 1/min, with on-board recording throughout the mission. Only the NVR stage will be collecting useable data on-orbit; the cascade stages will continue to function electronically and be read out, but the pump will be inoperative.

During descent, the data rate will again be increased to 6/min and will continue for 1 h after landing. The cascade stages will again be functioning normally during this mission phase.

Auxiliary data will consist of an absolute pressure profile (from the Air Sampler) and IECM temperature history. Mission time will be available for corollary studies of the impactor data with related events (thruster firings, attitude changes, etc.).

INSTRUMENT SPECIFICATION SUMMARY
CASCADE IMPACTOR

Physical Characteristics:

Weight —

Bracket —	1.7 kg
Sensor —	2.3 kg
Electronics —	0.5 kg
Total	4.5 kg

Dimensions —

Bracketry — 18 × 20.5 × 12.5 cm
Sensor — 36 × 6 × 9 cm
Electronics — 11 × 6.5 × 2 cm
14 × 10 × 3 cm
Overall — 36 × 20.5 × 12.5 cm

Power Requirements:

Operating mode — 10 $W_{average}$ 12 W_{peak}
Standby mode — 3.0 W

Performance Data:

Data output — recorded frequency and samples for lab analysis
Bit rates — 4.8 bits/s
Resolution — 1 count → 1.5×10^{-9} gm
Accuracy — 30×10^{-9} gm

VIII. PASSIVE SAMPLE ARRAY (IECM05)

Roger C. Linton

A. Objective

An array of optical samples will be exposed to the natural and induced environments of the Space Shuttle cargo bay and the Long Duration Exposure Facility (LDEF) for later return and analysis on the ground to evaluate the optical effects of contamination. The Passive Sample Array is an integral component of the Induced Environment Contamination Monitor (IECM) on all designated flights. Inclusion of the Passive Sample Array in the IECM permits the greater scope and range of analysis required to more fully assess the physical mechanisms of degradation due to deposited contaminants.

Historically, "witness" samples passively deployed for collection of contaminants have provided valuable information at minimal cost and system or program impact, whether for ground-based thermal vacuum systems or in-flight spacecraft. The IECM Passive Sample Array is a modified outgrowth of the Passive Contamination Monitoring Device developed by Marshall Space Flight Center's Space Sciences Laboratory for deployment during preflight activities of the Apollo Telescope Mount (ATM) [VIII-1]. Design goals were simplicity, economy, modularity, and redundancy. The Passive Sample Array is indeed totally passive, all stainless steel construction, so that it cannot itself be a source of contamination if proper handling procedures are followed. Modularity is achieved by including eight trays of samples in the array, each of which can be individually removed and replaced rapidly. Redundancy to insure statistically meaningful results is obtained by duplication of samples of a type in the array.

The samples are measured in the laboratory prior to experiment integration. Control samples are included in these measurements and are then stored in a controlled, "clean" environment. Following retrieval of samples, whether during preflight activities or after the flight, the measurements are repeated and the analysis is based on any encountered changes.

Optical measurements will encompass the spectral range 100 to 250 nm, with primary emphasis in the vacuum ultraviolet. Guest sample positions are available, many of which have already been reserved. In general, the Passive Sample Array offers opportunities for many types of investigations; those measurements that are planned are deemed most appropriate to the objectives within the limited resources available.

B. Instrument Description

The Passive Sample Array contains optical mirrors, filters, and substrates, mounted in trays of six samples each. There are eight trays in the array. Figure VIII-1 shows the loaded Passive Sample Array configuration, with one tray lifted for clarity.

The sample holder (Fig. VIII-2), machined from stainless steel with six 2.54 cm (1 in.) diameter depressions, contains the designated optical samples. The samples are preceded and followed in the tray receptacles by Teflon gaskets to minimize strains on the samples themselves and to eliminate the cracking and chipping that would otherwise occur. Next in the assembly is a retainer plate containing six holes of a diameter only slightly less than that of the samples to restrain the samples yet allow a clear field-of-view for maximum sample surface area exposure. The retainer plate is etched in a manner to provide identification of the tray with the samples within. One hole in each container plate is modified so that a small additional area of one sample is covered at all times for reference measurements of thin film thickness. The final element in the tray assembly is the solid, thin cover for protection of the samples in ground handling when exposure is not required. A thin cover for the entire array is provided for additional protection during shipment. The retainer plate is secured to the sample holder tray by threaded screws with lock washers and lock nuts to insure integrity during launch and reentry. Each tray is held to the array framework by flush-mounted Camloc fasteners with quarter-turn locking. The receptacles are riveted under the edge of the array. Access to individual trays on the ground is obtained by loosening the two Camloc fasteners and lifting.

The Passive Sample Array is flush-mounted at the top of the IECM, with virtually no shadowing of any samples in the array by the Passive Sample Array hardware itself. A washer-type thermistor is mounted under one tray, using part of the retainer plate hardware, to provide a verification of the thermal design. The total weight of the sample array is 4.5 kg, with the center-of-mass at the geometric center and a few millimeters below the top surface. The Passive Sample Array experiment is designed for equally rapid access to individual trays or the entire array.

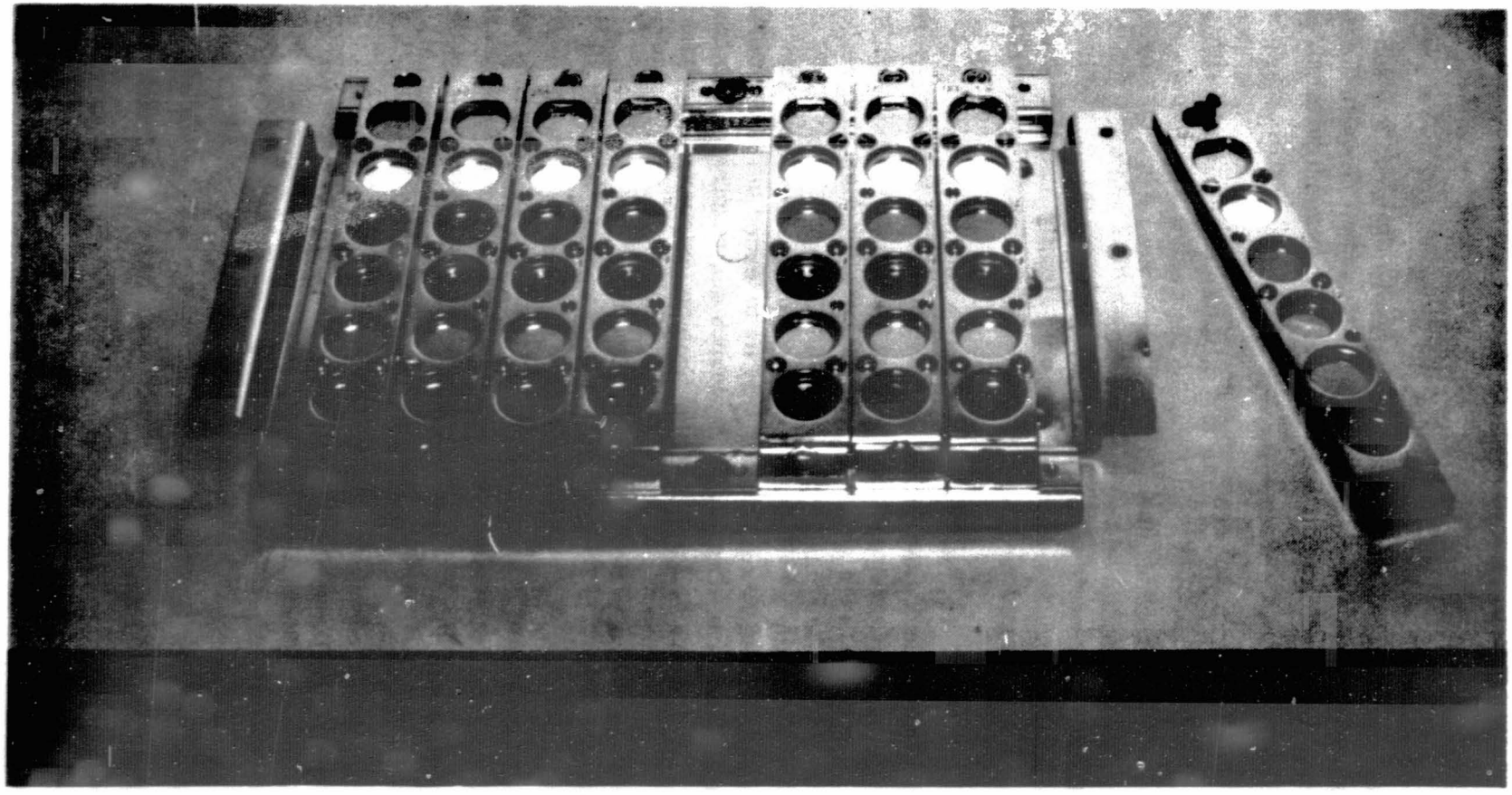

Figure VIII-1. Passive Sample Array assembled, one tray removed.

ORIGINAL PAGE IS
OF POOR QUALITY

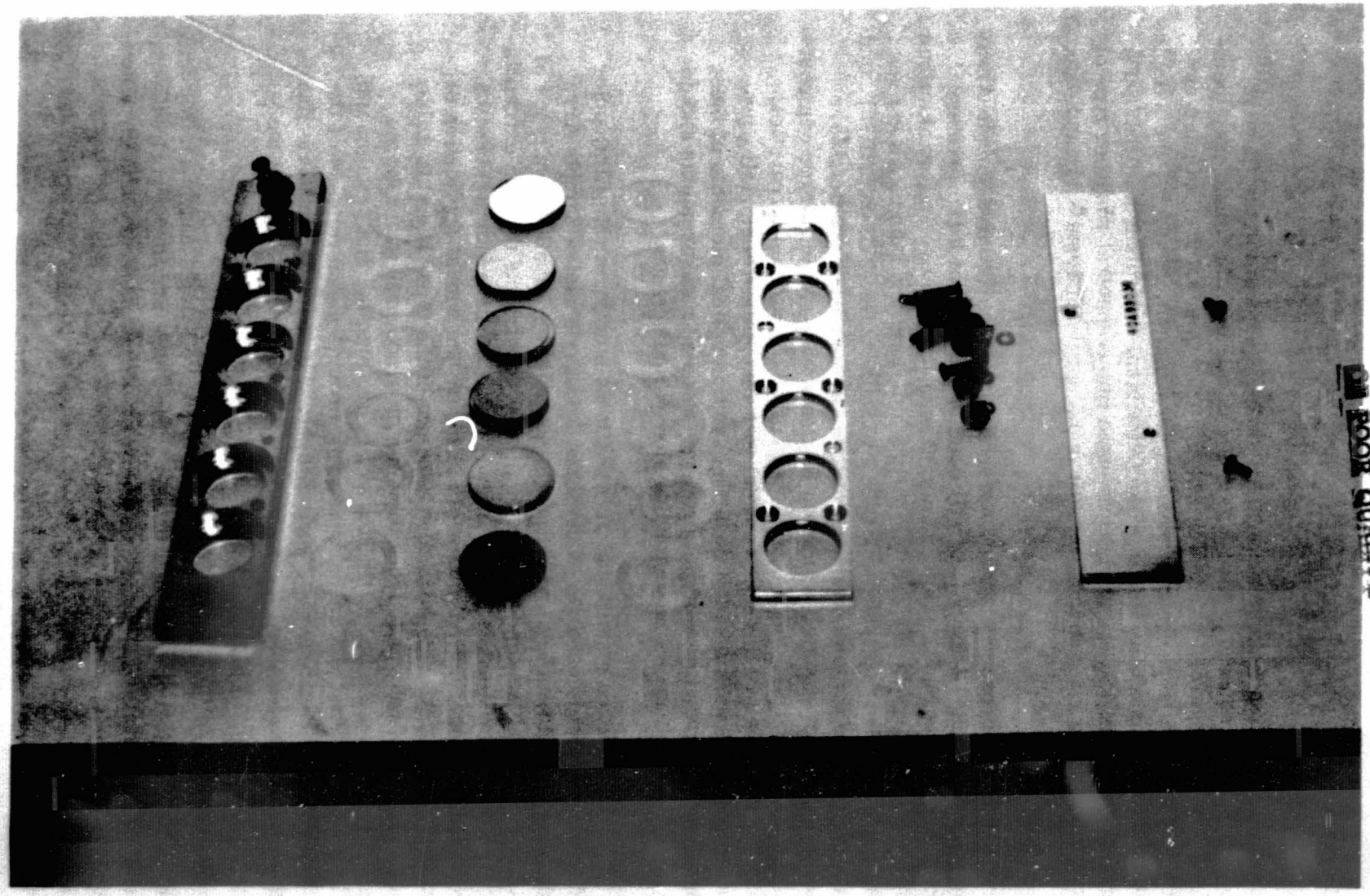

Figure VIII-2. Passive Sample Array tray disassembled.

ORIGINAL PAGE IS
OF POOR QUALITY

C. Instrument Characteristics

Sample Selection Rationale. Optical samples chosen for the Passive Sample Array were required to meet one basic constraint; they must not, themselves, be potential sources of contamination. This constraint eliminates consideration of many thermal control coatings, for example. Largely, the samples have been chosen for stability to the projected natural environment of the Space Transportation System (STS), for performance in the spectral range or type of measurement planned for analysis, and for applicability of results to candidate optical materials for future STS payloads.

The samples presently planned for inclusion in the Passive Sample Array are given in Table VIII-1. Each tray will contain one each of three primary mirrors selected: platinum, gold, and magnesium fluoride overcoated aluminum. Platinum and gold mirrors are exceptionally stable to natural degradation over periods of years. Their optical properties are well known [VIII-2, VIII-3], and their susceptibility to contamination, therefore, is somewhat predictable. Magnesium fluoride overcoated aluminum is also a very stable mirror composition, with the highest reflectance of any material in the vacuum ultraviolet. Telescope, spectrometer, and other optical instrumentation comprising projected and future STS payloads will doubtless contain optical elements of these three materials. Careful analysis of properly executed measurements should lead to meaningful extrapolation of results to such instruments.

If the encountered contamination deposits as a uniform thin film, prior knowledge of the optical constants of the three primary Passive Sample Array types of mirrors could lead to projections of degradation for all known types of reflecting and transmitting materials. Qualifying constraints on such extrapolation, however, render it necessary to include in the Passive Sample Array a more varied selection of optical materials to insure the widest application of results. Glasses and fluoride compound windows of the types listed in Table VIII-1 are commonly used as sources or detector windows in space-borne instrumentation. These transmitting materials are also the sample elements of the IECM Optical Effects Module, which will provide measurements of the optical properties of these samples during flight. The correlation of results from the two experiments provides a means of verifying and extending the results of both.

The remaining sample positions in the Passive Sample Array are for thin film filters on fluoride compound substrates for obvious ultraviolet applications, samples of the material used in the Shuttle crew compartment windshield, a new

TABLE VIII-1. PASSIVE SAMPLE ARRAY

Optical Samples to be Flown[a]			
Quantity	Dimensions	Substrate	Thin Film Coating
8	2.54 cm diameter, 0.32 cm thick	Fused Silica	Platinum (40 nm)
8	2.54 cm diameter, 0.32 cm thick	Fused Silica	Gold (50 nm)
8	2.54 cm diameter, 0.32 cm thick	Fused Silica	Aluminum (100 nm) over-coated with magnesium fluoride (25 nm)
4	2.54 cm diameter, 0.32 cm thick	Calcium fluoride	Uncoated
2	2.54 cm diameter, 0.32 cm thick	Beryllium	Uncoated
2	2.54 cm diameter, 0.32 cm thick	Fused silica	Iridium (35 nm)
4	2.54 cm diameter, 0.32 cm thick	Lithium fluoride	Uncoated
2	2.54 cm diameter, 0.32 cm thick	MACOR	Uncoated
2	2.54 cm diameter, 0.32 cm thick	Vacuum ultraviolet filters	
8	Variable	Guest samples, including super-polished glass, Teflon electrets, ATR crystal, and stainless steel	

a. Total of 48 optical samples 2.54 cm in diameter and 0.32 cm thick.

commercial glass-ceramic material (MACOR) offering extremely low-cost substrate possibilities, a stainless steel substrate for contaminant identification studies, and the guest sample positions, including thin-film beryllium for X-ray filtering.

D. Data and Data Analysis

Most of the measurements of Passive Sample Array component optics will be confined to the spectral range from 110 to 300 nm since most optical materials, with the exception of X-ray and cryogenic infrared optics, show very high sensitivity to contamination in this region. The central element of the system used to analyze samples is a Seya-Namioka monochromator (McPherson Model 235) with 0.5 m focal length. The light source is a Hinteregger gas discharge lamp isolated from the monochromator by a magnesium-fluoride window. The source of excitation is a regulated flow of 99.999 percent hydrogen controlled by a current-regulated dc power supply (McPherson Model 730) operated nominally at 1800 Vdc, 200 mA. The lamp is water and air cooled. The typical hydrogen spectrum obtained is shown in Figure VIII-3, indicating the presence of the molecular multilined spectrum of hydrogen in the vacuum ultraviolet followed by the stable continuum from approximately 170 nm (1700 Å) upward.

Optical measurements of specular reflectance and transmittance are performed in the device mounted at the exit slit of the monochromator. This facility incorporates modifications to an existing reflectometer which allow five samples to be measured simultaneously. A schematic of the reflectometer arrangement is shown in Figure VIII-4. The incident light beam from the monochromator, after passing the bilaterally adjustable slits, can impinge directly on the rotatable light pipe through an empty position in the sample holder. Sodium salicylate, which fluoresces green in proportion to the intensity of ultraviolet light, covers the viewing element of the light pipe. The beam diameter is adjusted to approximately 1 cm^2. Light pipe fluorescence is detected by an EMI 2638 photomultiplier operated nominally at 700 Vdc. The circular sample holder, with six sample depressions, is mounted for axial rotation at an angle of 30 deg from the incident beam. Following calibration at a wavelength, with the light pipe at 0 deg and the empty sample position passing the incident beam, the light pipe is rotated to the position of specular reflectance and the sample holder rotated through the five mounted samples for recording of near-normal incidence specular reflectance. Transmission is measured similarly with the light pipe left in the 0 deg position.

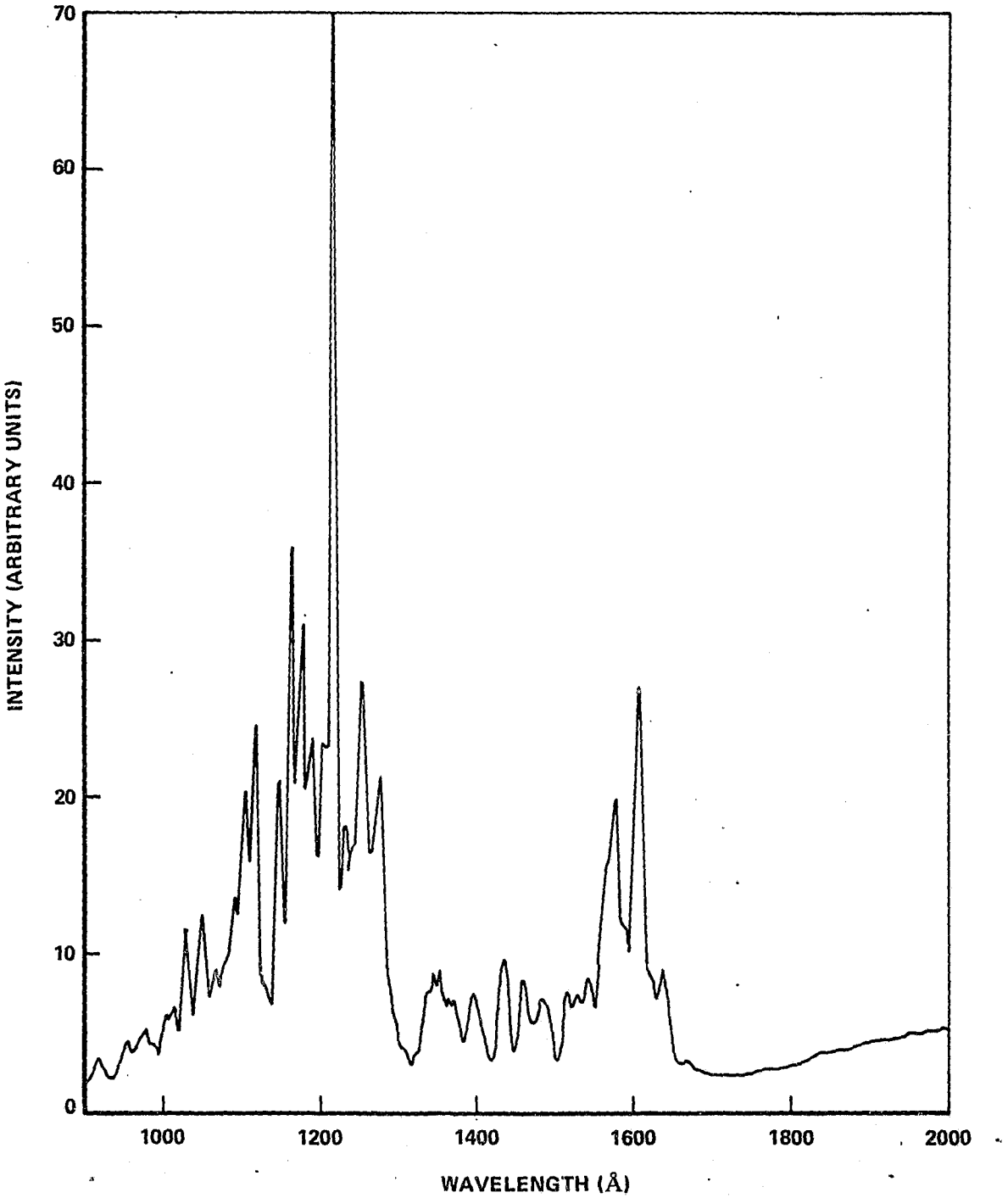

Figure VIII-3. Lamp spectrum with hydrogen gas.

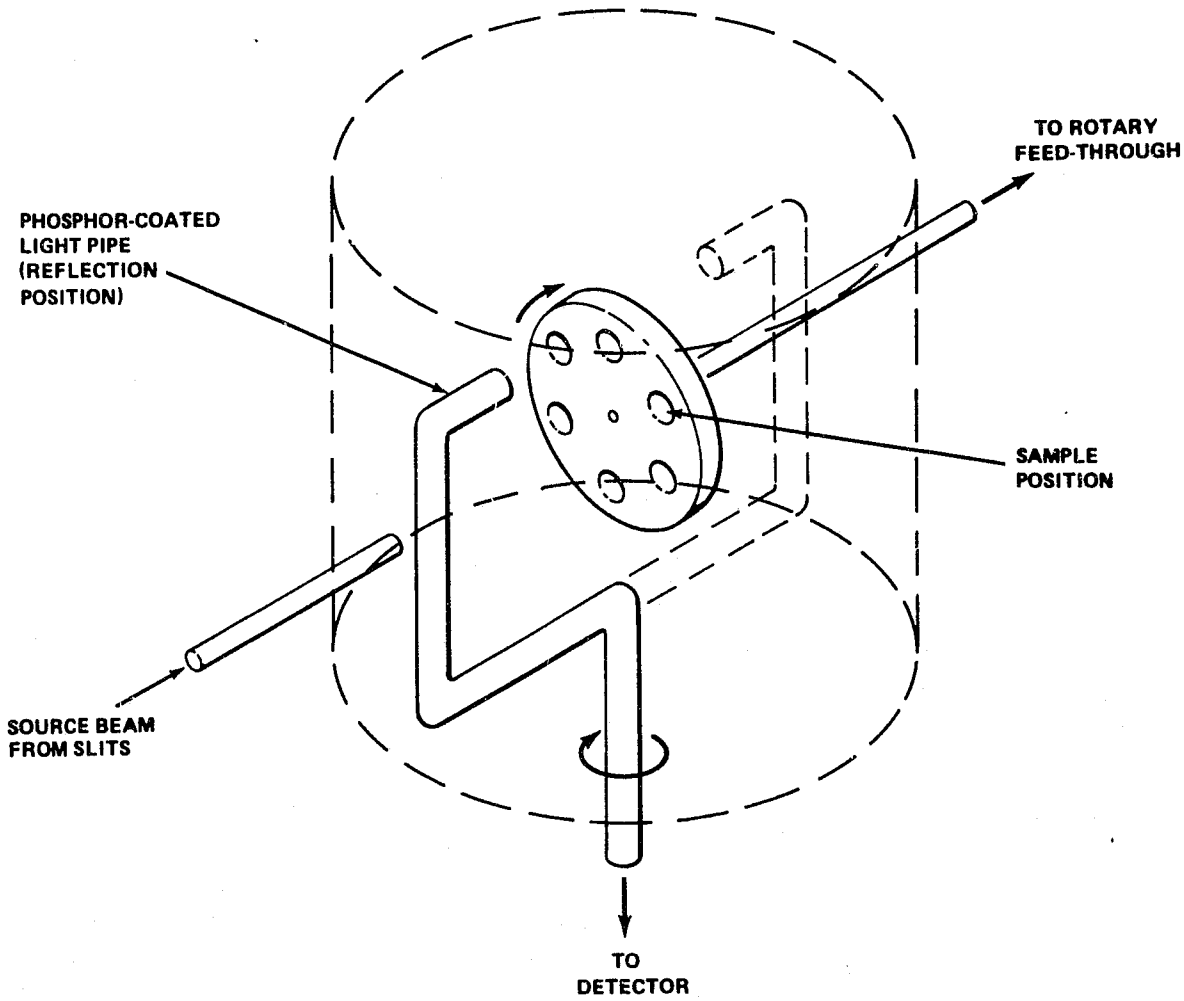

Figure VIII-4. Reflectometer schematic.

The measuring facility, with the exception of the closed-loop lamp, is maintained oil-free for use at a pressure level of 10^{-5} N/m^2 (10^{-7} torr) by a 250 liter/s ion pump; roughing is accomplished by a cryosorption pump unit. Dry nitrogen backfilling is employed for venting the system.

Optical samples are subjected to specular, spectral reflectance, and transmittance measurements before and after each Shuttle mission. It is a straightforward procedure, therefore, to calculate $\Delta R/R$ and $\Delta T/T$ for a given wavelength from the ratio of the difference of the two measurements to the initial value, expressed as a percentage. This percentage is an effective parameter for evaluating the relative significance of any observed changes in the optical characteristics of exposed samples.

Some of the measured samples will be extracted from flight-designated batches and stored in a "clean" environment as controls. The "clean" environment refers to a Class 10 000 laminar flow bench on which the control samples will be stored in covered Pyrex containers. Post-flight measurements will be corrected, if necessary, based on the analysis of the control samples.

Since the optical properties of materials in the vacuum ultraviolet are subject to dependencies on substrate characteristics, thin film preparation conditions, and many other factors, statistical averaging of the results of the Passive Sample Array will be supported by including in each array as many samples of identical preparation batches as possible. The geometry of the array is such that the exposure to the space environment should be nearly identical for all samples. The degradation to be encountered by optical surfaces in the Shuttle environment should be predictable from a cursory review of the relative percent change in optical reflectance or transmittance observed. The extrapolation necessary to evaluate the relative susceptibility of components of future Spacelab experiments, for example, based on the statistical averaging of results, is more involved because it is unlikely that such future components would suffer the extremes of thermal drift or direct exposure to which the candidate elements of the Passive Sample Array will be subjected. The results will enable determination of the "worst" to be expected and will enable evaluation of some of the spectral consequences of deposition of contaminants. The relative susceptibility of various generic optical materials can also be studied because, while the effects of exposure to the natural environment of space are reasonably predictable for most (not all) vacuum-ultraviolet grade optical materials, similar extrapolation for the induced environment of space is most difficult. The range of materials included as samples in the Passive Sample Array facilitates this evaluation.

The significance of deposited contamination is dependent on the function of the affected optic. If the contamination absorbs little in the utilized spectral range of the optic, little harm may be done. If the deposited contamination contains particulates, however, the effects on imaging characteristics of the subject optic may be severe. It is, therefore, essential in the analysis of the samples in the Passive Sample Array that attention be directed to discrimination of any particulate species in the deposits. While the major emphasis in the development and projected analysis of the array has been directed toward degradation due to absorption, planning has included some analysis which will aid in the evaluation of particulates. In particular, visual inspection and microphotography will be employed on all samples for initial characterization of the nature of contamination observed. At least one sample of each tray will be subjected to measurements of bidirectional reflectance on a designated facility before and

after each flight. At least eight mirrors will also undergo measurement of hemispherical reflectance in the range 0.2 to 2.5 μ using an integrating sphere in conjunction with a Beckman DK-Z spectrometer. In the region of spectral overlap (0.2 to 0.3 μ), the comparison of the specular and hemispherical reflectance measurements offers yet another basis for evaluating the deposition characteristics.

Because the Passive Sample Array is only one component of the IECM, it is essential that the results of the array be correlated with applicable data from the other contamination monitors. The Optical Effects Module offers data of a similar nature obtained in near real time. By including identical samples in each instrument, the data of the Optical Effects Module should indicate what phases of the mission led to deposition and, in particular, help to assess the effects of launch and reentry on the samples. The Passive Sample Array provides the means of intensive analysis of the deposition required for effective evaluation of the hazards of Shuttle environment contamination, while the Optical Effects Module provides the capability of assessing when the deposition occurs as well as its significance and nature (whether film or particulate), so that the source of the contamination may be ascertained by careful study of the time history of events and processes during the mission likely to lead to evolvement of contaminants.

The Passive Sample Array provides the opportunity to evaluate, by means of post-flight analysis, the chemical identity of contaminants that adhere to optical samples. Provision has been made for limited tests of this nature in the Space Sciences Laboratory, Marshall Space Flight Center, including Auger analysis to identify the elemental constituents and subjection to heating in a facility monitored by a mass spectrometer. Also, some interest has been expressed in flying, as a guest experiment, a single ATR crystal for such purposes.

REFERENCES

VIII-1. ATM Ground Support Equipment Requirements. Document 50M04954, Revision B, Marshall Space Flight Center, October, 1971.

VIII-2. Hass, Ramsay, and Hunter: Reflectance of Semitransparent Platinum Films on Various Substrates in the Vacuum Ultraviolet. Applied Optics, vol. 8, No. 11, November, 1969.

VIII-3. Sampson, J. A. R.: Techniques of Vacuum Ultraviolet Spectroscopy. John Wiley & Sons, New York, 1967, pp. 34-42.

INSTRUMENT SPECIFICATION SUMMARY
PASSIVE SAMPLE ARRAY

Physical Characteristics:

Weight — 4.5 kg
Dimensions — 33.3 × 22.2 × 2 cm

Power Requirements: None

Performance Data:

Data output — passive samples for laboratory analysis

IX. OPTICAL EFFECTS MODULE (IECM06)

Roger C. Linton

A. Objective

The Optical Effects Module of the Induced Environment Contamination Monitor (IECM) is designed to provide the Shuttle cargo bay user community information applicable to assessing the contamination hazards likely to be encountered by optical components of space-borne instrumentation. The optical degradation of some typical window materials will be measured and monitored during prelaunch, orbital, and post-landing phases of the six Space Shuttle Orbital Flight Tests (OFT's) and the extended mission of the Long Duration Exposure Facility (LDEF). Optical property changes due to deposition of particulates and molecular films will be discriminantly measured utilizing an integrated scattered light measurement in conjunction with direct, self-calibrating transmission measurements.

The Optical Effects Module consists of a light source, focusing and collecting intermediate optics, a rotatable sample carousel, and detectors. This unit is nominally monochromatic at 253.65 nm, determined by the choice of light source and the spectral sensitivity of the detectors. Initial design considerations involved a scanning monochromator with a deuterium source; while costs dictated the simpler monochromatic line source approach, the design is compatible with the addition of the scanning capability.

The IECM requirements for measuring optical degradation due to contamination entail an ability to measure a 1 percent change in absorbing or scattering characteristics. This requirement is interpreted as referring to the repeatability or precision of the instrument because it is the ability to repeat a measured value within the ±1 percent uncertainty that determines the validity of any observed change.

B. Instrument Description

The Optical Effects Module measures transmittance and scattering. The instrument was developed by Advanced Kinetics, Inc., of Costa Mesa, California. The schematic of Figure IX-1 is a side view of the flight unit. A nearly collimated

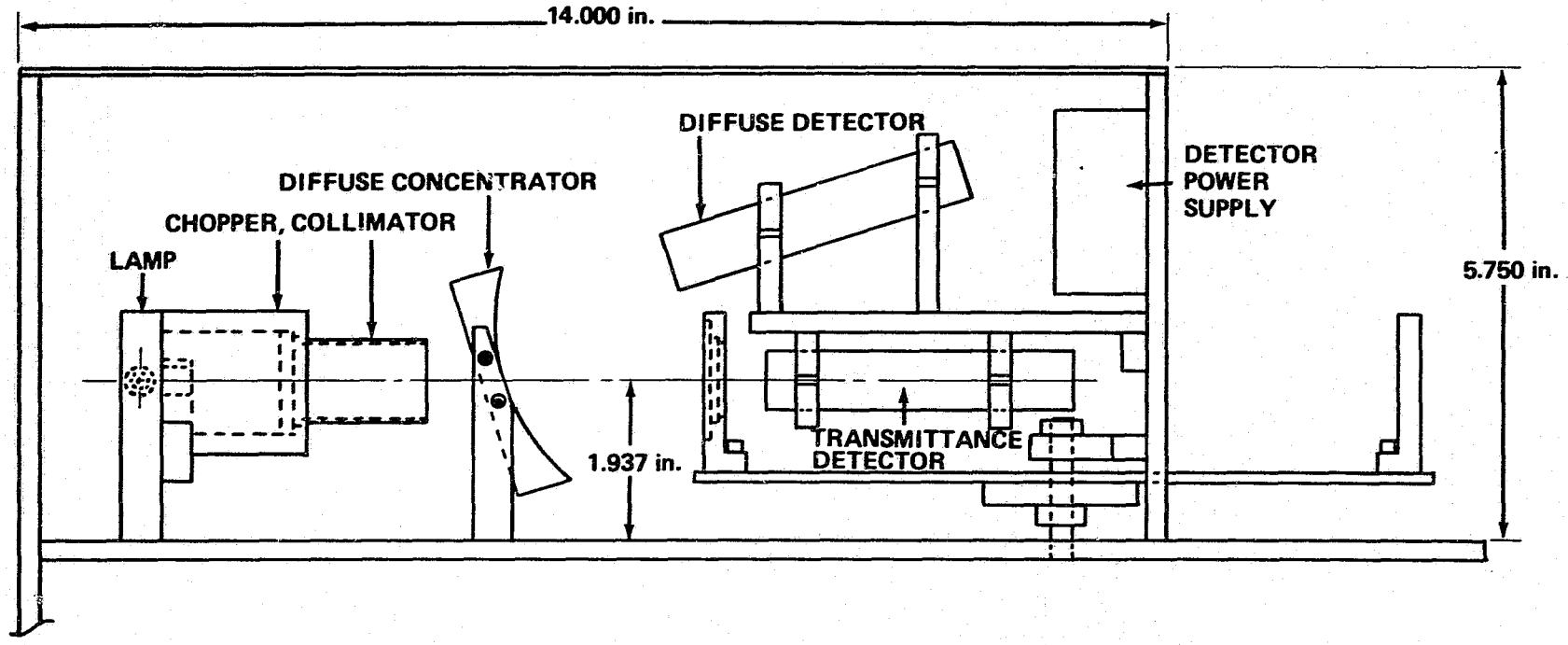

Figure IX-1. Optical system with reflecting mirror and photomultiplier.

beam of light from the mercury source is uniquely differentiated from any unwanted background illumination by passing through a Bulova tuning fork chopper vibrating at 200 Hz. This chopped beam continues through an aperture in a focusing mirror to provide, at the indicated measurement position of the carousel, a 1.9 cm diameter source. One of the sample positions on the carousel is left blank so that unobstructed total beam intensity can be measured by the photomultiplier fixed in location behind the sample measurement position. This intensity, I_0, is a calibration reference for all measurements. When the carousel rotates a filled sample position between the source and detector, the measured transmitted intensity, I_n, is ratioed to I_0 as an accurate measure of the transmittance.

The optical alignment inside the Optical Effects Module is designed to reject the specular component of reflection from the sample (with a half-cone angle of 10 deg). Should a sample on the carousel became contaminated in a manner giving rise to diffuse reflection or scattering, the focusing mirror is positioned to collect this type flux and to direct it to a second photomultiplier above the transmission detector for a measure of the scattered intensity I_s, similarly ratioed to I_0.

Therefore, in operation the Optical Effects Module is designed to sequentially rotate a set of previously exposed samples through the measurement position, the monitored output of the two photomultiplier detectors providing the only necessary data output for assessing the optical degradation (if any) suffered by the samples during the previous exposure interval. During this latter interval, the Optical Effects Module is mechanically inactive. Referring to Figure IX-2, which shows the carousel alignment during the exposure interval, it is seen that three samples are exposed simultaneously; two other similar samples are retained inside the Optical Effects Module housing with the empty sample holder for monitoring internal contamination.

The light source is a low-pressure, cold cathode, mercury vapor discharge lamp — a familiar line source for spectroscopic applications in the laboratory. Such lamps consist of a double-bore tubing of fused quartz for containing the active plasma which limits transmission of radiation to wavelenghts above the 180 nm fused quartz cutoff.

Mercury lamps produce the line spectra shown in Figure IX-3 in addition to vacuum ultraviolet lines [IX-1]. While all such lamps intrinsically emit all of these characteristic lines, a number of factors weighted primarily by the

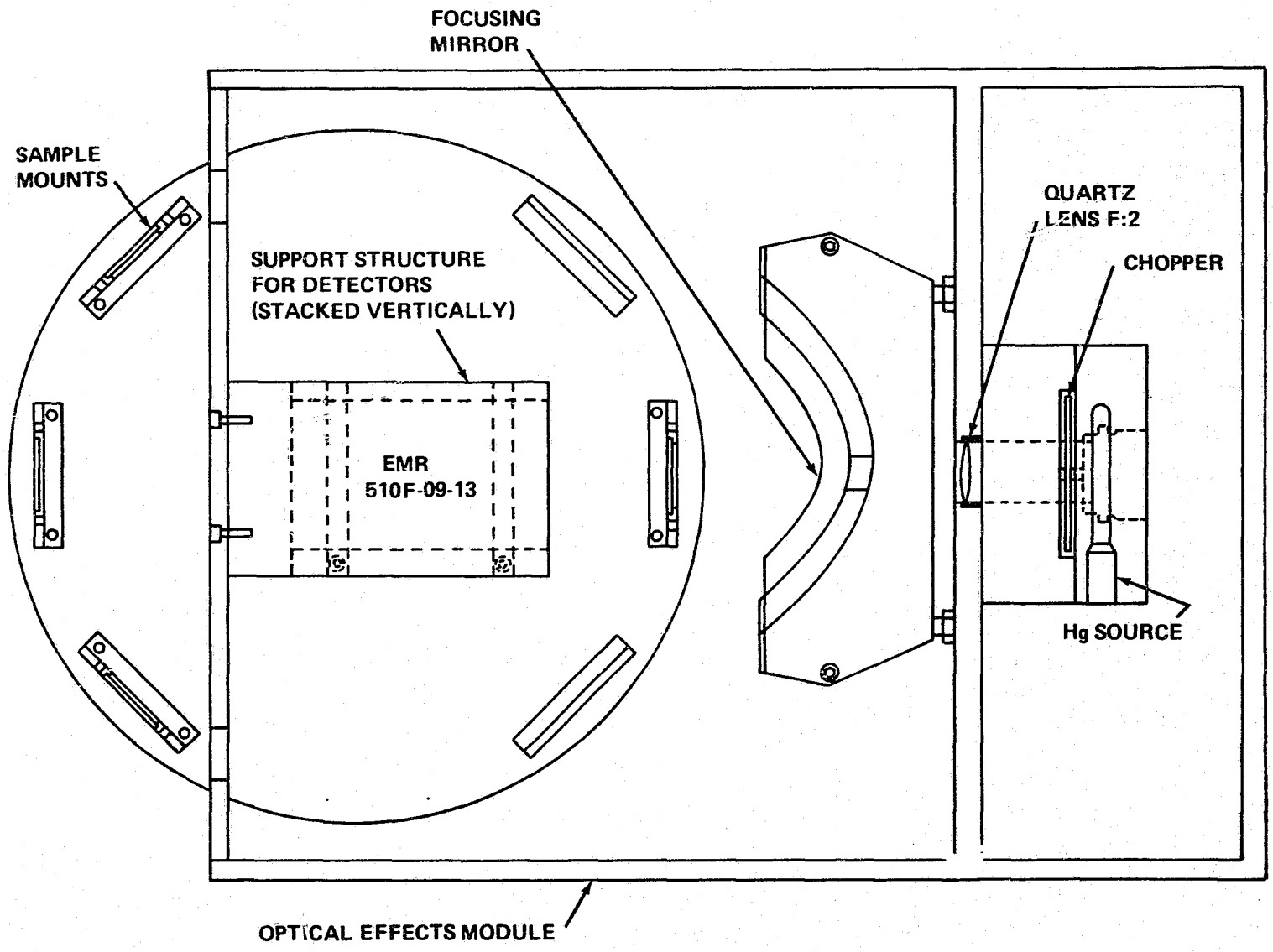

Figure IX-2. Optical Effects Module.

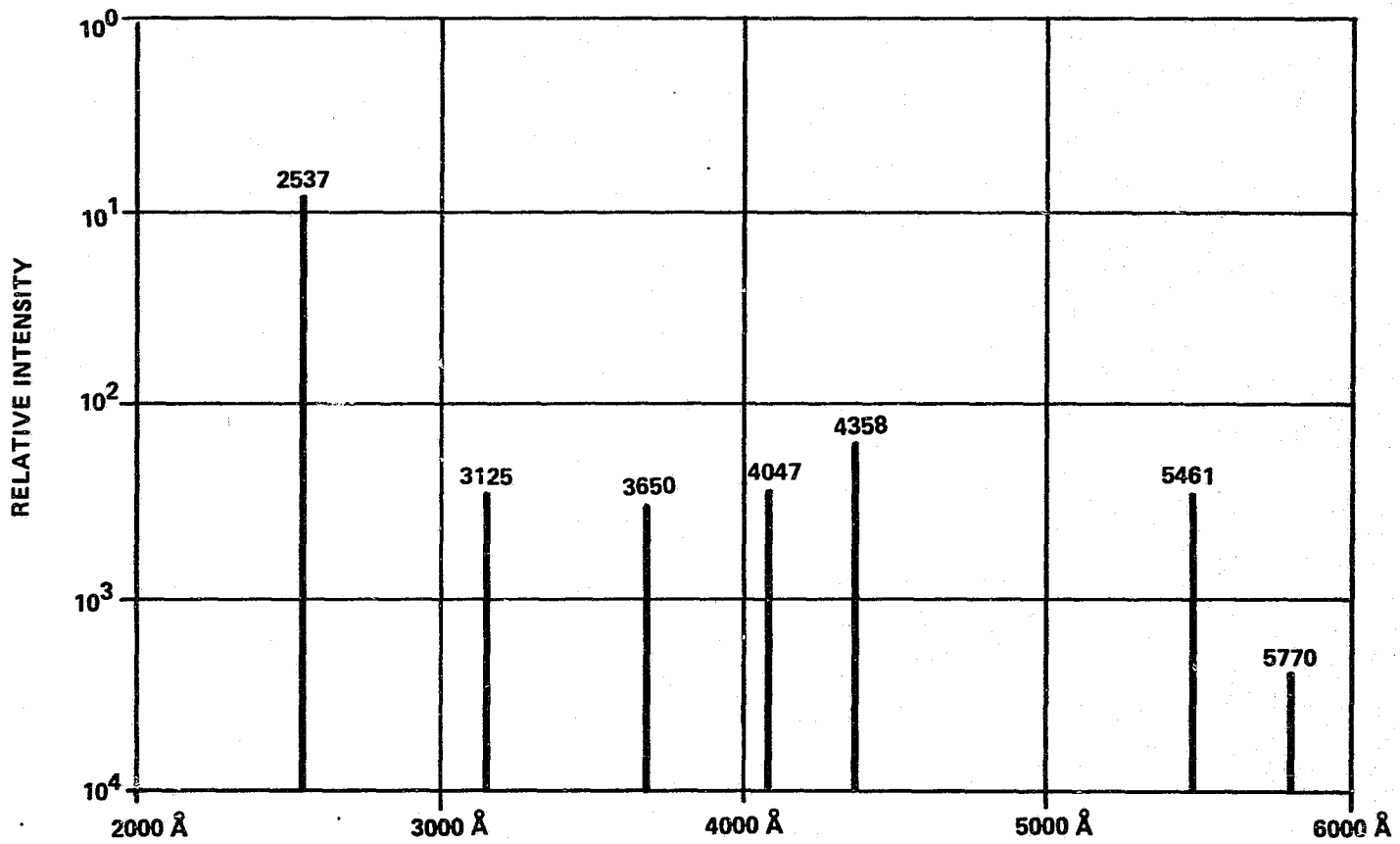

Figure IX-3. Mercury vapor discharge lamp spectra.

pressure of the mercury vapor limit the relative intensity of various lines with respect to others. In particular, mercury vapor discharges generate the resonance lines, defined by the transition from the lowest excited state to the ground state. Such emission is generally absorbed by neighboring atoms, which, when undisturbed, will reemit at the same frequency. If, however, the absorbing atom is further excited by some electron interaction, the reemission will differ from the resonance absorption. In a low-pressured vapor, the mean free path is increased, and the likelihood of resonant emission surviving is increased to the point where it dominates the spectral output of the lamp, emitting over 90 percent of its radiation at the 235.7 nm rsonance line.[1]

Specifically, the Optical Effects Module lamp is a Hamanatsu Model L937-001 with a 25 mm long plasma tube 6 mm in diameter. Normally, in the laboratory, this lamp is powered by an ac inductance transformer which provides a high voltage for starting the lamp, then reduces the voltage considerably for normal operation. In the development of the Optical Effects Module, it was initially proposed to power the lamp from a dc power supply with ballast resistor. Experiments have shown, however, that such operation reduces the lifetime of the lamp by factors of 2 or more. Alternative means of excitation were explored; the selected approach uses a dc-ac inverter with output well in excess of the maximum lamp starting voltage. A standard dc-ac inverter is used in conjunc- with a high-voltage step-up transformer attached to the output. This powers the resistive ballast and the lamp. The reduced power efficiency due to the required ballast resistor is more than compensated for by the stability characteristic of the induced lamp temperature range. The selected inverter is an Abbott SID-115A-1600. Lamp power supply specifications are detailed in Table IX-1.

All components and subsystems of the Optical Effects Module are housed in a single module enclosure divided into two equal compartments by a rigidizing plate which is secured to the base mount. The top compartment contains the optical elements, the source, and a portion of the sample wheel (the remainder of which is continually exposed to the external environment). The lower compartment houses the electronic subsystems, power supplies, and the stepping

1. The ratio of intensities of the lines at 235.7 nm and the ever-present 184.9 nm has been measured at MSFC and found to be 0.02 for this type lamp.

TABLE IX-1. OPTICAL EFFECTS MODULE LAMP POWER SUPPLY SPECIFICATIONS

Inverter
Input voltage — 24 to 30 Vdc
Input current — 0.79 A at 100% load
Waveform — Sinusoidal
Voltage adj. range — 12%, manually adj.
Output voltage — 108 to 122 Vac (rms)
Output current — 120 mA surge, 86 mA continuous
Weight — 0.77 kg
Transformer
Primary voltage — 115 Vac (rms); single phase, 1600 Hz
Secondary voltage — 850 Vac (rms)
Power — 5 VA
Limiting Resistor (Allen Bradley RCR42)
Value — 160 kΩ
Power dissipated — 4 W
Power rated — 16 W

motor for driving the sample wheel. While the lower compartment may appear a potential outgassing source during operation in a heated environment (it is not hermetically sealed), the likelihood of Optical Effects Module samples suffering contamination due to internally generated fluxes from the lower compartment is highly remote due to the exacting materials testing and selecting criteria employed in development and to the deliberately designed complexity of exit for evolving flux moleucles, should they arise.

The outer surfaces of this enclosure are designed to stabilize the thermal excursions of internal components and to reject heat primarily by conduction into the coupling thermal base plate of the IECM.

Modulation of the light beam is provided by a Bulova tuning fork chopper driven at 200 Hz. Since the output of the dc-ac inverter which powers the Optical Effects Module lamp is 115 Vac at 1600 Hz, a single chopper cycle envelope will

contain approximately eight lamp current modulation cycles. The chopper provides a synchronous signal for lock-in amplification. An isolation transformer decouples the 28 Vdc chopper power ground from the signal ground, as in all ground loops of the Optical Effects Module and, in fact, all IECM instruments. The Bulova chopper, with integral driver, consumes 500 mW of input power. Optical Effects Module circuitry drives the chopper when the lamp is "on" because the chopper and the lamp have transient characteristics during warmup (minutes for the lamp, seconds for the chopper). Frequency stability is 100 ppm, with a temperature coefficient of 50 ppm/°C. The chopper also provides a 5 V reference signal to the lock-in amplifier.

1. Sample Wheel, Holder, Rotary Drive. The sampler holder subsystem features a carousel configuration with six sample positions. The wheel of the carousel is an aluminum disc of 220 mm diameter and 3 mm thickness fastened to a spindle which is supported on three axial bearings (M_oS_2 lubricant). The sample wheel is driven at 90 deg to the axial drive shaft by means of a worm gear assembly.

A stepping motor is securely fastened by means of a 90 deg bracket to the underside of the optical plate. This motor will provide positive displacement of the wheel, featuring a stepping increment of 7.5 deg. It requires 0.5 s to index to each subsequent sample position (60 deg apart) in 100 drive steps. The worm gear (12.5:1 ratio) is adopted to generate a natural detent to prevent slippage of the sample wheel during the power-off cycle.

A photodetection-light emitting diode (LED) combination is used for generating location information and interfacing the processing electronics.

Samples for the Optical Effects Module will include a variety of optical window and substrate materials. Six sample positions are provided, three external and three internal. One empty sample holder is provided for detector reception of unobstructed beam intensity for normalizing subsequent readings from filled sample positions.

The samples are 2.54 cm diameter, 3 mm thick, polished optical flats. Sample type, surface finish, and other pertinent sample characteristics can be determined or changed at any one of several scheduled access intervals for the IECM flight units, including post-flight refurbishment prior to each flight subsequent to the first. In general, however, selected samples include highly

polished ($\lambda/10$ at Na_D) flats of the vacuum ultraviolet fluoride window materials such as CaF_2, MgF_2, and BaF_2. Such window materials are common to many optical subsystems of past, present, and future space instrumentation payloads, so that, with such samples, the results of Optical Effects Module analysis will have more direct applicability.

It is important to reiterate that the enclosure design of the Optical Effects Module is such that only three sample positions of the carousel are exposed to the external environment at one time. The three internal positions contain the empty, normalizing sample holder, so that two samples are kept inside for most of the time of Optical Effects Module operation, exiting briefly only during the "measurement" phase of operation. Since in-orbit power conservation, as reflected in the average power consumption of the Optical Effects Module, dictated a 7 min power-off cycle between each 77 s measurement (full power-on) cycle, the two internal samples will have minimal exposure to the external environment of potential contaminating fluxes; consequently, their performance will generally reflect the degree, if any, of self-contamination of the Optical Effects Module. It is necessary to qualify such analysis as "generally reflecting" such a state because it is certainly possible, and even likely, that some contamination can "work" its way into the restricted, though not sealed, carousel aperture (baffled) and contribute to observed changes of the samples maintained internal to the enclosure in the power-off phase.

2. Photomultiplier Detectors. The radiant emission of the mercury lamp, chopped, collimated, and passed with or without attenuation through the sample holders is detected by a solar-blind, ultraviolet-sensitive, end-on photomultiplier. Scattered light from contaminated samples is collected by an intermediate reflector and focused to a second, nearly identical photomultiplier above the first. The two detectors are matched closely in spectral response and quantum efficiency to facilitate intercomparison of results. The transmission detector is operated at a nominal -1000 Vdc at a current amplification factor of 10^3, while the scattering detector is operated at -1500 Vdc with 2×10^5 current amplification. These photomultipliers are the EMR, Inc., Model 510F-09-13 type, magnesium fluoride window, with a single power supply (EMR 640E-1) for both.

The photomultipliers are mounted stationary within the sample wheel assembly so that they can observe the transmittance of the samples, the open aperture, and the diffusely reflected (scattered) signals unperturbed. Each detector output is coupled via shielded leads to a low noise amplifier input stage. The signals are then processed by a dual lock-in amplifier system that provides dual 0 to 5 Vdc analog output signals.

3. Electronics and Signal Processing. The Optical Effects Module contains all the circuitry necessary to drive the sample wheel in a predetermined time cycle, to sense positions, to stop at each sample for measurements, and to complete the sequence. The signals are processed by synchronous lock-in amplification, and the rectified rms levels are made available for recording by the IECM data system.

All of the electrical power required for these functions (and also for energizing the lamp and chopper) is derived from the input IECM power line (28 Vdc) by inverter packages. All such components are heat-sunk in the lower compartment of the Optical Effects Module.

The dual lock-in amplifier processes the photomultiplier signals using the Bulova chopper 5 V signal as the reference for demodulation. Low-noise, low-drift amplifiers are used to provide stable performance over the operational temperature range 0 to 70°C. The reference signal from the Bulova chopper is decoupled from the 28 Vdc power ground by an isolation transformer. The reference input is filtered and bandpassed to achieve the fundamental chopping frequency to be phase shifted. This processed frequency is "squared up" by comparators (high gain) whose outputs drive the demodulator field effect transistor switches in each lock-in amplifier section.

The output is scaled from 0 to 5 Vdc to correspond to zero signal input and to the maximum signal intensity predicted, respectively. The outputs are averaged and buffered to provide a low output source impedance for the IECM signal processor.

4. Sequencer-Controller Electronics. The sequencer-controller performs all of the functions to properly correlate the sample wheel position and the signal being processed. The electronics for this function are almost all complementary metal oxide semiconductor (CMOS) for power conservation.

C. Instrument Operation

The operation of the sequencer-controller electronics can be discussed by referring to Figures IX-4 and IX-5. Two-position detectors (optical sensors) are used to detect the sample positions on the wheel. The open aperture (I_0) position is unique in that it has two small holes in the sample wheel corresponding to its position. All the other positions (I_1 through I_5) have only one hole

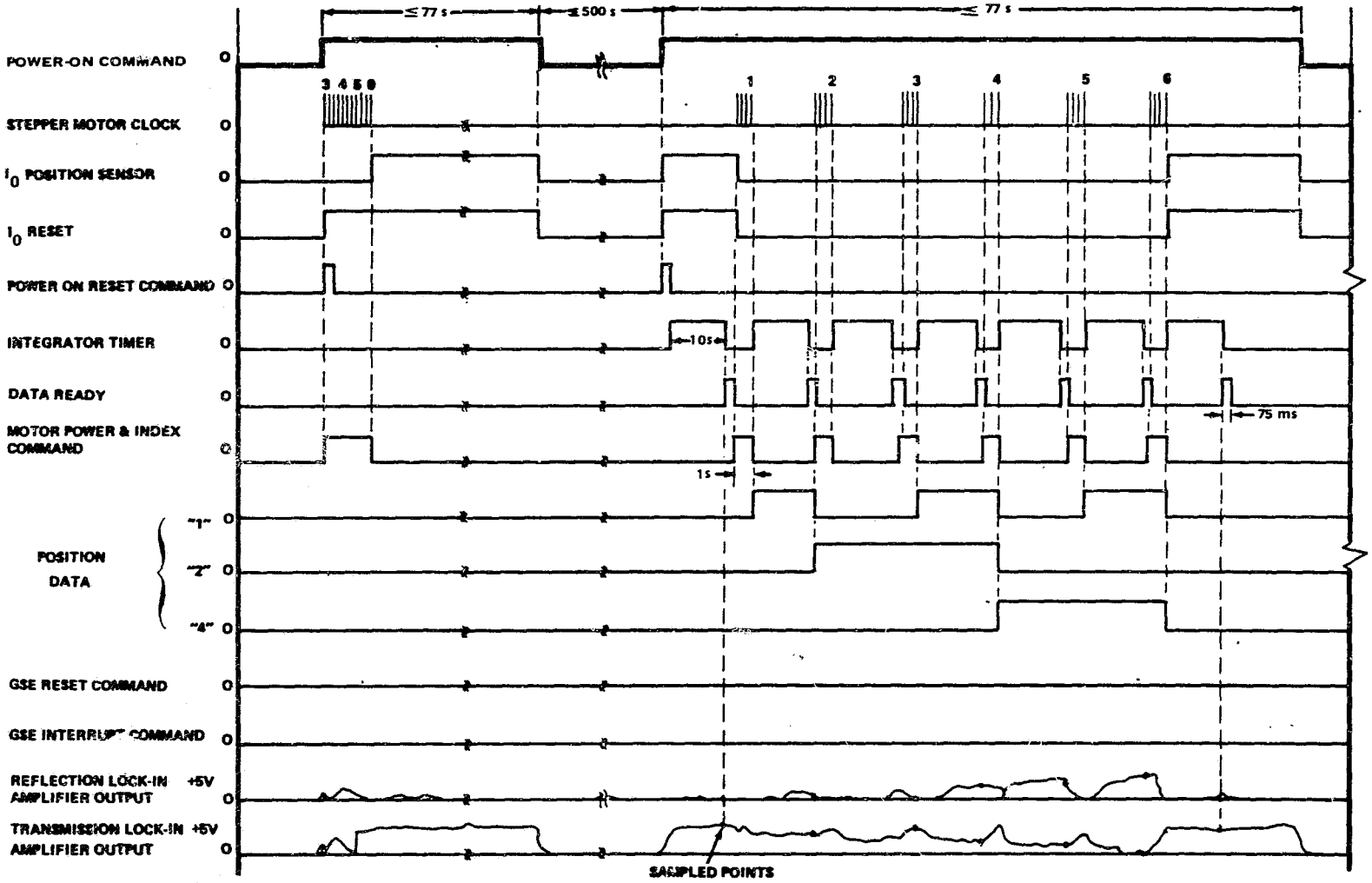

Figure IX-4. Optical Effects Module sequencer timing diagram.

ORIGINAL PAGE IS
OF POOR QUALITY

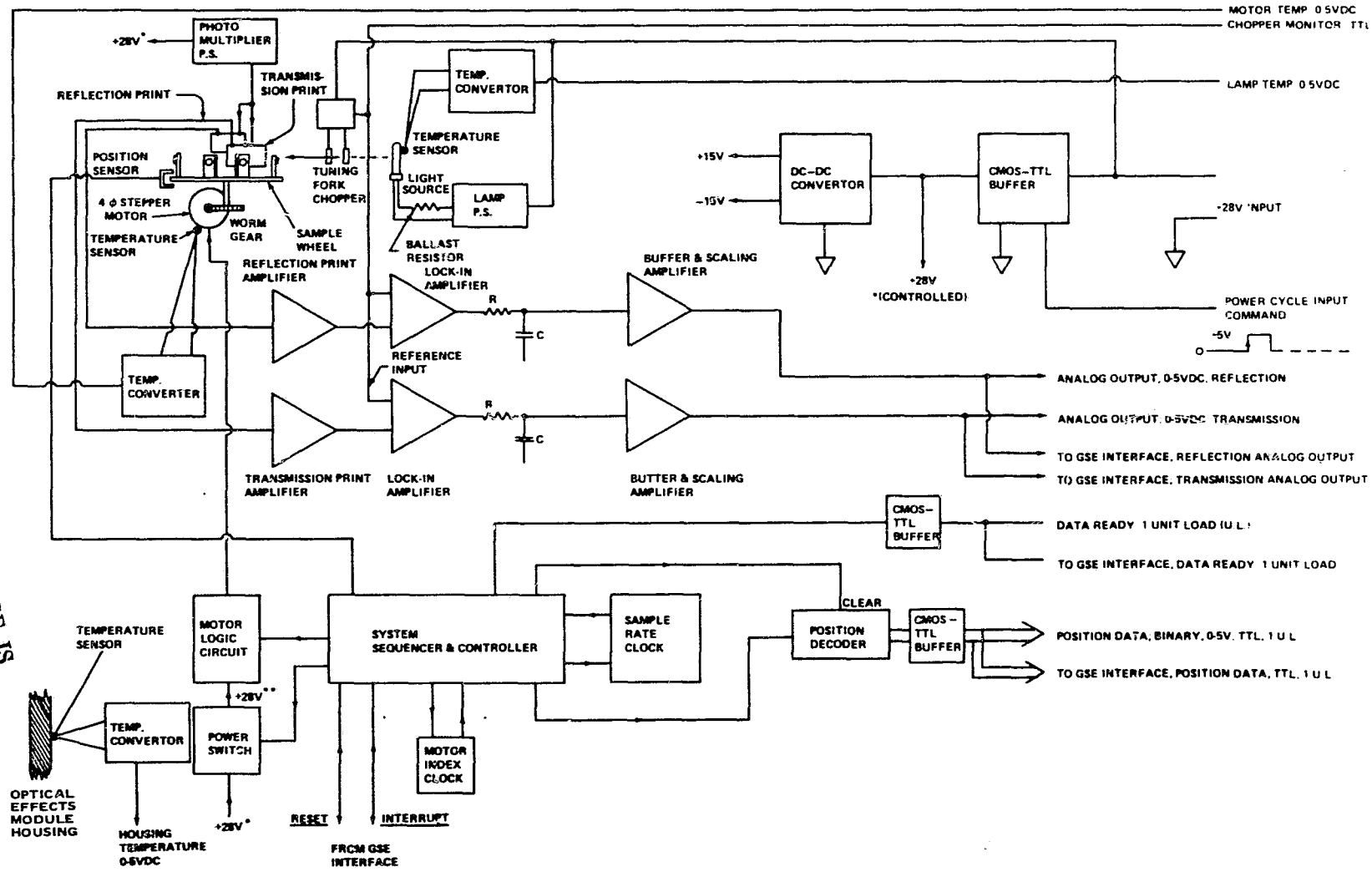

Figure IX-5. Optical Effects Module flight system block diagram.

ORIGINAL PAGE IS OF POOR QUALITY

associated with their positions. The circuit will reset the sample wheel to the I_0 position if it should not be in that position initially when the spacecraft's power-on command signal is given. Since the power-on command has a fixed time cycle, set at a minimum of 77 s on (and 429 s off), the sample wheel must return to the I_0 position before the end of the power cycle to avoid a reset command in the next power cycle. The output data will not be valid in the reset mode because the integration (dwell) time will be insufficient for accurate signal processing. The signals from the transmission and reflection photomultiplier tubes will be valid and accurately correlated to the correct sample position when the sample wheel starts initially in the I_0 position. The position data output is updated by a counter, and its output is buffered to drive two transistor-transistor logic (TTL) loads. However, since the ground service equipment interface requires a 1-unit load, the maximum loading allocated for the IECM will also be a 1-unit load when it is operational.

An integrating time cycle will be started initially at the power-on cycle for a duration of 10 s. During this time the I_0 signal will be processed. At the end of the 10 s integration time, a data-ready command will be generated to signal the IECM that the positional data and the transmission and reflection signal levels are valid. The data-ready pulse width will be at least 1 ms wide. The data-ready is TTL compatible with a 2-unit load capability. Like the position logic levels, one unit load is for the ground service equipment and one for the IECM. The data-ready pulse also initiates the command to step to the next position (I_1). The stepper motor power, as well as the index clock, is thus enabled to move the sample wheel. When the next sample position is sensed by the optical sensors, the stepper motor clock is stopped and the power is removed from the stepper motor itself to save power during the integration time. After the 10 s integration time, the data-ready pulse is generated again to allow the valid data to be transferred for processing. Again, a new index command is given to the stepper motor to move to the next position. This process is continued until the I_0 position is again reached. At this point the sample wheel will wait in the I_0 position even if the power-on command is substantially longer than the 66 s (minimum) allocated. The stepper motor will be off, and the electronics will await the new power-on command before starting a new integration/index cycle over one complete revolution incorporating all six sample positions.

The motor clock is set at approximately 100 kHz to allow the motor to index to the new position in 1 s. This will allow adequate speed-torque characteristics to reliably drive the sample wheel.

The Optical Effects Module requires 15 V, -15 V, and the incoming 28 Vdc for operation. The ±15 Vdc outputs are capable of supplying the rated load current which has been minimized by the CMOS logic and low power amplifier designs. The Optical Effects Module power profile is shown in Figure IX-6. The dc-dc converter specifications are given in Table IX-2.

A power switch is provided to interface with the control signal from the IECM. A 3.5 to 5 Vdc level will turn this switch on, thus powering the Optical Effects Module electronics, excepting the ultraviolet lamp and the Bulova chopper.

Three linear temperature bridges are incorporated for system diagnostic purposes. These three identical bridges incorporate a stable platinum sensor in one arm of a basic Wheatstone bridge. These sensors will be located near the ultraviolet lamp, the stepper motor, and a strategic point on the Optical Effects Module housing. The temperature range will be from 0 to 100°C. The bridge amplifier outputs will range from 0 to 5 Vdc, corresponding to the 0 and 100°C points, respectively. The output sensitivity will, therefore, be 50 mV/°C. The IECM may interrogate these outputs at the end of each power-on cycle to achieve some temperature profile of the Optical Effects Module system and its components.

D. Data and Data Analysis

Five optical samples are exposed for various periods throughout the flight. The recorded intensities, normalized to the unobstructed beam measurement, provide the data necessary to analyze contamination hazards to optical surfaces (Table IX-3).

Two channels of data (analog) are provided, accompanied by the requisite position encoding. Channel 1, the analog output from the transmitted intensity monitor, requires only normalization to the station "0" reading, the empty hole position, for absolute values of normal incidence transmittance at 253.7 nm. The Optical Effects Module is designed to operate fully only upon receipt of a power cycle input command (5 Vdc) at intervals of 7 min. Data for the two analog channels will be generated simultaneously in a period of 80 s and will consist of six analog readings, each preceded by 3 bits position indication and 1 bit data-ready. Power peaks during this 80 s data phase because the stepping motor actuates only in this interval of operation. Standby power must be provided at all times during launch, flight, and reentry to maintain power to the Optical Effects Module lamp.

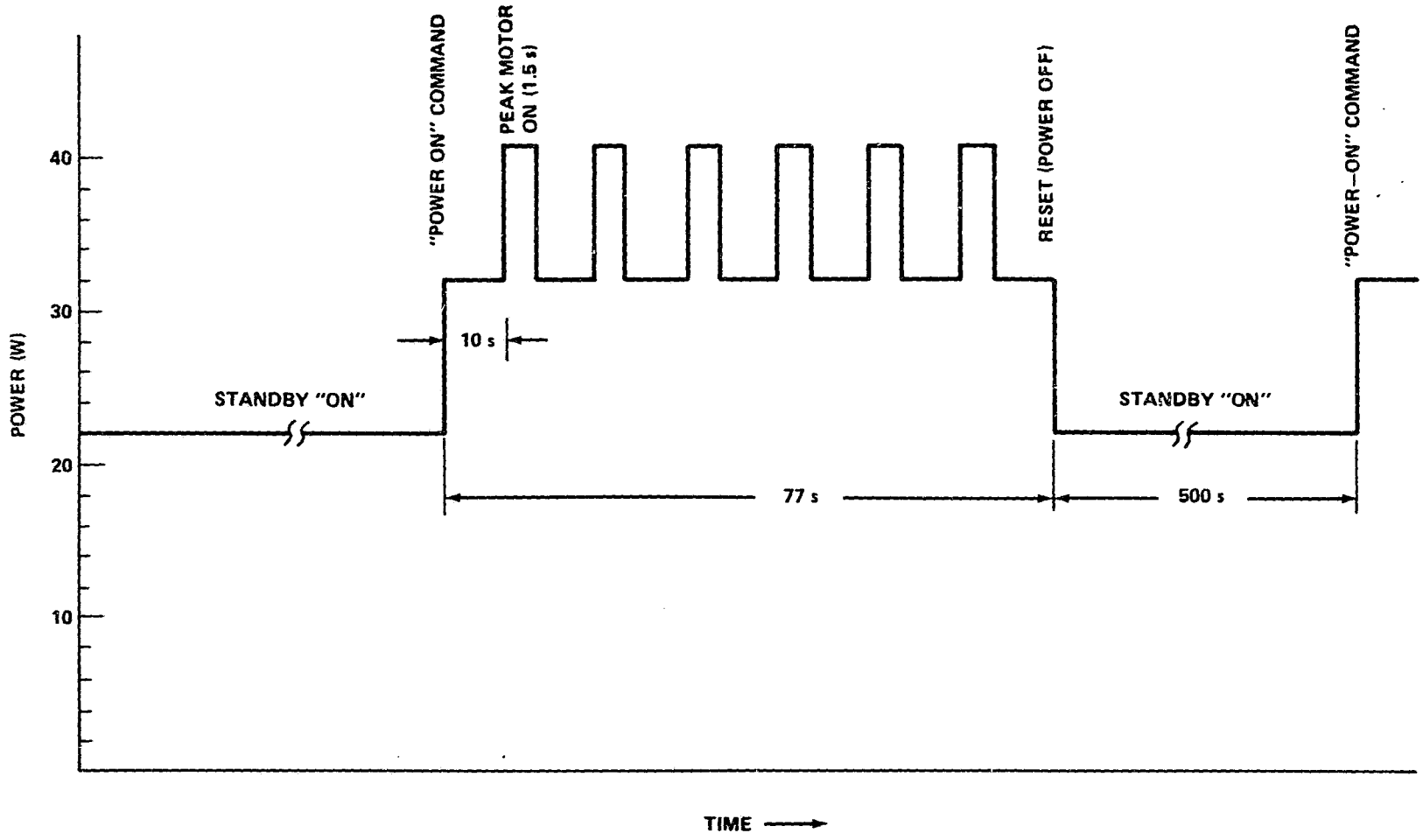

Figure IX-6. Power profile of Optical Effects Module.

TABLE IX-2. dc-dc CONVERTER SPECIFICATIONS

Input Voltage:	+28 Vdc ±3 Vdc continuous +50 Vdc for 1 s maximum
Output Voltage:	+15 Vdc and -15 Vdc (nominal)
Output Current:	±100 mA
Output Ripple:	90 mV (p-p) maximum
Line Regulation (V_i = 25 - 31 Vdc):	60 mV typical 90 mV maximum
Load Regulation (1/2 - full load):	350 mV typical 410 mV maximum
Temperature Regulation (-55 to 100°C Case):	200 mV (typical)
Protection:	Reverse polarity protected to 50 Vdc
Input Current:	38 mA (typical) for 100 mW load 210 mA (typical) for full load
Output Power:	3 W
Minimum Load:	100 mW
Output Voltage Adjust:	±10% full load -40% 1 W load
Isolation Test Conditions:	Input terminals shorted to case. Output terminals shorted together. 1000 Vdc applied from output to case.
Polarity:	Inputs and outputs are floating from each other.
Operating Temperature Range:	-55°C ambient to +100°C case
Storage Temperature Range:	-55°C to +150°C
Case Rise:	25°C (full load)
Operating Frequency:	3 kHz ±20%

TABLE IX-2. (Concluded)

Ripple Frequency:	6 kHz ±20%
Weight:	114 gm fully encapsulated
Environment:	Designed to meet the requirements of MIL-E-5400
Manufacturer:	Technetics
Power Supply Model:	9567-121

TABLE IX-3. OPTICAL EFFECTS MODULE TYPICAL DATA (STATISTICAL AVERAGES OF OPTICAL EFFECTS MODULE MEASUREMENTS ON THE SIX SAMPLES INCLUDED)

Station No.	Signal for PMV = 1000 V (mV)	Normalized Intensity	Signal for PMV = 1100 V (mV)	Normalized Intensity
I_0	22.20 ± 0.08 0.37%	1	61.3 ± 0.3 0.48%	1
I_1	19.71 ± 0.1 0.52%	0.888 ± 0.006 0.67%	54.1 ± 0.17 0.32%	0.882 ± 0.006 0.66%
I_2	11.90 ± 0.04 0.37%	0.536 ± 0.005 0.99%	32.46 ± 0.11 0.35%	0.530 ± 0.006 1.1%
I_3	13.62 ± 0.04 0.31%	0.614 ± 0.005 0.79%	37.1 ± 0.1 0.27%	0.605 ± 0.005 0.92%
I_4	11.88 ± 0.12 0.98%	0.535 ± 0.01 1.96%	32.6 ± 0.06 0.18%	0.532 ± 0.005 0.98%
I_5	19.86 ± 0.05 0.25%	0.894 ± 0.004 0.5%	54.63 ± 0.06 0.11%	0.891 ± 0.005 0.56%
I_6	5.36 ± 0.02 0.38%	0.241 ± 0.005 2.2%	14.23 ± 0.06 0.4%	0.232 ± 0.006 2.7%

Channel 2, the source of scattering data, provides an analog intensity level of the signal detected by the separate photomultiplier in the scatter position. For the station "0" reading, the scatter value should be zero. Discrepancies from zero are indications of internal contamination from surfaces other than the designated samples. The scatter data for the six sample positions is normalized in two ways: the inclusion of a reference diffuse sample of known scattering level, and reference to the station "0" reading from channel 1. Prior to IECM integration, the two detectors will be carefully matched and calibrated against each other. Similar checks post-flight will minimize the significance of any encountered responsitivity changes.

Post-flight evaluation of the Optical Effects Module data requires, initially, only time-related plots of the analog signal levels for each sample position in each data channel. For ease in interpretation, it is required that the plots be generated in Huntsville Operations Support Center (HOSC) normalized to the station "0" reading. Additionally, since it is not the actual value of the transmittance or scattering coefficient which is of most concern in evaluating degradation but rather the percent change from the initial value, it is required that HOSC provide time-related plots of $\Delta T/T$ and $\Delta S/S$, where $\Delta T = T - T_0$ (T_0 being the initial uncontaminated value). Finally, HOSC will provide time-related plots of the raw intensity variation of the station "0" values. For each of these plots, it is required that they be plotted for daily integrated variation.

Examination of the time stability of the station "0" data will provide a quick means of assessing the performance of the Optical Effects Module as a repeatable measurement instrument. The accuracy or repeatability of the Optical Effects Module measurements is certainly dependent on the maintenance of an adequate signal-to-noise ratio. Furthermore, unusually large fluctuations in lamp intensity, registered by the station "0" readings, require extrapolation of the normalizing intensity and can lead to error.

Quick-look analysis of the data will reveal the total degradation suffered by each of the samples. As a result of the configuration of the Optical Effects Module, some samples will be exposed to the external environment longer than others; it will be necessary to take this into account.

Time-related plots of $\Delta T/T$ and $\Delta S/S$ for each sample provide a means of attempting correlation with specific Shuttle functions such as plume generation, for example, and with the results of other IECM instruments. In particular, the results from the Passive Sample Array will have direct bearing on Optical Effects Module data evaluation since the Passive Sample Array contains samples identical to those of the Optical Effects Module.

INSTRUMENT SPECIFICATION SUMMARY
OPTICAL EFFECTS MODULE

Physical Characteristics:

Weight —

Sensor —	12.2
Electronics —	____
Total	12.2

Dimensions —

Sensor — 45.7 × 28 × 25.4 cm

Power Requirements:

Data mode — 41 W
Standby mode — 25 W

Performance Data:

Data output —
Sample rates — ~8.3 min/cycle (see discussion in text)
Resolution — 0 to 5 V, 40 mV
Accuracy — 1%

X. TEMPERATURE-CONTROLLED QUARTZ CRYSTAL MICROBALANCE (IECM07)

James A. Fountain

A. Objective

The Temperature-Controlled Quartz Crystal Microbalance (TQCM) is designed to detect the adsorption or desorption of molecular contamination in the Shuttle cargo bay as a function of temperature. The contamination sources will be characterized as a function of direction and events. Contamination will also be grouped into categories according to desorption activation energies.

B. Instrument Description

The TQCM (Fig. X-1) was designed, developed, and manufactured by Faraday Laboratories, Inc., of LaJolla, California. The experiment is based on quartz crystal microbalance (QCM) technology which has been used as the basis of space flight experiments since 1961. The QCM is a mass measuring device which uses the principle of the piezoelectric effect in an oscillating quartz crystal. Mass deposited or removed from a crystal changes its frequency of oscillation. The frequency change which can be measured with extreme accuracy is directly proportional to the mass change. The principles of the method were developed by McKeown [X-1, X-2] in the United States and by Sauerbrey [X-3, X-4] in Europe. The first applications of QCM's were in thickness monitor gauges in vacuum metallic vapor deposition, thin film applications, and sputtering erosion measurements in space [X-5, X-6, X-7]. Investigators have more recently worked toward extending the method into the field of microweighing [X-8, X-9, X-10] and contamination measurements [X-11, X-12, X-13].

Crystalline quartz (SiO_2) is chosen as the detector material because it is piezoelectric and physically and chemically stable. Furthermore, its physical properties are well known from its wide use as an oscillator and frequency standard in communications. The success of its use in a mass measurement depends upon how well factors other than mass deposition which can cause frequency changes can be minimized. This is done by selecting the proper cut of the quartz crystal detector with respect to the crystalline structure. An AT

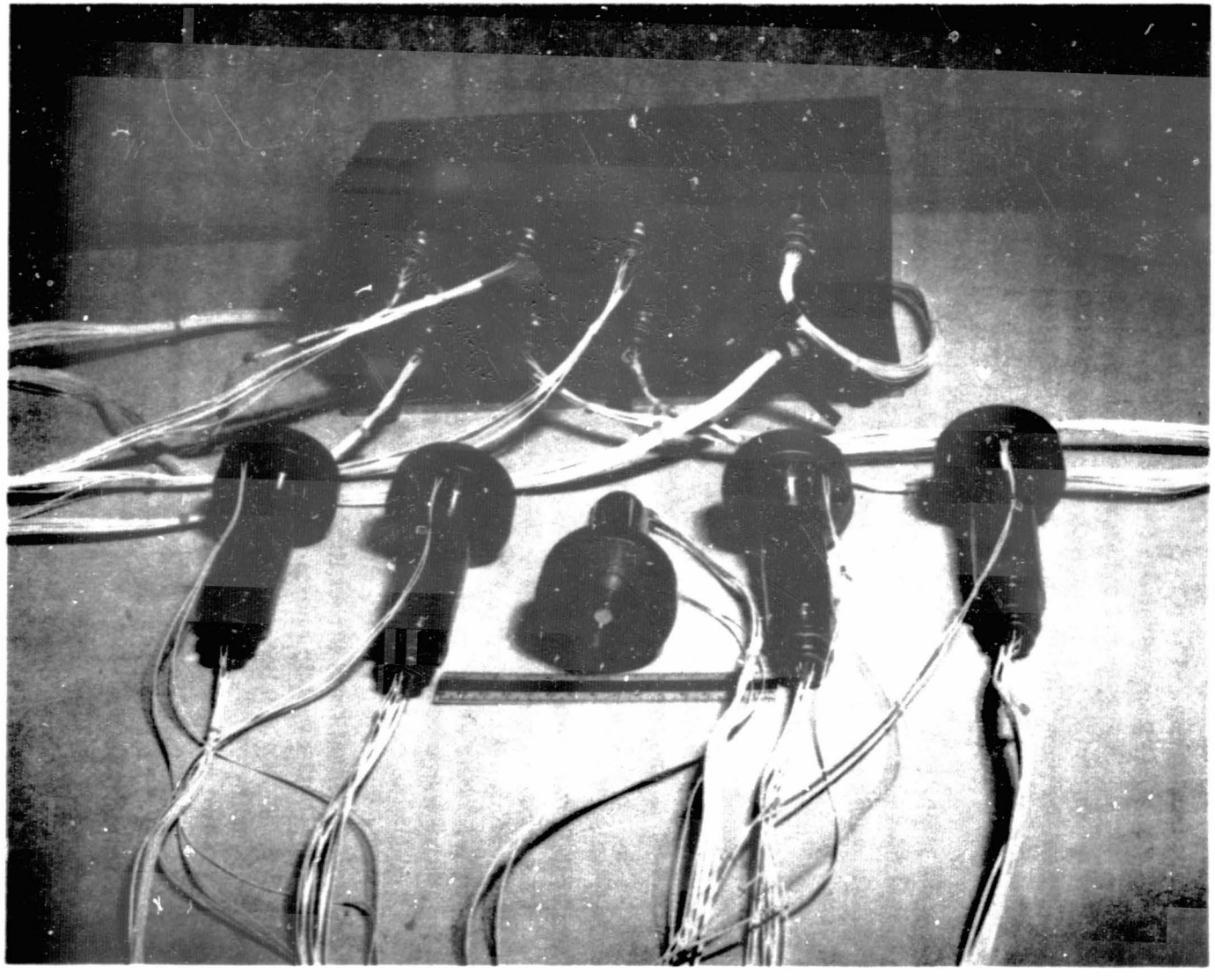

Figure X-1. TQCM system.

ORIGINAL PAGE IS
OF POOR QUALITY

cut is presently recognized as the optimum cut for a QCM. It is one in which the crystal is cut into a flat plate; that is, its diameter is on the order of fifty times its thickness. This cut is made so as to obtain the minimum temperature coefficient of frequency and low coefficient of internal friction, which combine to give good mass sensitivity. The AT-cut plate oscillates in the thickness-shear mode; i.e., the top and bottom surfaces of the plate vibrate transversely with respect to each other. Resonance is achieved by exciting the crystal with an electric field from an oscillator circuit with a frequency which matches the natural mechanical frequency of the crystal. Vapor-deposited metal films on each side of the quartz plate serve as electrodes through which the electric field is applied. Since the frequency of oscillation of a quartz plate is inversely proportional to the thickness of the plate, a layer of material which deposits uniformly on the surface causes a frequency change which is treated as an increase in the thickness of the quartz plate. The volume increase is then related to mass, with inaccuracy due to the fact that the physical properties of the added material will be different from those of quartz. The application of the QCM in the cargo bay environment in which the deposited material is unknown will rely on data analysis techniques and laboratory simulations in identifying types of contamination. Data will also be cross-correlated with data from the mass spectrometer, the nonvolatile residue (NVR) monitor in the Cascade Impactor experiment, and the Air Sampler. Post-flight surface photography and analysis of the crystal will also be performed.

The crystals used in the Induced Environment Contamination Monitor (IECM) QCM's operate at a resonant frequency of 15 MHz. The crystals and the vapor-deposited aluminum electrodes are coated with a protective layer of magnesium fluoride. The accuracy of the measurement is obtained in the following manner. Each sensor consists of two identical crystals. As shown in Figure X-2, the sensing crystal is directly exposed to the environment to be measured. A reference crystal is mounted directly behind the sensing crystal and is, therefore, shielded from direct line-of-sight from the molecular environment. Since both crystals operate at 15 MHz, the aluminum and magnesium fluoride coatings are applied in such a manner as to change the operating frequency of the sensing crystal to be approximately 1 kHz less than the reference crystal. The two frequencies are mixed electronically. Any deposition which lowers the frequency of the sensing crystal is measured as an increase in the beat frequency. This method cancels out errors due to changes in the system and electronic drift.

The equation for converting a frequency change into mass change is [X-11]

$$\Delta F = (\Delta m F_s^2/k\rho A) + F_s(T) - F_r(T)$$

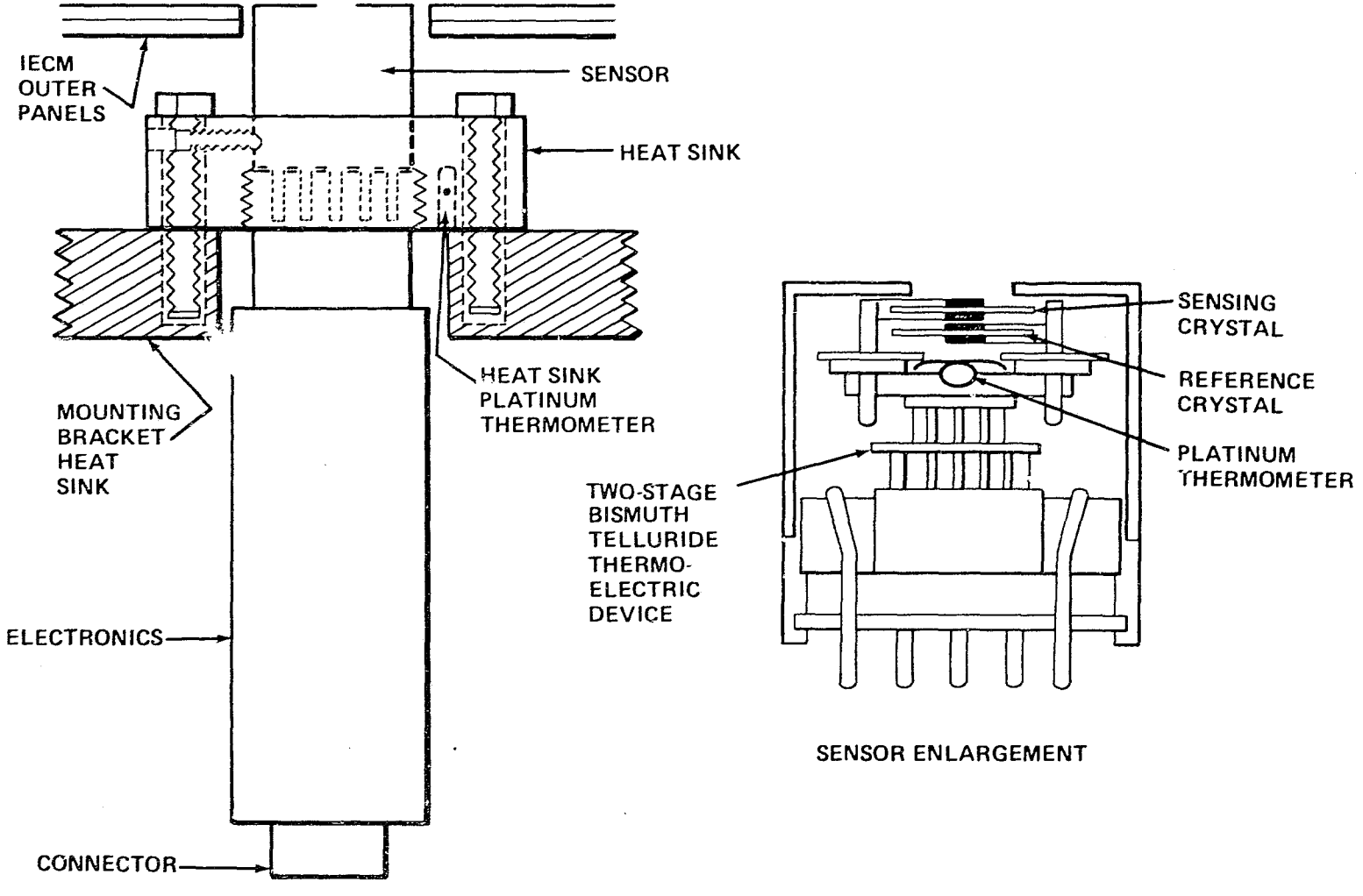

Figure X-2. Temperature-Controlled Quartz Crystal Microbalance (TQCM).

where

ΔF = frequency change (Hz)

Δm = change in mass (gm)

F_s = fundamental frequency of the crystal (Hz)

k = frequency constant of the quartz oscillator (Hz-mm)

A = sensitive area of the crystal (cm^2)

ρ = density of the crystal (gm/cm^3)

$F_s(T)$ = frequency-temperature dependence functions of the sensing crystals (Hz/°C)

$F_r(T)$ = frequency-temperature dependence functions of the reference crystals (Hz/°C).

Letting

$$\Delta F_T(T) = F_s(T) - F_r(T) \quad ,$$

substituting values for the 15 MHz sensors delivered for the IECM,[1] and solving for Δm gives

$$\Delta m = (1.56 \times 10^{-9} \text{ g}/[\Delta F - \Delta F_T(T)] \quad .$$

Therefore, a 1-Hz change in frequency corresponds to a mass change of 1.56×10^{-9} gm/cm^2.

1. The measurement sensitivity of a 15 MHz crystal is 1.97 gm/cm^2-Hz. The QCM's delivered to Marshall Space Flight Center by Faraday Laboratories are specially designed and have an enhanced mass sensitivity approximately 20 percent higher than previously available mass sensors.

The QCM has several aspects which are advantageous to Shuttle bay measurements and several which are not. First, the inertial mass measured is not affected by the lack of gravity and is independent of orientation. The QCM is made from materials which are stable in the space vacuum, so that it is not self-contaminating. It has high mass change measurement sensitivity. The main disadvantage is that the material being measured must adhere tightly to the crystal surface; therefore, it will not measure particulates or volatiles which do not stick. Also, the crystal has a finite limit to the amount of material it can detect. When the mass deposited becomes large enough to damp the crystal from oscillating, the QCM voltage output drops below the counter threshold. This occurs at approximately 1×10^{-4} gm/cm^2. At this point, the crystal is heated to desorb contamination and return it to active oscillation. Contamination such as lubricants adsorbed and modified by photo-polymerization cannot be removed by heating because of the large desorption activation energy. The amount of contamination adsorbed after photo-polymerization is determined by observing the permanent QCM frequency shift after volatiles have been desorbed by heating.

The TQCM system has five identical sensor heads. Figure X-2 shows the essential components. Each head consists of a QCM sensor, an electronics unit, and a heat sink. A two-stage bismuth-telluride thermoelectric device uses the Peltier effect to heat or cool the sensor crystals to the commanded temperature. The sensor and electronics unit are mounted directly to a toroid of gold-coated aluminum which serves as a heat sink. Platinum resistance thermometers monitor the temperatures of the crystals and the heat sink. The heat sink also serves as the mounting attachment to the IECM as it is bolted to the frame. Because of this the frame is part of the heat sink. The five TQCM heads are mounted on each side of the IECM (except the bottom) so as to be looking in the +X, -X, +Y, -Y, and +Z orbiter axes. Locations of the heads are shown in Figure X-3. The five TQCM heads are connected to the TQCM controller which is mounted on the underside of the instrument shelf near the bottom of the IECM. The controller receives commands from the Data Acquisition and Control System (DACS) and sends data signals to the DACS to be recorded.

C. Instrument Performance

The commands which the TQCM heads receive from DACS are temperature settings which are planned in preflight programming. The baseline temperature will be 80°C. This temperature will be used to determine the "clean frequency" against which all frequencies recorded during the flight will be compared. The other data collection temperatures will be 30, 0, -30, and -60°C.

C-2

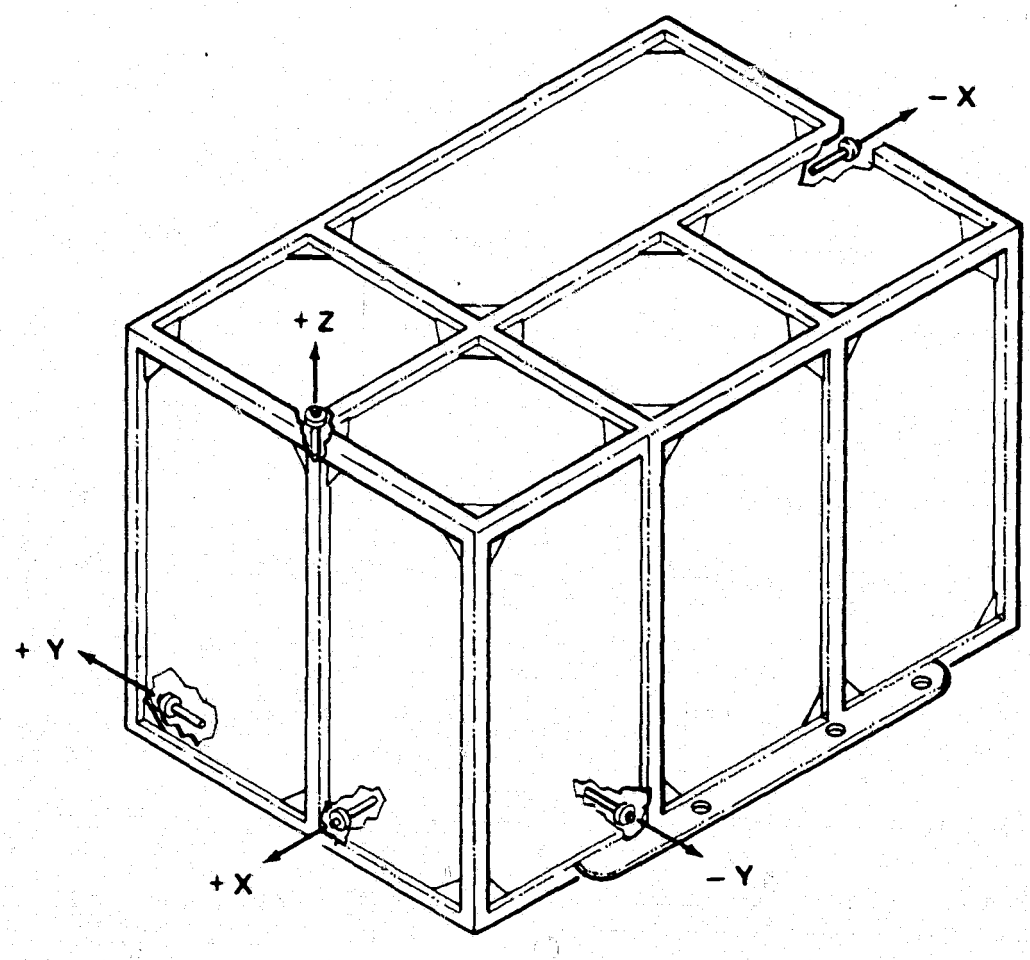

Figure X-3. Locations of TQCM sensor heads on the IECM.

These temperatures are referenced to a nominal heat sink (IECM frame) temperature of 20°C. The thermoelectric devices are designed to have the capacity to control the detector temperature to a maximum of 80°C below the heat sink temperature. For a heat sink temperature of 20°C, the lowest temperature will be -60°C. When the heat sink goes above 20°C, DACS is programmed to disallow a command of more than the 80°C differential. This is done to avoid an excess power drain which would occur if the thermoelectric device continued to try to reach an unattainable temperature. However, in the case in which the heat sink goes below 20°C, temperatures colder than -60°C can be reached. Accordingly, there will be a free-run mode in which full power can be sent to the thermoelectric device, allowing it to continually seek lower temperatures. The lowest possible temperature in this mode is -120°C. This free-run mode will not be programmed on the initial flight because of the high power drain and because of

the as yet unknown thermal behavior of the IECM frame. It will be used on a later mission during the "cold soak" mode to complement Cryogenic Quartz Crystal Microbalance (CQCM) data. The remaining mode which can be commanded is the low-power mode in which the crystal frequencies and temperatures are recorded, but the crystal temperatures are not controlled.

D. TQCM Operations

The four basic operational modes for the TQCM will be (1) prelaunch, (2) ascent, (3) orbital, and (4) descent. At specific time periods the TQCM's will be operated when the Shuttle is on the ground prior to launch. During this time the crystal temperatures will be allowed to drift with the cargo bay ambient temperature. The data output will be recorded 5 min/h to provide an indication of the long-term cleanliness of the cargo bay. Since the detectors are designed primarily for space-vacuum operation, this measurement will be a gross check on cargo bay conditions. It will also serve as a monitor on the condition of the TQCM system.

During ascent the TQCM crystals will continue to float with the ambient temperature. The transient conditions in pressure and temperature during launch, combined with the effects of vibration, will make data analysis difficult during this phase. Since the ascent phase is short (approximately 15 min), the frequency from the TQCM's will be read out at the maximum rate of one frequency and temperature readout per second. Because there are five TQCM's, this results in each detector being read once every 5 s during ascent. Mass adsorbed (or desorbed) can then be compared at each data point with the amount which was present at lift-off.

As soon as the "on-orbit" signal is received from the Orbiter, the TQCM system will begin its programmed temperature sequencing. This sequence is shown in Figure X-4. The first command will be for the crystals to go to 80°C for approximately 30 min. This will clean off the deposits from preflight and launch and establish the "clean frequency." Then the sensors will be commanded to 30°C for one orbit. A 30 min "cleanup" period at 80°C will follow. Then, 0°C and -30°C will be commanded, with an 80°C "cleanup" period between each setting. The final low temperature setting will be -60°C. After an orbit at this low temperature, the crystals' temperatures will be raised in 30 min steps through -30, 0, and 30 and finally to 80°C. This procedure is intended to permit the calculation of desorption rates between these specific temperature brackets to aid in characterizing the types of contaminants. This routine will be repeated until the "on-orbit" mode of the mission is completed. The first data plots will

ORIGINAL PAGE IS
OF POOR QUALITY

SUMMARY OF ON–ORBIT COMMANDS		
TIME (ELAPSED MINUTES)	COMMAND (SEEK TEMP SETTING)	MODE
0	+ 80	10
30	+ 30	9
120	+ 80	10
150	0	8
240	+ 80	10
270	- 30	7
360	+ 80	10
390	- 60	6
480	- 30	7
510	0	8
540	+ 30	9
570	REPEAT	

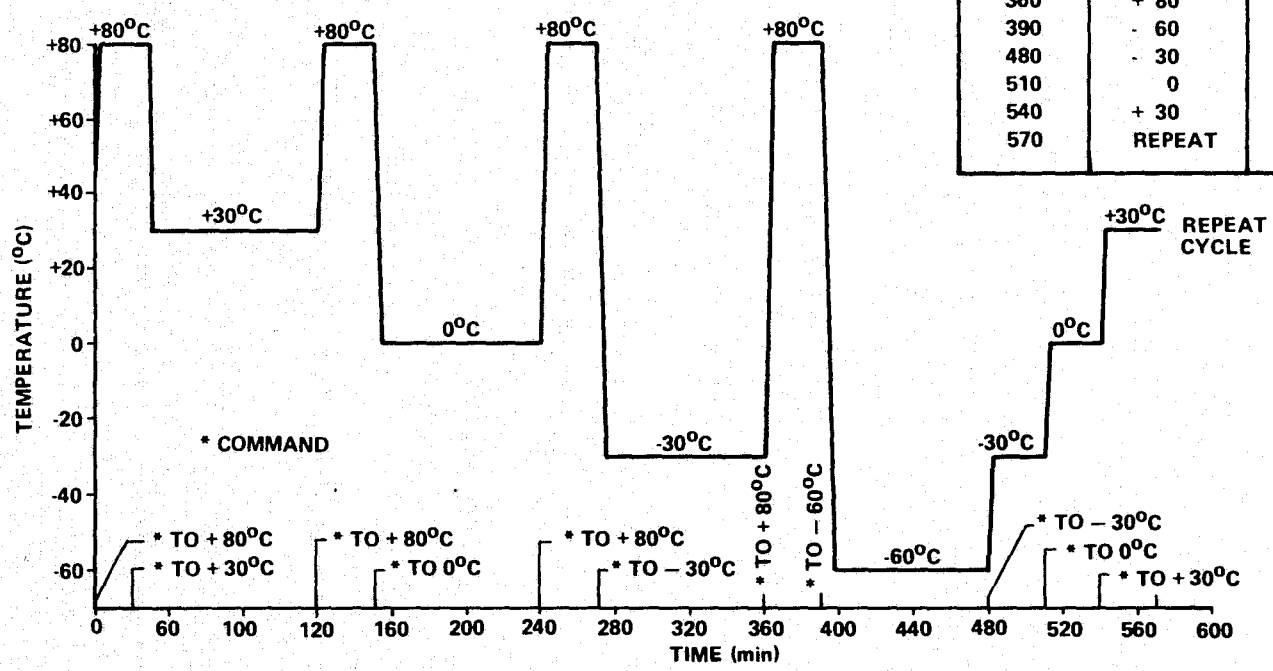

Figure X-4. TQCM command-temperature sequence (one cycle).

ORIGINAL PAGE IS
OF POOR QUALITY

be in terms of mass adsorbed per orbit for each of the four temperatures. Desorption rates for the temperature ranges of -60 to -30°C, -30 to 0°C, 0 to 30°C, and 30 to 80°C will also be plotted. The mass associated with the 80°C setting will also be plotted. Any increase in the frequency of the "cleanup" mode will give an indication of NVR buildup which can be caused by photopolymerization on surfaces which are exposed to the Sun. This will provide an interesting comparison to the NVR stage of the Cascade Impactor experiment which operates at ambient temperature.

During the descent portion of the mission, which will last approximately 2 h, the TQCM system will go back into the ambient temperature, high data rate mode. This will continue until the Orbiter has landed and power is turned off. Table X-1 summarizes the TQCM data recording format for the four mission modes.

Between flights the TQCM system will be refurbished for the next flight. This can be done by exchanging the entire system with a flight-ready system or by changing the heads, or by removing the heads, exchanging the QCM sensors, and reinstalling the heads.

TABLE X-1. TQCM DATA RECORDING FORMAT

Preflight	Ascent	On-Orbit	Descent
All frequencies and temperatures recorded for specific periods,[a] once each hour (temperatures floating with ambient).	All frequencies and temperatures recorded once each 5 s (temperatures floating with ambient).	All frequencies and temperatures recorded once each minute (temperatures commanded according to Figure X-4).	All frequencies and temperatures recorded once each 5 s (temperatures floating with ambient).

a. See Table X-2

E. Data Reporting

After the Orbiter has been ferried back to Kennedy Space Center and the IECM is removed from the cargo bay, the data tape will be flown to Marshall Space Flight Center. The TQCM data will be copied on magnetic tape which will be given to the instrument scientist. The initial data reduction task will be to provide plots of data using the format in Table X-2. The data will be processed by a Univac 1108 digital computer and plotted on a Cal Comp plotter. The computer program will convert crystal frequency changes into mass deposition

TABLE X-2. DATA PRESENTATION FORMAT FOR INITIAL REPORT

Preflight	Ascent	On-Orbit	Descent
Continuous plot of mass deposition and temperature of all five sensors versus time — one data point for each sensor per hour for specific time periods such as while in the Orbiter Processing Facility, and on the Mobile Launch Platform while in the Vertical Assembly Building and at the launch pad.	Continuous plot of mass deposition and temperature of each sensor versus time — twelve data points for each sensor per minute.	Plot of mass accumulation rate per orbit at four temperatures, 30, 0, -30, and -60°C; plus plot of total mass accumulation at 80°C; plot of mass desorption rates for each temperature range, -60 to -30°C, -30 to 0°C, 0 to 30°C, and 30 to 80°C; one data point for each sensor per minute.	Continuous plot of mass deposition and temperature of each sensor versus time — twelve data points for each sensor per minute.

and compute the mass accumulation rates per orbit and mass desorption rates for each of the four temperature ranges. It will provide time correlation of all plots.

The second phase of data analysis will be the correlation of periods of high mass accumulation with events and conditions. Examples of events and conditions are openings and closings of cargo bay doors, rocket firings for attitude control, use of the flash evaporator for water elimination, the operation of the various vents on the Orbiter, leaks of atmospheric gases from the cabin, the relative positions of the Orbiter and the Sun and the directionality of the molecules (that is, from the direction of the cabin, the wings, or the tail).

During this second data analysis period, the crystal surfaces will be scanned with an electron beam and analyzed using the technique of Auger analysis for elemental identification of the residue. Also, photomicrographs of the crystal surfaces will be taken. The report on this second phase of data and analysis will be in terms of mass accumulation versus time curves, and mass desorption rates (as in the first report) with annotations, explanations, photographs, and analysis results.

The third phase of data analysis will be open literature publications on findings of interest on a nonscheduled basis.

F. TQCM Measurements on LDEF

On one of the Orbiter Flight Test (OFT) missions a Long Duration Exposure Facility (LDEF) will be carried aloft by the Shuttle and released. It will stay in orbit for 6 to 8 months and be retrieved on a future mission. A scaled-down version of the IECM will be included in the LDEF for contamination monitoring. Of special interest will be the contamination created during deployment of the LDEF. One of the LDEF IECM instruments will be a TQCM.

The positions of the TQCM heads on the LDEF are shown in Figure X-5. The LDEF TQCM system will have only one sensor head mounted in the IECM frame. It will be looking in the +Z direction. The other four heads will be remotely located at selected locations on the LDEF, as shown in Figure X-5. The axes refer to Orbiter axes, while the LDEF is in the cargo bay. The TQCM on row 6 will be looking at the Orbiter when the LDEF is lifted up out of the cargo bay. The LDEF IECM will operate on battery power and will take data during deployment and continue until the battery is depleted. For this reason, the LDEF TQCM will not go through the command sequencing as described previously but, instead, will be commanded to -30°C and remain at this temperature. The TQCM data are tape recorded and will not be available until LDEF retrieval.

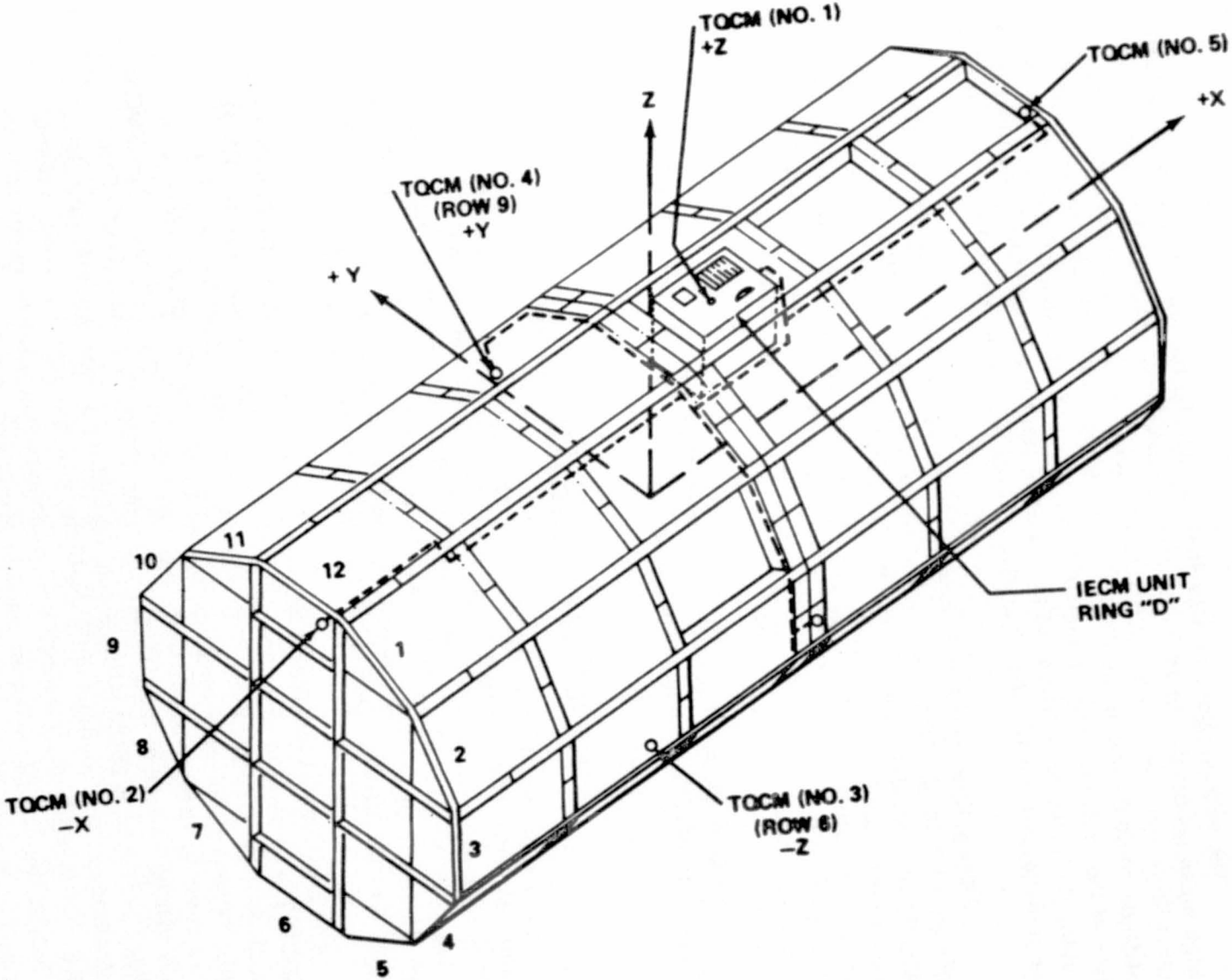

Figure X-5. TQCM locations on LDEF.

REFERENCES

X-1. McKeown, Daniel: Design Parameters for VHF Crystal Units. Proceedings of 11th Annual Frequency Control Symposium, Fort Monmouth, New Jersey, 1958.

X-2. McKeown, Daniel: A New Method for Measuring Sputtering in the Region Near Threshold. Proceedings of 2nd Rarefied Gas Dynamics Symposium, University of California, Berkeley, California, 1960.

X-3. Sauerbrey, G. Z.: Zeitschrift für Physik, vol. 155, 1959, pp. 206-222.

X-4. Sauerbrey, G. Z.: Zeitschrift für Physik, vol. 178, 1964, p. 457.

X-5. McKeown, Daniel: Erosion Gauge. USA Patent No. 3,237,447, Washington, D.C., 1966.

X-6. McKeown, Daniel, Fox, M. G., and Schmidt, J. J.: Measurement of Surface Erosion from Discoverer 26. ARS Journal, vol. 32, 1962.

X-7. McKeown, Daniel: Surface Erosion in Space. Proceedings of Third Rarefied Gas Dynamics Symposium, vol. 1, Academic Press, 1963.

X-8. Warner, A. W.: Micro-Weighing with the Quartz Crystal Oscillator — Theory and Design. Ultra Micro Weight Determinations in Controlled Environments, Wiley and Sons, New York, 1969, pp. 137-161.

X-9. King, William H., Jr.: Using Quartz Crystals as Sorption Detectors, Part I. Research and Development, April 1969, pp. 28-34.

X-10. Lu, Chih-shun: Improving the Accuracy of Quartz Crystal Monitors. Vacuum Technology, Technical Publishing Company, 1974, pp. 45-50.

X-11. McKeown, Daniel, and Corbin, W. E.: Space Measurements of the Contamination of Surfaces by OGO-6 Outgassing and Their Cleaning by Sputtering and Desorption. National Bureau of Standards SP-336, Paper No. 7, October 1970, pp. 113-127.

X-12. McKeown, Daniel, and Corbin, W. E.: Thermoelectrically Cooled Quartz Crystal Microbalance. Proceedings of the 7th Space Simulation Conference, NASA SP-336, 1973, pp. 345-354.

X-13. McKeown, Daniel, and Claysmith, C. R.: Quartz Crystal Microbalance Systems for Shuttle Contamination Measurements. Proceedings of International Spacecraft Conference, U.S. Air Force Academy, Colorado Springs, Colorado, 1978.

INSTRUMENT SPECIFICATION SUMMARY
TEMPERATURE-CONTROLLED QUARTZ CRYSTAL MICROBALANCE (TQCM)

Physical Characteristics:

Weight —
- Sensor — 2.37 kg (including cables at 5×0.2 kg)
- Electronics — 4.5 kg
- Total 6.87 kg

Dimensions —
- Sensors — $14.8 \times 6.4 \times 6.4$ cm
- Electronics — $33.0 \times 191 \times 16.0$ cm

Power Requirements:

Operational mode — 73 W (Cooling All Five Sensors, maximum power)
Standby mode — 1.85 W

Performance Data:

Sample rates — 12 sample/min/sensor (ascent and descent)
1 sample/min/sensor (on-orbit)

Data output —
- Frequency (mass) —
  - Range — 800 to 65 535 Hz = 1.56×10^{-9} to 1.5×10^{-4} gm/cm^2
  - Resolution — ±1 Hz = $\pm 1.56 \times 10^{-9}$ gm/cm^2
- Voltage (temperature) —
  - Range — 0 to 5.12 Vdc = -83 to 107°C
  - Resolution — ±0.03 V = ±1°C

XI. CRYOGENIC QUARTZ CRYSTAL MICROBALANCE (IECM08)

James A. Fountain

A. Objective

The objective of the Cryogenic Quartz Crystal Microbalance (CQCM) is to provide a record of the adsorption and desorption of molecular contamination in the Shuttle cargo bay. On specific Shuttle missions when the cargo bay is oriented so that it does not receive direct solar heating for long periods of time, the CQCM will have the special objective of measuring molecular water vapor. This can be accomplished because the passive radiative design of the CQCM causes the detector crystals to cool to cryogenic temperatures at which molecular water will condense.

Molecular water will be a major product of the Shuttle Orbiter system. It is estimated that the flash evaporator will discharge approximately 141 kg of water (in the vapor state) per day in orbit [XI-1]. This is a potential problem for cold surfaces such as cooled telescope optics or cryogenic detector packages. Because the Orbiter will be traveling between 7 and 8 km/s, the escaping water molecules will undergo collisions with ambient molecules which have kinetic energies equivalent to 50 000 K. As a result of these collisions, some of the H_2O molecules will be directed back to the Orbiter. The following expression [XI-2] can be used to calculate the ratio of returned molecules to outgoing molecules:

$$\frac{N_{ret}}{N_{out}} = \frac{R_o N_a V_a \sigma_a}{V_r} \frac{\pi^2 - 4}{8}$$

where

V_r = the radial velocity of the outgoing molecule

V_a = the spacecraft velocity

σ_a = the scattering cross section of the colliding molecules

N_a = the ambient molecular density

R_o = the spacecraft radius.

Using values typical of Skylab, Naumann [XI-3] calculated a return flux ratio

$$\frac{N_{ret}}{N_{out}} = 0.0023 \ .$$

Using this ratio and the water outgassing value for Skylab, Naumann calculated the water return flux; he then calculated a molecular stay time (τ) of 810 s. Using quartz crystal microbalance data from Skylab, he developed an empirical relationship for stay time:

$$\tau = 1.05 \times 10^{-16} e^{6049/T} \text{ s} \ .$$

Substituting 810 s for τ and solving for T, it was determined that water will condense and collect on a surface in space at a temperature of -133°C or lower. This figure may vary with Shuttle conditions, but it was used as a design criterion for the CQCM experiment.

B. Instrument Description

The CQCM (Fig. XI-1) was designed, developed, and manufactured by Faraday Laboratories, Inc., of LaJolla, California [XI-4]. The experiment makes use of quartz crystal microbalance technology which has been described previously in Section X for the TQCM. The major difference between the CQCM and the TQCM is that the CQCM uses passive radiative techniques for detector temperature cooling rather than active thermoelectric temperature control. For this reason the CQCM uses much less power.

The location of the CQCM is shown in Figure XI-2. The three major components of the CQCM head, as shown in Figure XI-3, are (1) the two quartz crystal microbalance sensors, (2) the passive thermal radiator, and (3) the electronics and mounting baseplate. Heat input to the CQCM will be from the Sun, the Induced Environment Contamination Monitor (IECM) frame, the

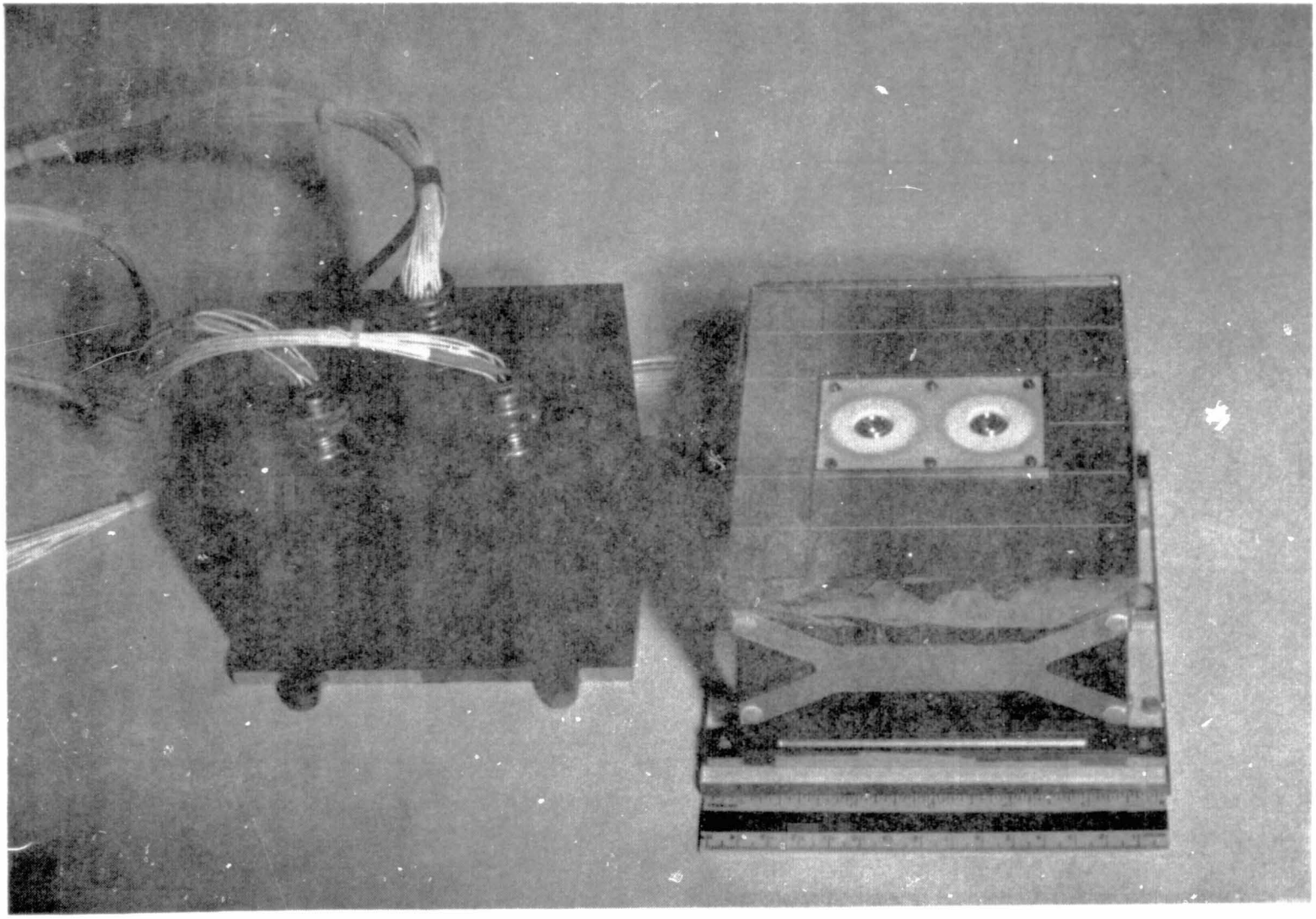

Figure XI-1. CQCM system.

ORIGINAL PAGE IS
OF POOR QUALITY

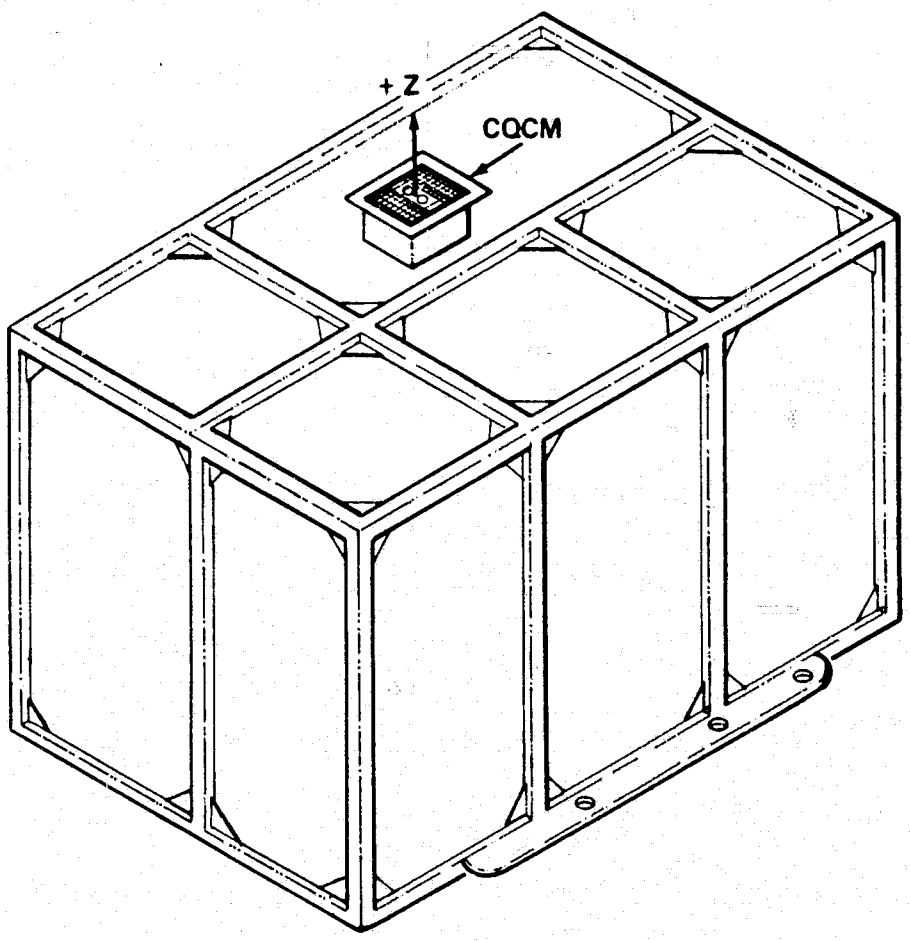

Figure XI-2. Location of CQCM sensor head on the IECM.

electronics, and radiation from its surroundings. The sensors are thermally coupled (conductively) to the radiator and insulated from the electronics and baseplate by four low-conductivity fiberglass epoxy laminate legs. The radiator is designed to continually dissipate heat away from the detector crystals so that they will always seek lower temperatures. It consists of an array of second-surface, silver-coated quartz mirrors which are attached to an aluminum plate plate by a thin layer of RTV 566 adhesive. The quartz mirrors provide a solar absorptance (α) of 0.06 and a thermal emittance (ϵ) of 0.8. When the Orbiter is positioned so as to expose the CQCM to sunlight, heat is reflected away by the second-surface silver mirrors. In this way the CQCM provides a very low-power cooled quartz crystal microbalance mass measurement. However, on specific missions the Orbiter is programmed to point the cargo bay away from the Sun for a number of hours. It is in this "cold soak" mode that the CQCM is designed to reach cryogenic temperatures. When the heat from the Sun is

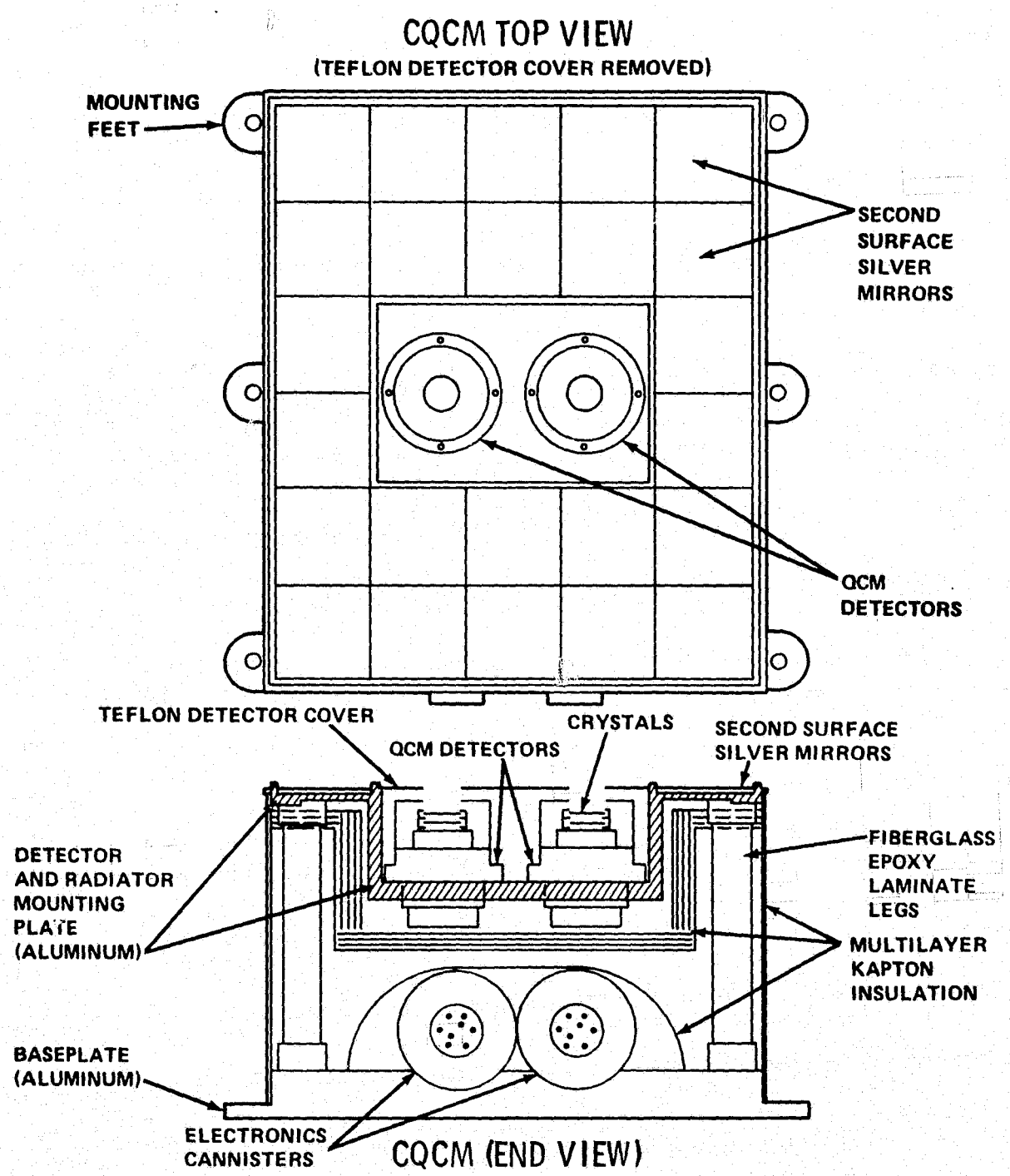

Figure XI-3. CQCM components.

completely removed, the high emittance of the quartz mirrors cools the CQCM radiator and sensors to cryogenic temperatures. The radiator is thermally isolated from the IECM frame and electronics to maintain the proper temperature gradient for cryogenic operation. The CQCM radiator has a 2π sr view of the 4 K deep space radiation sink because it is mounted flush with the top of the IECM. The CQCM head is protected from radiation from its surroundings by 20 layers of gold-coated Kapton (multilayer foil insulation) and is mounted in a stainless steel well enclosed on all sides (except the top). Since the IECM frame will be heated electrically in the cold-soak mode, the CQCM baseplate is also insulated from the stainless steel mounting well by a flat plate made of low thermal conductivity thermoset epoxy.

The CQCM has two quartz crystal microbalance sensors which have the same viewing angle. Sensor No. 2 is insulated in its coupling to the radiator by Teflon washers on the hold-down screws. Sensor No. 1 uses metal washers. This feature causes sensor No. 2 to lag behind sensor No. 1 for a few minutes in reaching lower temperatures. This time lag, or difference in sensor temperature at a specific time, plays an important role in data analysis. According to vapor pressure models, water will condense on a surface at specific temperatures and pressures. The ambient pressure will be determined from mass spectrometer data. At specific times selected on the basis of the vapor pressure model, mass accumulation on sensor No. 1 (the lower temperature sensor) will represent all molecular species collected, including water. Mass data from sensor No. 2 (the higher temperature sensor) will represent all molecular species collected except water. Subtraction of mass data of sensor No. 2 from mass data of sensor No. 1 should yield the water component.

The temperature difference between detectors can be enhanced by activating (in preflight programming) an 80 mW heater mounted in sensor No. 2. The CQCM also has two other heaters, a 163 mW heater to heat the sensors for cleaning purposes and a 470 mW heater to heat the radiator mirrors for cleaning.

These heaters can be used to give an indication of the molecules deposited using a method described by McKeown [XI-5]. The equation for relating adsorbed mass with molecular residence time is

$$S_r = S_0 \exp^{(-t/\tau_r)}$$

where

S_0 = the amount of material on the CQCM crystals at time $t = 0$

S_r = the amount of material present on the CQCM crystals after time t

τ_r = the average residence time of the molecule.

τ_r is given by

$$\tau_r = \tau_0 \exp (\Delta E/RT)$$

where

τ_0 = the vibrational period of the lattice

ΔE = the desorption activation energy of the deposited molecules

R = the gas constant

T = the absolute temperature.

Solving for the desorption activation energy ΔE,

$$\Delta E = -RT \ln [(\tau_0/t) \ln(S_0/S_r)] \quad .$$

Therefore, when the mass on the quartz crystal microbalance is determined at some time, t_0, and at a temperature of T_0, the heater can be actuated to cause the material to desorb. After some time t, when the temperature T_1, becomes constant, S_r can be found; and, using the average of T_0 and T_1 for T, the desorption activation energy can be determined. This value can be compared with tabulated values in the literature for evaluation.

This procedure has limitations. Large temperature changes will cause the activation energies to be average values of several species. Also, the fact that all commands to the IECM instrumentation must be programmed before flight makes the correct timing of heater activation difficult. However, the procedure can serve as an indicator of the success of the measurement.

C. Instrument Performance

Based on thermal analyses and laboratory simulation, it is anticipated that the CQCM will reach -133°C from 20°C after approximately 12 h in the cold-soak mode. This 12 h figure must be regarded as a variable, however, because the time that it takes to reach a certain temperature is dependent on several factors which cannot be accurately predicted: (1) the starting temperature, which is dependent on the Orbiter activities prior to going into the cold soak, (2) the heat input from the IECM frame, and (3) the cleanliness of the radiator mirrors.

D. Instrument Operations

On the initial OFT the CQCM will be operated on the following operations plan. During preflight operations the CQCM will remain covered until the last physical access to the cargo bay. During ascent the quartz crystal microbalance frequency and temperature channels will be read out in the high data rate mode; i.e., each frequency and temperature will be recorded every 5 s. When the on-orbit signal is received, the CQCM sensors will be sampled every minute. The CQCM sensors will be allowed to seek their minimum temperatures for a period of 24 h. Then the 80 mW heater will be activated for a period of 6 h. The 470 mW heater will then be activated for 12 h. This sequence will be repeated until the de-orbit signal is received. During descent the CQCM detectors will float with the ambient temperature, and the frequencies and temperatures will be sampled in the high data rate mode. This mode will be maintained until the Orbiter has landed and power has been turned off. Instrument operations are summarized in Table XI-1.

The CQCM will be refurbished between each flight for reuse. This can be done by exchanging the entire system and substituting a flight-ready system, or by removing the head, replacing the quartz crystal microbalance sensors, and reinstalling the head.

E. Data Reporting

The initial data reduction task will be to provide plots of the mass accumulation on the crystal surfaces as a function of temperature and time using the format in Table XI-2. The data will be processed by a Univac 1108 digital computer and plotted on a Cal Comp plotter. The computer will convert crystal frequency changes into mass adsorption and desorption and will calculate activation energies for the two temperature ranges which will occur as a result of activating the two heaters.

TABLE XI-1. CQCM OPERATIONS AND DATA RECORDING FORMAT

Preflight	Ascent	On-Orbit	Descent
Frequencies and temperatures recorded for specific periods, once each hour, after removal of covers to establish preascent mass accumulation level.	Frequencies and temperatures recorded once each 5 s (temperatures floating with ambient).	Frequencies and temperatures recorded once each minute. Heater commands: 1. 0-24 h — no command 2. 24-30 h — 80 mW heater actuated 3. 30-42 h — 470 mW heater actuated 4. Repeat.	Frequencies and temperatures recorded once each 5 s (temperatures floating with ambient).

TABLE XI-2. DATA PRESENTATION FORMAT FOR INITIAL REPORT

Preflight	Ascent	On-Orbit	Descent
Continuous plot of mass deposition and temperature of sensors versus time (one data point for each sensor per hour for specific time periods).	Continuous plot of mass deposition and temperature of sensors versus time (twelve data points for each sensor per minute).	Continuous plot of mass accumulation versus temperature; tabular presentation of desorption activation energies for two temperature ranges (one data point for each sensor per minute).	Continuous plot of mass deposition and temperature of each sensor versus time (twelve data points for each sensor per minute).

The second phase of data analysis will be the correlation of periods of high mass accumulation with events and conditions. Examples of events and conditions are openings and closings of cargo bay doors, rocket firings for attitude control, use of the flash evaporator for water elimination, the operation of the various vents on the Orbiter, and the relative positions of the Orbiter and the Sun. Molecular water content calculations will be presented for the cold-soak missions. During this second data analysis period, the crystal surfaces will be scanned with an electron beam and analyzed using the technique of Auger analysis for elemental identification of the residue. Also, photomicrographs of the crystal surfaces will be taken. The report on this second phase of data analysis will be in terms of mass accumulation versus time curves and of mass desorption rates (as in the first report) with annotations, explanations, photographs, and analysis results.

The third phase of data analysis will be open literature publications on findings of interest on a nonscheduled basis.

F. CQCM Measurements on the LDEF

On one of the OFT missions, the LDEF will be carried aloft by the Shuttle and released. It will stay in orbit for 6 to 8 months and be retrieved on a future mission. A scaled-down version of the IECM will be included in the LDEF for contamination monitoring. Of special interest will be the contamination created during deployment of the LDEF. The LDEF IECM will contain a CQCM, as shown in Figure XI-4. The CQCM will be identical to the one described previously for the OFT's. However, it will not reach cryogenic temperatures because there is no cold-soak mode, but it will provide a low-power cooled quartz crystal microbalance measurement. The CQCM data are tape recorded and will not be available until LDEF retrieval.

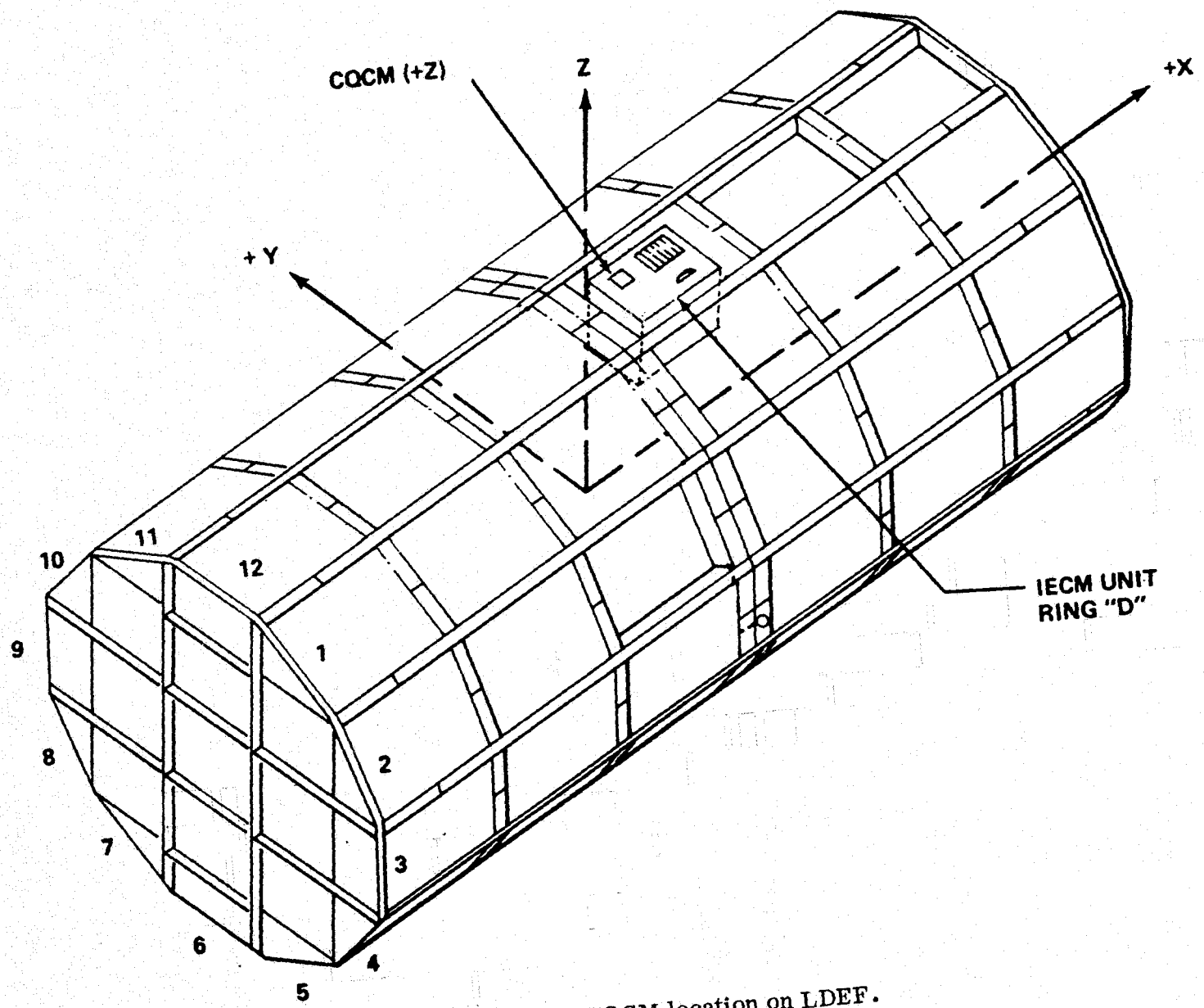

Figure XI-4. CQCM location on LDEF.

REFERENCES

XI-1. Space Shuttle System Payload Accommodations, Level II Program Definition and Requirements, Volume XIV. NASA, Johnson Spacecraft Center, Houston, Texas, June 17, 1977, pp. 4-20.

XI-2. Robertson, S. J.: Backflow of Outgas Contamination onto Orbiting Spacecraft as a Result of Intermolecular Collisions. LSMC-HREC D 30600, Lockheed Missiles and Space Company, Contract NAS8-26554, June, 1972.

XI-3. Naumann, Robert J.: Design Principles for Contamination Abatement in Scientific Satellites. Astronautical Research, 1972, pp. 163-176.

XI-4. McKeown, D., and Claysmith, C. R.: Quartz Crystal Microbalance Systems for Shuttle Contamination Measurements. International Spacecraft Contamination Conference, U.S. Air Force Academy, March, 1978, pp. 1-24.

XI-5. McKeown, D., and Corbin, W. E., Jr.: Space Measurements of the Contamination of Surfaces by OGO-6 Outgassing and Their Cleaning by Sputtering and Desorption. Space Simulation, NBS Special Publication 336, October, 1970, pp. 113-127.

INSTRUMENT SPECIFICATION SUMMARY
CRYOGENIC QUARTZ CRYSTAL MICROBALANCE

Physical Characteristics:

Weight —
- Sensor — 1.05 kg (including cables, at 2 × 0.2 kg)
- Electronics— 0.89 kg
- Total 1.94 kg

Dimensions—
- Sensor — 16.2 × 15.2 × 8.4 cm
- Electronics — 11.0 × 14.2 × 8.4 cm

Power Requirements:

Heating both QCM's plus mirror for cleaning off ice (maximum power) — 3.08 W

Standby mode — 1.33 W

Performance Data:

Sample rates — 12 samples/min (ascent and descent)
1 sample/min (on-orbit)

Data output —
- Frequency (mass) —
  - Range — 800 to 65 535 Hz = 1.56×10^{-9} to 1.56×10^{-4} gm/cm^2
  - Resolution — ±1 Hz = $\pm 1.56 \times 10^{-9}$ gm/cm^2
- Voltage (temperature) —
  - Range — 0 to 5.12 Vdc = -103 to 37°C
  - Resolution — ±0.04 V = ±1°C

XII. CAMERA/PHOTOMETER (IECM09)

Kenneth S. Clifton and Jerry K. Owens

A. Objective

Of particular concern to the astronomical community is the effect on astronomical experiments of Space Transportation System (STS) induced contamination in the form of individual particles and general background. A particular problem is foreseen for the 1.5 m cryogenic infrared telescope proposed for the Shuttle Infrared Telescope Facility (SIRTF) which can detect a particle as small as 5 μ entering its field-of-view. Even a moderate particulate generation rate by the STS would severely limit the performance of the telescope. Such generation rates were, in fact, observed during the Skylab mission by the S-052 coronagraph, which detected an average of 7 to 30 sporadic particles per hour within a 0.002 sr field-of-view.

The guidelines recommended by the Contamination Requirements Definition Group (CRDG) concerning the particulate background are as follows:

> Production of particles by the STS shall be limited so that an average of less than one discernable particle per orbit enters a 1.5×10^{-5} sr field-of-view along any line within 60 deg of the +Z axis and this field-of-view contains no discernable particles for 90 percent of the operational period. A discernable particle is a particle with diameter of 5 μm within a range of 10 km.

To make optical measurements of both the induced particulate environment and the background brightness, two automated Camera/Photometers have been placed aboard the Induced Environment Contamination Monitor (IECM) unit.

B. Instrument Description

Two Camera/Photometers are located in the IECM as shown in Figure I-1. The units were developed by Epsilon Laboratories, Inc., Bedford, Massachusetts. Each of the two Camera/Photometers is housed within a pressurized canister to enable a simplified and efficient operation in the vacuum environment of space.

The canister is pressurized to 10^6 dynes/cm^2 (14.7 lb/in.^{2}) and contains a standard atmospheric mixture of gases. An initial relative humidity of 20 percent is utilized to prevent film damage at higher temperatures, and other film problems such as static markings, sticking, and reticulation. Further information about the effects of environment on film may be found in the Appendix.

Observations of the external contamination environment are made by the camera through a quartz window. A multivaned baffle system is utilized to prevent stray light from impinging upon the window and raising the background intensity. The baffle is designed to reject scattered light to levels below 10^{-14} $B_{\odot}$ for solar angles greater than 60 deg from the optical axis. A cut-away view of this configuration is depicted in Figure XII-1.

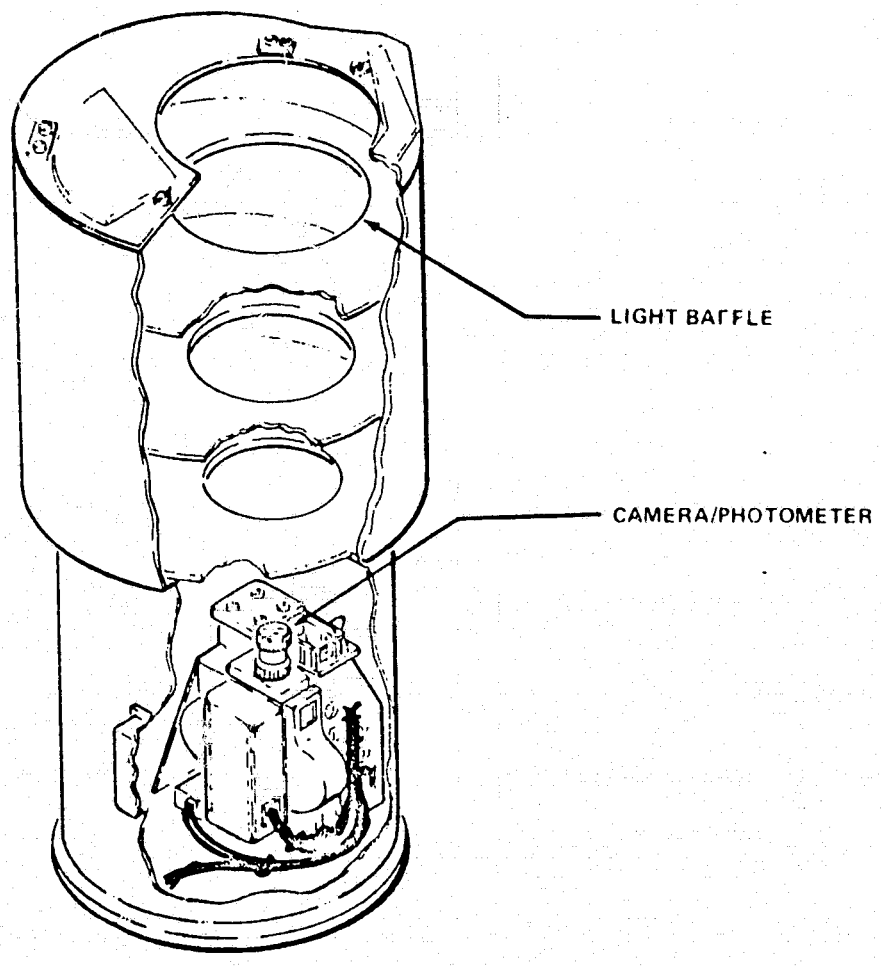

Figure XII-1. Camera/Photometer configuration.

Each of the two canisters houses a 16 mm Model H-16SB Bolex movie camera with a nominal film capacity of 4000 frames. The camera is equipped with an 18 mm f/0.9 lens with a nominal field of view of 20 deg half angle (limited by baffle design considerations to 10 deg). The camera operates remotely and unattended at a rate of 24 frames/h with a maximum exposure duration of 150 s. A photograph of the camera system is displayed in Figure XII-2.

Operating in conjunction with the camera is an integrating photometer which monitors continuously the background brightness. This brightness is measured over a dynamic range of 10^3 centered at 10^{-13} $B_\odot$. The photometer also functions to control exposure time by terminating any exposure which exceeds a predetermined brightness level. This value is adjustable over a range of 10^{-2} to 10^{-4} mcs to correspond to film exposure requirements. It assures a proper exposure level for each data frame. The photometer also inhibits any exposure if ambient light levels are too intense. The photometer utilized for these operations is an EMR type 521N-01-CM-M4 miniature photomultiplier tube (PMT). The approximate dimensions of the tube are 10 cm in length and slightly more than 1 cm in diameter. Light is focused onto the cathode through a folded optics arrangement with the same 10 deg half-angle field of view as the camera, and the PMT is protected by a special shutter controlled by appropriate timing and logic circuitry to operate in a "peek" (i.e., quick-close, slow-open) mode. Should the background brightness become too intense, the PMT is operated in this mode until the intensity is reduced to the normal operating range. Further protection against sudden, very high intensity levels is accomplished through a special high-voltage power supply design. The supply is designed to collapse when the dynode current exceeds a designated threshold value.

Due to the sensitivity of the photomultiplier, additional protection is provided to the photometer in case of direct solar exposure. This is accomplished by a photodiode which inhibits both camera and photometer operation. The threshold value for this operation is adjustable in the range from 10^{-6} to 10^{-10} $B_\odot$.

A spring-loaded shutter actuated by a solenoid latch pin is attached to the top-most baffle and used for thermal protection during any solar roast mode. The shutter is activated during periods when the direct solar input energy to the camera is high. During such periods the baffle aperture will absorb almost all of the incident radiation, thus increasing the temperature of the package and posing potential damage to the film. Again, additional information about environmental effects on film may be found in the Appendix.

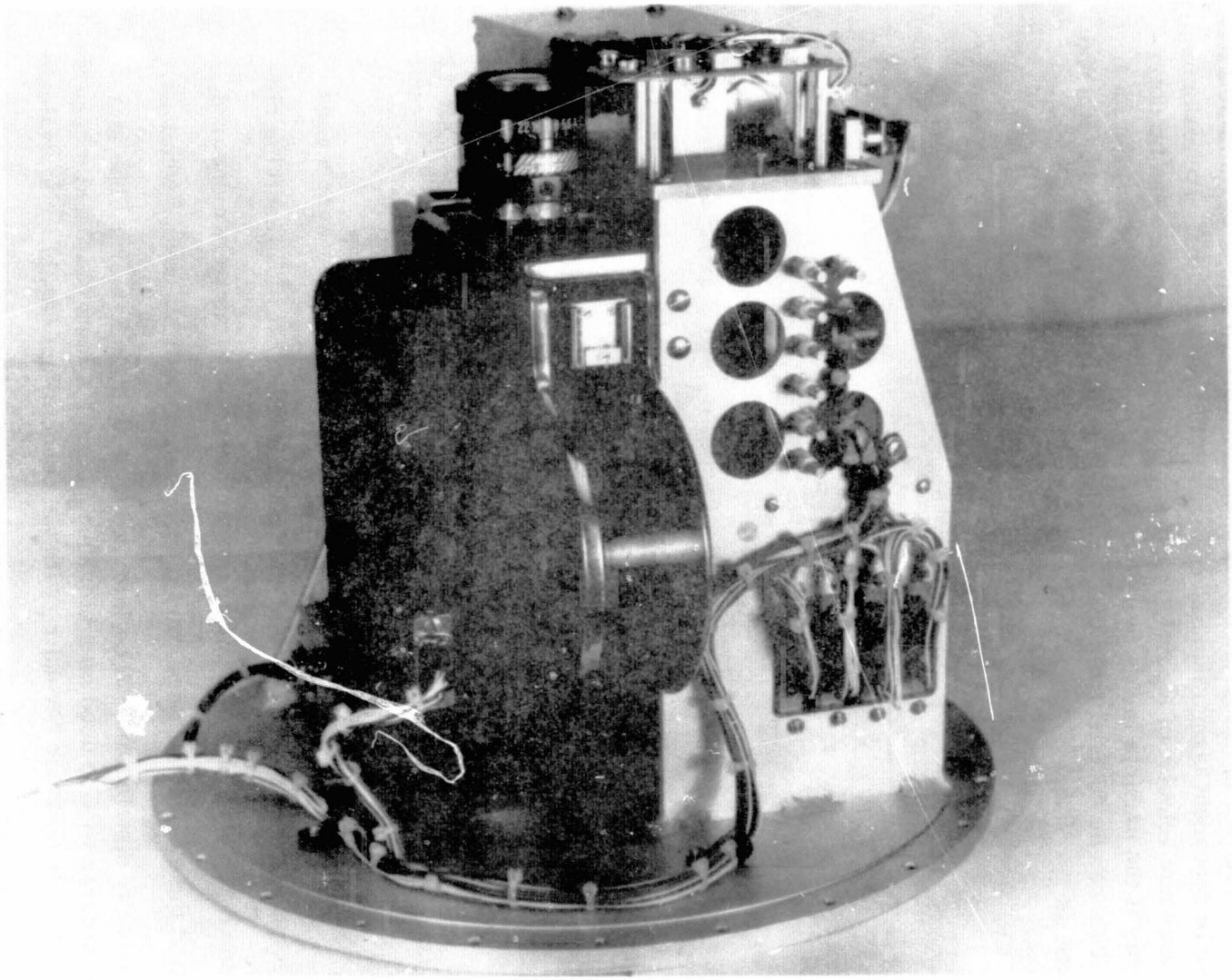

Figure XII-2. Camera/ Photometer system.

ORIGINAL PAGE IS
OF POOR QUALITY

C. Instrument Performance

Information regarding the size and velocity distributions of contaminant particles is dependent upon a number of measurable parameters. For example, the distance and velocity of a particle appearing as a point source can be determined only if the particle image is defocused to a measurable size at the focal plane. This can be derived from the geometry of the resulting ray diagram and expressed as

$$d_i = d_A \frac{F}{r} \frac{\left(1 - \frac{r}{r_o}\right)}{\left(1 - \frac{F}{r_o}\right)} \qquad \text{(XII-1)}$$

where d_i is the diameter of the focal plane image, d_A and F are the aperture size and focal length, respectively, of the optics used, r is the particle distance from the camera, and r_o is the distance at which the camera is focused. With the camera focused at infinity, $1/r_o = 0$ and the expression reduces to

$$d_i = d_A \frac{F}{r} \quad . \qquad \text{(XII-2)}$$

Because of the inverse relationship of d_i and r, d_i decreases as r increases until at some distance r_c, the size of the image equals that of a resolving element of the detector. At this point d_i can no longer be accurately measured. r_c is called the critical distance, and it represents the limit beyond which no size or velocity distribution can be inferred with a single camera. The fact that two cameras will be used as a stereoscopic pair allows continued measurements of particle distance beyond r_c with the concomitant capability to evaluate particle velocity and an upper limit to particle size. However, even with the stereo cameras, particle detection will be limited by the inverse r^2 relationship. The concerns here, however, will be for the particle within the critical distance.

The energy, E_f, delivered to a resolving element of film (i.e., the exposure) is related to the intensity I_f of incident light by

$$E_f = I_f t \qquad \text{(XII-3)}$$

where t is the duration of image exposure. For very slow-moving or stationary particles the duration of image exposure could be limited by the integration time of the instrument. However, in the case of the Camera/Photometers, integration times of 120 s are expected during normal operation, and the duration of image exposure will be determined by the particle velocity, since

$$t = \frac{d_i}{\dot{x}_f} \qquad \text{(XII-4)}$$

where d_i, once again, is the diameter of a system resolving element and $\dot{x}_f$ is the writing speed at the image plane of the particle. Substituting equation (XII-2) for d_i and using the relationship

$$\dot{x}_f = F \frac{V_t}{r} \quad , \qquad \text{(XII-5)}$$

where V_t is the transverse velocity of the particle,

$$t = \frac{d_A F}{r} \Big/ \frac{F V_t}{r} = \frac{d_A}{V_t} \quad . \qquad \text{(XII-6)}$$

Thus,

$$E_f = I_f \frac{d_A}{V_t} \quad . \tag{XII-7}$$

(The Skylab S-052 results indicated a typical particle velocity of 1 m/s.)

The intensity, I_f, of light incident on a resolving element at the focal plane of an optical system is composed of the intensity, I_s, of light scattered by the particle modified by the transmission of the lens, T, and by an intensification factor equal to the ratio of the lens aperture area ($\pi/4\ d_A^2$) to the area of the resulting circle of confusion ($\pi/4\ d_i^2$) of the defocused particle such that

$$E_f = I_s \frac{\frac{\pi}{4} d_A^2}{\frac{\pi}{4} d_i^2} \frac{d_A}{V_t} T \quad . \tag{XII-8}$$

The intensity of sunlight received by a detector from a scattering particle may be expressed as

$$I_s = I_\odot \frac{1}{r^2} \left(\frac{d\sigma}{d\Omega}\right)_0 \tag{XII-9}$$

where $I_\odot$ is the intensity of sunlight incident on the particle, r is the distance of the particle from the detectors, and $(d\sigma/d\Omega)_0$ is the scattering cross-section of the particle. Thus,

$$E_f = I_\odot \frac{1}{r^2} \left(\frac{d\sigma}{d\Omega}\right)_0 \frac{\frac{\pi}{4} d_A^2}{\frac{\pi}{4} d_i^2} \frac{d_A}{V_t} T \quad . \tag{XII-10}$$

Since from equation (XII-2) $d_i = d_A F/r$,

$$E_f = I_\odot \frac{1}{r^2} \left(\frac{d\sigma}{d\Omega}\right)_\theta \frac{d_A^{\,2} r^2}{F^2 d_A^{\,2}} \frac{d_A T}{V_t} = I_\odot \left(\frac{d\sigma}{d\Omega}\right)_\theta \frac{d_A}{F^2} \frac{T}{V_t} \quad . \qquad \text{(XII-11)}$$

The scattering cross-section, $(d\sigma/d\Omega)_\theta$, of a particle at large scattering angles, θ, can be approximated to

$$\left(\frac{d\sigma}{d\Omega}\right)_\theta = \pi a^2 \frac{2A}{3\pi^2} (\sin\theta - \theta\cos\theta) \qquad \text{(XII-12)}$$

where the particle is assumed to be a Lambertian sphere of radius a and albedo A.

Assuming an albedo of unity,

$$E_f = I_\odot \frac{d_A}{F^2} \frac{T}{V_t} \frac{2a^2}{3\pi} (\sin\theta - \theta\cos\theta) \quad . \qquad \text{(XII-13)}$$

Each Camera/Photometer will utilize an 18 mm f/0.9 lens with a transmission factor of 0.9. Optimum observations will be undertaken at solar angles of 135 deg. A film with characteristics equal to or better than Kodak 2485 will be utilized. Detection of particles will occur at densities of 0.1 above gross fog level. Such densities can result in an exposure of 4×10^{-4} mcs. Thus, equations (XII-2) and (XII-13) may now be solved using values commensurate with the proposed system and observational requirements. These values are:

$I_\odot = 1.365 \times 10^5$ lumens/m^2

$d_A = 0.02$ m

$F = 0.018$ m

$$T = 0.9$$

$$V_t = 1 \text{ m/s}$$

$$\theta = 135 \text{ deg}$$

$$E_f = 4 \times 10^{-4} \text{ mcs} \quad .$$

These values indicate that a 20 μ sized particle will be detectable at a distance of 18 m for solar angles of 135 deg. By focusing the camera to distances of less than infinity, smaller particles will be detected at critical distances of less than 18 m. This results from using equation (XII-1) throughout all calculations. The duration of image exposure, equation (XII-6), is modified to

$$t = \frac{d_A}{V_t} \frac{(r_o - r)}{(r_o - F)} \quad , \qquad \text{(XII-14)}$$

and equation (XII-13) becomes

$$E_f = I_\odot \frac{d_A}{F^2} \frac{T}{V_t} \frac{(r_o - F)}{(r_o - r)} \frac{2a^2}{3\pi} (\sin\theta - \theta\cos\theta) \quad . \qquad \text{(XII-15)}$$

Inserting the appropriate values into the equations indicates that if the focus is set at 30 m, a 16 μ sized particle will be detectable within the critical distance of 11.3 m. With the focus set at 18 m, the critical distance is reduced to 9 m and the threshold detection limit is 11 μ.

D. Brightness Measurements

In general, the surface brightness, or luminance, of a diffuse image such as that resulting from light scattered from a contaminant cloud is related to the intensity of the light received per unit area on a detector surface

(illuminance) by the expression

$$B = \frac{I}{W} \qquad \text{(XII-16)}$$

where B represents the surface brightness, I is the intensity of the light received in lumens/m^2, and W is the field-of-view in steradians. This intensity is modified, however, at the film plane of a camera by the placement of the fore-optics. The intensity at the film plane, I_f, may be expressed as

$$I_f = I_{\odot} T \frac{\pi d_A^{\,2}}{4} \frac{1}{F^2 W} \qquad \text{(XII-17)}$$

where T is the transmission of the lens, $(\pi d_A^{\,2})/4$ is the area of the lens aperture d_A, and $1/(F^2W)$ is the area of the image subtended on the film by a lens of focal length F. Combining equations (XII-16) and (XII-17), the surface brightness may be expressed as

$$B = \frac{4F^2}{\pi d_A^{\,2}} \frac{1}{T} I_f \quad . \qquad \text{(XII-18)}$$

Combining B into terms of solar brightness, $B/B_{\odot}$, where $B_{\odot} = 2.02 \times 10^9$ lumens/m^2 sr,

$$\frac{B}{B_{\odot}} = \frac{1}{2.02 \times 10^9} \cdot \frac{4F^2}{\pi d_A^{\,2}} \frac{1}{T} I_f \quad . \qquad \text{(XII-19)}$$

Since the value of exposure E on the film plane equals the product of the film plane intensity, I_f, and the duration of exposure, t,

$$\frac{B}{B_{\odot}} = \frac{1}{2.02 \times 10^{9}} \frac{4F^2}{\pi d_A^{\,2}} \frac{E}{t} \frac{1}{t} \quad . \qquad \text{(XII-20)}$$

By using the values set forth previously, the minimum brightness which can be detected is $2 \times 10^{-15}\ B/B_{\odot}$.

E. Data and Data Analysis

The data consist not solely of the photographic film, taken in stereo pairs, but also of charts of the photometer outputs and housekeeping signals such as a high-voltage monitor. The reduction of the photometer data is accomplished by visual technique. The film is developed to predetermined specifications which assure the maximum possible speed of the film without sacrificing dynamic range. Autoradiography may be used to enhance the image. The analysis of the film is performed in-house through the use of the Image Data Processing System (IDAPS).

The IDAPS consists of a terminal minicomputer (with its peripheral components) and a host computer. The host computer is an IBM 360/65 with 1 million bytes of core memory and 1.2 billion bytes of disk, plus a full complement of standard computer peripherals. The terminal minicomputer is a 65K byte Interdata Model 70 with two tape drives, a random access disk, a card reader, a line printer, and a teletype. Data can be input into the system by magnetic tape, cards, or film.

The interactive display and control equipment employs disk-refreshed digital television for real-time display of digitized images. The major components of this system include a digital television display generator, four video monitors, a user console keyboard, and a graphic trackball device. The digital television displays black-and-white images on standard resolution monitors at 64 levels of intensity, color images of over 4000 different colors, and color graphic/alphanumeric data in 8 different colors. The four television monitors include two black-and-white monitors, a color monitor, and a master monitor. The master monitor, together with the console keyboard, serves the user in controlling and monitoring his imaging-processing operations. While system-control information is being displayed on the master monitor, the user may view before-and-after results of his image-processing runs on the two black-and-white monitors. The color monitor is used when working with color data or

when color-coding black-and-white images. The user console keyboard is used for input of alphanumeric parameters and instructions and for initiating "special function" operators; thus, it serves as the primary man/machine interface. The graphic trackball interfaces with the digital television display to control a position cursor which is displayed on all video monitors to an accuracy of one picture element in the standard 480 × 640 array. Positional data may thus be transmitted to the minicomputer as the x and y locations of the cursor.

Autoradiography is a technique which provides significant gains in emulsion speed and sensitivity through post-processing intensification. These autoradiographs are made by exposure to radiation from the silver of a photographic negative that has been activated by nuclear methods. The original negative is thus reproduced with significant improvement in density and contrast.

F. Instrument Operation

Refer to the block diagram of Figure XII-3 for the details of the operation of the system.

Operation of the cameras commences with application of power to the units. Both cameras operate synchronously by means of special master/slave logic incorporated in each unit. Either camera can be designated as the master unit by appropriate external wiring connections made prior to launch.

At the time of camera activation, an internal clock is set to zero and commences to reckon time from that point. Exposures are made at 150 s intervals for durations determined by the integrating photometer. During each exposure the camera shutter is activated by a partial rotation of a stepping motor and used in a chopping mode. It operates once per second with an 80 percent open duty cycle. In this manner the motion of particles may be isolated and their rates determined. Upon termination of each exposure, the exposure duration in seconds and the elapsed operational time in minutes is recorded onto the edge of the film. This is accomplished by a miniature 7 segment LED display which is focused onto the edge of the film by a folded optical system. A green display is used to match the response of the film.

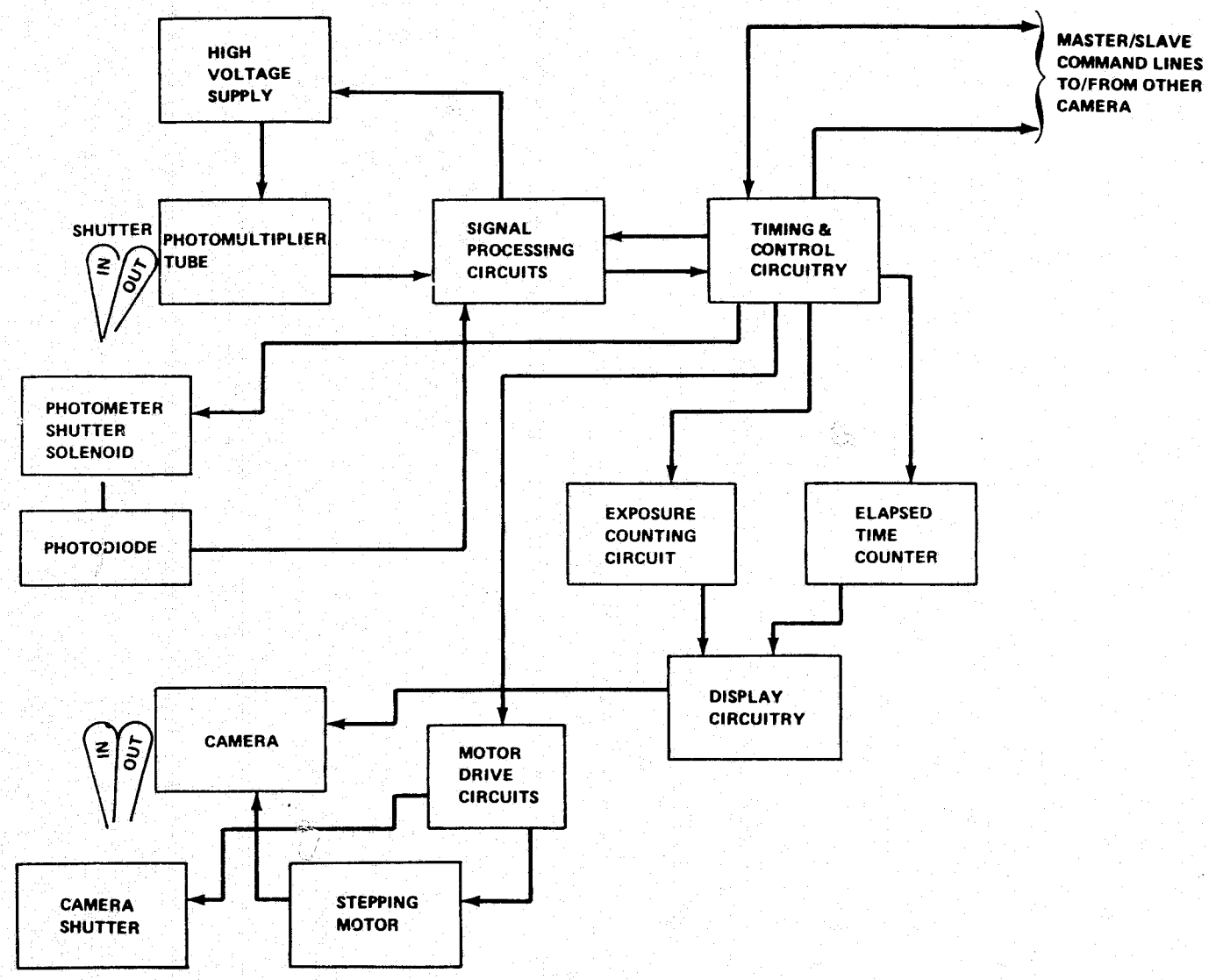

Figure XII-3. Operation of Camera/Photometer system.

INSTRUMENT SPECIFICATION SUMMARY
CAMERA/ PHOTOMETER

Physical Characteristics:

Total weight — 15.9 kg

Dimensions —
- Diameter — 32.39 cm
- Height — 53.89 cm

Power Requirements:

Film advance mode — 47.6 W/camera
Standby mode — 14.0 W/camera

Performance Data:

Data output — Film and recorded voltage levels
Sample rates —
- High-voltage monitor — 1 sample/10 min
- Temperature monitor — 1 sample/10 min
- Instantaneous photometer — 1 sample/s

Resolution — 20 μ particles on film

XIII. MASS SPECTROMETER (IECM10)

Rudolph C. Ruff

A. Objective

The Mass Spectrometer has been incorporated into the Induced Environment Contamination Monitor (IECM) to perform the required molecular column density measurements and molecular return flux measurements as identified by various concerned organizations and summarized in the IECM project plan. The required performance to yield the molecular column density is to be able to measure a collimated flux from 10^8 to 10^{17} molecules/cm^2/s/0.1 sr from 2 to 150 atomic mass units (amu). The required performance to yield the molecular return flux is to be able to measure down to 10^{10} molecules/cm^2/s, also from 2 to 150 amu.

The purpose of the Mass Spectrometer measurements is twofold. The first is to define the offgassing and outgassing molecules transported to surfaces in the Shuttle bay for correlation to actual deposition measurements on optical and temperature-controlled surfaces. The second is to define the gas cloud (induced atmosphere) through which optical experiments must look.

This instrument is designed to measure collimated flux with a view angle of 0.1 sr. This is beneficial in at least three measurements: (1) directional column density, (2) identification of gas scattering cross-sections when pointed in the vicinity of the velocity vector (ram direction), and (3) identification of contamination sources while looking back at the Shuttle from the end of the Remote Manipulator System (RMS).

B. Instrument Description

The Mass Spectrometer (Fig. XIII-1), which was developed by the Space Research Institute of the University of Michigan, is designed to measure the pressure (density) of all gases separated from 1 to 150 amu. To make this measurement, the instrument uses a high frequency voltage across four rods or poles to separate the various masses, hence the common name quadrupole mass spectrometer. The system consists of an ion source to ionize the neutral gas

ORIGINAL PAGE IS
OF POOR QUALITY

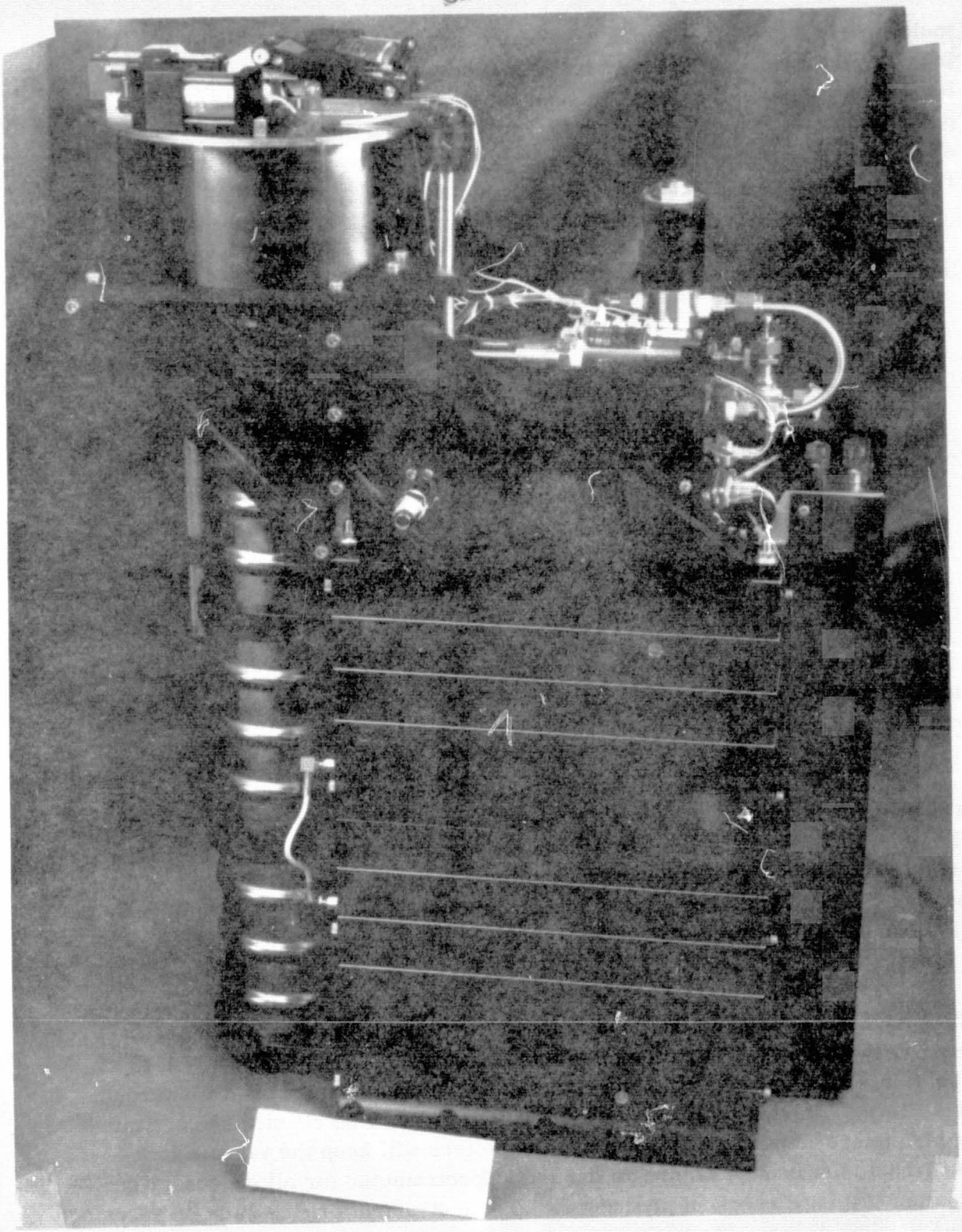

Figure XIII-1. Mass Spectrometer for IECM, Unit 1.

molecules with a regulated electron beam, an ion focusing system to direct the ions into the quadrupole "analyzer," the quadrupole section to "spiral off" all ions except those of the desired mass, an electron multiplier to create a current pulse for each ion which succeeds in passing through the quadrupole, and the electronics necessary to count the pulses and make the total count available for recording.

The selected mass is determined by the voltage and frequency across the quadrupole rods from the following equation:

$$M \propto Vac/f^2 \quad .$$

Typical values for this instrument are:

Mass, M = 150 amu

Rod voltage, Vac = 400 V peak

Rod frequency, f = 1.25 MHz.

Electronic logic built into the instrument will vary both the frequency and voltage in discrete steps to allow selection of each amu from 1 to 150 in succession.

To provide directional information about the source of gas molecules, a collimator is used to narrow the viewing angle of the instrument. The collimator (Fig. XIII-2) consists of three chevron baffles which deflect all off-axis gas molecules into a volume which contains a large number of sintered zirconium powder "getters." These getters adsorb gas molecules because of their very large surface area of chemically active materials.

To make meaningful measurements of neutral particles, the measuring instrument must outgas significantly fewer particles than those which one expects to measure. To accomplish this the quadrupole tube must be baked at 350° C in a good vacuum for several days and then sealed until on-orbit vacuum is achieved. During this bake period the getters are also cleaned and activated at high temperatures. After sealing, the getters will keep the vacuum in the quadrupole low enough to turn on the Mass Spectrometer for all necessary qualification tests and checkout procedures. The instrument orifice must be resealed

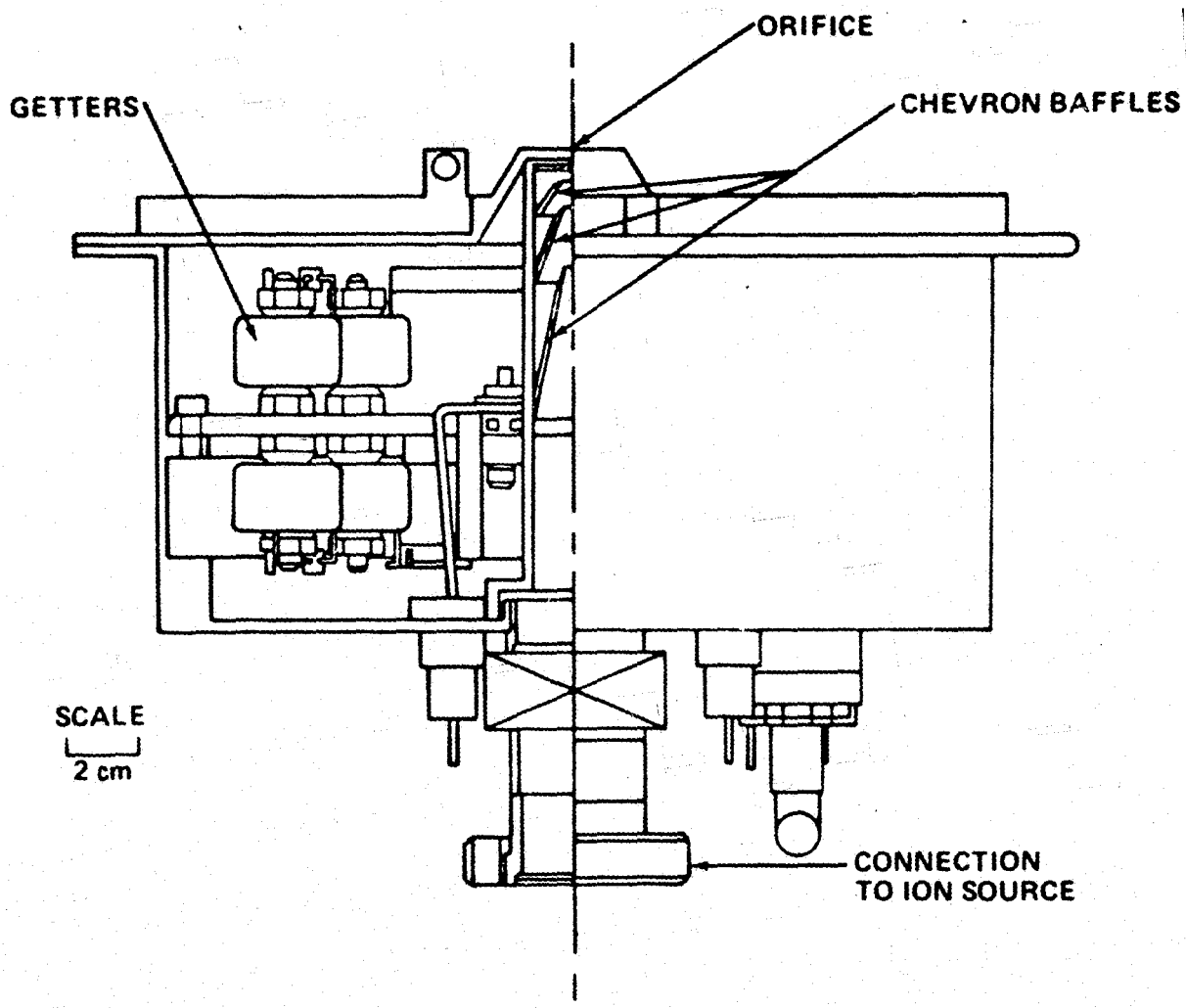

Figure XIII-2. Collimator design.

before reentry into the atmosphere to protect the electron multiplier from contamination during reentry.

The valve mechanism to meet the various mechanical and thermal requirements is shown attached to the top of the collimator in Figure XIII-1. The valve for prelaunch sealing (called opening valve) must be bakeable to 350°C and must, therefore, utilize a metal sealing ring under high compression. This compression force is generated by a ceramic rod. At the appropriate time after orbit is achieved, a solenoid is activated which releases a spring-loaded

arm. The momentum of this arm is used to break the ceramic rod. The metal cap holding the metal sealing ring is then released and swings away in a 180 deg arc to expose the Mass Spectrometer orifice to space. The closing valve does not not need to be exposed to the 350°C bake and, therefore, utilizes a rubber O-ring with much less compression force. Upon receipt of the proper signal from the IECM, a solenoid is again used to release the spring-loaded arm which holds the O-ring.

It is expected that, unless a large amount of contamination is encountered, the Mass Spectrometer will need minimal refurbishment between flights. This would consist of resealing the metal opening valve while under a nitrogen purge and then a simple bake to remove the large nitrogen gas load from the getters. The sealing mechanism after this and all other vacuum bake operations is a copper pinch-off tube.

A major contamination of the instrument, such as a valve malfunction or high pressure during a Shuttle bay door closing test, would require a major refurbishment which involves cleaning or replacement of the electron multiplier or actual dismantling of the quadrupole for cleaning.

To better relate the measured ion-source densities in the Mass Spectrometer on the IECM to the effluent densities and resulting column densities of contaminant gases, an inflight calibration will be performed. The calibration will consist of activation of a gas release system which will emit a known flux of isotopically labeled water and neon into the collimated view of the Mass Spectrometer; the backscattered flux will then be monitored. A sufficient quantity of the calibration gas mixture will be provided to permit a 45 min calibration during which the angle-of-attack of the Mass Spectrometer pointing vector will be varied between 0 and 180 deg. The gas release flow rate as a function of time is shown in Figure XIII-3. The relationship between the backscattered flux and the known effluent flux density as a function of angle-of-attack will thus be obtained. This will provide the calibration needed to interpret the measurements of Shuttle effluents. Moreover, these calibration measurements provide the basis for evaluating the differential scattering cross sections for 8 km/s collisions — a measurement of basic physical importance.

The calibration source will utilize a 350 cm^3 vessel pressurized to 10 atm of ^{22}Ne, with liquid water ($D_2{}^{16}O$) in sufficient quantity to maintain its vapor pressure [312 Pa (23.5 torr) at 25°C]. A total flux of approximately 3×10^{19} cm^{-2} s^{-1} is maintained by regulating the pressure to 3.1×10^4 Pa

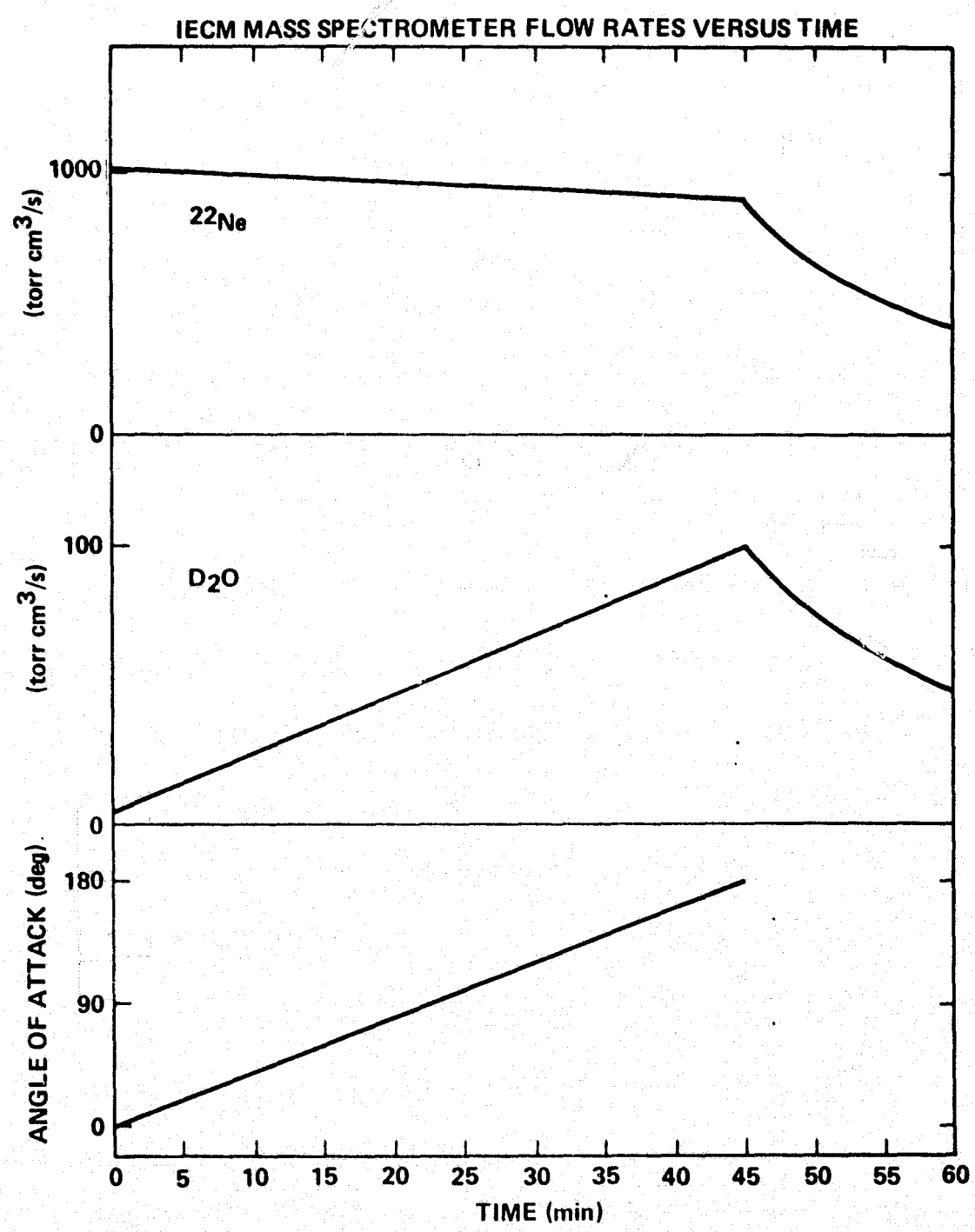

Figure XIII-3. Gas release flow rate as a function of time.

(4.5 lb/in.^{2}) and restricting the flow to 1.33×10^5 Pa cm^3/s (1000 torr cm^3/s) to a capillary array of 1 cm^2 cross-sectional exit area. The capillary array collimates the effluent to a 10 deg half-angle stream into the collimated view of the Mass Spectrometer. As the neon in the tank depletes, the ratio of water to neon will increase at a predetermined rate (Fig. XIII-3).

The calibration will be initiated by opening a solenoid valve upon command by the IECM. It is presently planned that the IECM will receive a signal from the Shuttle prior to the 45 min sweep of angle-of-attack. The IECM will also command the solenoid valve closed at some predetermined time greater than 45 min after initiation.

Figure XIII-4 is a simplified schematic of the final layout showing the relative sizes and orientation of the components previously discussed. One item not previously mentioned is an appendage pump. This pump also contains getter material for evacuating the quadrupole and electron multiplier. Both the appendage and the collimator getter material have been sized sufficiently large to handle the gas load generated on a mission of 100 h looking directly into the velocity vector.

The ion source is positioned in a "thermalizer" volume. Molecules which enter within the field-of-view are brought to thermal equilibrium through multiple collisions with the wall. The time constant of the thermalizer and orifice for reaching equilibrium density with the incident flux is approximately 1 s.

Figure XIII-5 is a block diagram of the Mass Spectrometer. All of the relevant control and data lines are shown at the connector to the IECM. VALVE CLOSE, SPECIAL MASS, and GAS CALIB are functions initiated by the IECM from either a pretimed sequence or a Shuttle-generated signal. WD1 and WD2 (word 1 and 2) are the critical signals sent from the IECM to the Mass Spectrometer which control the integration time (time spent counting pulses at each amu peak) and data transfer. BIT 1 through BIT 8 are the eight digital lines over which the actual data are transmitted. MASSFINE and MASSTOP are ground control signals not used by the IECM.

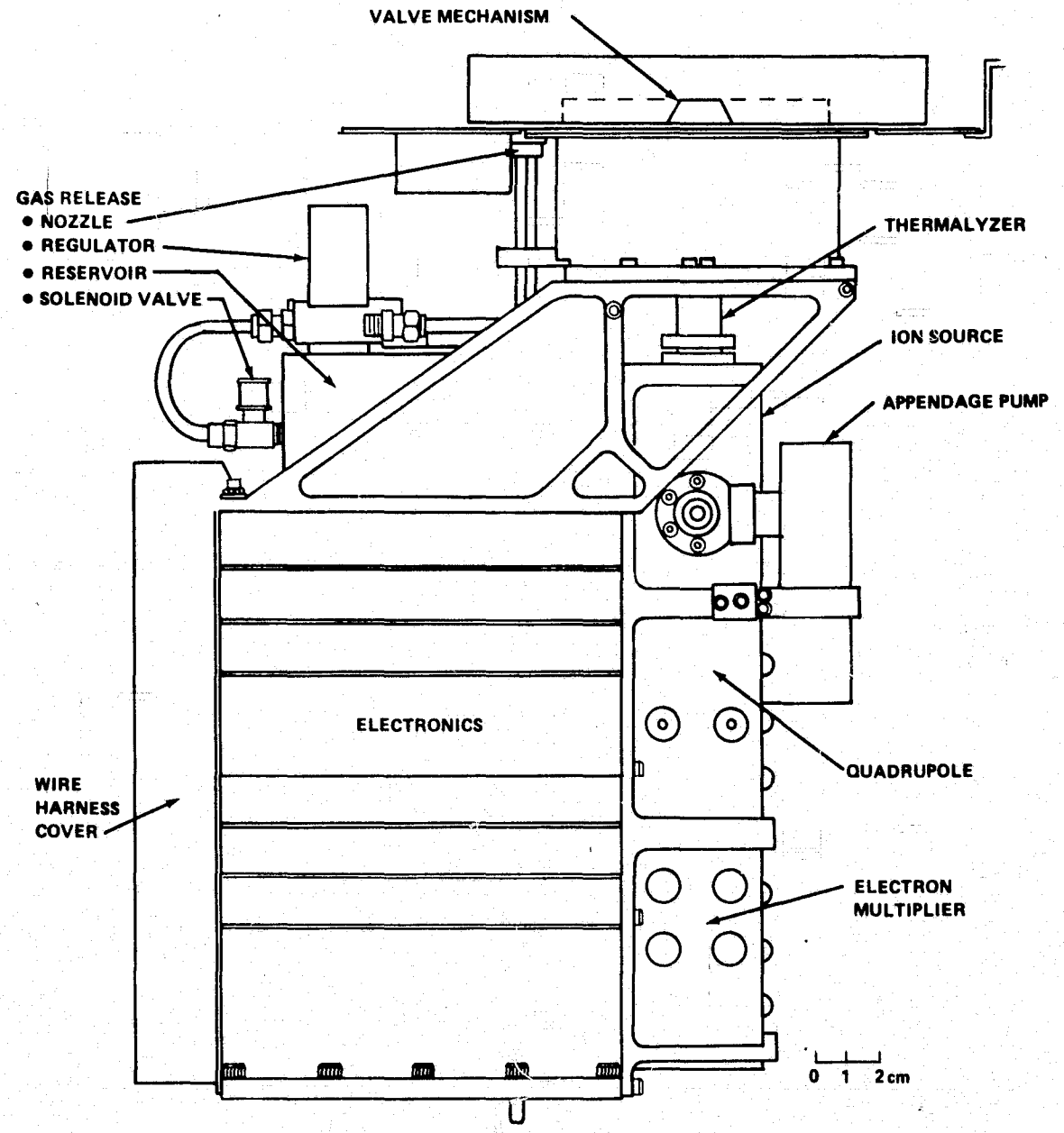

Figure XIII-4. Simplified schematic of final layout of Mass Spectrometer.

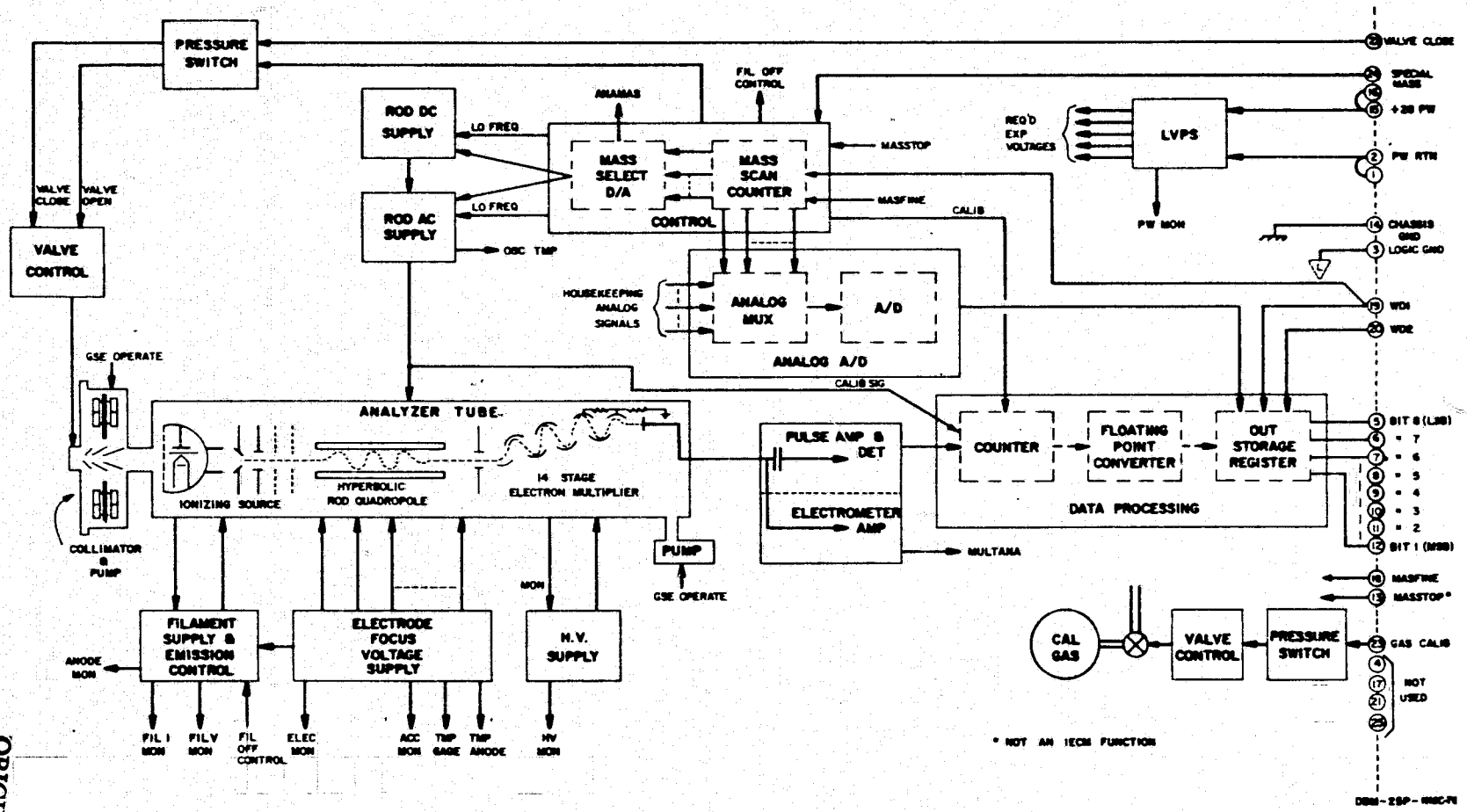

Figure XIII-5. Block diagram of Mass Spectrometer.

ORIGINAL PAGE IS OF POOR QUALITY

C. Instrument Operation

A typical flight operation sequence would be as follows.

1. Prelaunch. Since the Mass Spectrometer cannot be exposed to atmospheric pressure, four barometric pressure switches have been put in series-parallel with the valve control circuitry. This allows full operation of the Mass Spectrometer except for valve actuation. The IECM may exercise the Mass Spectrometer for a complete system test with no fear of inadvertent valve actuation.

2. Launch. The Mass Spectrometer is off; i.e., the IECM has not applied 28 Vdc power.

3. On-Orbit. Upon receipt of an appropriate signal or after a predetermined time, the IECM will apply power to the Mass Spectrometer and begin interrogating the Mass Spectrometer with timed WD1 and WD2 signals. The Mass Spectrometer will turn on in an orderly sequence, and the valve will open after approximately 24 s. From this point on the instrument will automatically step through its sequence of amu's and provide the data to the IECM. It is presently planned to have three modes of operation for the Mass Spectrometer, all controlled by the IECM.

The normal mode will be for the IECM to interrogate the Mass Spectrometer only once every 2 s; i.e., the pulse count for each amu will be integrated for 2 s. This not only limits the amount of data which needs to be recorded, but it also provides more counts for those masses with very low pressures. Under this normal mode the Mass Spectrometer will step through a complete sweep from 1 to 150 amu and then alternate with an equal number of steps on the water peak (amu 18). This feature was incorporated because of the importance of water as a contaminant for certain experiments utilizing the infrared spectrum and to try to determine the temporal fluctuation of the water cloud. It does, however, limit data on other masses to once every 10 min.

The fast-sweep mode is also generated by the IECM in simply speeding up its interrogation rate to once every 0.2 s. This is principally planned for the RMS mode where a faster response time is needed to identify contamination sources when the IECM is pointed at various surfaces. The double-sweep sequence remains in operation, but each mass is recorded every 1.0 min.

The special mass mode is really an abbreviated sweep mode. It is provided by a control signal to the Mass Spectrometer. In this mode the instrument only sweeps over the range from 1 to 48 amu. This mode was incorporated to provide a better time resolution during the gas calibration sequence. This mode can, however, be used independently and can be utilized in either the normal or fast-sweep mode.

4. Reentry. Before reentry begins, the IECM must send a signal to the Mass Spectrometer to close the orifice valve. The IECM expects to receive a signal from the Shuttle to initiate its reentry sequence.

5. Post-Flight. The instrument is removed from the IECM for refurbishment. It is planned that the Mass Spectrometer will be replaced with a second identical unit between all flights to allow several months for refurbishment in case of gross contamination.

D. Data

The data system consists of a 24 bit accumulator (16 777 215 counts) followed by a floating point converter. The maximum ion counting rate, considering both electronic limitations and a 50 percent statistical overlap, is 25×10^6 ions/s. The floating point converter compresses the data from 24 bits to 13 bits, consisting of 9 bits of linear number and 4 bits of multiplier, or decimal position. Nine bits equal 512 counts, which gives a digital resolution of 0.2 to 0.4 percent for all counts above 512.

Because the IECM data system is an 8 bit system, two 8 bit words will be given to the IECM processor every 2 s during slow sweep and every 200 ms during fast sweep. One of the 3 bits not used for counts will be used to "mark" the start of a sweep. Since the mass sweep starts at mass zero and indexes one mass each time the IECM accepts the 16 bits, no further data are required for automatic reduction of the measured mass.

The remaining 2 bits will be used to multiplex digitized analog housekeeping words. Four masses will be required to assemble one 8 bit housekeeping word. Thus, it is possible to have thirty-eight 8 bit words during one scan of 150 masses.

All event sequences in the Mass Spectrometer are governed by the IECM data read signals WD1 and WD2 which need to occur in precise sequence and timing. Specifically, the time between WD2 and WD1 needs to be controlled to better than 0.2 percent accuracy since it controls the count integration time for each amu.

At the completion of the flight, all mass counts and housekeeping data will be recorded on the IECM tape recorder together with sufficient time markers so that any data event can be referenced to the Shuttle timeline. An absolute requirement for significant data analysis is that each data point be capable of being related to the Shuttle attitude with respect to the velocity vector. Once this is accomplished, it will be relatively easy to make multiple charts of pressure versus time, attitude, Sun angle, etc., for any given amu.

The importance of knowing the Shuttle attitude comes from the fact that the measured gas density is highly dependent on scattering angle between outgassing molecules and the ambient molecules through which the Shuttle is moving.

As with any mass spectrometer data, much information about outgassing sources can be gained by looking at the complete amu spectrum. Various outgassing materials will be identified by looking for typical cracking patterns.

It is expected that several weeks after each flight the necessary correlations will have been made and reduced data will be available. Identification of specific outgassing source materials, if at all possible, may take longer, depending upon the complexity of mixtures and cracking patterns. Comparison of data from flight to flight is expected to give an indication of the trend of Shuttle and Shuttle bay cleanliness.

E. Technical Summary

The Mass Spectrometer weighs 12.7 kg (28 lb), with dimensions of 20.3 cm (8 in.) wide by 30.5 cm (12 in.) deep by 45.7 cm (18 in.) high. The instrument draws an average of 16 W of electrical power during normal operation, with higher power losses during activation of various solenoid values.

The Mass Spectrometer has a sensitivity of 1 count/s for every 500 molecules/cm^3 in the ion source. The maximum density in the ion source will

occur when looking directly into the velocity vector. Under this condition and using appropriate values for ambient gas density at orbital attitude, one would get 50×10^6 counts/s for O_2 and 64×10^6 counts/s for N_2. This is above the maximum calibratable rate of 25×10^6 counts/s. However, pointing several degrees away from ram direction will drop the counting rate to a manageable value.

The requirement to be able to measure a collimated flux down to 10^8 molecules/cm^2/s/0.1 s will produce a count (assuming flux is water) of 5.7 counts/s with a statistical uncertainty of 2.5 counts/s. Although this accuracy is low, it should be noted that the data analysis procedure can reduce the uncertainty by combining several successive sweeps to increase the sensitivity. Also, the normal data rate is for 2 s integration period.

INSTRUMENT SPECIFICATION SUMMARY
MASS SPECTROMETER

Physical Characteristics:

Total weight — 12.7 kg

Dimensions —
Total instrument — 33 × 19.7 × 43 cm

Power Requirements:

All active modes — 16 W
Standby mode — 0 W (Off)

Performance Data:

Data output — Record digital counts proportional to partial pressures
Sample rates — 0.5/s slow scan
5/s fast scan
Resolution — ±1 count
Accuracy — 0.2 to 0.4 percent for any counting rate above 512 counts/s

XIV. IECM SYSTEMS AND THERMAL DESIGN

Marion L. Teal and Larry W. Russell

A. IECM Mechanical and Thermal Design

An overall view of the Induced Environment Contamination Monitor (IECM) as designed for the Orbiter Demonstration Flight Instrumentation (DFI) is shown in Figure XIV-1. The top panel has the necessary openings to provide proper instrument viewing angles. The outline reference dimensions are indicated on the figure. Specific instruments and supporting subsystems are located in the IECM as depicted in Figure XIV-2. All components are mounted with consideration of easy access for disassembly in relation to instrument and system refurbishment. The majority of the components are hard-mounted to a thermal baseplate with supporting angles and brackets as necessary.

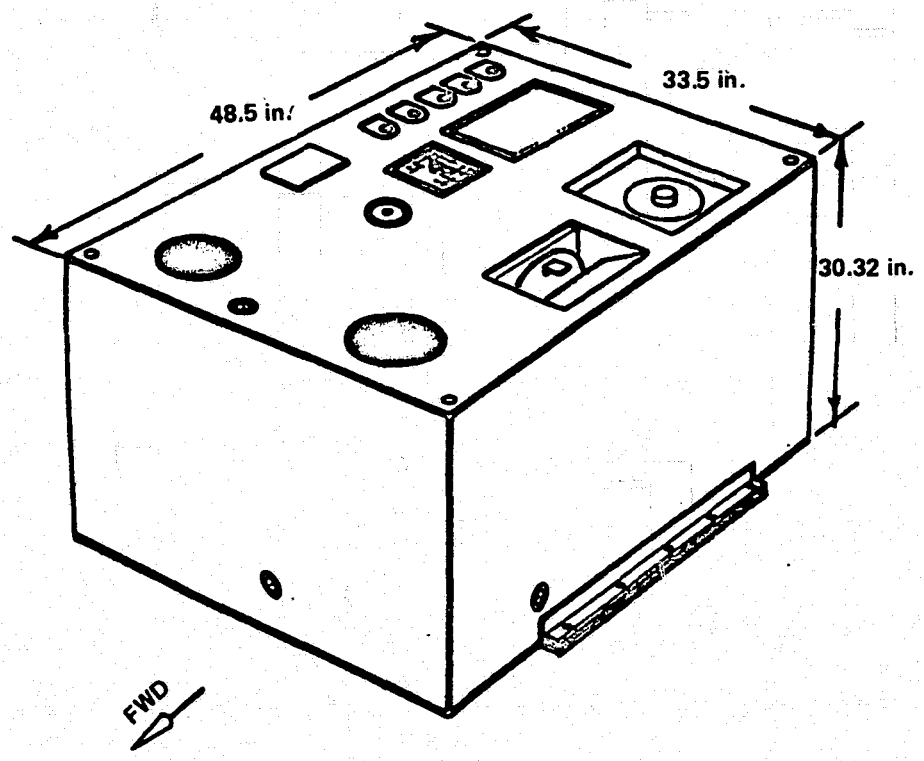

Figure XIV-1. IECM for DFI.

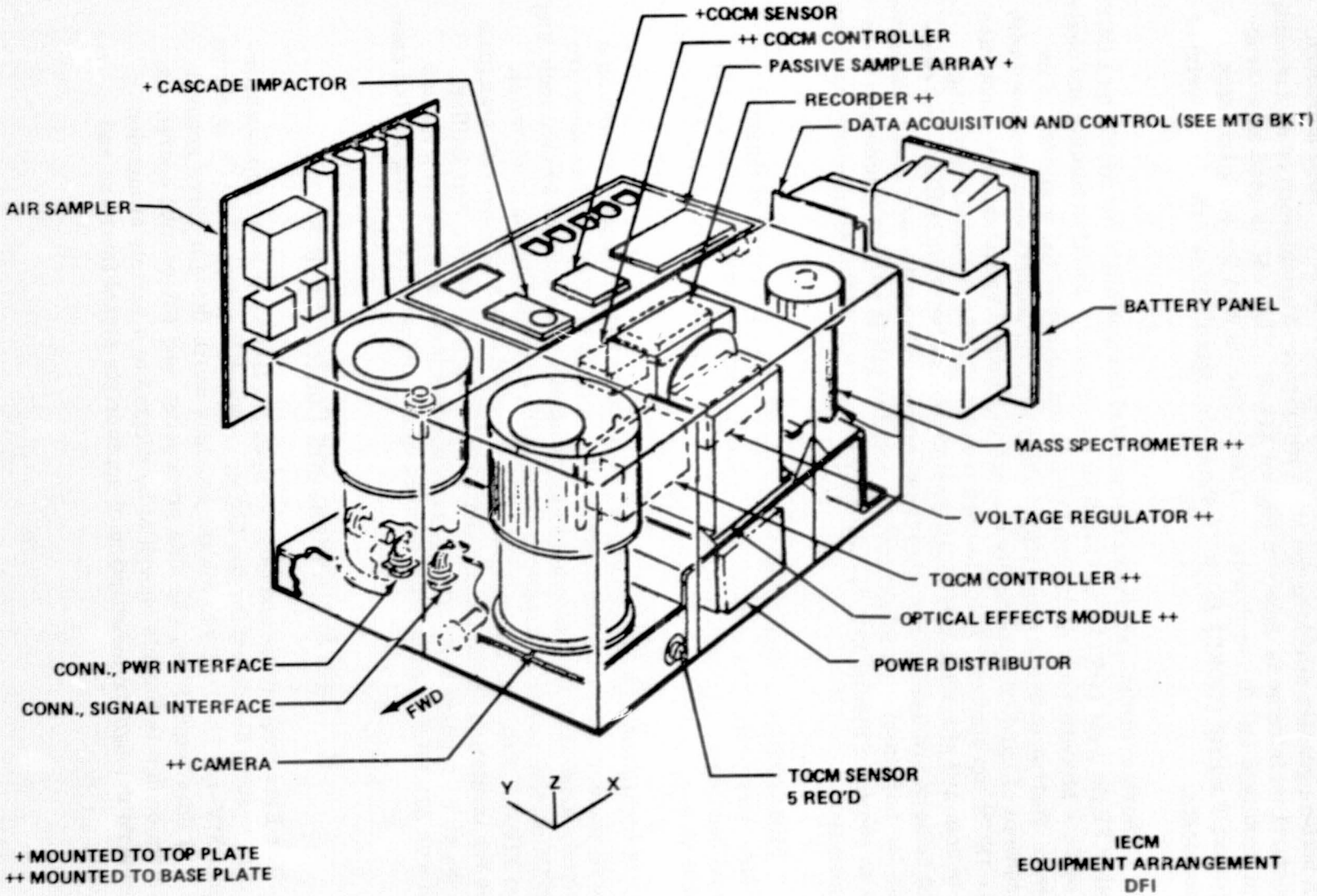

Figure XIV-2. IECM/DFI component location.

The basic mechanical design incorporates tubular extruded aluminum with bolt-on gussets attaching the main members. A photograph of an assembled structural mainframe is shown in Figure XIV-3. This unit is used as a structural prototype and fit check unit. An isometric view of the Long Duration Exposure Facility (LDEF) IECM is shown in Figure XIV-4 with the associated instruments.

Thermal design requirements included compatibility for flights on LDEF, Orbiter Flight Test (OFT), and two Spacelab flights. Passive cooling and heating by 28 V heaters were dictated as design guidelines at the beginning of the project. Instruments and supporting subsystem components were designed with the concept of hardware thermally shorted to a heated baseplate with conduction to the IECM top surface, which is coated with S13G-L0 for passive cooling. The bottom and sides are thermally insulated with aluminum baffles, and electrical heaters are used to maintain temperatures during the cold case. Requirements for Demonstration Flight Instrumentation (DFI) vehicle orientation were used as shown in Figure XIV-5. Mission 4 was used as the worst-case condition for analysis.

Figure XIV-6 indicates the hardware design as a result of thermal analysis. Key design features resulting from thermal analysis include: (1) thermal baseplate, (2) resistive heaters, (3) separate battery plate, (4) thermal panels, and (5) camera covers.

A highly conductive 0.95 cm (3/8 in.) aluminum baseplate serves as a mounting plate as well as a key thermal design factor. Electrical heaters are selectively located on the baseplate to allow up to a maximum of 300 W, including the IECM normal power dissipation. A drawing of the baseplate is shown in Figure XIV-7. External thermal panels are coated with S13G-L0 with aluminum baffles for insulation on the bottom and sides. The bottom has four baffles, while the sides require two. The camera/photometers incorporate a shutter coated with S13G-L0 to reduce the camera upper temperature during the hot case.

B. Data Acquisition and Control System

The Data Acquisition and Control System (DACS) is a microprocessor-based data system developed for the IECM. A block diagram of DACS is shown in Figure XIV-8. The DACS hardware provides capabilities in three general areas: (1) data acquisition, (2) data processing, and (3) control operations. The system design is flexible enough to be adapted to a variety of mission requirements through the substitution of appropriate signal interface and

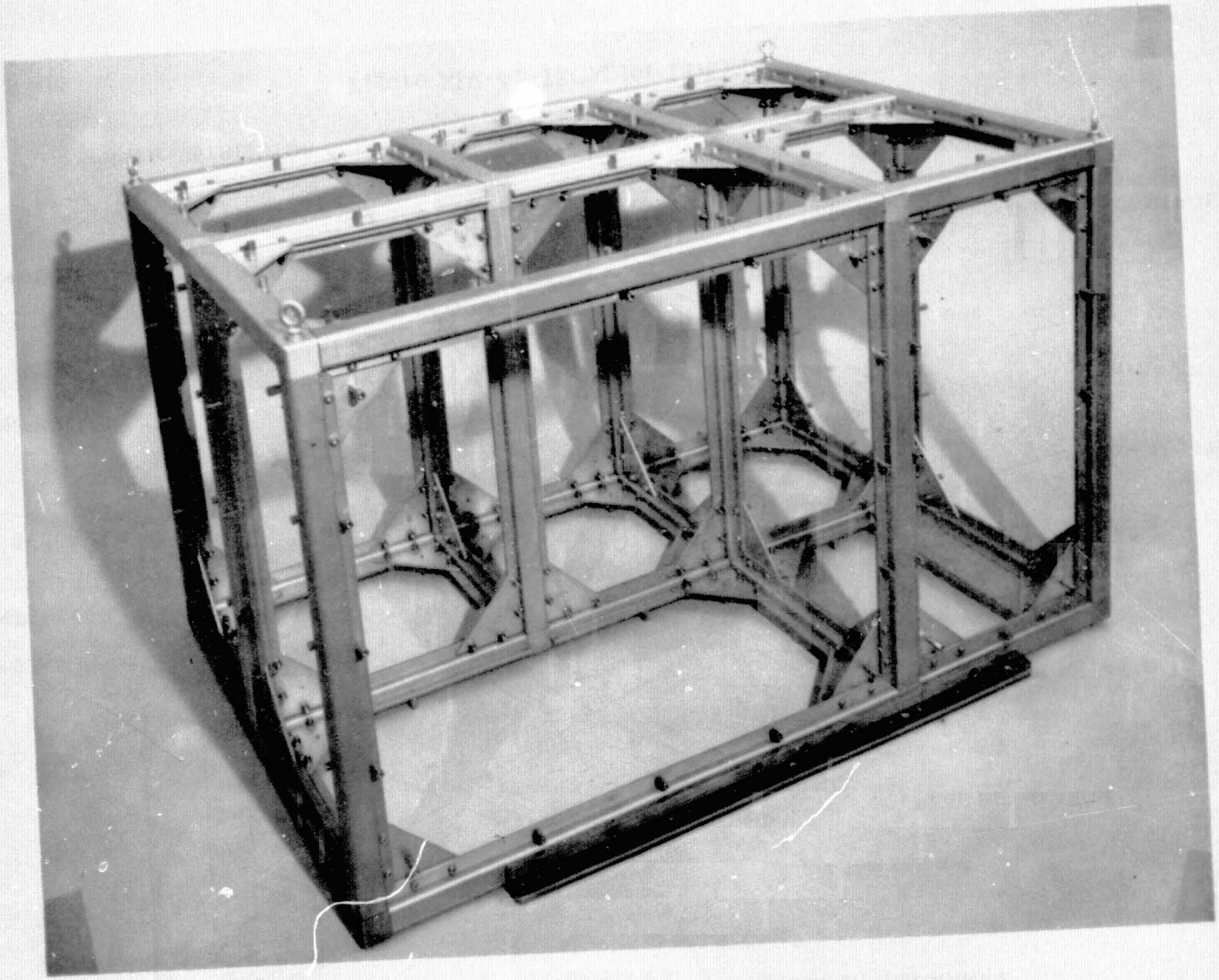

Figure XIV-3. IECM basic structure.

ORIGINAL PAGE IS
OF POOR QUALITY

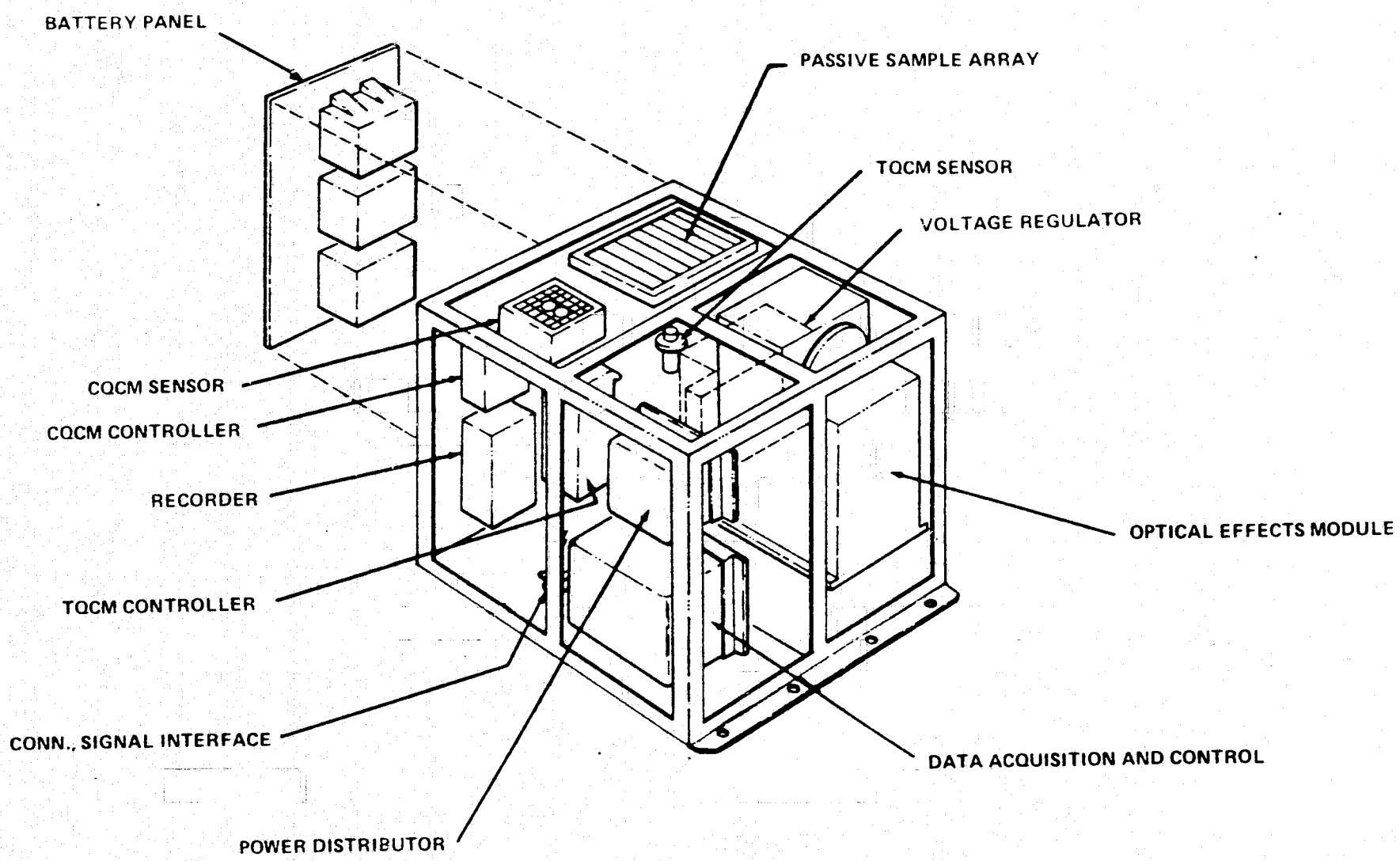

Figure XIV-4. IECM for LDEF.

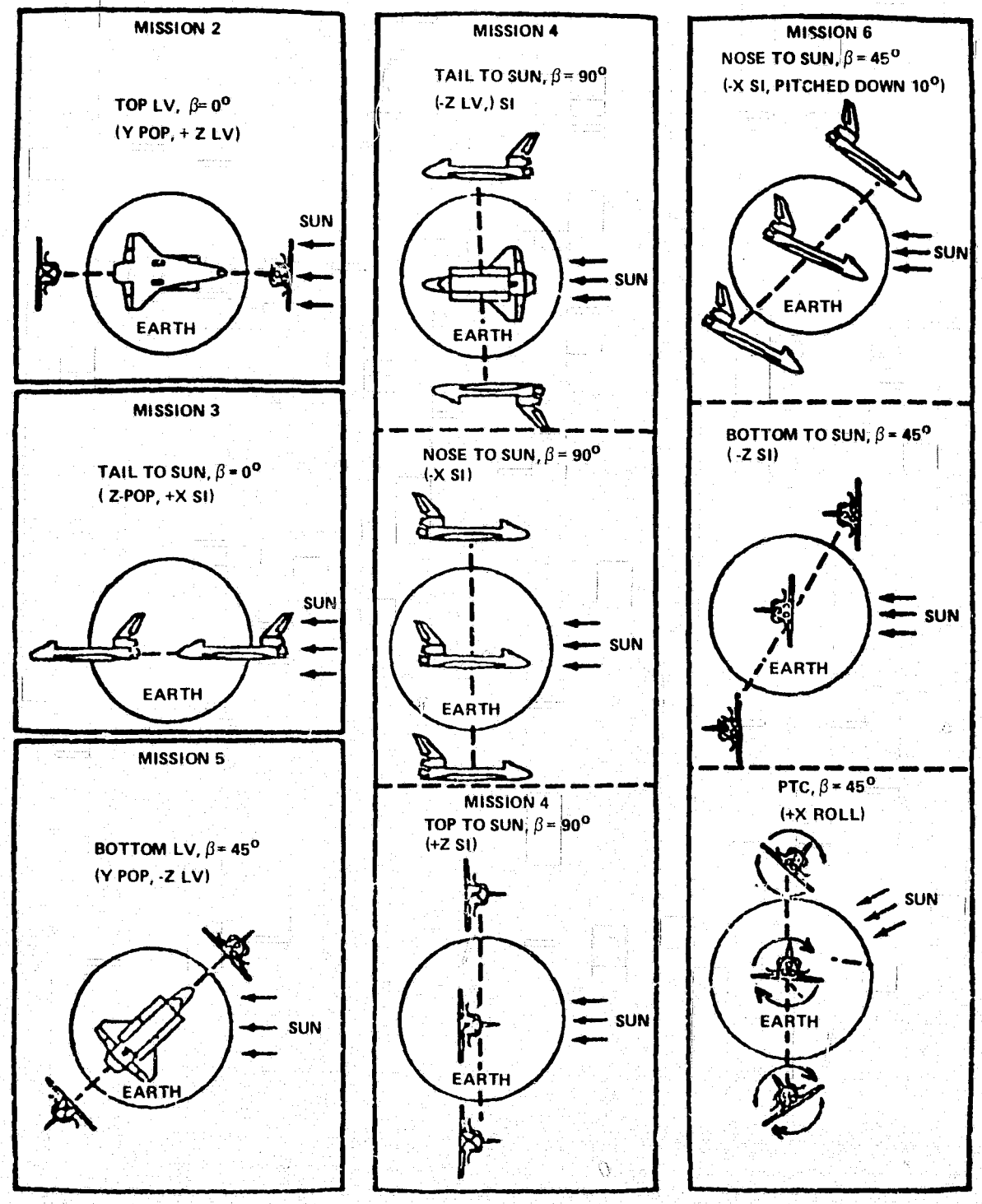

Figure XIV-5. OFT thermal attitudes.

ORIGINAL PAGE IS
OF POOR QUALITY

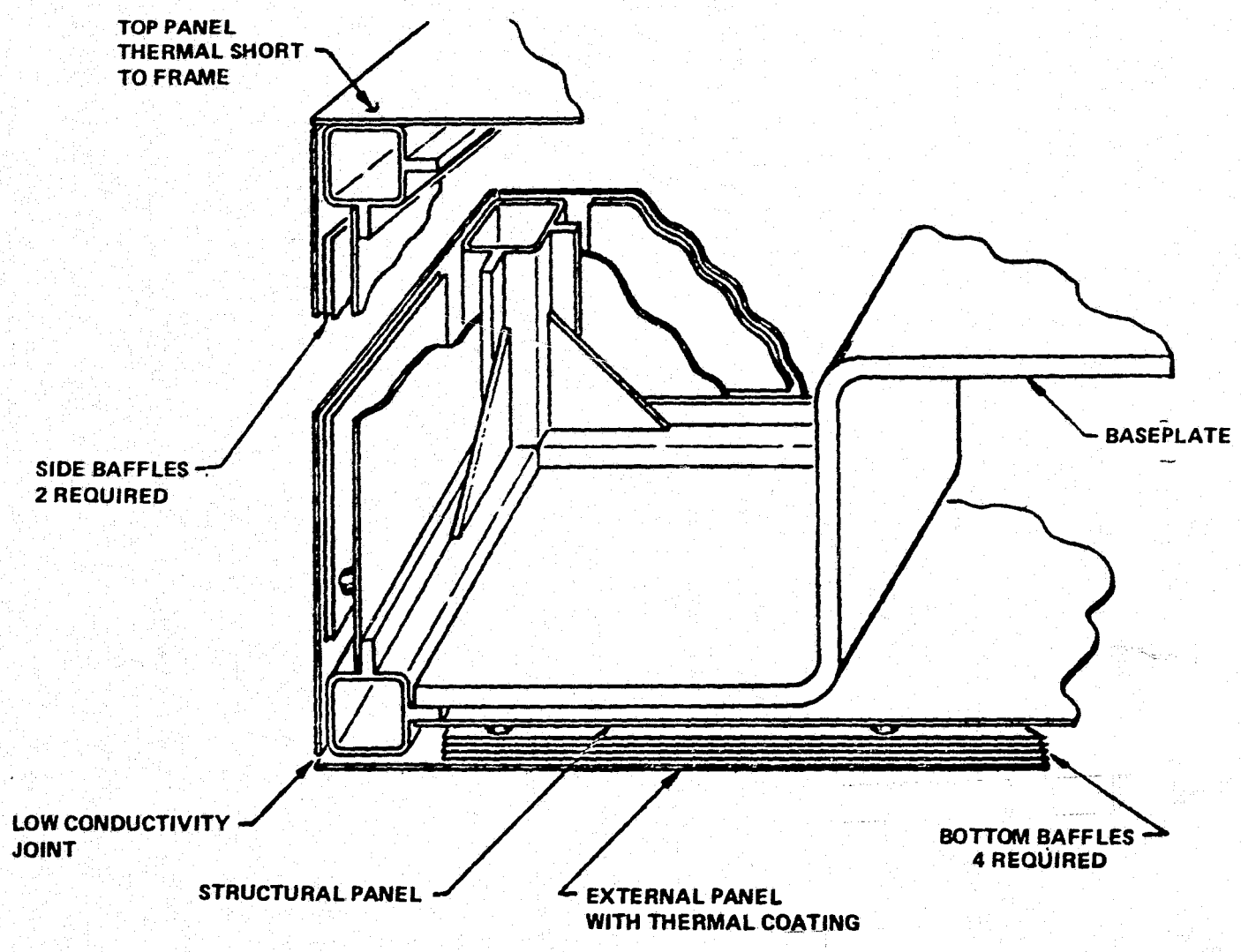

Figure XIV-6. IECM thermal design for DFI.

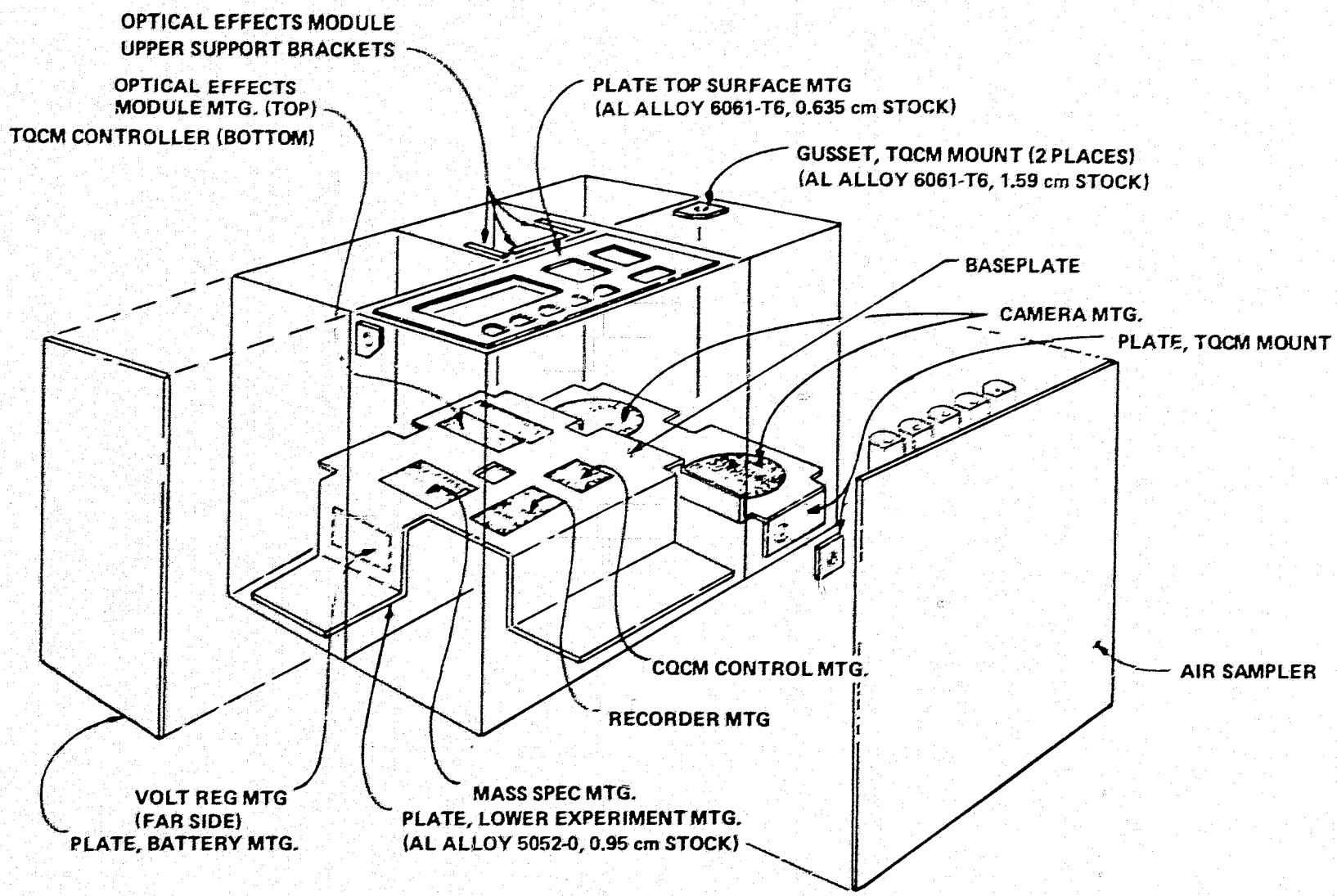

Figure XIV-7. Thermal baseplate.

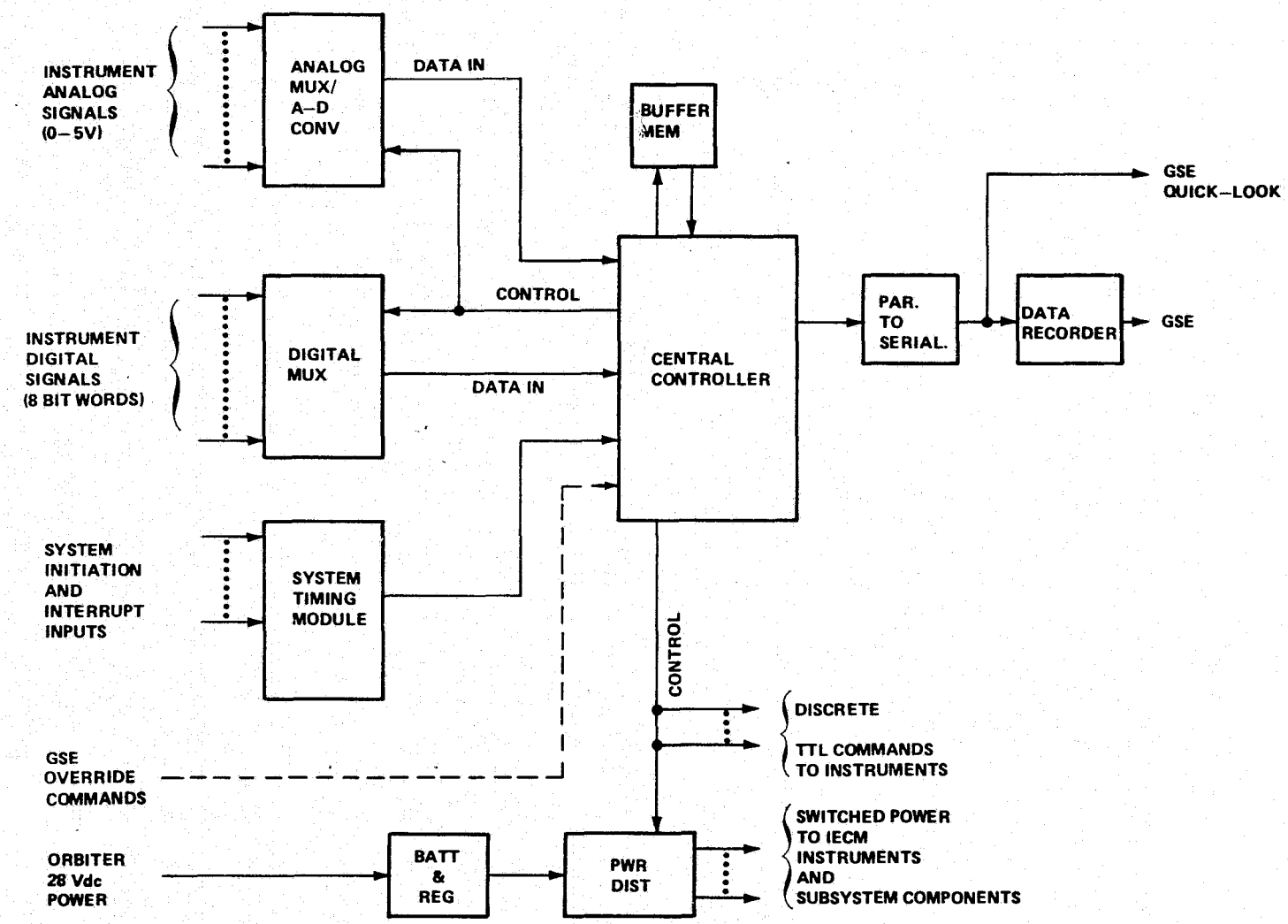

Figure XIV-8. IECM data acquisition system.

ORIGINAL PAGE IS OF POOR QUALITY

memory cards. In addition to the standard complement of DACS cards, the system architecture and mechanical design have been implemented to easily accommodate special function cards to tailor the system for specialized applications. A tabulation of the standard and special DACS boards is given in Table XIV-1.

TABLE XIV-1. IECM DATA ACQUISITION AND CONTROL SYSTEM

STANDARD CARDS
CPU
PROM
2K RAM
I/O Interface
Discrete Multiplexer
Analog Multiplexer
A/D Converter
Power Supply
SPECIAL CARDS
Tape Recorder Interface
GSE Interface
Cascade Impactor Interface
External Command Interface

Data acquisition capability is furnished for both analog and discrete signal sources. The DACS analog subsystem consists of two card types: (1) a 64 channel analog multiplexer card and (2) a 12 bit analog/digital (A/D) converter card. Discrete signals are handled by either the 64 channel digital multiplexer card or the 72 channel programmable I/O card. The card types may be mixed to simultaneously provide both analog and discrete capability. Analog data processing is further enhanced by the multiple data ranges of the A/D converted card. The A/D card contains a programmable gain amplifier offering seven gain ranges. In addition to the gain ranging, the A/D converter may be operated either bipolar or unipolar, with inputs of ±2.5, ±5, and ±10 V for bipolar operation, and +5 and +10 V for unipolar operation.

The data processing capability of the DACS includes data accumulation, data blocking (formatting), data point compression, time correlation, and data storage. With sufficient memory capacity the microprocessor is able to acquire, examine, process, and store any data point or combination of data points.

The system architecture will allow the user a maximum of 64K bytes of memory capacity. Memory is currently implemented with two standard cards, a 16K byte PROM card and a 2K byte RAM card. The PROM cards can be obtained with three different chip technologies: (1) ultraviolet eraseable PROM, (2) fisible link PROM, or (3) mask programmed ROM. The PROM card capacity is also expandable from 1K byte to 16K bytes in 1K byte increments.

To complement the two existing memory cards, a larger capacity RAM card is currently being considered for development. This large capacity RAM will be either 8K or 16K bytes.

The control operations are performed by the DACS through the I/O cards and special function cards. Control operations may be initiated by several conditions. The basic methods of initiating control operations are: (1) time sequence initiated operations, (2) external interrupt initiated operations, and (3) data initiated operations. The approach to initiating control and data operations allows the DACS to use any type of input event (interrupt, analog data, digital data), in addition to the central processing unit real-time clock, to control program selection.

The mechanical design of the DACS features proven space environment packaging implemented with plug-in cards. Low-cost housing components, double-sided printed circuit boards, and standard interface harness cables have been utilized to minimize production costs. All electronic circuitry is mounted on plug-in cards to allow easy replacement for component repairs and system modifications. The large number of available external interface pins (approximately 630) allows the DACS package to be used in numerous applications involving data sampling and control operations.

The DACS and the power distributor are being built by SCI Systems, Inc.

C. Tape Recorder

The flight data from the IECM instruments will be stored in an on-board tape recorder. The tape recorder is a Lockheed Electronics Company Model 4200 with a total storage capacity of approximately 40 million bits. The IECM

data is buffered, blocked, and formatted by the DACS and is then fed serially to the tape recorder in 4 s bursts at a 4 Kbit rate. This type of tape recorder will also be used on the Thermal Control Surfaces Experiment (TCSE) to be flown on the LDEF mission.

D. Electrical System

The primary components of the IECM electrical system are the power distributor, the voltage regulator, the internal storage batteries, and the interface to the Orbiter 28 Vdc power bus. The IECM has the capability of receiving electrical power from either the Orbiter power bus or its own internal batteries. This capability is necessary since the Orbiter power, which is the primary power for the IECM, is not available during certain critical phases of the mission when it is desired to have the IECM operational, requiring a switch to battery power. The 28 Vdc regulator is being supplied to the IECM program by Marshall Space Flight Center's Electronics and Control Laboratory, as are the IECM batteries. The power distributor, operating under the direct control of the DACS, accomplishes all the required input power switching and the distribution of switched, fused power to each IECM instrument. As mentioned previously, the power distributor is built by SCI Systems, Inc. The IECM batteries, built by Eagle-Pitcher, were originally designed for use on the Solid Rocket Booster (SRB) program. The normal complement of three batteries (18 A-h each) are dioded together and mounted to the IECM thermal baseplate. The batteries have sufficient capacity to provide power for IECM operation during the normal ascent, descent, and post-landing phases of the flight and also for RMS/IECM activity planned for one of the OFT missions. A typical IECM power profile for an OFT mission is shown in Figure XIV-9.

E. Calibration and Testing of the IECM

Testing of the IECM hardware will be accomplished by Marshall Space Flight Center and the integration contractor as prescribed by the detailed test procedure.

The lead engineer is responsible to see that the IECM as a system is qualified to design specification 61M10027.

The following tests will be accomplished on the IECM at the system level: (1) prequalification acceptance test, (2) operational temperature test, (3) nonoperational temperature test, (4) humidity test, (5) thermal vacuum test, (6) vibration test, (7) acoustic test, (8) electromagnetic compatibility test, (9) contaminant outgassing test, and (10) flight acceptance test.

ORIGINAL PAGE IS OF POOR QUALITY

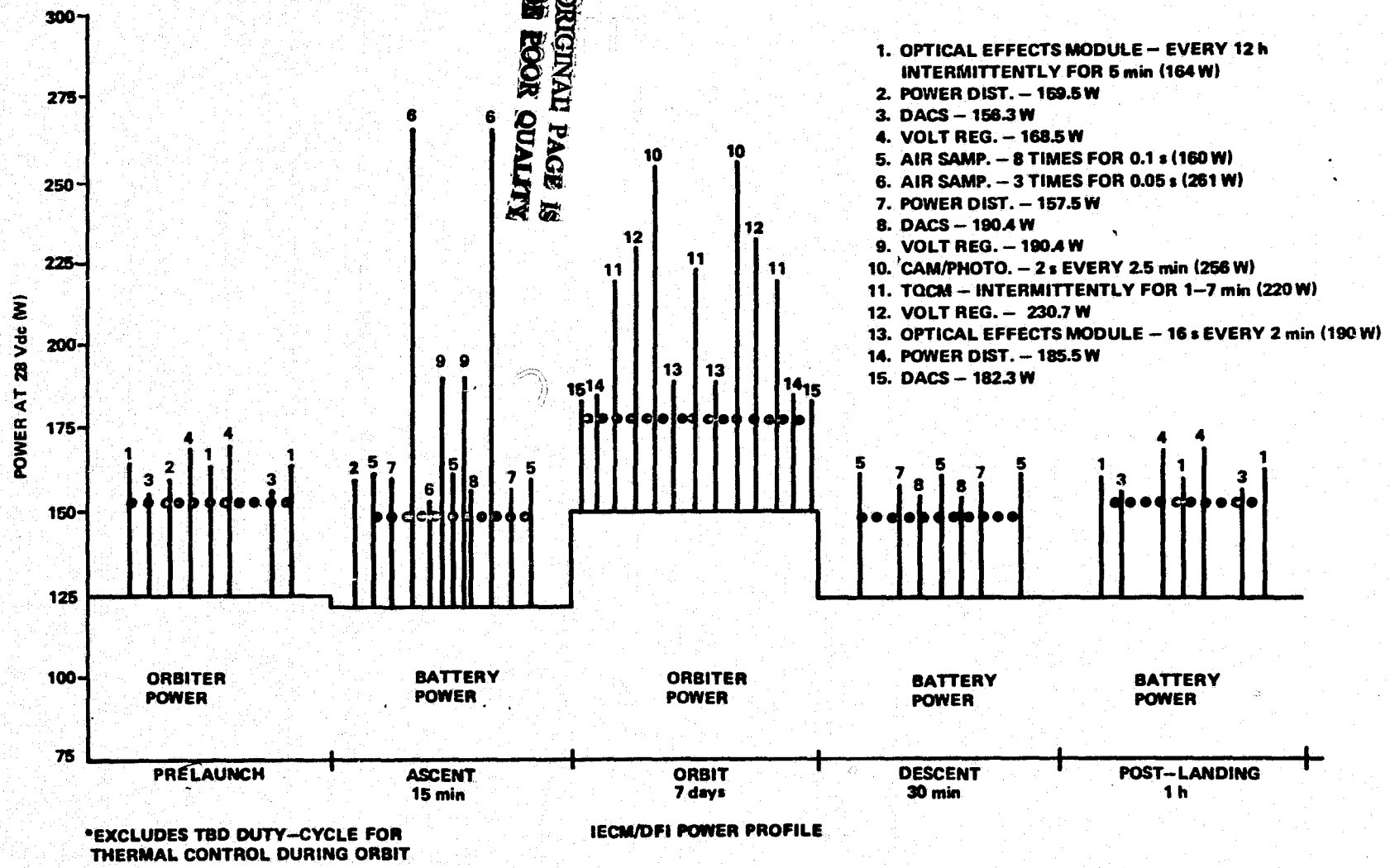

Figure XIV-9. Typical IECM power profile for an OFT mission.

An operational function test will be performed between each test and during specific tests to verify instrument performance to specification. A visual inspection will be accomplished after each test.

A test report will be generated by the testing organization at the conclusion of the testing of each instrument and a system test report at the conclusion of the system test.

Each instrument scientist is responsible for the calibration and qualification of his instrument prior to delivery to the integration contractor.

IECM SYSTEM SUMMARY

Physical Characteristics:

Weight — 781 lb
Dimensions — 48.5 × 33.5 × 30.25 in.
Structure material — Aluminum

Electrical:

Power — Orbiter or IECM batteries nominal power dissipated is 150 W at 28 Vdc. Maximum power, including thermal, is 300 W
Battery capability — Three lithium 18 A-h, for total of 54 A-h at 28 V
Data system — 128 analog channels, 256 discrete inputs, 144 discrete outputs, 2 serial ports, programmable memory, 3.4×10^7 bits total data storage

Thermal:

Temperature range — IECM baseplate is conditioned from 0 to 70°C
Cooling — Passive utilizing S13G-L0 thermal coating
Heating — 28 V electrical heaters thermally controlled by the data system

XV. PREFLIGHT AND GROUND OPERATIONS

Charles W. Davis

The Induced Environment Contamination Monitor (IECM) experiment package will have ground support equipment (GSE) that will fulfill all the expected requirements for ground operations. The handling equipment will consist of a shipping container, a truck pallet, and a 907 kg (2000 lb) capacity portable crane. The truck pallet will be used for moving the IECM while in the laboratory. It will have a hydraulic lift so that the IECM can be lifted 15 cm above the floor for gaining access to the bottom of the package. The crane will be used for moving the IECM between the shipping container and the truck pallet and for other tasks as required.

The electrical GSE for the IECM will consist of several components mounted in a modular electronics desk. The components of the desk will include an Intel microcomputer development system with 64K bytes of RAM, and Intel dual floppy diskette operating system, a PROM eraser and programmer, a Texas Instruments Silent 700 terminal, a Lear Siegler CRT, a Lamda power supply, and reproduce electronics for the IECM tape recorder. The desk when loaded with its components will weigh approximately 363 kg (800 lb).

The electrical GSE will be able to simulate all IECM system interfaces to the Data Acquisition and Control System (DACS), in addition to being able to test and operate the IECM after the DACS is integrated. Thus, the GSE will be used for testing the DACS before it is integrated and for testing the IECM after the system integration is complete. After testing is completed, the GSE can be used for taking data from the IECM instruments via the DACS. That is, the DACS will control the IECM and take the data; after collection, the data will be transmitted to the GSE. Ground data that are collected will be stored on floppy diskettes.

The GSE will also be used for the development of flight software for the IECM DACS and other software as required. The developed software will be transferred in the DACS memory for flight.

The IECM will be refurbished and prepared for flight at Marshall Space Flight Center and then shipped to Kennedy Space Center for installation in the Orbiter. The GSE will be used to perform a functional test on the IECM before

the package is installed in the Orbiter Processing Facility (OPF) building. Once installed in the Orbiter, the GSE will be linked to the IECM through a T-0 interface. This interface will allow the testing of Orbiter interfaces, testing of the IECM, and prelaunch data collection. Access to the T-0 umbilical will be available in the Mobile Launch Platform (MLP). Therefore, the capability is available to take data while the Orbiter is in the OPF and on the MLP. This capability will not exist while the Orbiter is being moved or while it is in the Vertical Assembly Building (VAB), nor will physical access be allowed during these times.

The exact amount of data to be collected during prelaunch has not been determined, but it is expected that data will be collected through the T-0 interface during major events, such as before movement of the Orbiter to the VAB. When data are collected, the following instruments will be operated: Optical Effects Module, Temperature-Controlled Quartz Crystal Microbalance, Cascade Impactor, Dew Point Hygrometer, and Humidity Monitor. Also, the pump on the Air Sampler will run, and bottle No. 1 will be changed at some interval to be determined. Sample trays on the Passive Sample Array will be changed out before major events, with the last change coming at the last physical access to the IECM.

Access to the IECM will be provided when the Orbiter bay doors are open. At the last access before flight, the instrument covers will be removed, pyrotechnics will be armed, and final system preparations will be made.

The IECM will continue in the descent mode for 1 hour after the Orbiter lands. At the first access after flight, the following will be done:

1) The entire Passive Sample Array will be removed and packaged for shipment to Marshall Space Flight Center. A new Passive Sample Array will be installed for Orbiter landings at Edwards Air Force Base.

2) The bottles in the Air Sampler system will be capped.

3) Covers will be put on instruments except for the Passive Sample Array.

4) Pyrotechnics will be disarmed on the Air Sampler.

5) The main power switch on the top of the IECM will be moved to off.

Later, the IECM will be returned to Marshall Space Flight Center for refurbishment, which will include dumping the tape recorder. For details on refurbishment, see the IECM refurbishment plan. For more details on ground operations, see the IECM/OFT ground operations plan.

XVI. FLIGHT OPERATION AND DATA REDUCTION

Marion L. Teal and Charles W. Davis

A. Flight Schedule

The Induced Environment Contamination Monitor (IECM), mounted on the Development Flight Instrumentation (DFI) pallet, will fly on all six Orbiter Flight Tests (OFT's), on the Long Duration Exposure Facility (LDEF), and on the first two Spacelab flights. A milestone schedule for the IECM is shown in Figure XVI-1.

B. Flight Operations

In flight, operations of the IECM may be described relative to the programs OFT, LDEF, and Spacelab.

1. OFT. Two modes are planned for the IECM during OFT's: fix-mounted to the DFI pallet and maneuverable by the remote manipulator arm. OFT's 1, 2, 5, and 6 are missions with the IECM fixed on the DFI pallet. Ascent, on-orbit, and descent are the three operational phases for the fixed mode. The instruments that are operative during the different mission phases are shown in Figure XVI-2. A high data rate command puts the Mass Spectrometer in a high data rate mode in addition to selected instruments continuing to operate as defined under the on-orbit mode. The high data rate command is activated by the Orbiter crew. This command is also used to turn the Mass Spectrometer "on" or "off" as preprogrammed in the data system. Ascent, on-orbit, and descent commands are preprogrammed Orbiter-issued commands. Post-landing data are taken for 1 h after touchdown in the same mode as descent.

The Remote Manipulator System (RMS) mode is an operational mode, in addition to ascent, on-orbit, and descent, that is performed during OFT missions 3 and 4. The RMS mode allows the IECM to perform contamination mapping in and around the Orbiter to the extent of maneuverability of the Orbiter RMS. Instruments that are operational are indicated in Figure XVI-2. The IECM is designed for a 4 h RMS mode of operation.

2. LDEF. The IECM scheduled for flight on the LDEF includes the Passive Sample Array, Optical Effects Module, Cryogenic Quartz Crystal Microbalance, and five Temperature-Controlled Quartz Crystal Microbalances.

5 YEAR

CENTER RESPONSIBILITY: MSFC

APPROVAL

ACCOMPLISHMENT

MILESTONE SCHEDULE

RTOP TITLE IECM/DFI SYSTEM

level

RTOP NO. ☐ ADV. RESEARCH ☐ TECHNOLOGY

ORIGINAL SCHED. APPROVAL (Date)

LAST SCHED. CHANGE (No.) (Initials)

STATUS AS OF (Date) (Initials)

	ACTIVITIES	CY 1977	CY 1978	CY 1979	CY1980	CY1981
1	IECM SYSTEM					
2	PDR					
3	CDR					
4	TEST STRUCT PROTOTYPE					
5	DELIVER FLIGHT UNIT					
6	GSE					
7	GFE INSTRUMENTS					
8						
9						
10						
11						
12						
13						
14						
15						
16						
17						
18						
19						
20						

J F M A M J J A S O N D | J F M A M J J A S O N D | J F M A M J J A S O N D | J F M A M J J A S O N D | J F M A M J J A S O N D

NOTES

☐ SPACE SHUTTLE
☐ SPACE STATION/BASE
☐ _____ PROJECT
☐ NON-PROJECT ORIENTED

Figure XVI-1. Milestone schedule for the IECM combined with a flight launch schedule.

ORIGINAL PAGE IS OF POOR QUALITY

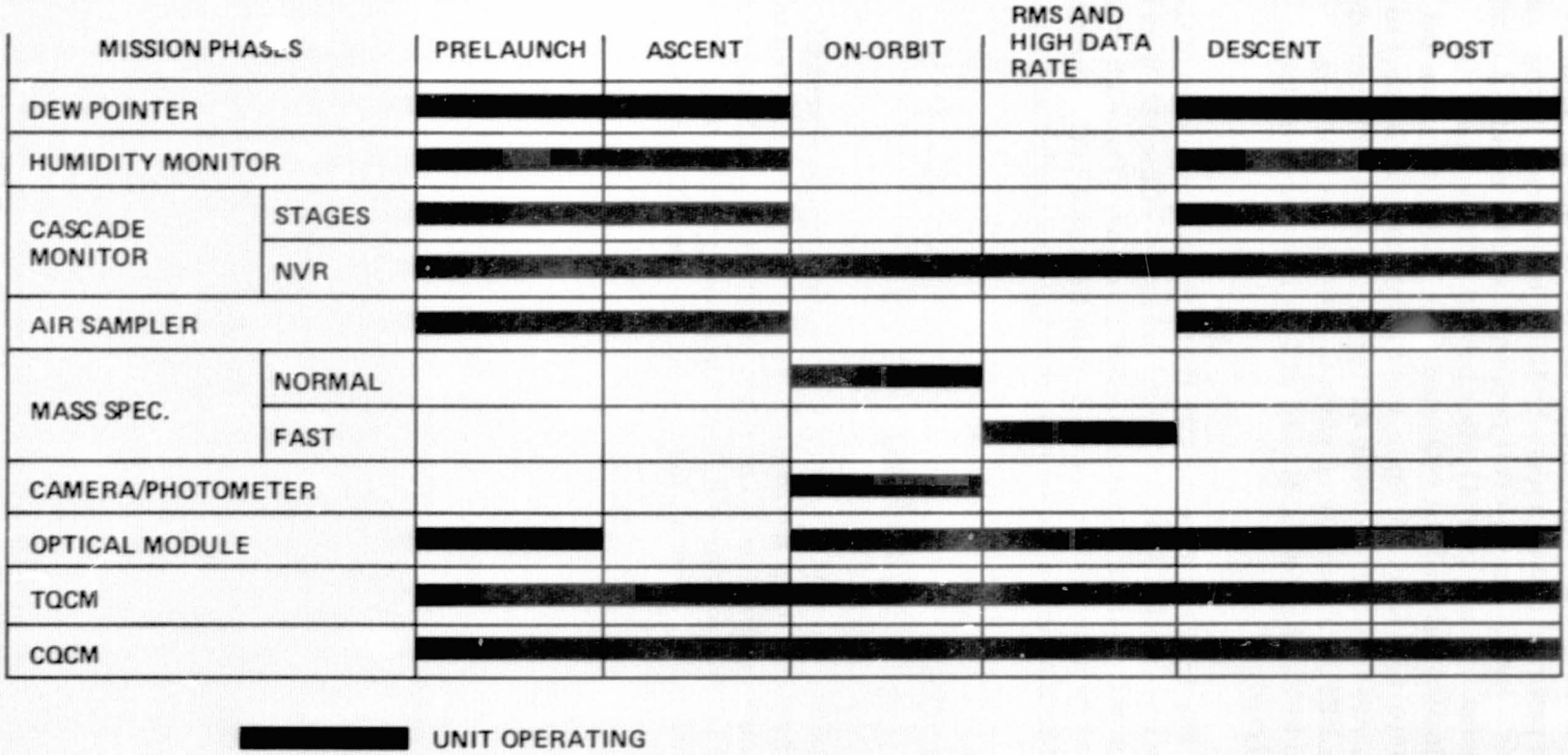

Figure XVI-2. OFT/IECM instrument operation chart.

A launch command from the Orbiter will initiate the IECM, and the Optical Effects Module will be powered during ascent by IECM batteries. Active data will not be taken during ascent. An on-orbit command will be received from the Orbiter multiplexer-demultiplexer (MDM) after orbital altitude has been achieved, and contamination data will be collected from all instruments and stored on a magnetic tape recorder. A deployment command will be sent to the IECM from the LDEF, and data will be taken during deployment and approximately 20 h after the LDEF is a free-flying payload. After the LDEF is retrieved and returned to Earth, the IECM data will be reduced from the magnetic tape and analyzed.

3. Spacelab. The IECM is scheduled to fly on Spacelab as part of the Verification Flight Instrumentation (VFI). Flight operation of the IECM on the Spacelab is the same as the on-orbit phase of the OFT series. The high data rate command is also crew activated on Spacelab with the same IECM operation as defined for OFT. The instruments operating during these modes are shown in Figure XVI-2.

C. Data Reduction

After each mission, the tape recorder will be returned to Marshall Space Flight Center where the flight data will be removed and transferred to nine-track tape for computer analysis. The flight data will be combined with Orbiter data furnished by Johnson Space Center for a comprehensive analysis. For a listing of resulting plots, graphs, and tables, see the IECM ground operations plan.

XVII. SUMMARY

Edgar R. Miller

The Induced Environment Contamination Monitor (IECM), with its complex of 11 instruments, will provide a comprehensive set of contamination and environment data which will provide a basis for judging the adequacy of the Space Shuttle Transportation System (STS) to meet the requirements of the large variety of its payloads. In addition, the data will help define the nature and location of contamination sources, whether the source is known or unexpected.

These data will be obtained during all phases of Shuttle operations during the Orbiter Flight Tests (OFT's) and Spacelabs 1 and 2. Additional data on satellite deployment by the Shuttle will be obtained by the Long Duration Exposure Facility (LDEF)/IECM and the mapping of Shuttle with the Remote Manipulator System (RMS) and the Demonstration Flight Instrumentation (DFI)/IECM unit planned for OFT's 3 and 4 will provide direct data on emitted contaminants as well as Vernier Rocket Control System (VRCS) engine plume and flash evaporator pressure and flow characteristics.

APPENDIX

EFFECTS OF ENVIRONMENTAL EXTREMES ON FILMS

The factors which can cause degradation of photographic film are time, temperature, and humidity. Storage of film in a refrigeration unit before launch and after touchdown will minimize the effects on speed, contrast, and gross fog. Higher than normal temperatures and humidities will significantly increase the level of gross fog and decrease both speed and contrast. Low humidities can result in cracks and tears in the emulsion and static electric markings, while high humidities cause "moisture static" markings, sticking together of layers of rolled film, and separation of the emulsion from the backing during unwinding from rolls.

Since the limits recommended by film manufacturers are unsuitable for spacecraft applications, a test program was performed by Martin Marietta, Denver Division, to determine the optimum environmental parameters for the Skylab films. The tests included type 2485 film and Tri-X film, which are candidates for use on the Induced Environment Contamination Monitor (IECM).

The general effect of temperature variation is an increase in the gross fog and an upward shift of the response curve on the density scale with increasing temperature. These effects were more dynamic on the lower exposure end of the curve and cause a decrease in both gamma and density range. There also appears to be a very slight decrease in speed.

Degradation resulting from relative humidity is more severe than that from temperature. Fading of the latent image resulted from increased humidity and occurred primarily for high exposure values. This, again, caused a decrease in the density range and the gamma. There is also a significant decrease in the speed.

When the combined effects of temperature and humidity are considered, the situation becomes worse. High temperatures have a tendency to accelerate the effects of humidity.

The physical properties of the film also suffer from increased temperature and humidity. During the tests, difficulty was experienced in removing from the holders the film strips processed at 90 percent relative humidity.

PRECEDING PAGE BLANK NOT FILMED

Close examination revealed that the gelatin coating on the film had been softened by the high humidity and then stuck to the holder. Increased temperature also increased the speed and severity of the sticking.

Based upon the testing of latent image degradation by environmental extremes, it was determined that 90 percent relative humidity is absolutely unacceptable at any temperature. A temperature of 49°C (120°F) or greater was also unacceptable. Temperatures up to 38°C (100°F) are considered marginally acceptable for limited periods of time if low humidity is maintained. For long periods of time, 50 percent and 20 percent relative humidity at 27°C (80°F) were found to be acceptable environments. Allowing the humidity to fall below 20 percent may cause reticulation and static electric distortion of the data. It should be remembered that this information pertains only to latent image degradation. Indications are that the degradation to the sensitivity of unexposed film caused by these factors may be more extreme than that to the latent image.

On the basis of the previously stated facts, it is believed that optimum results will be realized with the IECM Camera/Photometer using a humidity slightly above 20 percent and a temperature no higher than 38°C (100°F). An increase in these parameters will reduce the threshold of detectability of this instrument. A significant increase in these parameters will reduce the probability of successful completion of the mission of this instrument.