General Disclaimer

One or more of the Following Statements may affect this Document

- This document has been reproduced from the best copy furnished by the organizational source. It is being released in the interest of making available as much information as possible.

- This document may contain data, which exceeds the sheet parameters. It was furnished in this condition by the organizational source and is the best copy available.

- This document may contain tone-on-tone or color graphs, charts and/or pictures, which have been reproduced in black and white.

- This document is paginated as submitted by the original source.

- Portions of this document are not fully legible due to the historical nature of some of the material. However, it is the best reproduction available from the original submission.

Produced by the NASA Center for Aerospace Information (CASI)

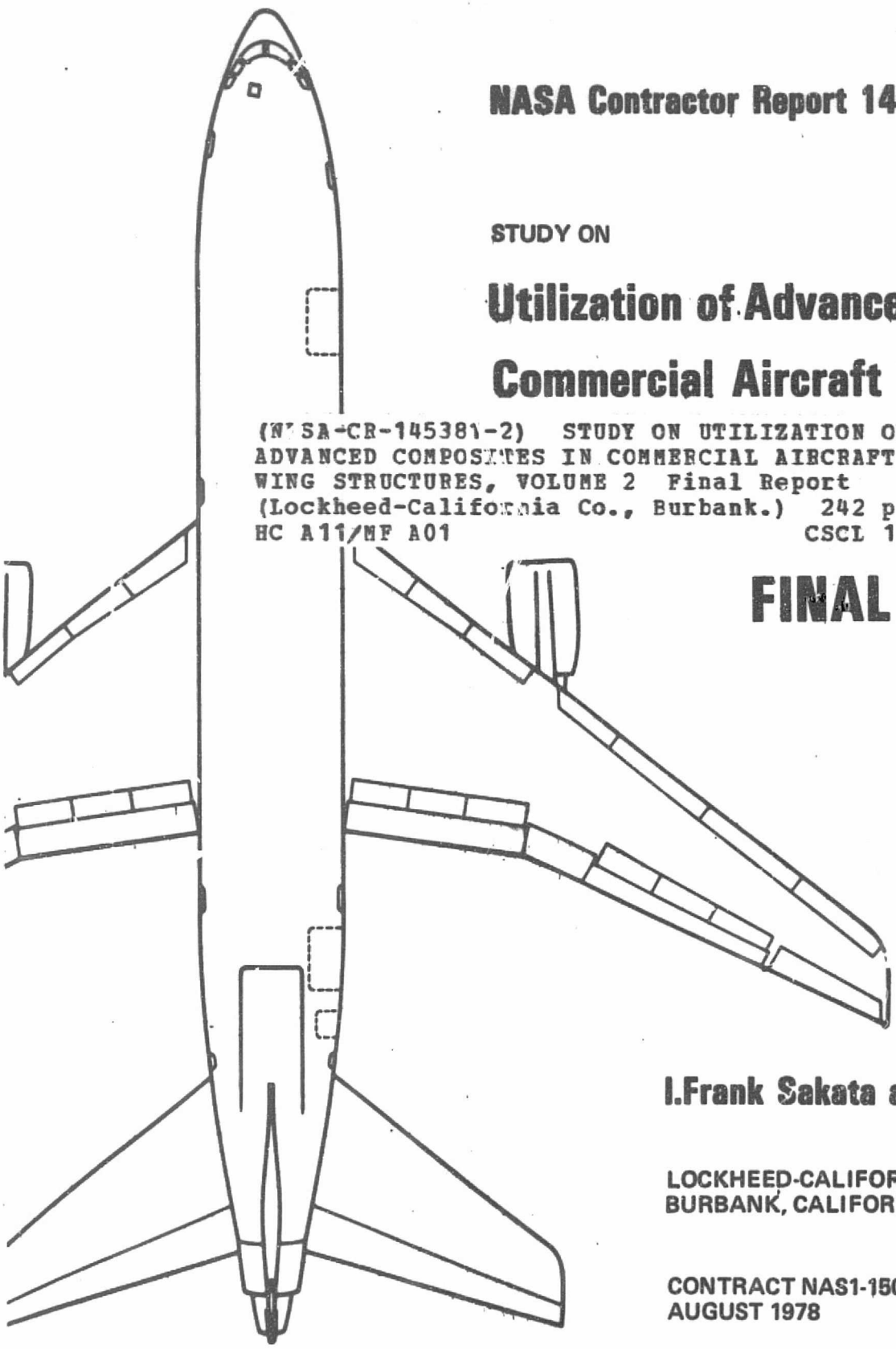

NASA Contractor Report 145381-2

STUDY ON

Utilization of Advanced Composites in Commercial Aircraft Wing Structures

(NASA-CR-145381-2) STUDY ON UTILIZATION OF ADVANCED COMPOSITES IN COMMERCIAL AIRCRAFT WING STRUCTURES, VOLUME 2 Final Report (Lockheed-California Co., Burbank.) 242 p HC A11/MF A01 CSCL 11D G3/24

N78-32188

Unclas 31585

FINAL REPORT

I.Frank Sakata and Robert B. Ostrom

LOCKHEED-CALIFORNIA COMPANY
BURBANK, CALIFORNIA

CONTRACT NAS1-15005
AUGUST 1978

REPRODUCED BY
NATIONAL TECHNICAL
INFORMATION SERVICE
U. S. DEPARTMENT OF COMMERCE
SPRINGFIELD, VA. 22161

NASA National Aeronautics and Space Administration
Langley Research Center • Hampton, Virginia

NOTICE

THIS DOCUMENT HAS BEEN REPRODUCED FROM THE BEST COPY FURNISHED US BY THE SPONSORING AGENCY. ALTHOUGH IT IS RECOGNIZED THAT CERTAIN PORTIONS ARE ILLEGIBLE, IT IS BEING RELEASED IN THE INTEREST OF MAKING AVAILABLE AS MUCH INFORMATION AS POSSIBLE.

1. Report No.	2. Government Accession No.	3. Recipient's Catalog No.
145381-2		

4. Title and Subtitle	5. Report Date
UTILIZATION OF ADVANCED COMPOSITES IN COMMERCIAL AIRCRAFT WING STRUCTURES - FINAL REPORT	August 1978
	6. Performing Organization Code D/75-72
7. Author(s) I. Frank Sakata and Robert B. Ostrom	8. Performing Organization Report No. LR 28610
	10. Work Unit No.
9. Performing Organization Name and Address LOCKHEED-CALIFORNIA COMPANY Division of Lockheed Corporation Burbank, CA 91520	11. Contract or Grant No. NAS1-15005
	13. Type of Report and Period Covered Contract Report
12. Sponsoring Agency Name and Address National Aeronautics and Space Administration Langley Research Center Hampton, Virginia 23665	14. Sponsoring Agency Code

15. Supplementary Notes
Final Report
Langley Technical Representative: Louis [illegible]. Vosteen
Langley Alternate Technical Representative: Herman L. Bohon

16. Abstract

A study was performed to plan the effort required by commercial transport manufacturers to accomplish the transition from current construction materials and practices to extensive use of composites in wings of aircraft that enter service in the 1990 time-period. The engineering and manufacturing disciplines which normally participate in the design, development and production of a new aircraft were employed to ensure that all of the factors that would enter a Company decision to commit to production of a composite wing structure were addressed. A conceptual design of an advanced technology reduced energy aircraft provided the framework for identifying and investigating unique design aspects. A plan development effort defined the essential technology needs and formulated approaches for effecting the required wing development. Presented are two separate programs: (1) a joint government-industry material development program, and (2) a task-oriented wing structure development program. This report presents the wing development program plans, resource needs and the supporting data for the development plans.

17. Key Words (Suggested by Author(s))	18. Distribution Statement
Composite Wing Development, Composite Materials Development, Composite Technology Development, Composite Wing Structure, Commercial Aircraft Wing	Unclassified - Unlimited

19. Security Classif. (of this report)	20. Security Classif. (of this page)	21. No. of Pages*	22. Price*
Unclassified	Unclassified		

* For sale by the National Technical Information Service Springfield Virginia 22161

FOREWORD

This is the final report of the program completed by the Lockheed-California Company, "Study on Utilization of Advanced Composites in Commercial Aircraft Wing Structure," which was conducted from August 1977 through April 1978.

The study was performed under the direction of the Structures and Materials Division of the Lockheed-California Company for the NASA-Langley Research Center, ACEE Program Office, Hampton, Virginia. The study manager for Lockheed was I. Frank Sakata. He was assisted by Robert B. Ostrom, Plan Development, and George W. Davis, Conceptual Design.

Other major contributers were:

S. V. Sorenson	Materials and Processes
A. C. Jackson	Composite Structures
S. I. Bocarsly	Structures and Materials Laboratory
S. J. Smyth	Advanced Design
R. A. Short	Manufacturing
B. Mosesian	Quality Assurance
D. J. Spangler	Product Support

CONTENTS

	Page
FOREWORD	iii
ILLUSTRATIONS	ix
TABLES	xiii
SUMMARY	1
INTRODUCTION	4
COMPOSITE WING DEVELOPMENT	7
Aircraft Development Timing	7
Development Plan Philosophy	8
Production Program Relationship	10
ACEE and Composite Research and Technology Programs	10
Development Plan Ingredients	10
Development Plan Premises	12
Structural Design Concept	12
Manufacturing Approach	14
Required Technology Department	17
Material Development	17
Design Technology Development	19
Manufacturing Technology Development	20
Maintainability Technology Development	21
Development Programs Summary	22
PART 1 - MATERIAL DEVELOPMENT PROGRAM	23
Introduction	23
Program Summary, Schedule and Resrouces	27
Establishment of Industry Standards	27
NASA-Industry-FAA Task Force	27
Other Development Tasks	31
Material Development and Screening	31
Supplier Development	31
Effect of Reinforcement Form on Processing Cost	33
Effect of Resin Type and Fiber Finish on Processing Cost	34
Effect of Reinforcement Form and Resin Type on Laminate Properties and Quality	35

Preceding page blank

CONTENTS (Continued)

	Page
Effect of Resin and Fiber Finish Type on Laminate Properties	35
Screening Tests	36
Evaluation and Selection	36
Material Characterization and Substantiation	36
Material and Process Variables Effects	36
Design Allowable Testing	44
PART 2 - WING STRUCTURE DEVELOPMENT PROGRAM	46
Program Summary and Schedule	46
Design Data Testing	46
Design Concepts Evaluation	46
Preliminary Design	46
Demonstration Article Development	46
Program Resources	47
DESIGN DATA TESTING	51
Fabric Characterization	51
Design Strain Level Assessment	54
Design Strain	54
Impact Effects	54
Cyclic Environment Effects	55
Stacking Sequency Effects	55
Fuel and Hydraulic Fluid Effects	55
Soak Effects on Static Strength	55
Soak/Cyclic Environment Effects on Fatigue Strength	56
Pin Bearing Tests	56
Thick Laminate Moisture Absorption/Desorption Evaluation	56
Accelerated Conditioning Tests	57
PRVT Chamber Tests	57
DESIGN CONCEPTS EVALUATION	57
Concepts Design and Analysis	65
Design Criteria	65
Design Conditions and Loads	65
Material Evaluation and Selection	65

CONTENTS (Continued)

	Page
Preliminary Design Data	66
Design Concepts Definition and Evaluation	66
Wing Structure Definition	66
Aeroelastic Analysis	66
Test Specimen Definition	67
Producibility and Fabrication Methods	67
Manufacturing/QA Methods and Data	67
Manufacturing Concepts	68
Manufacturing Cost Analysis	68
Manufacturing Facilities Plan	69
Process Development and Fabrication	70
Process Development	70
Thick Laminate Behavior	71
Cure Cycle Development	71
Adaptability to Automated Layup	71
Shrink, Warp, Thickness Variation	72
Tooling Materials and Designs	72
Integral Heat/Pressure Tooling	72
Match Molds and Press Forming	73
Bag and Bleeder Materials	73
Machining Drilling	73
Quality Assurance Process Development	74
Non-Destructive Inspection (NDI) Development	74
Specimen Tooling and Fabrication	74
Concept Development Testing	75
Covers	75
Spars	75
Ribs	78
Assemblies	78
PRELIMINARY DESIGN	78
Wing Design and Analysis	78
Wing Design Criteria and Requirements	91
Preliminary Wing Design	91

CONTENTS (Continued)

	Page
Design Methodology and Analysis	92
Test Component Definition	92
Fabrication Methods Verification	93
Fabrication/Quality Assurance Plan	93
Cost Projections	93
Manufacturing Facilities Plan	94
Sub-Component Tooling and Fabrication	94
Design Verification Testing	94
Covers	98
Spars	98
Ribs	98
Lightning Strike Protection System	98
DEMONSTRATION ARTICLE DEVELOPMENT	99
Manufacturing Process Demonstration and Validation Article	99
Wing Box Test Specimen	101
Design and Analysis	101
Fabrication and Assembly	101
Testing	103
CONCLUDING REMARKS	104
APPENDIX A - CONCEPTUAL DESIGN	106
APPENDIX B - TECHNOLOGY NEEDS	172
APPENDIX C - FACILITY AND EQUIPMENT REQUIREMENTS	189
APPENDIX D - WING DESIGN CRITERIA AND STRUCTURAL REQUIREMENTS CONSIDERATION	196
APPENDIX E - DEMONSTRATION ARTICLE DEVELOPMENT OPTION	219
REFERENCES	229

ILLUSTRATIONS

Figure		Page
1	Study Elements for Wing Development Plan	5
2	New Long-Range Aircraft Timing	9
3	Commercial Air Transport Development	9
4	Production Program Relationship	11
5	ACEE and Composite Research and Technology Programs Schedule	11
6	General Arrangement - Baseline Airplane	13
7	Wing Characteristics of Baseline Airplane	13
8	Multi-Rib Structural Arrangement of Baseline Wing	15
9	Representative Cross-Sectional Data for Blade-Stiffened Panel	15
10	Lower Surface Laminate Layup of Baseline Wing	16
11	Manufacturing Breakdown of Baseline Wing	18
12	Composite Wing Development Program Scheudle	22
13	Material Development Program Schedule	28
14	Material Development Program Cost Schedule	30
15	Unidirectional Noncrimped Weave Fabric	30
16	Wing Structure Development Program Schedule	47
17	Wing Structure Development Program Cost Summary	48
18	Wing Structure Development Program/Function Labor Schedule	49
19	Design Data Testing Schedule	53
20	Design Concepts Evaluation Schedule	58
21	Preliminary Design Schedule	79
22	Demonstration Article Development Schedule	100
23	Process Demonstration/Validation Panel	102
24	Representative Wing Box Test Specimen	102
25	General Arrangement - RE-1011 Advanced Technology Airplane	107
26	Design Wing Shears	111
27	Design Wing Bending Moments	112

ILLUSTRATIONS (Continued)

Figure		Page
28	Design Wing Torsional Moments About Rear Beam	112
29	Structural Box Geometry	114
30	Wing Upper Surface Load Intensities	115
31	Wing Lower Surface Load Intensities	116
32	Preliminary Upper Surface Panel Design Data at IWS 122	123
33	Variation in Panel Thickness with Stringer Spacing, Blade-Stiffened Concept	124
34	Cross-Sectional Data for Blade-Stiffened Panel Configuration	126
35	Wing Bending and Torsional Stiffness, Blade-Stiffened Surface Panels	128
36	Variation in Panel Thickness with Stringer Spacing, Hat-Stiffened Concept	129
37	Cross-Sectional Data for Hat-Stiffened Panel Configurations	130
38	Wing Bending and Torsional Stiffness, Hat-Stiffened Surface Panels	133
39	Wing Configuration Data	134
40	Basic Wing Data	135
41	Generalized Wing Structural Arrangements	137
42	Wing Multi-Spar Structural Arrangement	137
43	Wing Multi-Rib Structural Arrangement	139
44	Typical Manufacturing Breakdown - Multi-Rib Design	140
45	Master Model	140
46	Skin Layup Tool Construction	142
47	Skin Layup Tool	142
48	Integral Heat/Pressure Skin Molding Tool	143
49	Broadgoods Dispensing Machine	143
50	Stiffener Roll Forming Machine	145
51	Stiffener Prepreg and Forming Machine	145
52	Stiffener Roll and Pulforming Machine	147
53	Wing Spar Manufacturing Approach	147

ILLUSTRATIONS (Continued)

Figure		Page
54	Elastomeric Tool for Molding One-Piece Spars	148
55	Heated Press Tool for Molding One-Piece Spars	148
56	Rib Cap Tooling	150
57	General Family of Crossplied Laminates for the Upper Wing Surface	152
58	General Family of Crossplied Laminates for the Lower Wing Surface	153
59	Candidate Stringer Orientations	154
60	Typical Clamp-Type Wing Lower Surface Access Door	158
61	Single-Piece Spar with Integrally Stiffened Web	158
62	One-Piece Molded Spar	159
63	Spar Caps Integral with Surfaces, Separate Integrally Stiffened Webs	159
64	Skin/Stringer Rib Concept	161
65	Circular-Arc Rib Concept	161
66	Typical Open Rib Concept	162
67	Alternate Open Rib Concept	162
68	Truss Rib Concept	162
69	Candidate Manufacturing Joints	163
70	Composite Wing Production Joint Concept - BL118, Upper, for Hat-Stiffened Covers	166
71	Composite Wing Production Joint Concept - BL118, Upper, Alternate for Hat-Stiffened Covers	166
72	Composite Wing Production Joint Concept - BL118, Upper, for Blade-Stiffened Covers	168
73	Composite Wing Production Joint Concept - BL118, Lower, for Blade-Stiffened Covers	168
74	Tension-Type Composite Wing Production Joint Concept - BL118, Upper, for Blade Stiffened Covers	169
75	Wing Box/Main Landing Gear Interface	169
76	Fuel Tank Sealing Concepts	171
77	Ground Transient Solar Heating for OWS 452	202
78	Time-Temperature History of OWS 452 Without Fuel	202
79	Hail Terminal Velocity	204

ILLUSTRATIONS (Continued)

Figure		Page
80	Example of Hail Criteria for On-the-Ground and Flight Conditions	204
81	Relationship of Demonstration Article Option and Total Wing Planform	220
82	Demonstration Article Development Option Schedule	221
83	Demonstration Article Option for Technology Readiness Verification	223
84	Composite Wing Demonstration Article Option Assembly Area	228

TABLES

Table		Page
1	Comparison of Characteristics of State-Of-Art and New Target Material	32
2	Summary of Material Screening Tests	37
3	Summary of Material Substantiation Tests	39
4	Summary of Material and Process Variable Tests	43
5	Summary of Design Allowable Tests	45
6	Wing Structure Development Program Cost Matrix (Equivalent Man-Years)	48
7	Wing Structure Development Program Task/Labor Schedule (Man-Years)	49
8	Wing Structure Development Program Engineering Labor Schedule (Man-Years)	50
9	Wing Structure Development Program Manufacturing Labor Schedule (Man-Years)	50
10	Wing Structure Development Program Testing Labor Schedule (Man-Years)	50
11	Summary of Design Data Tests	52
12	Summary of Concept Development Tests	76
13	Summary of Design Verification Tests	95
14	Airplane Characteristics	109
15	RE-1011 Airplane Group Weight Statement	109
16	RE-1011 Wing Weight Statement	111
17	Wing Surface Load Environment and Stiffness Requirements	117
18	Study Criteria for Conceptual Design	119
19	Preliminary Input Material Properties for HYBRID Computer Program	120
20	Preliminary Design Data for Upper Surface Panels at IWS 122	122
21	Summary of Design Data for Upper Surface Panels - Blade-Stiffened Configuration	127
22	Summary of Design Data for Upper Surface Panels - Hat-Stiffened Configuration	132
23	Considerations for Stiffener Orientation	155
24	Assessment of Manufacturing Joint Location	165

TABLES (Continued

Table		Page
25	Summary of Development Needs and Anticipated Advances	174
26	Essential Technology Development	183
27	Graphite Tapelaying Equipment of Aerospace Manufacturers - 1977	195
28	Damage Tolerance Requirements	207
29	Proposed Format for Presenting a Summary of Hazards to the Wing Box	208
30	Wing Box Demonstration Article Option Assembly Area Requirements	227
31	Development Program Option Cost Matrix	227

STUDY ON UTILIZATION OF ADVANCED COMPOSITES IN COMMERCIAL AIRCRAFT WING STRUCTURES

by

I. F. Sakata and R. B. Ostrom
LOCKHEED-CALIFORNIA COMPANY

SUMMARY

A study was performed to plan the effort required by commercial transport manufacturers to accomplish the transition from current construction materials and practices to extensive use of composites in wings of aircraft that would enter service in the 1990 time period. The study defined the technology and data needed to support the introduction of composite materials into the wing primary structure of future production aircraft, and developed, in detail, the ingredients of a wing structure development program. In addition, the study delineated the need and requirements, and a plan for development of a new, improved composite material system.

The planned wing structure development program will provide the technology and data needed: (1) to produce a cost-competitive advanced composite wing structure which achieves the fuel-savings goal of NASA's ACEE composite program, (2) to provide Company management confidence to commit to production of such a structure in the 1985-1990 time period, and (3) to achieve certification of an aircraft embodying such a structure.

The material development and evaluation program will result in a new material system with improved characteristics that will lead to an optimum wing structure program.

A multi-disciplinary approach was used in the study, including all of the engineering and manufacturing disciplines which normally participate in the design, development and production of a new aircraft product, to ensure that all of the factors that enter a Company decision to commit to production of a composite wing structure were addressed.

The study effort was comprised of two parallel and highly interactive elements: a conceptual design study, and the plan development. The conceptual design study provided the framework for identifying and investigating unique design aspects and problem areas in the use of composites in commercial transport wing structure, and catalyzed the identification of technology and data needs and the subsequent planning for their development and validation. The conceptual design study also provided the basis for definition of needed development testing, and facility and equipment requirements for supporting the development program and for subsequent production of composite wing structure. The plan development effort defined the technology needs, formulated approaches for effecting the required development, and evaluated and assessed the resultant wing structure and material development plans.

Essential technology development which must be incorporated in the wing structure development program or addressed in appropriate technology development programs were defined for the technology areas of design, manufacturing, maintainability and materials. Based on assessment of the technology needs and development approaches, and the insight provided by the conceptual design study, a comprehensive wing structure development plan was defined.

The definition of the material development program is based on the belief that while current composite material systems could be used as the basis for composite wing development, these systems will be 20 years old by 1986 and improvements to these systems are both feasible and desirable. The proposed development program is a joint Government-industry effort, involving all three of the major commercial transport manufacturers, to define the requirements for an improved material system, to plan and coordinate its development and evaluation, and to characterize its behavior. The program consists of five tasks: establishment of industry standards and target specifications for the new material; material development by suppliers, and screening/evaluation by the users; material characterization and substantiation; investigation of material and process variables effects; and design allowable testing. The program timing provides for phased incorporation of the new material system into the wing structure development program, and for development of design allowable data in time for a composite wing production commitment in the 1985-1986 time period.

The wing structure development program embodies the following ingredients: engineering and manufacturing studies; manufacturing development; and development testing to generate design analysis data, to support concept development, and for design verification. In addressing these essential ingredients, the development plan is structured into four tasks: design data testing, design concepts evaluation, preliminary design, and demonstration article development. The Design Data Testing task will provide needed supplementary data to the existing T300/5208 graphite epoxy data base, verifying or determining strength and durability characteristics of the material under the wing design environment. Under the Design Concepts Evaluation task, promising structural approaches for composite wing structure will be identified through analytical design studies and development fabrication and testing. The composite wing structure design will be expanded and refined, employing the most promising structural concepts, under the Preliminary Design task. Design and manufacturing parameters will be verified; cost-weight trade studies performed; and verification tests conducted on a variety of wing sub-components. The improved material system developed under the proposed material development program will be incorporated into the wing design. Finally, under the Demonstration Article Development task, fabrication of a large wing cover segment, and design, manufacture and testing of a representative wing box structure will be undertaken to demonstrate the readiness of composite wing structure technology.

In recognition of the current uncertainties concerning the funding and timing of NASA's planned composite wing development effort, recommendations are made that (1) the development of an improved material system be started immediately so as to provide a firm material base for the application of composite primary wing structure, and (2) that efforts also be initiated to develop the design data necessary to demonstrate the durability and damage tolerance characteristics of composite wing structure.

INTRODUCTION

The National Aeronautics and Space Administration (NASA) Langley Research Center is pursuing a research program, the Aircraft Energy Efficiency (ACEE) Program, to establish, by 1985, the technological basis for the design of subsonic commercial transport aircraft requiring a minimum of 40 percent less fuel than current designs. Obtainment of these fuel-savings is being addressed through structural weight reduction, improved engine efficiency, and improved aerodynamics. The composite structures element of the ACEE program is focused on structural weight reduction, and the provision to the commercial aircraft manufacturers, the FAA and the airlines of the experience and confidence in advanced composite structures in future commercial aircraft.

The program includes development of the technology for composite wing structure. This effort will exercise and demonstrate composite wing technology to the extent that aircraft manufacturers can incorporate composite wing structures into new aircraft in the 1985-1990 time frame.

As a part of the ACEE program to advance the technology for wing structures, NASA has awarded contracts to three commercial transport manufacturers (Lockheed, Boeing and McDonnell Douglas) to study and plan the effort required by commercial transport manufacturers to accomplish the transition from current construction materials and practices to extensive use of composites in wings of aircraft that will enter service in the 1990 time period. Specific objectives were the definition of the technology and data needed to support the introduction of advanced composite materials into the wing structure of future production aircraft, and development in detail, of the ingredients for a development program which will provide the needed technology and data.

The study outlined an appropriate wing structure development plan and defined the technology and data needed:

(1) to produce a cost-competitive advanced composite wing structure which achieves the fuel-saving goal of the ACEE composites program,

(2) to provide Company management confidence to commit to production of such a structure in the 1985-1990 time period,

(3) to achieve certification of an aircraft embodying such a structure.

In addition, the study delineated the need and requirements for development of a new, improved material system.

A multi-disciplinary approach was used in the study, including all of the engineering and manufacturing disciplines which normally participate in the design, development and production of a new aircraft product. This approach ensured that all of the factors that enter into a Company decision to commit to production of a composite wing structure were addressed. The study was comprised of two parallel and highly interactive elements: a conceptual design study, and the plan development (Figure 1).

The conceptual design study provided the framework for identifying and investigating unique design aspects and problem areas in the use of composites in commercial aircraft structure. These, in turn, catalyzed the identification of technology needs and subsequent planning for their development and validation. The conceptual design also provided the basis for definition of needed design development and verification testing, and facility and equipment requirements for supporting the technology development program, and for subsequent production of composite wing structures.

The plan development effort identified technology needs, formulated plans for effecting the essential technology development, and formulated a wing development plan.

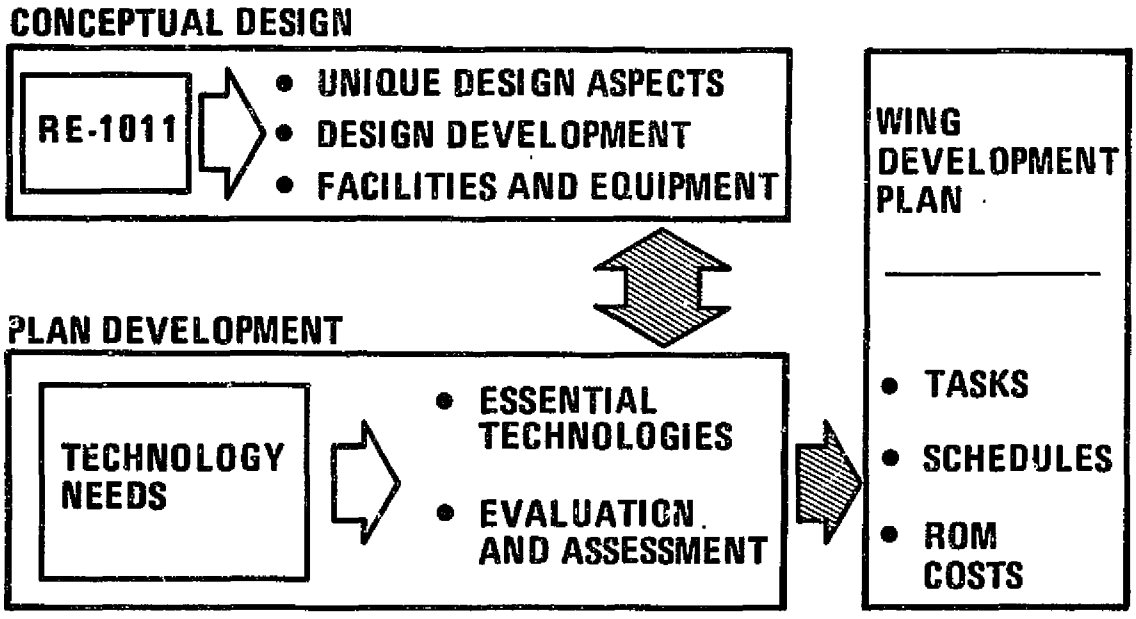

Figure 1. Study Elements for Wing Development Plan

The plan which resulted from the study defined two separate development programs:

(1) A material development program: a joint government-industry effort involving the three manufacturers and the material suppliers; and

(2) A wing structure development program, to be performed by each of the three major commercial transport manufacturers.

The material presented in this report summarizes the study performed by the Lockheed-California Company. The resultant wing structure and material development plans are presented in the body of the report. Supporting data for the development plans are presented in the appendices, including summary discussions of the conceptual design study, technology needs, and facility and equipment requirements. An executive summary of the study results is presented in Reference 1.

COMPOSITE WING DEVELOPMENT

The advancement in airframe design from the 10-15 passenger aircraft of the 1920's to the current widebody transports has been an evolutionary process. During the period many material improvements have been implemented in the airframe design which have enhanced their operational efficiency. The incorporation of extensive amounts of graphite composites in the next generation of commercial transport aircraft potentially can lead to further advancement through significant reduction in structural weight and consequently, substantial fuel savings. However, in order for the application of composite materials in primary structures such as the wing box to be economically viable, a firm technology base for design, analysis, manufacture and inspection of composite primary structure must be established. In addition, the technology and data must be available prior to project go-ahead for the new aircraft.

Aircraft Development Timing

The point in time when technology readiness must be established for utilization of composite materials in primary wing structures depends upon:

(1) what degree of technology advancement is required;

(2) what funding support is to be made available to establish this technology;

(3) when can a new aircraft that incorporates this technology be produced; and most importantly,

(4) when will the marketplace be in a position to accept and employ this new advanced technology aircraft?

The timing for new long-range advanced technology aircraft needs is shown by the trends of fleet size of the current widebody aircraft over the next decade on Figure 2. As displayed on the figure, the fleet size of these subsonic widebodies in the 1980-1990 time-period are projected to consist of increasing numbers of derivative aircraft.

The ability of the airlines to purchase new equipment is related to the airline debt-to-equity ratio. The trends of this economic indicator also is displayed on Figure 2 and show the presently improving economics of the airline industry. However, the anticipated short-to-medium range 200-220 passenger equipment purchase by the airlines to replace their current narrow-body equipment (i.e., 727-100, 707, DC-8) will drive the debt-to-equity ratio back up again (indicated by the shaded area on the figure). These trends indicate the early 1990 time-period as the earliest date in which the airlines will have the ability to purchase a new long-range aircraft.

A look at the historical commercial air transport development further indicates the cyclic nature of the airline industry (Figure 3). Starting with the initial passenger aircraft of the 1920's, there has been an introduction of an advanced technology transport approximately every 12 years.

These trends indicate the potential availability of airline resources for new equipment buys for advanced technology aircraft that will enter service in the early 1990's. Targeting technology readiness for the mid-1980's will provide sufficient time to pursue a systematic composite wing technology development program.

Development Plan Philosophy

Advancement of the technology for production of composite wing structures and their extensive application in commercial transport aircraft requires industry-wide development of a technology base which will support the design, manufacture and operation of such aircraft. Much of the required technology and experience is not readily transferred from one company to another. Consequently, each of the three major commercial transport manufacturers, Lockheed, Boeing and McDonnell Douglas, will require similar development efforts. The most appropriate form for NASA's ACEE composite wing technology development program, therefore, is one which assists each of the three manufacturers in developing the technology and data it feels it needs to commit to production of composite wing structures for future commercial transport aircraft.

ORIGINAL PAGE IS
OF POOR QUALITY

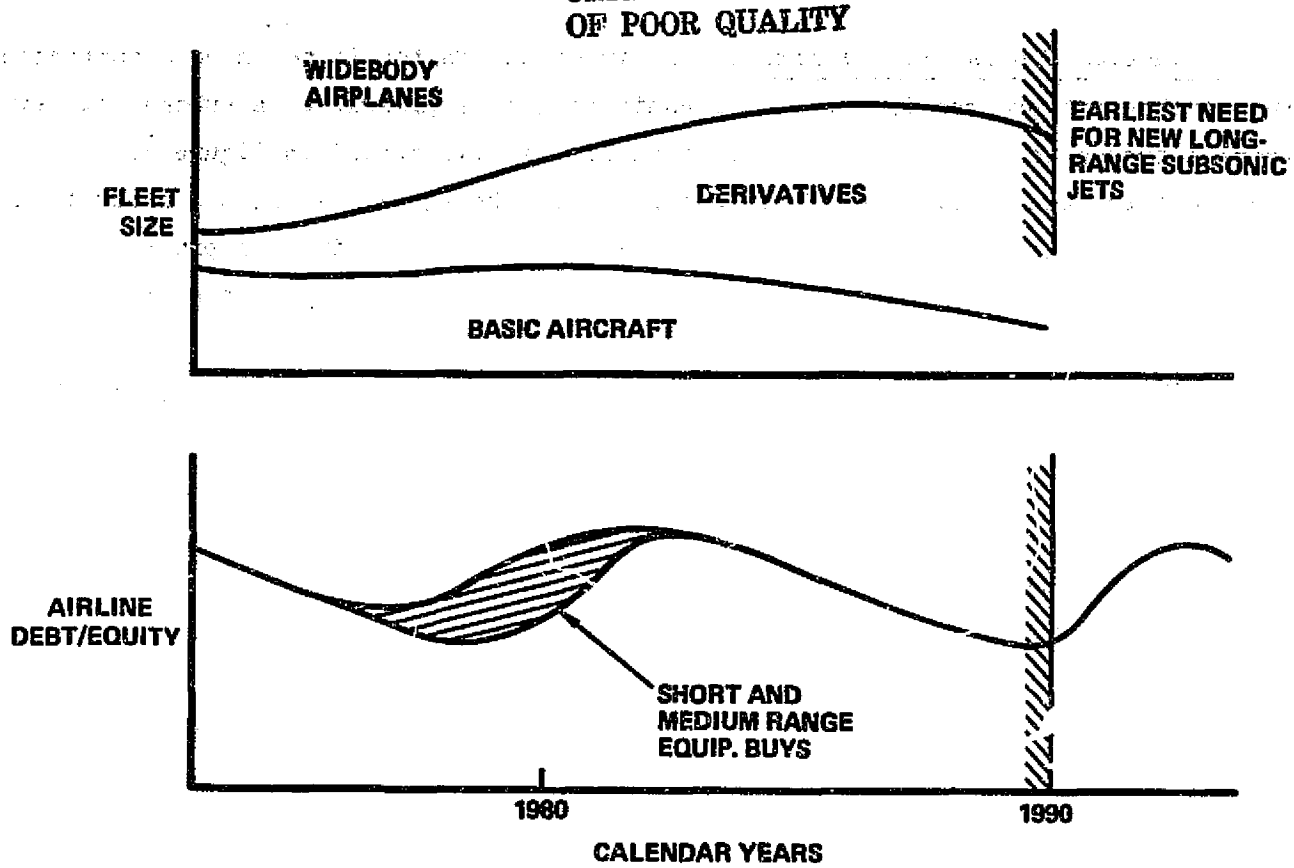

Figure 2. New Long-Range Aircraft Timing

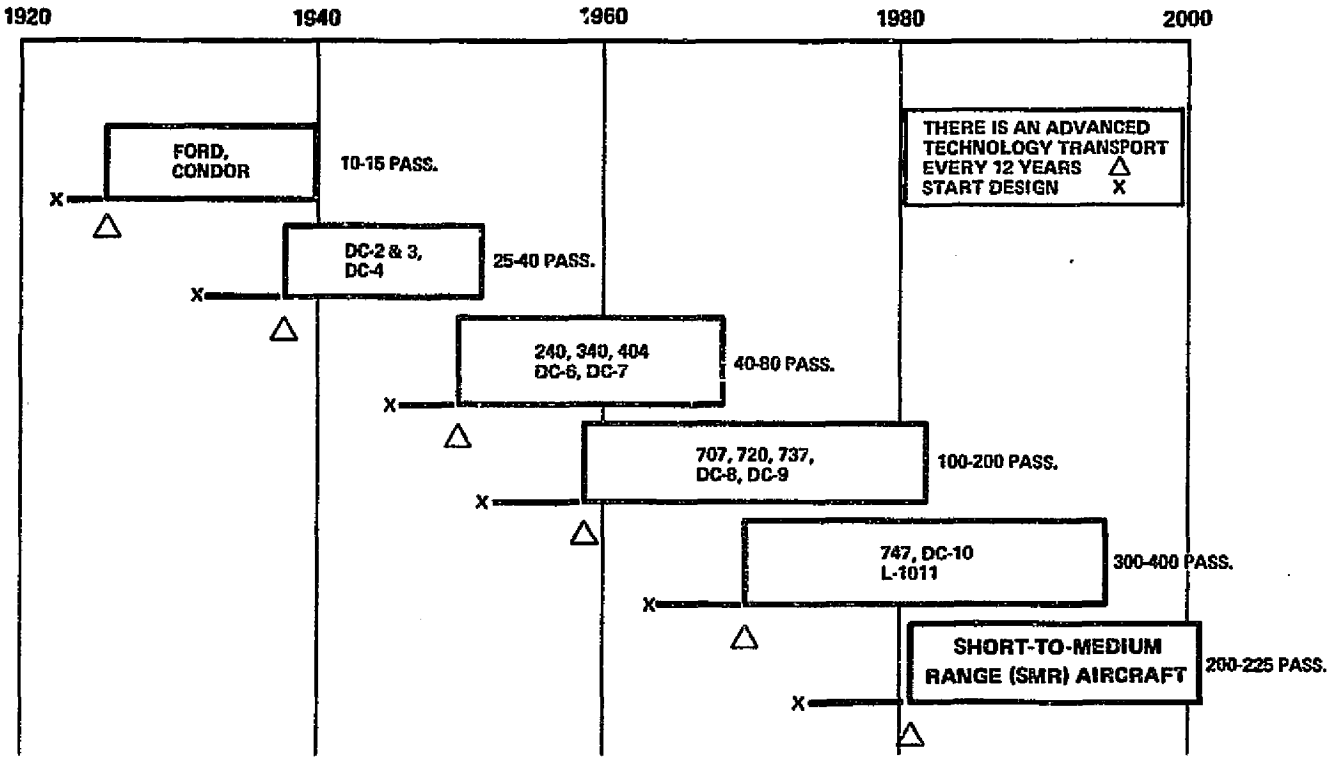

Figure 3. Commercial Air Transport Development

Production Program Relationship. - An important factor in defining a composite wing development program is the relationship of such a program to a subsequent new aircraft production program. This relationship is illustrated in Figure 4. In order to introduce a new aircraft into service in the early 1990's, the production program must be initiated in the mid-to-late 1980's. The production program includes the normal design development, design verification and flight test programs.

ACEE and Composite Research and Technology Programs. - NASA's current ACEE development programs are already helping to ready composites for commercial transport aircraft. These programs are generating composite design and manufacturing technology within the three major commercial transport manufacturers, using existing material systems, to the extent necessary for commitment of secondary and small and medium primary structural components to current subsonic commercial transports. NASA also has implemented a number of composite research and technology programs addressing areas of major concern. The current ACEE and composite technology programs are indicated in Figure 5. The majority of these programs will be completed in the 1981-1985 time period and will contribute significantly to the data and technology required for composite wing development.

Development Plan Ingredients. - A development program that will lead to extensive use of composite materials in large primary wing structures involves the establishment of a technology base through analytical studies, manufacturing development and development testing. Development of the data base must include extensive ground testing of full-scale sub-components. However, flight programs involving the design, fabrication and certification of a composite wing box or partial wing box for a commercial transport (or alternative flight options) are not considered a necessary ingredient of a composite wing technology development program. Of prime concern is the demonstration to Company management of the technical feasibility and the cost-effectiveness of incorporating composite wing structure in future aircraft. Once a sufficient data base exists to convince a company that the benefits of utilizing composite wings can be achieved with acceptable risk, it can proceed with the production, certification and marketing of the new aircraft. The attainment of airlines acceptance and FAA certification will be addressed in the normal fashion using the procedures associated with the introduction of any new aircraft.

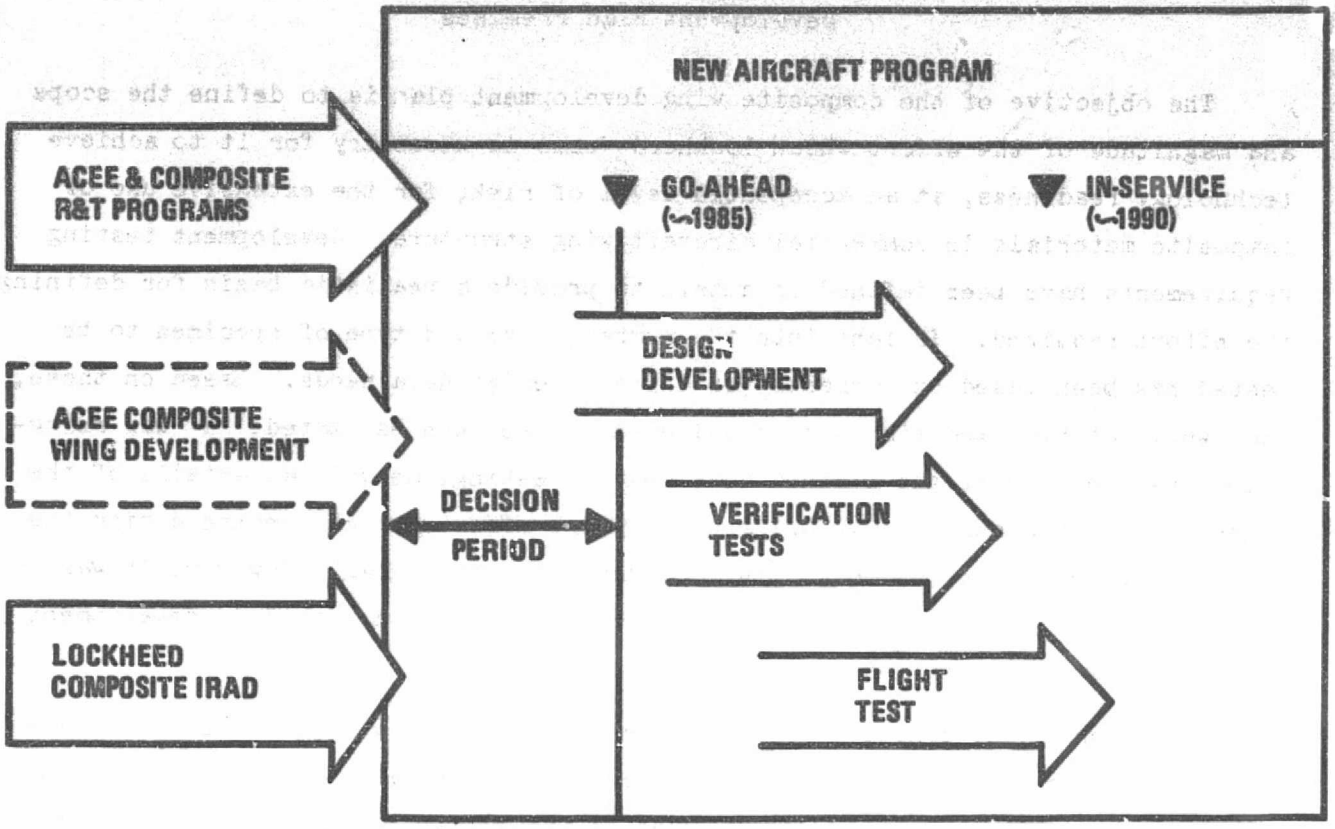

Figure 4. Production Program Relationship

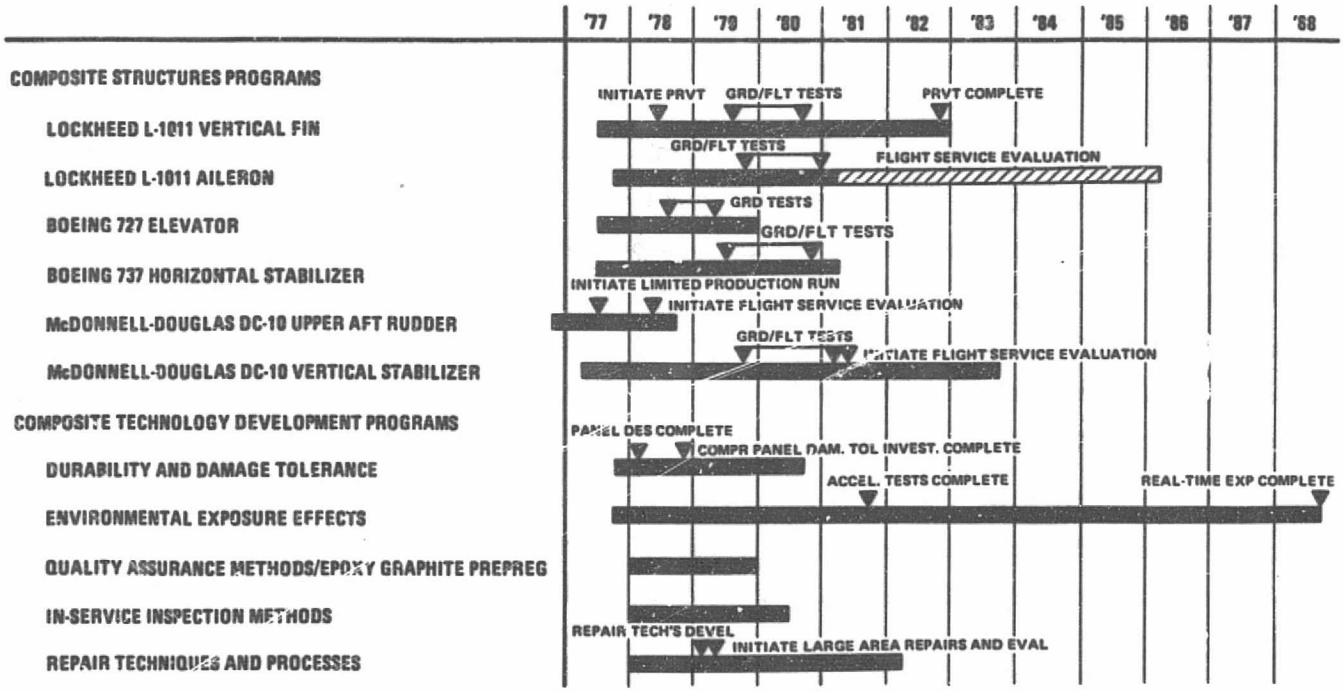

Figure 5. ACEE and Composite Research and Technology Programs Schedule

ORIGINAL PAGE IS
OF POOR QUALITY

Development Plan Premises

The objective of the composite wing development plan is to define the scope and magnitude of the effort which Lockheed feels is necessary for it to achieve technology readiness, at an acceptable level of risk, for the extensive use of composite materials in commercial aircraft wing structure. Development testing requirements have been defined in detail to provide a realistic basis for defining the effort required. Insight into the number, size and type of specimen to be tested has been based on currently envisioned design data needs. Based on these, manpower, material and time span requirements have been estimated. It was recognized that details of the planned development testing, as well as details of the other engineering and manufacturing development efforts, might change during the actual performance of the composite wing development program. However, it was felt that such detailed planning was necessary to ensure that a realistic development program effort was obtained.

For purposes of providing a basis for the planned development effort, baseline premises were established relative to the structural design concept and the manufacturing approach. These were based on the result of the study's conceptual design effort, and included consideration of facility and equipment requirements. The baseline structural concepts and manufacturing approaches are described in the following sections.

Structural Design Concept. - A structural design concept was formulated using the baseline airplane configuration shown on Figure 6. The airplane is an advanced technology subsonic transport which incorporates three advanced, mixed-flow, turbofan engines, a supercritical wing with reduced leading-edge sweep, active controls, and the use of composite materials for both primary and secondary structure. The airplane has a takeoff gross weight of 183,970 kg (405,600 lbm), can carry 400 passengers and has transcontinental range potential.

The planform of the high aspect ratio wing is shown on Figure 7. The wing has a semi-span of approximately 28.7 m (94 ft), with a chord of approximately 12.2 m (40 ft) at the wing-fuselage intersection, and has a planform area of 300 m^2 (3560 ft^2). The structural box is approximately 6.1 m (20 ft) wide at the fuselage sidewall, with a box height of approximately 1.5 m (5 ft), and approximately 0.9 m (3 ft) wide near the wing tip, with a height of approximately 0.3 m (1 ft).

ORIGINAL PAGE IS
OF POOR QUALITY

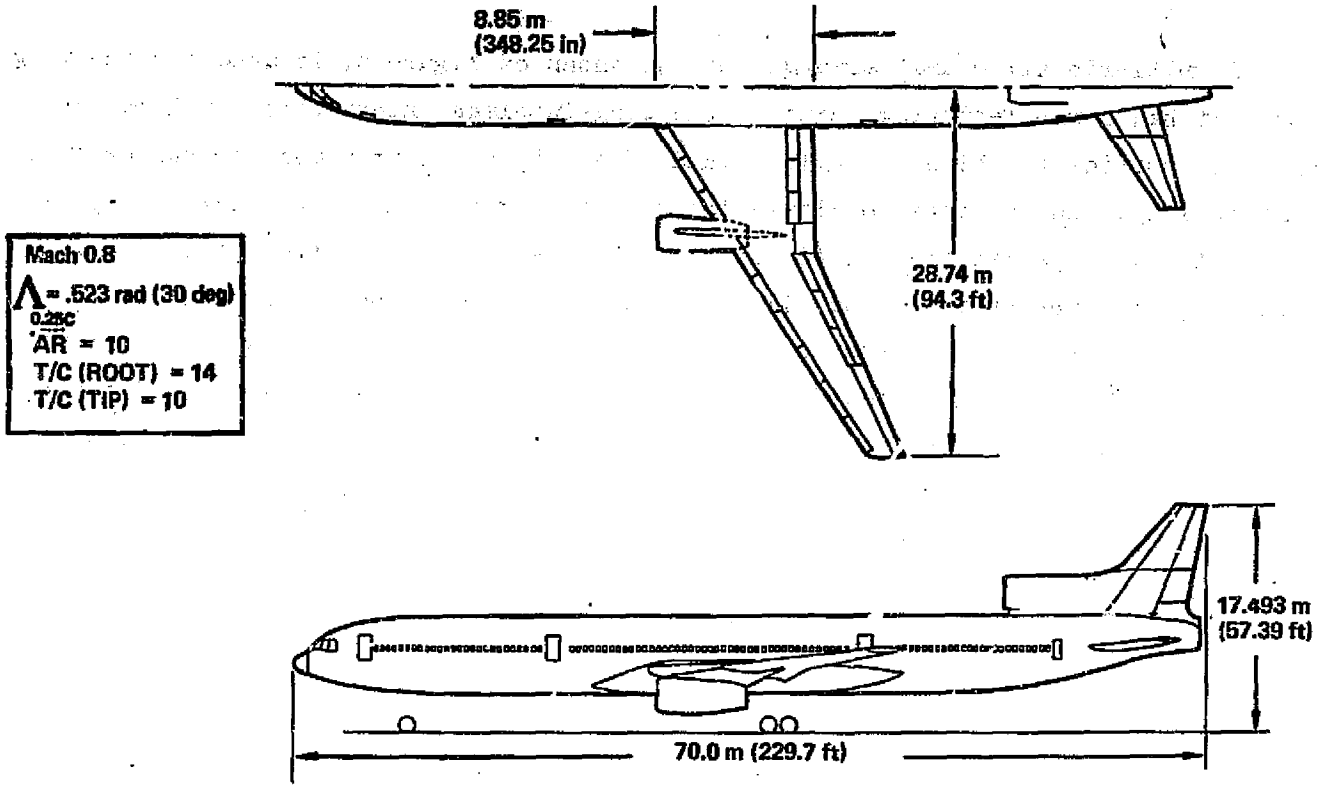

Figure 6. General Arrangement - Baseline Airplane

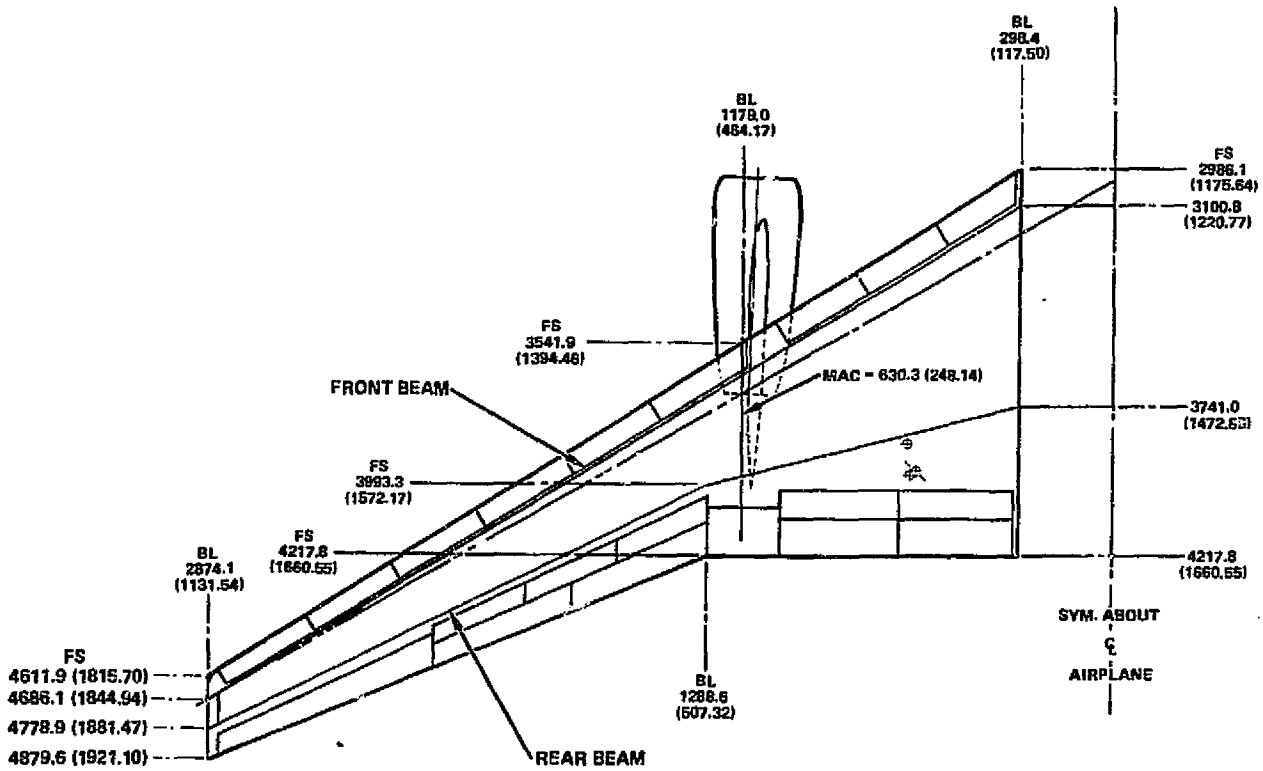

Figure 7. Wing Characteristics of Baseline Airplane

A multi-rib structural arrangement, as shown on Figure 8, is used for the wing box. It has a manufacturing joint at the wing-fuselage intersection, a location which is outside the highest surface load intensity area, provides for easier fuel tank sealing, and reflects consideration of mating requirements for large components fabricated in separate tooling fixtures. A blade-stiffened surface structure is employed, with the stringers parallel to the rear beam in the outer wing region. This stringer orientation permits alignment of the rib normal to rear beam, simplified access door design, and standardized rib-clip design; requires moderate stiffener twist; provides for simplified backup structure design for trailing edge control surface design; and permits relatively simple part and assembly tooling. The structure also employs a one-piece spar design, based on considerations of fail-safety and tooling complexity. As indicated in the figure, provisions are included for the main landing gear support structure and fuel tank requirements. Additional structural interface requirements include the engine pylon attachment structure and mounting provisions for the leading and trailing edge structure. Systems that interface with the wing structural box include the fuel, electrical, hydraulic, deicing and control systems.

The blade-stiffened panel configuration is illustrated on Figure 9, where representative cross-sections for the upper and lower surfaces of the inboard wing region are shown. A constant stiffener spacing of 20.3 cm (8.0 in) is maintained for the entire wing. The lower surface skin thickness ranges from a minimum of 0.572 cm (0.225 in) in the outboard region to 1.32 cm (0.52 in) in the inboard region. Thicker laminates will be required in high load introduction areas such as at the main landing gear attachment. The associated laminate layup configuration varies over the wing surfaces as illustrated on Figure 10 for the typical wing panel structure. Again, structural interface regions and special design aspects such as access doors will require local modifications to these layups.

Manufacturing Approach. - The manufacturing approach is based on augmentation of the Company's existing production facilities. Process development will be performed on prototype equipment not necessarily designed for quantity production of full-scale wing components. Available facilities will include those developed for the composite L-1011 vertical fin production, i.e., the automated layup equipment, ovens and refrigeration capable of supporting the wing development effort, and Lockheed's existing 6.7 m (22.0 ft) diameter, 18.3 (60.0 ft) long autoclave.

ORIGINAL PAGE IS
OF POOR QUALITY

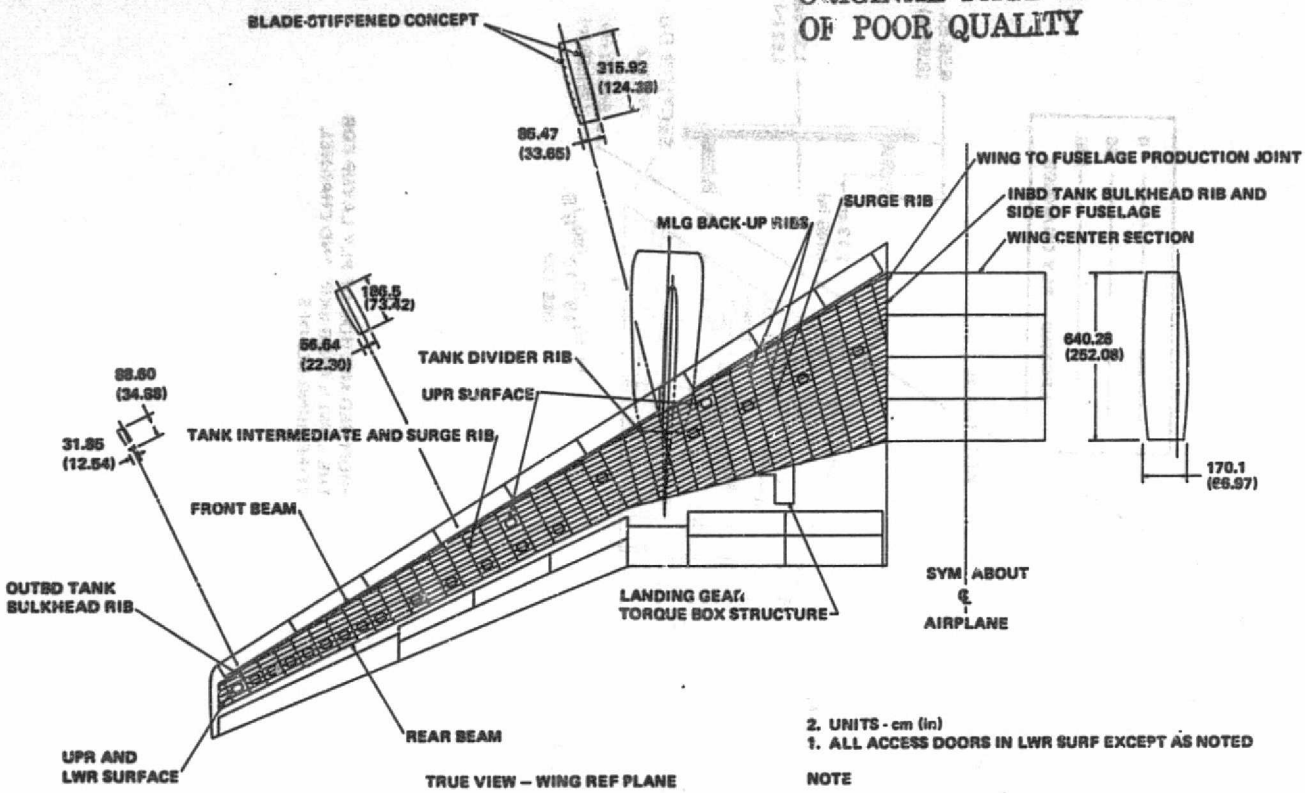

Figure 8. Multi-Rib Structural Arrangement of Baseline Wing

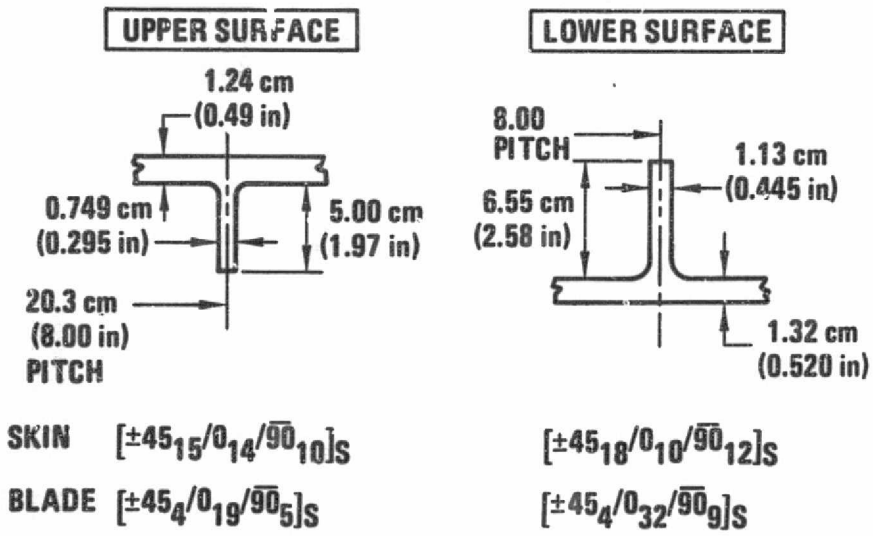

Figure 9. Representative Cross-Sectional Data for Blade-Stiffened Panel

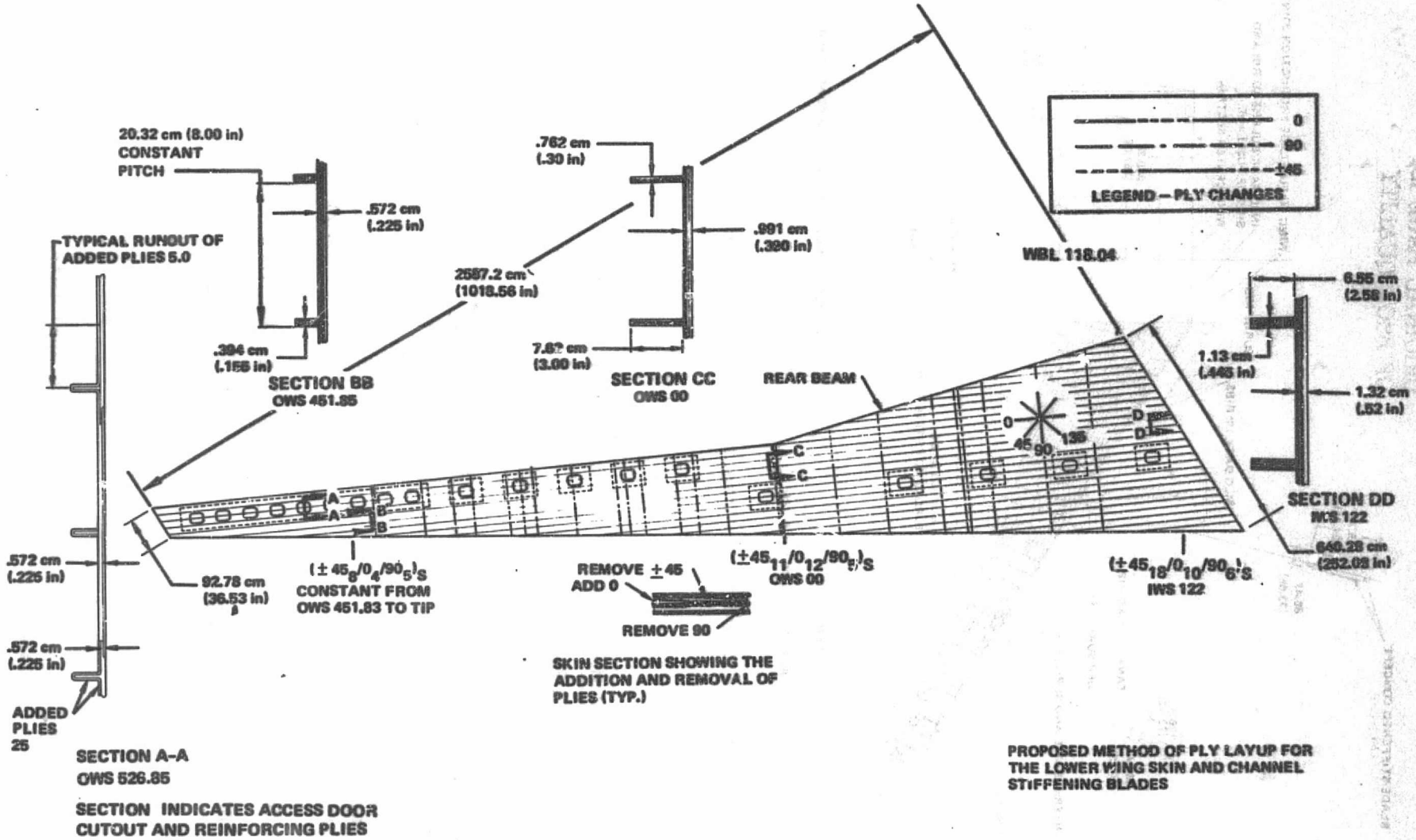

Figure 10. Lower Surface Laminate Layup of Baseline Wing

ORIGINAL PAGE IS
OF POOR QUALITY

The premised manufacturing breakdown is shown in Figure 11. The wing covers are proposed to be laid-up on a master wing tool using a broadgoods dispensing machine. The stiffeners, doublers and fillers are laid-up using the same machine. The stiffeners are placed on the inner surface of the skin, caul plates added, the surface bagged and inserted into the autoclave for curing. An alternative approach is to use a self-contained "project tool" which has an integral heat, vacuum and pressure application system.

The wing spar concept is a one-piece integrally molded laminate with caps, webs and stiffeners cocured. The broadgoods are proposed to be laid-up on a flat table to form doublers, web stiffeners, etc., cut to size, wrapped and stored in a freezer. The basic spar configuration, including partial plies, then is laid-up on a flat tool, transferred to a spar molding tool, doublers and web stiffeners added, and cocured using a hot platten press or an autoclave.

A similar approach is premised for the wing ribs. In this case, however, the rib caps are formed in a matched mold tool and attached to the web with mechanical fasteners. Mechanical fastening of the separately manufactured major wing cover, spar and rib assemblies are also premised to form the completed wing box structure.

Required Technology Department

There are four major areas where development is needed to bring the technology and data base to a level consistent with embarking on a production program using composite wing structure. These are material, design, manufacturing and maintainability. The technology and data in each of these areas must be developed to the point where composit materials present a viable alternative to the use of metals in a new aircraft program, i.e., a cost-competitive alternative.

Material Development. - A key factor in any new aircraft production program will be the selection of materials. While current composite materials could be used for the wing, these materials will be approximately 20 years old by 1985. The current composite materials are deficient in terms of processing

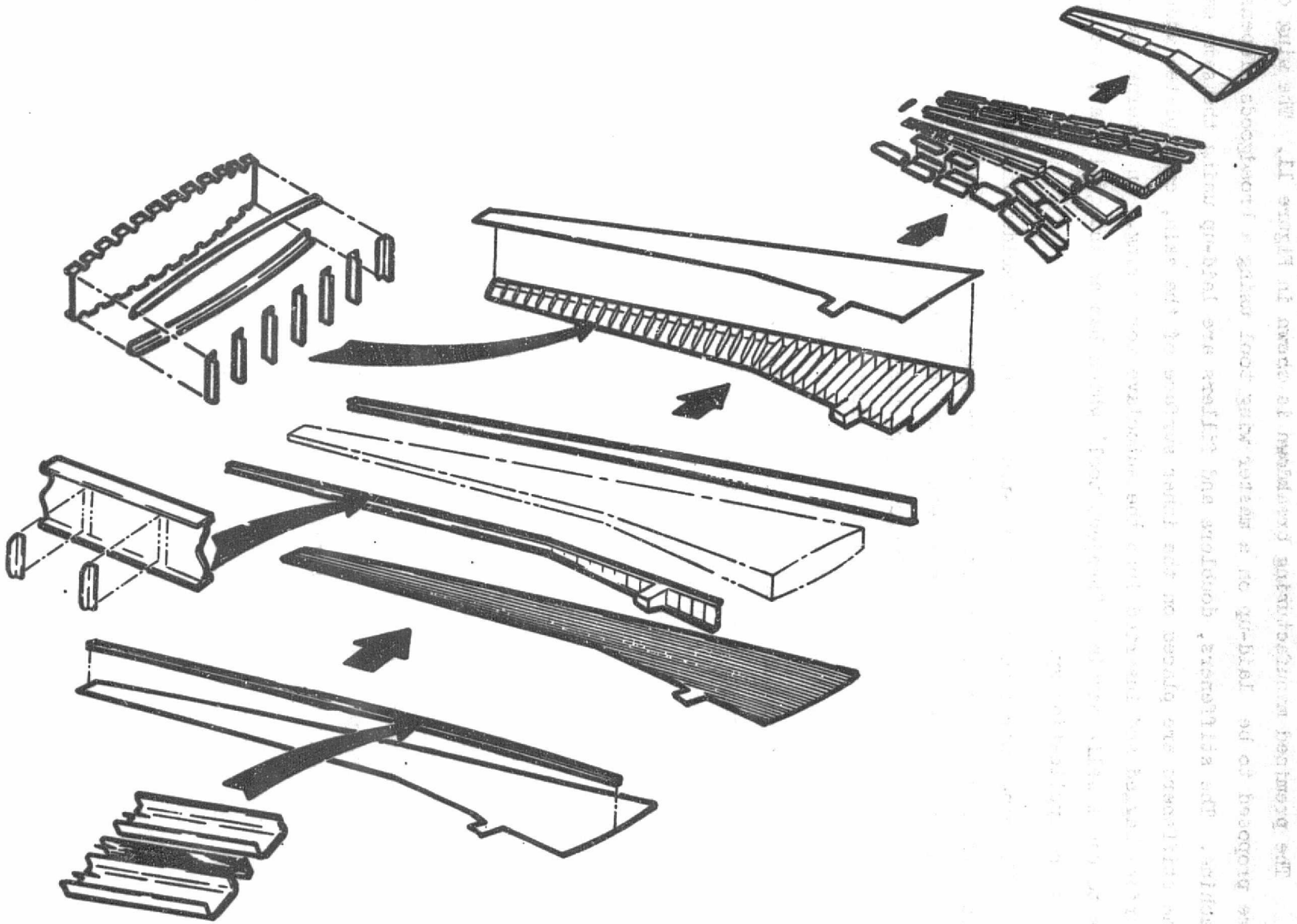

Figure 11. Manufacturing Breakdown of Baseline Wing

ORIGINAL PAGE IS
OF POOR QUALITY

cost, mechanical property scatter, ductility and toughness, as reflected in impact and delamination resistance, flame resistance, and environmental durability. A new improved material system is needed. The major suppliers are developing improved and new class materials. (It is also anticipated that significantly improved metals will be available by 1985, which might make it more difficult for composites to compete.)

With readiness to commit targeted at 1985, there is time to develop an improved material system for design of a new wing. However, a coordinated industry-wide, effort is needed to ensure that the improved material will be ready in time for application to primary wing structure of the next generation of commercial transports; and to prevent duplication and dilution of the material development effort (thereby minimize the development time and cost and, consequently, the subsequent production cost).

There is also a need for multiple material sources which are capable of providing material which is indistinguishable and interchangeable on a ply-by-ply basis. A proprietary, sole-source material procurement environment represents an intolerable vulnerability for a company considering embarking on a billion dollar plus aircraft production program.

Design Technology Development. - Design of an aircraft employing composite wing structure requires the establishment of appropriate design technology and data base. This must include development of structural design data (both, basic material data, and analysis methods), development and verification of structural concepts and approaches, and compilation and documentation of the data.

Additional design data is needed on the response of composite laminates, particularly in terms of their durability and damage tolerance, when subjected to the wing design environment. The wing structure of commercial transport aircraft is highly loaded and subjected to large numbers of loading cycles, including a significant ground-air-ground cycle. The capability of composite structure to withstand this loading environment, in conjunction with temperature and moisture, must be determined. In addition, the effects of foreign object impact on the thick laminates associated with wing surface structure must be determined; such impact damage in thick laminates may not be visible. Finally, the effects of fuel on composite laminates must be established.

Reliable analysis methods are essential for effective application of composite wing structure. The wing is highly loaded; its structural integrity is vital; and composites offer significant weight savings if their inherent properties can be exploited effectively. For example, the industry is currently unable to exploit the post-buckling regime of composite structure - as it can in metals.

Structural approaches for composite wing structure must be developed and evaluated in detail. Major design aspects, e.g., the wing-fuselage interface, the main landing gear interface, and fuel tank containment, must be investigated. The static and dynamic characteristics of composite wing structure must be assessed, including its sensitivity, for various structural approaches. The aeroelastic characteristics of the wing will be important. Finally, weight and cost data for the various approaches must be assembled. Both, structural and manufacturing considerations will have to be included in the evaluations.

Promising structural concepts and approaches will have to be developed and verified by test. The required testing includes: static and fatigue tests, with the effects of impact and environment; damage growth tests; and residual strength tests. Surface panels, including panels with joints or access doors, spars, ribs and structural assemblies must be tested to demonstrate that the structural integrity and durability requirements for the wing can be met.

Finally, a major objective of the design technology development effort will be the development of the guidelines, data and handbooks necessary to support the large production design force which will be required to design and manufacture composite wing structure. These must include composite structure design handbooks, and composite structure analysis methods manuals such as the Lockheed Stress Memo and Structural Life-Assurance Manuals which are currently used to support the design of metallic structures.

Manufacturing Technology Development. - Development of the manufacturing data base requires the development of, both, manufacturing approaches for composite wing production, including material and component producibility and tooling, and cost data for the various approaches. The large components, thick laminates and complex tooling associated with the manufacture of composite wing structure will have significant cost impacts. Manufacturing development also must include development of quality assurance procedures and techniques.

Manufacturing development is configuration sensitive, and must be performed in conjunction with the structural design development effort. The manufacturing development must address realistic composite wing design concepts. The basic problem is the appreciable manufacturing scale-up required for wing production (e.g., the wing semi-span will be approximately 30.5 m (100 ft), the wing box root chord approximately 6.1 m (20 ft), and the box depth approximately 1.5 m (5.0 ft) at the root. Fabrication approaches need to be developed for the large, complex wing structures, and processing data for the thick laminates (with surface panel thicknesses greater than 1.27 cm (0.5 in) is needed.

Candidate tooling approaches for wing production must be delineated, and the tooling and layup development needed to resolve specific manufacturing problems must be identified. Again, the problems are size, laminate thickness, and the variation of thickness and cross-section. The wing surface skins and stiffeners, for example, are tapered, cambered and twisted. These present added complexity in their effects on thermal expansion, shrinkage and warpage during the manufacturing process.

A major objective of the manufacturing technology development, in addition to the development of manufacturing approaches, is the development of valid cost numbers for assessing a production commitment. These must include, both production and tooling cost estimates, and capital facility and equipment requirements, for alternative manufacturing approaches.

Concurrent and in conjunction with the development of manufacturing approaches is the need for development of quality assurance methods and data. These must cover the total manufacturing process, from material acceptance through final assembly inspection. Standards must be established for quality control of materials, processes and hardware, and new test methods must be developed. A major need is the development of cost-effective non-destructive manufacturing inspection techniques; i.e., the development of automated inspection techniques which can handle large, variable thickness, variable cross-section wing structure.

Maintainability Technology Development. - Currently, two NASA composite technology programs are addressing in-service inspection and in-service repair. Each of these technologies will require additional effort to verify their applicability to wing structure. In-service inspection will require NDI techniques. The suitability and effectiveness of these techniques for inspecting thick laminates will have to be assessed. In the case of in-service repair techniques, the fatigue and environmental durability of wing repairs will have to be verified.

Development Programs Summary

The composite wing development program plan developed by this study is summarized on Figure 12. The plan reflects the timing factors and the plan philosophy discussed earlier, as well as the essential technology development identified by the study. Two separate programs have been defined, a material development program and a wing structure development program.

The material development program is defined as a joint government-industry effort, involving all three of the major commercial transport manufacturers, to develop a new material system with improved characteristics that will lead to a cost-competitive composite wing structure.

The wing structure development program defines the scope and magnitude of the effort which Lockheed feels is necessary for it to achieve technology readiness at an acceptable level of risk, for the utilization of composite materials in future transport aircraft. It is believed that each of the other two manufacturers (Boeing and McDonnell Douglas) will require similar composite wing technology development programs.

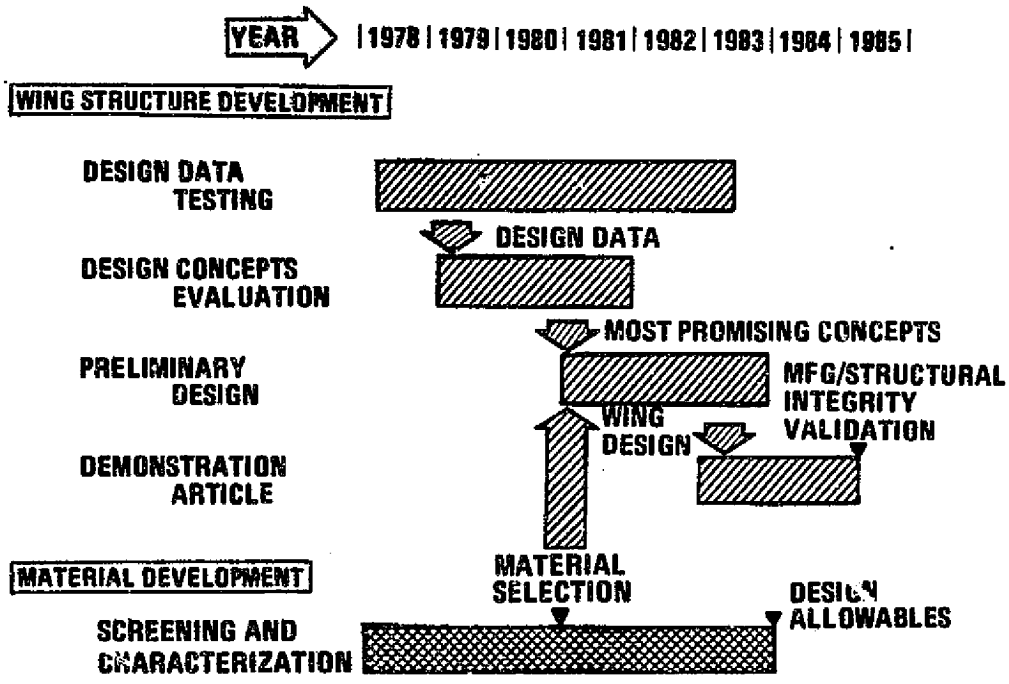

Figure 12. Composite Wing Development Program Schedule

ORIGINAL PAGE IS OF POOR QUALITY

PART 1 - MATERIAL DEVELOPMENT PROGRAM

Introduction

A key factor affecting the decision to produce major aircraft structural components incorporating fibrous composites is the selection of basic construction materials. These materials must be proven by comprehensive testing and evaluation within technological and cost constraints to a point where a commitment to produce a major commercial aircraft component may be undertaken with acceptable risk. An assessment of the state-of-the-art in composite materials technology indicates that this technology has not matured and is still rapidly changing. Analysis of trends shows that materials improvements are imminent which may result in reduced production costs as well as increased structural efficiency, integrity, and reliability.

A major area of concern is the proper selection and validation of the base material system relative to processing cost together with its service performance in wing structures. The inherent nature of fibrous composite materials imposes some unique problems in product design. Those materials may be characterized as "mini-structures" which may be deliberately designed or tailored to incorporate fibers, fiber forms, matrices, and spatial configurations to provide an optimum product for a given application. An infinite number of such systems can be envisioned. Thus, because of cost considerations, standard systems must be devised which are near optimum for multiple applications. Looking at the early history of composite materials development, it appears that there was no deliberate orchestrated approach to design and development of optimum materials systems. Selection was based more on what was available at the time instead of deliberate engineering development. Because of usage beginning with early military hardware development programs, a large data base has beeen accumulated. Thus, these early material systems, by uncontrolled evolution, have become industry standards for structural design.

These material systems could be used as a basis for development of wing structures in commercial transport aircraft. The existing data base would expedite development to some extent. However, there are certain undefined material characteristics (as discussed later) which are considered critical in a commercial aircraft wing design that have not been evaluated to any extent by quantitative testing.

Qualitatively, these characteristics of current standard composite materials are judged to be non-optimum. The probability of devising design solutions for all functional or cost problems posed by non-optimum material properties is judged to be costly. Therefore, a cooperative industry-wide approach to development of new, optimum material systems and standards is proposed as described here-in. The time frame of this program makes this approach feasible. In addition, such an effort would benefit from concurrent structural design development since more definitive design criteria would be readily available for guidance.

The majority of composite hardware development programs in this country have been focused on applications for military supersonic aircraft. As a result, certain classes of composite materials in prepreg tape form have been evolved which ostensibly satisfy design requirements for this type of application. Due to this concentrated development effort, a considerable amount of quantitative property data has been accumulated on a class of graphite/epoxy materials typified by specific proprietary materials such as Narmco 5208/T300, Fiberite 934/T300 and Hercules 3501/AS. This data base, however, primarily covers static strength and stiffness properties which may be readily measured by existing semi-standard quantitative tests such as tensile, compression, flexure, and shear properties.

There are very little data available which cover other critical characteristics or properties required for design of commercial transport aircraft such as: (1) chemical stability and resulting durability of composite elements and composites in hostile chemical, thermal, and stress environments; (2) processing characteristics of pre-impregnated composite materials as a function of fiber reinforcement form and resin rheology; (3) undefined mechanical properties of composites which are dependent on matrix and fiber coupling agent characteristics affecting ductility and toughness (these properties include strain capability and delamination resistance under impact, cyclic, or concentrated loading in a production or service environment); and (4) flammability characteristics of composites including flame propagation rates and retention of structural integrity after fire exposure.

One of the prime reasons for the dearth of data covering the above characteristics is a lack of definitive, quantitative standards including design criteria, specifications, and test methods which cover these particular properties.

Another general safety problem which should be considered in this material development program is the hazard to ground industrial or transmission electrical equipment posed by the accidental release and atmospheric transport of electrically conductive graphite fibers. This problem, pending further definition, has been flagged as critical by various government agencies. In relation to aircraft structure, as presently conceived by this contractor, the problem is primarily concerned with release of fibers when an organic matrix in a composite is completely consumed by fire under crash conditions on the ground in populated areas. This problem may be approached from two standpoints; (1) determination of the statistical probability of occurrence of such an event which may be sufficiently low to be negligible, or (2) modification of the material system to prevent release of fibers into the atmosphere in case of fire.

The latter approach may require tradeoffs in structural properties. However, the approach described herein of using noncrimped fabric with fill fibers of meltable glass or char-forming plastic functioning as a binder under fire conditions appears to offer a possible solution to the problem without undue sacrifice of structural properties. In addition, metal coating of laminates required for other reasons noted herein may also solve the fiber release problem if metallic coatings are properly selected.

Pre-impregnated, non-woven, graphite/epoxy tape is predominately used as the basic building block for current hardware development programs in the aircraft industry. Typical proprietary material systems employed are Narmco 208 resin on Union Carbide Thornel 300 fiber, Fiberite 934 resin on Union Carbide Thornel 300 fiber, and Hercules 3501 resin on Hercules Type AS fiber. These materials are commonly manufactured by casting a thin film of resin and then pressing collimated graphite tow or yarn strands into the resin film to form a graphite/resin tape 5 to 6 mils thick and 2.54 cm (1.0 in) to 30.48 cm (12.0 in) wide. The resins are usually unmodified, highly cross-linked, epoxy polymers formulated to meet elevated service temperature requirements for supersonic aircraft. They are designed to have high flow in order to thoroughly wet fibers during the curing process since

incomplete wetting occurs in the impregnation process. These types of resins are relatively brittle in nature with associated characteristics of low strain capability, poor ductility and toughness. A qualitative assessment of the current material systems indicates that they are not optimum for production of major structural components on commercial subsonic transport aircraft from the standpoints of both fabrication cost and service performance as discussed below:

- The difficulty in handling prepreg non-woven tape combined with high flow epoxy resins and excess resin content leads to high fabrication costs and reproducibility problems due to the complex lay-up and curing processes associated with the tape characteristics.
- The relatively poor ductility and toughness of currently used epoxy resins coupled with questionable fiber-resin bonds leads to poor interlaminar cleavage and delamination resistance. This in turn affects machining, drilling and handling costs in production because of extra precautions required to prevent delamination damage. Service performance is also affected by relatively low delamination resistance leading to reduced damage tolerance and erratic behavior or laminates under impact or cyclic loading conditions.

To realistically commit to production of flight hardware, it must be demonstrated that composite structure is cost-competitive and has the required structural integrity and reliability. A new approach utilizing noncrimped woven graphite fabrics, net resin content, and low, controlled flow, high viscosity resins as a basic building block appears to offer several advantages over current material system types. It is proposed that such materials be investigated in this program.

The ultimate objectives of the materials development and evaluation task are to: (1) simplify material processibility to reduce fabrication cost and provide assurance of reproducibility, (2) improve inherent properties of fibers, fiber finishes, resins and resultant composites which are critical in meeting structural integrity and reliability goals, (3) upgrade the quality level and consistency of prepreg consitituents and composites to minimize property scatter caused by defects, (4) determine effects of material batch variations and process variables

on mechanical properties of cured laminates, (5) establish industry standards covering specifications and test methods, and (6) develop material property data for design based on adequate statistical property data.

Program Summary, Schedule and Resources

The five-task material development and evaluation program encompasses: establishment of industry standards, material development and screening, material characterization and substantiation, investigation of material and process variable effects, and design allowable testing.

The program schedule is presented on Figure 13. The program extends over a 69-month period, with the material selection target date at the end of 1980. This permits incorporation of the new material system in the wing structure development program during the Preliminary Design task and also affords sufficient time for developing design allowable data for a production commitment in the 1985-1986 time period.

Figure 14 presents a summary schedule of estimated program expenditures. Equivalent man-years versus program span are indicated. The total expenditure required for the three-manufacturer material development program is estimated at approximately 115 equivalent man-years.

The technical approach and work to be performed under each task are described in detail in the following sections.

Establishment of Industry Standards

NASA-Industry-FAA Task Force. - A task force of key personnel representing the following agencies will be organized:

- The National Aeronautics and Space Administration - Structures and Materials

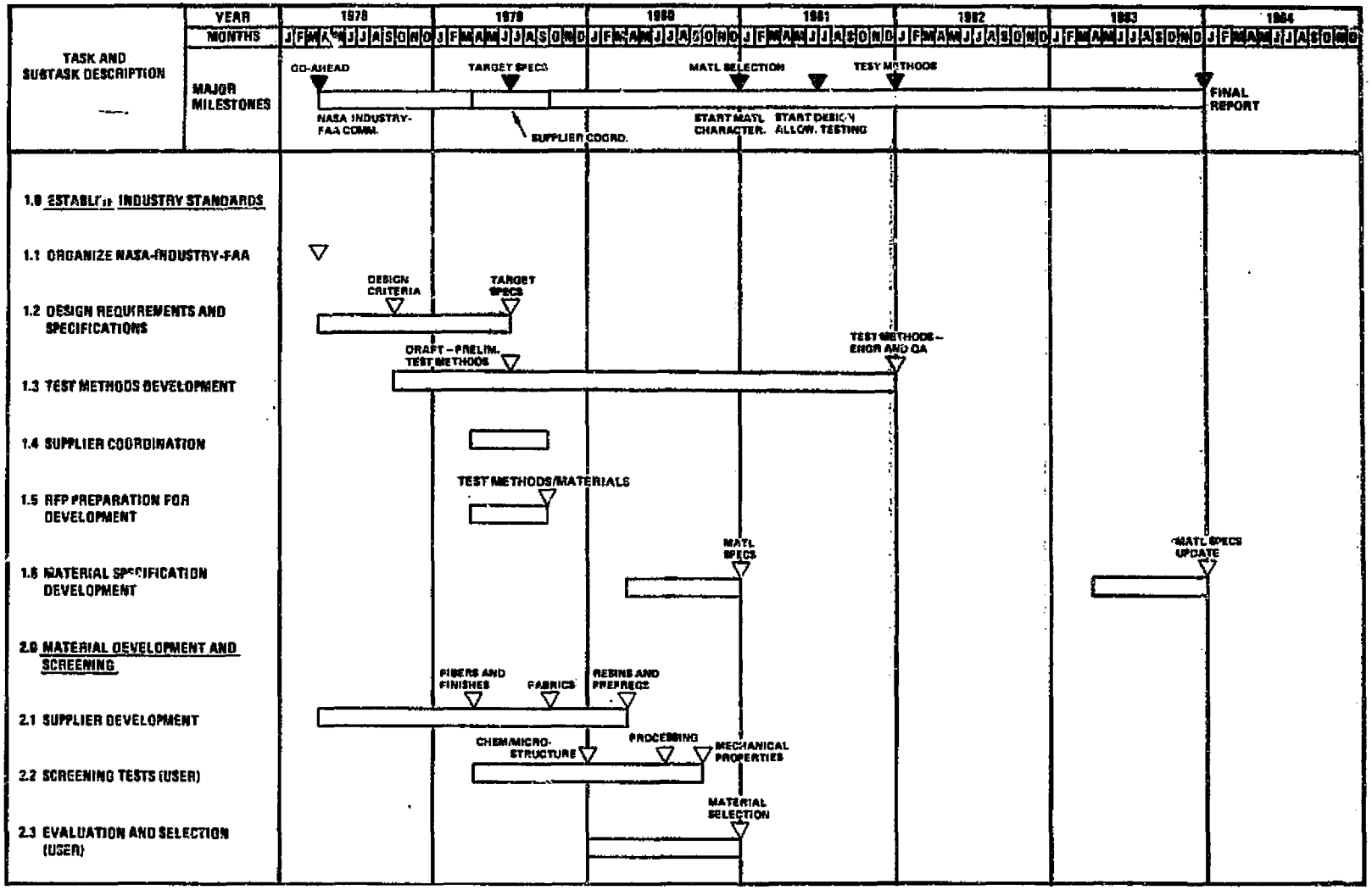

Figure 13. Material Development Program Schedule (Sheet 1 of 2)

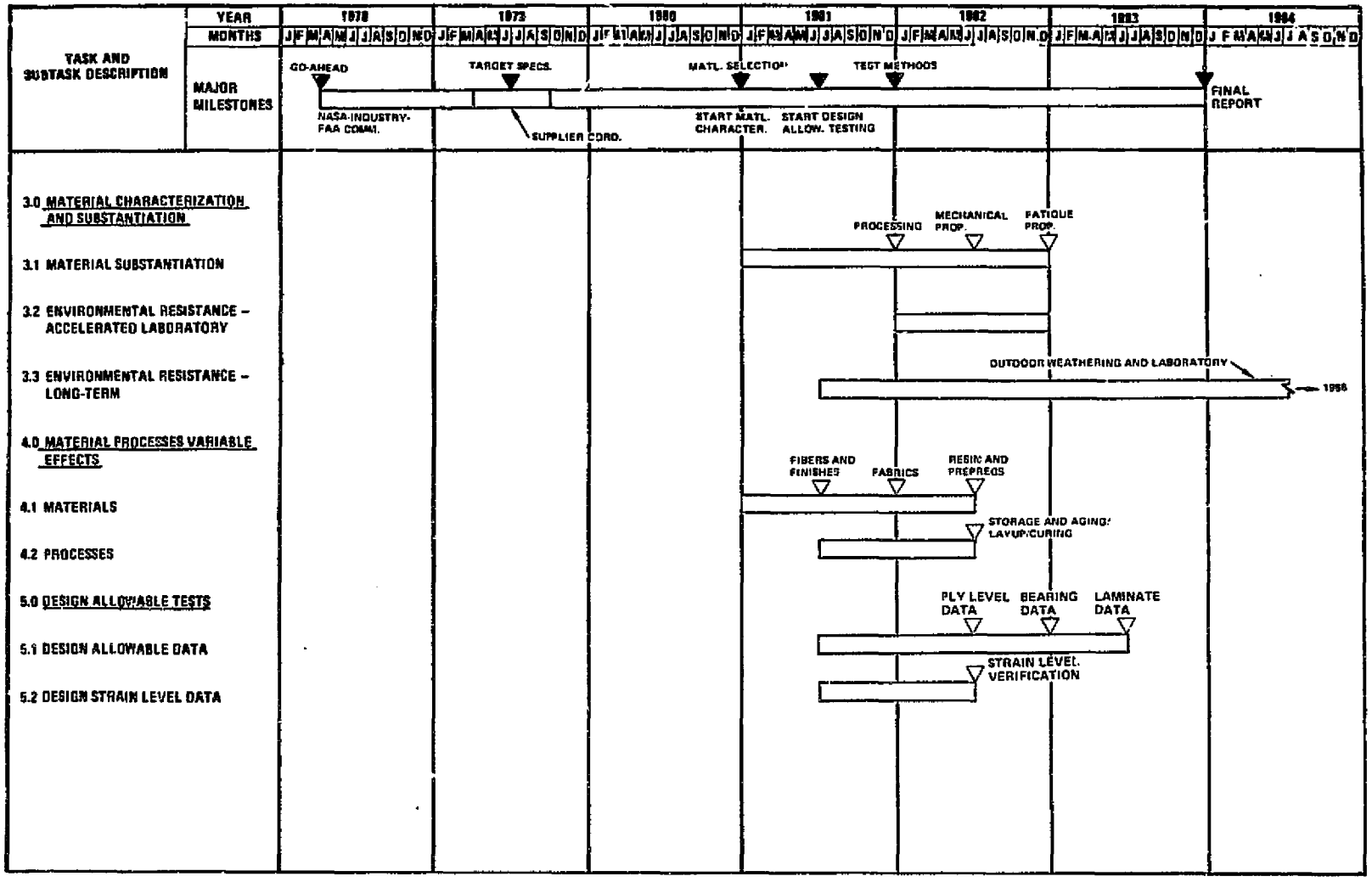

Figure 13. Material Development Program Schedule (Sheet 2 of 2)

ORIGINAL PAGE IS OF POOR QUALITY

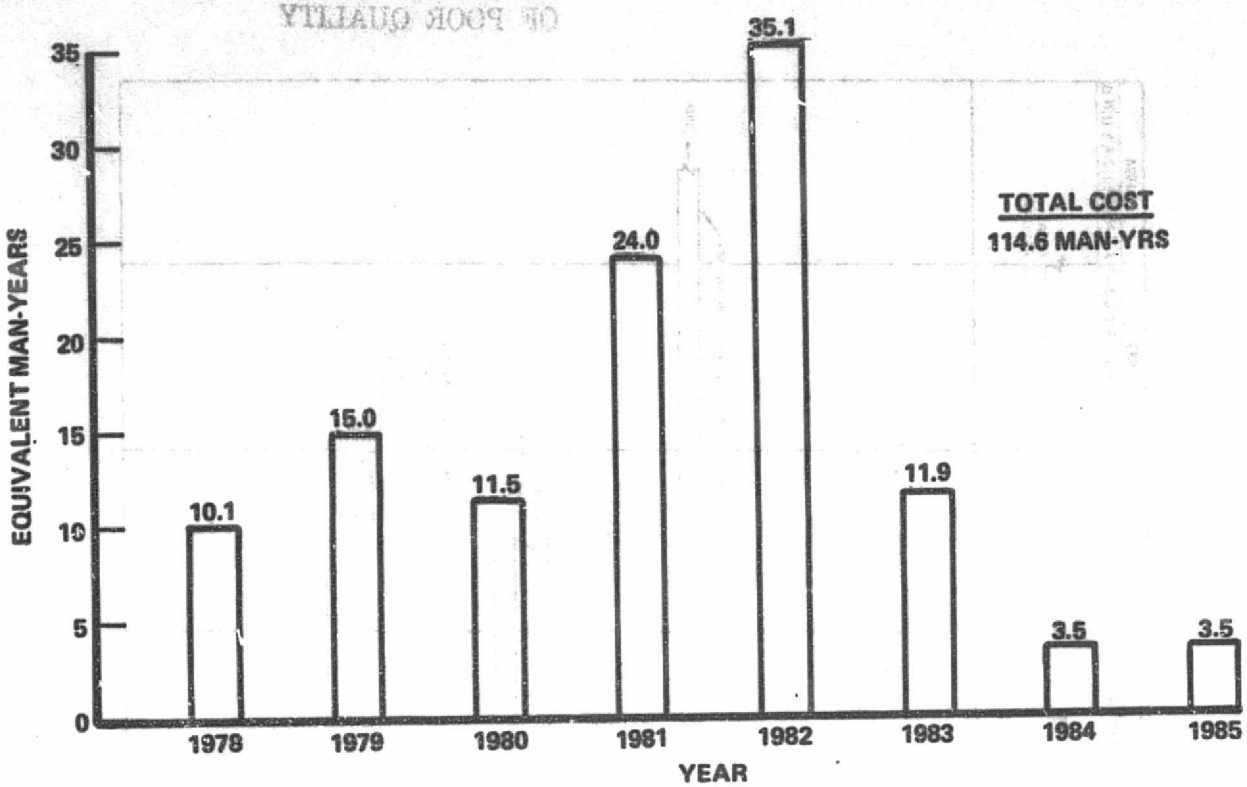

Figure 14. Material Development Program Cost Schedule

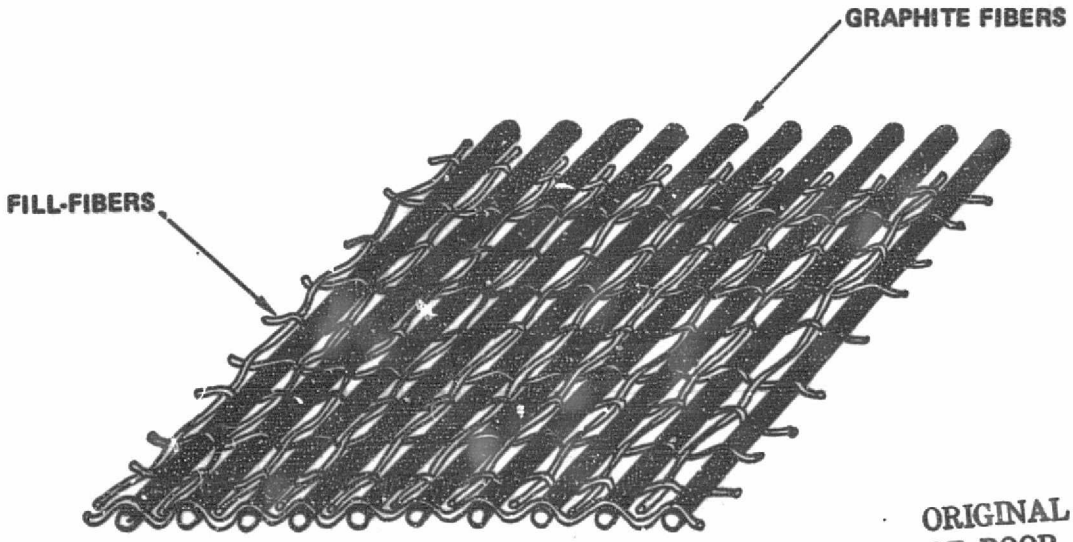

ORIGINAL PAGE IS
OF POOR QUALITY

Figure 15. Unidirectional Noncrimped Weave Fabric

- Fiber suppliers
- Prepreg suppliers
- Airframe manufacturers - Boeing, Lockheed, McDonnell Douglas
- Federal Aviation Administration - Airframe Structures
- Technical advisors - Air Force and university

The purpose of this task force will be to establish industry standards and aid in the definition and implementation of development and test programs as described in Table 26 of Appendix B. Appropriate sub-groups will be organized as required to perform the detail tasks.

Other Development Tasks. - The other subtasks include: establishment of appropriate design requirements and specifications; the development of standardized test methods; providing coordination with the prepreg suppliers; preparing ancillary technology development program plans including test methods, inspection methods and basic material processing; and, development of the material specifications.

Material Development and Screening

Based on target specifications development, material development by suppliers, user evaluation will be initiated.

Supplier Development. - The approach to the development of improved prepregs initially will be limited to resins and graphite fabrics that are commercially available. Those which show the most promise to provide solutions for many of the processing and functional problems encountered with currently used materials will be selected. A comparison of the characteristics of state-of-the-art material systems with those of new target material systems to be investigated in this program is presented in Table 1. Initial development will consist of applying a state-of-the-art resin (5208) on a unidirectional noncrimped graphite fabric (Figure 15). Several other candidate resins will also be applied on the same fabric to provide a basis for comparison. Laminates will then be fabricated from these

TABLE 1. COMPARISON OF CHARACTERISTICS OF STATE-OF-ART AND NEW TARGET MATERIAL

CHARACTERISTIC	TYPICAL STATE-OF-ART 5208/T300 TAPE	INTERIM TARGET MATERIAL	ULTIMATE TARGET MATERIAL
Fiber Type	Thornel 300-3K	Same	Improved Thornel 300 or equivalent
Fiber Finish	Union Carbide 309 Epoxy Solution Coating	Same	Improved Finish
Reinforcement Form	Non-Woven Tape	Noncrimped Fabric Unidirectional 5% Fill Fibers (See Figure 15)	Noncrimped Fabric Unidirectional 5% Fill Fibers (See Figure 15)
Resin Type	5208 Epoxy	Same	Improved Resin
Cure Temperature	450 K (350°F)	Same	<422 K (300°F)
Resin Flow	High - 25 Wt%	Same	Low - 8%
Prepreg Resin Content	High - 40 Wt% Bleeding Required	Net - 34 Wt% Air Bleed Only	Net - 34 Wt% Air Bleed Only
Resin Ductility/ Toughness/Strain Capability	Poor	Same	High Cleavage/ High Impact Resistance
Flame Resistance	Slow Burning	Same	Self-Extinguishing FAA 45° Test

prepregs and comparative evaluation tests conducted including tensile, compression, interlaminar shear, interlaminar cleavage, and a suitable weight-drop impact test. The quality of the laminates will be evaluated further by determining resin/fiber distribution, using suitable chemical tests and micro-analysis methods.

It is anticipated that each of the changes in raw material characteristics described in Table 1 will result in reduced production processing costs, and/or improvement of properties, quality level and consistency of cured laminates. The anticipated effects resulting from material changes are outlined and discussed below:

Effect of Reinforcement Form on Processing Cost: Changing the reinforcement from tape to noncrimped fabric will result in reduced processing labor and cost due to the following:

- Elimination of resin film casting: The fabric is adaptable to resin impregnation by immersion in a resin-solvent solution. Use of the solvent process on fabric eliminates the resin film casting operation commonly used for tapes and provides better fiber wetting. It is recognized that solvent-resin impregnation imposes some problems concerning residual solvent in the preimpregnated product. Hot melt impregnation may also be used for fabric. However, since high viscosity resins are envisioned for this program, it is believed that the solvent impregnation advantages of better wetting and lower cost outweigh any advantages of the hot melt process.

- Higher impregnation production rate: Fabric is available in widths up to 152.4 cm (60.0 in. while the tape is normally limited to 30.48 cm (12.0 in) in width during impregnation by the resin film method. Accordingly, the production rates and prepreg widths of solvent-resin impregnated fabric should be substantially greater than that of tape resulting in a possible cost saving.

- Simplified lay-up: Graphite/epoxy tape is inherently fragile since fibers are bonded together by relatively weak uncured resin. The tape is normally prepared with a paper backing to prevent fiber sepearation during shipping and handling up to the point of laminate lay-up. The backing is removed for lay-up and care must be exercised to prevent fiber separation, especially where compound shapes or corners are involved. Unlike tape, noncrimped fabric is composed of unidirectional graphite fibers restrained by fill fibers of Dacron, Kevlar 49, or glass. Therefore, fibers cannot be separated during backing removal or lay-up operation, resulting in reduced labor and cost.

- Reduced frequency of unacceptable prepreg defects: Due to control problems currently inherent in tape manufacture, there are usually several unacceptable defective areas in every roll of tape. These defects include fiber gaps, laps, crossovers, etc. In fabric on the other hand, fiber collimation

and orientation is controlled by weaving, which potentially eliminates most of the tape-related defects. Moreover, resin uniformity problems will be minimized by use of solvent impregnation instead of the resin film process which is difficult to control. The use of prepregs with fewer defects will minimize labor required for inspection and defect removal as well as for time consumed during machine shutdown and setup in the case of lay-up machines.

Effect of Resin Type and Fiber Finish on Processing Cost: Changes in type of resin, fiber finish, and prepreg resin content are expected to result in reduced processing cost as indicated below:

- Elimination of resin bleeding: Use of low-flow resins combined with elimination of excess resin in preimpregnated material will result in a simplified laminating process because the prebleeding operation will not be required. Moreover, net resin content prepregs will eliminate labor required for fabrication and placement of edge dams, bleeder materials, and extra vacuum bags used in the prebleeding operation. Deletion of prebleeding also saves the cost of bleeder materials and reduces energy requirements.

- Reduced cure temperature and cure cycle time: Use of a low flow resin combined with a low cure temperature, say 394 K (250°F) as opposted to 450 K (350°F), could result in a 50-percent reduction of overall cure cycle time. The reasons for this are:

  (1) High flow resins under production conditions require relatively slow heat-up rates to stage resin and prevent excessive edge bleeding of laminates. Low flow resins, on the other hand, will tolerate faster heat-up rates since excessive edge bleeding is not a problem.

  (2) The lower cure temperature requires less heat-up and cool-down times.

  Reduction of cure cycle time results in fewer equipment and tool replicates and cost required to meet a given production rate. A saving in heat energy cost is also realized.

- Reduced heat resistance requirements for tool and bagging materials: Reduced cure temperature, say 394 K (250°F) as opposed to 450 K (350°F), generally allows the use of less expensive and more easily workable materials for tools, bag, and bag sealing. In addition, the use of lower temperatures tends to increase tool and rubber bag life. These factors result in substantially overall lower fabrication costs.

- Resistance to delimination during machining and handling: Use of a tough, ductile resin combined with a fiber finish that produces a higher strength fiber-resin bond will provide laminates with increased cleavage and delamination resistance. This will result in lower production costs during machining and drilling operations. Additional cost savings will occur since fewer rejections will result from damage inflicted during handling and assembly.

Effect of Reinforcement Form and Resin Type on Laminate Properties and Quality: The use of noncrimped fabric combined with low flow resin instead of tape incorporating a high flow resin is expected to provide better control of fiber spacing, collimation, alignment, and resin distribution resulting in several potential structural performance benefits such as:

- Improved interfiber stress transfer and distribution.

- More uniform transverse tensile strength.

- Minimum property scatter resulting in higher statistical design allowables.

Effect of Resin and Fiber Finish Type on Laminate Properties: A tough, ductile resin system such as an elastomer-modified epoxy coupled with a fiber finish which produces a good fiber-resin bond has the potential to produce laminates with a more forgiving matrix and increased interlaminar cleavage/delamination resistance resulting in:

- Higher impact resistance and damage tolerance in the delamination failure mode.

- Better fatigue resistance by minimizing premature delamination failures.

- More resistance to propagation of interlaminar unbonded flaws or voids.
- Higher strain capability to failure resulting from resin forgiveness.

Screening Tests: - A preliminary test plan is presented in Table 2. This proposed plan is designed to include a minimum number of test parameters concerning critical properties but sufficiently comprehensive to provide a valid basis for trade-off studies and material selection. The screening tests for chemical/micro-structure, processing and mechanical properties will be based upon standardized criteria and test methods developed in the previous task. The number of tests given in the matrix may be reduced if the program is refined and revamped using statistical techniques.

It should be noted that the proposed test plan (and subsequent plans) were formulated in sufficient detail to scope the effort and to estimate resources. The final plans will be developed by the government-industry task force with the cooperative inputs of the participants.

Evaluation and Selection. - When sufficient test data are generated, it is planned to conduct comprehensive property/cost trade-off studies leading to selection of material systems worthy of further in-depth testing and structural development.

Material Characterization and Substantiation

In order to reduce risk associated with use of new material systems in primary structure, a comprehensive testing program to prove selected base materials in meeting all design and manufacturing conditions is mandatory. Such a program, as presently conceived, is presented in Table 3.

Material and Process Variables Effects

In order to establish tolerable limits on variables in material and process specifications, the effects of these variables on finished composite properties must be investigated. Variable limits as established by specification will also affect establishment of design allowables since property scatter may be increased. A test plan is presented in Table 4.

TABLE 2. SUMMARY OF MATERIAL SCREENING TESTS

ITEM NO.	DESCRIPTION: TYPE OF EVALUATION	DESCRIPTION: MATERIAL	DESCRIPTION: MATERIAL VARIATIONS	NUMBER OF TESTS	TYPE OF TEST	TEST VARIABLES	SPECIMEN CONFIGURATION	PURPOSE OF TEST
2.2	CHEMICAL AND MICROGRAPHIC ANALYSIS	A. FIBERS	5 FIBER TYPES UNFINISHED	225	CHEMICAL ANALYSIS; 3 TYPES OF TESTS	5 RANDOM SAMPLES, EACH OF 3 TYPES OF TOW; 15 TOTAL SAMPLES	3.05m (10 FT) SAMPLES 3000, 6000 AND 12000 FILAMENT TOW	DETERMINE IMPURITIES, DEGREE OF GRAPHITIZATION, CHEMICAL AND THERMAL STABILITY
				150	MICRO ANALYSIS; 2 TYPES: STANDARD, ELECTRON			DETERMINE MICROSTRUCTURE FLAWS, UNIFORMITY
		B. FIBER FINISHES	2 FIBER TYPES 6 FINISHES	150	CHEMICAL ANALYSIS; 3 TYPES OF TESTS	5 RANDOM SAMPLES, EACH OF 10 TYPES	3.05m (10 FT) SAMPLES 3000 FILAMENT TOW	DETERMINE COMPOSITION, CHEMICAL AND THERMAL STABILITY
		C. FABRICS	6 TYPES NON-CRIMP FABRICS;	30	MACRO ANALYSIS	5 RANDOM SAMPLES, EACH OF 6 TYPES	0.4m² (10 YD²) SAMPLES	DETERMINE WEAVING PATTERN UNIFORMITY, FIBER DIRECTION DISTORTION, ETC.
			3 UNIDIRECTIONAL & 3 BIDIRECTIONAL	30	MICRO ANALYSIS			DETERMINE EXTENT OF FIBER WEAVING DAMAGE
		D. RESINS	10 TYPES	90	CHEMICAL ANALYSIS; 3 TYPES OF TESTS	3 BATCHES, EACH OF 10 TYPES	UNCURED RESIN	DETERMINE COMPOSITION, CHEMICAL AND THERMAL STABILITY
		E. PREPREGS	30 SYSTEMS: 5 RESINS; 3 FIBER FORMS; 2 FIBER FINISHES	450	CHEMICAL ANALYSIS; 3 TYPES OF TESTS	1 BATCH EACH OF 30 TYPES; 5 SAMPLES EACH BATCH	41.8m² (50 YD²) SAMPLES	DETERMINE RESIN CONTENT AND DISTRIBUTION, VOLATILES
				150	MICRO ANALYSIS			DETERMINE EXTENT AND UNIFORMITY OF RESIN - FIBER WETTING
	EVALUATION OF PROCESSING CHARACTERISTICS	A. PREPREGS	15 SYSTEMS: 5 RESINS; 3 FIBER FORMS; 1 FIBER FINISH	405	THERMAL ANALYSIS: DIFFERENTIAL GRAVIMETRIC, AND MECHANICAL; 3 TYPES OF TESTS	3 BATCHES, EACH OF 15 TYPES; 3 REPLICATES, EACH BATCH	16.7m²(20 YD²) SAMPLES	DETERMINE OPTIMUM CURE CYCLES BASED ON RESIN RHEOLOGY-TIME, TEMPERATURE, VISCOSITY, OUTGASSING, EXOTHERM, ENDOTHERM, RELATIONSHIPS
		B. CURED LAMINATES		45	LAMINATE FABRICATION TRIALS	3 PROCESS VARIATIONS	30.48 X 38.58 X 0.20 cm (12.0 X 14.9 X 0.08 IN.) PANEL	DEVELOP OPTIMUM LAY-UP, BLEEDING, CURING TECHNIQUES
				45	CHEMICAL: RESIN CONTENT, VOIDS			EVALUATE QUALITY OF TRIAL LAMINATES
				45	MICRO ANALYSIS: VOIDS			

ORIGINAL PAGE IS OF POOR QUALITY

TABLE 2. SUMMARY OF MATERIAL SCREENING TESTS (Continued)

ITEM NO.	DESCRIPTION: TYPE OF EVALUATION	DESCRIPTION: MATERIAL	DESCRIPTION: MATERIAL VARIATIONS	NUMBER OF TESTS	TYPE OF TEST	TEST VARIABLES	SPECIMEN CONFIGURATION	PURPOSE OF TEST
2.2	MECHANICAL PROPERTIES	NEAT RESIN	10 TYPES	130	TENSILE STRENGTH & MODULUS	(1) 219 K (-65°F), R.T., 366 K (199°F), 366 K (199°F) WET; 3 REPLICATES	1.27 X 15.24 X 0.25 cm (0.5 X 6.0 X 0.10 IN.) DOG BONE	ROUGH SCREENING
				100	TENSILE CREEP	(1) R.T., 366 K (199°F) 5 REPLICATES	1.27 X 15.24 X 0.25 cm (0.5 X 6.0 X 0.10 IN.) DOG BONE	ROUGH SCREENING
		COMPOSITE LAMINATES	30 SYSTEMS: 6 RESINS, 3 FIBER FORMS, 2 FIBER FINISHES	90	0° TENSILE	R.T.; 3 REPLICATES	1.27 X 20.7 X 0.18 cm (0.5 X 10.5 X 0.141 IN.)	FIBER TENSILE
				300	±45° TENSILE	(1) 219 K (-65°F), R.T., 366 K (199°F), 366 K (199°F) WET; 3 REPLICATES	2.54 X 20.7 X 0.23 cm (1.0 X 10.5 X 0.091 IN.)	MATRIX BEHAVIOR
				315	0° COMPRESSION		2.54 X 20.7 X 0.15 cm (1.0 X 10.5 X 0.061 IN.)	FIBER COMPRESSION; INTER-LAMINAR TENSION OF RESIN & FIBER FINISH BOND
				300	0° INTERLAMINAR SHEAR		0.64 X 1.52 X 0.23 cm (0.25 X 0.6 X 0.091 IN.)	SHEAR OF RESIN & FIBER FINISH BOND
				300	0°/±45° INTERLAMINAR CLEAVAGE		2.54 X 30.48 cm (1.0 X 12 IN.); 2 OR 4 PLIES	DELAMINATION RESISTANCE
				100	0°/±45° IMPACT: WEIGHT DROP-EDGE RESTRAINED PANEL	219 K (-65°F); R.T., 3 REPLICATES	50.8 X 50.8 cm (20 X 20 IN.) X 12 PLY PANEL	DELAMINATION RESISTANCE
				300	±45° TENSILE CREEP	R.T., 366 K (199°F) 5 REPLICATES	2.54 X 20.7 X 0.23 cm (1.0 X 10.5 X 0.091 IN.)	IDENTIFY ANY CREEP PROBLEM
	FLAMMABILITY	COMPOSITE LAMINATES	15 SYSTEMS: 5 RESINS, 3 FIBER FORMS	100	FLAME RESISTANCE FAA ±45° METHOD	(1) R.T., 366 K (199°F) 2 THICKNESSES, 2 LAY-UPS, 3 REPLICATES	7.62 X 30.5 cm (3.0 X 12.0 IN.) COUPON	BURNING RATE & SELF-EXTINGUISHING CHARACTERISTICS
				90	BURNING SMOKE INDEX & GAS ANALYSIS	R.T.; 2 THICKNESSES, 1 LAY-UP, 3 REPLICATES	16.18 X 16.24 cm (6 X 6 IN.) PANEL	TOXICITY

NOTE: (1) ELEVATED TEMPERATURE TESTS MAY BE RUN AT 422 K (300°F) ON 3 TYPES RESINS SUITABLE FOR HIGH TEMPERATURE APPLICATIONS.

TABLE 3. SUMMARY OF MATERIAL SUBSTANTIATION TESTS

ITEM NO.	DESCRIPTION: TYPE OF EVALUATION	DESCRIPTION: MATERIAL VARIATIONS	NUMBER OF TESTS	TYPE OF TEST	TEST VARIABLES	SPECIMEN CONFIGURATION	PURPOSE OF TEST
3.1	LAMINATE STATIC MECHANICAL PROPERTIES	4 MATERIAL SYSTEMS, 2 RESINS: 366 K (180°F) AND 422 K (300°F); SERVICE TEMPERATURE, 2 FABRICS: THIN & THICK	120	0° TENSILE	219 K (-65°F), R.T., 366 K OR 422 K (180°F OR 300°F) DRY & WET; 6 CONDITIONS; 5 REPLICATES	1.27 X 20.7 X 0.19 cm (0.5 X 10.5 X 0.04 IN.)	FIBER TENSILE
			120	±45° TENSILE		2.54 X 20.7 X 0.20 cm (1.0 X 10.5 X 0.08 IN.)	MATRIX – FIBER FINISH BEHAVIOR
			120	0°/±45° TENSILE		2.54 X 20.7 X 0.20 cm (1.0 X 10.5 X 0.08 IN.)	REPRESENTATIVE STRUCTURAL LAY-UP
			120	0° COMPRESSION		2.54 X 20.7 X 0.19 cm (1.0 X 10.5 X 0.06 IN.)	FIBER COMPRESSION INTERLAMINAR TENSION OF RESIN & FIBER FINISH BOND
			120	0°/±45° COMPRESSION		2.54 X 20.7 X 0.20 cm (1.0 X 10.5 X 0.08 IN.)	REPRESENTATIVE STRUCTURAL LAY-UP
			120	0° INTERLAMINAR SHEAR		0.64 X 1.52 X 0.20 cm (0.25 X 0.6 X 0.08 IN.)	SHEAR OF RESIN & FIBER FINISH BOND INTERLAMINAR
			120	0°/±45° INTERLAMINAR SHEAR		0.64 X 1.52 X 0.20 cm (0.25 X 0.6 X 0.08 IN.)	REPRESENTATIVE STRUCTURAL LAY-UP
			120	0°/±45° INTERLAMINAR CLEAVAGE		2.54 X 3.05 cm (1.0 X 1.2 IN.) 2 OR 4 PLIES	DELAMINATION RESISTANCE
			48	0°/±45° INPLANE SHEAR (RAIL)	R.T. DRY & WET; 2 CONDITIONS; 5 REPLICATES	7.6 X 15.2 X 0.20 cm (3.0 X 6.0 X 0.08 IN.)	SHEAR DISTORTION OF FIBER PATTERN AS FUNCTION OF MATRIX
			48	0°/±45° IMPACT WEIGHT DROP-EDGE RESTRAINED PANEL	219K (-65°F), R.T.; 2 CONDITIONS 5 REPLICATES	50.8 X 50.8 cm (20.0 X 20.0 IN.), 12 PLY	DELAMINATION RESISTANCE
			30	±45° TENSILE CREEP	R.T., 366 K OR 422 K (180°F OR 300°F), DRY & WET; 4 CONDITIONS; 5 REPLICATES	2.54 X 20.7 X 0.20 cm (1.0 X 10.5 X 0.08 IN.)	VERIFY CREEP RESISTANCE
	LAMINATE FATIGUE PROPERTIES	4 MATERIAL SYSTEMS; 2 RESINS: 366 K (180°F) AND 422 K (300°F) SERVICE TEMPERATURE, 2 FABRICS: THIN & THICK	360	FATIGUE-CONSTANT AMPLITUDE (R = -1)	2 LAYUPS: FIBER DOMINANT AND MATRIX DOMINANT 3 STRESS LEVELS: 40%, 60%, AND 80% OF ULTIMATE; 15 REPLICATES	2.54 X 20.7 X 0.20 cm (1.0 X 10.5 X 0.08 IN.)	VERIFY FATIGUE RESISTANCE

ORIGINAL PAGE IS OF POOR QUALITY

TABLE 3. SUMMARY OF MATERIAL SUBSTANTIATION TESTS (Continued)

ITEM NO.	DESCRIPTION: TYPE OF EVALUATION	DESCRIPTION: MATERIAL VARIATIONS	NUMBER OF TESTS	TYPE OF TEST	TEST VARIABLES	SPECIMEN CONFIGURATION	PURPOSE OF TEST
3.1	LAMINATE FLAMMABILITY, SMOKE TOXICITY	4 MATERIAL SYSTEMS, 2 RESINS; 356 K (180°F) AND 422 K (300°F); SERVICE TEMPERATURE, 2 FABRICS: THIN & THICK	192	COUPON SCALE FLAME RESISTANCE FAA ±45° METHOD	2 PRE-CONDITIONS: BEFORE & AFTER SIMULATED WEATHERING 2 TEMPERATURES: R.T., 356 K OR 422 K (180°F OR 300°F); 2 LAY-UPS; 2 THICKNESSES; 3 REPLICATES	7.5 X 30.5 cm (3.0 X 12.0 IN.) COUPON	VERIFY FLAME RESISTANCE
			192	BURNING SMOKE INDEX AND GAS ANALYSIS		10.2 X 15.2 cm (4.0 X 6.0 IN.) PANEL	DETERMINE TOXICITY
			128	PANEL SCALE FLAME PROPAGATION – RADIANT FLUX TEST	2 ENERGIES: 2.5 AND 5 WATTS/CM² FT 2 POSITIONS: VERTICAL AND HORIZONTAL; 2 LAY-UPS; 2 THICKNESSES; 2 REPLICATES	1.22 X 1.22 m (4.0 X 4.0 FT) PANEL	DETERMINE FLAME PROPAGATION RATES & TIME TO IGNITION
	LAMINATE FLUID RESISTANCE		1080	±45° TENSILE STRENGTH AND MODULUS	3 MATERIAL BATCHES; 6 FLUID EXPOSURES: FUEL, OIL, HYDRAULIC FLUID, AND 3 CLEANING SOLVENTS	2.54 X 28.7 X 0.20 cm (1.0 X 10.5 X 0.08 IN.)	DETERMINE SUBSTITUTE EFFECTS OF FLUID EXPOSURE ON MATRIX
			1080	±45° TENSILE CREEP	3 EXPOSURE TIMES 5 REPLICATES	2.54 X 28.7 X 0.20 cm (1.0 X 10.5 X 0.08 IN.)	
3.2	ENVIRONMENTAL – ACCELERATED WEATHERING – LABORATORY. LAMINATE PROPERTIES BEFORE AND AFTER EXPOSURE – STRESSED AND UNSTRESSED	4 MATERIAL SYSTEMS; 2 RESINS: 356 K (180°F) AND 422 K (300°F) SERVICE TEMPERATURE, 2 FABRICS: THIN & THICK	594	CHEMICAL AND MICROGRAPHIC ANALYSIS	2 EXPOSURE CONDITIONS: STRESSED AND UNSTRESSED; 4 EXPOSURE TIMES: 0, 3, 6, 12 MONTHS; 2 LAY-UPS; 3 TYPES OF TESTS; 3 REPLICATES	7.5 X 30.5 X 0.20 cm (3.0 X 12.0 X 0.08 IN.)	DETERMINE CHEMICAL & MICROSTRUCTURE CHANGES CAUSED BY ENVIRONMENTAL EXPOSURE
			1280	±45° TENSILE	2 EXPOSURE CONDITIONS: STRESSED AND UNSTRESSED; 4 EXPOSURE TIMES: 0, 3, 6, 12 MONTHS; 4 TEST CONDITIONS: 210 K (-65°F), R.T., 356 K OR 422 K (180°F OR 300°F) DRY AND WET; 10 REPLICATES	2.54 X 28.7 X 0.20 cm (1.0 X 10.5 X 0.08 IN.)	MATRIX & RESIN FIBER BOND DEGRADATION
			1280	±45° TENSILE CREEP		2.54 X 28.7 X 0.20 cm (1.0 X 10.5 X 0.08 IN.)	

TABLE 3. SUMMARY OF MATERIAL SUBSTANTIATION TESTS (Continued)

ITEM NO.	DESCRIPTION: TYPE OF EVALUATION	DESCRIPTION: MATERIAL VARIATIONS	NUMBER OF TESTS	TYPE OF TEST	TEST VARIABLES	SPECIMEN CONFIGURATION	PURPOSE OF TEST
3.2	ENVIRONMENTAL – ACCELERATED WEATHERING – LABORATORY. LAMINATE PROPERTIES BEFORE AND AFTER EXPOSURE – STRESSED AND UNSTRESSED	4 MATERIAL SYSTEMS, 2 RESINS; 358 K (180°F) AND 422 K (300°F); SERVICE TEMPERATURE, 2 FABRICS: THIN & THICK	1280	0°/±45° COMPRESSION		2.54 X 26.7 X 0.20 cm (1.0 X 10.5 X 0.08 IN.)	FIBER, FIBER FINISH, MATRIX DEGRADATION – REPRESENTATIVE APPLICATION LAY-UP
			1280	0°/±45° FATIGUE (R = -1)		2.54 X 26.7 X 0.20 cm (1.0 X 10.5 X 0.08 IN.)	
			192	0°/±45° IMPACT	SAME AS ABOVE EXCEPT: 2 TEST CONDITIONS AT 219 K (-65°F), R.T.; 3 REPLICATES	50.8 X 50.8 X 0.20 cm (20.0 X 20.0 X 0.08 IN.) PANEL	DEGRADATION OF DELAMINATION RESISTANCE
	ENVIRONMENTAL CYCLING – LABORATORY FATIGUE STRESS HUMIDITY – TEMPERATURE EXPOSURE CYCLES LAMINATE PROPERTIES BEFORE AND AFTER EXPOSURE		864	CHEMICAL AND MICROGRAPHIC ANALYSIS	3 STRESS LEVELS: 40%, 60%, 80% ULTIMATE; 4 EXPOSURE TIMES: 0, 3, 6, 12 MONTHS; 2 LAY-UPS; 3 TEST TYPES; 3 REPLICATES	2.54 X 26.2 X 0.20 cm (1.0 X 10.5 X 0.08 IN.)	CHEMICAL & MICROSTRUCTURE CHANGES
			1020	±45° TENSILE	3 STRESS LEVELS: 40%, 60%, 80% ULTIMATE	2.54 X 26.7 X 0.20 cm (1.0 X 10.5 X 0.08 IN.)	MATRIX, RESIN – FIBER BOND DEGRADATION
			1920	±45° TENSILE CREEP	4 EXPOSURE TIMES: 0, 3, 6, 12 MONTHS; 4 TEST CONDITIONS: 219 K (65°F), R.T., 358 K OR 422 K (180°F OR 300°F) DRY & WET; 10 REPLICATES	2.54 X [illegible] X 0.20 cm (1.0 X 10.5 X 0.08 IN.)	
			1920	0°/±45° COMPRESSION			FIBER, MATRIX, RESIN – FIBER BOND DEGRADATION
			288	0°/±45° IMPACT	SAME AS ABOVE EXCEPT: 2 TEST CONDITIONS, 219 K (-65°F), R.T., 3 REPLICATES	20.3 X 50.8 X 0.20 cm (8.0 X 20.0 X 0.08 IN.)	DEGRADATION OF DELAMINATION RESISTANCE
			120	0°/±45° EXPOSURE CYCLES TO FAILURE	3 STRESS LEVELS; 10 REPLICATES	2.54 X 26.7 X 0.20 cm (1.0 X 10.5 X 0.08 IN.)	STRESS LEVEL/LIFE CORRELATION
	ENVIRONMENTAL – OUTDOOR WEATHERING LAMINATE PROPERTIES BEFORE AND AFTER EXPOSURE – STRESSED AND UNSTRESSED	4 MATERIAL SYSTEMS; 2 RESINS: 358 K (180°F) AND 422 K (300°F) SERVICE TEMPERATURE, 2 FABRICS: THIN & THICK	1536	CHEMICAL & MICROGRAPHIC ANALYSIS	4 WEATHERING SITES: POINT LOMA, LOS ANGELES AIRPORT, NORFOLK, FLORIDA; 4 EXPOSURE TIMES: 0, 1, 3, 5 YEARS; 2 CONDITIONS: STRESSED AND UNSTRESSED; 2 LAY-UPS; 2 TYPES OF TESTS; 3 REPLICATES	7.6 X 30.5 X 0.20 cm (3.0 X 12.0 X 0.08 IN.)	DETERMINE CHEMICAL AND MICROSTRUCTURE CHANGES CAUSED BY WEATHERING EXPOSURE

ORIGINAL PAGE IS OF POOR QUALITY

TABLE 3. SUMMARY OF MATERIAL SUBSTANTIATION TESTS (Continued)

ITEM NO.	DESCRIPTION		NUMBER OF TESTS	TYPE OF TEST	TEST VARIABLES	SPECIMEN CONFIGURATION	PURPOSE OF TEST
	TYPE OF EVALUATION	MATERIAL VARIATIONS					
.3.2	ENVIRONMENTAL – OUTDOOR WEATHERING – LABORATORY. LAMINATE PROPERTIES BEFORE AND AFTER EXPOSURE – STRESSED AND UNSTRESSED	4 MATERIAL SYSTEMS, 2 RESINS: 356 K (180°F) AND 422 K (300°F) SERVICE TEMPERATURE; 2 FABRICS: THIN AND THICK	5120	±45° TENSILE	4 WEATHERING SITES AS ABOVE 4 EXPOSURE TIMES: 0, 1, 3, 5 YEARS; 2 CONDITIONS: STRESSES AND UNSTRESSED; 4 TEST CONDITIONS: 219 K (-65°F), R.T., 356 K OR 422 K (180°F OR 300°F), DRY & WET; 10 REPLICATES	2.54 X 26.7 X 0.20 cm (1.0 X 10.5 X 0.08 IN.)	MATRIX AND RESIN FIBER BOND DEGRADATION
			5120	±45° TENSILE CREEP		2.54 X 26.7 X 0.20 cm (1.0 X 10.5 X 0.08 IN.)	
			5120	0°/±45° COMPRESSION			FIBER, FIBER FINISH, MATRIX DEGRADATION; REPRESENTATIVE APPLICATION LAY-UP
			5120	0°/±45° FATIGUE (R = -1)			
			768	0°/±45° IMPACT	SAME AS ABOVE EXCEPT USE 2 TEST CONDITIONS: 219 K (-65°F) AND R.T.; 3 REPLICATES	50.8 X 50.8 X 0.20 cm (20.0 X 20.0 X 0.08 IN.) PANEL	DEGRADATION OF DELAMINATION RESISTANCE

TABLE 4. SUMMARY OF MATERIAL AND PROCESS VARIABLES TESTS

ITEM NO.	DESCRIPTION: TYPE OF EVALUATION	DESCRIPTION: MATERIAL VARIATIONS	NUMBER OF TESTS	TYPE OF TEST	TEST VARIABLES	SPECIMEN CONFIGURATION	PURPOSE OF TEST
4.1	FIBER/FABRIC BATCH VARIATIONS – LAMINATE PROPERTY EFFECTS	4 MATERIAL SYSTEMS, 2 RESINS: 356 K OR 422 K (180°F OR 300°F) SERVICE TEMPERATURE; 2 FABRICS: THIN AND THICK	180	0° TENSILE	3 FIBER BATCHES; 3 FABRIC BATCHES; 1 TEST CONDITION: R.T. 6 REPLICATES; FIX OTHER VARIABLES	1.27 X 26.7 X 0.10 cm (0.5 X 10.5 X 0.04 IN.)	FIBER STRENGTH AND MODULUS VARIATIONS
			180	0° COMPRESSION		2.54 X 26.7 X 0.20 cm (1.0 X 10.5 X 0.08 IN.)	
	FIBER/FABRIC FINISH BATCH VARIATIONS – LAMINATE PROPERTY EFFECTS		240	±45° TENSILE	3 FIBER FINISH BATCHES; 4 TEST CONDITIONS; 5 REPLICATES; FIX OTHER VARIABLES	2.54 X 26.7 X 0.20 cm (1.0 X 10.5 X 0.08 IN.)	FIBER-RESIN BOND INPLANE OF LAMINATE
			240	0°/±45° INTERLAMINAR CLEAVAGE		2.54 X 30 cm (1.0 X 12.0 IN.) X 4 PLY	INTERLAMINAR FIBER-RESIN BOND
	RESIN/PREPREG BATCH VARIATIONS – LAMINATE PROPERTY EFFECTS		36	CHEMICAL ANALYSIS	3 RESIN/PREPREG BATCHES; 3 REPLICATES	30 YD SAMPLE	COMPOSITION VARIATIONS
			36	RHEOLOGY TESTS (THERMAL ANALYSIS)			VARIATIONS IN FLOW, GEL, ENDOTHERMS, EXOTHERMS, ETC.
			240	±45° TENSILE	3 RESIN/PREPREG BATCHES; 4 TEST CONDITIONS; 5 REPLICATES; FIX OTHER VARIABLES	2.54 X 26.7 X 0.20 cm (1.0 X 10.5 X 0.08 IN.)	MATRIX STRENGTH INPLANE OF LAMINATE
			240	0/±45° INTERLAMINAR CLEAVAGE		2.54 X 30 cm (1.0 X 12.0 IN.) X 4 PLY	MATRIX DELAMINATION RESISTANCE
4.2	STORAGE AND AGING TIME VARIABLES – LAMINATE PROPERTY EFFECTS		432	RHEOLOGY TESTS (THERMAL ANALYSIS)	3 RESIN/PREPREG BATCHES; 4 AGING TIMES @ 0°F; 0, 1, 3, 6, 12 MONTHS; 3 AGING TIMES @ R.T.; 0, 1, 2, 4 WEEKS; 3 REPLICATES; FIX OTHER VARIABLES	27.43 m (30 YD) SAMPLE	VARIATIONS IN FLOW, GEL, EXOTHERMS, ENDOTHERMS, ETC.
			720	±45° TENSILE	SAME AS ABOVE EXCEPT USE 5 REPLICATES	2.54 X 26.7 X 0.20 cm (1.0 X 10.5 X 0.08 IN.)	MATRIX STRENGTH INPLANE OF LAMINATE
			720	0°/±45° INTERLAMINAR CLEAVAGE		2.54 X 30 cm (1.0 X 12.0 IN.) X 4 PLY	MATRIX DELAMINATION RESISTANCE
	LAY-UP – FIBER PATTERN VARIATIONS – LAMINATE PROPERTY EFFECTS		100	0° TENSILE	5 FIBER PATTERN VARIATIONS; 5 REPLICATES; FIX OTHER VARIABLES	1.27 X 26.7 X 0.10 cm (0.5 X 10.5 X 0.04 IN.)	STRENGTH REDUCTION DUE TO FIBER MISALIGNMENT
			100	0° COMPRESSION		2.54 X 26.7 X 0.15 cm (1.0 X 10.5 X 0.06 IN.)	
	CURE PROCESS VARIATIONS – LAMINATE PROPERTY EFFECTS		360	±45° TENSILE	3 RESIN BATCHES; 6 CURE VARIATIONS; 5 REPLICATES; FIX OTHER VARIABLES	2.54 X 26.7 X 0.20 cm (1.0 X 10.5 X 0.08 IN.)	MATRIX STRENGTH INPLANE OF LAMINATE
			360	0°/±45° INTERLAMINAR CLEAVAGE		2.54 X 30 cm (1.0 X 12 IN.) X 4 PLY	MATRIX DELAMINATION RESISTANCE
			216	CHEMICAL ANALYSIS	SAME AS ABOVE EXCEPT USE 3 REPLICATES	2.54 X 30 X 0.20 cm (1.0 X 12 X 0.08 IN.)	POLYMERIZATION STATE

ORIGINAL PAGE IS OF POOR QUALITY

Design Allowable Testing

A test plan covering development of mechanical property values to be used for structural design is presented in Table 5.

A total of 6540 coupon tests are defined, primarily static tests, but including a small number of fatigue tests.

The static strength tests will provide the data for establishing design allowables for the material. Ply-level lamina tests will be used for determination of the material strength and stiffness. Laminate tests, on both notched and unnotched specimens, will be used to verify predicted laminate strength and the notch effects. Pin bearing tests will be conducted to determine laminate bearing strength. In addition, a selected set of spectrum fatigue tests are specified for verification of the design strain level.

TABLE 5. SUMMARY OF DESIGN ALLOWABLE TESTS

ITEM NO.	DESCRIPTION		NUMBER OF SPECIMENS	TYPE OF TEST	TEST VARIABLES	SPECIMEN CONFIGURATION	PURPOSE OF TEST
5.1	DESIGN ALLOWABLES	A. PLY-LEVEL DATA	800	STATIC STRENGTH: 0° TENSION 0° COMPRESSION ± 45° TENSION 90° TENSION 90° COMPRESSION	3 TEST ENVIRONMENTS: 219 K (-65°F), DRY; RTD; AND 355 K (180°F), WET	1.27 X 26.7 cm (0.5 X 10.5 in) X 12PLY 0.64 X 14.0 cm (0.25 X 5.5 in) X 20PLY 2.54 X 26.7 cm (1.0 X 10.5 IN) X 12PLY 2.54 X 26.7 cm (1.0 X 10.5 in) X 12PLY 2.54 X 26.7 cm (1.0 X 10.5 in) X 12PLY	DETERMINATION OF LAMINA MATERIAL STRENGTH
		B. LAMINATE DATA	5000	STATIC STRENGTH: 0° TENSION 0° COMPRESSION 90° TENSION 90° COMPRESSION IN-PLANE SHEAR	4 LAMINATE CONFIGURATIONS, 3 TEST ENVIRONMENTS, NOTCHED & UNNOTCHED	2.54 X 26.7 cm (1.0 X 10.5 in); VARIOUS PLIES 2.54 X 26.7 cm (1.0 X 10.5 in); VARIOUS PLIES 2.54 X 26.7 cm (1.0 X 10.5 in); VARIOUS PLIES 2.54 X 26.7 cm (1.0 X 10.5 in); VARIOUS PLIES 7.62 X 15.2 cm (3 X 6 in); VARIOUS PLIES	VERIFICATION OF PREDICTED LAMINATE STRENGTH; DETERMINATION OF NOTCH EFFECTS
		C. BEARING DATA	720	STATIC PIN BEARING STRENGTH	4 LAMINATE CONFIGURATIONS, 3 TEST ENVIRONMENTS, 2 PIN SIZES	DOUBLE LAP; 8.0 IN. X 5D 3D EDGE DISTANCE, VARIOUS NUMBERS OF PLIES	DETERMINATION OF LAMINATE PIN BEARING STRENGTH
5.2	DESIGN STRAIN LEVEL		20	SPECTRUM FATIGUE, RTD, COMPRESSION-DOMINATED LOADING SPECTRUM, 4 LIFE-TIMES	1 DESIGN STRAIN LEVEL, 2 LAMINATE CONFIGURATIONS, NOTCHED & UNNOTCHED	2.54 X 26.7 cm (1.0 X 10.5 in); VARIOUS NUMBERS OF PLIES	VERIFICATION OF DESIGN STRAIN LEVEL

ORIGINAL PAGE IS OF POOR QUALITY

PART 2 - WING STRUCTURE DEVELOPMENT PROGRAM

Program Summary and Schedule

The schedule for the task-oriented wing structure development program is presented on Figure 16. The program extends over an eight-year period and encompasses four tasks: design data testing, design concepts evaluations, preliminary design, and demonstration article development. These tasks are summarized below and described in detail in the following sections.

Design Data Testing. - Supplementary data on the strength and durability characteristics of T300/5208 graphite/epoxy laminates will be determined over a testing span approximately five years. The majority of the testing will be completed in the first 27 months, with only the moisture tests continuing into 1983.

Design Concepts Evaluation. - The most promising structural approaches for a large, high aspect ratio wing will be identified through analytical design studies and development testing. A 33-month technical effort is planned with go-ahead early in 1979.

Preliminary Design. - The composite wing structure design will be expanded and refined employing the most promising structural concepts and incorporating into the wing design the new, improved material system. The design/manufacturing parameters will be verified; cost-weight trade studies performed; and verification tests conducted on selected subcomponents of the wing structure. The 36-month analytical and development effort is planned to proceed on January 1981.

Demonstration Article Development. - Fabrication of a large wing cover segment, and design, manufacture and testing of a representative wing box structure will be undertaken to demonstrate the feasibility of designing and fabricating a cost-competitive composite wing structure. Technology readiness will be demonstrated by this 30-month program.

ORIGINAL PAGE IS
OF POOR QUALITY

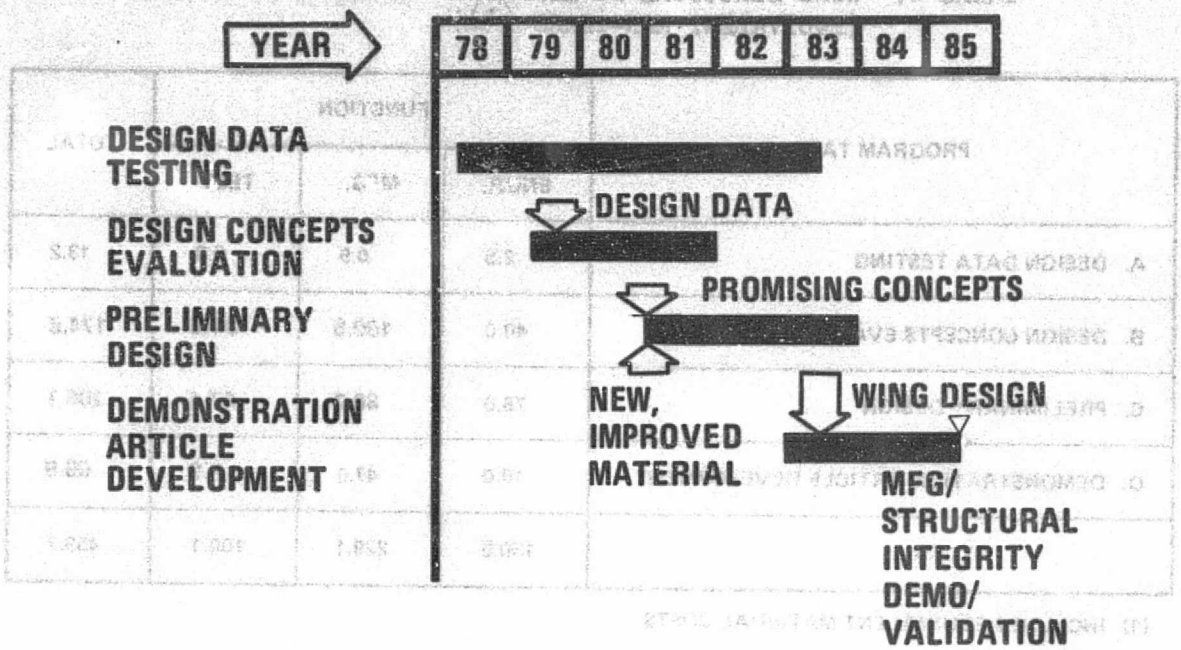

Figure 16. Wing Structure Development Program Schedule

Program Resources

The composite wing structure development program will require a Lockheed effort of approximately 460 man-years of engineering, manufacturing, and testing effort, extending over an eight-year period from 1978 through mid-1985. It would be expected that similar efforts would be required by the other major transport airframe manufacturers.

Table 6 presents the estimated (ROM) wing structure development program costs by program task, and by function (i.e., engineering, manufacturing, and test). Manuafacturing, for purposes of this report, includes tooling and quality assurance as well as the primary manufacturing activities. The estimated costs are presented in equivalent man-years, where these include both direct labor cost and the equivalent labor cost of materials. The development program costs also are summarized graphically on Figure 17.

Table 7 presents an estimated schedule of labor expenditures for the development program. Estimated yearly labor expenditures are indicated for each task. On Figure 18 the labor costs versus program year are presented graphically by function. The estimated man-years for engineering, manufacturing, and testing are presented in Tables, 8, 9, and 10, respectively.

TABLE 6. WING STRUCTURE DEVELOPMENT PROGRAM COST MATRIX (EQUIVALENT MAN-YEARS (1))

PROGRAM TASK	FUNCTION			TOTAL
	ENGR.	MFG.	TEST	
A. DESIGN DATA TESTING	2.5	0.9	9.8	13.2
B. DESIGN CONCEPTS EVALUATION	40.0	100.5	34.0	174.5
C. PRELIMINARY DESIGN	78.0	80.7	47.4	206.1
D. DEMONSTRATION ARTICLE DEVELOPMENT	10.0	47.0	8.9	69.9
TOTAL	130.5	229.1	100.1	459.7

(1) INCLUDES EQUIVALENT MATERIAL COSTS

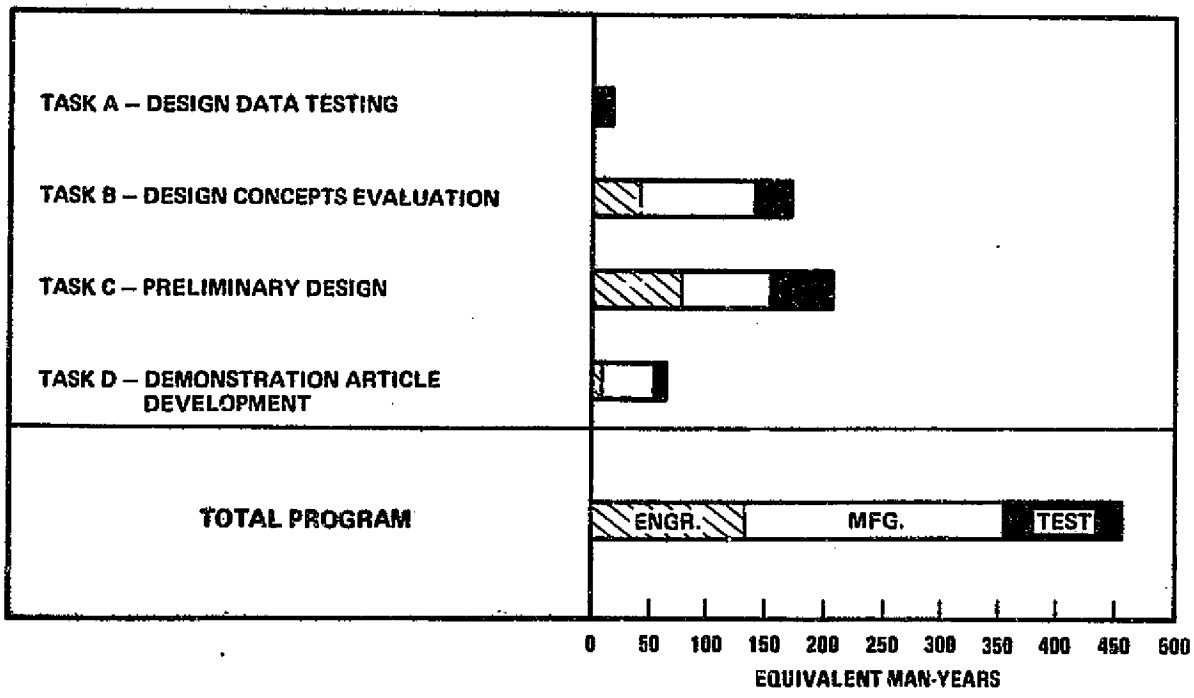

Figure 17. Wing Structure Development Program Cost Summary

TABLE 7. WING STRUCTURE DEVELOPMENT PROGRAM/TASK LABOR SCHEDULE (MAN-YEARS)

PROGRAM TASK	YEAR								TOTAL
	1978	1979	1980	1981	1982	1983	1984	1985	
A. DESIGN DATA TESTING	2.9	6.7	2.5	0.1	0.1	0.1			12.1
B. DESIGN CONCEPTS EVALUATION		25.8	105.1	34.2					165.1
C. PRELIMINARY DESIGN				55.0	113.7	30.3			199.0
D. DEMONSTRATION ARTICLE DEVELOPMENT						42.0	19.2	1.0	62.3
TOTAL	2.9	32.5	107.6	89.3	113.8	72.4	19.3	1.0	438.8

ORIGINAL PAGE IS
OF POOR QUALITY

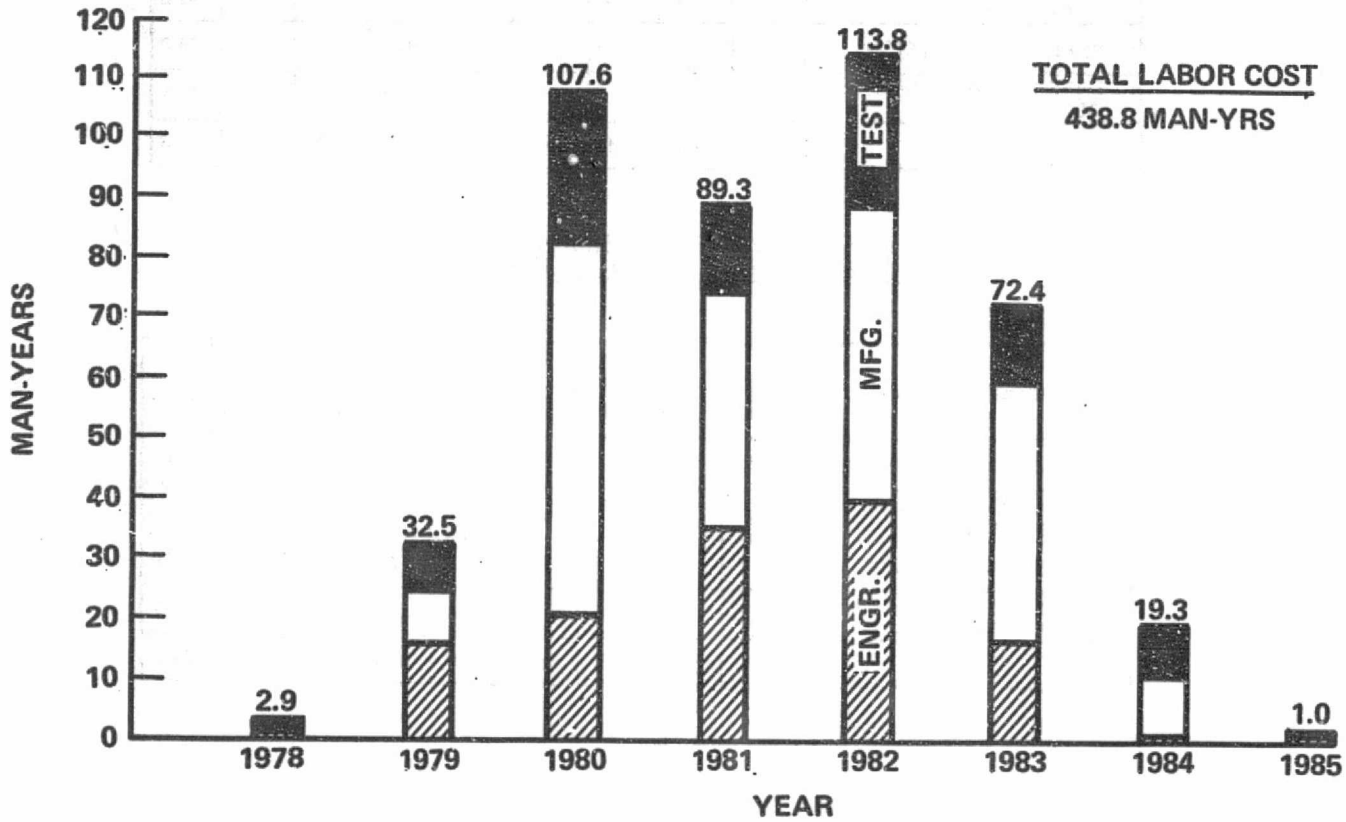

Figure 18. Wing Structure Development Program/
Function Labor Schedule

TABLE 8. WING STRUCTURE DEVELOPMENT PROGRAM ENGINEERING LABOR SCHEDULE (MAN-YEARS)

PROGRAM TASK	YEAR								TOTAL
	1978	1979	1980	1981	1982	1983	1984	1985	
A. DESIGN DATA TESTING	0.7	1.0	0.5	0.1	0.1	0.1			2.5
B. DESIGN CONCEPTS EVALUATION		15.0	20.0	5.0					40.0
C. PRELIMINARY DESIGN				30.0	40.0	8.0			78.0
D. DEMONSTRATION ARTICLE DEVELOPMENT						9.0	0.5	0.5	10.0
TOTAL	0.7	16.0	20.5	35.1	40.1	17.1	0.5	0.5	130.5

TABLE 9. WING STRUCTURE DEVELOPMENT PROGRAM MANUFACTURING LABOR SCHEDULE (MAN-YEARS)

PROGRAM TASK	YEAR								TOTAL
	1978	1979	1980	1981	1982	1983	1984	1985	
A. DESIGN DATA TESTING	0.2	0.7							0.9
B. DESIGN CONCEPTS EVALUATION		8.3	62.6	21.7					92.6
C. PRELIMINARY DESIGN				17.5	48.7	9.8			76.0
D. DEMONSTRATION ARTICLE DEVELOPMENT						33.0	10.8		43.8
TOTAL	0.2	9.0	62.6	39.2	48.7	42.8	10.8		213.3

TABLE 10. WING STRUCTURE DEVELOPMENT PROGRAM TESTING LABOR SCHEDULE (MAN-YEARS)

PROGRAM TASK	YEAR								TOTAL
	1978	1979	1980	1981	1982	1983	1984	1985	
A. DESIGN DATA TESTING	2.0	5.0	2.0						9.0
B. DESIGN CONCEPTS EVALUATION		2.5	22.5	7.5					32.5
C. PRELIMINARY DESIGN				7.5	25.0	12.5			45.0
D. DEMONSTRATION ARTICLE DEVELOPMENT							8.0	0.5	8.5
TOTAL	2.0	7.5	24.5	15.0	25.0	12.5	8.0	0.5	95.0

ORIGINAL PAGE IS
OF POOR QUALITY

DESIGN DATA TESTING

The proposed testing outlined for this task will provide supplementary data to the existing T300/5208 graphite/epoxy data base. It will verify/determine the strength and durability characteristics of the T300/5208 material when subjected to the wing design environment; these data will be used during the subsequent design concepts evaluation task. Included in the initial testing will be the characterization of T300/5208 unidirectional (non crimped) fabric. If the equivalence of this material form to the currently used tape is verified, unidirectional fabric will be used for the remainder of the design data testing and incorporated in the concept development effort.

The design data tests are summarized in Table 11; a total of 840 individual tests are specified. These tests are divided into the following sub-task areas: characterization of the unidirectional fabric; assessment of design strain levels, including the effects of cyclic load and environment, foreign object impact, stacking sequence, and fuel and hydraulic fluid soak; pin bearing tests; and thick laminate moisture absorption/desorption evaluation.

The design data test schedule is presented in Figure 19. The testing spans a period of five years, with the great majority of the testing completed in the first 27 months, and only the moisture tests continuing through 1983.

Fabric Characterization

Static strength tests will be conducted on the unidirectional (non crimped) fabric to characterize the mechanical properties of this material form. One-hundred and fifty (150) tests are defined; including 0° and 90° tension and compression on unidirectional laminates, and 0° tension on a simple $\pm 45^\circ$ laminate. Material property data will be obtained at three test environments: room temperature, dry; 279 K (-65°F), dry; and 356 K (180°F), wet (1% moisture content). These data will determine/verify the material properties for the basic lamina, and provide the basis for the prediction of laminate strength properties.

TABLE 11. SUMMARY OF DESIGN DATA TESTS

ITEM NO.	DESCRIPTION		NUMBER OF SPECIMENS	TYPE OF TEST	TEST VARIABLES	SPECIMEN CONFIGURATION	PURPOSE OF TEST
A2	FABRIC CHARACTERIZATION		150	STATIC STRENGTH: 0° TENSION 0° COMPRESSION ± 45 TENSION 90° TENSION 90° COMPRESSION	3 TEST ENVIRONMENTS: 219 K(−65°F), DRY; RTD; AND 356 K(180°F), WET	1.27 x 26.67cm (0.5 x 10.5 IN.) x 12 PLY 0.64 x 13.97cm (0.25 x 5.5 IN.) x 20 PLY 2.54 x 26.67cm (1 x 10.5 IN.) x 12 PLY 2.54 x 26.67cm (1.0 x 10.5 IN) x 12 PLY 2.54 x 26.67cm (1.0 x 10.5 IN.) x 12 PLY	CHARACTERIZATION OF UNDIRECTIONAL FABRIC STRENGTH
A3	DESIGN STRAIN LEVEL ASSESSMENTS	A. DESIGN STRAIN	240	SPECTRUM FATIGUE, RTD, 4 LIFETIMES	3 DESIGN STRAIN LEVELS, 4 LAMINATE CONFIGURATIONS, NOTCHED & UNNOTCHED, TENSION DOMINATED AND COMPRESSION DOMINATED LOADING SPECTRA	2.54 x 26.67cm (1.0 x 10.5 IN.); VARIOUS NUMBER OF PLIES	DETERMINATION OF DESIGN STRAIN LEVELS
		B. IMPACT EFFECTS	30	IMPACT UNDER LOAD; SPECTRUM FATIGUE, RTD, COMPRESSION DOMINATED LOADING SPECTRUM, 4 LIFETIMES	3 IMPACT CONDITIONS, 2 LAMINATE CONFIGURATIONS	THICK PLATES; SIZE TBD	DETERMINATION OF IMPACT ON DESIGN STRAIN (LIFE)
		C. STACKING SEQUENCE EFFECTS	80	SPECTRUM FATIGUE, 4 LIFETIMES	4 STACKING SEQUENCES, 2 TEST ENVIRONMENTS, TENSION DOMINATED AND COMPRESSION DOMINATED LOADING SPECTRA	2.54 x 26.67cm (1.0 x 10.5 IN.) x 16 PLIES; UNNOTCHED	DETERMINATION OF STACKING SEQUENCE EFFECT ON DESIGN STRAIN (LIFE)
		D. CYCLIC ENVIRONMENT EFFECTS	80	SPECTRUM FATIGUE, WITH CYCLIC TEMPERATURE AND HUMIDITY, 4 LIFETIMES	4 LAMINATE CONFIGURATIONS, NOTCHED & UNNOTCHED, TENSION-DOMINATED AND COMPRESSION DOMINATED LOADING SPECTRA	2.54 x 26.67cm (1.0 x 10.5 IN.); VARIOUS NUMBERS OF PLIES	DETERMINATION OF CYCLIC ENVIRONMENT EFFECT ON DESIGN STRAIN (LIFE)
		E. FUEL AND HYDRAULIC FLUID SOAK EFFECTS					
		(1) SOAK EFFECTS	100	STATIC STRENGTH	3 SOAK CONDITIONS 2 SOAK PERIODS, 2 TEST TEMPERATURES, TENSION AND COMPRESSION	2.54 x 26.67cm (1.0 x 10.5 IN.) x 12 PLIES HOLE NOTCHED	DETERMINATION OF FUEL & HYDRAULIC FLUID SOAK EFFECT ON LAMINATE STRENGTH
		(2) FUEL AND HYDRAULIC FLUID/ CYCLIC ENVIRONMENT EFFECTS	40	SPECTRUM FATIGUE, WITH CYCLIC TEMPERATURE AND HUMIDITY, 4 LIFETIMES	2 SOAK CONDITIONS, 2 SOAK PERIODS, TENSION DOMINATED AND COMPRESSION DOMINATED LOADING SPECTRA	2.54 x 26.67cm (1.0 x 10.5 IN.) x 12 PLIES; HOLE NOTCHED	DETERMINATION OF FUEL & HYDRAULIC FLUID SOAK EFFECT ON DESIGN STRAIN (LIFE)
A4	MECHANICAL FASTENER (PIN BEARING) TESTS		120	STATIC STRENGTH	4 LAMINATE CONFIGURATIONS, 3 TEST ENVIROMENTS, 2 PIN SIZES	DOUBLE LAP; 20.32 cm (8.0 in) x 5D, 3D EDGE DISTANCE	CHARACTERIZATION OF LAMINATE PIN BEARING STRENGTH
A5	THICK LAMINATE MOISTURE ABSORB/ DESORB	A. ACCELERATED CONDITIONING TESTS	12	CONTINUOUS TEMPERATURE AND HUMIDITY EXPOSURE; DISSECTED AND WEIGHED	6 TIME INTERVALS: 1, 2, 3, 4, 5, AND 6 MONTHS	1.27cm (0.50 IN.) THICK PLATE 0.30 x 0.30m (1 x 1 FT)	DETERMINATION OF MOISTURE DISTRIBUTION VS TIME IN THICK LAMINATES SUBJECTED TO ACCELERATED ENVIRONMENTAL EXPOSURE
		B. PRV. CHAMBER TESTS	18	CYCLIC TEMPERATURE AND HUMIDITY EXPOSURE; DISSECTED AND WEIGHED	6 TIME INTERVALS: 6 MONTHS, 1, 2, 3, 4 AND 5 YEARS	1.27cm (0.50 IN.) THICK PLATE 0.30 x 0.30m (1 x 1 FT)	DETERMINATION OF MOISTURE DISTRIBUTION VS TIME IN THICK LAMINATES SUBJECTED TO LONG TERM CYCLIC ENVIRONMENTAL EXPOSURE

ORIGINAL PAGE IS OF POOR QUALITY

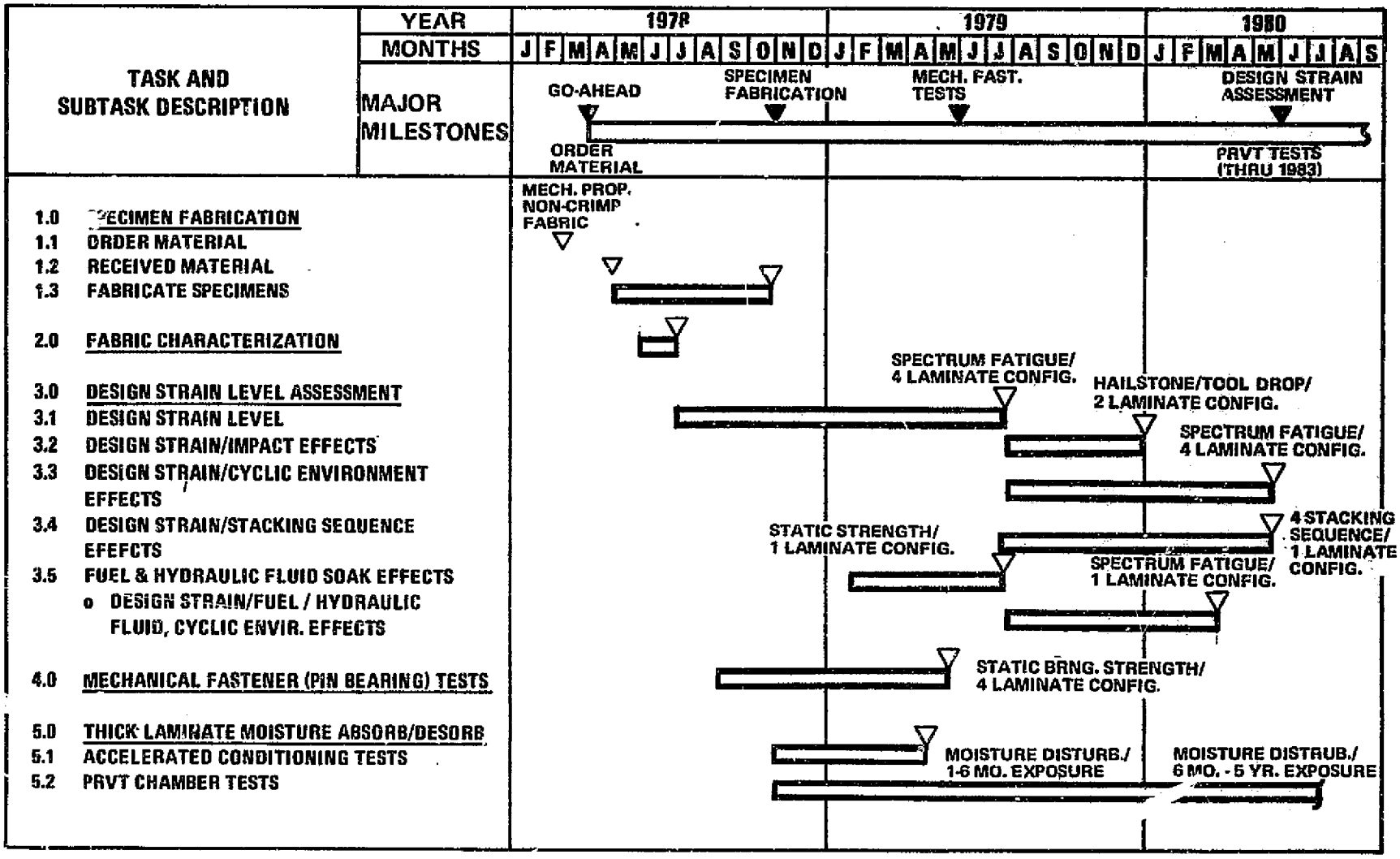

Figure 19. Design Data Testing Schedule

ORIGINAL PAGE IS OF POOR QUALITY

Design Strain Level Assessment

Durability testing will be conducted to develop the data necessary to establish/verify the permissible design strain level for the design of composite wing structure for a commercial transport. These tests will assess the effects of fatigue loading spectra, and various environmental factors, on these design strain levels.

Design Strain. - The design strain level will be established by spectrum fatigue testing four laminate configurations, for both hole notched and unnotched specimens, at three design strain levels. The four laminate configurations will cover the envelope of probable designs, including both fiber-dominated and matrix-dominated laminates. The test specimens will be subjected to one of two flight-by-flight commercial transport wing fatigue loading spectra: a compression-dominated spectrum representing upper surface loadings, and a tension-dominated spectrum representing lower surface loadings. The severity of the loading spectra will be controlled such that the peak strain applied to the specimen will correspond to the specified limit design strain level.

Two-hundred and forty (240) specimens will be tested. The specimens will be tested in a room temperature, dry, as-fabricated condition. The tests (as well as the other design strain level fatigue tests described below) will be continued to failure, or for a maximum of four lifetimes.

Impact Effects. - The effects of foreign object impact on the fatigue life of thick laminates will be assessed by impacting and spectrum fatigue testing composite plate specimens. Both as-fabricated and impacted specimens will be subjected to a flight-by-flight, compression-dominated, upper surface loading spectrum. The associated peak strain level will be based on the results of the design strain level assessment tests. Two impact conditions will be investigated: hailstone impact, and tool drop. The energy levels for these conditions will be representative of the maximums which reasonably can be expected to occur during the lifetime of the aircraft. The specimens will be impacted under load, at levels consistent with the

impact environment. Two laminate configurations, representative of different locations on the upper wing surface, will be tested.

A total of thirty (30) specimens will be tested, in a room temperature, dry, condition.

Cyclic Environment Effects. - The effects of cyclic environment on fatigue life will be assessed by repeating the design strain level assessment tests at one selected design strain and combining a temperature and humidity cycle with the spectrum fatigue loadings. The temperature and humidity environment will be representative of the anticipated operational environment. As before, four laminate configurations, for both unnotched and hole-notched specimens, will be subjected to tension-dominated and compression-dominated flight-by-flight spectrum fatigue loadings. A total of eighty (80) specimens will be tested.

Stacking Sequence Effects. - The effects of stacking sequence on fatigue life will be assessed by testing four stacking sequences for a single, unnotched, 16-ply laminate configuration. Both tension-dominated and compression-dominated spectrum fatigue tests, at one design strain level, will be conducted. Tests will be conducted, both, in the room temperature, dry, and in the cyclic temperature and humidity, wet (1% moisture content) environments. Eighty (80) specimens will be tested for this investigation.

Fuel and Hydraulic Fluid Effects. - The use of composite materials for transport wing structure requires an assessment of the effects of fuel and hydraulic fluid soak on the material strength. This assessment is divided into two aspects, static strength and fatigue strength.

Soak Effects on Static Strength: Static tension and compression tests will be conducted on as-fabricated specimens, and on specimens soaked in fuel or hydraulic fluid for periods of 30 and 60 days. Tests will be conducted at room temperature and 356 K (180°F); on hole-notched specimens using one, matrix-dominated laminate configuration. One-hundred (100) specimens will be tested.

Soak/Cyclic Environment Effects on Fatigue Strength: Spectrum fatigue tests, with cyclic temperature and humidity, will be conducted on soaked specimens to assess the effects of these factors, Again, tests will be conducted on hole-notched specimens soaked in fuel or hydraulic fluid for 30- and 60-day periods. Both tension-dominated and compression-dominated spectrum fatigue tests will be conducted. Specimens which survive four lifetimes of loadings will be residual strength tested for comparison with the static test results. Forty (40) tests will be conducted.

Pin Bearings Tests

Static strength tests will be conducted on double lap shear specimens to determine the laminate bearing strength. Tests will be conducted on four laminate configurations for two pin sizes, 3/16 and 1/4 inch diameter. Three test environments will be included: room temperature, dry; 219 K (-65°F), dry: 356 K (180°F), wet (1% moisture content). These data will provide the basis for development of methods for the prediction of laminate bearing strength. One-hundred and twenty (120) specimens will be tested.

Thick Laminate Moisture Absorption/Desorption Evaluation

The thick laminates associated with the application of composites for wing structure require an evaluation of the rate of moisture absorption/desorption and the resultant moisture distribution in these laminates as a function of time when they are subjected to temperature and humidity. Two types of exposure will be investigated: (1) continuous exposure to temperature and humidity, and (2) cyclic temperature and humidity exposure. The test data will be used to determine the time required in an operational environment to reach an equilibrium condition in thick laminates and to evaluate the use of accelerated laboratory conditioning to simulate the condition in thick laminate testing.

Accelerated Conditioning Tests. - Twelve 1.27 cm (0.5 in) thick laminate specimens will be subjected to continuous exposure to temperature and humidity. Selected specimens will be removed from this environment, after exposure for 1, 2, 3, 4, 5 or 6 months. These specimens will then be dissected in thin slabs parallel to the surface and weighed before and after drying to determine the moisture distribution through the laminate.

PRVT Chamber Tests. - Eighteen 1.27 cm (0.5 in) thick laminate specimens will be placed in the environment chamber being used for the Advanced Composite Vertical Fin (NAS1-14000) PRVT (Production Readiness Verification Tests). These specimens will be used to determine the effects of long-term exposure to cyclic temperature and humidity representative of the operational environment. Selected specimens will be removed at time intervals of 6 months, 1, 2, 3, 4 and 5 years, and the moisture distribution through the thickness determined.

DESIGN CONCEPTS EVALUATION

The principal objectives of the 33-month Design Concepts Evaluation task are: to assess the relative merits of various design approaches for primary wing structures employing significant amounts of composite materials; to select the most promising structural approach for a high aspect ratio wing with an advanced airfoil and active controls; and to provide construction details, weight and cost estimates based on in-depth structural design studies. The effects of the propulsion and control systems on the design of the basic wing box will be considered. In addition, the effect of the key structural/systems interfaces will be identified and accounted for in the wing design.

Achievement of cost goals will require meticulous attention to develop cost-competitive fabrication methods and structural configurations adaptable to these methods which will result in cost-competitive hardware having adequate quality and reproducibility.

Studies are proposed to be performed in accordance with the schedule of Figure 20 and to the depth required to establish firm guidelines and concepts for the

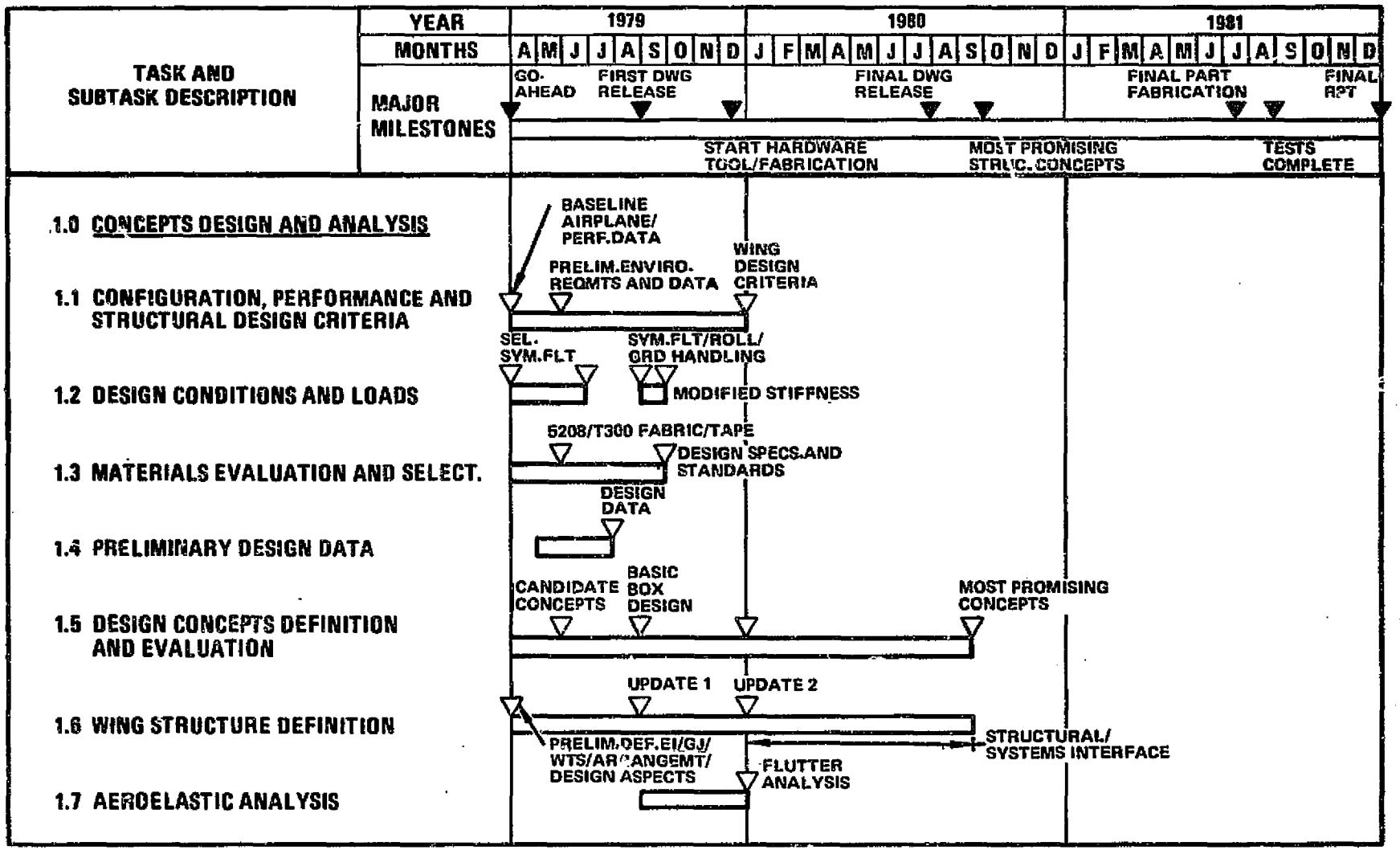

Figure 20. Design Concepts Evaluation Schedule (Sheet 1 of 7)

ORIGINAL PAGE IS OF POOR QUALITY

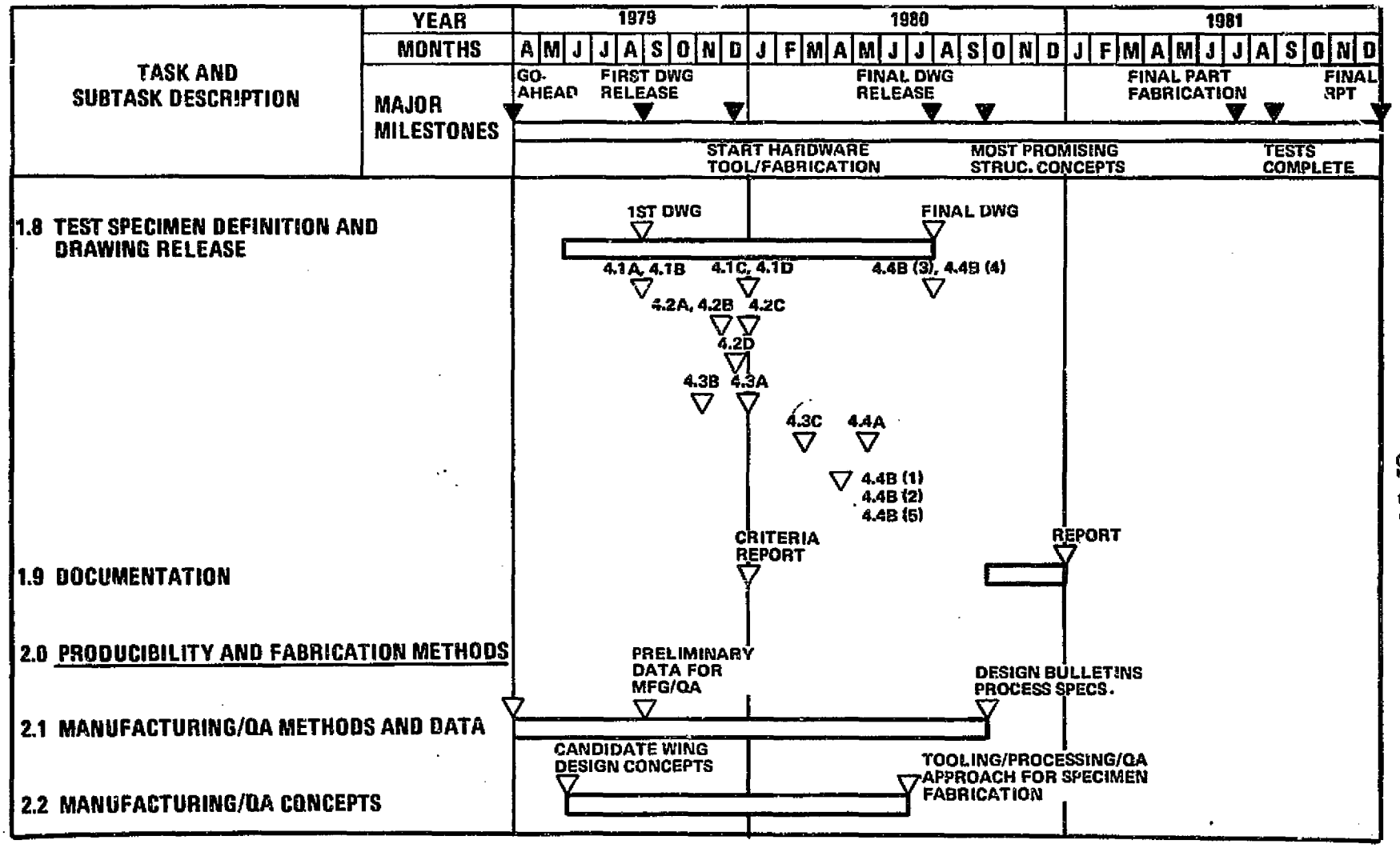

Figure 20. Design Concepts Evaluation Schedule (Sheet 2 of 7)

ORIGINAL PAGE IS OF POOR QUALITY

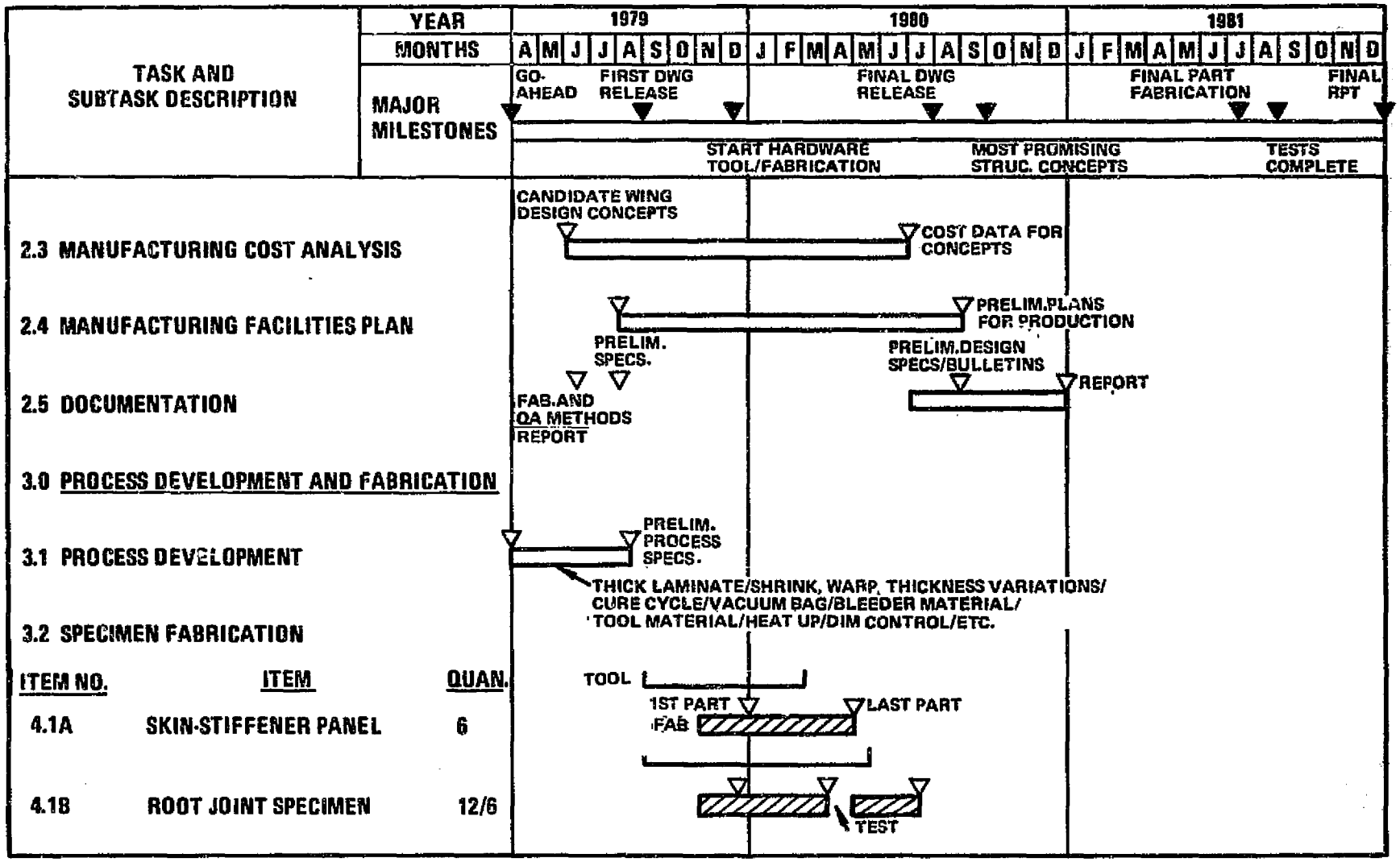

Figure 20. Design Concepts Evaluation Schedule (Sheet 3 of 7)

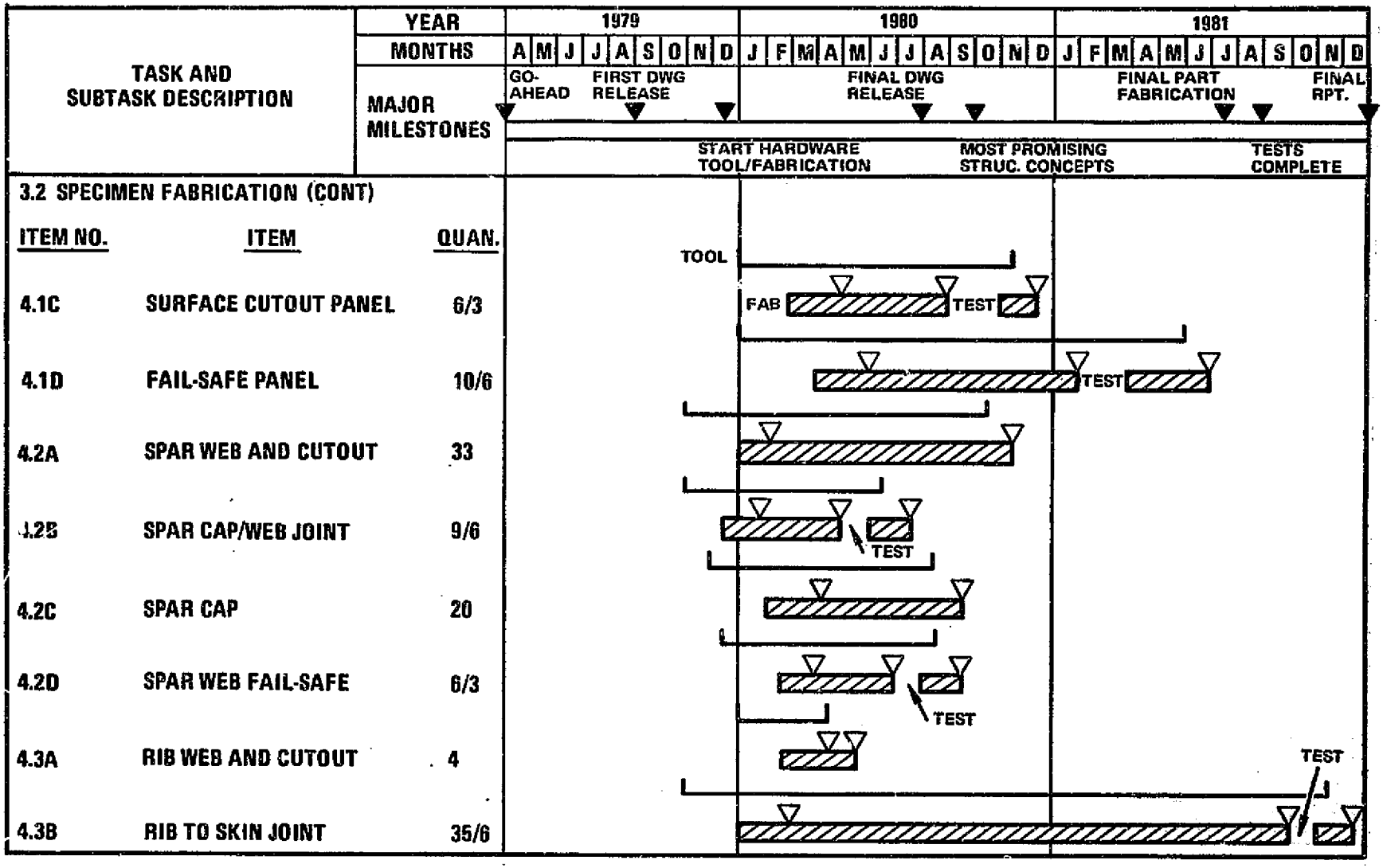

Figure 20. Design Concepts Evaluation Schedule (Sheet 4 of 7)

ORIGINAL PAGE IS OF POOR QUALITY

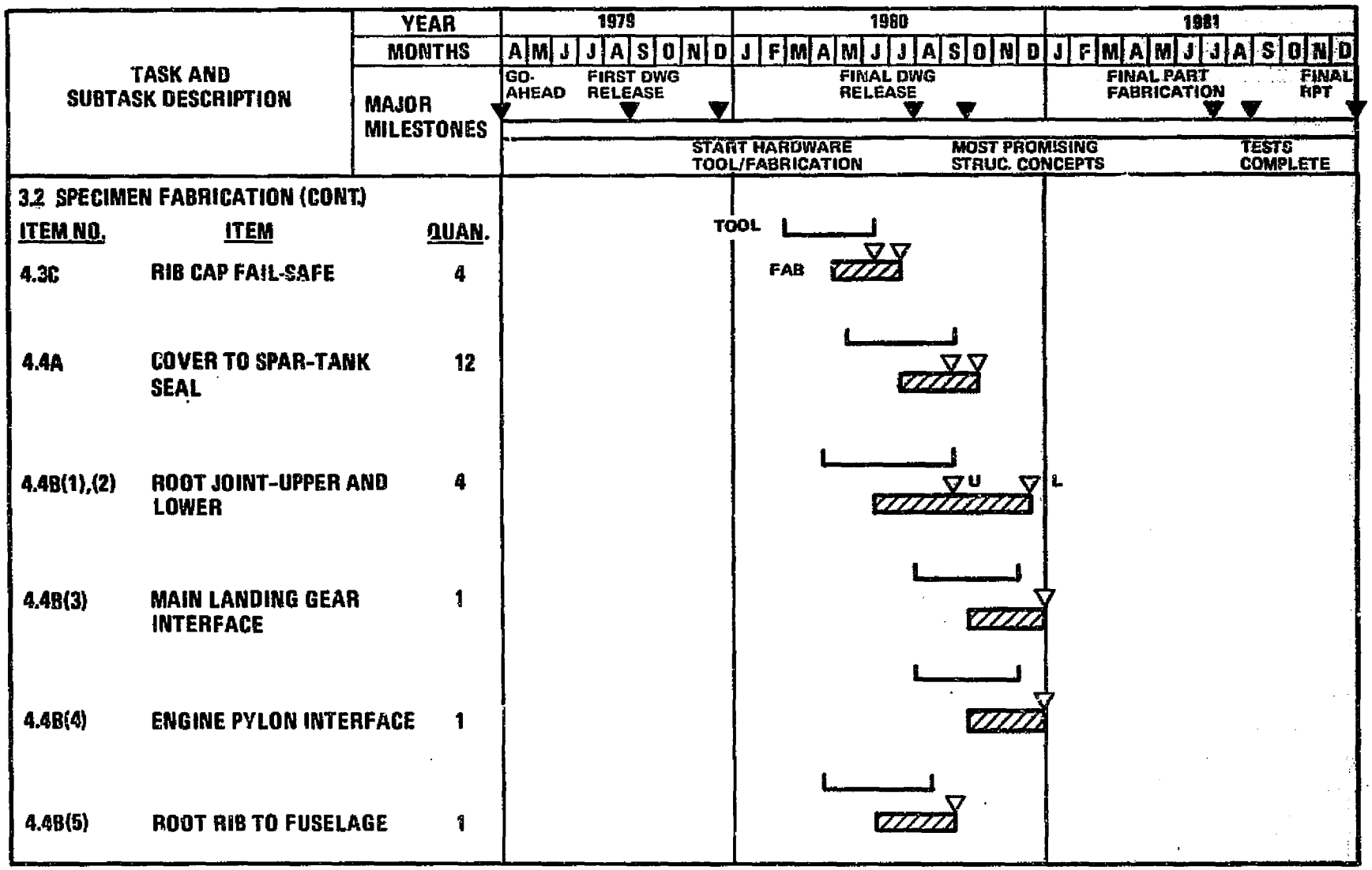

Figure 20. Design Concepts Evaluation Schedule (Sheet 5 of 7)

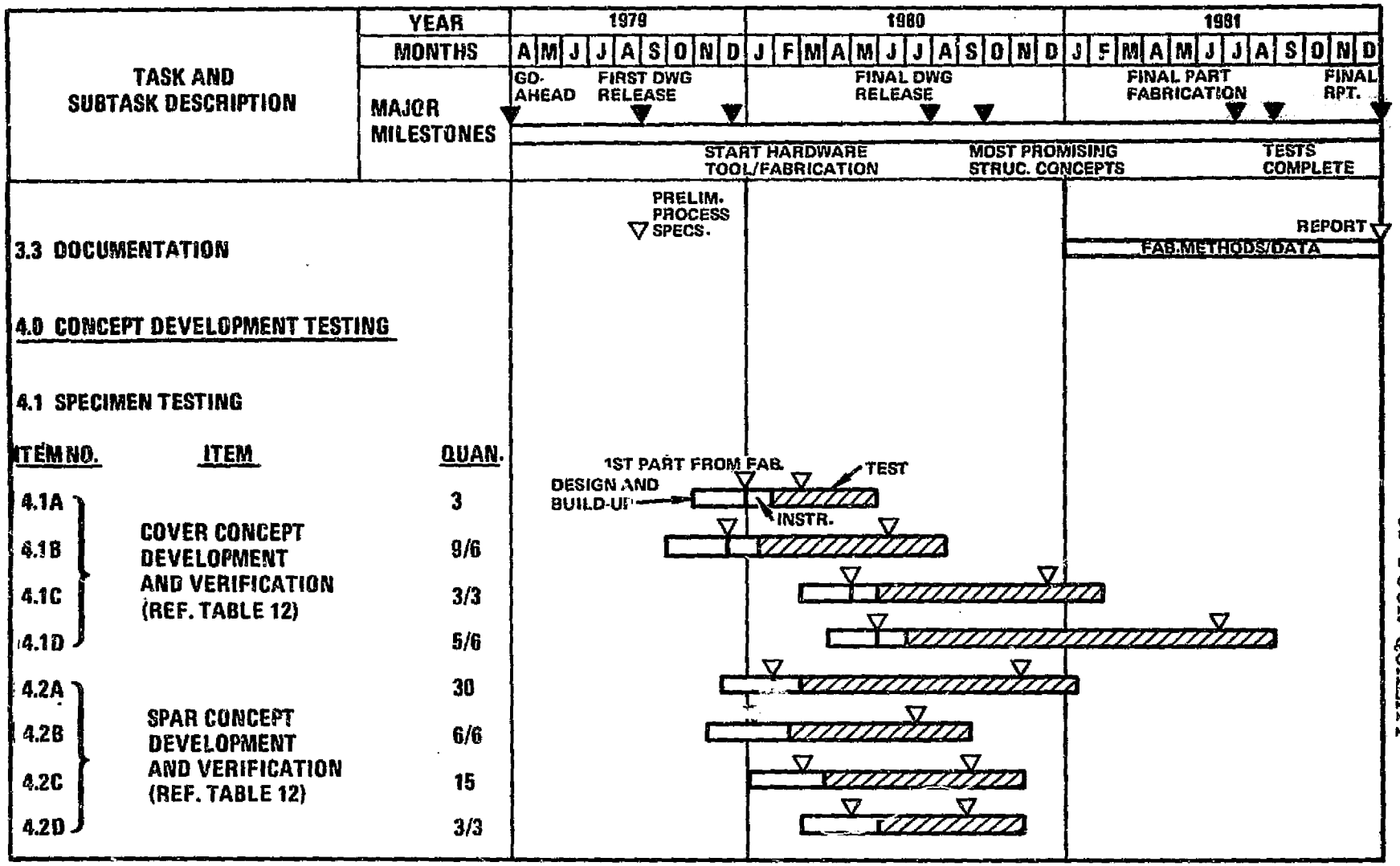

Figure 20. Design Concepts Evaluation Schedule (Sheet 6 of 7)

ORIGINAL PAGE IS OF POOR QUALITY

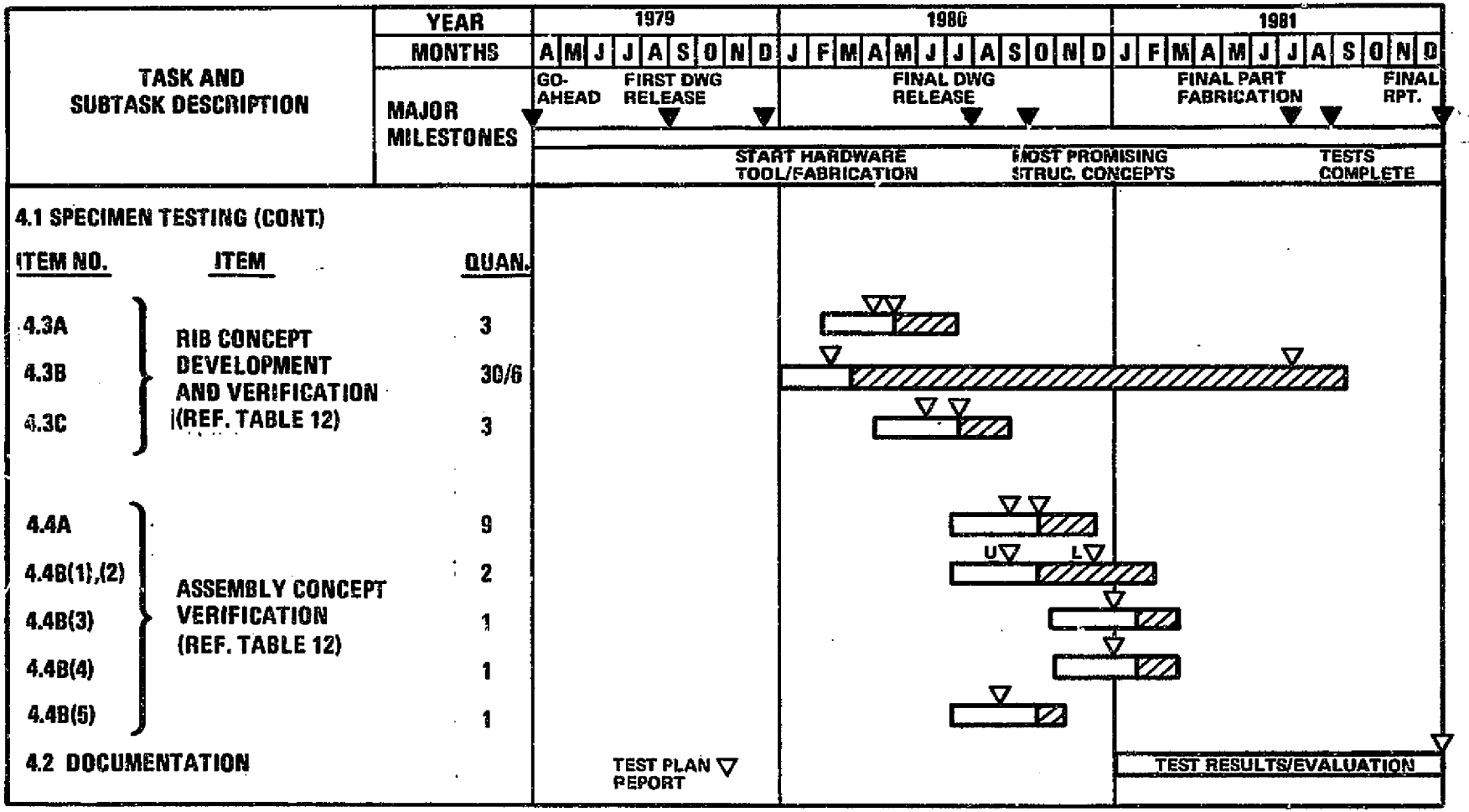

Figure 20. Design Concepts Evaluation Schedule (Sheet 7 of 7)

structural design of an advanced technology subsonic transport wing employing com-composite materials. A description of the various tasks and subtasks of the Design Concepts Evaluation element of the wing structure development program are presented. Both analytical and experimental studies are proposed to provide ingredients for the engineering and manufacturing data bases for composite wing development.

Concepts Design and Analysis

An analytical design study will be conducted to assess the various structural approaches applicable to a high aspect ratio wing employing active controls. The most promising concepts for composite wing primary structure will be identified through design/manufacturing studies of candidate concepts.

Design Criteria. - The baseline airplane and performance data will be selected for a reduced energy transport with transcontinental range capabilities as a minimum. Applicable structural design criteria will be formulated early in the task based on current understanding of requirements and updated as the essential technologies are developed through on-going military and commercial programs.

Design Conditions and Loads. - Aeroelastic loads will be developed for a limited number of symmetric and asymmetric flight conditions and ground conditions. This variety of conditions will provide representative design load envelopes for the wing box along the span of the wing. The loads data will be utilized to size the structure and will be repeated as necessary using the appropriate stiffness data.

Material Evaluation and Selection. - The existing T300/5208 graphite/epoxy data base will be expanded, as appropriate, to reflect the application of unidirectional fabric. The change in reinforcement from tape to noncrimped fabric is proposed to reduce processing labor and cost as described in the Materials Development Program.

Preliminary Design Data. - Fabric characterization results from the Design Data Testing task will be provided to establish preliminary design data for the noncrimped fabric form. Static strength tests will be performed to provide basic lamina data which will be the basis for prediction of laminate strength properties.

Design Concepts Definition and Evaluation. - Investigations, analyses, design studies needed to (1) assess the relative merits of various structural arrangements, concepts, and materials for a high aspect ratio wing of a new transport aircraft, and (2) establish design guidelines to cope with the many interactive design parameters will be performed. The wing box structural arrangement developed in the conceptual design study of Appendix A will be revised to incorporate benefits of the new concepts and changes in configuration, such as beam locations, and rib and stringer spacing and orientation.

Wing Structure Definition. - The preliminary definition of the wing box, including structural arrangement and manufacturing approach will be in accordance with the conceptual design study results (Appendix A). As a starting point, the stiffness characteristics will be representative of a multi-rib wing box employing blade-stiffened wing surface panels. These properties will be updated as refinements are made and new concepts identified.

In assessing the various structural concepts and materials for the major wing components, such factors as ease of fabrication and assembly of components, sealing of fuel tanks, maintenance and servicing, and analytical capability for analysis and design of such components consistent with the requirements of Federal Aviation Regulations - Part 25 (Reference 2) will be considered. The components include the wing surfaces, front and rear beams, ribs, wing production joint, landing gear support structure, engine pylon support structure, and control surface interfaces.

Aeroelastic Analysis. - Aeroelastic loads, control effectiveness and a preliminary flutter analysis will be conducted using the appropriate stiffness data. The effect of laminate orientation on the design requirements will be assessed. All aeroelastic analyses will utilize a simplified stick model to represent the structural characteristics of the wing.

Test Specimen Definition. - Developmental and analytical methods verification tests are essential to establish the most promising structural concepts for application to a cost-competitive composite wing design. A team of engineering and manufacturing/QA specialists will work together to define critical wing surface panel, spar, rib and structural interface designs that should be included in an experimental development program. Appropriate drawing release schedules will be maintained to phase with the necessary manufacturing development and testing to be accomplished.

Producibility and Fabrication Methods

Analytical studies will be performed to establish data/guidelines for producing cost-competitive hardware. Specifically, (1) to develop structural shapes, sheets, and assembly configurations with corresponding fabrication approaches which are directed to facilitate minimum cost (e.g., minimum number of parts and fabrication operations, minimum complexity of tools and procedures, maximum ease at forming); and (2) to advance the state-of-the-art in fabrication methods technology to produce hardware meeting program goals of cost, quality and reproducibility. This requires development to modify, expand/refine existing techniques and/or to develop new methods in the areas of automated layup and preforming, molding methods and tools, machining methods and tools, and fastening and joining techniques.

The approach to producibility and fabrication methods development consists of analytical studies and operational documentation related to design concepts evaluation.

Manufacturing/QA Methods and Data. - A composite manufacturing state-of-the-art survey including material types and forms, fabrication techniques, tooling, facilities, and quality assurance methods will be made. A report will be prepared which includes both Lockheed and industry experience and will emphasize those developments with direct or potential application to the composite wing.

Producibility guidelines for optimizing structural configurations will be established and documented as design bulletins and guidelines. This information will be based on latest material and fabrication technology as determined in the above survey. Based on the latest technology, preliminary process specifications to guide development of detail part and assembly fabrication and quality assurance schemes will be prepared.

Manufacturing Concepts. - As conceptual design studies and preplanning analysis on the composite wing begin to yield preliminary definitions of component detail parts, feasible fabrication plans including alternates will be developed for each configuration concept. These plans will include material types and forms, molding method and tool concepts, and a sequential list of essential fabrication operations such as lay-up, curing, and inspection points. These plans will be in the form of tooling sketches, and draft operation sheets. Alternate plans will be developed for the major components or for portions thereof.

As a result of these conceptual tooling and fabrication studies, recommendations will be made as to which design concepts should be considered candidates for process development fabrication.

An assembly plan considering a preliminary assembly sequence, assembly elapsed times and units in process, preliminary manloading and assembly tool requirements will be developed. These data will be used for facility requirement calculation and cost and schedule development.

Quality Assurance personnel will also interface directly with concept design and preplanning personnel. They will review concept design alternates with respect to inspectability and quality assurance requirements. Particular emphasis will be directed to the development of cost-effective techniques for performing nondestruction inspection (NDI) for inspecting structures with variable thickness and cross sections. New, automated techniques will be dictated by the size of wing components.

Manufacturing Cost Analysis. - Manufacturing costs are greatly influenced by method of layup, method of curing and degree of automation for composite structures. The design is also impacted by cost of manufacture. Cost studies will include:

- Approximated cost analysis of alternate fabrication schemes or plans as a basis for selection of fabrication concepts for each design configuration concept.
- Detail fabrication cost analysis of each candidate structural configuration and corresponding fabrication plan as a basis for function/cost trade-offs studies to select efficient structural configurations and corresponding fabrication methods.

The manufacturing costs of each component alternate fabrication scheme will be established based on available configuration description, tooling sketches and draft operation sheets. These operation sheets will be sequenced to show all manufacturing operations, and time standards applied against each operation. Estimating factors for shop realization, appropriate learning curve and expected scrap rates for composite material fabrication will be developed to represent actual Lockheed and available industry experience with state-of-the-art improvements in tooling, layup and cure, machining and assembly. Manufacturing Control will work in conjunction with Value Engineering in the preparation of these estimates and will coordinate the contacts within Manufacturing, such as Time Standards, Tooling, Planning and Production, as required.

As early in the concept design phase as can be supported by configuration description, the estimated cost of wing production will be developed. These data will be reviewed in an effort to determine the particular components or processes which are not cost competitive. This analysis, in turn, will be reviewed with concept design and preplanning personnel for use in the development of alternate concepts. The production cost targets will be periodically modified through the development program, and will be compared with extrapolations from actual cost experience on subcomponents fabricated in process development and in fabrication of assemblies for test.

Manufacturing Facilities Plan. - Development of facility requirements closely parallels concept studies in design and manufacturing. The establishment of the wing sectional breakdown drawing and the tooling and fabrication sequence concepts for the major wing components will be reviewed by Manufacturing Engineering for machinery and equipment requirements. This analysis will primarily be directed to

the requirements for a production program, but will also consider the machinery and equipment needs for components to be manufactured in the process development and manufacturing verification tasks, and the components to be manufactured for engineering test programs.

Preliminary plans for wing manufacturing facitilies will be made near the end of the Design Concepts Evaluation task. The facility requirements for the balance of the development program will also be reviewed at that time. The production facility plan will be subsequently updated in concert with each revision to the manufacturing cost analysis, particularly at the end of the preliminary design phase. As the development program progresses through the demonstration article manufacture, production facility specifications will be prepared and bids obtained prior to final presentation of data to management for a decision on wing production go-ahead.

Process Development and Fabrication

A manufacturing base for fabrication of wing structural components will be experimentally established. This base will be defined by basic process specifications, tool drawings, detail manufacturing, quality assurance procedures and other required standards/controls to establish the most efficient fabrication methods for the test specimens.

Process Development. - The development of fabrication and process techniques which would apply to particular elements of the design concepts will be made. These specimens will be representative of design concepts under consideration and will be evaluated by visual examination, dissection or dimensional checks, and are not intended to satisfy particular engineering structural test requirements. In some cases, however, development articles may be of the same configuration as will be required for testing. Quality Assurance will utilize experimental parts in NDI development activity and may, in addition, define certain panels or spar cap segments to be manufactured with known defects expressly for NDI development. Some of the areas to be investigated include:

Thick Laminate Behavior: Thick laminates present special problems in layup and cure. Some kind of debulking scheme or partial curing of incremental laminates must be developed to obtain a satisfactory degree of compaction after layup, and before final cure. To the greatest extent possible, air must be removed from the layup before the final cure to avoid entrapping it in the cured laminate. Thick laminates, such as would be found in the wing root area, will generate exothermic reactions (in some types of epoxy resins) in which heat created within the laminate along with the heat applied during cure could create excessive temperatures and damage the laminate. Development of cure cycles to control heating rates or to incorporate partial curing of incremental laminates will be undertaken if required. Sufficient testing and analysis will be accomplished to verify that resin content of the laminate is uniformly within acceptable limits.

Cure Cycle Development: Cure cycle development will commence with the studies of candidate resin systems by Materials Engineering. The characteristics of the cure cycles required by these candidates will be screened to ensure that the system or systems finally selected can be used in a production environment. Final candidate systems will be subjected to manufacturing tests which will approximate, to the extent possible, the final component. Objectives will be to achieve cure cycles which will result in: (1) minimum processing time, (2) maximum tolerances on temperatures and times required for all production conditions, and (3) finished parts of required quality.

Adaptability to Automated Layup: In order for the composite wing to be cost competitive with an equivalent metal wing, the design must permit automated layup to a very great extent. Design of the wing skins will be reviewed by Manufacturing with the object of maximizing the amount of broadgoods that can be laid down on the tool by an automated dispensing machine. Recommendations will be made regarding filler plies, doubler plies and short plies which reduce the efficiency of the machine. Similarly, designs for rib caps, rib webs, spars, blade stiffeners (and possibly hat-stiffeners as an alternative) will be made from broadgoods laid-up by the dispensing machine or by some special machine if economically feasible.

Shrink, Warp, Thickness Variation: The extremely large size of a one-piece wing skin and the very long-lengths being considered for the spars magnify the usual problems encountered in producing cured laminates which must meet exacting engineering requirements. Dimensional changes which occur both as a result of the temperature excursions during the cure cycle and as a result of the polymerization of the resin are of concern because of stresses which may be incorporated within the laminate. How these dimensional changes interact with the changes in tooling as the molds expand and contract is also of concern. At worst, parts may crack, warp, and shrink beyond acceptable limits. Manufacturing will evaluate designs, tooling and cure cycles as a single system so that difficulties can be uncovered and resolved before concepts are fixed. For very thick laminate sections, small and apparently acceptable variations in individual ply thickness can accumulate to the point where the fit and function are impeded. Limits of acceptable variation will be determined and tests will be performed to see if these limits can be met. A review of industry experience on curing of thick laminates will be made.

Tooling Materials and Designs: It is anticipated that selection of tooling materials will be made from the conventional list of steel and aluminum alloys and high temperature tooling plastics. The Lockheed-California Company has investigated graphite laminate tools and graphite tools machined from solid block. Graphite tools offer the advantage of matching the thermal coefficient of expansion of the graphite laminate to be cured, but have poor heat transfer characteristics. In general, steel is attractive because of its low thermal expansion, and is less costly and structurally superior to aluminum. Aluminum will be used for tools which require a large amount of material removal. Plastic is a useful material where tools with difficult contours must be made. Since plastic can be cast or molded to shape, expensive machining of metal is avoided. However, plastic has poor thermal transfer, poor load bearing properties and has limited service life when subjected to thermal cycling. Tooling material selection will be made on the basis of the above considerations and representative tools will be built and tested to verify the selection.

Integral Heat/Pressure Tooling: Limitation of facilities to process a large number of parts of significant size will require an analysis to determine the

feasibility of integral heat/pressure tooling. As differentiated from autoclave processing, these types of tools provide built-in sources of heat and pressure. Cost is not the only consideration here since very large parts of varying thickness may require zone heating; that is, different portions of the tool require different heat inputs. Integrally heated tools provide a convenient method to accomplish this. However the cost of tooling is very high, even considering the facility cost tradeoff, and requires high volume production quantities to ammortize their cost.

Match Molds and Press Forming: Part configurations such as rib caps and webs lend themselves to molding in a matched mold. Matched molds give good dimensional control but must be properly designed to include features such as use of elastomeric plugs or padded mold faces to ensure proper pressure distribution by compensating for laminate thickness variations. With proper processing, this type of tool yields an excellent laminate. Prototype tools will be built to evaluate match mold curing for selected shapes. In general, these molds will be used with a heated platen hydraulic press to provide the heat and pressure required. Integrally heated tools may also be used in a press. Shapes incorporating very little draft pose pressure application problems with matched molds.

Bag and Bleeder Materials: Lockheed's experience in developing cure techniques for composite laminates will be the point of departure in selecting candidate materials and techniques for bagging and bleeding the laminates. For bags, tests will be run with both plastic and rubber. A wide choice of bleeder materials is available and after some initial screening, test will be run to determine which are suitable for specific wing application. Preformed, reusable silicone rubber bags will be investigated to reduce costs or improve quality.

Machining Drilling: Through current government and industry programs successful techniques for machining and drilling of composites will have been developed and engineering process specifications formulated. Process development tests will be required to extend these techniques to thick laminates. Development of holding fixtures, and locating devices will be required. It is anticipated that such factors as drill geometry, feeds, speeds and abrasive sawing techniques will be readily adaptable to the wing components.

Quality Assurance Process Development: Quality Assurance tasks in the process development phase will consist of support to Manufacturing and Engineering in their development work, and will also include specific Quality Assurance process development as discussed below.

Non-Destructive Inspection (NDI) Development: The NDI development program will consist of assessing the capability of available equipment and determining the needs for development of new equipment and methods as follows:

- Available Equipment Capabilities:
  - Manufacture representative wing specimen coupons with flaws
  - Test coupons by various NDI methods
  - Determine correlation with mechanical tests and photomicrographic examination
  - Document NDI methods
  - Establish accuracy, limits, etc. and determine adequacy of capabilities for critical wing structure application.
- New Equipment:
  - Continue to monitor developments in real-time acquisition and control (e.g. mini-computer/micro processor analysis of ultrasonic data).
  - Contact test equipment suppliers, material suppliers and other aerospace companies
  - Conduct literature search
  - Determine applicability of new equipment and methods to critical wing components.

Specimen Tooling and Fabrication. - Concept development specimens, as defined in the test matrices, will be fabricated using the processes developed during the manufacturing process development phase of the program. Tooling will be development-type tooling, but will havw surface quality and dimensional accuracy of production composite tooling. Based on various process development activities, preliminary process specifications will be prepared. Concept development specimens will be made to these specifications, which are changed as required by development shop experience and/or Engineering test feedback.

In addition to the process specifications, production design outlines which describe the detail manufacturing and tooling plan for the specimen will also be

prepared. The tooling used for these specimens will consist of, to the greatest degree possible, tooling which was used during process development activities. Planning will prepare operating sheets which will provide the shop with a detailed record of the processing of the part. All concept development specimens will be fabricated in suitable facilities using personnel experienced in composite layup. Prior to release of the specimens to Engineering for test, physical, mechanical and ultrasonic tests will be used to confirm acceptability.

Concept Development Testing

The concept development tests required for the design concepts evaluation task are summarized in Table 12. One-hundred and fifty-four (154) structural element and sub-component tests are defined, covering structural concepts for the wing covers, the spars and the ribs, and for significant assemblies.

Both static strength and fatigue tests are specified for the concept development and verification effort. All fatigue testing will be conducted using appropriate flight-by-flight transport wing loading spectra. When fail-safe concepts are being evaluated, a combination of fatigue and static testing is specified. All of these development tests will be conducted in a room temperature, dry, environment.

The concept development testing schedule is presented as subtask 4.0 in Figure 20. The test effort spans a period of two years, extending through October, 1981.

Covers. - Thirty-five (35) cover concept development tests are specified. These include testing of cover stiffener concepts, surface joint concepts, upper surface inboard manhole reinforcing concepts, and cover fail-safe concepts. The stiffener concept tests include the effect of impact.

Spars. - Sixty-three (63) spar concept development tests are specified, including tests of spar web and cutout concepts, spar cap joint concepts, and spar web fail-safe concepts, and spar cap crippling strength tests.

TABLE 12. SUMMARY OF CONCEPT DEVELOPMENT TESTS

ITEM NO.	DESCRIPTION		NUMBER OF SPECIMENS	TYPE OF TEST	TEST VARIABLES	SPECIMEN CONFIGURATION	PURPOSE OF TEST
4.1	COVERS	A. STIFFENER CONCEPTS	3	IMPACT UNDER LOAD (OPERATING STRAIN LEVEL), 2 LOCATIONS; STATIC COMPRESSION TO FAILURE	3 STIFFENER CONFIGURATIONS	0.91 x 1.52m (3 x 5 FT) STIFFENED PANEL, WITH 3 STIFFENERS	STIFFENER CONCEPT VERIFICATION; COMPRESSIVE STRENGTH
		B. JOINT CONCEPTS					
		(1)	9	STATIC TENSION TO FAILURE	3 JOINT CONCEPTS	0.91 x 0.30m (3 x 1 FT) WITH 1 STIFFENER	JOINT CONCEPT DEVELOPMENT; STATIC STRENGTH
		(2)	6	SPECTRUM FATIGUE, TENSION DOMINATED LOADING SPECTRUM, 2 LIFETIMES	2 (BEST) JOINT CONCEPTS	0.91 x 0.30m (3 x 1 FT) WITH 1 STIFFENER	JOINT CONCEPT VERIFICATION; FATIGUE STRENGTH
		C. UPPER SURFACE INBOARD MANHOLE REINFORCING CONCEPTS					
		(1)	3	STATIC COMPRESSION TO FAILURE	3 MANHOLE REINFORCEMENT CONCEPTS	1.83 x 1.22m (6 x 4 FT) STIFFENED PANEL, WITH MANHOLE	MANHOLE REINFORCEMENT CONCEPT DEVELOPMENT; STATIC STRENGTH
		(2)	3	SPECTRUM FATIGUE, COMPRESSION DOMINATED LOADING SPECTRUM, 2 LIFETIMES	1 (BEST) MANHOLE REINFORCEMENT CONCEPT	1.83 x 1.22m (6 x 4 FT) STIFFENED PANEL, WITH MANHOLE	MANHOLE REINFORCEMENT CONCEPT VERIFICATION; FATIGUE STRENGTH
		D. COVER FAIL-SAFE CONCEPTS					
		(1)	5	STATIC TENSION TO LIMIT LOAD; SPECTRUM FATIGUE, TENSION DOMINATED, 1/2 LIFETIME; STATIC TENSION TO FAILURE	5 FAIL-SAFE CONCEPTS	1.83 x 1.22m (6 x 4 FT) STIFFENED PANEL, WITH 5 STIFFENERS AND IMPOSED DAMAGE	COVER FAIL-SAFE CONCEPT DEVELOPMENT
		(2)	6	SPECTRUM FATIGUE, 1/2 LIFETIME; STATIC TENSION OR COMPRESSION TO FAILURE	2 (BEST) FAIL-SAFE CONCEPTS (UPPER & LOWER SURFACE) TENSION-DOMINATED AND COMPRESSION-DOMINATED LOADING SPECTRA	1.83 x 1.22m (6 x 4 FT) STIFFENED PANEL, WITH 5 STIFFENERS AND IMPOSED DAMAGE	COVER FAIL-SAFE CONCEPT VERIFICATION
4.2	SPARS	A. WEB & CUTOUT CONCEPTS					
		(1)	12	STATIC SHEAR TO FAILURE	3 WEB CONCEPTS; WITH AND WITHOUT CUTOUT	0.91 x 0.91m (3 x 3 FT) PANEL	SPAR WEB & CUTOUT CONCEPT DEVELOPMENT; STATIC STRENGTH
		(2)	18	SPECTRUM FATIGUE, SHEAR, 2 LIFETIMES	3 WEB CONCEPTS; WITH AND WITHOUT CUTOUT	0.91 x 0.91m (3 x 3 FT) PANEL	SPAR WEB & CUTOUT CONCEPT DEVELOPMENT; FATIGUE STRENGTH
		B. CAP JOINT CONCEPTS					
		(1)	6	STATIC TENSION OR COMPRESSION TO FAILURE	3 JOINT CONCEPTS; TENSION AND COMPRESSION LOADS	1.22m (4 FT) LONG	SPAR CAP JOINT CONCEPT DEVELOPMENT; STATIC STRENGTH
		(2)	6	SPECTRUM FATIGUE, 2 LIFETIMES	2 (BEST) JONT CONCEPTS (UPPER & LOWER SURFACE); TENSION-DOMINATED AND COMPRESSION DOMINATED LOADING SPECTRA	1.22m (4 FT) LONG	SPAR CAP JOINT CONCEPT VERIFICATION; FATIGUE STRENGTH
		C. CAP CRIPPLING	16	STATIC COMPRESSION TO FAILURE	8 CAP CONFIGURATIONS	0.30m (1 FT) LONG	DETERMINATION OF CAP CRIPPLING STRENGTH

ORIGINAL PAGE IS OF POOR QUALITY

TABLE 12. SUMMARY OF CONCLPT DEVELOPMENT TESTS (Continued)

ITEM NO.	DESCRIPTION		NUMBER OF SPECIMENS	TYPE OF TEST	TEST VARIABLES	SPECIMEN CONFIGURATION	PURPOSE OF TEST
		D. WEB FAIL-SAFE CONCEPTS					
		(1)	3	STATIC SHEAR TO LIMIT LOAD; SPECTRUM FATIGUE, SHEAR, 1/2 LIFETIME; STATIC SHEAR TO FAILURE	3 FAIL-SAFE CONCEPTS	1.83m (6 FT) BEAM	SPAR WEB FAIL-SAFE CONCEPT DEVELOPMENT
		(2)	3	SPECTRUM FATIGUE, 1/2 LIFETIME; STATIC SHEAR TO FAILURE	1 (BEST) FAIL-SAFE CONCEPT	1.83m (6 FT) BEAM	SPAR WEB FAIL-SAFE CONCEPT VERIFICATION
4.3	RIBS	A. WEB & CUTOUT CONCEPTS	3	SPECTRUM FATIGUE, SHEAR, 2 LIFETIMES	1 WEB CONCEPT	0.91 x 0.91m (3 x 3 FT) PANEL, WITH CUTOUT	RIB WEB & CUTOUT CONCEPT VERIFICATION
		B. RIB-TO-SKIN ATTACHMENT CONCEPTS					
		(1)	30	STATIC SHEAR TO FAILURE, OR STATIC TENSION PULL-OFF TO FAILURE, OR STATIC SHEAR & TENSION PULL-OFF TO FAILURE	5 ATTACHMENT CONCEPTS; SHEAR, TENSION PULL-OFF AND COMBINED SHEAR AND TENSION PULL-OFF	0.91m (3 FT) LONG	RIB-TO-SKIN ATTACHMENT CONCEPT DEVELOPMENT; STATIC STRENGTH
		(2)	6	SPECTRUM FATIGUE, COMBINED SHEAR AND TENSION PULL-OFF, 2 LIFETIMES	2 (BEST) ATTACHMENT CONCEPTS	0.91m (3 FT) LONG	RIB-TO-SKIN ATTACHMENT VERIFICATION; FATIGUE STRENGTH
		C. WEB FAIL-SAFE CONCEPT	3	STATIC SHEAR TO LIMIT LOAD; SPECTRUM FATIGUE, SHEAR, 1/2 LIFETIME; STATIC SHEAR TO FAILURE	1 FAIL-SAFE CONCEPT	1.83m (6 FT) BEAM	RIB WEB FAIL-SAFE CONCEPT VERIFICATION
4.4	ASSEMBLY	A. COVER-TO-SPAR TANK SEAL	0	SPECTRUM FATIGUE, BEAM BENDING, 1/2 LIFETIME; STATIC BENDING TO FAILURE	3 TANK SEAL CONCEPTS	1.83m (6 FT) BEAM, WITH EFFECTIVE SKIN UPPER & LOWER SURFACE	TANK SEAL CONCEPT DEVELOPMENT
		B. MAJOR INTERFACES					
		(1) WING ROOT JOINT, UPPER SURFACE CONCEPT	1	SPECTRUM FATIGUE, COMPRESSION DOMINATED, 2 LIFETIMES	1 JOINT CONCEPT	TBD	UPPER SURFACE WING ROOT JOINT CONCEPT VERIFICATION
		(2) WING ROOT JOINT, LOWER SURFACE CONCEPT	1	SPECTRUM FATIGUE, TENSION DOMINATED, 2 LIFETIMES	1 JOINT CONCEPT	TBD	LOWER SURFACE ING ROOT JOINT CONCEPT VERIFICATION
		(3) MAIN LANDING GEAR ATTACHMENT CONCEPT	1	STATIC STRENGTH	1 ATTACHMENT CONCEPT	TBD	MAIN LANDING GEAR ATTACHMENT CONCEPT VERIFICATION
		(4) ENGINE PYLON ATTACHMENT CONCEPT	1	STATIC STRENGTH	1 ATTACHMENT CONCEPT	TBD	ENGINE PYLON ATTACHMENT CONCEPT VERIFICATION
		(5) WING ROOT RIB-TO-FUSELAGE INTERFACE CONCEPT	1	STATIC STRENGTH	1 INTERFACE CONCEPT	TBD	WING ROOT RIB-TO-FUSELAGE CONCEPT VERIFICATION

ORIGINAL PAGE IS OF POOR QUALITY

Ribs. - Forty-two (42) rib concept tests are specified. These include development of rib web and cutout concepts, rib-to-skin attachment concepts, and rib web fail-safe concepts.

Assemblies. - Fourteen (14) tests of assembly concepts are specified. These include cover-to-spar tank seal concepts, and concepts for the five major structural interfaces in the wing - the upper and lower surface wing root joint, the main landing gear attachment, the engine pylon attachemnt, and the wing root rib-to-fuselage interface.

PRELIMINARY DESIGN

The objectives of the proposed Preliminary Design task are: to expand and refine the most promising structural concepts for primary wing structures (identified in Design Concepts Evaluation); to incorporate into the wing design the new material system; to verify the design/manufacturing parameters; to identify and design test specimens for design verification tests; to update the structural arrangement, construction details and structural weight estimates; to conduct cost-weight trade studies; to conduct static, spectrum fatigue, impact, fail-safe, and residual strength tests to verify sub-components of selected wing structure; and, to further explore and validate approaches for major structural and system interface designs, including lightning strike protection and fuel containment. The proposed schedule for the 36-month design-manufacturing study is presented in Figure 21. The subtasks which are delineated in the following discussion are scoped to provide, at the completion of this task, the necessary data base for composite wing commitment. The demonstration and validation of technology readiness are proposed to be performed in the subsequent task.

Wing Design and Analysis

The preliminary design of an advanced commercial transport wing structure will be conducted to validate the benefits or advantages of promising concepts

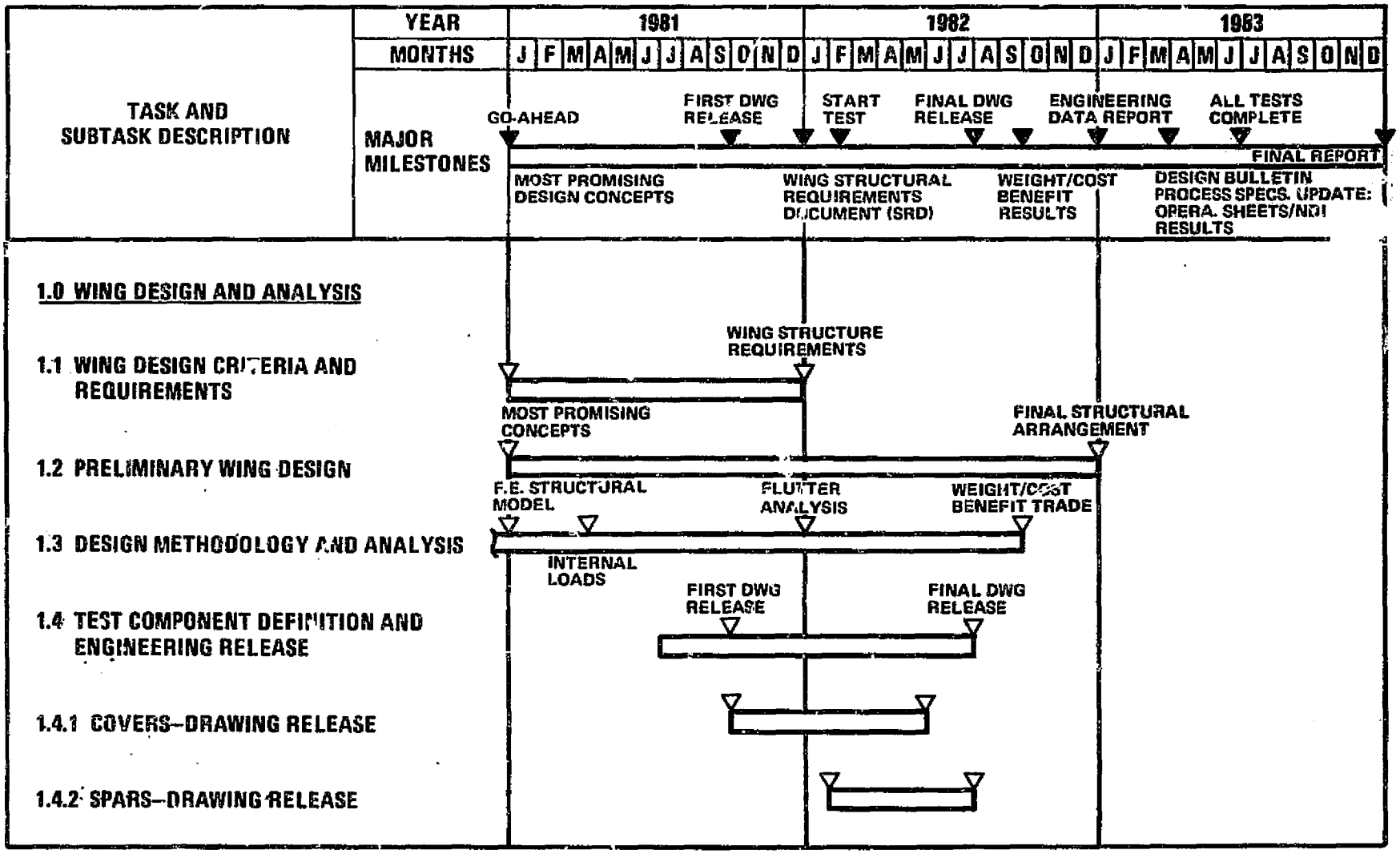

Figure 21. Preliminary Design Schedule (Sheet 1 of 12)

ORIGINAL PAGE IS OF POOR QUALITY

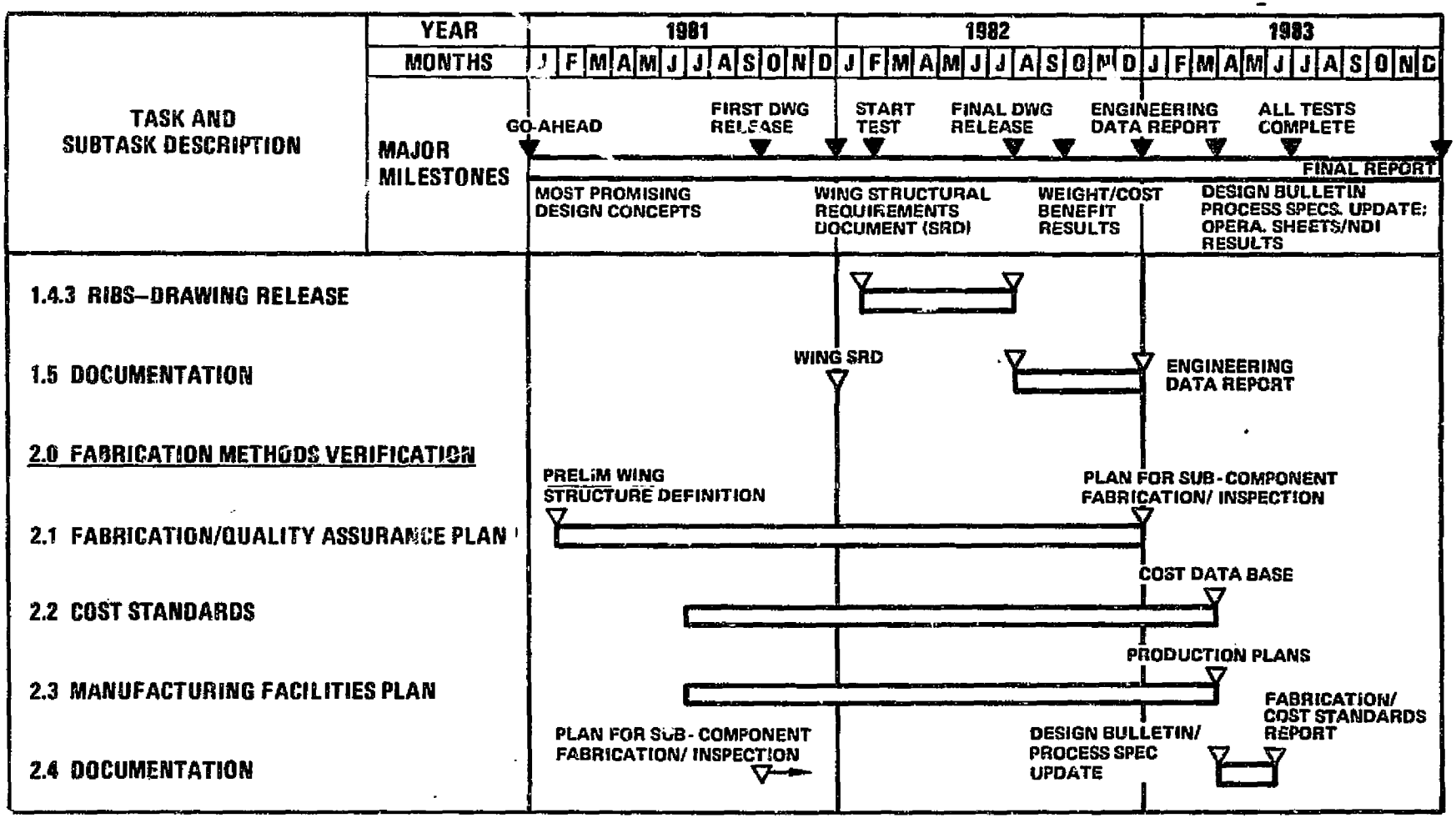

Figure 21. Preliminary Design Schedule (Sheet 2 of 12)

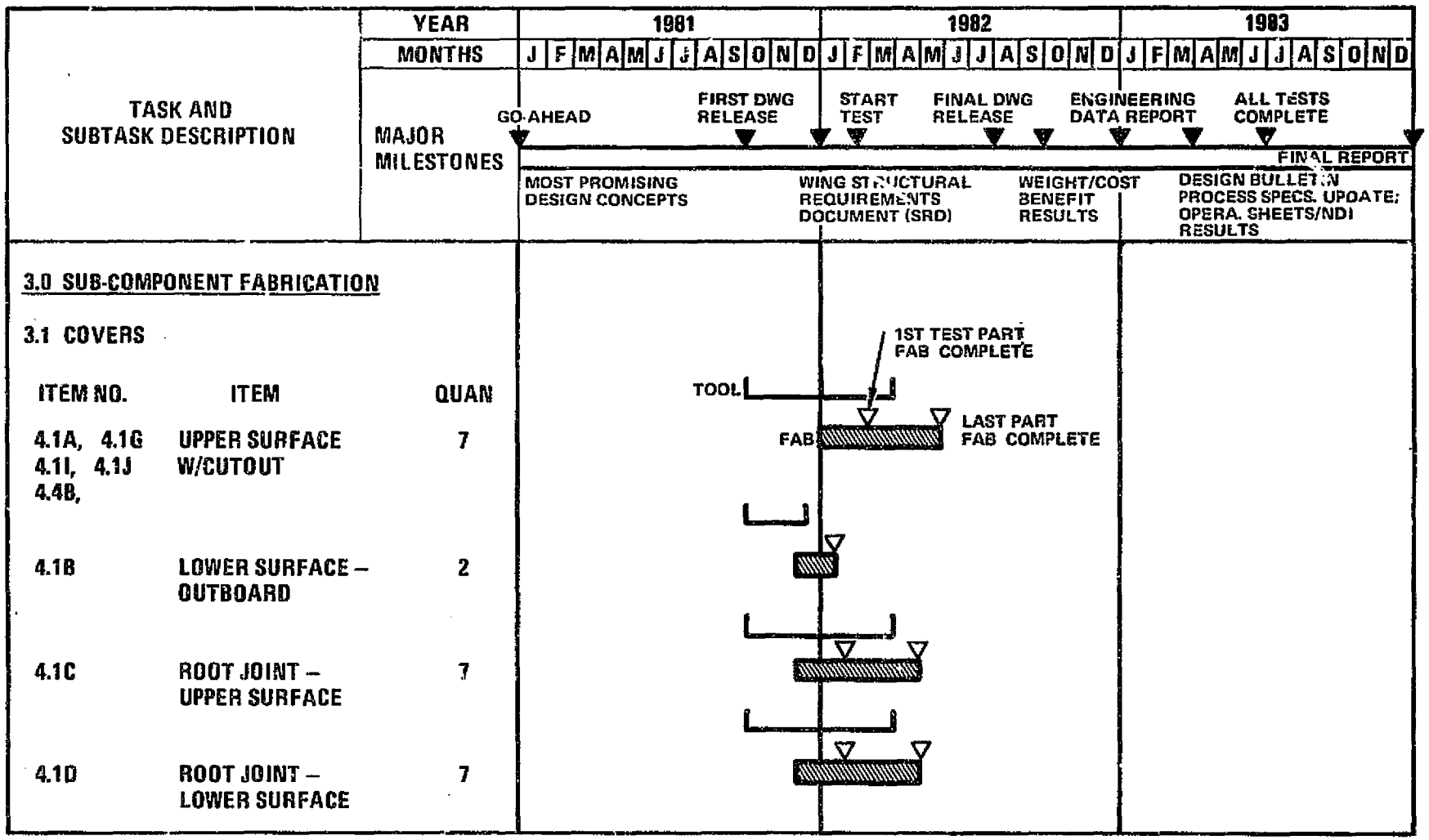

Figure 21. Preliminary Design Schedule (Sheet 3 of 12)

ORIGINAL PAGE IS OF POOR QUALITY

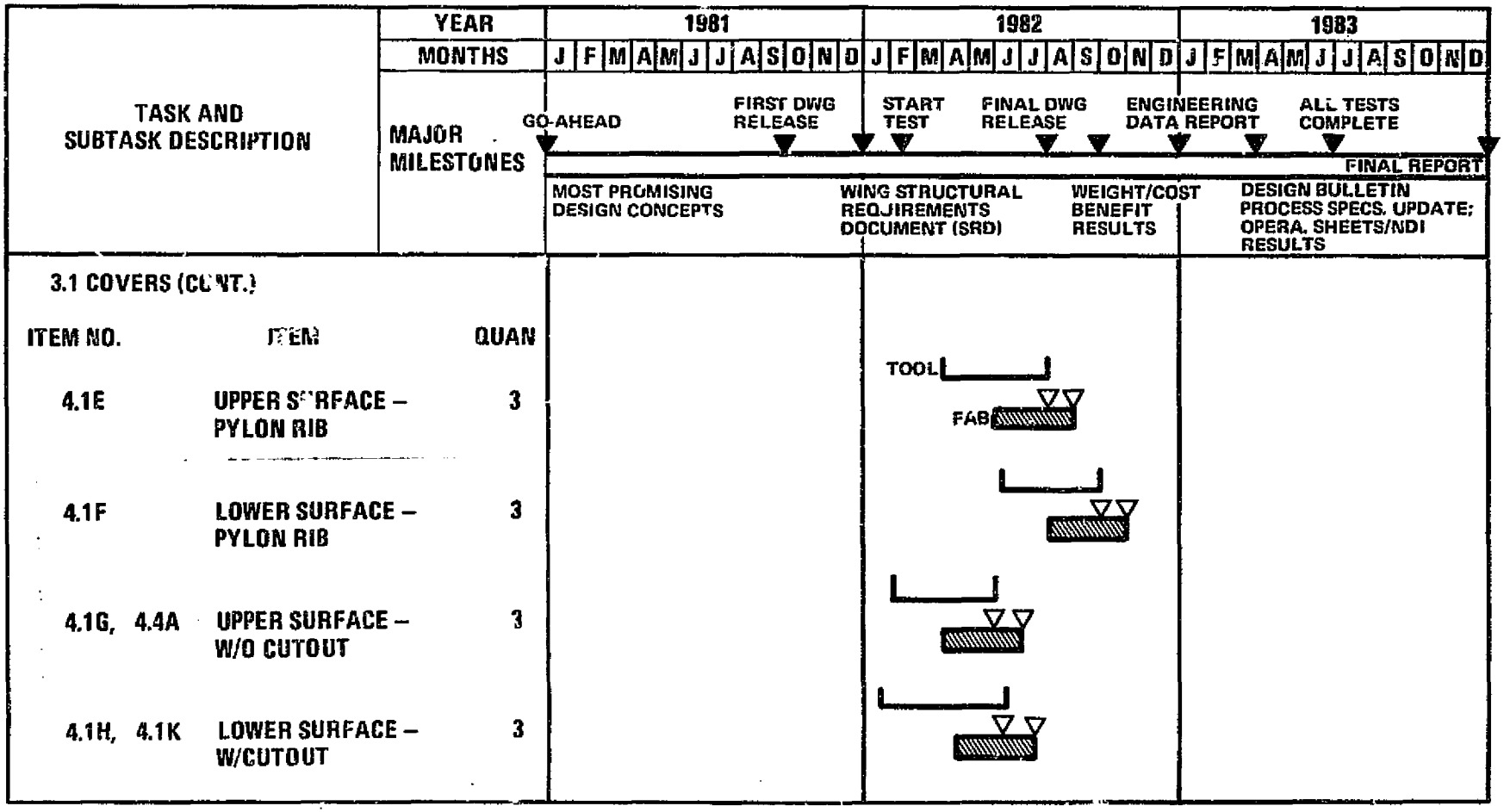

Figure 21. Preliminary Design Schedule (Sheet 4 of 12)

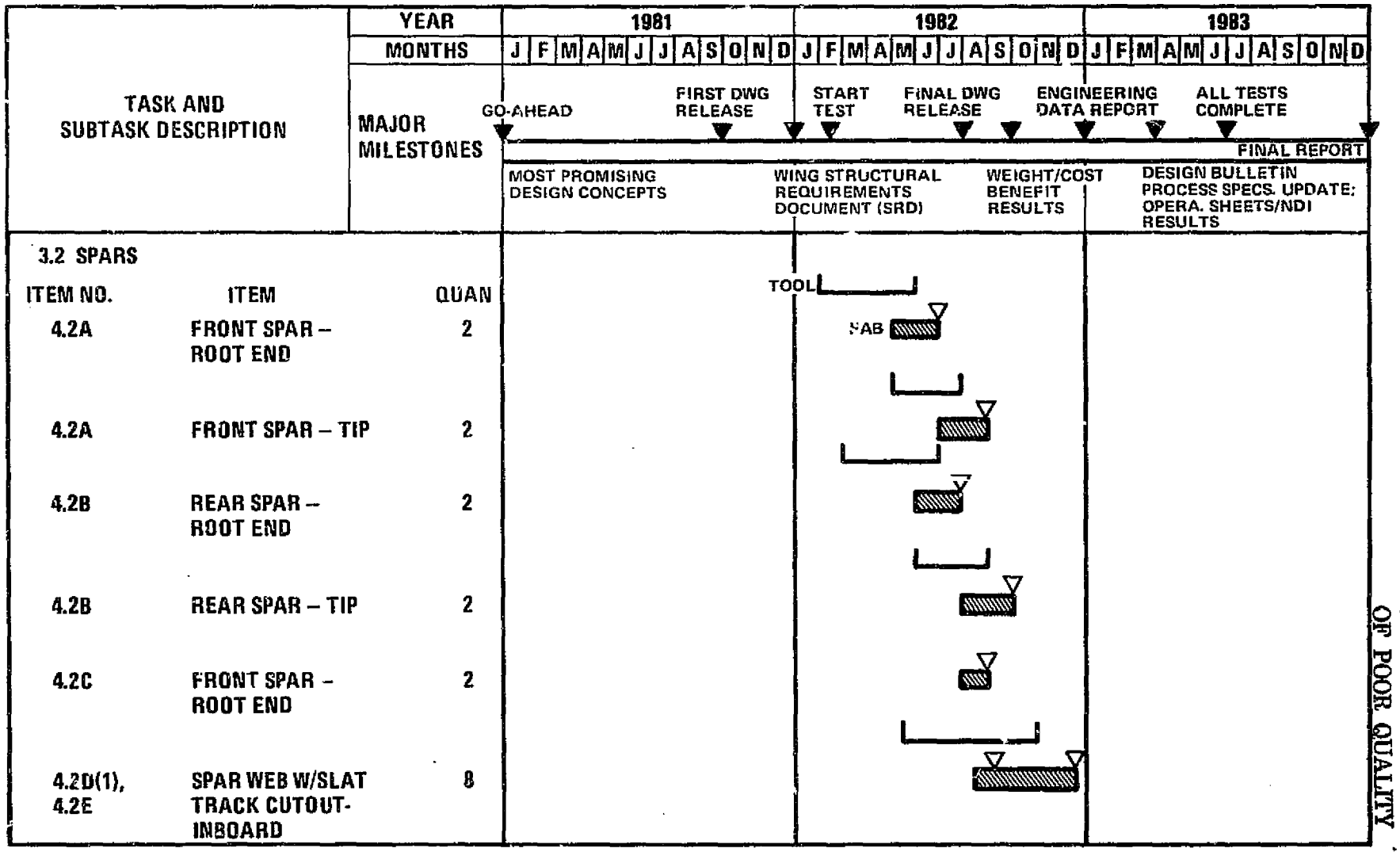

Figure 21. Preliminary Design Schedule (Sheet 5 of 12)

ORIGINAL PAGE IS OF POOR QUALITY

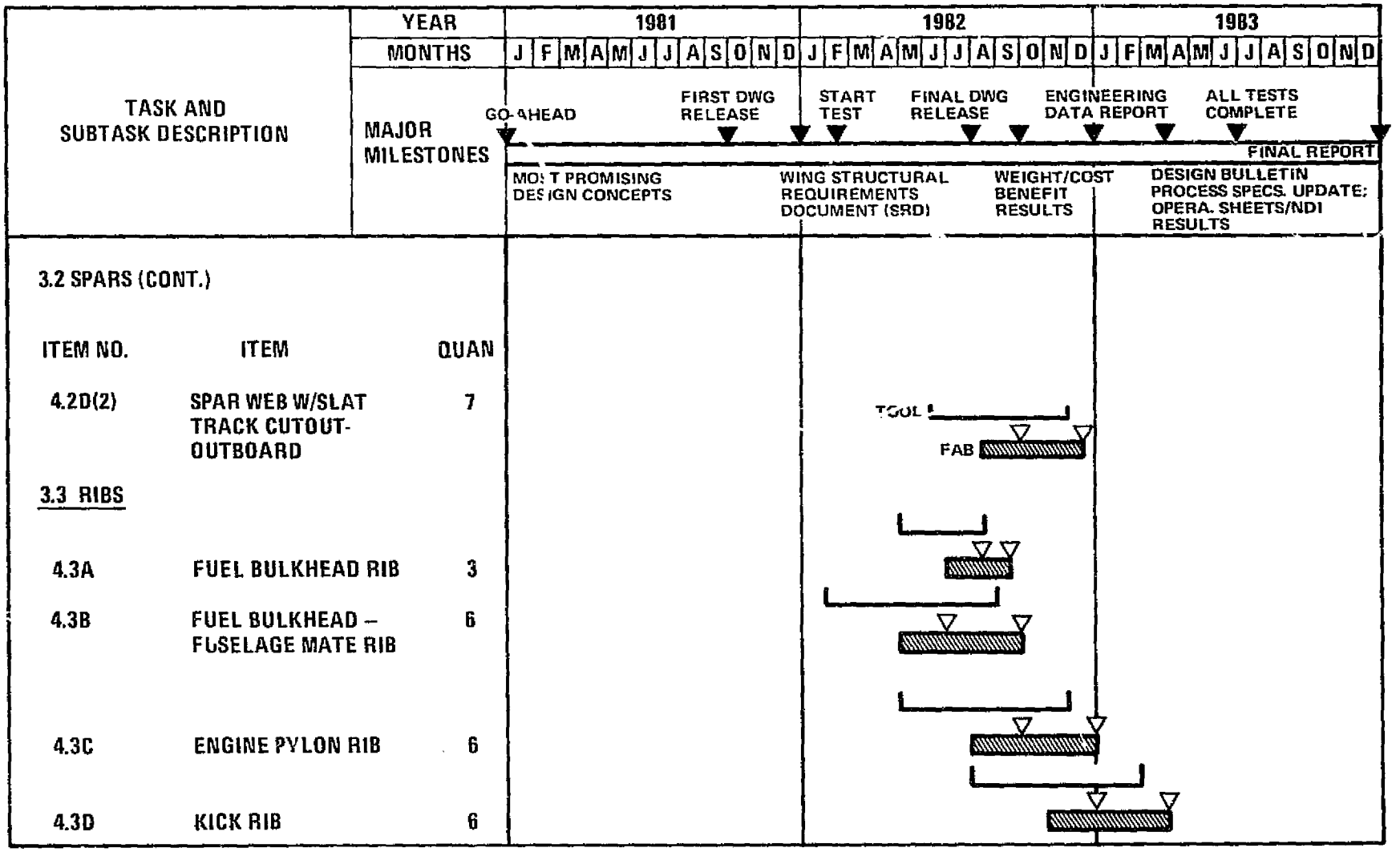

Figure 21. Preliminary Design Schedule (Sheet 6 of 12)

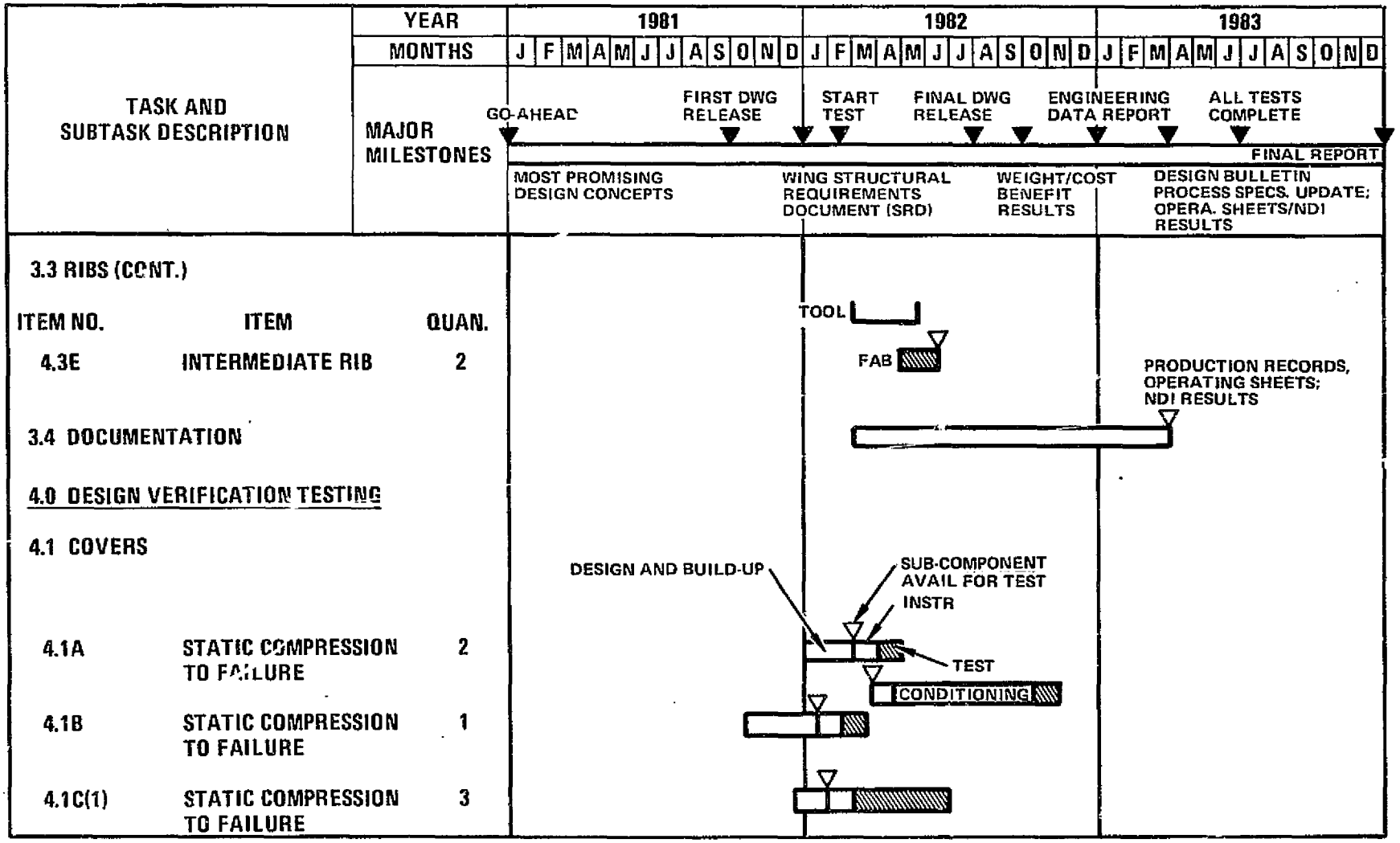

Figure 21. Preliminary Design Schedule (Sheet 7 of 12)

ORIGINAL PAGE IS OF POOR QUALITY

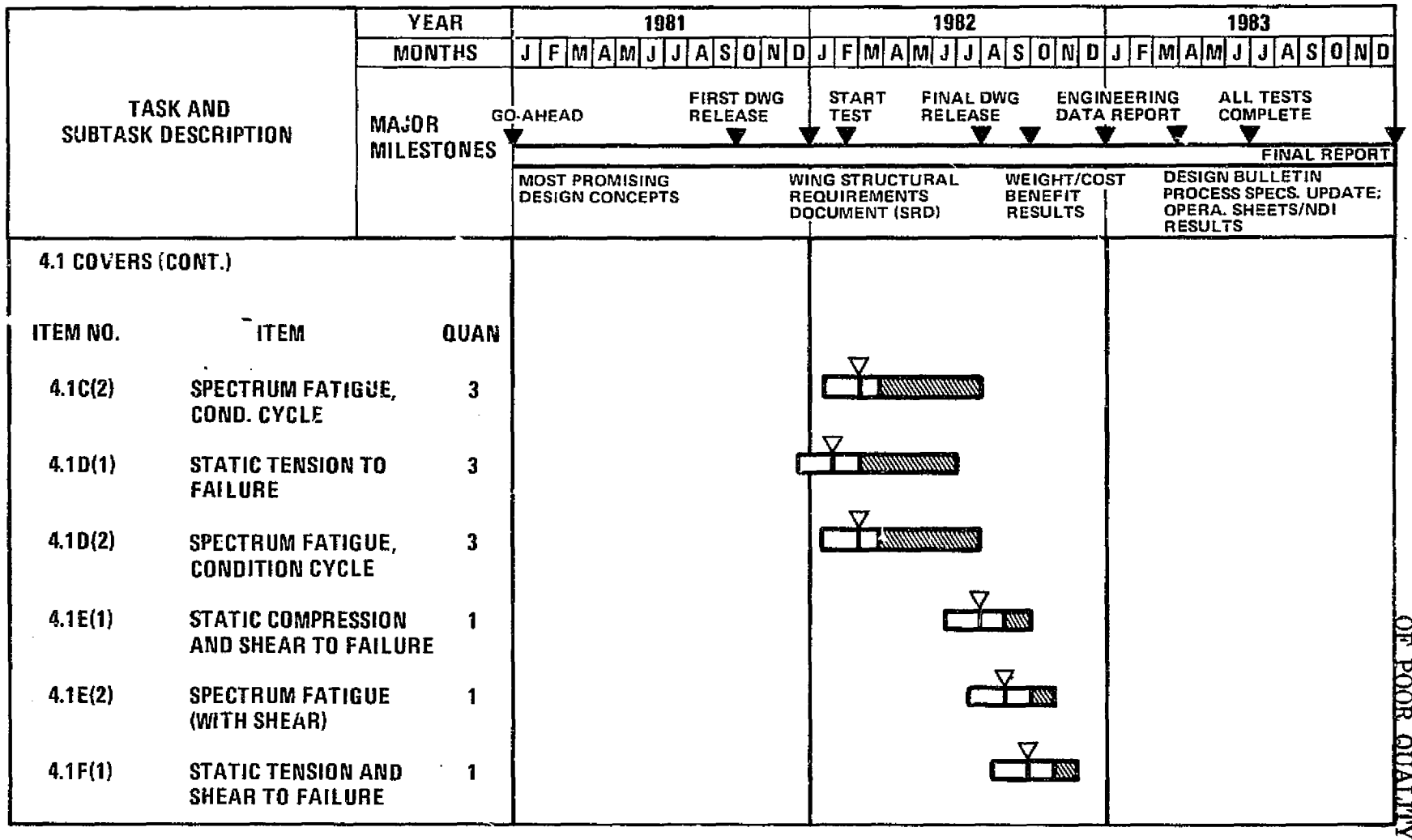

Figure 21. Preliminary Design Schedule (Sheet 8 of 12)

ORIGINAL PAGE IS OF POOR QUALITY

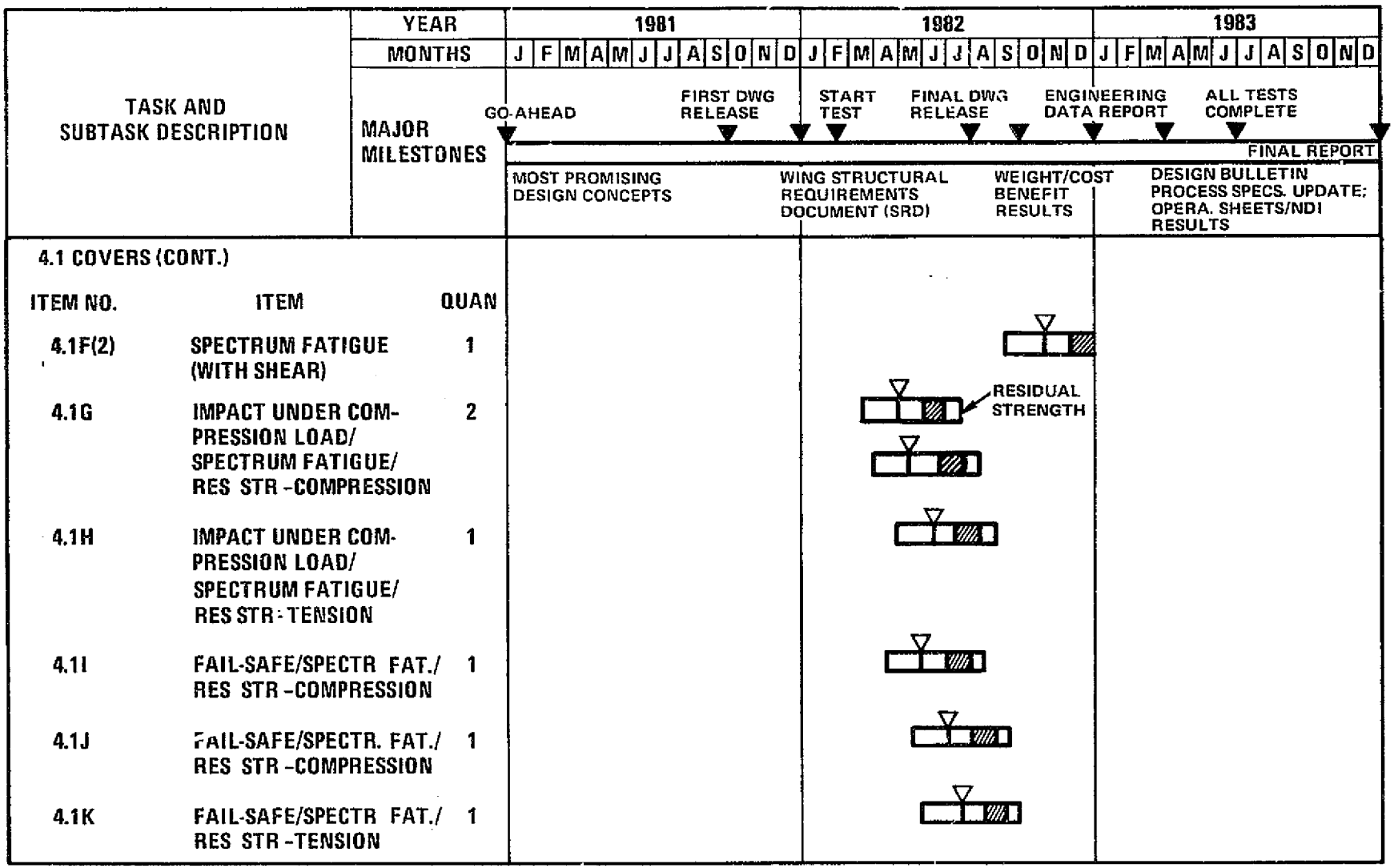

Figure 21. Preliminary Design Schedule (Sheet 9 of 12)

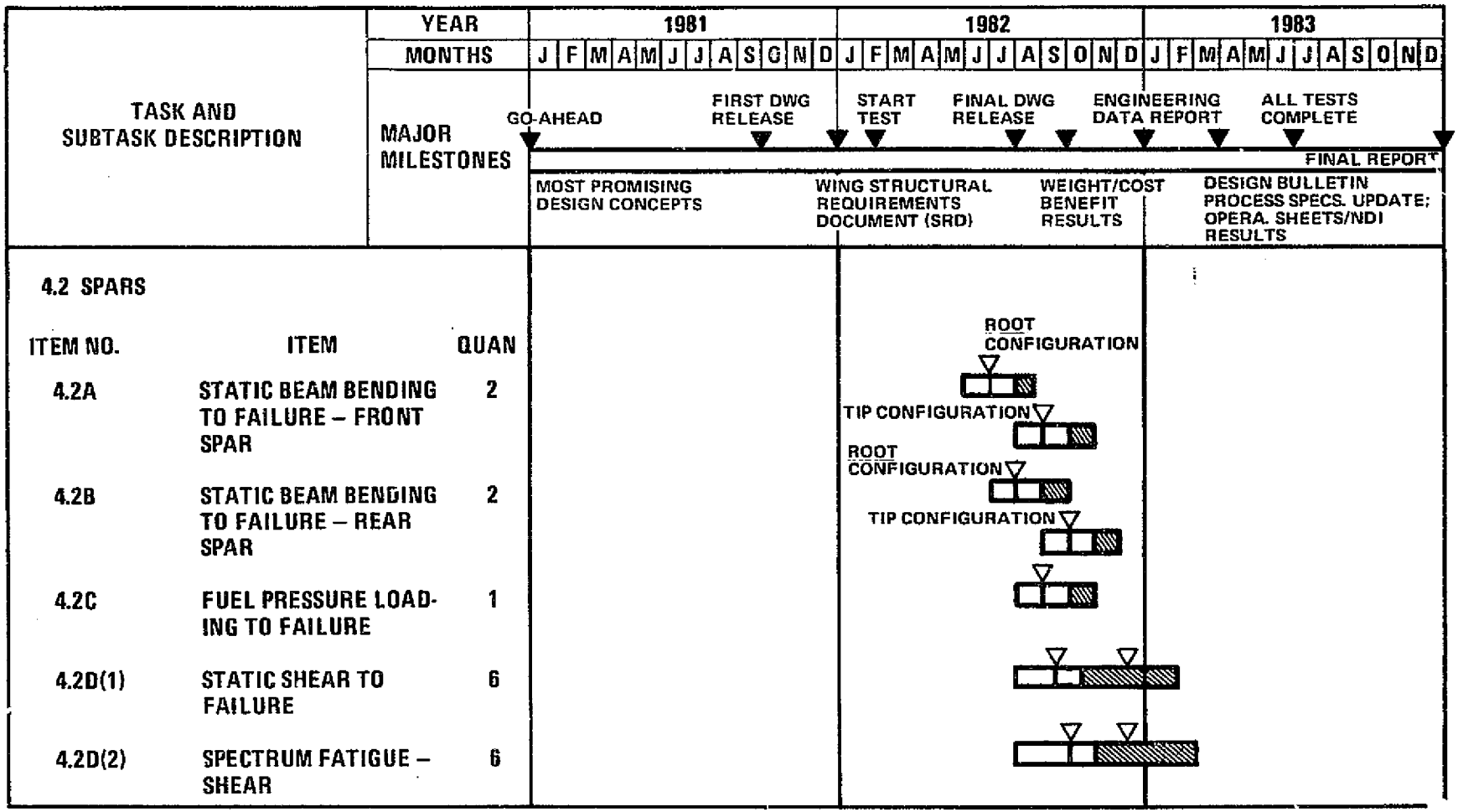

Figure 21. Preliminary Design Schedule (Sheet 10 of 12)

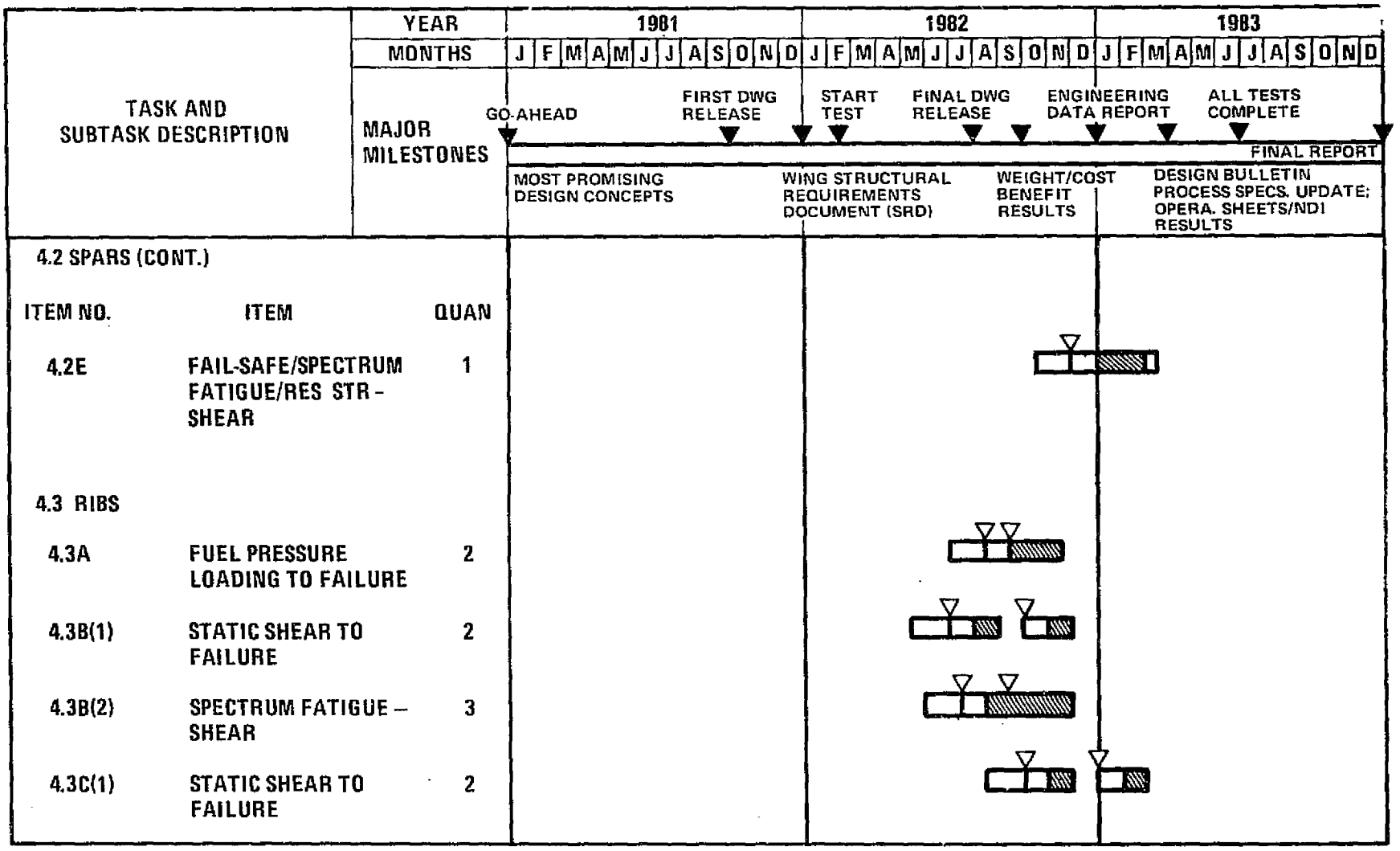

Figure 21. Preliminary Design Schedule (Sheet 11 of 12)

ORIGINAL PAGE IS OF POOR QUALITY

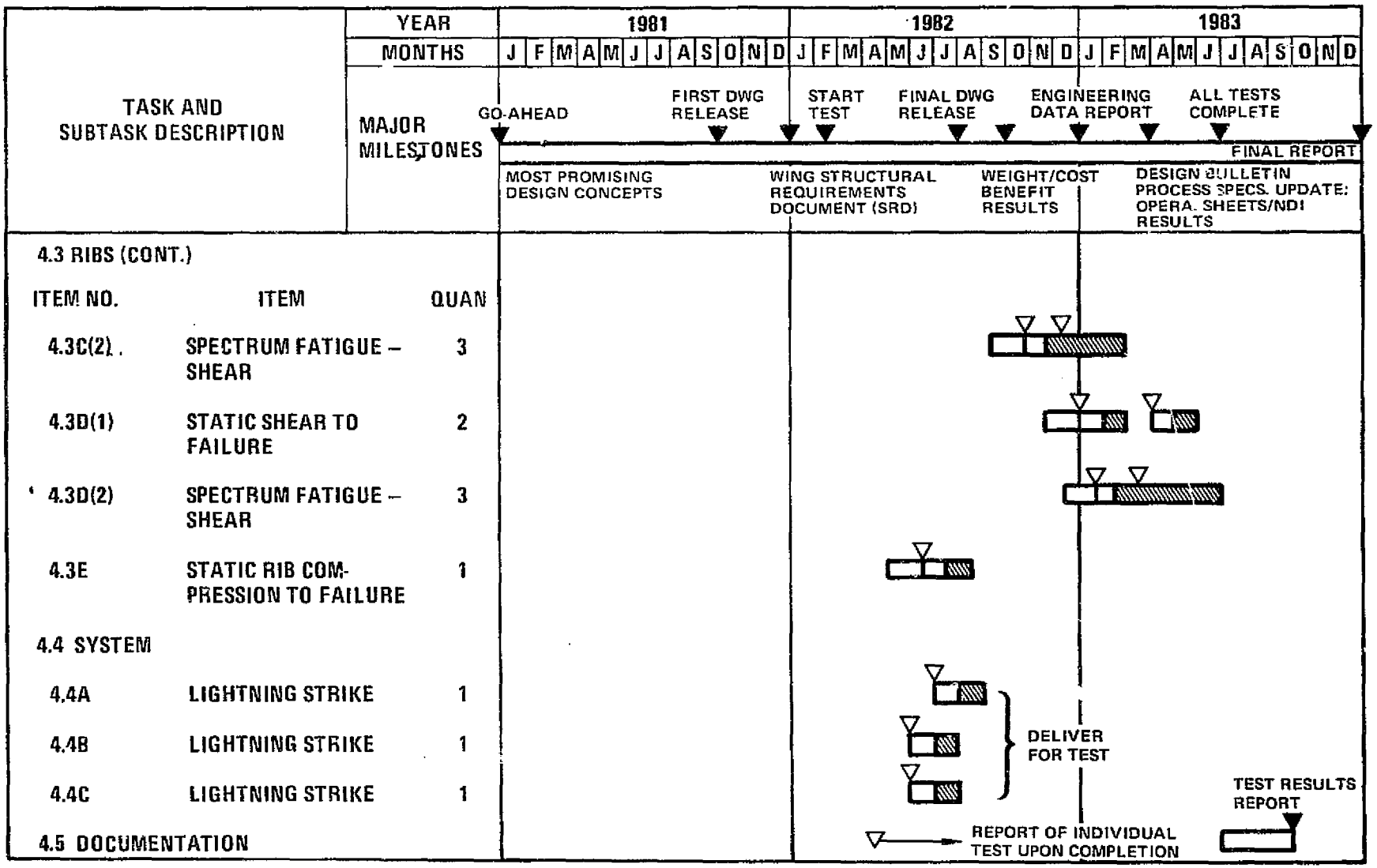

Figure 21. Preliminary Design Schedule (Sheet 12 of 12)

ORIGINAL PAGE IS OF POOR QUALITY

identified in the previous task. The design studies will be limited to representative wing structure considering appropriate design criteria and requirements including the associated structure/systems interface requirements.

Wing Design Criteria and Requirements. - The wing criteria and requirements will be updated to incorporate the results of the design strain level assessment. The improved characteristics of the new material system will also be accounted for as appropriate.

Preliminary Wing Design. - The drawings and layouts that defined the most promising concepts for a high aspect ratio wing design will be refined and expanded. The applicability of the design/manufacturing parameters developed for the interim material system (i.e., T300/5208 Gr/E with unidirectional noncrimped fabric) will be examined and changes to the design made, as appropriate.

The wing box structural arrangement will be revised to include configuration and sizing changes. Consideration for the lightning protection system will also be included in the design. Wing basic dimensions and loft drawings will be completed.

The upper and lower surface design will be developed, including chordwise and spanwise splices, as needed; access door and fuel probe cutouts; and rib attachment. The front and rear beam design will be selected and problem areas layed-out in detail. Rib designs will be worked out for each major type rib in the wing. These include, a typical rib, a tank end rib, and control surface and landing gear back-up ribs.

The wing-to-fuselage production joint will also be designed. Layouts will include the chordwise skin splices, spar splices, and the tension fittings at the upper and lower caps of the front and rear beams. Layouts will be made of the landing gear support structure which is attached to the rear beam. The engine pylon support structural attachments to the front beam and lower surface will also be designed. Leading and trailing edge attachment to the box will be developed as well as control surface interfaces.

The fuel tank sealing design will be completed and fuel system provisions will be accounted for. Electrical and hydraulic system provisions on the front and rear beam will also be provided.

Design Methodology and Analysis. - A systematic multidisciplinary design-analysis process will be employed in the structural evaluation of the composite wing design. The evaluation will encompass in-depth studies involving the interactions between airframe strength and stiffness, static and dynamics loads, flutter, fatigue and fail-safe design, thermal loads and the effect of active controls on the wing design. Due to the complex nature of these studies, extensive use will be made of computerized analysis programs.

A finite element structural analysis model will be employed to obtain internal loads and displacements for stress analysis, to calculate structural influence coefficients for aeroelastic loads and deflection analyses, and to determine stiffness and mass matrices to compute vibration modes for flutter analyses.

A more comprehensive aeroelastic analysis including symmetric and anti-symmetric maneuvers, gust and ground conditions will be conducted using the finite element model of the structure. Control effectiveness will be evaluated and more detailed flutter analysis will be performed. Structural model loads and aeroelastic analyses will be updated whenever significant stiffness characteristic changes are introduced into the finite element model. Loads on control surfaces, high lift devices, landing gear, and the engine pylon will be determined for interface with the wing box. Wing surface pressures and miscellaneous loads, e.g., fuel tank pressures, ruptured ducts, etc., will be established for inclusion in the structural analysis wherever they are considered to be significant.

The most promising wing structure design concepts will be subjected to in-depth structural analyses. Appropriate trade-off studies will be performed to obtain a least weight and cost-effective design. Analysis will include, not only the design loads environment, but also, the appropriate protection system for prevention of extensive damage of the airframe due to lightning strike and/or erosion. Methods of preventing an accidental release of graphite fibers by appropriate design considerations will be employed.

Test Component Definition. - Design concepts verification tests will be conducted to support the preliminary design of the high aspect ratio wing for a new subsonic commercial transport. A team of engineering and manufacturing/Q.A.

specialists will work together to select appropriate wing cover, spar, ribs and lightning strike protection system components for test. The engineering drawing release schedule (Figure 21) will be in accordance with the required fabrication and testing time-table.

Appropriate engineering drawings will also be released for the manufacture of a large wing surface panel for full-scale manufacturing feasibility and process verification tests (to be fabricated in a subsequent task).

Fabrication Methods Verification

Fabrication methods verification will be accomplished by selection of the tooling approach and processing methods for each component of the selected test articles. This task will also include updating of facility plans and manufacturing cost data.

Fabrication/Quality Assurance Plan. - Fabrication plans including quality assurance procedures will be developed for each detail part and assembly emanating from structural design based on latest revision of production design outlines, drawings, and process specifications. For selected critical components, it is planned to prove or verify that fabrication methods selected will produce hardware which meets design drawing requirements by constructing at least one (1) extra uni- of each subcomponent test article. This article will be evaluated by visual and dimensional inspection, non destructive test, and sectioning the component for lab-oratory tests. Any indicated deficiencies will be corrected by modification of tools or processes before construction of articles designated for engineering tests is commenced.

Cost Projections. - Following fabrication of the components for engineering test, an update of the production cost estimates will be made. The new estimate will be based on a tool plan which will have been partially proven through the design, manufacture, and use of the development tooling, and through the accumula-tion of actual cost data in the fabrication of the test components. Additional cost experience from the L-1011 composite fin program and other ongoing ACEE

programs will be available in this time frame to provide additional confidence in forecasting composite manufacturing costs. Thus, more data will be accumulated toward establishing cost standards necessary for accurately predicting production costs in the final phase of this program.

Manufacturing Facilities Plan. - The facilities plan initiated in the concepts development task covering items such as equipment and space lay-outs will be reviewed. The plan will be amended to be in accordance with any new requirements imposed by definitization in structural design.

Sub-Component Tooling and Fabrication

The manufacture of design verification test specimens will be similar to the manufacture of process development specimens. The components will basically consist of iterations of previous designs. Tools built to produce the earlier specimens are expected to be usable as is or with modifications to produce the components for these test articles. Minimum type assembly tooling will be built to demonstrate alignment for the joint and attachment point specimens.

Process specifications for the fabrication of the test components will be in a released format, and FAA-conformity inspection requirements or their equivalent will be applied. In addition to the non-destructive tests which will be performed on all specimens, a single unit of each basic configuration type i.e., skin surface, root joint, spar and rib segments will be fabricated for laboratory evaluation by sectioning, visual examination, and dimensional inspection.

Design Verification Testing

Design verification tests supporting the preliminary design task are summarized in Table 13. Sixty-four (64) structural sub-component and component tests are specified, including tests of covers, spars, ribs and the lightning strike protection system.

TABLE 13. SUMMARY OF DESIGN VERIFICATION TESTS

ITEM NO.	DESCRIPTION		NUMBER OF SPECIMENS	TYPE OF TEST	TEST VARIABLES	SPECIMEN CONFIGURATION	PURPOSE OF TEST
4.1	COVERS	A. UPPER SURFACE MANHOLE	2	STATIC COMPRESSION TO FAILURE	1 DESIGN: 2 TEST ENVIRONMENTS, RTD, AND 356K (180°F) WITH 6 MO'S CYCLIC TEMPERATURE AND HUMIDITY PRECONDITIONING	1.83 x 1.22m (6 x 4ft) STIFFENED PANEL, WITH MANHOLE	UPPER SURFACE MANHOLE DESIGN VERIFICATION; ASSESSMENT OF ENVIRONMENT EFFECT
		B. LOWER SURFACE, OUTBOARD	1	STATIC COMPRESSION TO FAILURE, 180°F WET	1 DESIGN	1.83 x 0.91m (6 x 3ft) STIFFENED PANEL WITH 2 RIB SUPPORTS	OUTBOARD LOWER SURFACE PANEL DESIGN VERIFICATION
		C. UPPER SURFACE WING ROOT JOINT					
		(1)	3	STATIC COMPRESSION TO FAILURE	1 DESIGN: 3 TEST ENVIRONMENTS, RTD, 219K (-65°F) DRY, AND 356K (180°F) WET	1.22 x 0.30m (4 x 1ft) STIFFENED PANEL WITH ROOT JOINT	UPPER SURFACE WING ROOT JOINT DESIGN VERIFICATION: STATIC STRENGTH, ENVIRONMENTAL EFFECTS
		(2)	3	SPECTRUM FATIGUE, COMPRESSION-DOMINATED LOADING SPECTRUM, WITH CYCLIC TEMPERATURE AND HUMIDITY, 2 LIFETIMES	1 DESIGN	1.22 x 0.30m (4 x 1ft) STIFFENED PANEL, WITH ROOT JOINT	UPPER SURFACE WING ROOT JOINT DESIGN VERIFICATION; FATIGUE STRENGTH
		D. LOWER SURFACE WING ROOT JOINT					
		(1)	3	STATIC TENSION TO FAILURE	1 DESIGN, 3 TEST ENVIRONMENTS, RTD, 219K (-65°F) DRY, AND 356K (180°F) WET	1.22 x 0.30m (4 x 1ft) STIFFENED PANEL, WITH ROOT JOINT	LOWER SURFACE WING ROOT JOINT DESIGN VERIFICATION; STATIC STRENGTH, ENVIRONMENTAL EFFECTS
		(2)	3	SPECTRUM FATIGUE, TENSION DOMINATED LOADING SPECTRUM, WITH CYCLIC TEMPERATURE AND HUMIDITY, 2 LIFETIMES	1 DESIGN	1.22 x 0.30m (4 x 1ft) STIFFENED PANEL, WITH ROOT JOINT	LOWER SURFACE WING ROOT JOINT DESIGN VERIFICATION; FATIGUE STRENGTH
		E. UPPER SURFACE-PYLON RIB INTERFACE					
		(1)	1	STATIC COMPRESSION AND SHEAR TO FAILURE	1 DESIGN	1.22 x 0.91m (4 x 3ft) STIFFENED PANEL, WITH RIB ATTACHMENT	UPPER SURFACE-PYLON RIB INTERFACE DESIGN VERIFICATION;STATIC STRENGTH
		(2)	1	SPECTRUM FATIGUE, COMPRESSION DOMINATED LOADING SPECTRUM, WITH SHEAR, 2 LIFETIMES	1 DESIGN	1.22 x 0.91m (4 x 3ft) STIFFENED PANEL, WITH RIB ATTACHMENT	UPPER SURFACE-PYLON RIB INTERFACE DESIGN VERIFICATION;FATIGUE STRENGTH
		F. LOWER SURFACE-PYLON RIB INTERFACE					
		(1)	1	STATIC TENSION AND SHEAR TO FAILURE	1 DESIGN	1.22 x 0.91m (4 x 3ft) STIFFENED PANEL, WITH RIB ATTACHMENT	LOWER SURFACE-PYLON RIB INTERFACE DESIGN VERIFICATION; STATIC STRENGTH

ORIGINAL PAGE IS OF POOR QUALITY

TABLE 13. SUMMARY OF DESIGN VERIFICATION TESTS (Continued)

ITEM NO.	DESCRIPTION		NUMBER OF SPECIMENS	TYPE OF TEST	TEST VARIABLES	SPECIMEN CONFIGURATION	PURPOSE OF TEST
		(2)	1	SPECTRUM FATIGUE, TENSION DOMINATED LOADING SPECTRUM, WITH SHEAR, 2 LIFETIMES	1 DESIGN	1.22 x 0.91m (4 x 3ft) STIFFENED PANEL WITH RIB ATTACHMENT	LOWER SURFACE-PYLON RIB INTERFACE DESIGN VERIFICATION; FATIGUE STRENGTH
		G. UPPER SURFACE, IMPACT RESISTANCE	2	IMPACT UNDER LOAD (OPERATING STRAIN LEVEL), 2 LOCATIONS; SPECTRUM FATIGUE, COMPRESSION DOMINATED LOADING SPECTRUM, 2 LIFETIMES; STATIC COMPRESSION TO FAILURE	2 DESIGNS	1.83 x 1.22m (6 x 4ft) STIFFENED PANEL WITH AND WITHOUT MANHOLE	UPPER SURFACE IMPACT RESISTANCE DESIGN VERIFICATION
		H. LOWER SURFACE, IMPACT RESISTANCE	1	IMPACT UNDER LOAD (OPERATING STRAIN LEVEL), 2 LOCATIONS; SPECTRUM FATIGUE, TENSION DOMINATED LOADING SPECTRUM, 2 LIFETIMES; STATIC TENSION TO FAILURE	1 DESIGN	1.83 x 1.22m (6 x 4ft) STIFFENED PANEL, WITH CUTOUT	LOWER SURFACE IMPACT RESISTANCE DESIGN VERIFICATION
		I. UPPER SURFACE MANHOLE FAIL-SAFE	1	SPECTRUM FATIGUE, COMPRESSION DOMINATED LOADING SPECTRUM, 1/2 LIFETIME; STATIC COMPRESSION TO FAILURE	1 DESIGN	1.83 x 1.22m (6 x 4ft) STIFFENED PANEL WITH MANHOLE; 1 STIFFENER CUT AT EDGE OF MANHOLE	UPPER SURFACE MANHOLE FAIL-SAFE DESIGN VERIFICATION
		J. UPPER SURFACE PANEL FAIL-SAFE	1	SPECTRUM FATIGUE COMPRESSION DOMINATED LOADING SPECTRUM, 1/2 LIFETIME; STATIC COMPRESSION TO FAILURE	1 DESIGN	1.83 x 1.22m (6 x 4ft) STIFFENED PANEL, CENTER STIFFENER AND ADJACENT SKIN CUT	UPPER SURFACE FAIL-SAFE DESIGN VERIFICATION
		K. LOWER SURFACE PANEL WITH CUTOUT, FAIL-SAFE	1	SPECTRUM FATIGUE, TENSION DOMINATED LOADING SPECTRUM, 1/2 LIFETIME; STATIC TENSION TO FAILURE	1 DESIGN	1.83 x 1.22m (6 x 4ft) STIFFENED PANEL WITH CUTOUT; 1 STIFFENER CUT AT EDGE OF CUTOUT	LOWER SURFACE FAIL-SAFE DESIGN VERIFICATION
4.2	SPARS	A. FRONT SPAR, BENDING	2	STATIC BEAM BENDING TO FAILURE	2 DESIGNS (ROOT END AND TIP CONFIGURATIONS)	3.05m (10ft) CANTILEVER BEAM	FRONT SPAR DESIGN VERIFICATION
		B. REAR SPAR, BENDING	2	STATIC BEAM BENDING TO FAILURE	2 DESIGNS (ROOT END AND TIP CONFIGURATIONS)	3.05m (10ft) CANTILEVER BEAM	REAR SPAR DESIGN VERIFICATION
		C. FRONT SPAR WEB, PRESSURE	1	FUEL PRESSURE LOADING TO FAILURE	1 DESIGN	1.83m (6ft) SPAR SEGMENT	SPAR WEB PRESSURE DESIGN VERIFICATION

TABLE 13. SUMMARY OF DESIGN VERIFICATION TESTS (Continued)

ITEM NO.	DESCRIPTION		NUMBER OF SPECIMENS	TYPE OF TEST	TEST VARIABLES	SPECIMEN CONFIGURATION	PURPOSE OF TEST
		D. SPAR WEB SLAT TRACK CUTOUT					
		(1)	6	STATIC SHEAR TO FAILURE	2 DESIGNS (INBD & OUTBD CONFIGURATIONS); 3 TEST ENVIRONMENTS, RTD, 356K (180°F) WET, AND RT AFTER 1 MO FUEL SOAK	0.91 x 0.91m (3 x 3ft) PANEL WITH CUTOUT	SPAR WEB CUTOUT DESIGN VERIFICATION; STATIC STRENGTH, ENVIRONMENTAL EFFECTS
		(2)	6	SPECTRUM FATIGUE, SHEAR, 2 LIFETIMES	2 DESIGNS (INBD & OUTBD CONFIGURATIONS); 3 TEST ENVIRONMENTS, RTD, 180° F WET, AND RT AFTER 1 MO FUEL SOAK	0.91 x 0.91m (3 x 3ft) PANEL WITH CUTOUT	SPAR WEB CUTOUT DESIGN VERIFICATION; FATIGUE STRENGTH, ENVIRONMENTAL EFFECTS
		E. SPAR WEB SLAT TRACK CUTOUT, FAIL-SAFE	1	SPECTRUM FATIGUE, SHEAR WITH CYCLIC TEMPERATURE AND HUMIDITY, 1/2 LIFETIMES; STATIC SHEAR TO FAILURE	1 DESIGN	0.91 x 0.91m (3 x 3ft) PANEL WITH CUTOUT AND IMPOSED DAMAGE	SPAR WEB CUTOUT FAIL-SAFE DESIGN VERIFICATION
4.3	RIBS	A. FUEL BULKHEAD RIB	2	FUEL PRESSURE LOADING TO FAILURE	1 DESIGN; 2 TEST ENVIRONMENTS, RTD AND 356K (180°F) WET	1.83m (6ft) RIB SEGMENT	FUEL BULKHEAD RIB DESIGN VERIFICATION; PRESSURE, ENVIRONMENTAL EFFECTS
		B. WING ROOT RIB WEB					
		(1)	2	STATIC SHEAR TO FAILURE	1 DESIGN	0.91 x 0.91m (3 x 3ft) PANEL	ROOT RIB WEB DESIGN VERIFICATION; STATIC STRENGTH
		(2)	3	SPECTRUM FATIGUE, SHEAR, 2 LIFETIMES	1 DESIGN	0.91 x 0.91m (3 x 3ft) PANEL	ROOT RIB WEB DESIGN VERIFICATION; FATIGUE STRENGTH
		C. PYLON RIB WEB					
		(1)	2	STATIC SHEAR TO FAILURE	1 DESIGN	0.91 x 0.91m (3 x 3ft) PANEL	PYLON RIB WEB DESIGN VERIFICATION; STATIC STRENGTH
		(2)	3	SPECTRUM FATIGUE, SHEAR, 2 LIFETIMES	1 DESIGN	0.91 x 0.91m (3 x 3ft) PANEL	PYLON RIB WEB DESIGN VERIFICATION; FATIGUE STRENGTH
		D. KICK RIB WEB					
		(1)	2	STATIC SHEAR TO FAILURE	1 DESIGN	0.91 x 0.91m (3 x 3ft) PANEL	KICK RIB WEB DESIGN VERIFICATION; STATIC STRENGTH
		(2)	3	SPECTRUM FATIGUE, SHEAR, 2 LIFETIMES	1 DESIGN	0.91 x 0.91m (3 x 3ft) PANEL	KICK RIB WEB DESIGN VERIFICATION; FATIGUE STRENGTH
		E. INTERMEDIATE RIB CRUSHING	1	STATIC RIB COMPRESSION TO FAILURE	1 DESIGN	0.30m (1ft) RIB SEGMENT	INTERMEDIATE RIB DESIGN VERIFICATION
4.4	LIGHTNING STRIKE PROTECTION SYSTEM	A. UPPER SURFACE PANEL	1	LIGHTNING STRIKE	1 DESIGN	0.60 x 0.60m (2 x 2ft) STIFFENED PANEL	SURFACE PANEL LIGHTNING STRIKE PROTECTION SYSTEM DESIGN VERIFICATION
		B. ACCESS DOOR	1	LIGHTNING STRIKE	1 DESIGN	0.91 x 0.91m (3 x 3ft) STIFFENED PANEL, WITH ACCESS DOOR	ACCESS DOOR LIGHTNING PROTECTION SYSTEM DESIGN VERIFICATION
		C. SKIN SPLICE	1	LIGHTNING STRIKE	1 DESIGN	0.60 x 0.60m (2 x 2ft) STIFFENED PANEL, WITH SPLICE JOINT	SPLICE JOINT LIGHTNING PROTECTION SYSTEM DESIGN VERIFICATION

ORIGINAL PAGE IS OF POOR QUALITY

Both static strength and flight-by-flight spectrum fatigue testing are proposed for the design verification. In addition, temperature and humidity are included in selected tests to assess environmental effects on the strength and durability of built-up, complex composite wing structures. Tests also are included to verify design approaches for impact resistance, fuel pressure loadings, fail-safety, and lightning strike protection.

The design verification testing schedule is shown as subtask 4.0 in the previously presented Figure 21. The testing extends over a period of two years, through the end of 1983.

Covers. - Twenty-five (25) wing cover design verification tests are specified. These tests address the following: upper surface panel with access door cutout; outboard lower surface panel; upper and lower surface wing root joints; upper and lower surface pylon rib interfaces; upper and lower surface impact resistance; upper surface manhole, fail-safe; upper surface panel, fail-safe; and lower surface panel with cutout, fail-safe.

Spars. - Eighteen (18) wing spar design verification tests are specified, including: front and rear spar bending; front spar web, fuel pressure; spar web slat track cutout; and spar web slat track cutout, fail-safe.

Ribs. - Eighteen (18) wing rib design verification tests are specified, including: fuel bulkhead rib; wing root rib web; pylon rib web; kick rib web; and intermediate rib crushing.

Lightning Strike Protection System. - Three (3) lightning strike protection system design verification tests are specified: an upper surface panel, an access door, and a skin splice. It is planned to have these tests conducted at the Lightning Test Research Institute (LTRI).

DEMONSTRATION ARTICLE DEVELOPMENT

The demonstration and validation of (1) manufacturing processes and feasibility and (2) structural integrity of composite wing designs are proposed to be undertaken by fabrication of a 27.8 m^2 (300 ft^2) wing cover segment, and a wing box test specimen with approximately 10 m^2 (108 ft^2) of planform area, respectively. The proposed schedule for this task is presented on Figure 22. Upon satisfactory completion, this proposed task will demonstrate technology readiness to (1) achieve the fuel savings goal of the ACEE Program, and (2) provide Company management confidence to commit to producing a wing of a new aircraft in the 1985-1990 time-period employing extensive amounts of composite materials.

An alternative effort encompassing the detailed engineering design, fabrication and test of a significant portion of the high aspect ratio wing was planned in sufficient detail to define the schedule and resource needs. The proposed effort, described in Appendix E for information only, was not considered a viable option in terms of the high cost weighted against the potential benefits attainable by such an effort.

Manufacturing Process Demonstration and Validation Article

The proposed validation of the wing design relative to full-scale manufacturing feasibility and of the manufacturing processes developed previously will be accomplished by fabricating a 1.52 x 18.26 m (5 x 60 ft) wing cover segment, Figure 23. Engineering drawings, including loft drawings prepared during Preliminary Design, will be made available at go-ahead (Jan. 1983). Production-type tools will be employed in the fabrication of the surface panel specimens. Shop orders and other controlling documents will assure full conformance to Engieering and Quality Assurance requirements.

The wing cover segment will, by its configuration, provide a practical look at the task of constructing a large composite structure. The segment, which is the longest continuous span structure which can be accommodated in the existing autoclave, will validate such processes as: layup of very thick sections, cure cycles for structures with thick and thin sections, tooling for cocuring stiffeners to skin, thermal expansion effects between tool and part, and handling problems due to

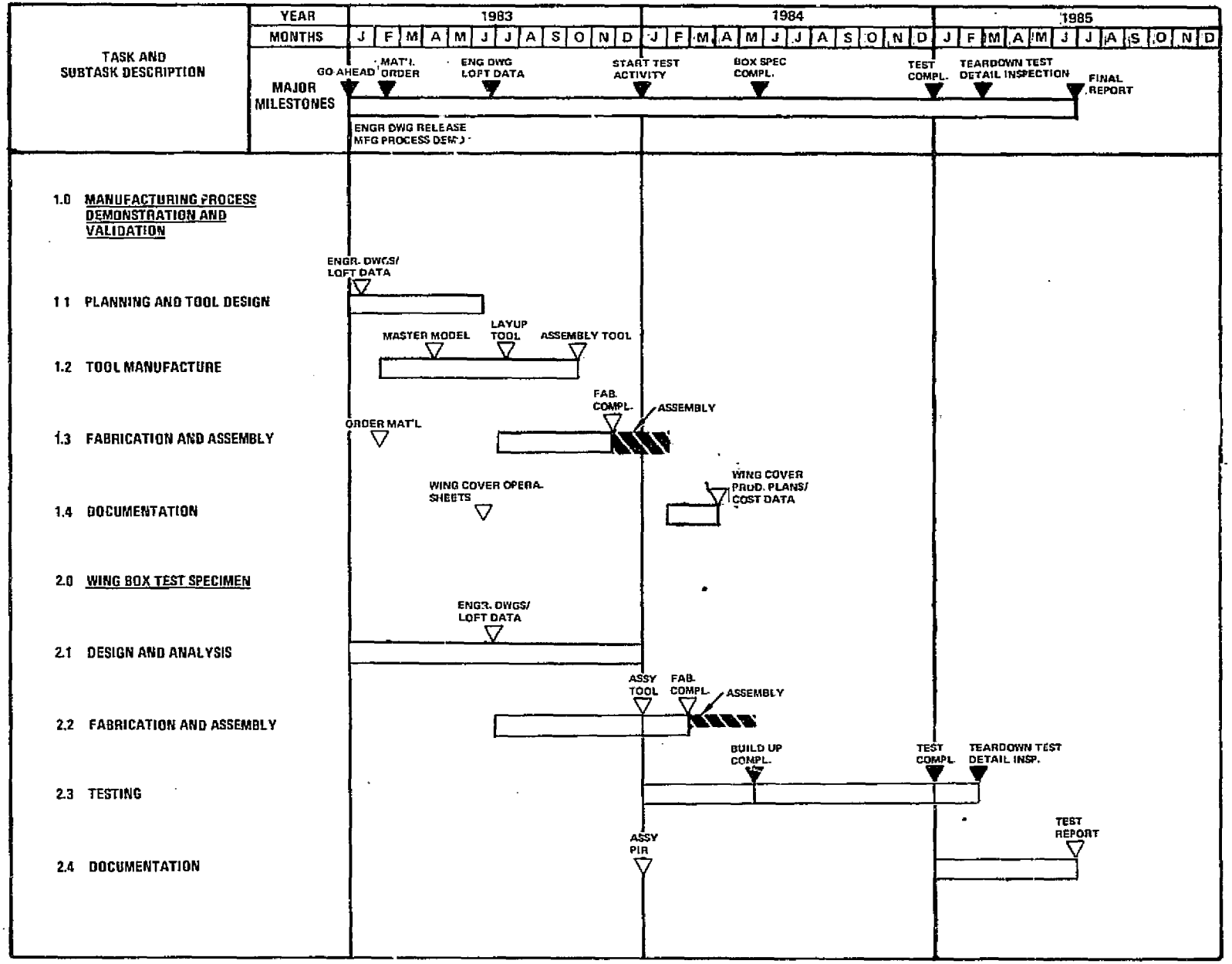

Figure 22. Demonstration Article Development Schedule

ORIGINAL PAGE IS OF POOR QUALITY

size of part. The inspection techniques found applicable to critical wing cover segments in the previous Preliminary Design task will be employed to verify adequacy of NDI methods and to demonstrate cover integrity.

The completed article will also be evaluated by visual examination, dimensional inspection and mechanical tests of panels cut from the cover. Suspect areas may be sectioned and samples subjected to laboratory tests. Determinations such as fiber-resin ratio, void content, and detection and identification of defects would be made.

Wing Box Test Specimen

It is proposed that a representative wing box segment as shown in Figure 24 be designed, fabricated, and tested to verify and demonstrate that both Engineering and Manufacturing/QA requirements can be met when integrating major wing components into a box assembly.

Design and Analysis. - Layout and detail drawings required to fabricate and assemble an untapered box section 4.6 m (181.5 in) long with a 2.0 m (78.9 in) chord and a depth of 0.8 m (31.6 in) will be developed. In order to conserve resources, the sub-components designed and fabricated for design verification testing will be employed in the box specimen to the extent possible.

A finite element structural analysis model of the box specimen will be developed to support the design/analysis and test efforts. The applied loads (i.e. shear, bending moments, torsional moments) for design and test will be consistent with the designs loads environment for the various components employed in the box. Local loads (i.e., airloads, fuel pressure) will be included.

Fabrication and Assembly. - The representative wing box will contain covers (with and without access doors) for the upper and lower surface, the front and rear spar, and eight full ribs. Major joints and variations of spar and rib concepts can be employed. All components will be fabricated by production personnel in a production environment. The fabrication of the components and the assembly of the components into a structure which meets Engineering and Quality Assurance requirements will demonstrate the validity of all tooling and processing concepts involved.

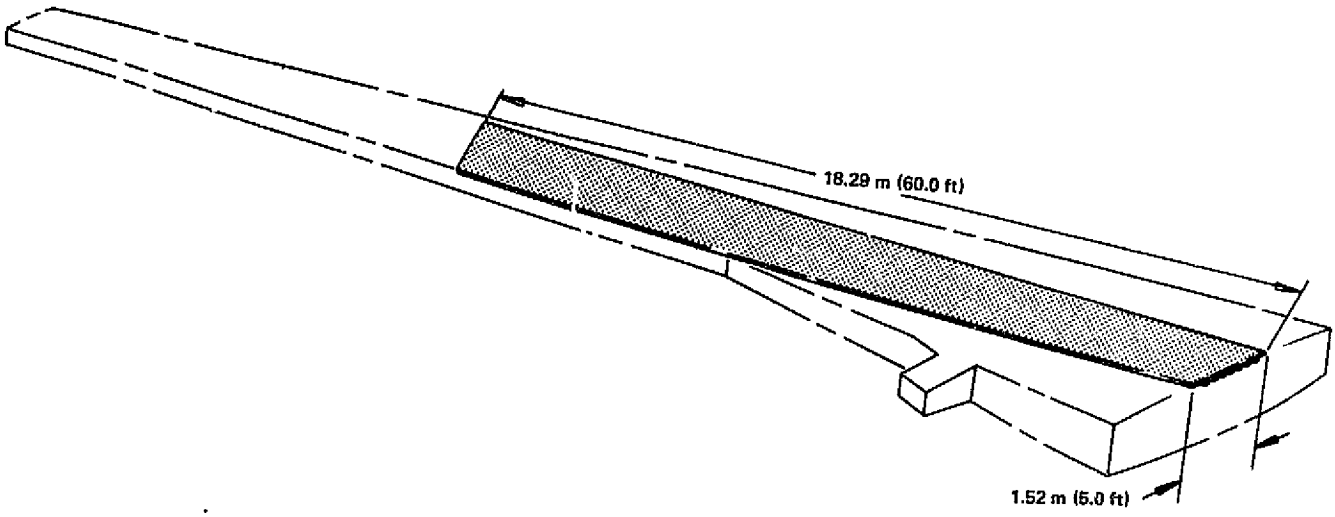

Figure 23. Process Demonstration/Validation Panel

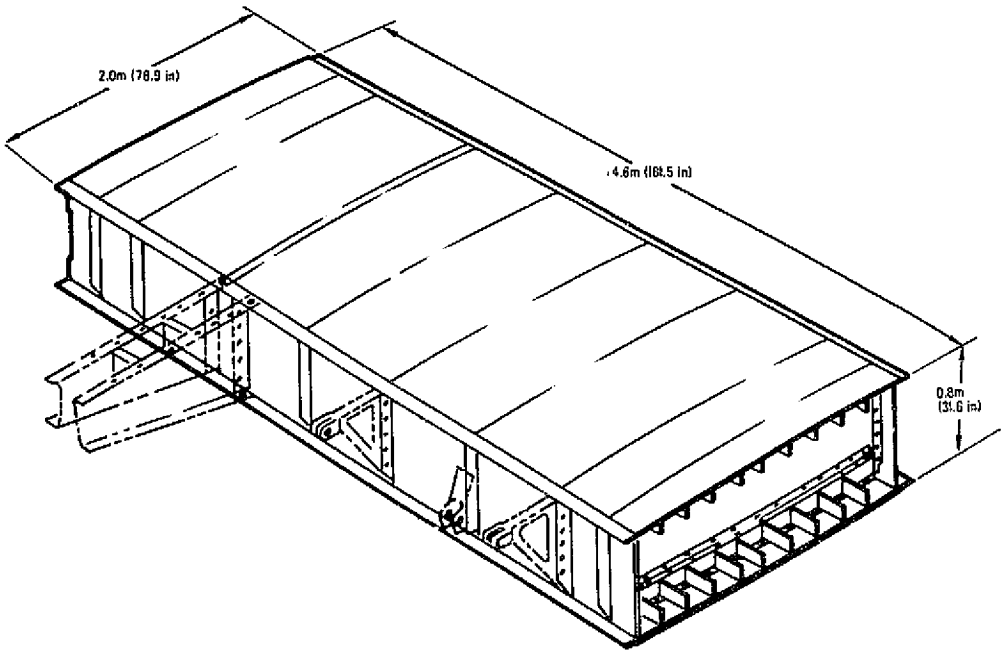

Figure 24. Representative Wing Box Test Specimen

ORIGINAL PAGE IS
OF POOR QUALITY

Additional detail on typical tooling and fabrication processes involved in manufacture of wing components are described in Appendix A of this report.

Testing. - A series of limit load tests, fail-safe tests, damage growth characteristic tests, repair verification tests and an ultimate load test will be conducted. In the fail-safe tests, major members will be severed and the structure loaded to demonstrate fail-safe capability. After testing, these imposed damages will be repaired, and the integrity of the repairs verified in subsequent tests. Upon completion of the prescribed tests, tear-down inspection will be conducted.

The applied loads will match the design shear, bending moment and torsional moment loading for the particular area of investigation. The box will be arranged for testing in a universal testing frame and loads applied by hydraulic jacks. Appropriate instrumentation will be provided to monitor the tests.

The design, fabrication and testing of the wing box specimen will provide further information on some of the key design factors, including:

- Assembly strain control
- Accountability of thermal strains induced by the curing cycle
- Layup considerations for component design
- Metallic interface corrosion protection
- Drilling and machining
- Tooling for control of critical dimensions (built-up assemblies, fit tolerance on secondary bonds)
- Peel and flatwise tension limitations for cover-substructure interface joints

The demonstration tests will provide the necessary full-scale data to validate design philosophy, design allowables, design analysis methods, fabrication techniques, inspection methods and repair techniques, and thereby, provide the confidence needed to proceed with design and manufacture of a production wing.

CONCLUDING REMARKS

A plan has been defined for a composite wing development effort which will assist commercial transport manufacturers in reaching a level of technology readiness where the utilization of composite wing structure is a cost-competitive option for a new aircraft production program. The recommended development effort consists of two programs: a joint government-industry material development program, and a wing structure development program. The planned material development program will result in a improved composite material system that will lead to an efficient wing structure design. The wing structure development program will provide the technology and data needed: to produce a cost-competitive advanced composite wing structure, to provide Company management confidence to commit to production of such a structure, and to achieve certification of an aircraft employing such a structure.

The material development program is proposed as a joint effort between the three manufacturers, the material suppliers, and the Government. Because of its general applicability to the design of composite aircraft structure, it is suggested that this effort be funded as a separate program. The goal of the material development program is a graphite/epoxy material system with improved characteristics that will meet engineering and manufacturing requirements, and, at the same time, will not invalidate the existing graphite/epoxy data base and, thereby, impose drastic requalification requirements. The material development must include, as one of many requirements, consideration of modifications which will mitigate the electrical hazards problem associated with graphite fiber release in event of a fire. However, means must be found to reduce the electrical hazard without resorting to a completely new material system, or grossly degrading the material's processibility, mechanical performance and environmental durability.

The planned wing structure development program encompasses engineering and manufacturing analytical studies; manufacturing development; and development testing - to generate composite wing design data, to support concepts development, and for design verification. The program culminates in a manufacture and test demonstration of technology readiness using a representative (generic) wing box structure. The program objective is to develop and demonstrate the technology needed for design and manufacture of composite wing structure which will meet durability and damage tolerance requirements.

The scope and thrust of the wing development program is based on the belief that such a program should be designed to take each manufacturer as far as necessary towards developing the technology and data needed for production of composite wing structure, and reducing the associated risks to an acceptable level. It is not felt, however, that a company, and/or the Government, can afford to fully exercise, in advance, the manufacturing scale-up efforts associated with building a complete wing structure. These should, and must, be addressed in the normal Company-funded production program for the new aircraft. Such a production program would include the manufacture and test of two full-scale articles (a static test article, and a fatigue/damage growth test article), as well as a flight test article. It is believed that each of the major manufacturers will require similar composite wing development programs to achieve technology readiness at acceptable level of risk. At the same time, it is anticipated that each manufacturer's program will include some concept-peculiar aspects, reflecting differing philosophies, approaches, and operating procedures.

The timing of the recommended material development and wing structure development programs reflects the goal of achieving technology readiness for production of composite wing structures in time for the incorporation of such structure into the design of new aircraft in the 1985-1990 time frame. However, the current concern relative to the hazards of fiber release has resulted in uncertainty concerning the funding and timing of NASA's planned development effort. In order to minimize the impact of any major delay in program startup, early initiation of two long lead-time/high priority technology development efforts is urged. It is recommended that the development of a new, improved material systems be started immediately so as to provide a firm material base for the applications of composite primary wing structure. This material development effort should include the proposed efforts to alleviate the potential carbon fiber release hazard. It is also recommended that efforts be initiated in the near future to develop the data necessary to demonstrate the durability and damage tolerance characteristics of composite laminates when subjected to the wing design environment. These development efforts should include the definition of the wing design environment and the development of associated design criteria.

APPENDIX A

CONCEPTUAL DESIGN

The conceptual design of a reduced energy advanced transport aircraft (RE-1011) was conducted to provide the framework for identifying and investigating unique design aspects and problem areas in the use of composite materials in commercial aircraft wing structures. The aircraft incorporates many advanced technology features including a high aspect ratio wing with a supercritical airfoil shape, active controls, and composite materials in both primary and secondary structure of the wing. The design study was conducted in sufficient depth and detail to (1) provide insight into defining technology needs for design/analysis of highly loaded composite wings, (2) aid in the identification of needs for design concepts development and verification testing, and (3) define facility and equipment requirements.

The results of the conceptual design study are summarized in the following text, which includes: (1) a description of the baseline RE-1011 airplane, (2) an identification of the selected flight conditions and the corresponding net wing loads for these conditions, (3) a description of the detail analysis results of selected point design regions, (4) a narration of typical manufacturing breakdowns for the multi-spar and multi-rib structural arrangements, and (5) the identification and investigation of unique or significant design aspects associated with composite wing structure.

Baseline Airplane

The general arrangement of the baseline airplane (RE-1011) is shown on Figure 25. This configuration is an advanced technology transport which incorporates three advanced, mixed-flow, turbofan engines, a supercritical wing with a reduced leading-edge sweep, the use of composite material for both primary and secondary structure, and active controls. As noted on this figure, this airplane has a wing semispan of 28.74 m (94.3 ft) and a fuselage length of 70.0 m (229.7 ft).

CHARACTERISTICS	WING	HORIZONTAL TAIL	VERTICAL TAIL
AREA SQ. M. (SQ. FT.)	330.54 (3559)	71.54 (770.1)	44.51 (479.1)
ASPECT RATIO	10	5	1.6
SPAN M. (FT.)	57.49 (188.6)	18.93 (62.1)	8.12 (27.68)
ROOT CHORD M. (IN.)	8.85 (348.25)	5.82 (228.06)	8.12 (319.54)
TIP CHORD M. (IN.)	2.65 (104.47	1.74 (68.68)	2.43 (95.80)
TAPER RATIO	0.30	0.30	0.30
MAC M. (IN.)	6.31 (248.28)	4.15 (163.2)	5.72 (225.18)
SWEEP RAD., (DEG.)	0.524 (30)	0.524 (30)	0.611 (35)
T/C ROOT %	12	10	10
T/C TIP %	12	10	10

GROSS WEIGHT - 183977 KG (405592 LB M.)
POWER PLANT - ADVANCED MIXED FLOW TURBOFAN
INSTALLED THRUST - 154550 N (34746 LB. F.)
PASSENGERS - 400
RANGE - 3,000 N.M.
GEN. ARR. - 3,000 N.M.
400 PAX. ADV. TURBOFAN

2. DIMENSIONS IN METERS (FEET), OR NOTED

1. CADAM REF. DWG. CL1337-1-1, 1, 2, 3

NOTE

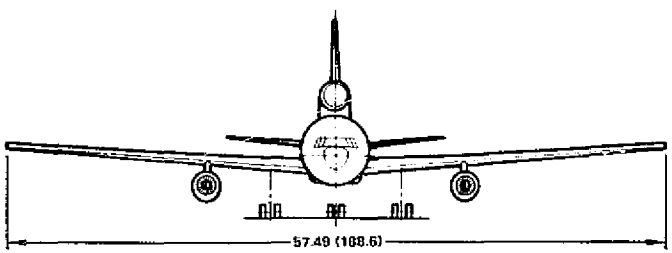

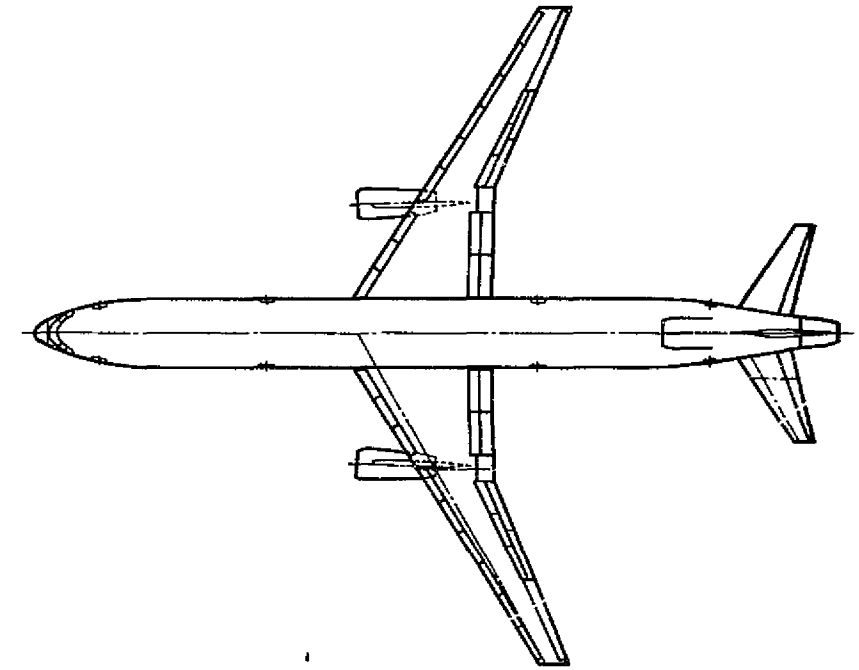

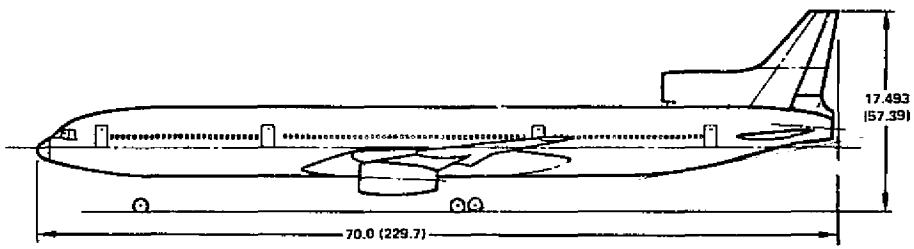

ORIGINAL PAGE IS
OF POOR QUALITY

Figure 25. General Arrangement - RE-1011 Advanced Technology Airplane

The baseline airplane has a 331 m^2 (3558 ft^2) wing area with a gross weight at takeoff of 183,970 kg (405,590 lbm). This configuration has a payload of 36,290 kg (80,000 lbm), equivalent to 400 passengers, and a range of 5,560 km (3000 nmi). Table 14 contains the airplane characteristics and, for comparison purposes, those of an equivalent payload L-1011-1 airplane. Note the approximate 1000 km (540 nmi) increment in range indicated for the advanced technology airplane.

An analysis of the center of gravity (c.g.) limits and corresponding tail size was conducted of the baseline configuration. This analysis revealed that for the supercritical wing with more negative C_{mo}, the c.g. range should be located aft to minimize trim drag. A suitable c.g. range for this airplane is 25-to 50-percent $\bar{c}$ for the horizontal tail shown in Figure 25. Assuming that the static margin requirement is relaxed to the neutral stability limit and active controls are employed, a tail volume coefficient of approximately 1.0 is adequate for the above c.g. range.

The masses assigned to the various components of the baseline airplane are listed in Table 15. The two largest structural mass items are the wing and body, which amounts to 19,650 kg (43,120 lbm) and 24,940 kg (54,990 lbm), respectively. This study is focused on the wing which represents 11-percent of the airplane takeoff weight. A more detailed weight statement of the wing is presented in Table 16 and indicates that 14,750 kg (32,530 lbm) is attributed to the wing structural box which is 75-percent of the total wing mass.

Design Conditions and Loads

A survey of design conditions for the L-1011 aircraft was used as a basis for selecting representative loading conditions for the study. In general, several types of loading conditions design the L-1011 wing at various locations. Included are positive and negative steady maneuvers, roll maneuvers, dynamic gust, dynamic taxi and ground handling maneuvers. The eventual use of advanced load alleviation techniques (i.e. maneuver load control, elastic mode suppression and gust alleviation) in conjunction with the aerodynamic characteristics of a supercritical airfoil, will undoubtedly change the type of critical design loading conditions for various regions

TABLE 14. AIRPLANE CHARACTERISTICS

AIRCRAFT MODEL	RE-1011	L-1011-1
WING AREA - m^2 (ft^2)	330.5 (3 558)	321.0 (3 456)
OVERALL LENGTH - m (ft)	70.0 (229.7)	54.2 (177.7)
WING SPAN - m (ft)	57.5 (188.6)	47.3 (155.3)
OVERALL HEIGHT - m (ft)	17.5 (57.4)	16.8 (55.3)
OPERATIONAL WEIGHTS - kg (lbm)		
MAXIMUM TAKEOFF	183 970 (405 590)	195 040 (430 000)
MAXIMUM ZERO FUEL	142 940 (315 130)	147 420 (325 000)
OPERATING EMPTY	106 650 (235 130)	109 040 (240 400)
PAYLOAD - kg (lbm)	36 290 (80 000)	36 290 (80 000)
ENGINE MODEL	ADVANCED MIXED-FLOW TURBOFAN	RB.211-22B
TAKEOFF THRUST - N (lbf)	154 560 (34 750)	186 820 (42 000)
RANGE - km (nmi)	5 560 (3 000)	4 520 (2 438)

TABLE 15. RE-1011 AIRPLANE GROUP WEIGHT STATEMENT

ITEM	MASS	
	(kg)	(lbm)
WING	19 558	43 118
TAIL	2 211	4 875
BODY	24 943	54 991
LANDING GEAR	7 800	17 196
SURFACE CONTROLS	1 951	4 301
NACELLE AND ENGINE SECTION	2 644	5 830
PROPULSION	13 254	29 219
AUXILIARY POWER UNIT	506	1 116
INSTRUMENTS	393	867
HYDRAULICS	1 099	2 423
ELECTRICAL	2 651	5 844
AVIONICS	998	2 200
FURNISHING AND EQUIPMENT	16 671	36 754
ENVIRONMENTAL CONTROL SYSTEM	3 484	7 682
DE-ICING SYSTEM	181	398
MAN. EMPTY WEIGHT (MEW)	98 345	216 814
STD. AND OPER. EQUIP.	8 307	18 314
OPERATING EMPTY WT. (OEW)	106 652	235 128
PAYLOAD	36 287	80 000
ZERO FUEL WEIGHT (ZFW)	142 939	315 128
FUEL	41 034	90 464
TAKEOFF WEIGHT	183 973	405 592

of the wing. However, it is believed that analysis of a few selected symmetric flight maneuvers provides adequate insight into the general load levels to be experienced by the composite wing.

The three maximum zero fuel weight conditions selected for the design effort are for an aircraft with a gross weight of 183,970 kg (405,590 lbm). The flight parameters associated with these conditions are:

(1) 2.5g positive symmetric maneuver at V_A, Mach 0.80, V_e = 186 m/s (284 kt)

(2) -1.0g negative symmetric maneuver at V_C, Mach 0.80, V_e = 186 m/s (284 kt)

(3) 2.5g positive symmetric maneuver at V_D, Mach 0.95, V_e = 212 m/s (412 kt)

The wing airloads for these conditions were generated based on aerodynamic section coefficient data obtained by using the Jameson-Caughey NYU Transonic Swept Wing Computer Program - FLO22 (Reference 3). Ten degrees per g of outboard aileron was used for maneuver load control to redistribute a portion of the airload from the outer region to the inner wing. Flexibility effects were included in the composite wing loads analysis based on L-1011 aeroelastic deformation data. Wing weights were generated by assuming the same empty wing weight distribution as the L-1011 wing and ratioing to account for geometry differences. The wing lift was increased by an increment equal to the balancing tail load for the most forward center of gravity limit. Although relaxed stability through use of active controls permits an aft shift in airplane c.g. range, the tail load is still quite large due to the pitching moment characteristics of a supercritical airfoil.

The net wing loads for the selected conditions are shown in Figures 26 through 28. These figures present the shears, bending moments, and torsional moments about a reference axis approximating the rear beam of the wing.

Analysis Results

In order to provide a framework for identifying some of the specific design aspects and problem areas, limited point design studies were undertaken. In general, these studies concentrated on the multi-rib structural arrangement (comparable to the

TABLE 16. RE-1011 WING WEIGHT STATEMENT

ITEM	MASS	
	(kg)	(lbm)
SURFACES	11 903	26 241
SHEAR MATERIAL	1 224	2 699
RIBS	1 544	3 403
MLG SUPPORT	83	183
WING STRUCTURAL BOX	14 754	32 526
SECONDARY STRUCTURE	4 804	10 592
TOTAL WING	19 558	43 118

ORIGINAL PAGE IS
OF POOR QUALITY

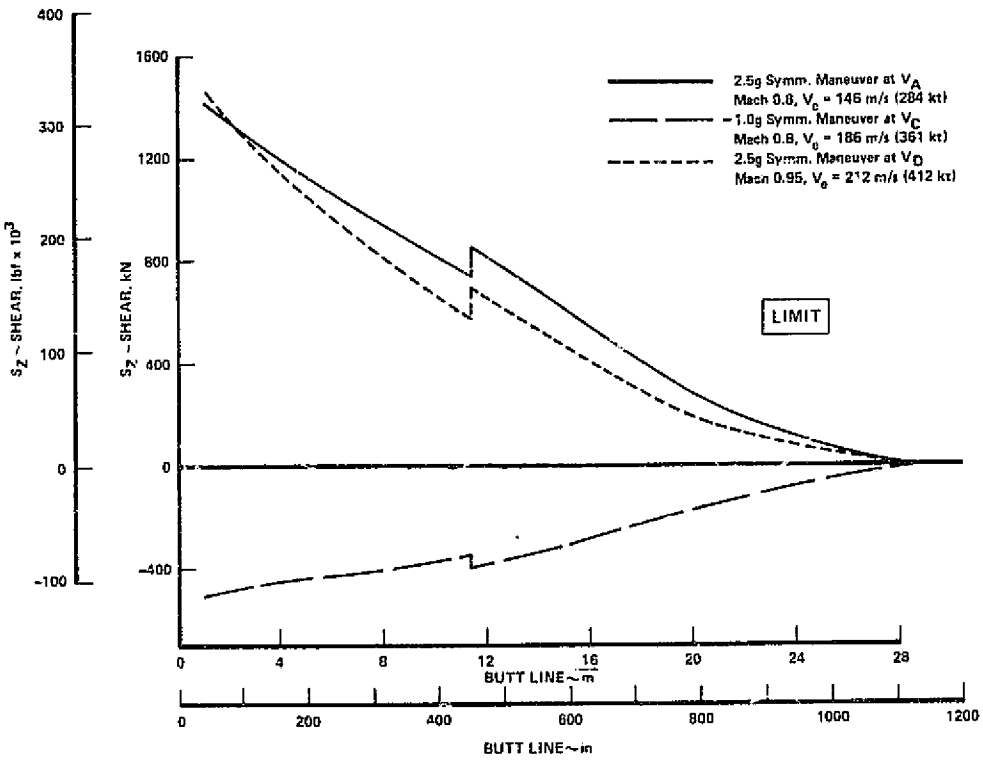

Figure 26. Design Wing Shears

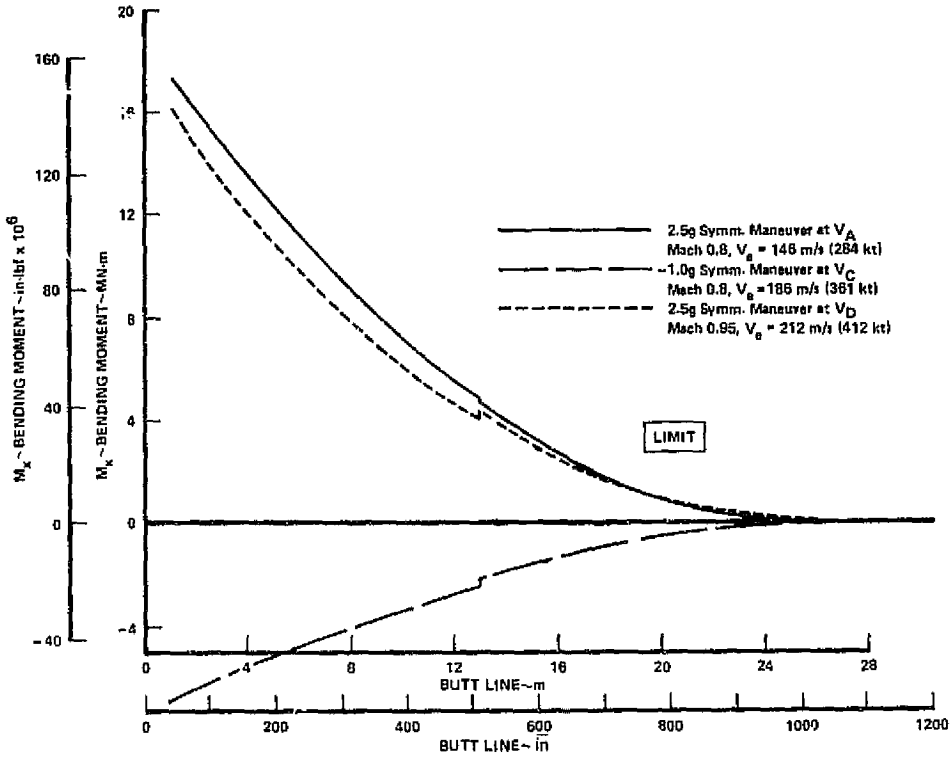

Figure 27. Design Wing Bending Moments

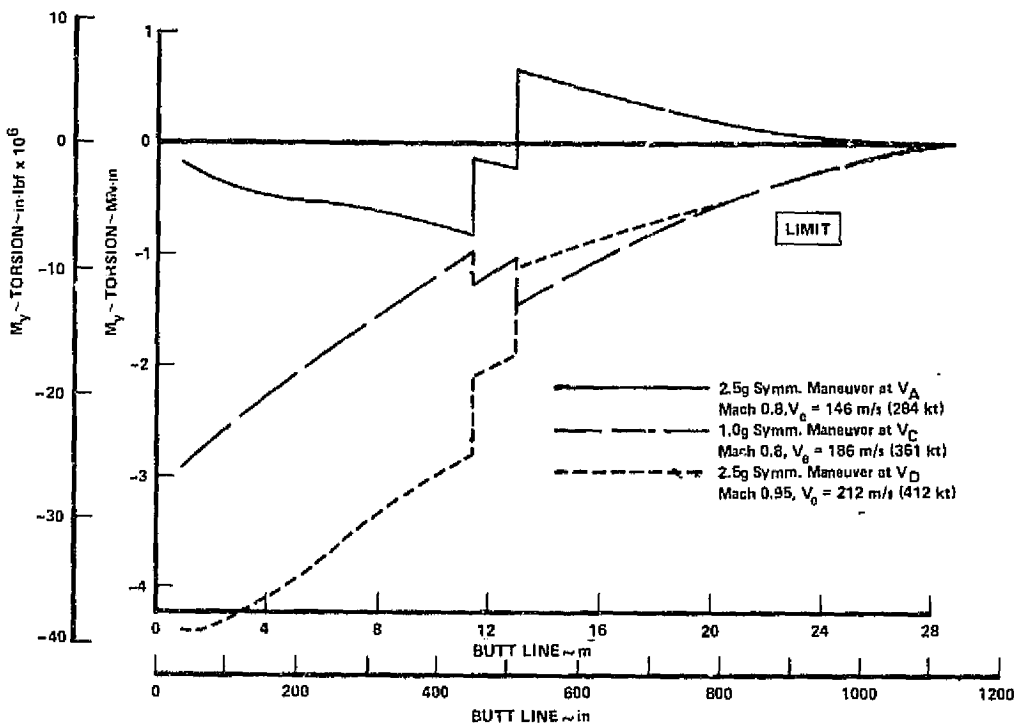

Figure 28. Design Wing Torsional Moments About Rear Beam

ORIGINAL PAGE IS
OF POOR QUALITY

current L-1011 design) and investigated several representative panel concepts: hat-stiffened and blade-stiffened surface panels for the upper and lower surfaces, respectively. The wing net loads were used to define surface load intensities (axial and shear). At selected locations on the wing, point design studies of the panel concepts were performed to determine representative sizes and configurations, and to identify feasible fabrication approaches. From these studies, design features such as representative skin laminate and stringer arrangements were defined.

The surface panel loads were defined at selective spanwise locations on the wing and used as the basis for the detail structural evaluation of the candidate concepts. Figure 29 presents a series of sketches which describe the location, and physical dimensions of the wing box cross sections used for defining the surface panel loads. Note the nonlinearity in the width of the structural box due to the kick in the rear beam at OWS 0.0. The surface panel loads were defined for the specified design conditions using a computer program which calculates the internal loads of a single cell box with variable elastic properties. The average surface load intensities resulting from this analysis are displayed in Figures 30 and 31. The average upper surface load intensities are presented in Figure 30 for both the maximum tension and compression conditions. The shear flows associated with these conditions are also specified. A maximum axial compressive force of 3.2 MN/m (20,000 lbf/in) is noted at OWS 0.0, where the kick in the rear beam occurs. The corresponding load intensities for the lower wing surface are shown in Figure 31 and indicate a maximum tensile force of 4.2 MN/m (23,900 lbf/in) occurring at OWS 0.0.

Using the maximum combination of loads (axial and shear) on a given surface, the load environment was defined at three point design regions. Table 17 summarizes the internal load environment at these selected regions. In addition, this table presents an approximation of the torsional (Gt_s) and extensional ($E\bar{t}$) stiffness requirements of the individual surfaces which were based on design data from the L-1011 airplane.

In order to perform the detail stress analysis of the candidate concepts, an amplification of certain aspects of the design criteria reported in Appendix D was

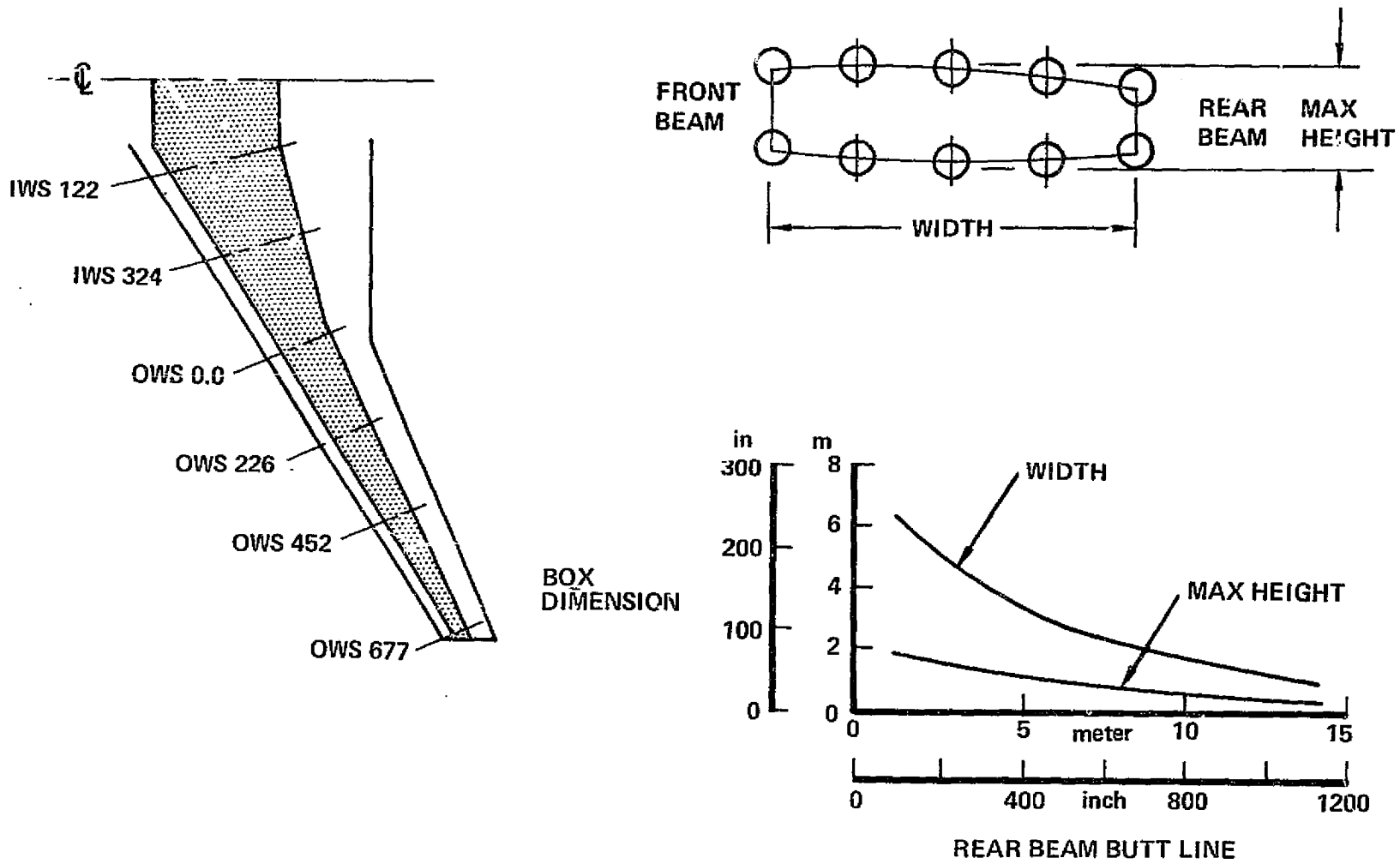

Figure 29. Structural Box Geometry

ORIGINAL PAGE IS
OF POOR QUALITY

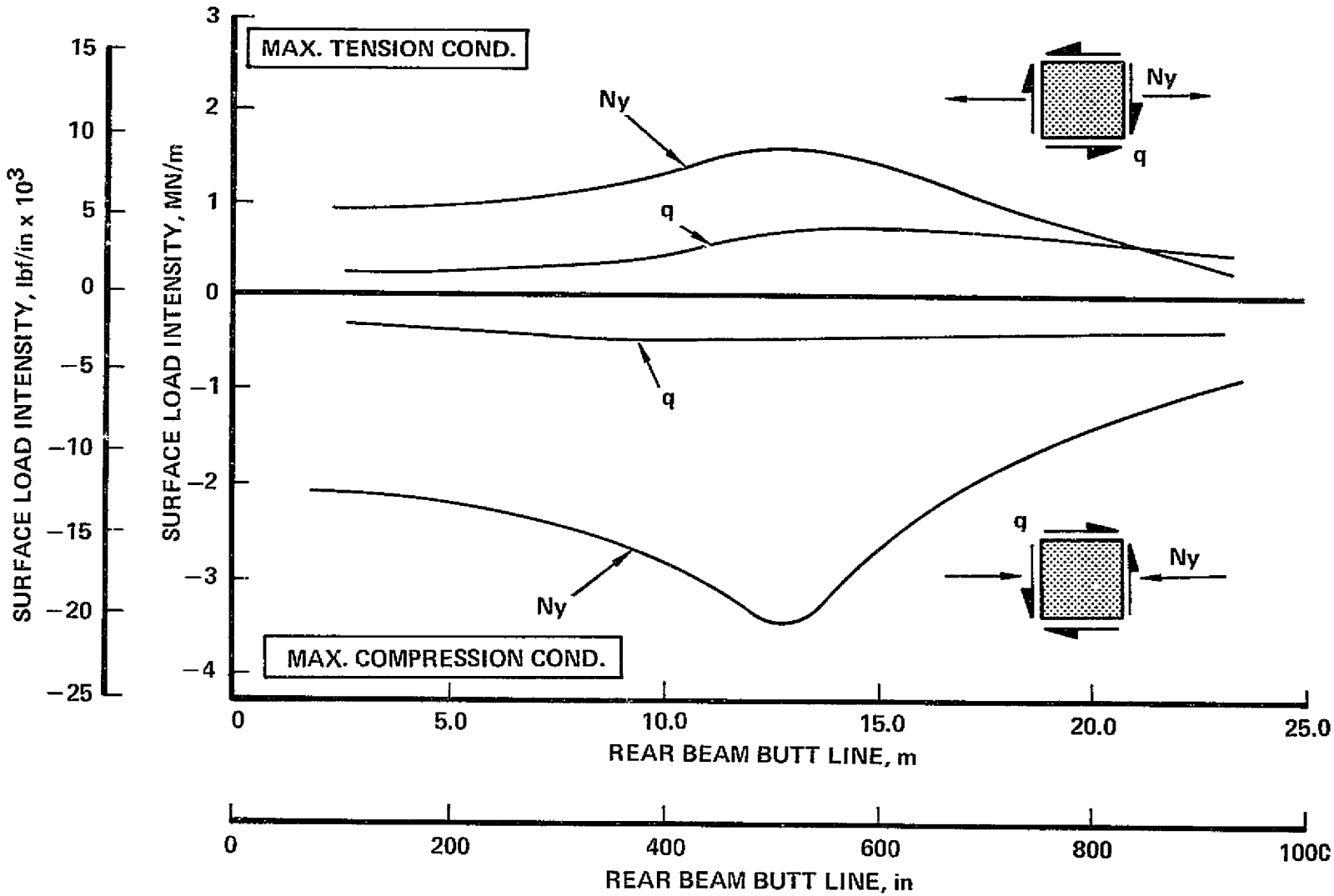

ORIGINAL PAGE IS
OF POOR QUALITY

Figure 30. Wing Upper Surface Load Intensities

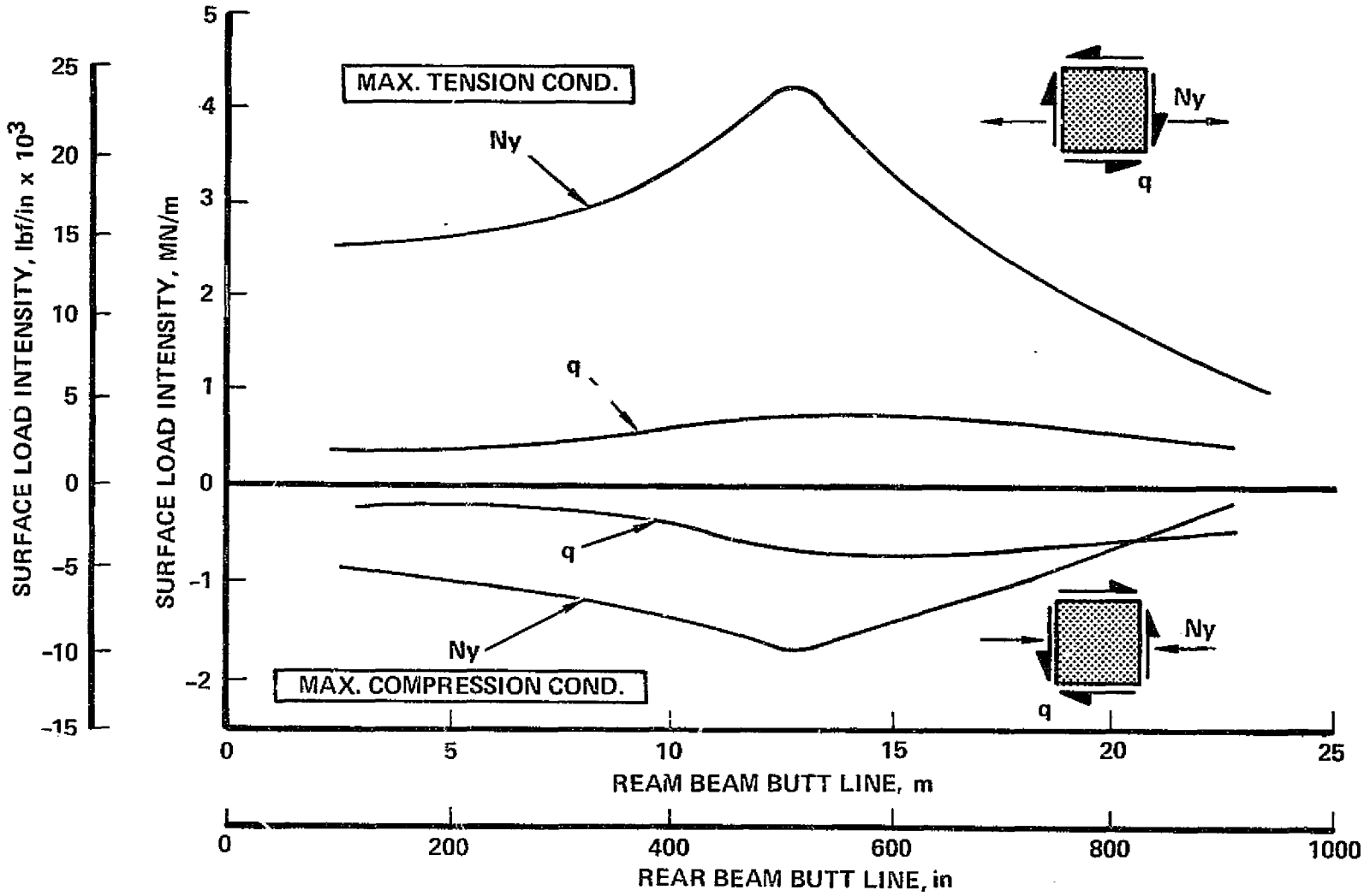

Figure 31. Wing Lower Surface Load Intensities

ORIGINAL PAGE IS
OF POOR QUALITY

TABLE 17. WING SURFACE LOAD ENVIRONMENT AND STIFFNESS REQUIREMENTS

DESIGN DATA	IWS 122		OWS 0.0		OWS 452	
	UPPER	LOWER	UPPER	LOWER	UPPER	LOWER
LOAD INTENSITIES						
MAX. TENSION LOADS						
N_y, kN/m	1086	2434	1856	4186	315	1261
N_{xy}, kN/m	385	595	963	1086	595	420
MAX. COMPRESSION LOADS						
N_y, kN/m	-2592	-1016	-4133	-1874	-1243	-315
N_{xy}, kN/m	595	438	893	1068	438	648
STIFFNESS REQUIREMENTS						
Gt_s, GN/m	0.28	0.32	0.18	0.21	0.06	0.10
Et, GN/m	0.84	0.94	0.52	0.63	0.17	0.29

DESIGN DATA	IWS 122		OWS 0.0		OWS 452	
	UPPER	LOWER	UPPER	LOWER	UPPER	LOWER
LOAD INTENSITIES						
MAX. TENSION LOADS						
N_y, lbf/in	6200	13900	10600	23900	1800	7200
N_{xy}, lbf/in	2200	3400	5500	6200	3400	2400
MAX. COMPRESSION LOADS						
N_y, lbf/in	-14800	-5800	-23600	-10700	-7100	-1800
N_{xy}, lbf/in	3400	2500	5100	6100	2500	3700
STIFFNESS REQUIREMENTS						
Gt_s, lbf/in X 10^6	1.6	1.8	1.0	1.2	0.32	0.55
Et, lbf/in X 10^6	4.8	5.4	3.0	3.6	0.96	1.65

required. The major elements of these postulated study criteria are summarized in Table 18 with a brief discussion of the more important aspects, design material properties and the fatigue amd damage tolerance criteria, presented in the following text.

The T300/5208 graphite/epoxy material system was premised for this composite wing design study. Table 19 presents the design properties for this material which represent the best estimate of conservative design properties from currently available test data. These allowables were used in a laminate strength characterization program entitled HYBRID (Reference 4) to predict laminate strengths which have a 90-percent probability of exceedance with a 95-percent confidence level. The number of specimens and batches is limited. However, these properties are defined as "B basis" even though it is not possible to meet all the requirements of MIL-HDBK-5 at this time.

This table contains preliminary design input properties for T300/5208 at room temperature dry (RTD); at 355 K (180°F) with 1-percent absorbed moisture (180W); and at 219 K (-65°F), dry (-65D). Where possible the values are based upon tabulated test results, and are supplemented or compared with qualification and acceptance data. These data are for laminae with fiber volume ranging from 62- to 67-percent.

The moduli are average values and the Poisson ratio is the average of tension and compression values. The coefficients of thermal expansion were determined by extrapolating available data at 366 K (200°F) to 450 K (350°F). Then the average coefficient was calculated from the reference temperature to 450 K (350°F). The "B" basis strength was calculated, and the design strains were determined from a typical stress-strain curve.

For fatigue and damage tolerance considerations, the design requirements were met by limiting the permissible design strain levels for the static ultimate and normal operation conditions. Design strain levels of graphite epoxy structures are currently restricted by many considerations including stress concentrations associated with cutouts, joints and splices; by tolerance for impact damage; by transverse cracking in the 90-degree fiber-oriented plies; and in wing structures, by compatibility with permissible compression strains. Currently, these considerations restrict design ultimate strains to approximately 50-percent of the composite material failure strain or about 4,500 to 5,000 μcm/cm and practical working strain levels to between 3,000 to 3,500 μcm/cm. At these design strain levels, defects do not appear to propagate significantly under operational cyclic loadings and environment.

TABLE 18. STUDY CRITERIA FOR CONCEPTUAL DESIGN

MATERIAL SYSTEM:	T300/5208 GRAPHITE EPOXY
LOADING:	COMBINED AXIAL AND SHEAR LOADS
FATIGUE AND DAMAGE TOLERANCE:	RESTRICT THE MAXIMUM UNIDIRECTIONAL STRAIN OF ANY LAMINAE UNDER COMBINED LOADS TO A DESIGN LEVEL OF 4500-5000 μcm/cm (μin/in) ULTIMATE.
STRENGTH:	COMBINED ULTIMATE STRESSES WILL NOT EXCEED THE LAMINATE STRENGTH OR THE ABOVE LAMINAE STRAIN CRITERIA.
BUCKLING:	NO GENERAL OR LOCAL INSTABILITY FAILURES AT ULTIMATE LOADS.

TABLE 19. PRELIMINARY INPUT MATERIAL PROPERTIES FOR HYBRID COMPUTER PROGRAM

	DIRECTION, TYPE OF PROPERTY	SYMBOL	UNITS	T300/5208	T300/5208	T300/5208
		TEMPERATURE		RTD "B" BASIS (3)	180W "B" BASIS (3)	-65D "B" BASIS (3)
EXTENSIONAL MODULI	L, INITIAL TENSILE	EA1(M,1,1)	GPa	148.9	148.9	146.2
	L, INITIAL COMPRES.	EA1(M,1,2)	GPa	128.2	124.1	137.9
	L, SECOND TENSILE	EA1(M,2,1)	GPa	148.9	148.9	148.9
	L, SECOND COMPRES.	EA1(M,2,2)	GPa	99.28	113.1	114.4
	T, INITIAL TENSILE	EB1(M,1,1)	GPa	11.03	9.653	12.27
	T, INITIAL COMPRES.	EB1(M,1,2)	GPa	10.76	9.377	12.07
	T, SECOND TENSILE	EB1(M,2,1)	GPa	11.03	9.653	12.27
	T, SECOND COMPRES.	EB1(M,2,2)	GPa	9.791	6.619	11.24
SHEAR MOD.	LT, INITIAL SHEAR	G1(M,1)	GPa	5.516	4.137	5.930
	LT, SECOND SHEAR	G1(M,2)	GPa	2.068	0.621	4.206
	LT, MAJOR POISSON'S	MU (M)	—	.30	.31	.33
THERM EXP.	L, COEF. OF EXP.	ALA(M,1)	μm/m/K	.43	.50	.36
	T, COEF. OF EXP.	ALA(M,2)	μm/m/K	29.2	33.8	27.2
STRAINS — TENSILE	L, YIELD TENSILE	EPT(M,1,1)	m cm/cm	8.5 (1269)	7.8 (1158)	6.1 (889)
	T, YIELD TENSILE	EPT(M,1,2)	m cm/cm	3.6 (39.7)	3.0 (28.9)	4.2 (51.7)
	L, ULTIMATE TENSILE	EPT(M,2,1)	m cm/cm	8.5 (1269)	7.8 (1158)	6.1 (889)
	T, ULTIMATE TENSILE	EPT(M,2,2)	m cm/cm	3.6 (39.7)	3.0 (28.9)	4.2 (51.7)
STRAINS — COMPR.	L, YIELD COMPRES.	EPC(M,1,1)	m cm/cm	5.4 (689)	5.0 (621)	4.0 (552)
	T, YIELD COMPRES.	EPC(M,1,2)	m cm/cm	8.0 (86.2)	8.0 (75.2)	10.0 (120.7)
	L, ULTIMATE COMPRES.	EPC(M,2,1)	m cm/cm	10.6 (1207)	9.7 (1151)	9.8 (1214)
	T, ULTIMATE COMPRES.	EPC(M,2,2)	m cm/cm	15.0 (154)	13.0 (108)	14.0 (165)
STRAINS — SHEAR	LT, YIELD SHEAR	EPS(M,1)	m cm/cm	10.0 (55)	10.0 (41)	8.6 (51)
	LT, ULTIMATE SHEAR	EPS(M,2)	m cm/cm	23.0 (82.1)	44.0 (62)	14.5 (76)
AUXILIARY DATA	FIBER VOLUME		%	62-67	62-67	62-67
	DENSITY		kg/m^3	1.605	1.605	1.605
	PLY THICKNESS		cm	.013	.013	.013

NOTES: (1) VALUES IN PARENTHESIS ARE STRENGTHS IN GPa.
(2) COEFFICIENTS OF EXPANSION ARE EXTRAPOLATED AVERAGES FROM THE REFERENCE TEMPERATURE TO 450K.
(3) WHERE STATISTICAL BASE IS LIMITED, MINIMUM PROPERTIES ARE ESTIMATED.

	DIRECTION, TYPE OF PROPERTY	SYMBOL	UNITS	T300/5208	T300/5208	T300/5208
		TEMPERATURE		RTD "B" BASIS (3)	180W "B" BASIS (3)	-65D "B" BASIS (3)
EXTENSIONAL MODULI	L, INITIAL TENSILE	EA1(M,1,1)	psi	21 600 000	21 600 000	21 200 000
	L, INITIAL COMPRES.	EA1(M,1,2)	psi	18 600 000	18 000 000	20 000 000
	L, SECOND TENSILE	EA1(M,2,1)	psi	21 600 000	21 600 000	21 200 000
	L, SECOND COMPRES.	EA1(M,2,2)	psi	14 400 000	16 400 000	16 600 000
	T, INITIAL TENSILE	EB1(M,1,1)	psi	1 600 000	1 400 000	1 780 000
	T, INITIAL COMPRES.	EB1(M,1,2)	psi	1 560 000	1 360 000	1 750 000
	T, SECOND TENSILE	EB1(M,2,1)	psi	1 600 000	1 400 000	1 780 000
	T, SECOND COMPRES.	EB1(M,2,2)	psi	1 420 000	960 000	1 630 000
SHEAR MOD.	LT, INITIAL SHEAR	G1(M,1)	psi	800 000	600 000	860 000
	LT, SECOND SHEAR	G1(M,2)	psi	300 000	90 000	610 000
	LT, MAJOR POISSON'S	MU (M)		.30	.31	.33
THERM EXP.	L, COEF. OF EXP.	ALA(M,1)	10^{-6} in/in/°F	.24	.28	.20
	T, COEF. OF EXP.	ALA(M,2)		16.2	18.0	15.1
STRAINS — TENSILE	L, YIELD TENSILE	EPT(M,1,1)	10^{-3} in/in	8.5 (184)	7.8 (168)	6.1 (129)
	T, YIELD TENSILE	EPT(M,1,2)	10^{-3} in/in	3.6 (5.76)	3.0 (4.2)	4.2 (7.5)
	L, ULTIMATE TENSILE	EPT(M,2,1)	10^{-3} in/in	8.5 (184)	7.8 (168)	6.1 (129)
	T, ULTIMATE TENSILE	EPT(M,2,2)	10^{-3} in/in	3.6 (5.76)	3.0 (4.2)	4.2 (7.5)
STRAINS — COMPR.	L, YIELD COMPRES.	EPC(M,1,1)	10^{-3} in/in	5.4 (100)	5.0 (90)	4.0 (80)
	T, YIELD COMPRES.	EPC(M,1,2)	10^{-3} in/in	8.0 (12.5)	8.0 (10.9)	10.0 (17.5)
	L, ULTIMATE COMPRES.	EPC(M,2,1)	10^{-3} in/in	10.6 (175)	9.7 (167)	9.8 (176)
	T, ULTIMATE COMPRES.	EPC(M,2,2)	10^{-3} in/in	15.0 (22.4)	13.0 (15.7)	14.0 (24)
STRAINS — SHEAR	LT, YIELD SHEAR	EPS(M,1)	10^{-3} in/in	10.0 (8)	10 (6)	8.6 (7.4)
	LT, ULTIMATE SHEAR	EPS(M,2)	10^{-3} in/in	23.0 (11.9)	44 (9)	14.5 (11)
AUXILIARY DATA	FIBER VOLUME		%	62-67	62-67	62-67
	DENSITY		lbs/in^3	.058	.058	.058
	PLY THICKNESS		in	.005	.005	.005

NOTES: (1) VALUES IN PARENTHESIS ARE STRENGTHS IN ksi.
(2) COEFFICIENTS OF EXPANSION ARE EXTRAPOLATED AVERAGES FROM THE REFERENCE TEMPERATURE TO 350°F.
(3) WHERE STATISTICAL BASE IS LIMITED, MINIMUM PROPERTIES ARE ESTIMATED.

ORIGINAL PAGE IS OF POOR QUALITY

A preliminary study was undertaken to investigate the mass trend associated with varying the configuration of the wing surface panels. The unstiffened skin, hat-stiffened and blade-stiffened panel configurations were the candidate concepts included in this investigation which was conducted at the upper wing surface of IWS 122. A summary of the results of this analysis is presented in Table 20 and contains a description of the load intensities, rib or spar spacing and the equivalent flat plate thickness (area/pitch) for each configuration. The corresponding cross-sectional dimensions and the general class of the material layup for the structural elements are defined in Figure 32. It is noted that the layups are grouped as a general family of cross-plied laminates ($\pm 45_i/90_j/0_k/90_j/\pm 45_i$). Stacking sequence optimization was not attempted.

These results indicate that the blade-and hat-stiffened concepts are appreciably lighter than the unstiffened panel configuration, i.e., both stiffened concepts are approximately 50-percent lighter than the unstiffened concept. Care should be exercised in interpreting these results since no attempt was made to optimize the rib or spar spacing or to include the effect of substructure weight. However, this limited trend study did provide some guidance in the decision to concentrate any further analytical studies on the stiffened skin concepts, i.e., the blade- and hat-stiffened concepts.

Using these concepts and the T300/5208 graphite/epoxy material system, a more comprehensive point design analysis was conducted on the upper and lower surfaces at three wing stations (IWS 122, OWS 0.0 and OWS 452). The location of these stations and their corresponding load environment were previously shown in Figure 20 and Table 17, respectively.

Basically, a series of three computer programs were used for the structural analysis of the blade- and hat-stiffened concepts; these programs and their general use are as follows: (1) the 'HYBRID' program (Reference 4) to characterize the strength and elastic properties of the material, (2) the minimum weight synthesis programs 'BLADE' and 'HAT' (Reference 5), and (3) the general purpose buckling program 'VIPASA' (Reference 6 and 7) to verify the structural adequacy of the final designs.

Analyses of the blade-stiffened panel configurations were conducted for a variety of stringer spacing; but all designs were constrained to a 76.2 cm (30.0 in) rib spacing. The resulting upper and lower panel thicknesses for this stringer spacing study are shown in Figure 33. Typical panel cross sectional data for the

TABLE 20. PRELIMINARY DESIGN DATA FOR UPPER SURFACE PANELS AT IWS 122

STRUCTURAL ARRANGEMENT	MULTI-SPAR	MULTI-RIB	MULTI-RIB
SURFACE	UPPER	UPPER	UPPER
CONCEPT	UNSTIFFENED SKIN	HAT-STIFFENED	BLADE-STIFFENED
LOAD INTENSITIES			
MAXIMUM TENSION COND			
N_y, kN/m (lbf/in)	1086 (6200)	1086 (6200)	1086 (6200)
N_{xy}, kN/m (lbf/in)	385 (2200)	385 (2200)	385 (2200)
MAXIMUM COMPRESSION COND			
N_y, kN/m (lbf/in)	-2592 (-14800)	-2592 (-14800)	-2592 (-14800)
N_{xy}, kN/m (lbf/in)	595 (3400)	595 (3400)	595 (3400)
SPAR/RIB SPACING m(in)	1.42 (56.0)	0.76 (30.0)	0.76 (30.0)
EQUIVALENT THICK. cm^2/cm (in^2/in)(1)	2.84 (1.12)	1.37 (0.54)	1.35 (0.53)

(1) EQUIVALENT THICKNESS ($\bar{t}$) = AREA/PITCH

ORIGINAL PAGE IS
OF POOR QUALITY

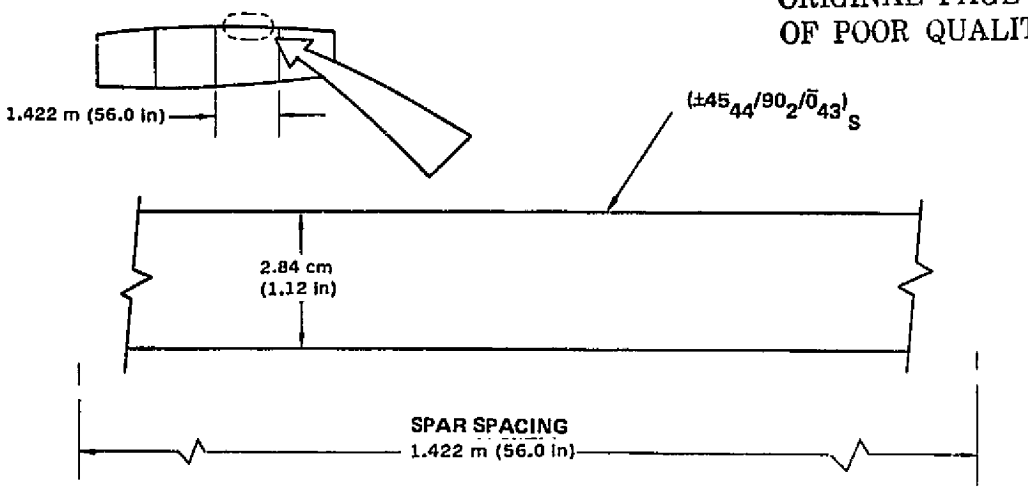

(A) UNSTIFFENED CONCEPT, MULTI-SPAR ARRANGEMENT

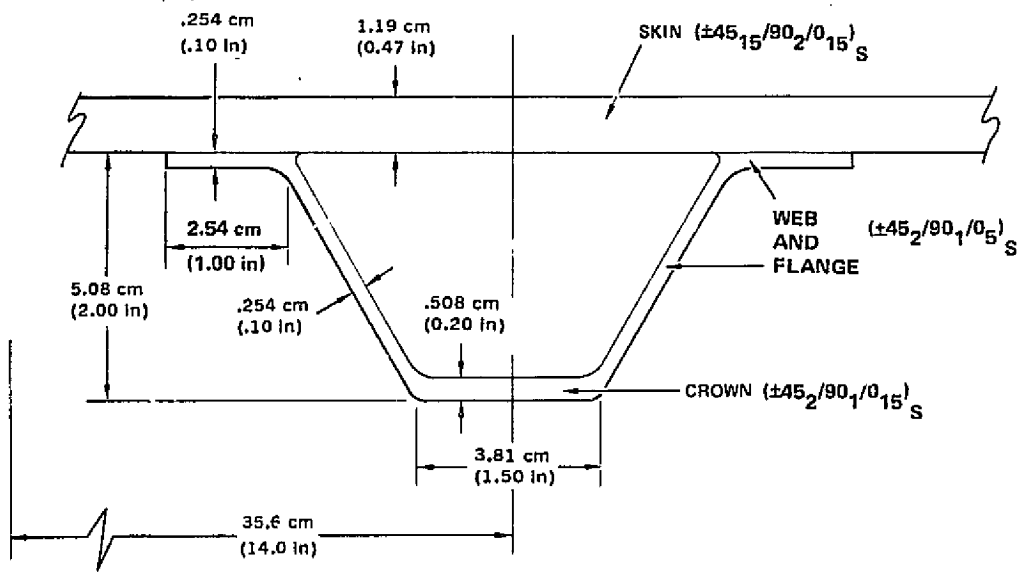

(B) HAT-STIFFENED CONCEPT, MULTI-RIB ARRANGEMENT

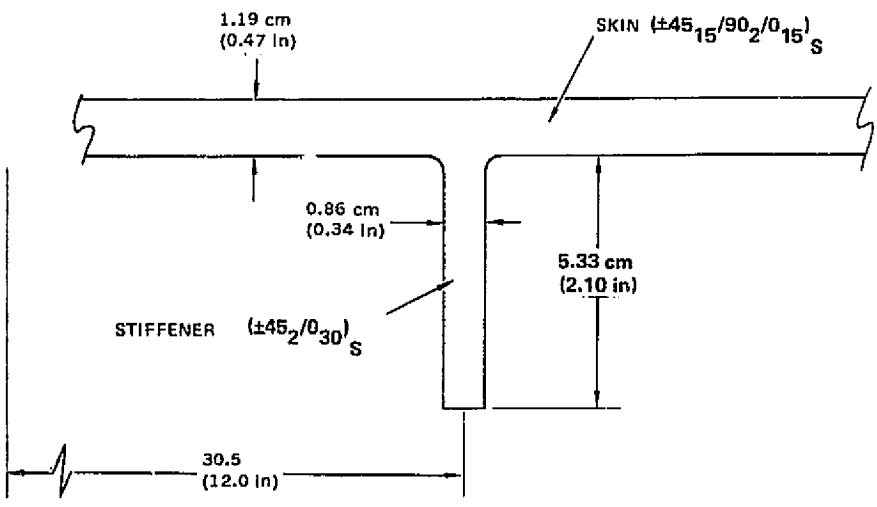

(C) BLADE-STIFFENED CONCEPT, MULTI-RIB ARRANGEMENT

Figure 32. Preliminary Upper Surface Panel Design Data at IWS 122

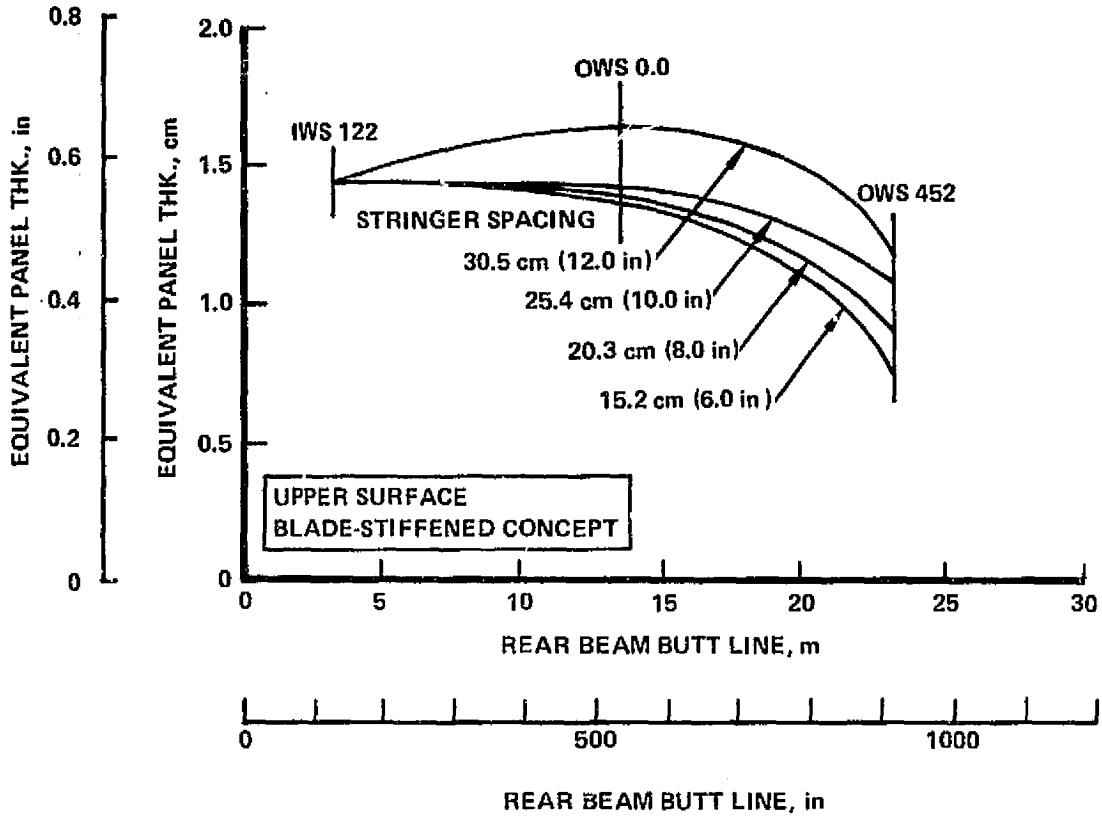

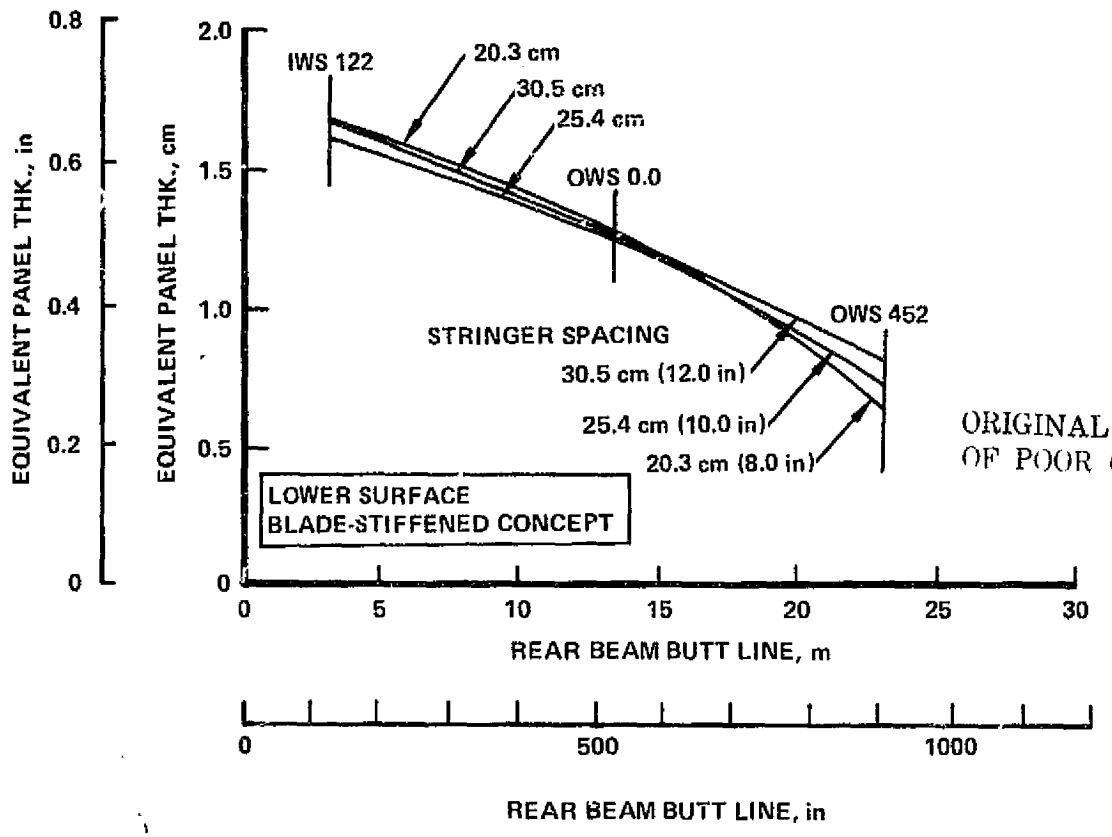

ORIGINAL PAGE IS
OF POOR QUALITY

Figure 33. Variation in Panel Thickness with Stringer Spacing, Blade-Stiffened Concept

20.3 cm (8.0 in) stringer spacing designs are shown in Figure 34. Skin thicknesses vary from approximately 1.27 cm (0.50 in) to 0.635 cm (0.25 in) for the inboard and outboard wing stations respectively. The corresponding thicknesses for the blades are 1.15 cm (0.45 in) to 0.41 cm (0.16 in), respectively.

An example of the type of design data resulting from the analysis of the blade-stiffened concept is shown in Table 21. These data reflect the 20.3 cm (8.0 in) stiffener spacing design for the wing upper surface at the three point design regions. Applied loads/strains and the corresponding allowables values for the complete cross section and the individual structural elements are presented. In addition, the stiffnesses and equivalent thickness of each panel are included in this table.

Using representative thickness data defined from the detail panel analysis, typical wing bending (EI) and torsional (GJ) stiffness data were calculated and are presented in Figure 35. The corresponding wing stiffness data for the L-1011-1 airplane are included on this figure for comparison purposes.

The hat-stiffened panel configuration was subjected to point design analysis in a manner similar in scope to that conducted on the blade-stiffened panel configuration. The T300/5208 graphite/epoxy material system was also premised for these designs with the analyses being conducted on the upper and lower panels at the three point design regions.

Panel configurations were defined at each point design region for stiffener spacings of 20.3 cm (8.0 in), 25.4 cm (10.0 in) and 30.5 cm (12.0 in). These results are presented in Figure 36 which displays the panel equivalent thickness as a function of wing span (defined by the rear beam butt line) for each stringer spacing. The upper plot of this figure presents the data for the upper surface panels. In general, the designs with 20.3 cm (8.0 in) stringer spacing design display the smallest thicknesses (i.e., least weight) at each of the three point design regions, the exception being those at IWS 122. At IWS 122 all designs have approximately the same thickness. For the lower surface panels, an insignificant variation in thickness is noted when the stringer spacing is varied.

Typical panel cross sectional data that reflect the 20.3 cm (8.0 in) spacing designs are shown in Figure 37 for the hat-stiffened configuration. This figure presents the thickness and width of each structural element of the cross section and includes the general class of layup for each laminate. A summary

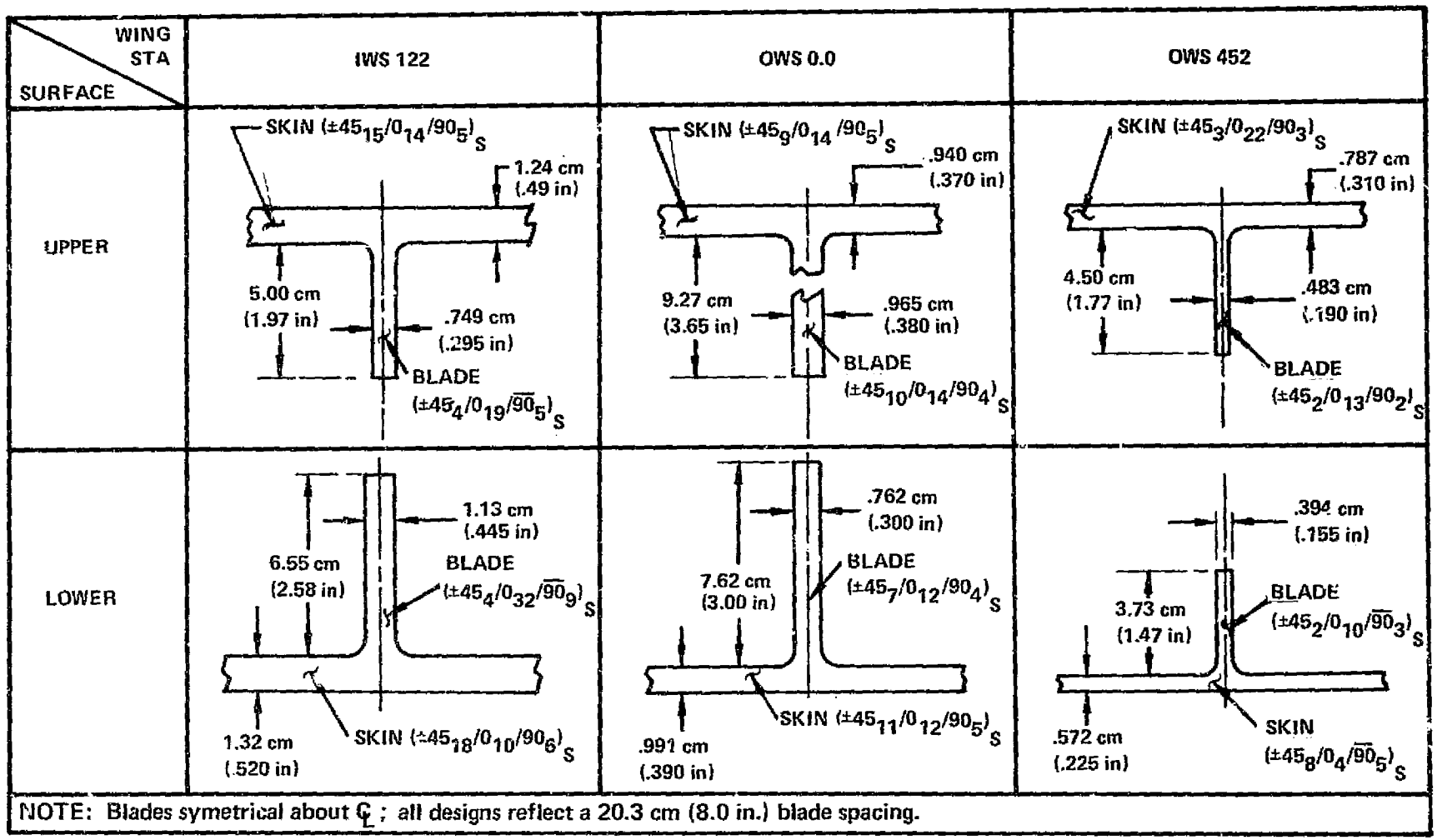

NOTE: Blades symetrical about ℄ ; all designs reflect a 20.3 cm (8.0 in.) blade spacing.

Figure 34. Cross-Sectional Data for Blade-Stiffened Panel Configuration

ORIGINAL PAGE IS
OF POOR QUALITY

TABLE 21. SUMMARY OF DESIGN DATA FOR UPPER SURFACE PANELS - BLADE-STIFFENED CONFIGURATION

ITEM	LOAD INTENSITIES (kN/m)					
	IWS 122		OWS 0.0		OWS 452	
APPLIED LOADS						
COMPRESSION						
AXIAL LOAD, N_x	-2592		-4133		-1245	
SHEAR LOAD, N_{xy}	595		886		443	
TENSION						
AXIAL LOAD, N_x	1086		1862		312	
SHEAR LOAD, N_{xy}	385		958		597	
GENERAL INSTABILITY	APPLIED	ALLOWABLE	APPLIED	ALLOWABLE	APPLIED	ALLOWABLE
AXIAL LOAD, N_x	-2592	-2974	-4133	-11061	-1245	-1245
SHEAR LOAD, N_{xy}	595	595	886	886	443	443
SKIN STRENGTH/BUCKLING	APPLIED	ALLOWABLE	APPLIED	ALLOWABLE	APPLIED	ALLOWABLE
COMPRESSIVE STRENGTH						
AXIAL LOAD, N_x	-2261	-3382	-2946	-3019	-1223	-1975
SHEAR LOAD, N_{xy}	595	891	886	908	443	715
TENSILE STRENGTH						
AXIAL LOAD, N_x	865	3758	1277	2112	275	4017
SHEAR LOAD, N_{xy}	385	1674	958	1585	597	HIGH
BUCKLING (LOCAL)						
AXIAL LOAD, N_x	-2261	-8208	-2946	-3294	-1223	-1290
SHEAR LOAD, N_{xy}	595	2161	886	991	443	468
BLADE STRENGTH/BUCKLING	APPLIED	ALLOWABLE	APPLIED	ALLOWABLE	APPLIED	ALLOWABLE
COMPRESSIVE STRENGTH						
AXIAL LOAD, N_x	-2499	-3436	-3042	-3047	-900	-2310
TENSILE STRENGTH						
AXIAL LOAD, N_x	898	3921	1282	3394	165	2639
BUCKLING (LOCAL)						
AXIAL LOAD, N_x	-2499	-3842	-3042	-3240	-900	-1113
STIFFNESS DATA						
TORSIONAL (Gt_s), GN/m	280.0		175.0		85.8	
BENDING ($E\bar{t}$), GN/m	841.0		876.0		876.0	
EXTENSIONAL (EA), GN	171.0		179.0		178.0	
PANEL EQUIVALENT THK ($\bar{t}$)cm	1.43		1.38		0.894	

1. BLADE SPACING = 20.3 cm

ITEM	LOAD INTENSITIES (lbf/in)					
	IWS 122		OWS 0.0		OWS 452	
APPLIED LOADS						
COMPRESSION						
AXIAL LOAD, N_x	-14800		-23600		-7110	
SHEAR LOAD, N_{xy}	3400		5060		2530	
TENSION						
AXIAL LOAD, N_x	6200		10630		1780	
SHEAR LOAD, N_{xy}	2200		5470		3410	
GENERAL INSTABILITY	APPLIED	ALLOWABLE	APPLIED	ALLOWABLE	APPLIED	ALLOWABLE
AXIAL LOAD, N_x	-14800	-16980	-23600	-63160	-7110	-7110
SHEAR LOAD, N_{xy}	3400	3400	5060	5060	2530	2530
SKIN STRENGTH/BUCKLING	APPLIED	ALLOWABLE	APPLIED	ALLOWABLE	APPLIED	ALLOWABLE
COMPRESSIVE STRENGTH						
AXIAL, N_x	-12910	-19310	-16820	-17240	-6985	-11280
SHEAR, N_{xy}	3400	5085	5060	5185	2530	4085
TENSILE STRENGTH						
AXIAL, N_x	4940	21460	7290	12060	1570	22940
SHEAR, N_{xy}	2200	9560	5470	9050	3410	HIGH
BUCKLING (LOCAL)						
AXIAL, N_x	-12910	-46870	-16820	-18810	-6985	-7365
SHEAR, N_{xy}	3400	12340	5060	5660	2530	2670
BLADE STRENGTH/BUCKLING	APPLIED	ALLOWABLE	APPLIED	ALLOWABLE	APPLIED	ALLOWABLE
COMPRESSIVE STRENGTH						
AXIAL LOAD, N_x	-14270	-19620	-17370	-17400	-5140	-13190
TENSILE STRENGTH						
AXIAL LOAD, N_x	5130 *	22390	7320	19380	940	15070
BUCKLING (LOCAL)						
AXIAL LOAD, N_x	-14270	-21940	-17370	-18500	-5140	-6356
STIFFNESS DATA						
TORSIONAL (Gt_s), (lbf/in)	1.6×10^6		1.0×10^6		0.49×10^6	
BENDING ($E\bar{t}$), (lbf/in)	4.8×10^6		5.0×10^6		5.0×10^6	
EXTENSIONAL (EA) (lbf)	38.4×10^6		40.2×10^6		40.0×10^6	
PANEL EQUIVALENT THK. ($\bar{t}$) in	0.563		0.543		0.352	

1. BLADE SPACING = 8.00 in

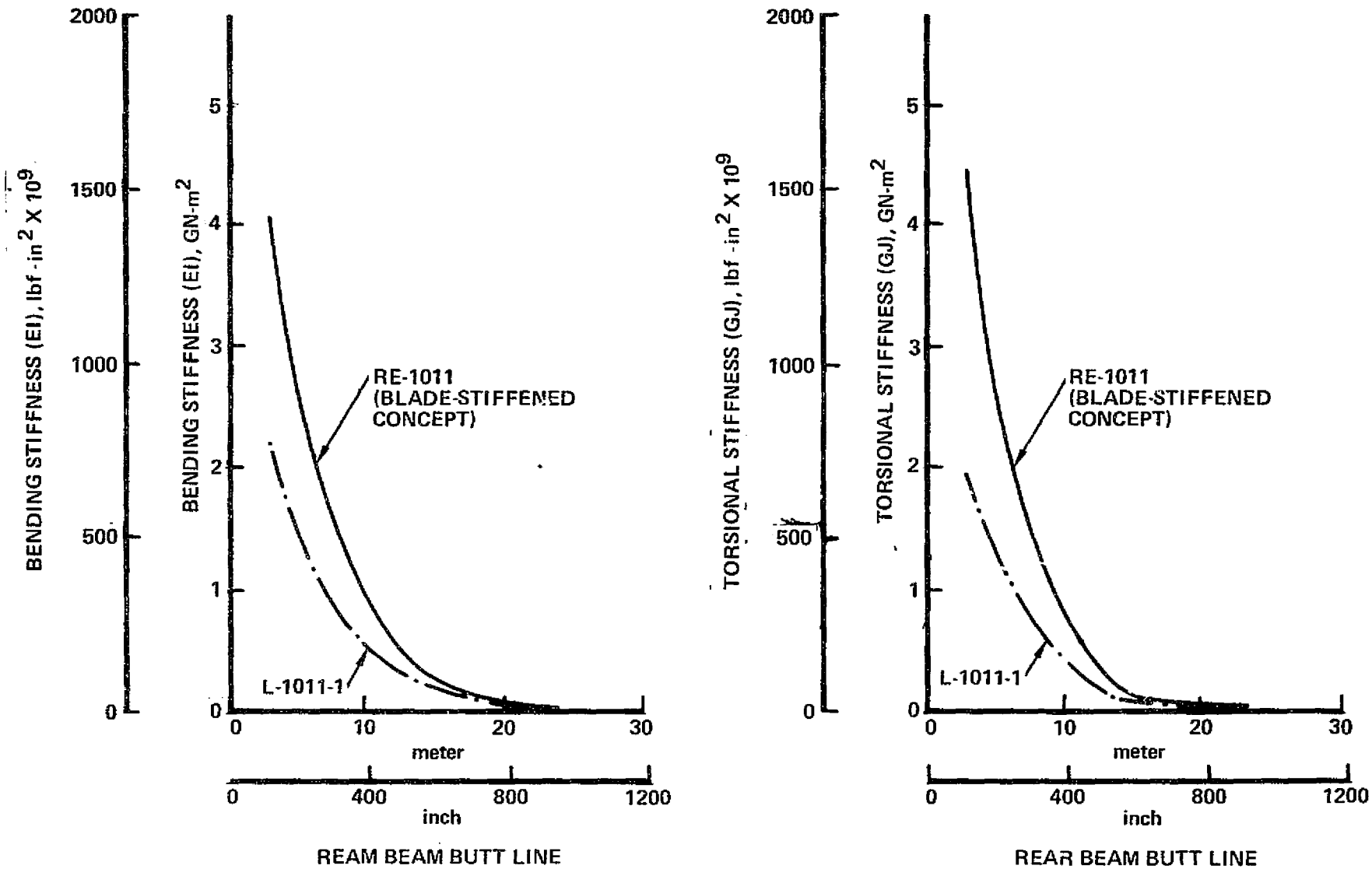

Figure 35. Wing Bending and Torsional Stiffness, Blade-Stiffened Surface Panels

ORIGINAL PAGE IS
OF POOR QUALITY

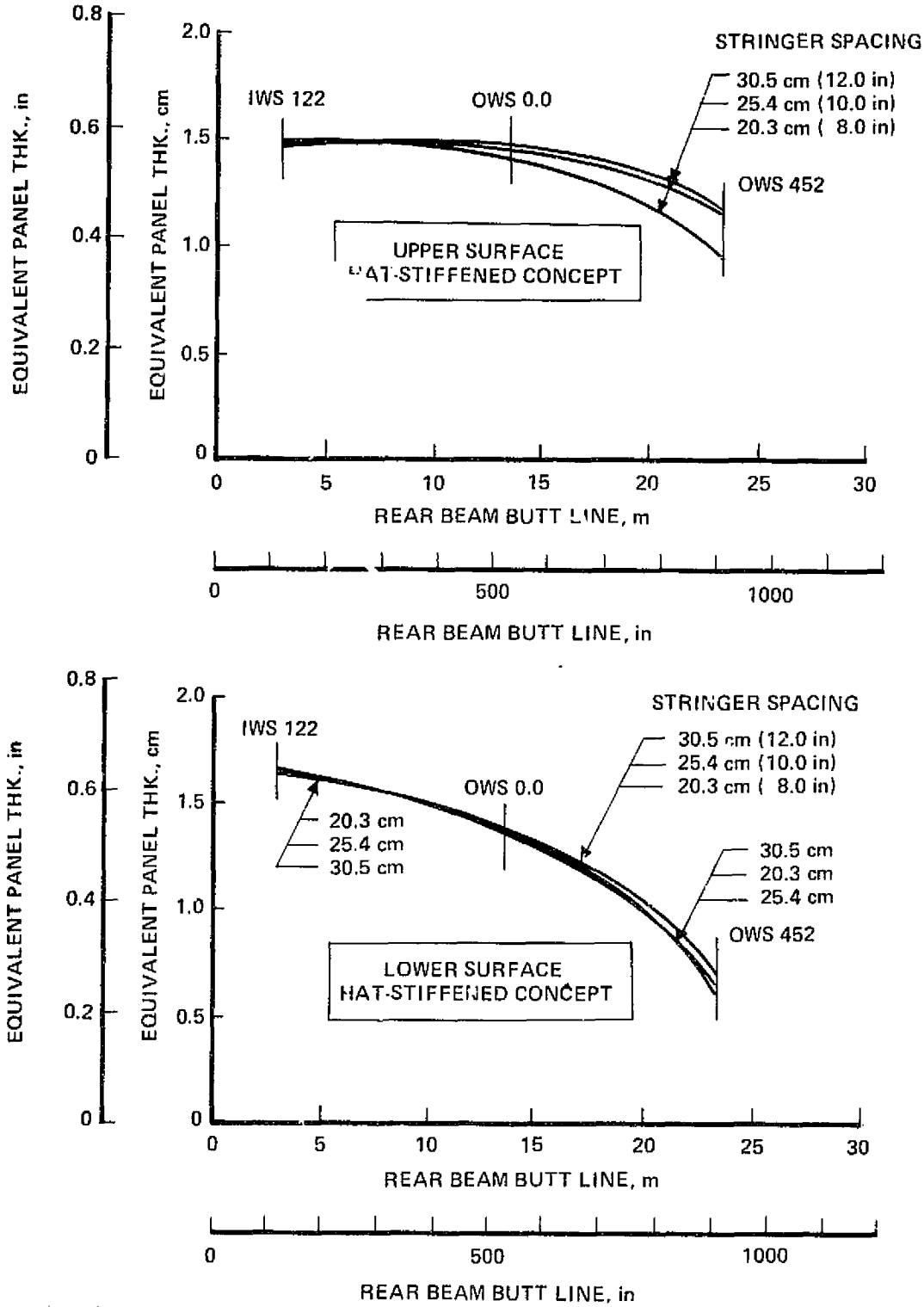

Figure 36. Variation in Panel Thickness with Stringer Spacing, Hat-Stiffened Concept

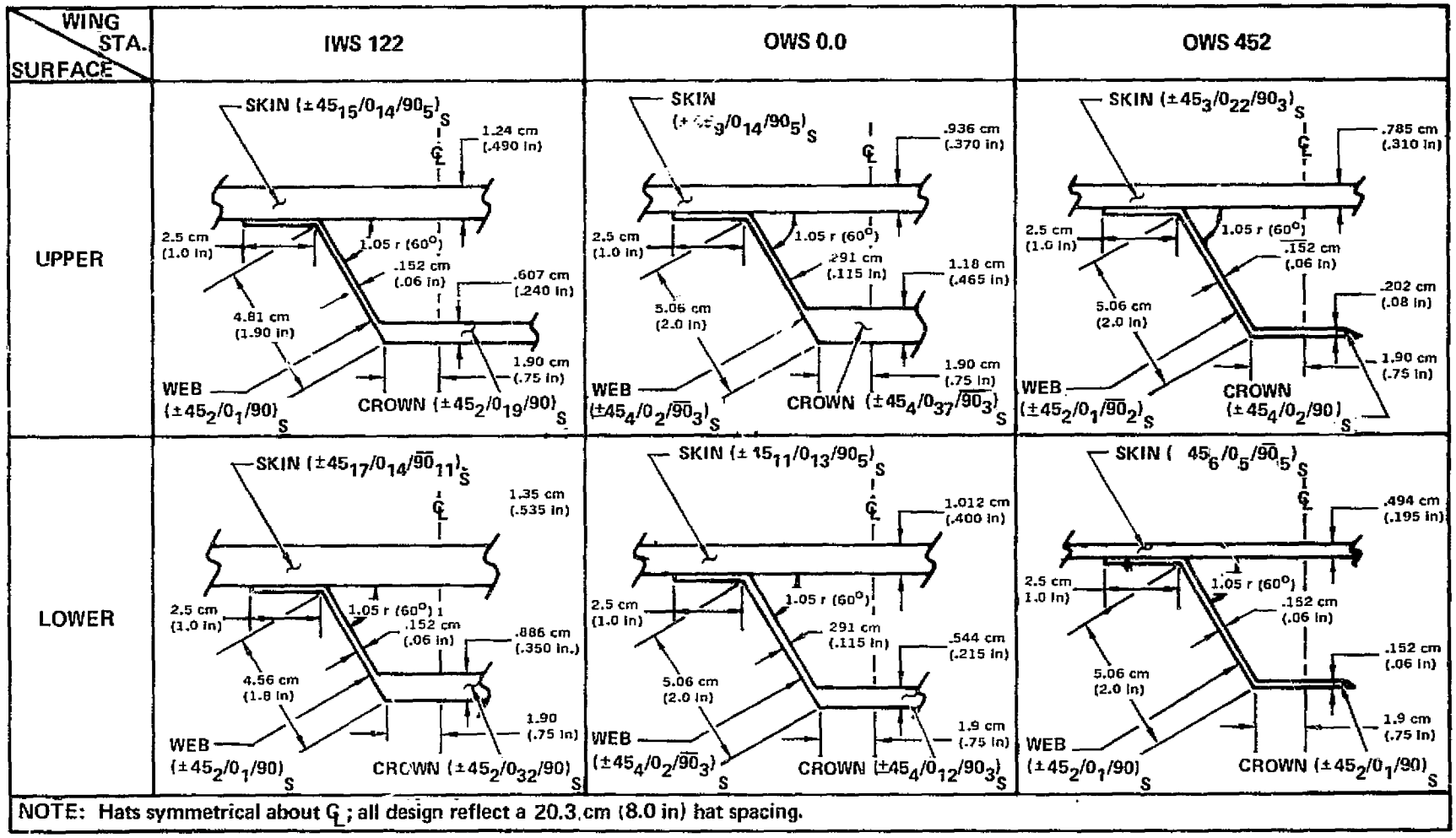

NOTE: Hats symmetrical about ℄; all design reflect a 20.3 cm (8.0 in) hat spacing.

Figure 37. Cross-Sectional Data for Hat-Stiffened Panel Configurations

ORIGINAL PAGE IS
OF POOR QUALITY

of the design data for the upper wing hat-stiffened panel designs, that correspond to the previously discussed panel cross sectional data, is shown in Table 22. This table presents the applied and allowable loads for the total cross section and each structural element of that cross section. The allowable loads corresponding to the basic strength (tension and compression) and buckling failure modes of the respective structural element are defined. Additionally, the related stiffnesses (i.e., torsional, bending and extensional) and equivalent thickness of each panel are specified.

The overall wing bending and torsional stiffnesses for a typical hat-stiffened configuration are presented in Figure 38. Appreciably greater stiffnesses are indicated at the inboard wing station for the composite wing design RE-1011 as compared to the corresponding data for the L-1011-1 wing design.

Structural Arrangments

The wing configuration for the baseline airplane is presented in Figure 39. The figure depicts a planform view of the wing with respect to the wing reference plane and shows the front and rear spar locations and configurations. In addition, wing cuts were obtained and are shown to illustrate the wing box geometry. The location of some of the major structural components; such as, the wing engine pylon, main landing gear, and control surfaces are shown in Figure 40. These components impose boundary constraints which were incorporated in the structural box definition, e.g., the main landing gear, in association with the leading edge surface requirements, limit the width of the inboard structural box. A more detailed description of the structural interface requirements is contained in Appendix D, Wing Design Criteria and Structural Requirements Considerations.

In addition to the above requirements, the wing box must meet the interface requirements imposed by the fuel, electrical, hydraulic, environmental, propulsion and control systems. These requirements can be both environmental (load, temperature) and mechanical (mountings, holes). A general documentation of the systems interface requirements is presented in the aforementioned appendix.

To maintain impartiality in the identification of significant problems associated with composite wing structure, conceptual design drawings of both the

TABLE 22. SUMMARY OF DESIGN DATA FOR UPPER SURFACE PANELS - HAT-STIFFENED CONFIGURATION

ITEM	LOAD INTENSITIES (kN/m)					
	IWS 122		OWS 0.0		OWS 452	
APPLIED LOADS						
COMPRESSION						
AXIAL LOAD, N_x	-2592		-4133		-1245	
SHEAR LOAD, N_{xy}	595		886		443	
TENSION						
AXIAL LOAD, N_x	1086		1862		312	
SHEAR LOAD, N_{xy}	385		958		597	
GENERAL INSTABILITY	APPLIED	ALLOWABLE	APPLIED	ALLOWABLE	APPLIED	ALLOWABLE
AXIAL LOAD, N_x	-2592	-4614	-4133	-7707	-1245	-1410
SHEAR LOAD, N_{xy}	595	595	886	886	443	443
SKIN STRENGTH/BUCKLING	APPLIED	ALLOWABLE	APPLIED	ALLOWABLE	APPLIED	ALLOWABLE
COMPRESSIVE STRENGTH						
AXIAL LOAD, N_x	-2213	-3381	-2830	-3020	-1250	-1998
SHEAR LOAD, N_{xy}	595	910	886	945	443	708
TENSILE STRENGTH						
AXIAL LOAD, N_x	868	3758	1202	2008	286	294
SHEAR LOAD, N_{xy}	385	1668	958	1600	597	616
BUCKLING (LOCAL)						
AXIAL LOAD, N_x	-2213	HIGH	-2830	-11539	-1250	-4741
SHEAR LOAD, N_{xy}	595		886	-3612	443	1681
CROWN STRENGTH/BUCKLING	APPLIED	ALLOWABLE	APPLIED	ALLOWABLE	APPLIED	ALLOWABLE
COMPRESSIVE STRENGTH						
AXIAL LOAD, N_x	-2419	-3257	-6321	-6336	-327	-651
TENSILE STRENGTH						
AXIAL LOAD, N_x	841	3753	2525	7304	47	724
BUCKLING (LOCAL)						
AXIAL LOAD, N_x	-2419	HIGH	-6321	HIGH	-327	-1215
WEB STRENGTH/BUCKLING						
COMPRESSIVE STRENGTH						
AXIAL LOAD, N_x	-216	-326	-573	-628	-129	-326
TENSILE STRENGTH						
AXIAL LOAD, N_x	83	346	248	673	23	346
BUCKLING (LOCAL)						
AXIAL LOAD, N_x	-216	-317	-573	-1897	-129	-286
STIFFNESS DATA						
TORSIONAL (GI_z), GN/m	260.0		175.0		86.0	
BENDING (EI), GN/m	841.0		933.0		846.0	
EXTENSIONAL (EA), GN	171.0		189.0		172.0	
PANEL EQUIV. THK. (t), cm	1.47		1.38		0.940	

1. HAT SPACING = 20.3 cm

ITEM	LOAD INTENSITIES (lbf/in)					
	IWS 122		OWS 0.0		OWS 452	
APPLIED LOADS						
COMPRESSION						
AXIAL LOAD, N_x	14800		23600		7110	
SHEAR LOAD, N_{xy}	3400		5060		2530	
TENSION						
AXIAL LOAD, N_x	6200		10630		1780	
SHEAR LOAD, N_{xy}	2200		5470		3410	
GENERAL INSTABILITY	APPLIED	ALLOWABLE	APPLIED	ALLOWABLE	APPLIED	ALLOWABLE
AXIAL LOAD, N_x	14800	26347	23600	44350	7110	8100
SHEAR LOAD, N_{xy}	3400	3400	5060	5060	2530	2530
SKIN STRENGTH/BUCKLING	APPLIED	ALLOWABLE	APPLIED	ALLOWABLE	APPLIED	ALLOWABLE
COMPRESSIVE STRENGTH						
AXIAL LOAD, N_x	12638	19306	16163	17242	7137	11406
SHEAR LOAD, N_{xy}	3400	5194	5060	5398	2530	4044
TENSILE STRENGTH						
AXIAL LOAD, N_x	4957	21462	6855	11470	1630	1680
SHEAR LOAD, N_{xy}	2200	9525	5470	9139	3410	3515
BUCKLING (LOCAL)						
AXIAL LOAD, N_x	12638	HIGH	16163	65889	7137	27071
SHEAR LOAD, N_{xy}	3400		5060	20627	2530	9596
CROWN STRENGTH/BUCKLING	APPLIED	ALLOWABLE	APPLIED	ALLOWABLE	APPLIED	ALLOWABLE
COMPRESSIVE STRENGTH						
AXIAL LOAD, N_x	13813	18600	36094	36177	1869	3720
TENSILE STRENGTH						
AXIAL LOAD, N_x	4800	21430	14417	41710	269	4136
BUCKLING (LOCAL)						
AXIAL LOAD, N_x	13813	HIGH	36094	HIGH	1869	6939
WEB STRENGTH/BUCKLING						
COMPRESSIVE STRENGTH						
AXIAL LOAD, N_x	1236	1860	3271	3588	738	1860
TENSILE STRENGTH						
AXIAL LOAD, N_x	474	1974	1415	3841	131	1974
BUCKLING (LOCAL)						
AXIAL LOAD, N_x	1236	1808	3271	11402	738	1632
STIFFNESS DATA						
TORSIONAL (GI_z), (lbf/in)	1.0×10^6		1.0×10^6		0.49×10^6	
BENDING (EI), (lbf/in)	4.8×10^6		5.33×10^6		4.83×10^6	
EXTENSIONAL (EA) (lbf)	38.4×10^6		42.5×10^6		38.6×10^6	
PANEL EQUIVALENT THK (t), in	0.578		0.543		0.370	

1. HAT SPACING = 8.00 in

ORIGINAL PAGE IS
OF POOR QUALITY

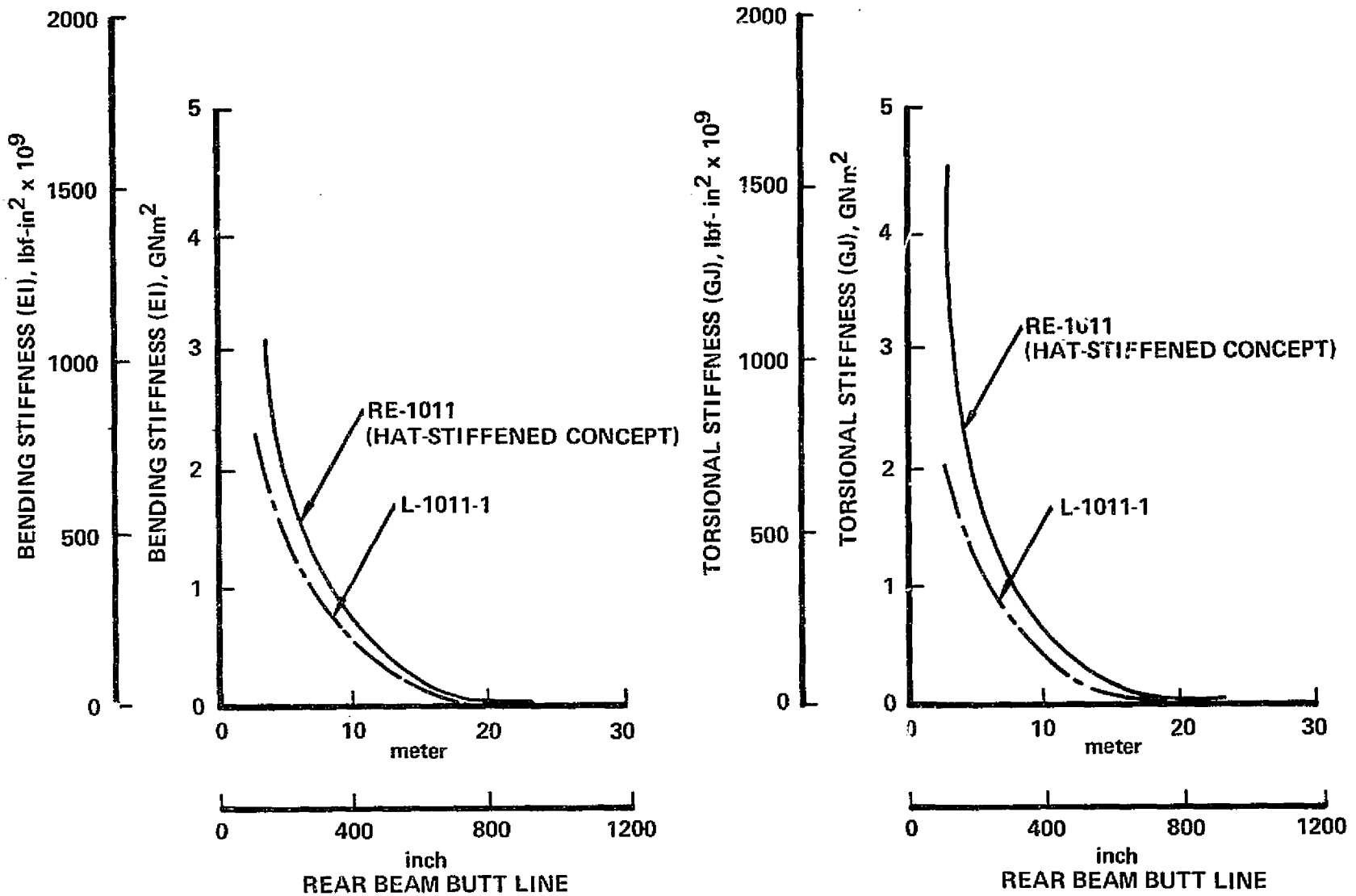

Figure 38. Wing Bending and Torsional Stiffness, Hat-Stiffened Surface Panels

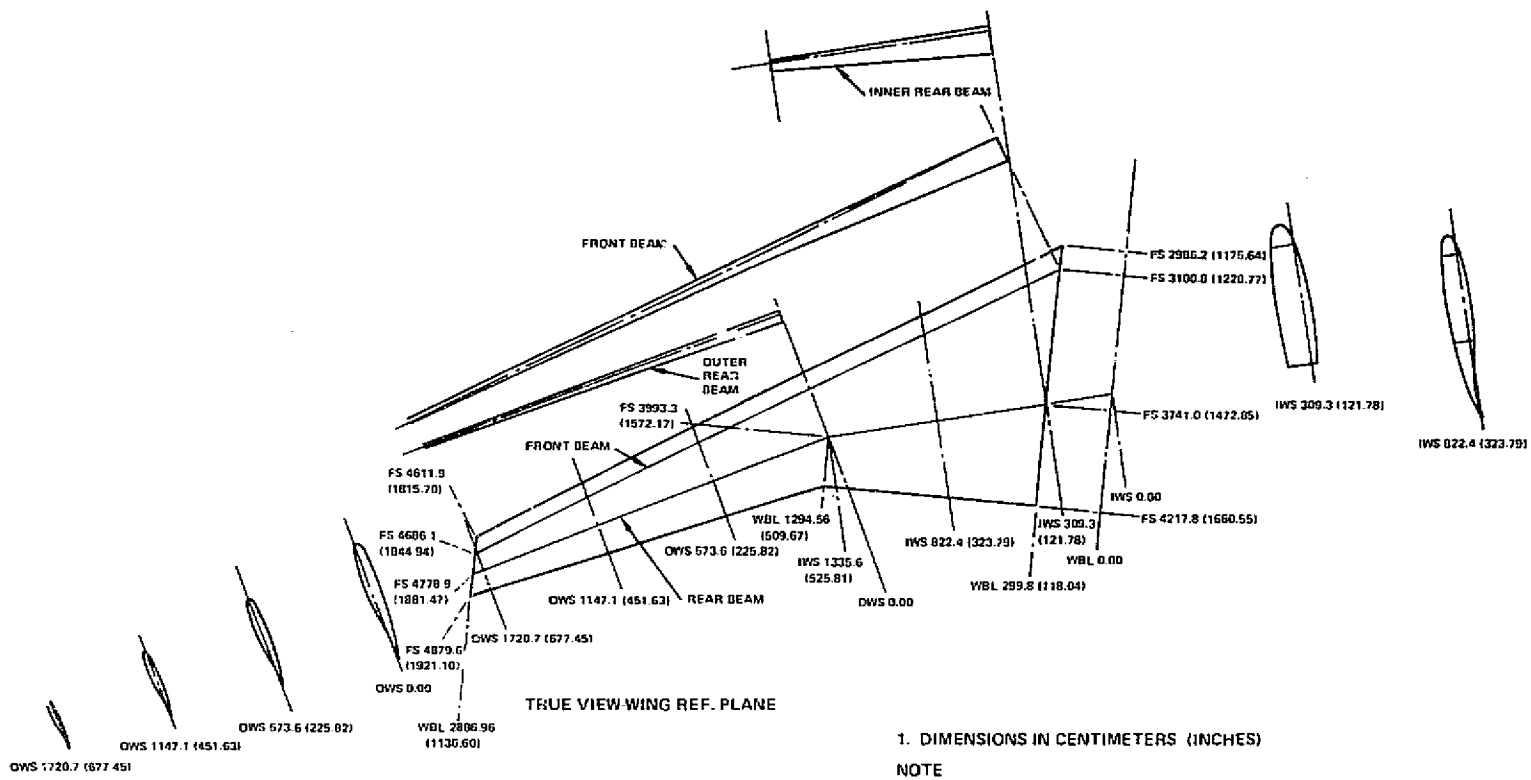

Figure 39. Wing Configuration Data

ORIGINAL PAGE IS
OF POOR QUALITY

WING COMPARISON

	WING AREA SQ. METERS (SQ. FT.)	ASPECT RATIO	SPAN	SWEEP-25C RAD. (DEG.)	TAPER RATIO	THICKNESS/CHORD RATIO PERCENT BL CM. (BL IN.)			MAX. THICKNESS METERS (INCHES) BL 117.5	TIP
CL1337	330.5 (3558)	10	57.49 METERS (188 FT. 7 IN.)	.5235 (30)	0.30	14 BL298.4 14 (BL 117.5)	12 BL1288.6 12 (BL507.32)	10 TIP 10 TIP	1.725 67.9	.264 10.4
L-1011	321.1 (3456)	6.95	47.34 METERS (155 FT. 4 IN.)	.6108 (35)	0.30	12.4 BL 298.45 12.4 (BL 117.5)		9 TIP 9 TIP	1.308 51.5	.282 11.1

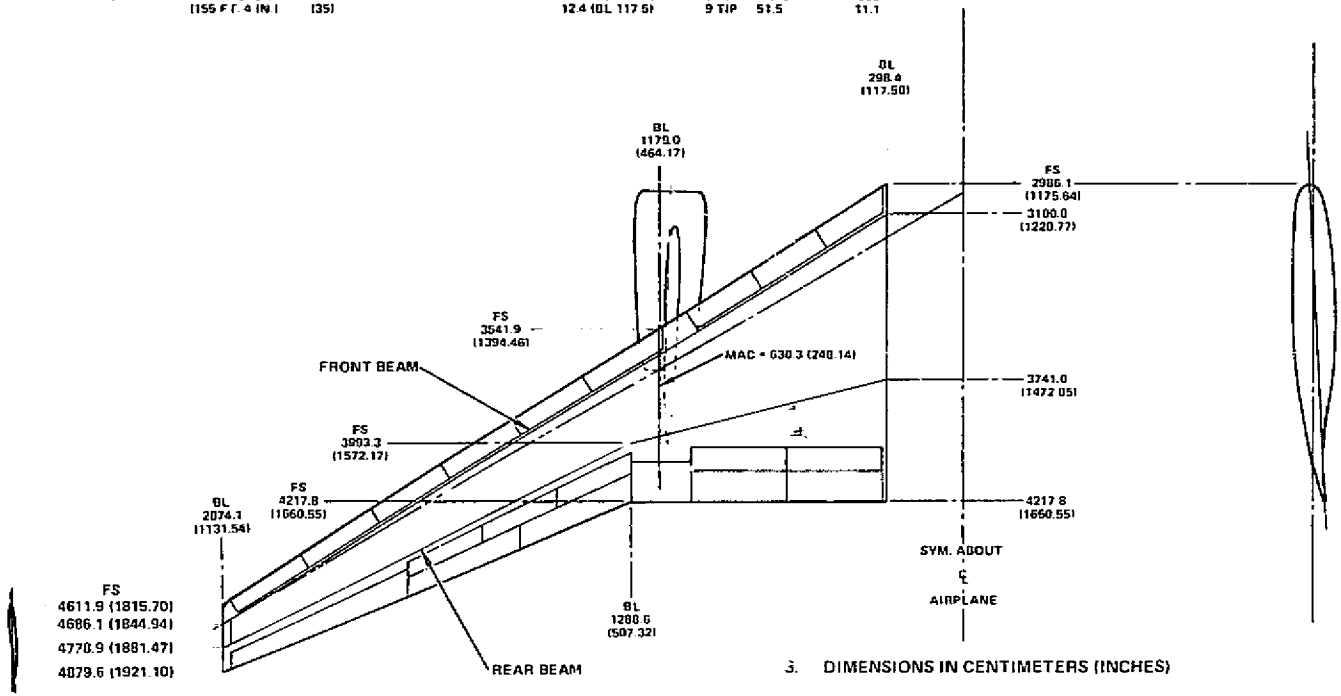

3. DIMENSIONS IN CENTIMETERS (INCHES)
2. 0 M.L.G. TRUNNION
1. ⊗ M.L.G. STRUT

NOTE

SCALE 1/50

ORIGINAL PAGE IS OF POOR QUALITY

Figure 40. Basic Wing Data

multi-rib and multi-spar structural arrangements were developed. Figure 41 presents an isometric drawing of the L-1011 airplane with views depicting the generalized structure for these structural arrangements. The wing structural arrangements for the multi-spar and multi-rib designs are shown in Figures 42 and 43 respectively. Incorporated in the arrangements are some of the specific design features uncovered during the detail analysis and design aspect study. A few of the more significant features are:

- The production joint at the wing/fuselage intersection,
- The wing surface panel stiffener orientation for the multi-rib design are parallel to the rear beam of the outer wing (i.e., from OWS 0.0 to the tip),
- The location of the support/carry-through structure for the main landing gear, and
- The identification of special ribs (e.g., surge, intermediate and divider ribs) that are required by the fuel system.

Some of these design features imposed modifications on the structural arrangement drawings. For example, the third design feature necessitated redefining the trailing edge concept. In addition to these above design features, ample, strategically located access doors were incorporated in the wing surface design for assembly and maintainability purposes.

Manufacturing Breakdowns

The manufacturing breakdown of the major components of the wing are based on a series of decisions which occur in parallel with progress of the engineering design. The breakdown of the ribs, spars and skins are considered with respect to the design of the entire wing box. While an engineering design of a one-piece wing box extending from the fuselage joint to the tip may be a minimum weight design, practical manufacturing considerations of tooling, facilities, uncured material aging limitations and manloading in a limited area often dictate alternatives. The manufacturing input to design development is an iterative one which continues until an optimum configuration consistent with feasible and economic manufacture is achieved.

ORIGINAL PAGE IS
OF POOR QUALITY

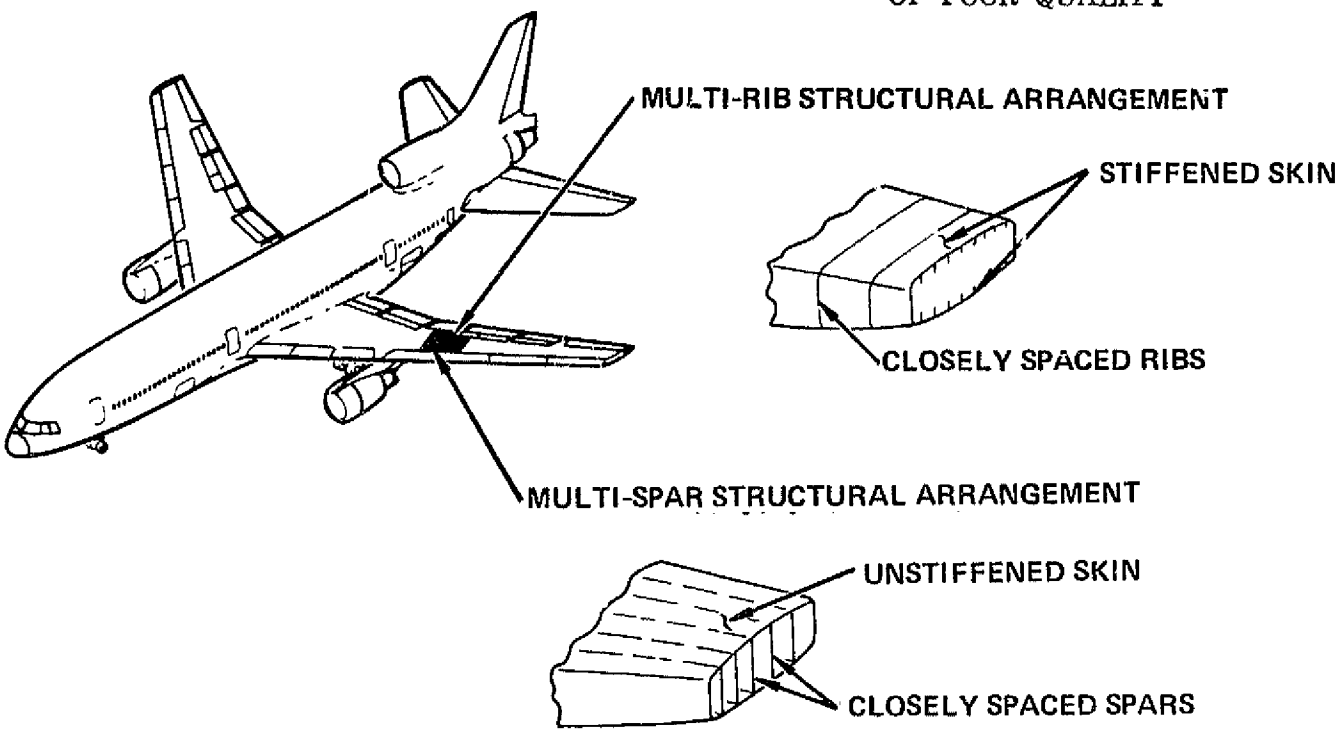

Figure 41. Generalized Wing Structural Arrangements

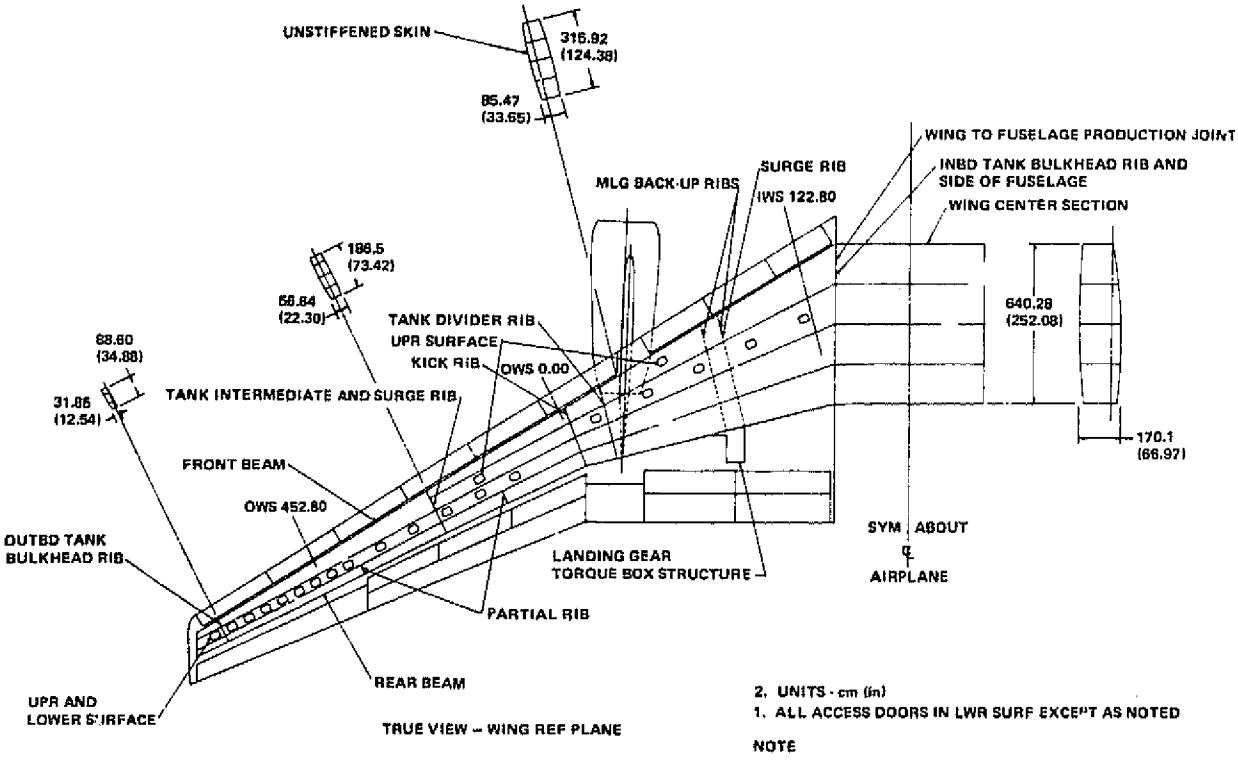

Figure 42. Wing Multi-Spar Structural Arrangement

A wing extending from the side of the fuselage to the tip without spanwise or chordwise joints may not prove to be feasible; however, for the purposes of this preliminary study, such a design was postulated. Figure 44 shows a proposed manufacturing breakdown for a wing of multi-rib arrangement. The following text describes typical methods of fabricating the major components of the wing box, as illustrated in the referenced figure, and the corresponding tooling requirements to accomplish this task.

Wing Covers.- The stiffeners are proposed to be fabricated with the wing skins to form a complete cover. A typical fabrication sequence for the blade-stiffened wing cover is as follows:

(1) Layup broadgoods into orientations and thicknesses required for doublers, fillers, stiffener components. Cut to size, wrap and store in freezer.

(2) Lay wing skin, including partial plies, on tool. As required during and after skin layup, add details described in item (1).

(3) Remove blade-stiffener details from freezer, thaw, and form as shown on the cover drawing of Figure 44. These are to be completed when item (2) is completed.

(4) Place properly supported blade-stiffened details on inner surface of skin and cocure to form a complete cover. Trim for assembly.

For the alternate hat-stiffened wing cover design, the hat stiffeners are either cured and adhesively bonded to the skin or cocured using an internal bladder-type mandrel to support the hat during cure.

In order to fabricate the wing skin in one piece, full-size tools approximately 6.4 x 32.6 m(21 x 107 ft) are required. To achieve the proper contour for the layup and cure tools, master models (Figure 45) of the left and right hand, upper and lower, outside surfaces are required. The four master models will define the outer mold lines of the wing contours. The models will be constructed by attaching numerical control (N/C) cut templates (which define the contour at various butt lines) to a steel frame which rests on a reinforced concrete level pad. The master is faced with plaster or plastic.

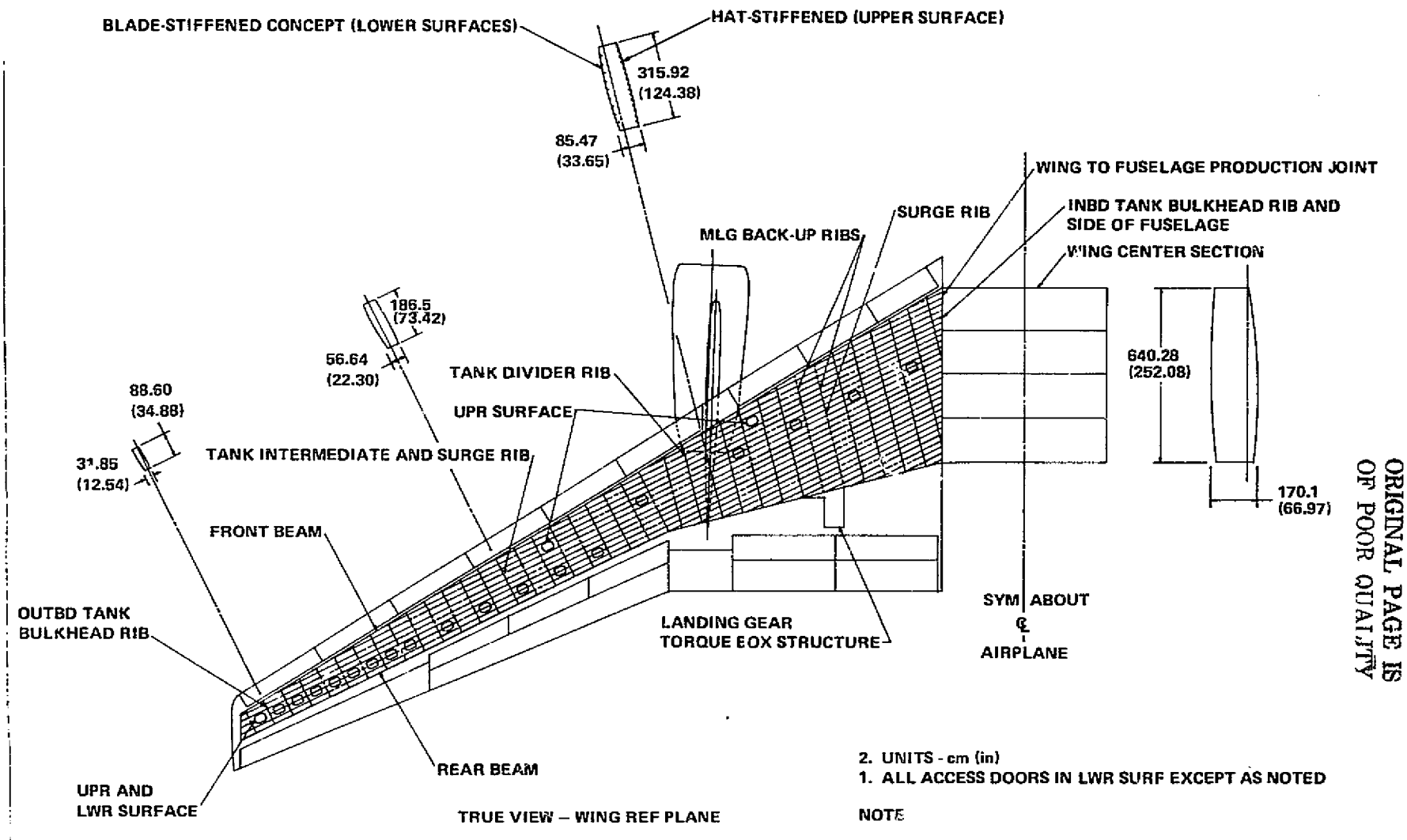

ORIGINAL PAGE IS
OF POOR QUALITY

Figure 43. Wing Multi-Rib Structural Arrangement

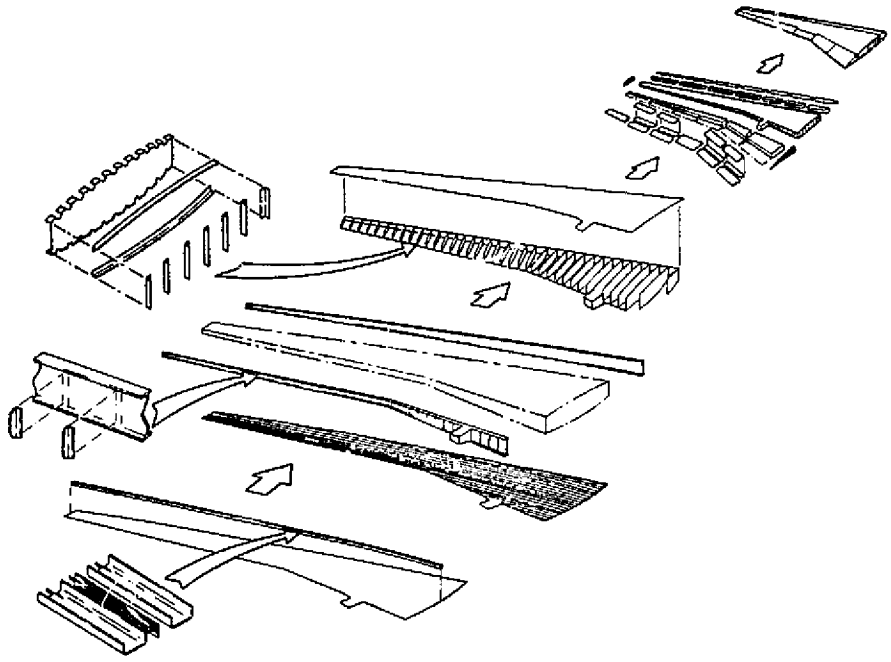

Figure 44. Typical Manufacturing Breakdown - Multi-Rib Design

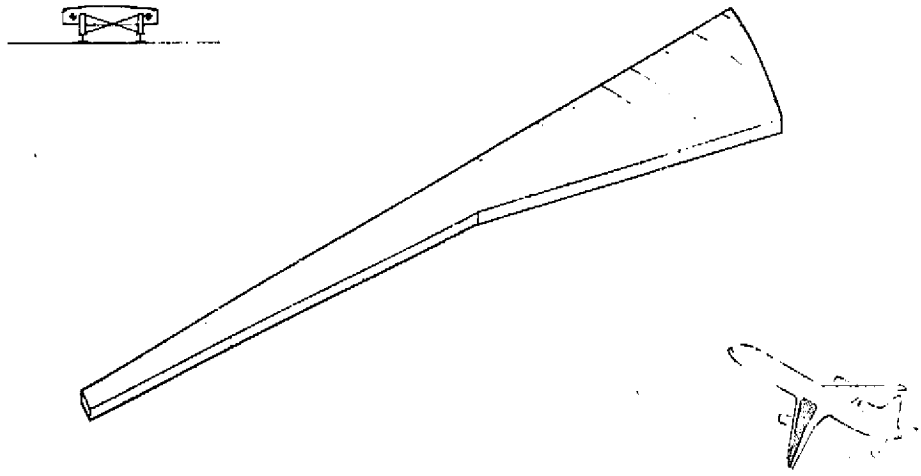

Figure 45. Master Model

ORIGINAL PAGE IS
OF POOR QUALITY

Several approaches can be taken in the construction of the skin layup and cure tools. One such approach could use graphite surfaces to define the wing contour on the skin in the following manner:

(1) Layup and cure a graphite face plate directly on the master model. The initial cure of this face plate will be at a sufficiently low temperature to set the resin, but not affect the material of the master model.

(2) Buildup a female layup and curing tool less the face plate. This tool must be capable of withstanding the pressure/temperature environment of the autoclave cycle. The frame will be of truss beam construction to allow for circulation and even heating of the underside of the surface.

(3) Invert the frame on the graphite face plate which is on the master model. Attach the face plate to the frame, remove the now completed tool from the master model and post cure the graphite face (Figure 46). This tool will have built-in vacuum and the thermocouple systems and will be mounted on wheels that have compatible spacing as the rails in the autoclave. Four tools are required - one each for the upper and lower, left and right, wing covers (Figure 47).

An alternative to the above tooling approach is one in which has an integral heat, vacuum and pressure application system and includes provisions for matched molding and/or diaphragms for fluid pressure application. This would eliminate the requirements of a very large autoclave. This tool could be built of steel face sheets welded to N/C cut header boards for contour. The upper half would be removable while the lower half is fixed. Rest pads would be required to store the upper half when it is not in use (Figure 48).

Actual layup of the wing skins will be done using a broadgoods dispensing machine such as shown in Figure 49. This machine contains roll(s) of tape in a movable rotating head. The head moves across the gantry which in turn moves lengthwise, thus crosswise oriented (90-degrees) and lengthwise oriented (0-degrees) layers can be made. Angular layers can be made by vector runs (i.e., head moves laterally while the gantry is moving lengthwise). All movements are numerically controlled. A pressure roller on the head compacts the layers during operation. Machines similar to the one illustrated in the aforementioned figure are currently in use at major fabricators

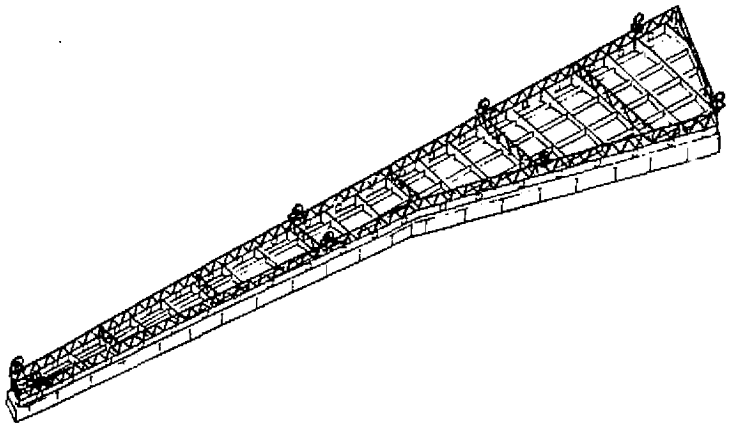

Figure 46. Skin Layup Tool Construction

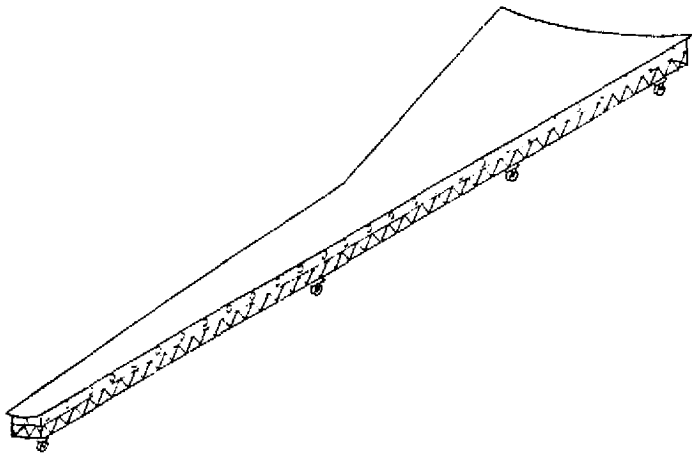

Figure 47. Skin Layup Tool

ORIGINAL PAGE IS
OF POOR QUALITY

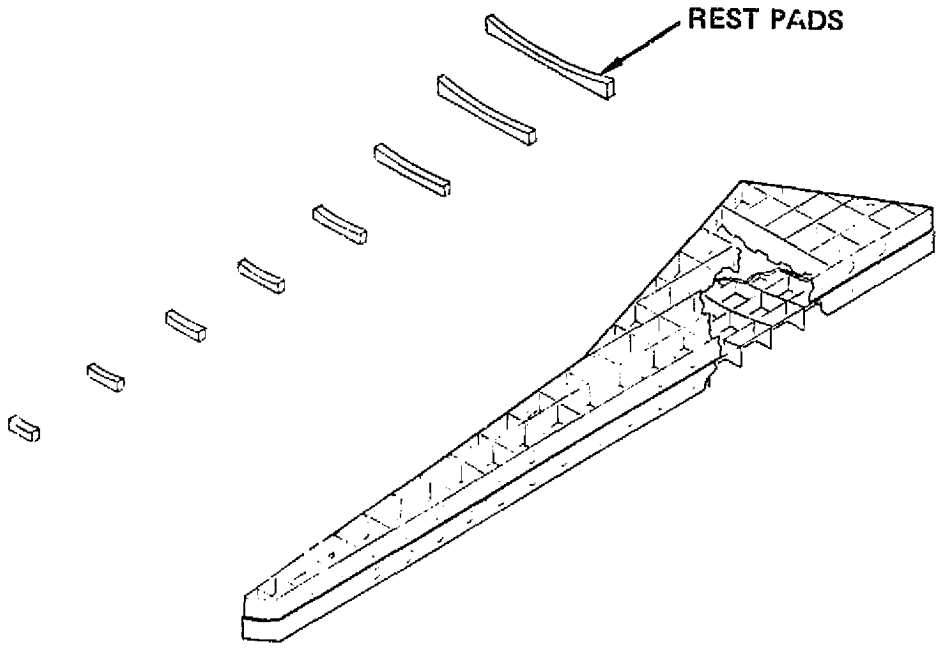

Figure 48. Integral Heat/Pressure Skin Molding Tool

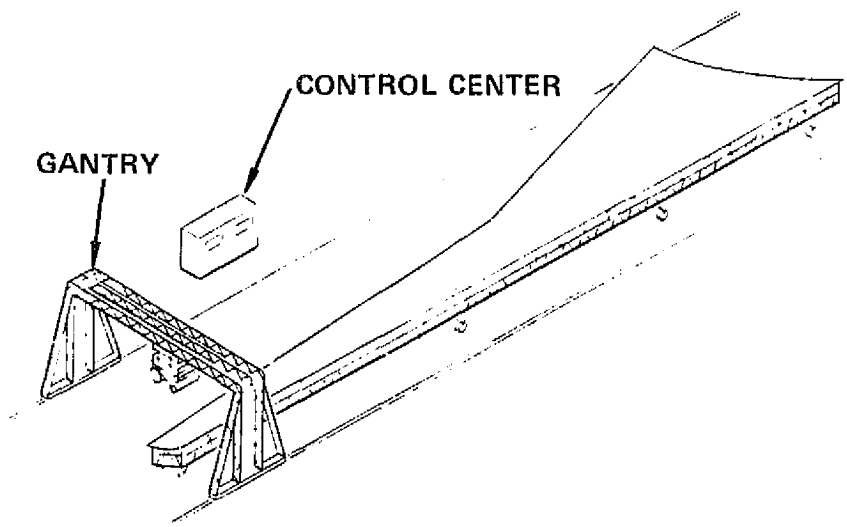

Figure 49. Broadgoods Dispensing Machine

of graphite laminates. Although this illustration shows a contoured mold in place, a flat table can also be used to make basic broadgoods. A cutting head would also be installed to cut or trim parts and basic layups.

Laminate material for the blade-stiffeners will be laid up using a broadgoods dispensing machine. The laminate will be slit to the developed width and laid up on tools to form the desired channel shape. The filler plies between the channels, will also be slit from laminate material.

As an alternative to the blade-stiffened design, a hat-stiffened design was also considered for the wing covers. Due to the extreme length of the enclosed hat sections, hats and skins will be separately cured and then adhesively bonded in a subsequent autoclave operation. Possible cocuring methods exists for this concept. One cocuring possibility would be to support the hat during cure by means of a rubber bladder which allows autoclave pressure to enter the hat and counterbalance the external autoclave pressure.

Several automatic methods of forming both the blade- and hat-stiffened concepts can be developed. One is the continuous roll form machine shown in Figure 50. This machine makes continuous constant section hat-stiffeners or U-channel sections for blade-stiffeners. Rolls of oriented pre-preg tape are held in the rack. Tapes from these rolls are fed through a series of powered rolls that progressively form the layers of tape to the desired form. This operation is similar to the roll forming of metal. The form continues through a teflon draw-type die and progresses to the heat-cure section. The stiffener emerges fully formed and cured at the end of this cycle, after which it continues across the cutoff table and is cut to the required length. A powered pull-through at the output is synchronized to the movement of the rolling section of the machine.

Another automatic method is the wet method shown in Figure 51. Fibers from rolls are drawn through a bath of resin. Upon exiting from the bath, excess resin is wiped from the unshaped mass which is then fed through a teflon draw-type die. This die has a developed wedge which forms the stiffener cross section at its output end. The formed shape then goes through a heat-cure section to emerge a fully formed and cured stiffener of a constant section. Caterpillar treads pull the stiffener through the above stages and out onto the cutoff table, where they are cut to the desired lengths. As an alternative to this method, rolls of prepreg tape could be inserted into the process, in place of the rolls of fiber, and the resin bath eliminated.

ORIGINAL PAGE IS
OF POOR QUALITY

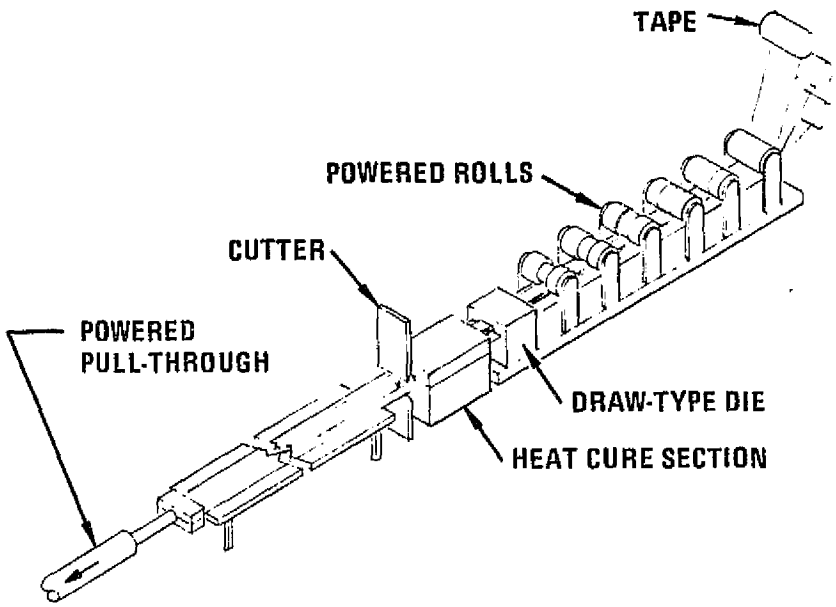

Figure 50. Stiffener Roll Forming Machine

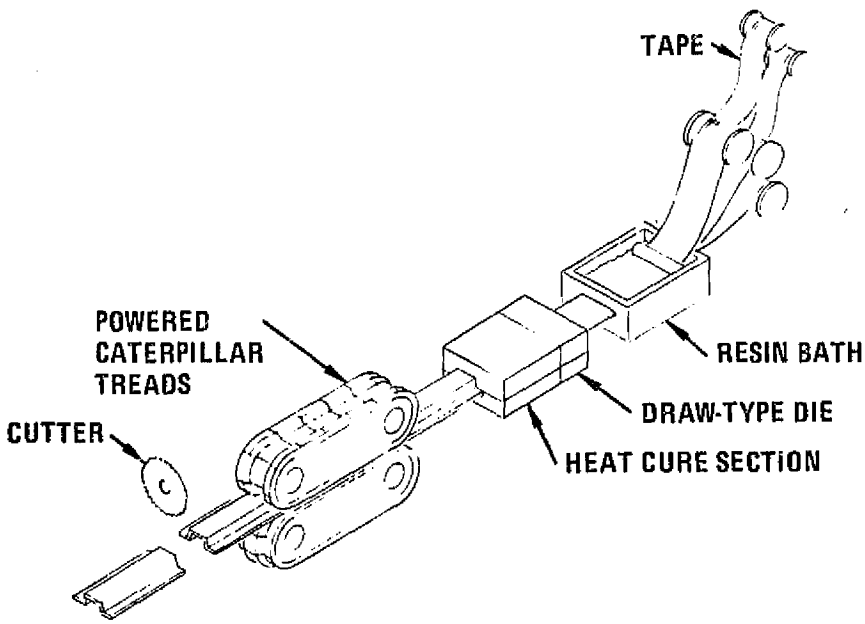

Figure 51. Stiffener Prepreg and Forming Machine

A final method, using a roll and pulform tool machine, is shown in Figure 52. Oriented prepreg tape is fed through forming rolls to the table. The table top contains the inner mold line (IML) form of the stiffener configuration coated with nonstick material (teflon); whereas, the tread mills contain the outer mold line (OML)of the stiffener. The treadmill, which contains the OML stiffener, is powered to give movement to the operation. The heat-cure element is located between the wheels. The stiffener exits from the tread mill onto the cutoff area and is cut to the required length.

Spars. - The spar concept displayed in the typical manufacturing breakdown of Figure 44 is a one-piece integrally molded laminate with caps, web and stiffeners cocured. The manufacturing approach is shown in Figure 53 with the fabrication sequence as follows:

(1) Layup broadgoods on flat tool to form doublers, web stiffeners, etc. Cut to size, wrap and store in freezer.

(2) Layup basic spar configuration, including partial plies on flat tool.

(3) Transfer spar layup to spar molding tool, add doublers and web stiffeners and cocure to form web. Trim for assembly.

An alternative to the one-piece molded spar approach is to include the spar caps into the wing cover fabrication process, and form the web separately. The stiffened web would be mechanically attached to the spar caps in assembly.

Two tooling methods are available for molding the one-piece spars. The first method is to use a trapped rubber-system where heating the restrained rubber causes it to exert pressure against the laminate (Figure 54). Another method uses a heater press to apply pressure with rubber blocks included to distribute the pressure (Figure 55).

Ribs. - The general design of the ribs provides for an integrally stiffened web with separate upper and lower caps. The manufacturing sequence is as follows:

(1) Layup broadgoods necessary for the design of the rib web. Include design details: such as, doublers and stiffeners.

(2) Layup material for rib caps and trim to size.

ORIGINAL PAGE IS
OF POOR QUALITY

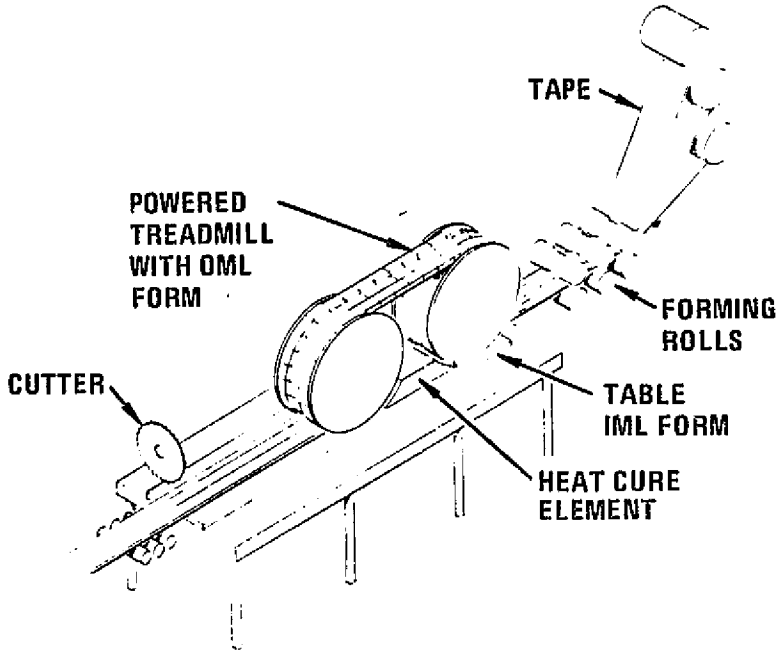

Figure 52. Stiffener Roll and Pulforming Machine

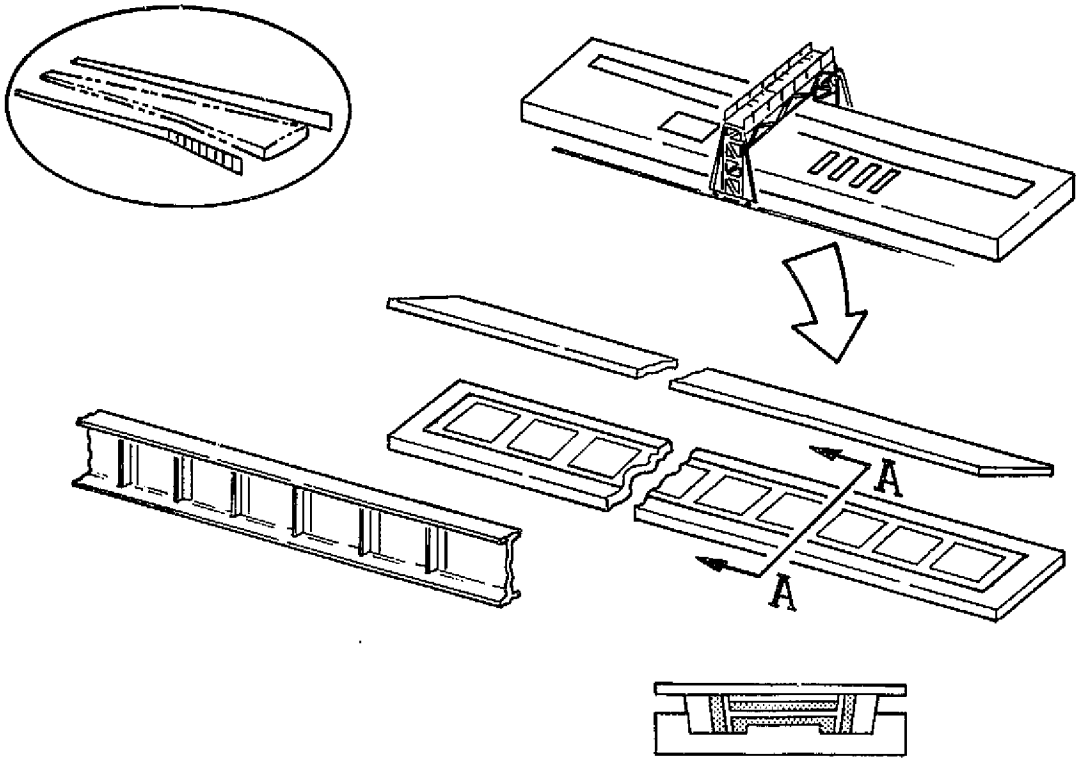

Figure 53. Wing Spar Manufacturing Approach

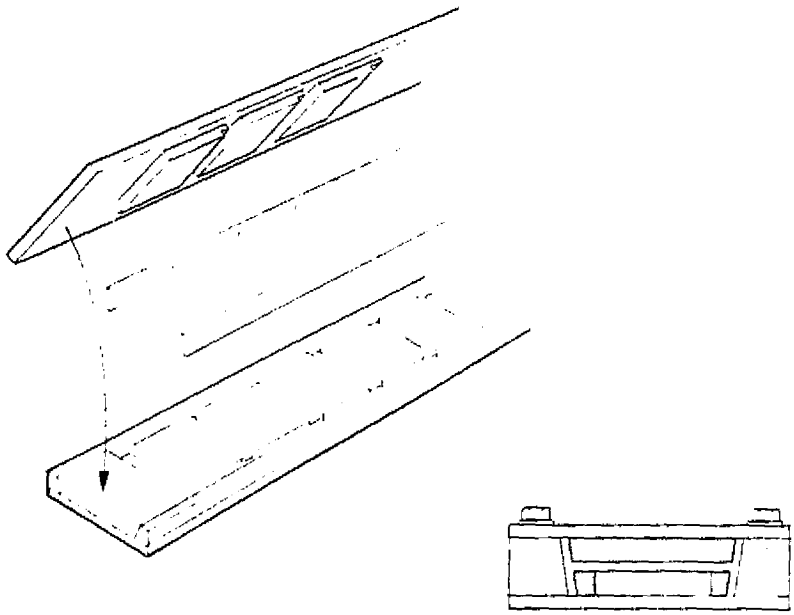

Figure 54. Elastomeric Tool for Molding One-Piece Spars

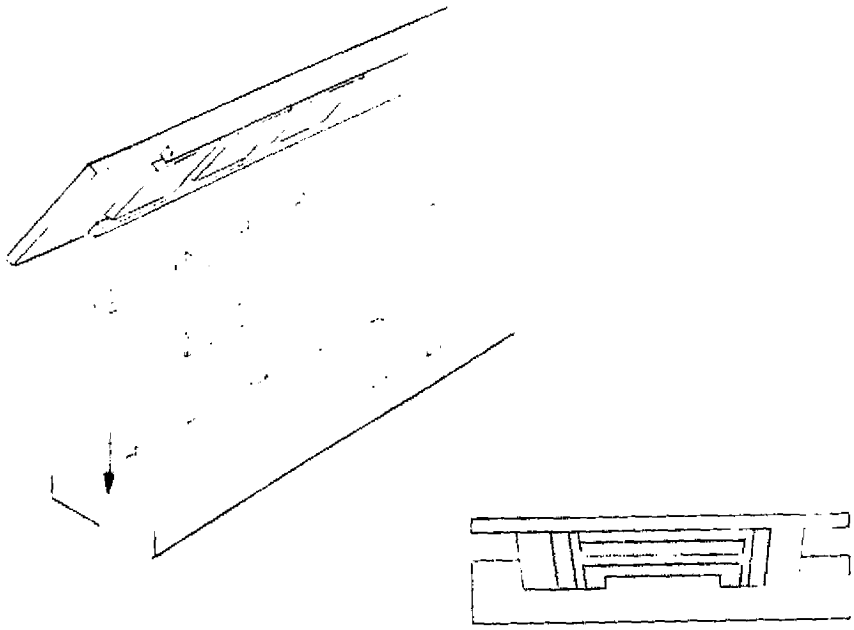

Figure 55. Heated Press Tool for Molding One-Piece Spars

(3) Mold web with stiffeners in place to form cocured structure.

(4) Cure rib caps in matched mold tool.

(5) Assemble caps to web with mechanical fasteners and trim for assembly.

Alternate configurations include truss ribs and solid web ribs with reinforced access holes. The tooling for fabricating the integrally stiffened web is similar to that described for the spars.

Rib caps will be molded in matched dies using a heated platen hydraulic press. To fabricate the tool and handling equipment for the large rib caps, a modular system is proposed. The tool will be divided into segments of 1.2 m (4.0 ft) to 1.8 m (6.0 ft). The segments are indexed to an incremental tool hole pattern in the platen of the press. The tool shown in Figure 56 has a base plate, wedge activated side plate and a cover plate. The closing pressure of the mold activates the side details for lateral pressure. Caps for truss type ribs required two molds, whereas caps for the solid web ribs require only one mold each. Left and right hand ribs require separate tools.

Design Aspects

Design aspects considered essential for inclusion in a composite wing structure development program were conceptually evaluated. This investigation was conducted in sufficient depth to provide viable approaches for design. The advantages and disadvantages of the candidate concepts for each design aspect are presented to highlight the problem areas requiring resolution by further analytical and experimental evaluations.

This study was focused on wing box structure compatible with a multi-rib structural arrangement. However, some design aspects, such as, access doors and substructure components are in general applicable to both multi-rib and multi-spar structural arrangements.

Wing Surfaces. - The skins and stringers of the surfaces for the wing structural box were addressed considering the application of composite materials to this structure. The design aspects included in this investigation were: the basic material layup for the surfaces, the orientation of the stiffeners and the provisions for access doors in these surfaces. In addition to these aspects, a general discussion

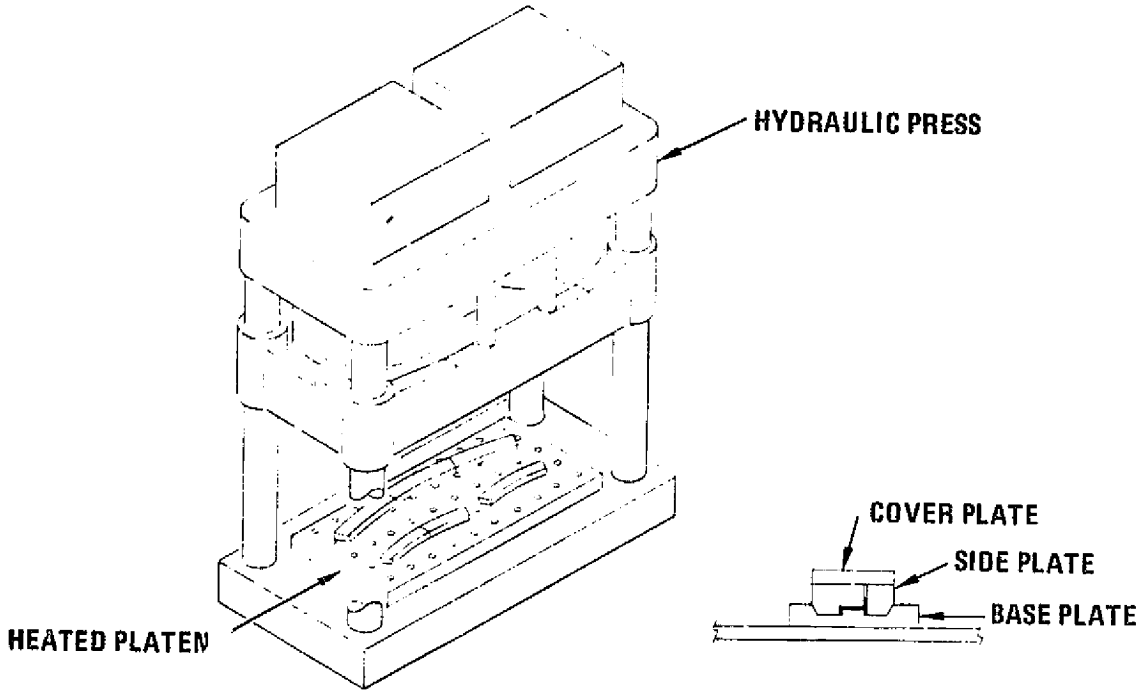

ORIGINAL PAGE IS
OF POOR QUALITY

Figure 56. Rib Cap Tooling

on wing joints is provided. The wing production joint, because of its extreme importance in the design of the wing box, is described separately in a later section.

Basic Material Layup: The multi-rib structural arrangement requires stiffened skin covers with closely spaced ribs to sustain the flight and landing loads during the service life of the airplane. The basic skin is a relatively thick laminate comprised of multi-layers of 0, ± 45 and 90 degree plies which is tapered, to some extent, from the wing root to the tip. The stiffeners, which are cocured with the skin, are tapered in width and height.

This spanwise tailoring of the cover material severely complicates the fabrication of the surfaces, but it is necessary in order to achieve a viable weight and operating cost for the airplane. This design aspect was investigated using the results of the previously reported detail analysis. More specifically, the thicknesses and ply orientations defined for the blade-stiffened surfaces at the three point design regions were used to interpolate the material layup for the entire wing. Figures 57 and 58 present examples of the layup sequencing required for the upper and lower covers. The number and orientations of the unidirectional plies were adjusted during this process but the minimum requirements as dictated by the theoretical strength/stiffness analysis were maintained. These figures show the proposed method of adding or deleting the plies.

In both figures the general family of crossplied laminates are indicated; however, a later analysis may dictate a different method of interspersal to give a more efficient final layup. In areas of high stress, additional reinforcing plies will be required. The method of reinforcing the structure adjacent to the access holes is illustrated in Figure 58.

Stiffener Orientation: Another design aspect investigated was that of the orientation of the stiffener on the wing surfaces. Candidate stiffener orientations were defined and subjected to a conceptual evaluation. A description of the candidate concepts and the results of the evaluation are presented in Figure 59 and Table 23, respectively. In summary, the candidate concepts included wing skin with (1) stringers on percent chord, (2) stringers parallel to the front beam, and (3) stringers parallel to the rear beam of the outer wing. The results indicated that

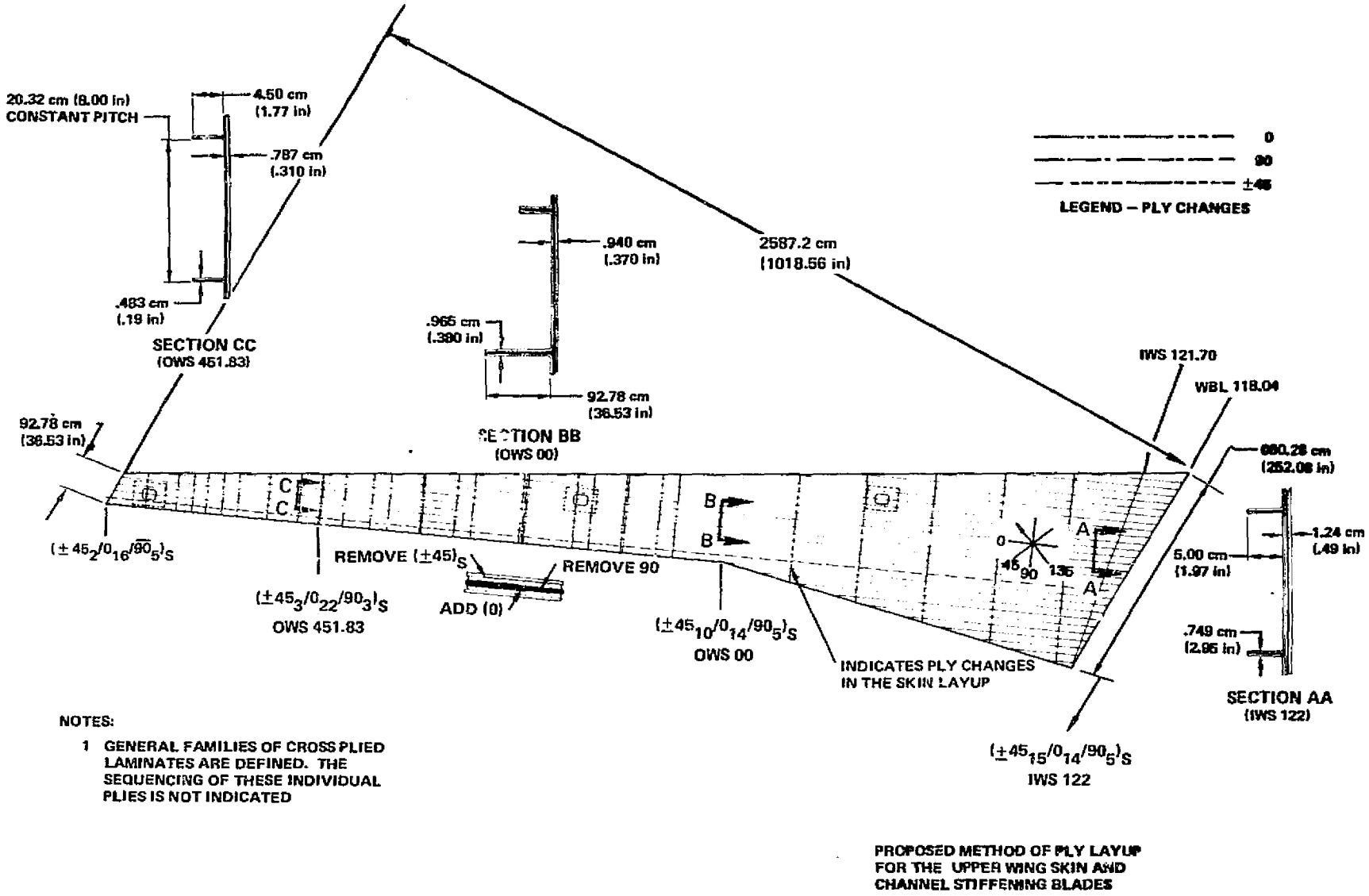

ORIGINAL PAGE IS
OF POOR QUALITY

Figure 57. General Family of Crossplied Laminates for the Upper Wing Surface

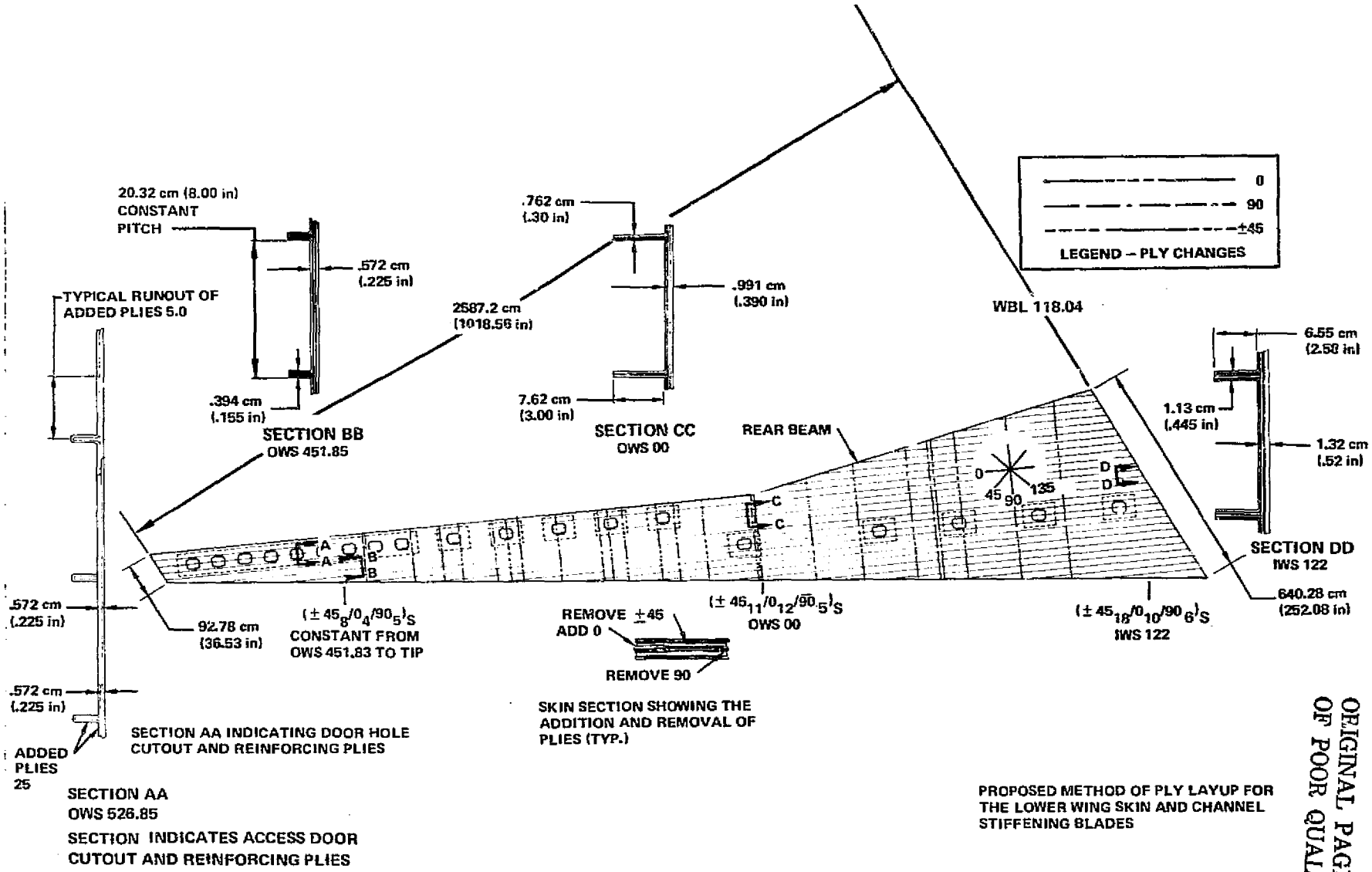

ORIGINAL PAGE IS
OF POOR QUALITY

Figure 58. General Family of Crossplied Laminates for the Lower Wing Surface

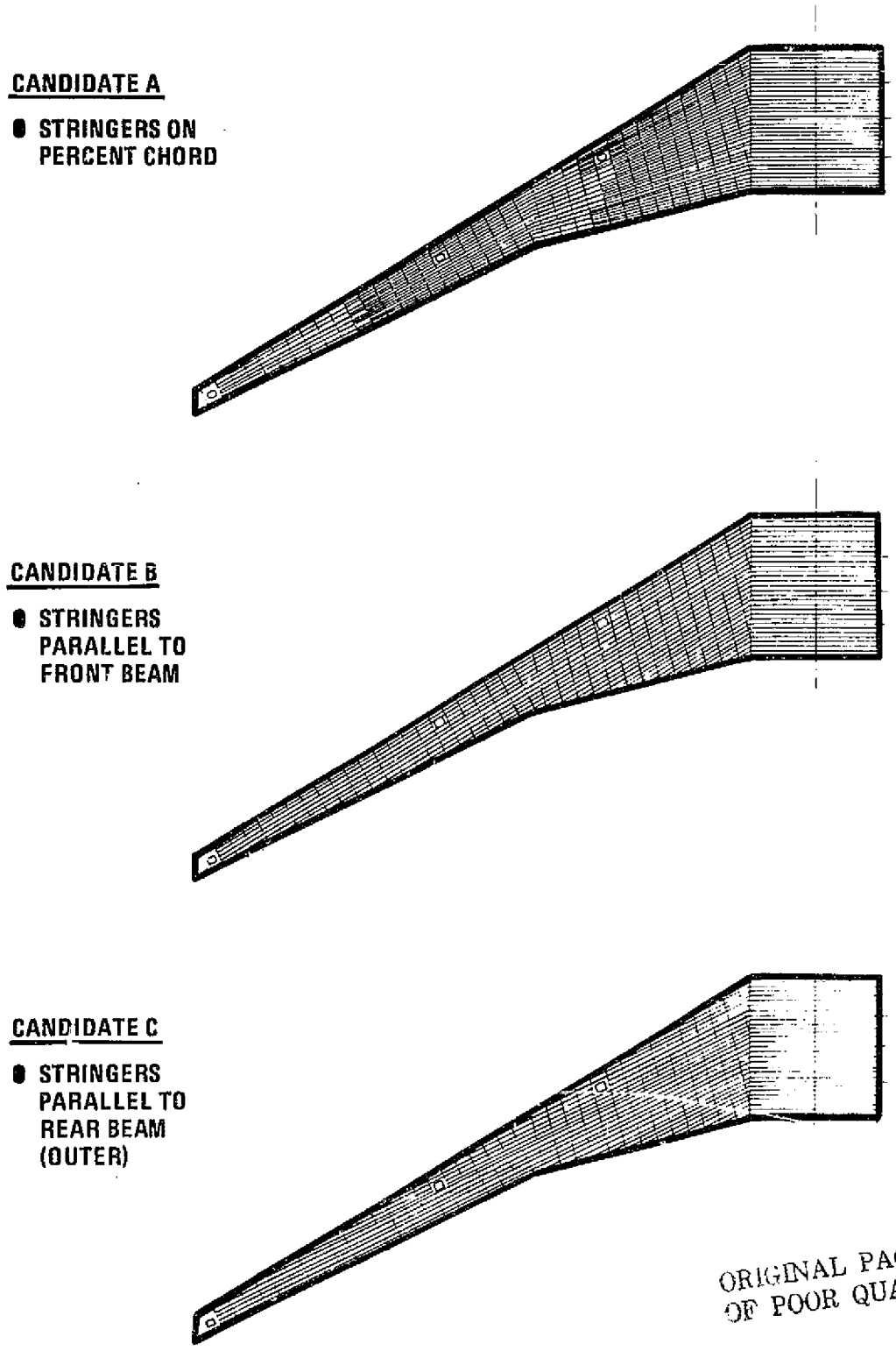

ORIGINAL PAGE IS
OF POOR QUALITY

Figure 59. Candidate Stringer Orientation

ORIGINAL PAGE IS
OF POOR QUALITY

TABLE 23. CONSIDERATIONS FOR STIFFENER ORIENTATION

CANDIDATE	DESIGN						FABRICATION	
	STRINGER RUNOUT	STRINGER JOINTS	STRINGER TWIST	RIB CLIP DESIGN	RIB ORIENTATION	ACCESS DOORS	MANDREL REMOVAL	CURE
A	NONE AT FRONT AND REAR BEAM; HOWEVER, MUST DROP STRINGERS PROGRESSIVELY OUTBD.	REQUIRED AT MOST HIGHLY LOADED REGION; INDUCED KICK LOAD.	MINIMUM TWIST; STRINGERS ON PERCENT LINE.	COMPLICATED; VARYING ANGLE OF STRINGERS WITH RIBS.	NORMAL TO ℄ STRINGER IN OUTER WING; NORMAL TO RB AT INBRD WING.	CONVERGING STRINGERS MAKE DIFFICULT DOUBLER/DOOR CONFIGURATION.	DIFFICULT/IMPOSSIBLE IF STRINGERS ARE TAPERED.	DIFFICULT FOR SINGLE STAGE CURE; SECONDARY BOND.
B	1480 IN.; REAR BEAM, INBRD AND OUTBRD. WING.	NOT REQUIRED EXCEPT TO PROVIDE VARIATION IN GEOMETRY (STEPPED OR TAPERED) WITH LOAD FOR MINIMUM MASS DESIGN.	MODERATE FOR UPPER STRINGERS; LOWER STRINGERS UP TO APPROX. 20 DEG.	STANDARDIZED RIB-TO-COVER CLIPS; STRINGER-TO-RIB CLIP REQUIRED FOR BLADE-STIFFENED DUE TO TWIST.	NORMAL TO FRONT BEAM.	PARALLEL STIFFENERS AND CONSTANT SPACING RESULTS IN LESS COMPLEX DOOR AND DOUBLER ARRANGEMENT.	MODERATE TWIST OF UPPER SURFACE STRINGERS WILL ENHANCE REMOVAL. DIFFICULT IF HATS USED FOR LOWER SURF. DESIGN DUE TO TWIST.	SINGLE STAGE CURE POTENTIAL.
C	MAXIMUM; ENTIRE FRONT BEAM AND REAR BEAM, INBD. WING.	NOT REQUIRED EXCEPT TO PROVIDE VARIATION IN GEOMETRY (STEPPED OR TAPERED) WITH LOAD FOR MINIMUM MASS DESIGN.	MODERATE FOR UPPER STRINGERS; LOWER STRINGERS UP TO APPROX. 10 DEG.	STANDARDIZED RIB-TO-COVER CLIPS; STRINGER-TO-RIB CLIP REQUIRED FOR BLADE-STIFFENED DUE TO TWIST.	NORMAL TO REAR BEAM EXCEPT AT INBOARD WING.	PARALLEL STIFFENERS AND CONSTANT SPACING RESULTS IN LESS COMPLEX DOOR AND DOUBLER ARRANGEMENT.	MODERATE TWIST OF UPPER SURFACE STRINGERS WILL ENHANCE REMOVAL. DIFFICULT IF HATS USED FOR LOWER SURF. DESIGN DUE TO TWIST.	SINGLE STAGE CURE POTENTIAL.

CANDIDATE	FABRICATION	STRUCTURAL EFFICIENCY	CONTROL SURFACE INTERFACE	COMMENTS	PREFERENCE
	TOOLING/FABRICATION				
A	SIMPLE PART TOOLING; COMPLEX ASSEMBLY TOOLS; LESS COMMON PARTS.	POTENTIALLY HEAVIER; SKIN THICKENING AS STRINGERS ARE DROPPED. STRINGER JOINT AT KICK. HEAVY RIB AT KICK.	SIMPLIFIED BACK UP FITTING DESIGNS AT FRONT AND REAR BEAMS.	APPEARS TO BE A MORE COMPLEX DESIGN THAT IS POTENTIALLY HEAVIER. SOME OF THE PROBLEMS CAN BE MINIMIZED BY HAVING STRINGERS ON PERCENT LINE OUTBOARD AND CONTINUING THEM INBRD. WITHOUT A BREAK.	3
B	MODERATE TWIST MAKE RELATIVELY SIMPLE PART TOOL; PARALLEL STRINGERS, RT. ANGLES, CONSTANT ANGLES RESULTS IN RELATIVELY SIMPLE ASSY. TOOLS.	STRINGERS INTERSECT REAR BEAM CAUSING KICK LOADS ALONG ENTIRE LENGTH OF BEAM. DOUBLER, CLIPS REQUIRED IN HIGHLY LOADED REAR BEAM REGION.	SIMPLIFIED BACK UP FITTING DESIGN FOR SLATS BECAUSE STRINGERS DO NOT RUN OUT AT BEAM.	THE FEATURES OF THIS CONCEPT IS GENERALLY GOOD. REAR SPAR DOG-LEG PLUS STRINGER RUN OUT AT REAR BEAM ONLY INDUCE HIGH RIB CAP REQUIREMENTS. NEED FURTHER ASSESSMENT.	2
C	MODERATE TWIST MAKE RELATIVELY SIMPLE PART TOOL; PARALLEL STRINGERS, RT. ANGLES, CONSTANT ANGLES RESULTS IN RELATIVELY SIMPLE ASSY. TOOLS	WING BENDING INDUCED LOADS GREATER NEAR THE REAR BEAM. PROVIDES FOR STRUCTURAL EFFICIENCY.	SIMPLIFIED BACK UP FITTING DESIGN FOR OUTBOARD WING TRAILING EDGE DEVICES.	MOST FAVORABLE BASED ON DESIGN REQUIREMENTS. MINIMUM STRINGER TWIST AND PROVIDES FOR STRUCTURAL EFFICIENCY (POTENTIALLY LEAST WEIGHT). REAR SPAR DOG-LEG POTENTIAL PROBLEM.	1

the preferred candidate was the latter concept, stringers parallel to the rear beam, (outboard region), because of its relatively high structural efficiency and its potential ease of manufacture.

Provisions for Access Doors: Access into the wing box structure is provided in both the upper and lower surfaces for assembly and inspection purposes. Figures 42 and 43 show typical locations of these doors for both a multi-spar and multi-rib wing structural arrangement. These drawings depict a wing which is compartmentized into two fuel tanks and contains twenty-one access doors into these tanks. The majority of these openings are approximately 29.2 x 40.6 cm (11.5 x 16.0 in). In each tank, upper surface access is provided to the fuel level control valves and the vent-system openings. Each lower surface access door is secured by an external clamp ring which is fastened to the door by flush mounted screws as shown in Figure 60. The doors have integral stiffeners and bosses which house self-locking floating insert nuts. A molded buna-U rubber seal is cemented in a groove around the edge of the door. A phenolic chaffing strip or ring is bonded outside the seal groove around the edge of the door to prevent arcing and fretting of the door on the surface panel seat. The faying surfaces of the clamp ring, access door, and surface panel will be coated to provide electrical continuity between the access door and the surface panel.

Wing Joints: The upper and lower skins are considered as one-piece panels over the entire box surface. If this is not feasible from a manufacturing standpoint, either a chordwise or spanwise joint with its added weight and cost may be necessary. A chordwise joint located near the break in the rear beam could be nearly as heavy as the production joint at the side of the fuselage due to the high load intensities. A spanwise joint would be considerably simpler, but would nevertheless add many fasteners and additional complexity to the design.

Spars. - Three design candidates were investigated for the composite spar configuration. These candidates included: (1) a single-piece spar with the stiffener integral with the web, (2) a one-piece molded spar with totally integrated stiffeners, (3) a three-piece spar where the spar caps are integral with the surface covers and the web is a separate component with integral stiffeners. The basic design features

of these candidate concepts are presented in the following text, while the possible methods of fabricating these spars and the tooling requirements were previously discussed in the section entitled Manufacturing Breakdowns.

An example of a single-piece molded spar with an integrally stiffened web is shown in Figure 61. The concept is typical for both front and rear spars. After the upper surface, front and rear spars, and ribs are assembled in the wing jig, the lower surface is added. Shims will be required to provide dimensional control of the depth of the spar. Stiffeners will be provided on the external faces of the spars for interfacing with the leading edge and trailing edge ribs.

A one-piece molded spar with the stiffeners integral with both the web and spar caps is shown in Figure 62. The advantages of one-piece construction appear to be offset by the many possible disadvantages. Working of the surfaces will most likely induce cracks in the structure at the intersection of the stiffener with the caps. In addition, this spar concept is more costly to manufacture and heavier in weight without any appreciable increase in strength. Dimensional control of the spar depth will most likely require the use of shims during assembly.

The third candidate spar concept is shown in Figure 63. This concept has spar caps that are integral with their respective wing surfaces and a separate integrally stiffened web. The web is mechanically attached to the inner flanges of the spar caps and provides for dimensional control of the wing depth during assembly. Disadvantages of this design include a greater number of fasteners required to attach the web to the caps and the basic lack of fail-safeness of the monolithic spar/cover assembly. Additional problem areas such as the peel strength of the integral caps can most likely be resolved by increasing the radius at the cover to the flange intersection. An advantage of this type of assembly is the greater dimensional control over the spar depth.

Ribs. - The internal ribs in the wing box structure can be generally classified in two categories. The first is closed or solid and is typical of the fuel tank bulkhead rib, tank divider and backup rib, MLG backup and fuel surge rib, and inboard tank bulkhead. The other category includes ribs that are open or have penetrations between bays. In this category are backup ribs, intermediate ribs, flap actuator ribs, MLG backup ribs, and rear spar kick ribs.

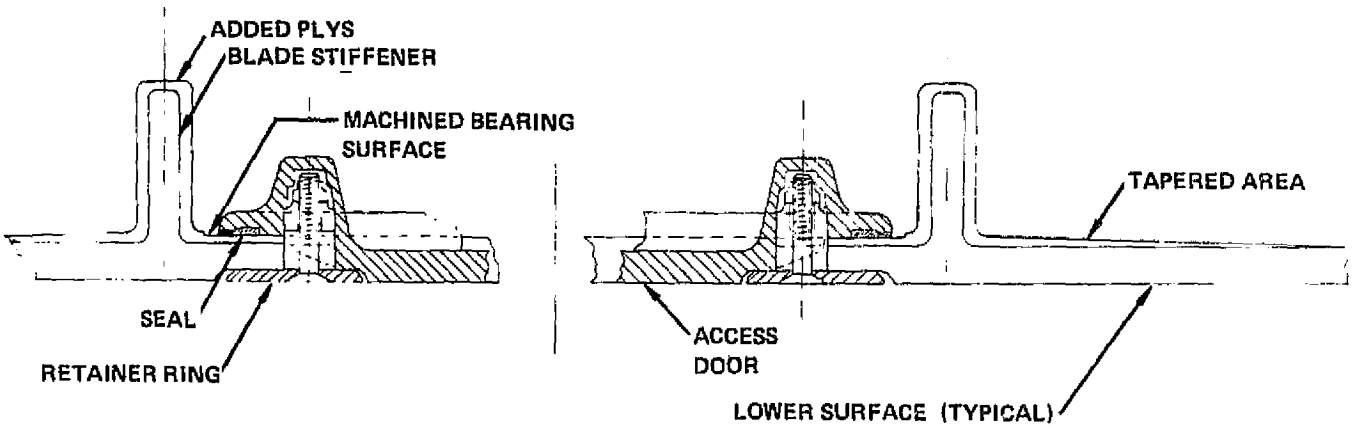

Figure 60. Typical Clamp-Type Wing Lower Surface Access Door

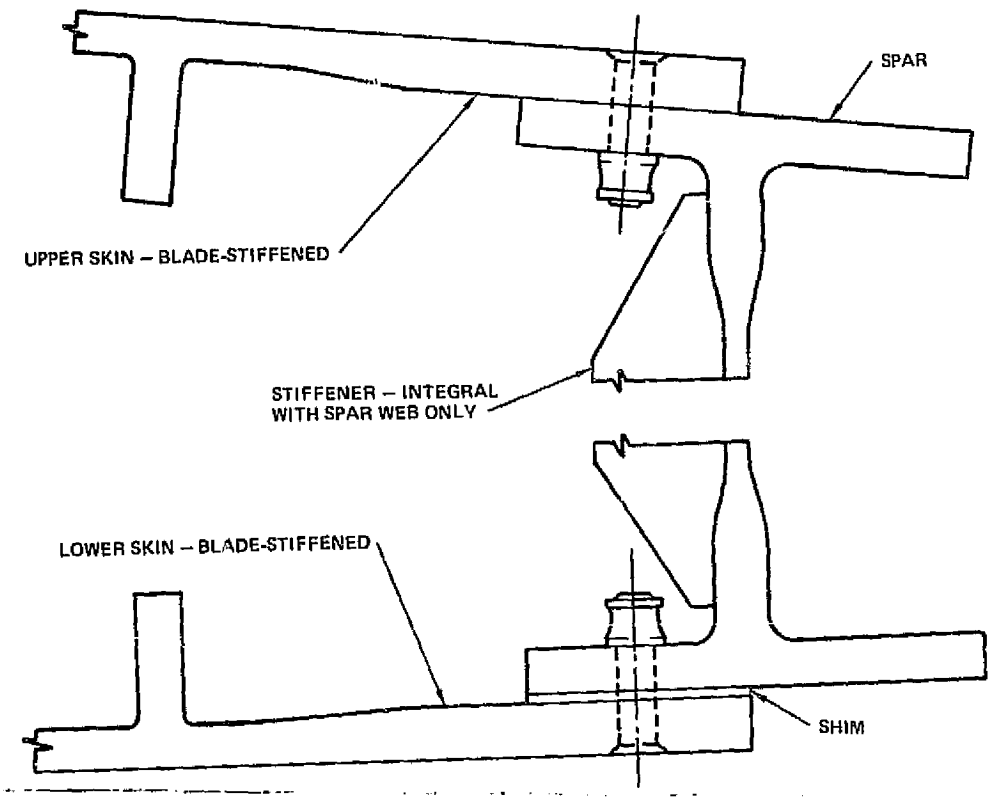

Figure 61. Single-Piece Spar with Integrally Stiffened Web

ORIGINAL PAGE IS
OF POOR QUALITY

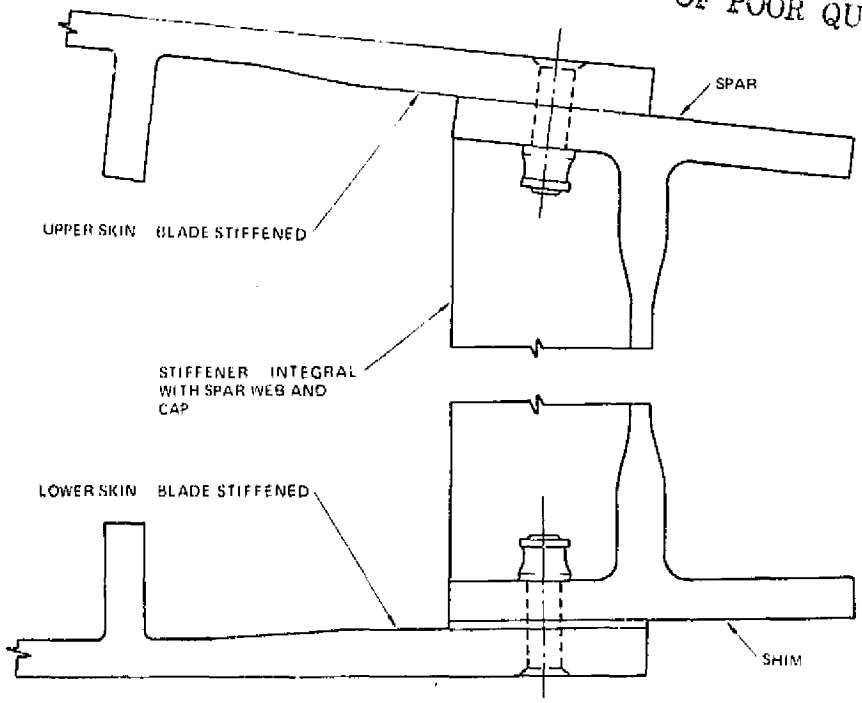

Figure 62. One-Piece Molded Spar

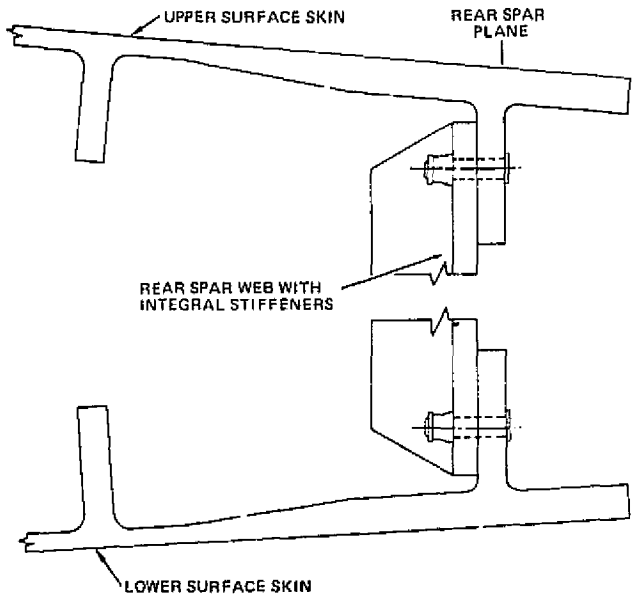

Figure 63. Spar Caps Integral with Surfaces, Separate Integrally Stiffened Webs

Two closed rib designs were evaluated during this study. The first design, shown in Figure 64, is a typical skin/stiffener configuration. The other configuration utilizes a beaded web for stiffening (Figure 65). Both of these designs would include the cocuring of the web, caps and stiffeners (for the first design) into an assembly to reduce the amount of mechanical fasteners required. The method of sealing the fuel tank bulkhead ribs and maintaining dimensional control of the wing box during assembly are problem areas requiring additional study. The dimensions of the stiffeners on the web and the design of the rib cap will have to be predicated on the applied fuel pressure and crushing loads. For the skin/stiffener rib, Figure 64, alternate integral design approaches could be taken to alleviate the peeling problem due to fuel pressure.

The majority of the ribs are required to be of the opened web variety to provide for the unrestricted flow of fuel in each tank and to allow for accessibility for manufacturing and maintenance purposes. An illustration of an open rib is shown in Figure 66; the rib web, caps, stiffeners, and cutout doublers are cocured. An alternate open rib with more and larger cutouts is shown in Figure 67. A typical open truss rib is presented in Figure 68. The rib caps and trusses would be composite material. The trusses of constant cross-section would be pultrusions or other mass production method. Similar to the closed web designs, the detail design of specific regions (e.g., flange to web intersection and the reinforcement of holes) would reflect the actual load environment experienced during service. The dimensional control of the wing thickness will most likely require the addition of shims for all the web designs. To alleviate this problem, especially in the case of the truss-type rib, one of the rib caps could be mechanically fastened to the truss members.

Wing Manufacturing Joint. - The location and the design of the wing production joint are two design aspects that can greatly influence the weight and cost of the wing. Factors that should be considered during the design process are: the surface load intensity, fuel tank sealing requirements, the basic geometry of the structural box, and the mating of large subcomponents fabricated in separate tooling fixtures.

Four spanwise locations were investigated to the wing production joint. The locations of these joints are shown in Figure 69 and can be described as follows:

ORIGINAL PAGE IS
OF POOR QUALITY

ORIGINAL PAGE IS
OF POOR QUALITY

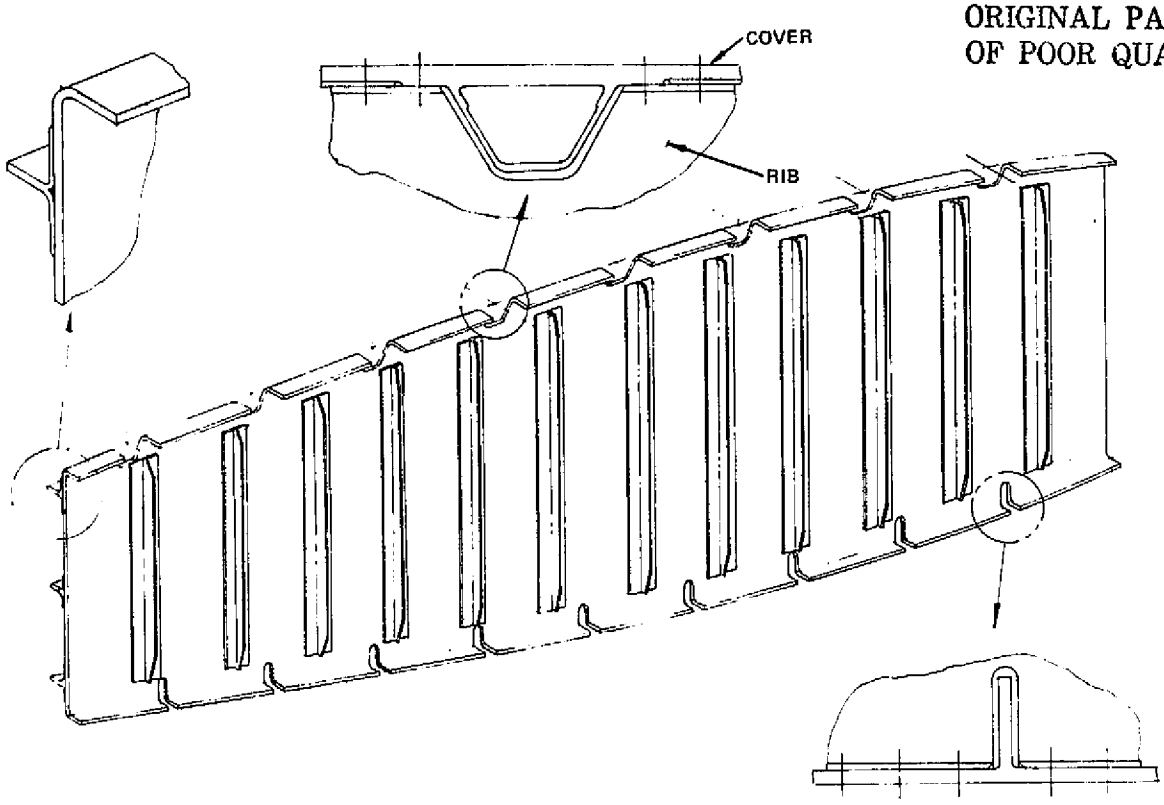

Figure 64. Skin/Stringer Rib Concept

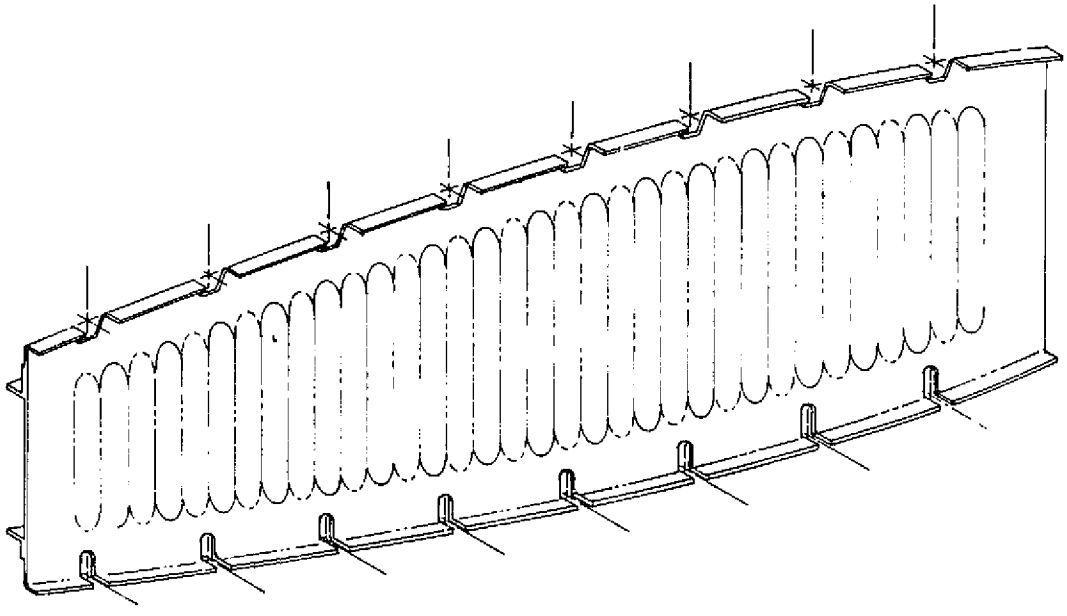

Figure 65. Circular-Arc Rib Concept

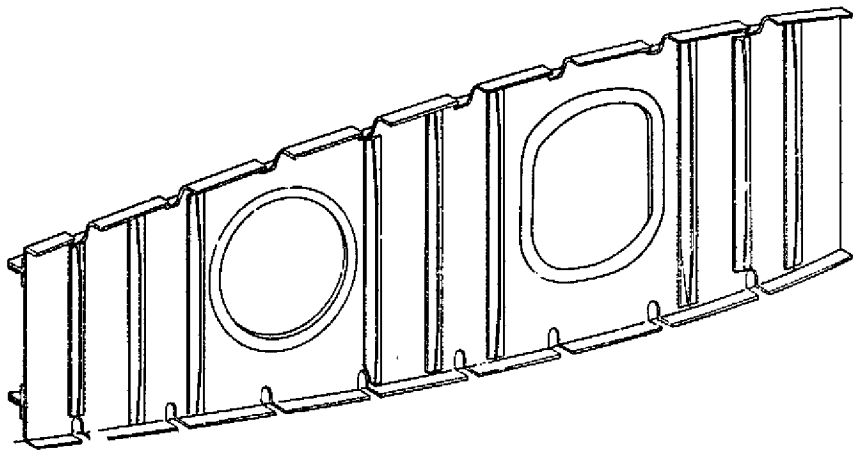

Figure 66. Typical Open Rib Concept

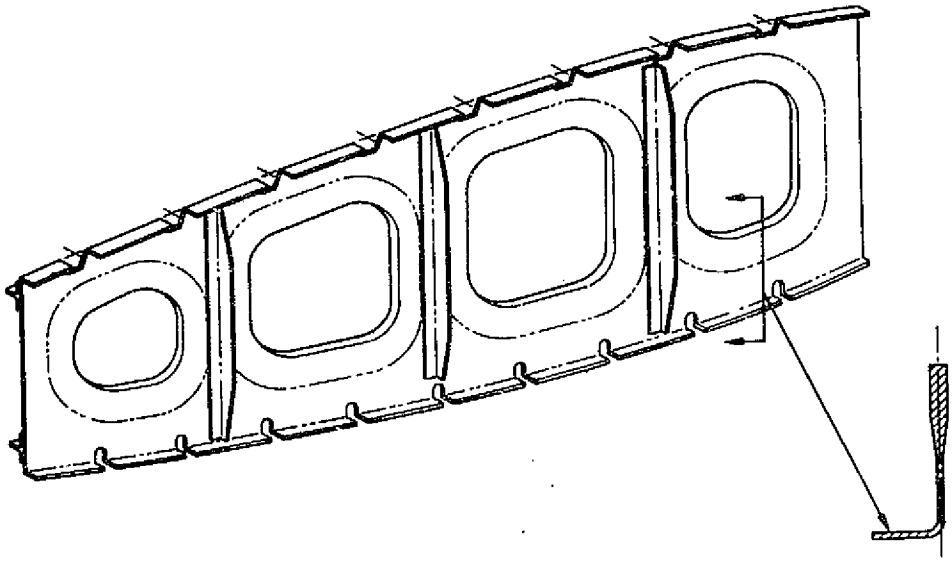

Figure 67. Alternate Open Rib Concept

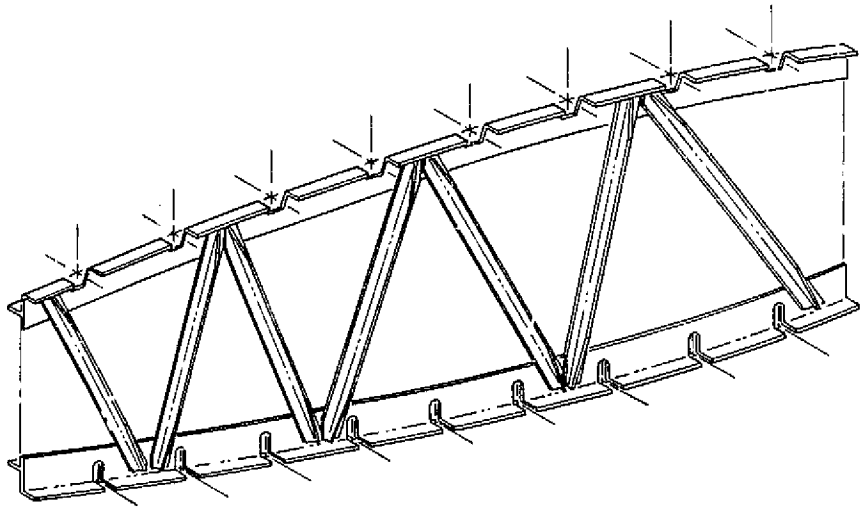

Figure 68. Truss Rib Concept

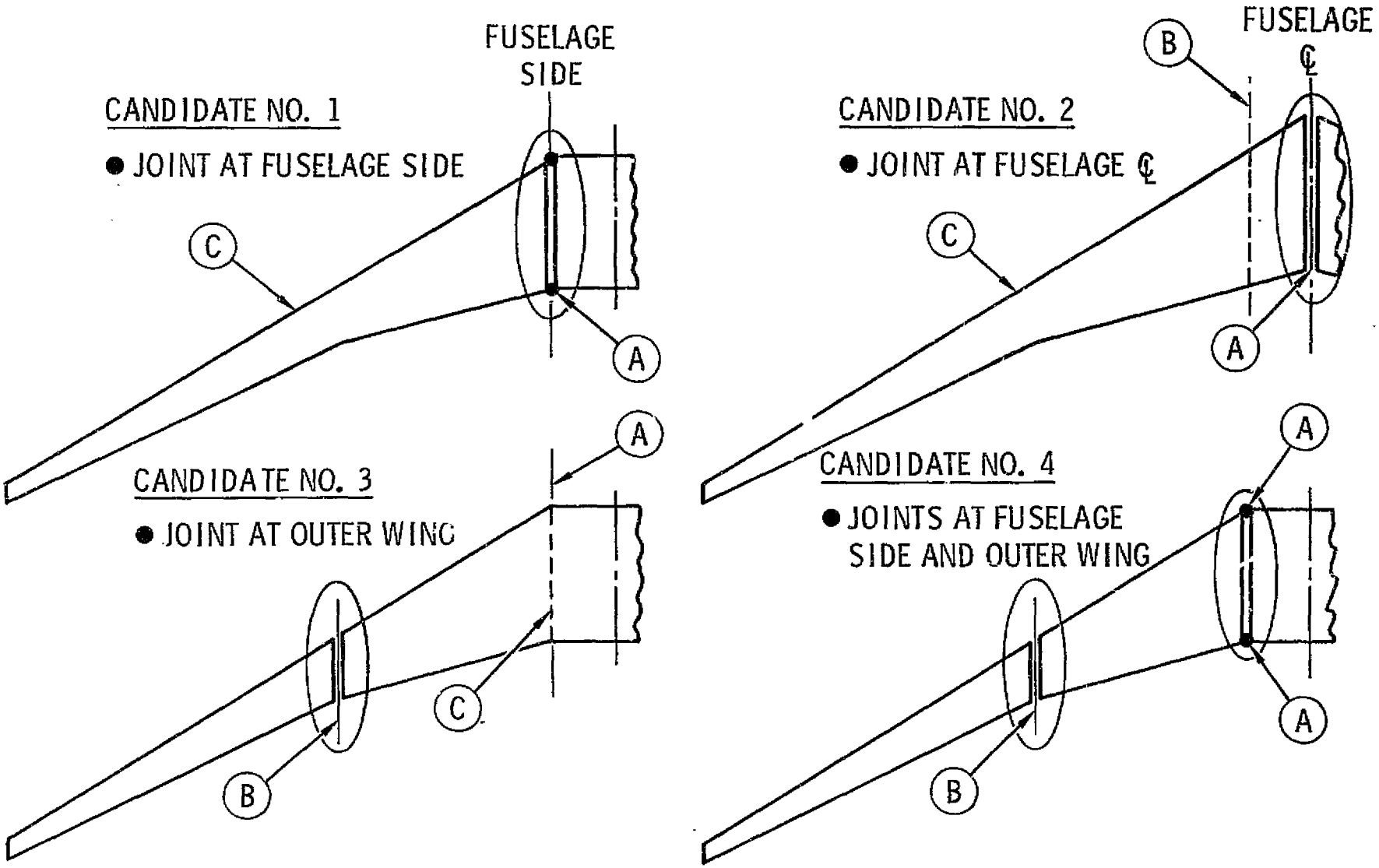

Figure 69. Candidate Manufacturing Joints

candidate 1 has the joint at the fuselage side, candidate 2 at the fuselage centerline, candidate 3 in the outer wing, and candidate 4 has joints at the fuselage side and in the outer wing. Advantages and disadvantages of these candidate joint locations are presented in Table 24. Candidate 1 is the preferred location. It results in simplified structural attachment at the front and rear beams, requires less floor space in final assembly, and permits the outer wing to be completely tank sealed prior to final assembly. These design features potentially provide for the lowest cost and lightest weight joints with the most favorable manufacturing options.

The design of the production joint at the preferred location was the next design aspect investigated. The major effort in the joint design study was in conceptualizing shear-type joints. All current large aircraft have shear joints at the side of the fuselage because of the weight advantage over tension joints; however, the shear-type joint tends to be more complicated and costly to produce. Therefore, alternate wing-to-fuselage production joints employing tension-type of interface were investigated.

An example of an upper surface shear joint at the side of the fuselage is shown in Figure 70. The hat-stiffeners are carried across the joint by attaching the crown and webs of the stiffener to the rib cap through angle clips and a channel section. All fasteners are installed in the outer wing box and the box completely tank sealed prior to mating with the center section in final assembly. The tank bulkhead at the joint is part of the outer wing. During wing mate, tapered chordwise shims are installed between the center section skins and the outside splice plate to account for tolerances and variation in contours between these large assemblies. The rib cap, outer splice plate, tapered shim, and fuselage spanwise skate angle are titanium. The angle clips and channel sections also are titanium.

Figure 71 illustrates an alternate upper surface shear joint. Continuity of the hat-stiffeners across the joint is provided by bringing the crown of the hat-stiffener down to the surface by phasing out the side wall and local skin thickening. The crown and flange of the hat-stiffener and wing skin then fit between the titanium rib cap and wing splice plate. Tapered chordwise shims are again provided for alignment purposes and to avoid preloading.

TABLE 24. ASSESSMENT OF MANUFACTURING JOINT LOCATION

CANDIDATE	DESCRIPTION	ADVANTAGE	DISADVANTAGE	COMMENTS
NO. 1	JOINT AT FUSELAGE SIDE.	(A) WING STRUCTURAL ATTACHMENT TO THIS FUSELAGE SIMPLIFIED WITH FUSELAGE FRAMES IN THE SAME PLANE AS THE FRONT AND REAR BEAM. (B) CENTER SECTION IS PART OF THE FUSELAGE ASSEMBLY REQUIRING LESS FLOOR SPACE IN FINAL ASSEMBLY; FUSELAGE PRESSURE TESTS CAN BE PERFORMED IN FUSELAGE ASSEMBLY STATION. (C) OUTER WING CAN BE COMPLETELY TANK SEALED PRIOR TO FINAL ASSEMBLY.	(C) OUTER WING IS IN EXCESS IN LENGTH TO CURRENTLY AVAILABLE AUTOCLAVES. ADDITIONAL FACILITY REQUIREMENTS.	PREFERRED CANDIDATE. POTENTIALLY LOWEST COST AND PROVIDES THE MOST FAVORABLE MANUFACTURING OPTIONS.
NO. 2	JOINT AT FUSELAGE CENTER LINE.	(A) SINGLE MANUFACTURING JOINT.	(A) HIGH KICKLOADS AT THE ℄ OF THE AIRPLANE. MUST BE REACTED AT FUSELAGE SIDE. (B) FUSELAGE CANNOT BE PRESSURE TESTED UNTIL WING IS ATTACHED OR A SPECIAL TEST JIG IS INSTALLED AND LATER REMOVED. (A), (B) WING MUST BE JOINTED TO THE FUSELAGE SOONER ON ASSEMBLY LINE, REQUIRING MORE FLOOR SPACE AND MORE DETAIL WORK LATER ON THE FINAL ASSEMBLY LINE.	MANUFACTURING COMPLEXITY; REQUIRES MORE FLOOR SPACE IN THE ASSEMBLY BUILDING; ADDITIONAL FACILITIES REQUIREMENT.
NO. 3	JOINT AT OUTER WING LOCATION.	(A) FUSELAGE CAN BE PRESSURE TESTED IN FUSELAGE ASSEMBLY STATION.	(A), (C) WING TO FUSELAGE ATTACHMENT MUST BE COMPLETED EARLIER ON ASSEMBLY LINE REQUIRING MORE FLOOR SPACE THAN NO. 1. MORE DETAIL WORK MUST BE PERFORMED LATER ON THE FINAL ASSEMBLY LINE. (B) OUTBOARD JOINT IS AN ADDED SOURCE OF DRAG. (C) THE CHANGE IN DIRECTION OF SURFACE PANEL STIFFENING AND FRONT/REAR BEAMS REQUIRE A JOINT.	MANUFACTURING COMPLEXITY; REQUIRES MORE FLOOR SPACE THAN NO. 1 BUT LESS THAN NO. 2.
NO. 4	JOINT AT FUSELAGE SIDE AND OUTER WING.	SIMILAR ADVANTAGES AS NO. 1.	(A), (B) FOUR (4) MANUFACTURING JOINTS; SOURCE OF ADDED WEIGHT, TOOLING AND COST. (B) OUTBOARD JOINT IS AN ADDED SOURCE OF DRAG.	NO ADVANTAGE OVER NO. 1 AND SHOULD NOT BE CONSIDERED UNLESS OUTER WING PANEL IS TOO LARGE TO HANDLE OR TRANSPORT.

ORIGINAL PAGE IS OF POOR QUALITY

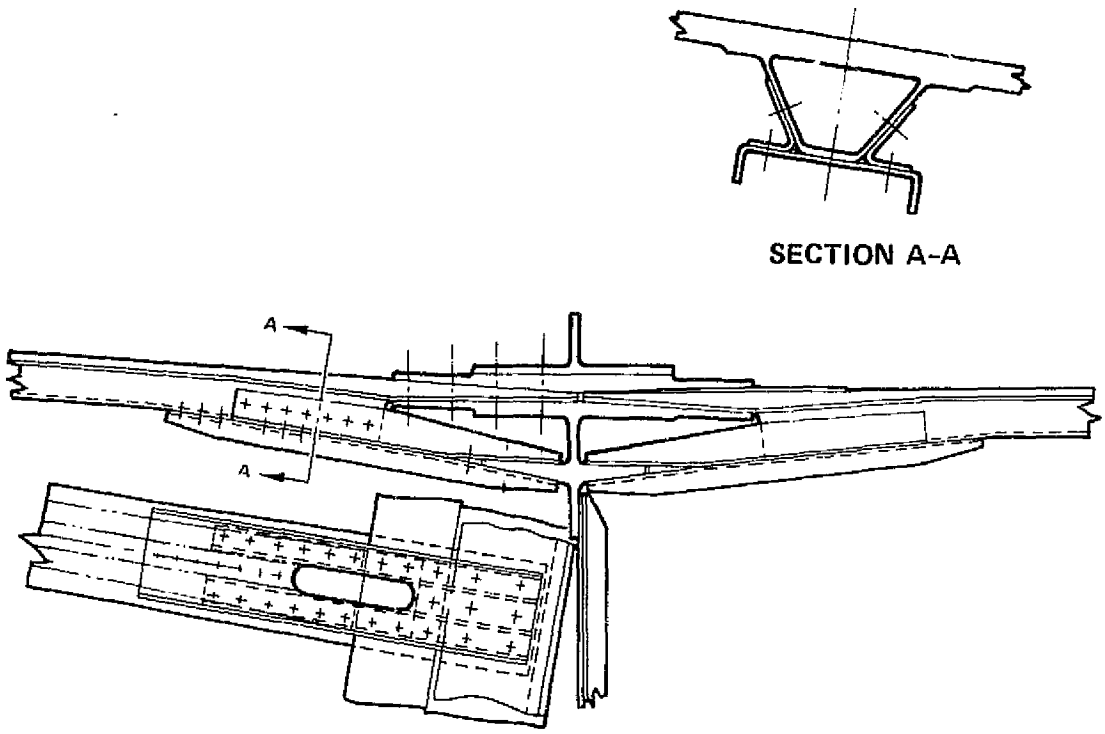

Figure 70. Composite Wing Production Joint Concept - BL118, Upper, for Hat-Stiffened Covers

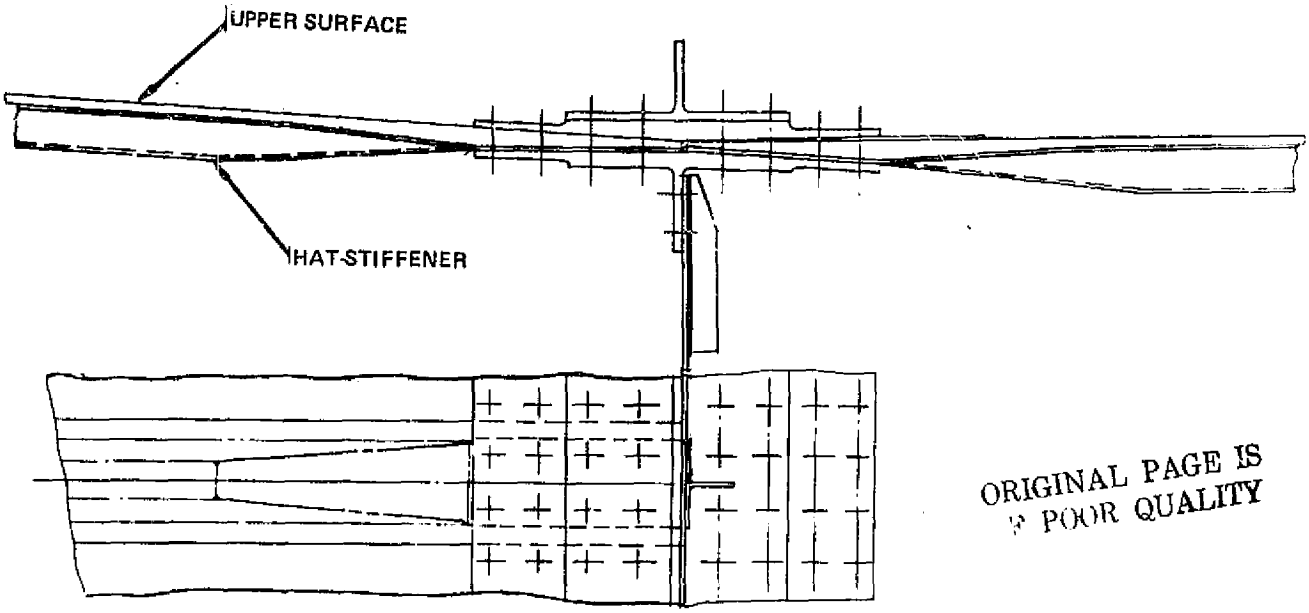

ORIGINAL PAGE IS
OF POOR QUALITY

Figure 71. Composite Wing Production Joint Concept - BL118, Upper, Alternate for Hat-Stiffened Covers

If the stiffener design is altered a simpler upper surface shear joint is possible. Figure 72 presents a typical shear joint for a blade-stiffened panel concept with the stiffeners carried through the wing-body interface. This joint requires fewer parts with more accessible fasteners.

A design concept for a lower surface production shear joint at the wing-to-fuselage intersection is shown in Figure 73. The blade-stiffeners which are an integral part of the lower surface assembly run out before the skin splice. Alignment of the stiffeners in the outer wing and center section assemblies are maintained. The induced kick-loads resulting from the change in direction of the structural members are reacted by the rib structure.

A tension-type joint applicable to both upper and lower surfaces is conceptulized in Figure 74. The layout suggests the separate construction of a joint assembly in the form of a long tapered composite unit. The unit includes a load distribution bar of titanium through which, in equal chordwise spacings, alloy steel bolts are used to attach the wing to a mating joint assembly on the center section. The bolts are positioned through slots in the outer surface of the skins. The tension strap is wrapped around the load distribution bar to taper away on the end of the joint assembly. The finished joint assembly is finally laid up with the surface skin and the outer laminates of that skin interleaved at the outer edge before final cure.

Wing Box/Main Landing Gear Interface.- The main landing gear support structure, see Figure 75, is a torque box cantilevered from the rear spar, and landing loads are transferred via this box into the wing through a combination shear-tension joint. Large tension bolts penetrate the spar and transfer load into internal fittings attached to the backup ribs. Thus, the main landing gear is located aft of the fuel tanks and is attached to its supporting structure in a manner that provides for a controlled breakaway in the event of a crash landing. The main landing gear trunnion fitting is a high heat treat steel forging. The landing gear torque box structure is planned as a composite assembly, but will require considerably design effort to arrive at a final configuration. The upper and lower surfaces of the wing box, in the vicinity of the landing gear, will be comprised of relatively thick laminates to meet the strength and stiffness requirements.

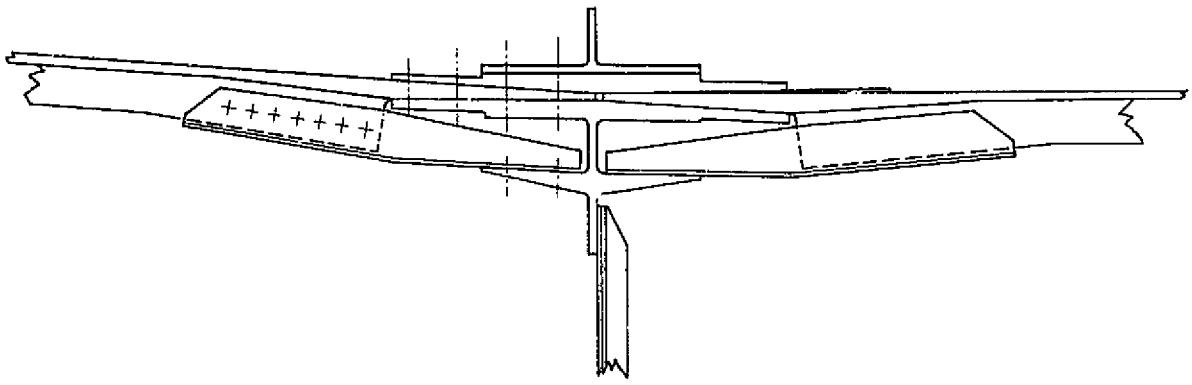

Figure 72. Composite Wing Production Joint Concept - BL118, Upper, for Blade-Stiffened Covers

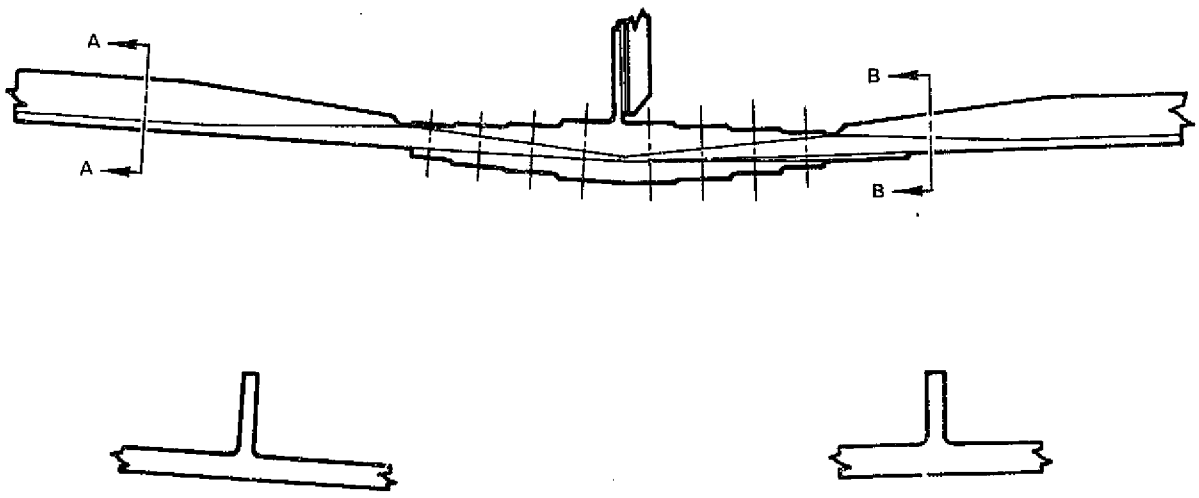

ORIGINAL PAGE IS
OF POOR QUALITY

Figure 73. Composite Wing Production Joint Concept - BL118, Lower, for Blade-Stiffened Covers

ORIGINAL PAGE IS
OF POOR QUALITY

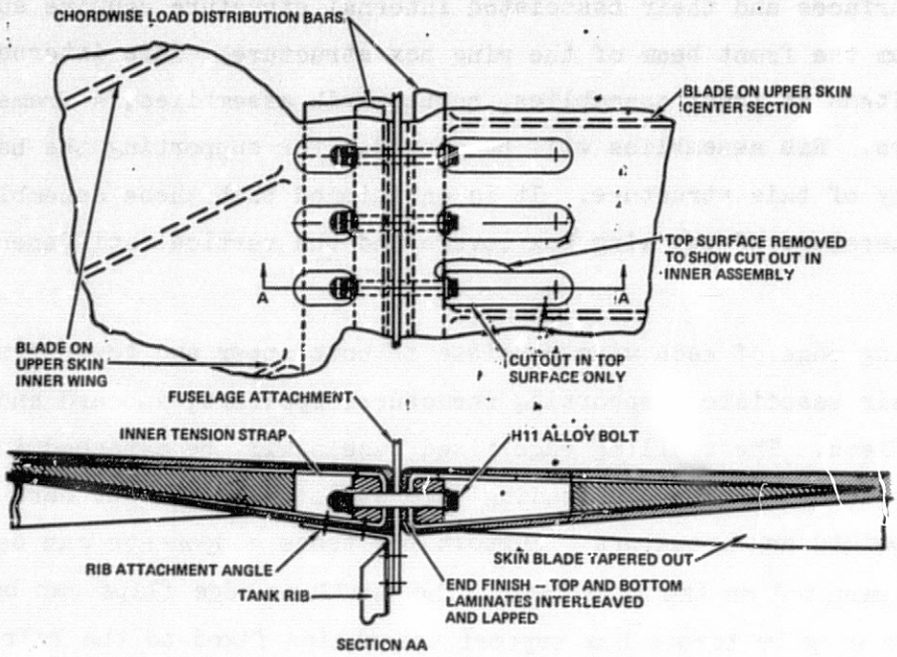

Figure 74. Tension-type Composite Wing Production Joint Concept - BL118, Upper, for Blade-Stiffened Covers

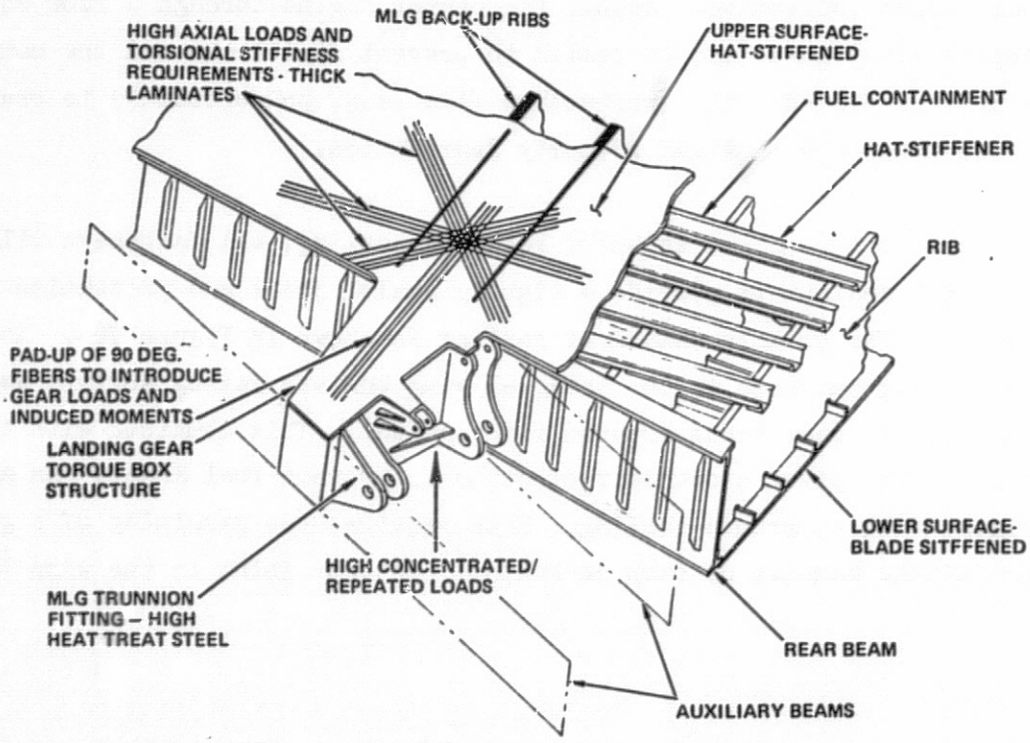

Figure 75. Wing Box/Main Landing Gear Interface

Wing Leading and Trailing Edge Interface. - Both fixed and movable (slats) leading edge surfaces and their associated internal structure require support in some manner from the front beam of the wing box structure. This internal structure includes such items as track assemblies, snubber rib assemblies, A-frame supports, and access doors. Rib assemblies will be provided for supporting the basic surfaces and the majority of this structure. It is envisioned that these assemblies will be attached to extensions of the wing box covers and the vertical stiffeners on the beam structure.

The trailing edge of each wing consists of both upper and lower fixed surface panels with their associated supporting structure, spoilers, inboard and outboard ailerons, and flaps. The trailing edge fixed panels will be attached in a manner similar to that described for the leading edge structure. The outboard ailerons require hinge points and actuators. Support for those components can be provided by ribs which are mounted on the rear beam. The trailing edge flaps can be attached to the wing by torque box support assemblies fixed to the rear beam.

Fuel Tank Sealing.- The fuel system consists of four integral wing tanks, two per side, with the inboard tank supplying the wing pylon mounted engines and the two outboard tanks collectively supply the center engine through a flow equalizer. These integral wing tanks must be sealed to prevent fuel leaks and the composite structure must be coated with a protective film (e.g. polyurethane) to prevent moisture absorption and material property degradation.

Regardless of the method selected for tank sealing, all fasteners will be installed with wet sealant to provide a tightly sealed joint and protection for dissimilar metals. The primary method of sealing is shown in Figure 76a. In this method all joining surfaces in the integral wing box are faying surface sealed, fillet sealed, and the fastener heads covered with sealant. This combined with the fasteners being wet installed gives a double protection to prevent fuel leaks. An alternative method, Figure 76b, is groove sealing. This requires the machining of a groove in one of the joining members of each mechanical fastener joint in the wing tank.

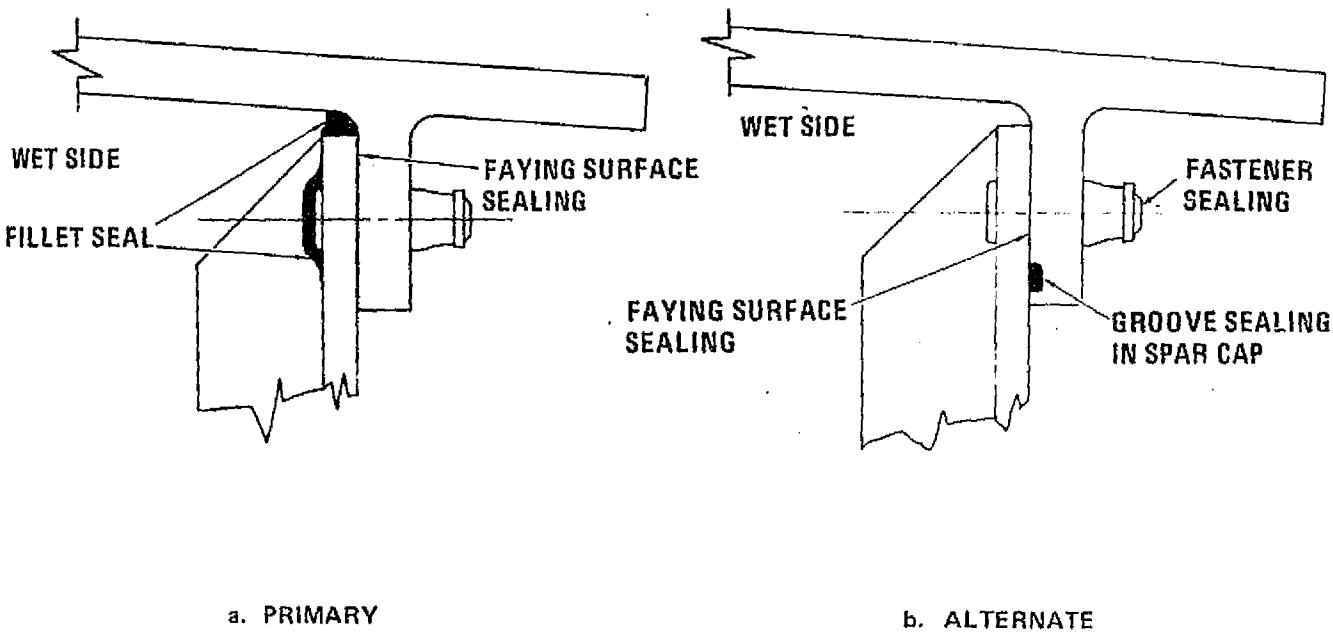

Figure 76. Fuel Tank Sealing Concepts

APPENDIX B

TECHNOLOGY NEEDS

An important part of the study program was the identification of technology and data needed to support the introduction of advanced composite materials into the wing structure of future production aircraft, and the definition of approaches for their development. The identification of these technology needs was based on an assessment of current technology and its applicability to composite wing structure, and the design aspects and requirements unique to the use of composites in commercial aircraft wing structure, some of which were identified during the conceptual design investigations (Appendix A).

Development Needs and Anticipated Advances

Initially, the identification of technology needs was addressed in terms of five technology areas: design/analysis, materials and producibility, manufacturing, quality assurance, and product support. Significant technology deficiencies or problems were identified for each of these areas and grouped in terms of types (or categories) of needs. Table 25 presents a summary of the results of this effort. Included are brief descriptions of: the technical problems or state-of-the-art, and the development needed for solution; and, in some instances, the anticipated technical advances by 1985, and the rationale or basis for this expectation.

Essential Technology Development

The development needs and anticipated advances which were identified by the technology areas were then integrated into a unified definition of technology developments considered essential for the application of composites in primary wing structure. In addition, the general approaches necessary to effect the development of these technologies were identified. These essential technology developments are summarized in Table 26. The development needs and approaches are defined in terms of the following categories:

- Design analysis methods and data
- Preliminary design
- Design development and verification
- Composite materials, processes, testing and control
- Producibility/fabrication methods
- Manufacturing plans
- Quality assurance methods
- Non-destructive manufacturing inspection
- In-service inspection
- In-service repair

In general, the need for engineering/manufacturing studies; manufacturing development; development testing, which includes design/analysis data, concept development, and design verification; and material development was indicated. These data provide the basis for the formulation of a detailed plan for the composite wing development program.

TABLE 25. SUMMARY OF DEVELOPMENT NEEDS AND ANTICIPATED ADVANCES

TECHNOLOGY AREA/CATEGORY	PROBLEM/CURRENT STATE OF THE ART	DEVELOPMENT NEEDED FOR SOLUTION	ANTICIPATED ADVANCES	RATIONALE OR BASIS FOR EXPECTATION
DESIGN ANALYSIS TECHNOLOGY DESIGN CRITERIA AND REQUIREMENTS	• COMPOSITE MATERIAL STRUCTURES REQUIRE ADDITIONAL DESIGN CRITERIA:	• REVIEW/COMPILE APPLICABLE CRITERIA AND REQUIREMENTS FOR COMPOSITE AIRCRAFT STRUCTURES. DIRECT ONGOING ACEE COMPOSITE STRUCTURES AND TECHNOLOGY PROGRAMS AT COMMERCIAL AIRCRAFT APPLICATION OF GR/E.		
	o MOISTURE, TEMPERATURE, AND ULTRAVIOLET RADIATION SENSITIVITY; COMMERCIAL AIRCRAFT OPERATE IN ALL PARTS OF THE WORLD IN A WIDE RANGE OF ENVIRONMENTAL CONDITIONS. ESTABLISHMENT OF A REASONABLE DESIGN CRITERIA FOR ENVIRONMENTAL FACTORS IS REQUIRED.	• ADDITIONAL CLIMATOLOGICAL DATA COLLECTION AND EVALUATION; LONG-TERM DURABILITY TESTS AND ACCELERATED ENVIRONMENTAL TESTS ARE REQUIRED TO ESTABLISH DATA BASE AND BETTER UNDERSTANDING TO FORMULATE CRITERIA FOR COMPOSITE MATERIALS APPLICATIONS TO PRIMARY WING STRUCTURE.	• ADDITIONAL DATA PROVIDING CORRELATION OF REAL-TIME AND ACCELERATED ENVIRONMENTAL TESTS. ADDITIONAL CLIMATOLOGICAL DATA GATHERING.	• CURRENTLY CONSIDERABLE INDUSTRY ACTIVITY INCLUDING NASA PROGRAM. ENVIRONMENTAL EXPOSURE EFFECTS ON COMPOSITE MATERIALS FOR COMMERCIAL AIRCRAFT; WILL PROVIDE DATA FOR CURRENT GRAPHITE-EPOXY MATERIAL SYSTEMS.
	o FOREIGN OBJECT DAMAGE SENSITIVITY; DESIGN STRAIN LEVELS ARE BEING LIMITED TO APPROXIMATELY 50-PERCENT OF THE COMPOSITE MATERIAL FAILURE STRAIN.	• DEFINITION OF HAZARDS; CRITERIA (FREQUENCY OF OCCURRENCE, SIZE, IMPACT VELOCITY), VULNERABLE AREAS AND LOADING CONDITION AT IMPACT. ESTABLISHMENT OF LEVEL OF INSPECTABILITY REQUIRED TO DETECT DAMAGE AND ASSESS EFFECTS ON STRENGTH AND DURABILITY.	• NUMEROUS GOVERNMENT AND INDUSTRY PROGRAMS ARE FORMULATING DESIGN CRITERIA FOR COMPOSITE WING BOX STRUCTURES. ADDITIONAL TEST DATA ON THICK LAMINATES REPRESENTATIVE OF WING COVERS, IDENTIFICATION OF DAMAGE MECHANISMS, IMPACT DAMAGE TESTS, AND DURABILITY TESTING UNDER STATIC AND CYCLIC LOADING AND ENVIRONMENT WILL PROVIDE AN EXPANDED DATA BASE.	• A NASA PROGRAM HAS BEEN INITIATED FOR THE EVALUATION OF THE DURABILITY AND DAMAGE TOLERANCE OF COMPOSITE STRUCTURES SUITABLE FOR COMMERCIAL TRANSPORT AIRCRAFT. SUCCESSFUL EXECUTION WILL PROVIDE DATA BASE FOR CURRENT GRAPHITE-EPOXY MATERIAL SYSTEM.
	• DAMAGE TOLERANCE DESIGN; UNLIKE METAL STRUCTURES, DAMAGED COMPOSITE STRUCTURE IS PROBABLY MORE CRITICAL UNDER COMPRESSIVE LOADING THAN UNDER TENSION LOADING. ALSO COMPOSITE STRUCTURES MUST BE DESIGNED TO MINIMIZE INTERLAMINAR STRESSES IN THE DAMAGED CONDITION. RESTRICTION OF DESIGN STRAIN LEVELS AND INCORPORATION OF MECHANICAL FASTENERS THROUGH THE COMPOSITE ELEMENTS AT CRITICAL LOCATIONS ARE CURRENTLY BEING USED TO MEET THIS NEED.	• IT IS MANDATORY THAT ADEQUATE DAMAGE TOLERANCE PROVISIONS BE INCORPORATED IN DESIGN. ADDITIONAL DATA ARE REQUIRED, BOTH ANALYTICAL AND EXPERIMENTAL, INCLUDING THE EFFECT OF SPLICES AND MECHANICALLY FASTENED JOINTS TO PROVIDE DAMAGE TOLERANCE CAPABILITY WITHOUT SIGNIFICANT WEIGHT PENALTY.	• THE DATA BASE IS CONTINUALLY BEING EXPANDED THROUGH GOVERNMENT AND INDUSTRY R&D PROGRAMS. HOWEVER, ADDITIONAL PROGRAMS DIRECTED TOWARDS REPRESENTATIVE WING PANEL DESIGNS, SPLICES AND JOINTS ARE NEEDED TO ESTABLISH CRITERIA AND REQUIREMENTS FOR THE INFLUENCE OF BOTH DURABILITY AND DAMAGE TOLERANCE ON THE DESIGN PROCESS OF WING PRIMARY STRUCTURE.	• CURRENTLY CONSIDERABLE ACTIVITY BY BOTH GOVERNMENT AND INDUSTRY.

ORIGINAL PAGE IS OF POOR QUALITY

TABLE 25. SUMMARY OF DEVELOPMENT NEEDS AND ANTICIPATED ADVANCES (Continued)

TECHNOLOGY AREA/CATEGORY	PROBLEM/CURRENT STATE OF THE ART	DEVELOPMENT NEEDED FOR SOLUTION	ANTICIPATED ADVANCES	RATIONALE OR BASIS FOR EXPECTATION
ANALYSIS METHODS	• POOR ANALYSIS/TEST CORRELATION – HIGH TEST SCATTER, UNKNOWN SCALE EFFECTS.	• TEST PROGRAMS DESIGNED TO EXPAND SPECIFIC DATA BASES AND SUPPORT DEVELOPMENT AND CORRELATION OF IMPROVED ANALYSIS METHODS – INCLUDING STATIC STRENGTH, BUCKLING AND POST-BUCKLING, FATIGUE, AND FAIL-SAFETY. IDENTIFICATION OF FACTORS THAT RESULT IN TEST SCATTER.	• THE TEST DATA BASE IS BEING CONTINUALLY EXPANDED BY GOVERNMENT AND INDUSTRY TEST PROGRAMS; BOTH R&D AND DESIGN PROJECT TESTING. HOWEVER, ADDITIONAL PROGRAMS SPECIFICALLY DIRECTED TOWARDS DEVELOPMENT AND CORRELATION OF IMPROVED ANALYSIS METHODS ARE NEEDED.	• THERE ARE MANY GOVERNMENT AND INDUSTRY SPONSORED TEST PROGRAMS.
	• INADEQUATE TEST DATA AND ANALYTICAL METHODS FOR RATIONALLY DESIGNING FOR DURABILITY AND DAMAGE TOLERANCE.			
	• POOR UNDERSTANDING OF EFFECTS OF NORMAL TENSION AND SHEAR, AND TRANSVERSE SHEAR DEFORMATION.	• FUNDAMENTAL TEST DATA, INCLUDING DEFINITION OF MATERIAL PROPERTIES IN THE THIRD DIMENSION. DEVELPMENT OF IMPROVED TEST METHODS.		
	• SEMI-EMPIRICAL JOINT DESIGN APPROACHES ARE INADEQUATE, BOTH FOR LOAD DISTRIBUTION AND FAILURE STRENGTH.	• DEVELOPMENT OF IMPROVED ANALYSIS METHODS CORROBORATED BY TEST DATA, FOR BOTH BONDED AND MECHANICAL JOINTS.		• AN AIR FORCE PROGRAM ON THIS SUBJECT IS IMMINENT.
PRELIMINARY DESIGN	• SHOULD THE WING CONSIST OF MONOLITHIC COMPOSITE STRUCTURE, OR BUILT-UP COMPOSITE SECTIONS?	• ADDITIONAL DESIGN AND ANALYSIS OF LARGE HIGH ASPECT RATIO COMPOSITE WINGS. THESE DESIGN PROBLEMS WILL REQUIRE A GREAT DEAL OF CONCEPTUAL DESIGN, CREATIVE IDEAS, AND NEW THOUGHT ON HOW TO PRODUCE INEXPENSIVE TAPERED AND CONSTANT SECTIONS IN COMPOSITES. MANY ALTERNATIVE DESIGNS WILL HAVE TO BE LAYED OUT, ANALYZED, FABRICATED, AND TESTED TO DETERMINE THE MOST COST-EFFECTIVE CONFIGURATION.	• MAJOR ADVANCES ARE EXPECTED IN THE DESIGN OF MULTI-SPAR, LOW ASPECT RATIO, SMALL COMPOSITE WINGS. TO ACHIEVE THE DESIRED ADVANCES FOR TRANSPORT AIRCRAFT REQUIRES CONCENTRATION ON THE LARGE, HIGH ASPECT RATIO, COMPOSITE WING BOX AND ITS ASSOCIATED PROBLEMS.	• COMPOSITE DESIGN TECHNOLOGY HAS BEEN STEADILY ADVANCING FOR SEVERAL YEARS BECAUSE OF A CONTINUING SIZABLE EFFORT SUPPORTED BY BOTH INDUSTRY IN-HOUSE AND GOVERNMENT FUNDED PROGRAMS.
	• HOW CAN WING SURFACE SKINS AND STIFFENERS BE DESIGNED TO TAPER SPANWISE TO REALIZE THE FULL WEIGHT SAVING FROM COMPOSITES, AND STILL REFLECT REASONABLE PRODUCTION METHODS AND COSTS?			
	• WILL ADHESIVE BONDING OR SINGLE-STAGE CURE BE ADEQUATE FOR ASSEMBLY OF WING BOX SPARS, RIBS AND SURFACES OR WILL MECHANICAL FASTENERS BE REQUIRED AS A BACK-UP?			
	• WHAT SPECIAL DESIGN PROBLEMS WILL COMPOSITE STRUCTURES HAVE IN DISTRIBUTING THE CONCENTRATED LOADS FROM THE MAIN LANDING GEAR AND NACELLE PYLON?	• EFFICIENT AND INEXPENSIVE METHODS FOR LOAD TRANSFER THROUGH JOINTS AND HARD-POINTS, AND AROUND HOLES AND CUTOUTS ARE REQUIRED.		

ORIGINAL PAGE IS OF POOR QUALITY

TABLE 25. SUMMARY OF DEVELOPMENT NEEDS AND ANTICIPATED ADVANCES (Continued)

TECHNOLOGY AREA/CATEGORY	PROBLEM/CURRENT STATE OF THE ART	DEVELOPMENT NEEDED FOR SOLUTION	ANTICIPATED ADVANCES	RATIONALE OR BASIS FOR EXPECTATION
PRODUCTION DESIGN (DETAIL DESIGN DATA)	• TO START A FULL SCALE DESIGN EFFORT ON A COMPOSITE WING BOX, A COMPREHENSIVE COMPOSITE DESIGN HANDBOOK MUST BE AVAILABLE. IT MUST INCLUDE SUCH DESIGN AIDS AS: EDGE DISTANCE AND SPACING FOR FASTENERS, BEND RADII FOR LAYUPS, TOOL CLEARANCE, MACHINING PRACTICES, TANK SEALING, AND METHODS OF MARKING PARTS, TO NAME JUST A FEW.	• A DESIGN, ANALYSIS, FABRICATION, AND TEST PROGRAM WILL BE REQUIRED TO DETERMINE SATISFACTORY DETAIL DESIGN REQUIREMENTS.	• MUCH DATA WILL BE AVAILABLE FROM NUMEROUS GOVERNMENT AND INDUSTRY PROGRAMS. SPECIAL PROBLEMS ASSOCIATED WITH LARGE, HIGH ASPECT RATIO COMPOSITE WINGS WILL REQUIRE SPECIAL ATTENTION.	• USAF IS DEVELOPING COMPOSITE HANDBOOKS – DESIGN GUIDE (ROCKWELL INTERNATIONAL), AND FABRICATION GUIDE (LOCKHEED-GEORGIA).
MATERIALS AND PRODUCIBILITY TECHNOLOGY				
COMPOSITE MATERIALS	• EXCESSIVE PROPERTY SCATTER – LOW DESIGN ALLOWABLES.	• UPGRADE INHERENT PROPERTIES AND QUALITY OF COMPOSITE ELEMENTS: FIBERS, FIBER FINISH, YARN, RESIN MATRIX, FIBER FORM, PREPREG.	• MAJOR ADVANCES IN MATERIALS TECHNOLOGY ARE EXPECTED IN THE NEXT 5 YEARS. HOWEVER, IT IS BELIEVED THAT NORMAL MATERIAL SUPPLIER RESEARCH MUST BE ACCELERATED THROUGH INCREASED GUIDANCE AND FUNDING BY INDUSTRY USERS AND GOVERNMENT AGENCIES.	• MATERIAL SUPPLIERS HAVE CONTINUING RESEARCH PROGRAMS. IMPROVED FIBERS SUCH AS THE "CELION" TYPE HAVE RECENTLY BEEN DEVELOPED AND ARE AVAILABLE FOR EVALUATION. THERE ARE MANY CURRENT INDUSTRY AND GOVERNMENT SPONSORED DEVELOPMENT PROGRAMS IN THE MATERIALS AREAS.
	• ENVIRONMENTAL RESISTANCE – DEGRADATION OF STRUCTURAL PROPERTIES.	• IMPROVE CHEMICAL AND THERMAL STABILITY OF RESINS AND FIBER-RESIN BONDS IN HOSTILE ENVIRONMENTS.		
	• POOR IMPACT/DELAMINATION RESISTANCE AND DAMAGE TOLERANCE.	• DEVELOP OR EVALUATE MODIFIED EPOXY OR OTHER TYPE RESINS TO INCREASE DUCTILITY AND TOUGHNESS OF MATRIX.		
	• LOW FIRE RESISTANCE/HIGH SMOKE EMISSION/TOXICITY OF RESIN MATRICES.	• DEVELOP NEW POLYMERS OR ADAPT/MODIFY EXISTING RESINS TO MEET FUTURE FAA FIRE REQUIREMENTS.		
	• COMPLEX/HIGH COST MATERIAL PROCESSING CHARACTERISTICS.	• INCREASE SCOPE OF CURRENT DEVELOPMENT ON GRAPHITE NON-CRIMPED FABRICS, LOW FLOW RESINS AND ZERO BLEED PREPREGS.		
	• UNRELIABLE, NON-STANDARD MATERIAL TEST METHODS.	• DEVELOP/MODIFY/STANDARDIZE RELIABLE CHEMICAL, MECHANICAL AND ENVIRONMENTAL TEST METHODS.		

TABLE 25. SUMMARY OF DEVELOPMENT NEEDS AND ANTICIPATED ADVANCES (Continued)

TECHNOLOGY AREA/CATEGORY	PROBLEM/CURRENT STATE OF THE ART	DEVELOPMENT NEEDED FOR SOLUTION	ANTICIPATED ADVANCES	RATIONALE OR BASIS FOR EXPECTATION
COMPOSITE MATERIALS (CONTINUED)	• PROCESS CONTROL METHODS.	• IMPROVE METHODS FOR CONTROL OF MATERIAL PROCESSING AT ALL STAGES OF MANUFACTURE.		
PRODUCIBILITY/ FABRICATION METHODS	• HIGH COST - LACK OF COMPATIBILITY OF STRUCTURAL SHAPE, SHEET AND ASSEMBLY CONFIGURATIONS WITH UNIQUE COMPOSITE FABRICATION METHODS RELATIVE TO PROCESS/TOOLING COMPLEXITY.	• DESIGN AND PROTOTYPE FABRICATION TRADE-OFF STUDIES TO INNOVATE AND OPTIMIZE STRUCTURAL CONFIGURATIONS RELATIVE TO FUNCTION/PRODUCIBILITY/ COST.	• MAJOR ADVANCES ARE EXPECTED IN MANUFACTURING TECHNOLOGY IN THE NEAR FUTURE. HOWEVER, CONTINUOUS DESIGN/PRODUCIBILITY/ MANUFACTURING INTERFACE IS REQUIRED FOR OPTIMUM STRUCTURES AND FABRICATION METHODS DEVELOPMENT. DEVELOPMENT TO BE IN CONSONANCE WITH DEVELOPMENT OF NEW MATERIALS SUCH AS GRAPHITE FABRICS AND LOW FLOW RESIN SYSTEMS.	• MANUFACTURING TECHNOLOGY HAS BEEN STEADILY ADVANCING FOR SEVERAL YEARS BECAUSE OF A CONTINUING VERY SIZABLE EFFORT SUPPORTED BY BOTH INDUSTRY IN-HOUSE AND GOVERNMENT FUNDED PROGRAMS.
	• EXCESSIVE LABOR/HIGH COST OF FABRICATION AND QUALITY LEVEL TO ACHIEVE STRUCTURAL EFFICIENCY OF COMPOSITE HARDWARE.	• DEVELOP/MODIFY/INNOVATE AUTOMATED LAY UP AND PREFORM METHODS, TOOLS AND MACHINES. • DEVELOP/MODIFY/INNOVATE MOLDING METHODS AND TOOLS. • UPGRADE MACHINING METHODS AND TOOLS ADAPTABLE TO UNIQUE CHARACTERISTICS OF COMPOSITES. • DEVELOP FASTENER TECHNOLOGY – TYPES/HOLE FITS/ MATERIALS ADAPTABLE TO UNIQUE CHARACTERISTICS OF COMPOSITES. • DEVELOP ADHESIVE BONDING TECHNOLOGY – SURFACE PREPARATION/ADHESIVE SELECTION/BONDING METHODS ADAPTABLE TO COMPOSITES.	• DEVELOPMENT AND APPLICATION OF PREPLIED LAYUPS AND STANDARD SHAPES.	• MAY RESULT IN SOME WEIGHT PENALTY, BUT WOULD RESULT IN SIGNIFICANTLY REDUCED COST AND IMPROVED STRUCTURAL RELIABILITY.

ORIGINAL PAGE IS OF POOR QUALITY

TABLE 25. SUMMARY OF DEVELOPMENT NEEDS AND ANTICIPATED ADVANCES (Continued)

TECHNOLOGY AREA/CATEGORY	PROBLEM/CURRENT STATE OF THE ART	DEVELOPMENT NEEDED FOR SOLUTION	ANTICIPATED ADVANCES	RATIONALE OR BASIS FOR EXPECTATION
SPECIAL DESIGN PROBLEMS UNIQUE TO COMPOSITE STRUCTURE	• LIGHTNING PROTECTION/ ELECTRICAL BONDING AND DISSIPATION	• DEVELOP IMPROVED AND INNOVATIVE MATERIAL AND FABRICATION SYSTEMS AND BONDING METHODS WITH REQUIRED SERVICE DURABILITY.	• SEVERAL TYPES OF SYSTEMS HAVE BEEN INVESTIGATED IN THE INDUSTRY. FURTHER PROGRESS IS EXPECTED BUT EFFORT REQUIRES MORE IMPETUS.	• A CONSIDERABLE AMOUNT OF INDUSTRY EFFORT IS CURRENTLY UNDER WAY IN THIS AREA.
	• FIRE PROTECTION	• DEVELOP DESIGN, MATERIAL TEST CRITERIA, DETECTION/ SUPPRESSION SYSTEMS AND METHODS TO PRESERVE STRUCTURAL INTEGRITY IN FIRE ZONES.	• NO GREAT ADVANCES EXPECTED WITHOUT SPECIAL ATTENTION AND INCENTIVES.	• VERY LITTLE WORK DONE TO DATE IN THE AREA OF PRIMARY STRUCTURE.
	• FUEL CONTAINMENT	• DEVELOP DESIGN, CONCEPTS, SEALING METHODS AND MATERIALS COMPATIBLE WITH COMPOSITE STRUCTURE, AND REQUIRED SERVICE DURABILITY.	• SOME ADVANCES EXPECTED BUT SPECIAL EMPHASIS REQUIRED TO SPUR INNOVATION.	• SOME WORK HAS BEEN DONE IN THIS AREA.
MANUFACTURING TECHNOLOGY				
RAW MATERIAL FORM	• RESIN CONTENT – PREPREG MATERIAL AS RECEIVED FROM SUPPLIER CONTAINS EXCESS RESIN NECESSITATING A PREBLEED CYCLE IN FABRICATION.	• CONTINUE DEVELOPMENT OF IMPREGNATING TECHNIQUES TO PRODUCE LOW RESIN CONTENT MATERIALS.	• EXPECT SUPPLIERS TO OFFER LOW RESIN CONTENT MATERIAL WITHIN 2-3 YEARS.	• SMALL QUANTITIES OF HIGHLY IMPROVED MATERIAL ARE ALREADY AVAILABLE ON SPECIAL ORDER BASIS.
	• PREPLIED MATERIAL – PREPREG NOW AVAILABLE IN UNIDIRECTIONAL TAPE OR CLOTH IN WIDTHS UP TO 72 IN.	• PREPREG VENDORS SHOULD ESTABLISH CAPABILITY TO OFFER MATERIAL PREPLIED AND PRECUT FOR DIRECT APPLICATION INTO FABRICATION MOLDING TOOLS.	• HERCULES NOW HAS CAPABILITY. NARMCO PROMISING DEVELOPMENT OF CAPABILITY IN NEAR TERM.	• INCREASED PROFIT POTENTIAL FOR SUPPLIER, AND POSSIBLY MORE COST EFFECTIVE THAN PREPLYING AT USERS FACILITY.
	• VENDOR QUALITY CONTROL – PREPREG SUPPLIERS CONCERN OF PROPRIETARY PROCESSES RESULTS IN MATERIAL OF UNKNOWN QUALITY WITH "FLAGGED" DEFECTS DELIVERED.	• IN-PROCESS CONTROLS AT VENDOR, AND TESTING OF LAMINATES FOR PROPERTY DEGRADATION BASED ON DEFECT TYPE AND SEVERITY.	• NON-DISCLOSURE AGREEMENTS WITH VENDORS AND SOURCE INSPECTION.	• INSISTENCE ON CONTINUOUS QUALITY SURVEILLANCE FROM FIBER MANUFACTURE THROUGH IMPREGNATION WILL ULTIMATELY RESULT IN ACCESS TO VENDOR FACILITIES.

TABLE 25. SUMMARY OF DEVELOPMENT NEEDS AND ANTICIPATED ADVANCES (Continued)

TECHNOLOGY AREA/CATEGORY	PROBLEM/CURRENT STATE OF THE ART	DEVELOPMENT NEEDED FOR SOLUTION	ANTICIPATED ADVANCES	RATIONALE OR BASIS FOR EXPECTATION
FABRICATION TECHNIQUES	• MANUFACTURING COST OF FLAT LAYUPS – PRESENTLY ALL HAND LAYUP WORK.	• AUTOMATIC TYPE LAYING EQUIPMENT ESSENTIAL TO REDUCE MANHOUR CONTENT.	• DISCUSSIONS WITH MACHINE TOOL INDUSTRY EXPECTED TO RESULT IN SPECIFICATIONS AND BIDS FOR EQUIPMENT.	• COMPOSITES WILL NOT BE COST COMPETITIVE WITH CONVENTIONAL STRUCTURE USING HAND LAYUP.
	• MANUFACTURING COST OF FORMED SHAPES – PRESENTLY LAID UP PLY-BY-PLY INTO CONTOURED MOLDING FIXTURES.	• METHOD OF SHAPING PRE-PLIED BLANKS INTO STRUCTURAL SHAPES. ALSO REQUIRES DESIGN UNDERSTANDING OF PRODUCIBILITY FEATURES OF MATERIAL.	• PRESS FORMING AND ROLL FORMING METHODS OF PRODUCING SOME SHAPES SHOW NEAR-TERM PROMISE.	• PRODUCIBILITY CONSIDERATIONS WILL DICTATE AUTOMATED TECHNIQUES AND VETO DESIGNS WHICH REQUIRE EXCESSIVE HAND LAYUP.
	• MANUFACTURING COST OF TRIMMING – CUTTING TECHNIQUES FOR TRIMMING BOTH UNCURRED MATERIAL AND CURED PARTS ARE TOO EXPENSIVE.	• DEVELOPMENT PROGRAMS EVALUATING FEASIBILITY AND COST EFFECTIVENESS OF ALTERNATES ARE REQUIRED.	• SEVERAL IMPROVED TECHNIQUES ARE IN DEVELOPMENT, SUCH AS WATER JET OR GERBER KNIFE FOR UNCURED MATERIAL, AND ABRASIVE DISCS FOR CURED LAMINATES.	• PROBLEM IS COMMON TO ALL MANUFACTURERS, AND ALL ARE ACTIVELY SEEKING SOLUTIONS.
LAMINATE CURING	• MANUFACTURING COST; CURING – ALMOST ALL PARTS ARE NOW AUTOCLAVE CURED. LARGEST AUTOCLAVE IS 22 X 60 FEET.	• COST TRADE-OFF STUDIES BETWEEN AUTOCLAVE CURING, INTEGRALLY HEATED TOOLS, AND HEATED PLATTEN PRESSES ARE REQUIRED.	• EXPECT THAT AUTOCLAVE CURE WILL CONTINUE TO BE MOST COST-EFFECTIVE, FOLLOWED BY HEATED PLATTEN PRESS.	• PRODUCTION QUANTITIES OF AEROSPACE COMPOSITE COMPONENTS ARE NOT EXPECTED TO BE SUFFICIENT TO AMORTIZE COSTS OF INTEGRAL HEAT AND PRESSURE TOOLING.
COMPONENT ASSEMBLY	• MANUFACTURING COST; ASSEMBLY OF COMPONENTS – ALTERNATIVES ARE MECHANICAL FASTENERS, ADHESIVE BONDING, STITCHING, SINGLE STAGE CURE.	• HOLE QUALITY INVESTIGATION REQUIRED FOR MECHANICAL, ADHESIVE EVALUATION FOR BONDING, STRUCTURAL TESTING FOR STITCHING, AND TOOLING AND PROCESS POTENTIAL FOR OPTIMIZING SINGLE STAGE CURE APPLICABILITY.	• ALTERNATES TO MECHANICAL FASTENING AND ADHESIVE BONDING WILL BE DEVELOPED VIGOROUSLY IN NEXT FEW YEARS. IN ADDITION, MORE ASSEMBLIES WILL BE DESIGNED FOR CO-CURE OR SINGLE STAGE CURE.	• MANUFACTURING COSTS CAN BE MINIMIZED IF MULTIPLE DETAIL PARTS CAN BE COMBINED INTO SINGLE LAMINATES, OR IF TWO OR MORE LAMINATES CAN BE JOINED BY IMPROVED METHODS.

ORIGINAL PAGE IS OF POOR QUALITY

TABLE 25. SUMMARY OF DEVELOPMENT NEEDS AND ANTICIPATED ADVANCES (Continued)

TECHNOLOGY AREA/CATEGORY	PROBLEM/CURRENT STATE OF THE ART	DEVELOPMENT NEEDED FOR SOLUTION	ANTICIPATED ADVANCES	RATIONALE OR BASIS FOR EXPECTATION
QUALITY ASSURANCE TECHNOLOGY				
MATERIAL AND PROCESSES QUALITY	• COMPOSITE DURABILITY IS AFFECTED PRIMARILY BY RESIN. INFRARED ANALYSIS USED IN PAST IS NOT SUFFICIENTLY SENSITIVE. FIBER SIZING MAY BE CRITICAL FOR PROPERTIES AFFECTED BY FIBER RESIN BOND. GRAPHITE FIBERS OFTEN HAVE SODIUM IMPURITY, RESIDUAL ORGANICS, AND VARIATIONS IN DEGREE OF GRAPHITIZATION.	• DEVELOPMENT OF ADEQUATE ANALYTICAL PROCEDURES TO DETECT BATCH-TO-BATCH VARIATIONS IN RESIN CHEMISTRY, FIBER CHEMISTRY, FIBER SIZING; DETECTION AND CONTROL OF DEGREE OF GRAPHITIZATION; AND IN STORAGE EFFECTS ON RESIN. IMPROVEMENTS IN INHERENT CHEMICAL AND MECHANICAL PROPERTIES OF FIBERS, FIBER FINISHES, AND RESINS ARE NEEDED.	• LIQUID CHROMATOGRAPHY – HIGHLY SENSITIVE TO TRACE ORGANIC CONSTITUENTS CURRENTLY BEING USED BY LOCKHEED, AND FURTHER REFINEMENTS ARE ANTICIPATED.	• CURRENT DEVELOPMENT OF LIQUID CHROMATOGRAPHY SUFFICIENTLY ADVANCED TO USE IN Q.A. PROCEDURES.
	• BATCHES FROM UNION CARBIDE ARE NOT TRACEABLE TO SPECIFIC PRODUCTION RUNS AT THE MANUFACTURING FACILITY. UNION CARBIDE USES FIBERS PRODUCED IN JAPAN.	• IMPROVED BATCH CONTROL AND TRACEABILITY OF GRAPHITE FIBERS ARE NEEDED.	• FULL DISCLOSURE AND TRACEABILITY FOR FIBERS.	• UNION CARBIDE AWARE OF PROBLEM; COMPETITION WITH CELANESE SHOULD PROVIDE INCENTIVE.
	• DIFFICULTY IN PERFORMING ENVIRONMENTAL CONDITIONING AND DURABILITY TESTS WITHIN TIME LIMITS OF ACCEPTANCE TESTS MAKES IT DIFFICULT TO SIMULATE LONG-TERM ENVIRONMENTAL EFFECTS.	• CORRELATION OF LABORATORY CONDITIONING WITH LONG-TERM DURABILITY IN FLIGHT SERVICE.	• ADDITIONAL TEST DATA PROVIDING CORRELATION OF ACCELERATED AND REAL TIME CONDITIONING.	• CONSIDERABLE CURRENT INDUSTRY ACTIVITY IN COMPOSITE DURABILITY.
	• INADEQUATE DATA TO CORRELATE PRE-PREG DEFECTS (I.E., GAPS, OVERLAPS, MISALIGNED FIBERS, ETC.) WITH MECHANICAL PROPERTIES AND TO PROVIDE SPECIFICATION GUIDELINES.	• TEST DATA TO PROVIDE GUIDELINES ON ACCEPTABLE LIMITS FOR PRE-PREG DEFECTS.	• ADDITIONAL DEFECT TOLERANCE STUDIES PROVIDING CORRELATION OF DEFECT TYPES AND SIZES WITH MECHANICAL PROPERTIES.	• CURRENT INDUSTRY ACTIVITY IN THIS TYPE OF DAMAGE TOLERANCE TEST.

TABLE 25. SUMMARY OF DEVELOPMENT NEEDS AND ANTICIPATED ADVANCES (Continued)

TECHNOLOGY AREA/CATEGORY	PROBLEM/CURRENT STATE OF THE ART	DEVELOPMENT NEEDED FOR SOLUTION	ANTICIPATED ADVANCES	RATIONALE OR BASIS FOR EXPECTATION
MATERIAL AND PROCESSES QUALITY (CONTINUED)	• THE EFFECTS OF RESIN VARIABLES SUCH AS COMPOSITION, STORAGE TIME, ETC. ON CURE CYCLE LIMITS HAVE NOT BEEN FULLY ESTABLISHED FOR CURRENTLY USED MATERIALS.	• ESTABLISH OPTIMUM CURE CYCLE AND LIMITS BY DETERMINING RESIN RHEOLOGY – TIME, TEMPERATURE, VISCOSITY, OUTGASSING, EXOTHERM, ENDOTHERM RELATIONSHIPS; DETERMINE BY TECHNIQUES SUCH AS DIELECTRIC ANALYSIS (AUDRE) AND/OR THERMAL ANALYSIS (DIFFERENTIAL, GRAVIMETRIC, MECHANICAL).	• BASIC TECHNIQUES EXIST; MORE REFINEMENT AND INCREASED USAGE EXPECTED.	• SEVERAL GOVERNMENT PROGRAMS ARE IN PROGRESS. MORE SOPHISTICATED PROCESS CONTROL REQUIRED FOR PRIMARY STRUCTURE WILL ACCELERATE DEVELOPMENT.
	• QUALITY VARIATION OF ROLLS WITHIN BATCHES. ACCEPTANCE TESTS, IN MANY INSTANCES, ARE RUN ON ONE ROLL ONLY. THIS PROVIDES NO INFORMATION ON VARIATIONS BETWEEN ROLLS. 100-PERCENT INSPECTION OF ROLLS FOR UNREPORTED DEFECTS IS NOT POSSIBLE; THIS COULD BE CRITICAL FOR AUTOMATED LAYUP.	• DEVELOPMENT OF ADEQUATE SAMPLING PLANS ADAPTABLE TO COMPOSITES.	• IMPROVED CONTROLS AND UNIFORMITY BY PREPREGGERS.	• NARMCO REPORTS CONTINUING IMPROVEMENTS IN THEIR TAPE OPERATION INCLUDING CONTROLS OF FIBER TENSIONING, ALIGNMENT, PAPER COMPATIBILITY, SLITTING, ETC.
NONDESTRUCTIVE INSPECTION	• HAND-HELD AND SEMI-AUTOMATIC NONDESTRUCTIVE INSPECTION SYSTEMS ARE NOT PRACTICAL FOR APPLICATION ON COMPOSITE STRUCTURES HAVING VARYING THICKNESS AND CONFIGURATION.	• RAPID NONDESTRUCTIVE INSPECTION SYSTEMS: o CAPABILITY OF ADAPTING TO CROSS-SECTIONAL CHANGES WITHOUT OPERATOR INPUT. o CAPABILITY OF NONDESTRUCTIVE INSPECTION OF SMALL DETAILS AS WELL AS LARGE AREA STRUCTURES.	• REAL-TIME DATA ACQUISITION; DATA ACQUISITION, STORAGE AND PLOTTING SYSTEM; PHASE ARRAY TRANSDUCER SYSTEMS; REAL-TIME COMPUTER CONTROLLED INTERACTIVE SYSTEMS.	• CURRENT DEVELOPMENT WORK IN THESE AREAS HAS SHOWN PROMISE AND PROJECTING DEVELOPMENT ADVANCES THROUGH THE 1980 – 1990 TIME PERIOD WOULD INDICATE SUCCESS IN MEETING THE TECHNOLOGY NEEDS.
	• THERE IS NO PRACTICAL NONDESTRUCTIVE INSPECTION PRODUCTION TECHNIQUES FOR DETERMINING PHYSICAL PROPERTIES.	• ROUGH RESIN CONTENT/FIBER VOLUME DATA IN AREAS WHERE COUPONS CANNOT BE REMOVED IS NEEDED TO INSURE PHYSICAL PROPERTIES. MOISTURE CONTENT AND OTHER PHYSICAL PROPERTIES MAY BE REQUIRED ALSO.	• NONDESTRUCTIVE INSPECTION TECHNIQUES FOR DETERMINATION OF PHYSICAL PROPERTIES.	• CURRENT R&D IN THIS AREA HAS SHOWN SOME PROMISE. DUE TO THE LIMITED BASE THESE TECHNIQUES HAVE NOT BEEN APPLIED TO PRODUCTION.

ORIGINAL PAGE IS OF POOR QUALITY

C-3

TABLE 25. SUMMARY OF DEVELOPMENT NEEDS AND ANTICIPATED ADVANCES (Continued)

TECHNOLOGY AREA/CATEGORY	PROBLEM/CURRENT STATE OF THE ART	DEVELOPMENT NEEDED FOR SOLUTION	ANTICIPATED ADVANCES	RATIONALE OR BASIS FOR EXPECTATION
PRODUCT SUPPORT TECHNOLOGY				
IN-SERVICE INSPECTION	• NEED RELIABLE AND ECONOMICAL IN-SERVICE, IN-PLACE NDI MAINTENANCE INSPECTION CAPABILITY FOR COMPOSITE MATERIAL STRUCTURE COMPARABLE TO CURRENT CAPABILITY FOR METALLIC STRUCTURE.	• DEVELOPMENT AND DEMONSTRATION OF INSPECTION PROCEDURES, METHODS AND INSTRUMENTATION SO AS TO PROVIDE A HIGH DEGREE OF CONFIDENCE IN OUR ABILITY TO DETECT DAMAGE LEVELS BEYOND THE TOLERANCE LIMITS ESTABLISHED DURING PREPRODUCTION DURABILITY AND DAMAGE TOLERANCE TESTING, AND THEREBY PROVIDE AN ENSURANCE OF SAFETY OF FLIGHT COMPARABLE TO METALLIC STRUCTURE AND EQUALLY COST-EFFECTIVE. THESE NDI TECHNIQUES MUST PROVIDE DETECTABILITY FOR INTERIOR STRUCTURES AND OTHER AREAS NOT READILY ACCESSIBLE FOR SURFACE INSPECTION.	• A NUMBER OF NEW TECHNIQUES AND IMPROVEMENTS ARE CURRENTLY IN THE DEVELOPMENT STAGE. THESE WILL REQUIRE FURTHER DEVELOPMENT, AND DEMONSTRATION OF THEIR RELIABILITY. NEW TECHNIQUES ARE PARTICULARLY NEEDED FOR REAL TIME IMAGING AND RECORDING, AND THREE-DIMENSIONAL CAPABILITY.	• BOTH DOD AND NASA HAVE R&D PROGRAMS IN THIS AREA. NASA PROGRAM — "EVALUATION AND DEVELOPMENT OF IN-SERVICE INSPECTION METHODS FOR GRAPHITE/EPOXY COMPOSITE STRUCTURES ON COMMERCIAL TRANSPORT AIRCRAFT" WILL PROVIDE LEAD TO DEVELOP INSPECTION PROCEDURES FOR IN-SERVICE AIRLINE MAINTENANCE OF GRAPHITE/EPOXY COMPOSITE STRUCTURES.
IN-SERVICE REPAIR	• NEED COST-EFFECTIVE REPAIR TECHNIQUES SUITABLE FOR PRODUCING HIGH QUALITY, EFFICIENT STRUCTURAL REPAIRS UNDER AIRLINE MAINTENANCE CONDITIONS.	• DEVELOPMENT AND DEMONSTRATION OF REPAIR CONCEPTS AND TECHNIQUES WHICH WILL PROVIDE THE REQUIRED STRENGTH AND DURABILITY, ARE APPLICABLE TO COMPLEX STRUCTURE IN LIMITED ACCESS LOCATIONS, AND MINIMIZE MATERIAL AND FABRICATION COMPLEXITY COSTS.	• NEW REPAIR CONCEPTS AND TECHNIQUES ARE BEING DEVELOPED. HOWEVER, MEANS TO LOWER REQUIRED REPAIR CURE TEMPERATURES AND PRESSURES, AND/OR IMPROVED REPAIR EQUIPMENT ARE NEEDED. IN ADDITION, FURTHER DEMONSTRATION OF THE INTEGRITY OF THESE REPAIRS IN HIGHLY LOADED PRIMARY STRUCTURE IS REQUIRED.	• BOTH DOD AND NASA HAVE R&D PROGRAMS IN THIS AREA. IN ADDITION, REPAIR VALIDATION TESTS ARE INCLUDED IN THE ACEE COMPONENT PROGRAMS. NASA PROGRAM — "DEVELOPMENT, DEMONSTRATION AND VERIFICATION OF REPAIR TECHNIQUES AND PROCESSES FOR GRAPHITE/EPOXY STRUCTURES FOR COMMERCIAL TRANSPORT AIRCRAFT" WILL PROVIDE LEAD TO DEVELOPING REPAIR PROCEDURES FOR IN-SERVICE AIRLINE MAINTENANCE OF GRAPHITE/EPOXY COMPOSITE STRUCTURES.

TABLE 26. ESSENTIAL TECHNOLOGY DEVELOPMENT

ORIGINAL PAGE IS
OF POOR QUALITY

DEVELOPMENT NEEDS	APPROACHES TO EFFECT
DESIGN ANALYSIS METHODS AND DATA	
• DESIGN INFORMATION RELATIVE TO STRENGTH, DURABILITY AND DAMAGE TOLERANCE OF COMPOSITE MATERIAL WING STRUCTURES. DATA ON COMPOSITE MATERIAL RESPONSE TO STATIC AND CYCLIC LOAD AND ENVIRONMENT SPECTRA ASSOCIATED WITH HIGHLY LOADED PRIMARY WING STRUCTURE, INCLUDING TEMPERATURE, MOISTURE, FOREIGN OBJECT IMPACT, AND OTHER ENVIRONMENTAL CONSIDERATIONS (E. G., FUEL, HYDRAULIC OIL, LIGHTNING, ETC.). DESIGN CRITERIA (E. G., DESIGN STRAIN LEVELS) FOR DURABILITY AND DAMAGE TOLERANCE.	• ANALYTICAL AND EXPERIMENTAL INVESTIGATIONS. o DEFINITION OF DESIGN ENVIRONMENTS; E. G., FOD DESIGN ENVIRONMENT (HAIL, TOOL DROP AND OTHER IMPACT SOURCES). o EXPERIMENTAL EVALUATION OF EFFECTS; E. G., MATERIAL PERFORMANCE TESTING USING CYCLIC LOAD, TEMPERATURE AND MOISTURE SPECTRA; AND EXPERIMENTAL EVALUATION OF IMPACT DAMAGE EFFECTS ON STATIC AND FATIGUE STRENGTH. o DOCUMENTATION, AND DEFINITION OF DESIGN CRITERIA.
• DESIGN ANALYSIS METHODS DEVELOPMENT AND SUBSTANTIATION, INCLUDING: o STATIC STRENGTH UNDER COMBINED LOADS o EFFECTS OF NORMAL TENSION AND SHEAR, AND TRANSVERSE SHEAR DEFORMATION. o BUCKLING AND POST-BUCKLING STRENGTH. o FATIGUE LIFE PREDICTION. o DAMAGE TOLERANCE AND RESIDUAL STRENGTH.	• ANALYTICAL STUDIES AND TESTING TO DEVELOP AND VERIFY THE ANALYSIS METHODS. STRENGTH, STABILITY AND FATIGUE TESTING OF STRUCTURAL ELEMENTS, JOINTS AND SUBCOMPONENTS IN SUFFICIENT QUANTITIES FOR STATISTICAL ANALYSIS. A THOROUGH UNDERSTANDING OF THE PROPERTIES AND FAILURE MODES IN THE THIRD DIMENSION OF THE LAMINATE IS ESSENTIAL, AND DEVELOPMENT OF NEW TEST TECHNIQUES WILL BE REQUIRED.
• DESIGN AND ANALYSIS GUIDELINES, DATA AND HANDBOOKS, INCLUDING: o PRELIMINARY DESIGN CHARTS. o COMPREHENSIVE COMPOSITE DESIGN HANDBOOK (FOR PRODUCTION DESIGN), COVERING: DETAIL DESIGN, DESIGN STANDARDS, FABRICATION METHODS, LONGLIFE REQUIREMENTS, TANK SEAL REQUIREMENTS, LIGHTNING PROTECTION, DAMAGE TOLERANCE DESIGN, AND SYSTEM INTEGRATION. o STRESS MEMO MANUAL COVERING ANALYSIS METHODS AND DATA FOR HIGHLY LOADED PRIMARY STRUCTURE OF COMPOSITE WINGS. o STRUCTURAL LIFE ASSURANCE MANUAL COVERING ANALYSIS METHODS AND DATA FOR EVALUATING DURABILITY AND DAMAGE TOLERANCE OF COMPOSITE WING STRUCTURE.	• SURVEY, EVALUATE, AND COMPILE DESIGN INFORMATION, FABRICATION METHODS, AND TEST DATA FROM ALL CURRENT AND FUTURE COMPOSITE STUDIES; EVALUATE PERFORMANCE AND SERVICE LIFE EXPERIENCE OF CURRENT HARDWARE. • DESIGN, FABRICATE, AND TEST COMPONENTS AND SUB-ASSEMBLIES TO FILL VOIDS IN THE DATA NEEDED TO COMPLETE THE DESIGN AND ANALYSIS HANDBOOKS AND TO START DETAIL DESIGN OF A COMMERCIAL TRANSPORT COMPOSITE WING BOX.

TABLE 26. ESSENTIAL TECHNOLOGY DEVELOPMENT (Continued)

DEVELOPMENT NEEDS	APPROACHES TO EFFECT
PRELIMINARY DESIGN	
• DESIGN AND ANALYSIS OF HIGH ASPECT RATIO COMMERCIAL TRANSPORT WINGS WITH EXTENSIVE USE OF COMPOSITE MATERIALS.	• IN-DEPTH DESIGN CONCEPT STUDIES TO ASSESS THE RELATIVE MERITS OF VARIOUS STRUCTURAL ARRANGEMENTS. TO SELECT THE STRUCTURAL APPROACHES BEST SUITED FOR THE DESIGN ENVIRONMENT, AND TO PROVIDE CONSTRUCTION DETAILS AND STRUCTURAL MASS ESTIMATES.
DESIGN DEVELOPMENT AND VERIFICATION	
• ASSESS THE VALIDITY OF PROMISING STRUCTURAL DESIGN CONCEPTS FOR PRIMARY WING STRUCTURE APPLICATION.	• CONDUCT ANALYTICAL AND EXPERIMENTAL INVESTIGATIONS OF PROMISING STRUCTURAL CONCEPTS AND VALIDATE THE MORE PROMISING CONCEPTS THROUGH SUBCOMPONENT AND COMPONENT TESTS. RESULTS OF THE COMPONENT TESTS WILL BE COMPARED WITH PREDICTED VALUES TO DETERMINE THE DEGREE TO WHICH CONCEPT PERFORMANCE CAN BE PREDICTED IN A REALISTIC STRUCTURAL APPLICATION.
• DESIGN, ANALYSIS, FABRICATION AND TEST VERIFICATION OF SIGNIFICANT OR UNIQUE DESIGN PROBLEMS; E. G., WING-FUSELAGE, WING-MAIN LANDING GEAR, AND WING-PYLON INTERFACES, AND THE FUEL TANK LIGHTNING PROTECTION SYSTEM.	• DESIGN, BUILD AND TEST MAJOR PORTIONS OF WING STRUCTURE, INCLUDING STATIC, CYCLIC LOAD/ENVIRONMENT AND SYSTEM TESTS.
COMPOSITE MATERIALS, PROCESSES, TESTING AND CONTROL	
• NEW IMPROVED MATERIAL SYSTEMS INCORPORATING NEW FIBERS, FIBER FINISHES, LOW FLOW RESINS, NONCRIMPED FABRICS AND ZERO-BLEED PREPREGS. MATERIALS SHOULD BE TAILORED TO HAVE AN OPTIMUM BALANCE OF PROPERTIES MEETING ENGINEERING, MANUFACTURING AND MAINTAINABILITY NEEDS AS FOLLOWS: o LOW SCATTER IN STATIC AND FATIGUE MECHANICAL PROPERTIES. o ADEQUATE DUCTILITY AND TOUGHNESS OF RESIN MATRICES AND COMPOSITE IMPACT RESISTANCE. o ADEQUATE PERFORMANCE AND DURABILITY IN INTERACTING STRESS, THERMAL AND CHEMICAL ENVIRONMENTS.	• INITIATE SECOND GENERATION MATERIAL DEVELOPMENT PROGRAMS. o ESTABLISH INDUSTRY STANDARD MATERIAL SYSTEMS AND TARGET SPECIFICATIONS BY TASK FORCE ACTION. o DEFINE PROGRAMS REQUIRED IN LINE WITH STANDARDS AND AND TARGET SPECIFICATIONS. o PLACE DEVELOPMENT PROGRAMS WITH USER-SUPPLIER TEAMS, INCLUDING AIRFRAME, FIBER, WEAVING, RESIN, AND PREPREG MANUFACTURERS. o EVALUATE RESULTANT MATERIAL SYSTEM CANDIDATES AND SELECT MATERIAL SYSTEM PROVIDING BEST COMBINATION OF PROPERTIES.

ORIGINAL PAGE IS
OF POOR QUALITY

TABLE 26. ESSENTIAL TECHNOLOGY DEVELOPMENT (Continued)

DEVELOPMENT NEEDS	APPROACHES TO EFFECT
COMPOSITE MATERIALS, PROCESSES, TESTING AND CONTROL (CONT'D)	
o ADEQUATE FLAME RESISTANCE AND LOW SMOKE EMISSION AND TOXICITY UNDER FIRE EXPOSURE CONDITIONS. o CONSISTENT QUALITY OF FIBERS, RESINS, AND PREPREGS. o LOW COST/LESS COMPLEX PROCESSING CHARACTERISTICS.	
• INDUSTRY STANDARDS FOR MATERIALS, PROCESSES AND TEST METHODS. THESE STANDARDS SHOULD INCLUDE A MINIMUM NUMBER OF MATERIAL SYSTEM TYPES TO SATISFY DESIGN SELECTION NEEDS TOGETHER WITH RELATED DETAIL MATERIAL AND PROCESS SPECIFICATIONS, AND TEST METHODS. THESE ARE NECESSARY TO DEFINE MATERIAL CHARACTERISTICS AND CONTROL ALL MANUFACTURING VARIABLES TO ASSURE A HIGH QUALITY END PRODUCT. STANDARDS ARE REQUIRED TO PREVENT DILUTION OR DUPLICATION OF DEVELOPMENT EFFORT BY MATERIAL SUPPLIERS AND USERS WITH AN END OBJECTIVE OF REDUCING DEVELOPMENT COST AND TIME AS WELL AS EVENTUAL PRODUCTION COSTS.	• ORGANIZE A NASA-INDUSTRY-FAA STEERING TASK FORCE WITH NECESSARY SUBCOMMITTEES AND FUNDING TO ESTABLISH MATERIAL STANDARDS FOR SUBSONIC COMMERCIAL TRANSPORT AIRCRAFT AS FOLLOWS: o DESIGN GUIDELINES COVERING ITEMS SUCH AS TEMPERATURE REGIMES, LIFE, FIRE RESISTANCE AND SMOKE EMISSION. o MATERIAL SYSTEM TYPES REQUIRED; SUCH AS GENERAL PURPOSE, HEAT RESISTANT, FLAME RESISTANT, AND HIGH MODULUS. o DETAIL TARGET MATERIAL SPECIFICATIONS TO BE USED AS BASIS FOR MATERIAL DEVELOPMENT. INCLUDE MANUFACTURING PROCESS REQUIREMENTS. o TEST METHODS – CHEMICAL, MECHANICAL AND ENVIRONMENTAL. o FINAL MATERIAL SPECIFICATIONS COVERING ALL COMPOSITE ELEMENTS – FIBERS, FIBER FINISHES, FABRICS, RESINS AND PREPREGS. NOTE: RESPONSIBLE GROUPS WILL PROVIDE GUIDANCE FOR DEVELOPMENT, AND COORDINATE ROUND-ROBIN TESTING EFFORTS IN APPLICABLE TECHNOLOGY AREA.
• NEW OR MODIFIED, RELIABLE MATERIAL TEST METHODS, COVERING: MECHANICAL STRENGTH, STIFFNESS AND IMPACT TESTS; CHEMICAL TESTS SUCH AS RESIN AND FIBER ANALYSIS AND FIBER-RESIN CONTENT OF COMPOSITES; ENVIRONMENTAL TESTS INCLUDING HUMIDITY EXPOSURE, MOISTURE ABSORPTION, HOT AND COLD TEMPERATURE EXPOSURE, ETC.	• INITIATE TEST METHOD DEVELOPMENT PROGRAMS. o DEFINE PROGRAMS REQUIRED IN LINE WITH INDUSTRY TASK FORCE RECOMMENDATIONS AND THIS STUDY. o PLACE DEVELOPMENT PROGRAMS WITH MATERIAL USERS AND/OR SUPPLIERS COVERING FIXTURES, SPECIMEN CONFIGURATIONS, PROCEDURES, PROVING TESTS AND ROUND-ROBIN VERIFICATION TESTING.
• NEW LOW COST PROCESSING PROCEDURES COVERING OPTIMUM CURE CYCLES (TEMPERATURE, TIME, PRESSURE), LIMITS ON CRITICAL PROCESS VARIABLES, LAY-UP AND BAGGING MATERIALS AND PROCEDURES, AND METHODS FOR CONTROLLING CRITICAL PROCESS VARIABLES WITHIN LIMITS SUCH AS CURE TEMPERATURE, TIME AND PRESSURE.	• INITIATE PROCESS DEVELOPMENT PROGRAMS. o DEFINE PROGRAMS REQUIRED IN CONSONANCE WITH MATERIAL DEVELOPMENT AND IN LINE WITH COMMITTEE RECOMMENDATIONS.

TABLE 26. ESSENTIAL TECHNOLOGY DEVELOPMENT (Continued)

DEVELOPMENT NEEDS	APPROACHES TO EFFECT
COMPOSITE MATERIALS, PROCESSES, TESTING AND CONTROL (CONT'D)	
	▫ PLACE DEVELOPMENT PROGRAMS WITH MATERIAL USER-SUPPLIER TEAMS COVERING OPTIMIZATION OF PROCESS PROCEDURES, PROCESS CONTROL METHODS AND PROCESS CONTROL TESTING. THIS WORK WILL PROVIDE A BASIS FOR ESTABLISHING PROCESS SPECIFICATION LIMITS ON PROCESS VARIABLES AND METHODS TO CONTROL VARIABLES WITHIN LIMITS.
PRODUCIBILITY/FABRICATION METHODS	
• DESIGN AND FABRICATION PRODUCIBILITY STUDIES TO INNOVATE AND OPTIMIZE STRUCTURAL CONFIGURATIONS, MATERIAL TYPES AND FORMS, TOOLING CONCEPTS, AND FABRICATION METHODS RELATIVE TO FUNCTION/PRODUCIBILITY/COST/WEIGHT. CONFIGURATIONS MUST BE ADAPTABLE TO UNIQUE COMPOSITE FABRICATION METHODS INCORPORATING A MINIMUM NUMBER OF OPERATIONS, AND MINIMUM COMPLEXITY OF TOOLS AND PROCEDURES.	• STUDIES AND DEVELOPMENT OF STRUCTURAL DESIGN CONCEPTS COUPLED WITH CORRESPONDING FABRICATION CONCEPTS. THESE PROGRAMS SHOULD COVER BOTH DESIGN DEVELOPMENT AND TRADEOFF STUDIES, AND EXPERIMENTAL FABRICATION AND EVALUATION OF SELECTED PROTOTYPE STRUCTURAL CONFIGURATIONS.
• ADVANCE STATE-OF-THE-ART IN SPECIFIC FABRICATION TECHNOLOGY AREAS: AUTOMATED LAY-UP AND PREFORMING METHODS/EQUIPMENT; MOLDING METHODS AND TOOLS, INCLUDING BAG AND BLADDER MOLDING, AND AUTOMATED SHAPE FORMING; MACHINING METHODS AND TOOLS, INCLUDING CUTTING OF PREPREG AND TRIMMING OF CURED PARTS; AND FASTENING TECHNIQUES (MECHANICAL AND BONDING). DEVELOPMENT PROGRAMS ARE REQUIRED TO MODIFY, EXPAND OR REFINE EXISTING TECHNOLOGY OR DEVELOP NEW TECHNIQUES. THIS DEVELOPMENT MUST BE CARRIED TO A STAGE WHERE PRODUCTION PROGRAMS MAY BE INITIATED WITH ASSURANCE THAT COST AND REPRODUCIBILITY GOALS WILL BE MET.	• AS DESIGN AND MANUFACTURING CONCEPTS EVOLVE INTO PREFERRED CONFIGURATIONS FOR INDIVIDUAL COMPONENTS, SPECIFIC REQUIREMENTS FOR FABRICATION TECHNOLOGY DEVELOPMENT WILL BE IDENTIFIED. DEFINE AND IMPLEMENT PROGRAMS FOR DEVELOPMENT AND PROVE-OUT OF LEAST-COST APPROACHES TO TOOLING AND FABRICATION OF THESE COMPONENTS. THE PROGRAMS INITIALLY SHOULD ADDRESS THE MOST CRITICAL DESIGN AND MANUFACTURING AREAS, AND ULTIMATELY BE EXPANDED TO INCLUDE VIRTUALLY THE COMPLETE WING. IN MANY INSTANCES, DEVELOPMENT OF AUTOMATED EQUIPMENT IN COOPERATION WITH EQUIPMENT MANUFACTURERS WILL BE REQUIRED.
MANUFACTURING PLAN	
• DEVELOP MANUFACTURING PLAN(S) FOR COMPOSITE WING DESIGN CONCEPTS; INCLUDING DEFINITION OF COMPONENT BREAKDOWN, DEVELOPMENT OF ALTERNATE MANUFACTURING APPROACHES FOR MAJOR WING COMPONENTS, AND ESTABLISHMENT OF FACILITY AND EQUIPMENT REQUIREMENTS FOR TOOLS AND FACILITIES FOR CURING OUTSIZED COMPONENTS, AND CONTAMINATION CONTROL REQUIREMENTS.	• MANUFACTURING STUDIES OF COMPOSITE WING PRODUCTION, INCLUDING JOINT ENGINEERING AND MANUFACTURING CONCEPT EVALUATION TO DETERMINE COMPONENT BREAKDOWN, DEFINITION OF TOOLING AND PROCESSING SEQUENCES BASED ON PRODUCIBILITY AND FABRICATION METHODS DEVELOPMENT, AND DEVELOPMENT OF TOOLING AND PRODUCTION COST ESTIMATES OF ALTERNATIVE MANUFACTURING APPROACHES. DEVELOP COMPONENT FABRICATION AND ASSEMBLY PLANS AND SCHEDULES, AND DEFINE CORRESPONDING REQUIRED FACILITIES AND EQUIPMENT.
QUALITY ASSURANCE METHODS	
• DEVELOP AND ESTABLISH STANDARD SPECIFICATIONS ENCOMPASSING INSPECTION METHODS, TEST METHODS, PROCESS CONTROL METHODS, AND ACCEPTANCE CRITERIA FOR QUALITY CONTROL OF MATERIALS, PROCESSES AND HARDWARE.	• ESTABLISH STANDARD DEVELOPMENT GUIDELINES AND DEVELOP NECESSARY BACKUP DATA AND PROCEDURES AS OUTLINED ABOVE FOR MATERIALS AND PROCESSES.

ORIGINAL PAGE IS
OF POOR QUALITY

TABLE 26. ESSENTIAL TECHNOLOGY DEVELOPMENT (Continued)

DEVELOPMENT NEEDS	APPROACHES TO EFFECT
QUALITY ASSURANCE METHODS (CONT'D)	
o MATERIAL ACCEPTANCE CRITERIA FOR FIBERS, RESINS, PREPREGS AND CURED COMPOSITES, INCLUDING DEFECT LIMITS, STRENGTH, ETC.	o NASA PROGRAM ON "DEVELOPMENT QUALITY ASSURANCE PROCEDURES FOR EPOXY-GRAPHITE PREPREG" WILL COVER SOME OF THE DEVELOPMENT REQUIRED FOR RESIN ANALYSIS SUCH AS LIQUID CHROMOTOGRAPHY.
o INSPECTION METHODS FOR DIMENSIONAL CONTROL. VISUAL AND NONDESTRUCTIVE METHODS FOR DETECTING PHYSICAL DEFECTS IN RAW MATERIALS AND HARDWARE. AUTOMATED MONITORING SYSTEMS FOR INSPECTION DURING LAYUP.	o DAMAGE TOLERANCE TESTING NOW UNDERWAY IN NASA PROGRAMS AND OTHER GOVERNMENT-FUNDED PROGRAMS WILL EVALUATE THE EFFECT OF MATERIAL DEFECTS ON MECHANICAL PROPERTIES AS AN AID TO ESTABLISHING ACCEPTANCE CRITERIA.
o TEST METHODS – CHEMICAL ANALYSIS OF RESINS, FIBERS, FIBER FINISHES, PREPREGS AND CURED COMPOSITES. MECHANICAL TEST METHODS, COMBINED WITH HEAT AND MOISTURE EXPOSURE, TO DETERMINE TENSILE, COMPRESSION AND OTHER PROPERTIES OF CURED COMPOSITES.	NOTE: ALL DEVELOPMENT OF QUALITY ASSURANCE METHODS SHOULD BE IN CONSONANCE WITH MATERIAL AND FABRICATION DEVELOPMENT.
o PROCESS SPECIFICATIONS – PROCESS CONTROL AND ACCEPTANCE CRITERIA FOR FABRICATED PARTS; INCLUDES AUTOMATED MONITORING METHODS FOR CURE CYCLES.	
NONDESTRUCTIVE MANUFACTURING INSPECTION	
• COST EFFECTIVE TECHNIQUES (AUTOMATED) FOR INSPECTING VARIABLE THICKNESS AND CROSS-SECTION STRUCTURES.	• NASA HARDWARE DEVELOPMENT PROGRAMS, SUCH AS THE ACVF AND THE COMPOSITE AILERON PROGRAMS, WILL INVOLVE DETERMINATION OF NDI EFFECTIVENESS AND ADAPTABILITY UNDER PRODUCTION SITUATIONS.
	• SUPPLEMENTAL ACTIVITIES NEEDED INCLUDE SURVEY OF EXISTING NDI METHODS AND STATUS OF NEW DEVELOPMENTS; EVALUATION OF PROMISING METHODS FOR IN-PLANT INSPECTION BY FABRICATION OF SPECIMENS INCORPORATING KNOWN DEFECTS; AND CORRELATION OF NDI RESULTS WITH PHYSICAL AND MECHANICAL PROPERTIES OBTAINED FROM MECHANICAL TESTS AND PHOTOMICROGRAPHIC EXAMINATION. THIS SHOULD BE DONE INITIALLY WITH COUPON SPECIMENS; THEN WITH SUBELEMENTS INCORPORATING CONSTRUCTIONS SUCH AS HONEYCOMB, HYBRID, COCURED ELEMENTS, BONDED DOUBLERS, FLAME SPRAY, ETC. FINALLY, VERIFICATION OF SELECTED PROCEDURES ON FULL-SCALE COMPONENTS.
	• IN CONJUNCTION WITH ABOVE ACTIVITY, CONTINUOUS MONITORING IS REQUIRED ON DEVELOPMENTS IN REALTIME DATA ACQUISITION AND CONTROL, MINICOMPUTER/MICROPROCESSOR ANALYSIS OF ULTRASONIC DATA, AND OTHER NEW TECHNIQUES TO ENSURE INCORPORATION OF PROMISING TECHNIQUES INTO THE EVALUATION PROGRAM.

TABLE 26. ESSENTIAL TECHNOLOGY DEVELOPMENT (Continued)

DEVELOPMENT NEEDS	APPROACHES TO EFFECT
NONDESTRUCTIVE MANUFACTURING INSPECTION (CONT'D)	
• PRODUCTION TECHNIQUES FOR DETECTING PHYSICAL PROPERTY VARIATIONS WHICH RESULT IN MECHANICAL PROPERTY DEGRADATION.	• DEFINE AND IMPLEMENT DEVELOPMENT PROGRAMS FOR NONDESTRUCTIVE INSPECTION (NDI) DETERMINATION OF SUCH VARIABLES AS RESIN CONTENT, MOISTURE, POROSITY, DELAMINATIONS, PLY ORIENTATION, MICROCRACKS, DEGREE OF CURE, AND RESIN-FIBER BOND. PRELIMINARY WORK HAS BEEN DONE BY INDUSTRY ON SUCH PROCEDURES AS DYNAMIC MECHANICAL TESTING, THERMO-MECHANICAL ANALYSIS, DIELECTRIC MEASUREMENTS OF MOISTURE, IMPROVED ULTRASONIC AND X-RAY PROCEDURES. • SUPPLEMENTAL ACTIVITIES ARE NEEDED TO IDENTIFY AND CATEGORIZE COMMONLY OCCURRING DEFECTS AND TO ESTABLISH SIGNIFICANCE, CRITICALITY AND NEED FOR DETECTION. SURVEY NDI AND ANALYTICAL PROCEDURES BEING USED OR DEVELOPED, AND EVALUATE SELECTED PROCEDURES ON COUPON AND SUBELEMENT SPECIMENS INCORPORATING VARIOUS CONSTRUCTIONS USED IN ACTUAL PARTS. THIS EVALUATION WOULD REQUIRE CORRELATION WITH MECHANICAL PROPERTIES AND MICROGRAPHIC EXAMINATION OF CROSS-SECTIONS. A FINAL STEP WOULD VERIFY SELECTED TECHNIQUES ON FULL-SCALE COMPONENTS.
IN-SERVICE NONDESTRUCTIVE INSPECTION	
• RELIABLE AND COST-EFFECTIVE NDI SYSTEM(S) FOR IN-PLACE DETECTION OF SERVICE-INDUCED DAMAGE. DOCUMENTATION OF IN-SERVICE INSPECTION METHODS.	• NASA'S PROGRAM, "EVALUATION AND DEVELOPMENT OF IN-SERVICE INSPECTION METHODS FOR GRAPHITE/EPOXY COMPOSITE STRUCTURES ON COMMERCIAL TRANSPORT AIRCRAFT," WILL ADDRESS THE FOLLOWING: STATE-OF-THE-ART SURVEY, ADAPTABILITY AND CAPABILITY OF CURRENT NDI SYSTEMS, ADAPTABILITY IMPROVEMENTS, IN-PLACE SIMULATED NDI ON PROMISING METHODS, AND EQUIPMENT/SYSTEM IMPROVEMENTS. FOLLOW-ON PROGRAM(S) WILL BE REQUIRED TO DEVELOP PROMISING METHODOLOGY AND TECHNOLOGY. • VERIFICATION OF THE RELIABILITY AND SUITABILITY OF THE DEVELOPED METHODS AND EQUIPMENT THROUGH APPLICATION ON COMPONENT MANUFACTURING AND TEST PROGRAMS.
IN-SERVICE REPAIR	
• REPAIR PROCEDURES SUITABLE FOR CUSTOMER FIELD MAINTENANCE WHICH PROVIDE RESTORATION OF STRENGTH AND STIFFNESS OF DAMAGED STRUCTURE.	• NASA PROGRAM ON "DEVELOPMENT, DEMONSTRATION, AND VERIFICATION OF REPAIR TECHNIQUES FOR GRAPHITE/EPOXY STRUCTURE FOR COMMERCIAL TRANSPORT AIRCRAFT," WILL INCLUDE SURVEYS ON DEFECT SENSITIVITY AND AIRLINE DAMAGE EXPERIENCE, AND WILL CATEGORIZE DEFECTS AND DEVELOP REPAIR CRITERIA. DEPOT AND FIELD LEVEL REPAIRS WILL BE EVALUATED ON COUPONS, SUBELEMENTS, AND LARGE AREA COMPONENTS. OTHER GOVERNMENT PROGRAMS ALSO COVER EVALUATION OF SMALL-AREA AND LARGE-AREA REPAIRS. • FOLLOW-ON PROGRAMS WILL BE REQUIRED TO IMPLEMENT REPAIRS ON PRODUCTION COMPONENTS, AND TO MORE FULLY EVALUATE FATIGUE AND DURABILITY CHARACTERISTICS OF REPAIRED COMPONENTS.

ORIGINAL PAGE IS OF POOR QUALITY

APPENDIX C

FACILITY AND EQUIPMENT REQUIREMENTS

The various facets of planning and designing a composite wing fabrication facility, the facility requirements for the development program and the corresponding requirements for a production program are described.

Facility Planning and Design

The principal factors to be considered in planning and design of a fabrication facility are: (1) types of equipment, (2) equipment sizes, (3) equipment quantities or replicates governed by production rates, and (4) space requirements including environmental control, work sequence, and flow. The aspects of composite wing fabrication which affect each of these factors in facility planning are discussed as follows:

Types of Equipment. - Elements of the overall process as established in the process development phases of this program will govern the selection of equipment types. Some of these processes with corresponding equipment considerations as presently conceived are described.

Material Storage and Handling: Perishable prepreg materials and adhesives will require refrigerators of various sizes to store materials prior to use. Refrigeration is also required during the manufacturing cycle where excessive time delays between lay-up and final cure are unavoidable.

Cutting of Prepregs: In cases where automated lay-up machines cannot be used, cutting of prepreg stock into required lay-up patterns may be required. Also some trimming of uncured, laid-up laminates is envisioned. This operation requires special cutting equipment such as water-jet or laser beam types for production conditions.

Lay-up and Preforming of Laminates: Cost consideration dictate the use of various types of automated lay-up and preforming equipment. Large lay-up machines for near-flat skin laminates or pre-plying of laminates prior to forming of shapes are envisioned. Preforming equipment for structural shapes such as pultrusion or roll-forming may be required.

Molding of Structural Configurations: In general, molding requires the application of heat and pressure in a specified manner to a shape controlled by a molding tool. Various basic methods currently exist, the selection of which depends on the structural configuration to be molded. Some of these basic methods and implementation equipment are: (1) bag molding where spaceheated autoclaves are normally employed; (2) the matched mold method which requires heated platen, hydraulic presses; (3) the pultrusion method adaptable to molding of structural stiffener shapes which requires special machines; (4) specially designed integral heat/pressure tooling which requires equipment to provide sources of heat and pressure, the nature of which depends on the media employed.

During the course of the program any new developments in resin curing technology such as use of microwave, infra-red or other types of radiant energy to achieve rapid polymerization will be investigated. They will be implemented in the facilities plan if the state-of-the-art has progressed to production status. These advanced techniques normally require parallel development in resin catalysis systems which may affect base resin properties.

Trimming and Machining of Cured Laminates: Conventional type equipment is envisioned for this operation employing special cutting and drilling tools. Some advanced cutting equipment such as the water-jet type will be considered.

Assembly: Assembly equipment selected depends on assembly methods established in the process development phase. The mechanical assembly method employing current fastener technology and equipment offers the simplest approach. Assembly of cured components by adhesive bonding or of uncured components by single-stage curing would most likely be done by a pressure bag method requiring autocalve type equipment.

NDI Inspection: This operation imposes a requirement for specialized equipment to facilitate a minimum cost operation.

Equipment Sizes. - Sizes of lay-up and curing equipment will depend on maximum wing component sizes to be accommodated. There are structural design and manufacturing trade-offs involved here which will be evaluated during structural concept development.

Equipment Replicates. - Production rates for specific components determine this requirement.

Building Space Requirements and Environmental Control. - Prepreg preparation and lay-up operations require control of air contamination, temperature and humidity. The ideal facility would be housed in one integrated facility. However, this concept may be modified depending on assembly methods selected. Where assembly methods involving adhesive bonding or single-stage curing are involved, it is mandatory that lay-up and assembly curing facilities by integrated. This requirement will prevent contamination and/or over-aging of adhesives and resins caused by excessive handling and transportation.

Development Program Facilities

Facilities acquisitions for the development program will consist of augmentation of existing production development facilities. Process development can be performed on prototype equipment not necessarily engineered or scaled for quantity production of full-scale wing components. The development facility will include capability of the following types:

- Autoclave
- Programmable Pultrusion Equipment
- Prepreging Equipment
- Infrared Curing Source
- RF Source
- Hydraulic Pressure Source
- Laser Energy Source
- Programmable Automatic Layup Equipment
- Fabric Weaving Equipment
- Ultrasonic Welding Equipment
- Microwave Energy Source

- Resistance Source
- Associated Vacuum and other Shop Aides

As the development program progresses, and preferred design and fabrication concepts are defined, analysis of production program requirements will be made. Cost and schedule estimates will be developed for tooling and equipment required for wing production.

Composite fabrication facilities required for test specimen fabrication and demonstration article layup will be provided by shared utilization of facilities available from other composite work. The production go-ahead on the L-1011 composite fin program is anticipated late in 1981. As a result, automated tape laying equipment, ovens, and refrigeration capable of supporting the wing development program will be available. Lockheed's existing 6.7 m (22.0 ft) diameter, 18.3 m (60.0 ft) length autoclave will accommodate the largest of the components planned in the wing development program.

Production Program Facilities

Manufacturing Engineering personnel will, as a result of their participation in the development program, develop a detailed facilities plan for wing production. Initial estimates of the types, quantities and cost of required facilities will be available near the end of the Design Concept Evaluation phase.

The facilities plan will include the results of the following effort:

- Coordinate development of the assembly breakdown to assure economical manufacture.
- Develop the Major Assembly Sequence Chart for the production program.
- Provide parametric requirements for elapsed time spread application to the first airplane.
- Develop material handling plan to evaluate process and flow requirements of assembly operations both in-plant and between plants.
- Compose narrative material describing requirements and activities of the manufacturing program.

- Assist the assigned planning personnel in organization and implementation of a functional mockup plan.
- Plan detail factory layout requirements - evaluate manufacturing space needs, coordinate with space available and forecast utilization plans.
- Prepare a packaging plan, and a transportation plan to ensure safe shipment.

Facilities for the production program will include area for the following items:

- Tape laying machine with multi-axis dispensing head with a series of heads on the same gantry, numerically controlled and programmed.
- Compression mold press, with steam heated platens to 480 K (400 F^{o}).
- Pultrusion layup machine with motorized material unwind dispensing and orientation racks, progressive preforming and final forming rolls, prebleed heating chamber, cutoff device and self-stacking rack. Used primarily in fabrication of hat sections.
- Deep freeze facility capable of maintaining 230 K (-40°F) under product load. Multi-level storage system and automated retrieval system. Area to be capable of storage of raw broadgoods and parts in-process in a prebled state.
- Central dust collecting systems with service distribution lines.
- Localized area dust collecting systems.
- Cutting tables - glass topped with roll dispensing racks. Prebutting of fillers, blanks, and patterns with automated knives.
- Flame spray equipment and accessories.
- Water jet trimming systems.
- Carbide saw cutting systems.
- Freezer chests, top loading, 230 K (-40°F), with product load
- Autoclave - 9.0 m (30.0 ft) diameter x 38.0 m (125.0 ft) long, 590 K (600°F), 1.7 MN/m^2 (250 psi), internal vacuum manifold system, inert gas generating system, CO_2 auxiliary storage tank system and programmed instrumentation.
- Oven-Prebleed, 7.6 m (25.0 ft) x 38.0 m (125.0 ft) long, 590 K (600°F), with vacuum system and internal vacuum manifold and thermocouple connection points. Class 1 oven instrumentation

- Ultrasonic test equipment.
- Cantilever storage racks.
- Standard work benches and special width work benches.

Automated tape laying equipment is essential for cost-competitive fabrication. The specifications for such equipment will be developed only after intensive investigation of available equipment and analysis of equipment manufacturing proposals in conjunction with the specific requirements of wing component fabrication. Table 27 contains a summary of graphite tape laying equipment now in use or under development in the industry.

Facility requirements for production wing assembly are expected to be similar to metallic wing assembly facilities. Areas will be provided within the confines of the building to isolate dust producing processes such as trimming, drilling, and routing. In addition, special contaminate free areas will be designated for such areas as aluminum flame spraying.

Assembly facility will also contain the following:

- Air conditioning system for heating, cooling and air filtration.
- Central vacuum pump system and service distribution lines.
- Convenience electrical outlet distribution.
- Monorail conveyor system.
- Stabilized bridge crane systems, radio controlled.
- Flame spray facility including flame spray booth enclosure, localized exhaust hood and ducting, fume scrubber and bag house.
- Tank seal facility.

The production facilities and cost plan will be updated as the development program progresses.

TABLE 27. - GRAPHITE TAPELAYING EQUIPMENT OF AEROSPACE MANUFACTURERS - 1977

OWNER/OPERATOR	MANUFACTURER	DESCRIPTION
Boeing - Vertol (U.S. Army)	Goldsworthy Head and N/C Positioner Atlas Chassis	6-Axis N/C Optical follower to generate N/C tape, 1.68 x 15.24 m (5.5 x 50.0 ft) bed
General Dynamics Fort Worth	General Dynamics/ Air Force/Conrac	3-Axis N/C 1.22 x 9.14 m (4.0 x 30.0 ft) bed; 7.62 cm (3.0 in.) tape
LVT	LVT design and built	3-Axis N/C real time QA devices, 1.22 x 9.14 m (4.0 x 3.0 ft) bed (used on A-7 wing)
Grumman Bethpage L.I.	Grumman and Goldsworthy	Flat 2-Axis, mylar and 1 ply graphite N/C, 7.62 to 30.48 cm (3.0 to 12.0 in.) tape (part of the Grumman automated line)
Rockwell International	RI and Goldsworthy Head	7.62 to 30.48 cm (3.0 to 12.0 in.) tapes, 3.66 x 4.88 m (12.0 x 16.0 ft) bed, no N/C
Northrop	Goldsworthy Head	Moving table, 2.44 m (8.0 ft) dia. photo electric cell cutoff, no N/C, fixed gantry
Bell Helicopter	Bell Helicopter	Makes wrapped spars (not laid), fiber placement
MDAC, Long Beach	Goldsworthy Head plus MDAC	6-Axis (XYZ, ABC) Model TDH-3000 (SME Paper EM 74-735) Overhead broadgoods dispenser (portable) used on ACEE DC-10 rudder program
Lockheed Calif. Co	Goldsworthy Head/ Calac design and built	3-Axis N/C 1.22 x 3.05 m (4 x 10 ft) table; 7.62 cm (3.0 in.) width tape broadgoods dispensing machine; 6-Axis 3.05 x 22.0 m (10 x 72 ft) bed
Hercules	Hercules	Automatic broadgoods preplying machine; continuous length; 1.22 m (4.0 ft) width; 5 to 6 ply thickness; 0°, $\pm 45^\circ$, 90° ply orientation

APPENDIX D

WING DESIGN CRITERIA AND STRUCTURAL REQUIREMENTS CONSIDERATIONS

Federal Aviation Regulations, Part 25 entitled "Airworthiness Standards: Transport-Category Airplanes" (Reference 2) provides guidelines for the establishment of structural design criteria for transport aircraft. Compliance to the design requirements of FAR, Part 25 is necessary to obtain certification of the airplane by the FAA.

The same structural design requirements are applicable to the proposed composite wing for which further acceptable guidelines are being evolved by both the industry and the FAA as new data on composite materials become available. Work on the composite wing will reflect both the current and the evolving requirements in its design and manufacture.

The intent of this document is to provide a general outline of the policies and type of data required to establish the design criteria and structural requirements for the design of a composite wing. In areas where criteria are nonexistent or are currently being evolved, a discussion is presented to indicate the general policy and type of substantiation data required. As with any document of this type, development and verification tests must be carried out to provide data for establishing the criteria and to demonstrate that the structure can attain the service life while meeting all the strength, durability and flight safety requirements as defined by the criteria.

General Structural Requirements

This section presents some general structural requirements that must be considered in the design of a composite wing.

Systems Interface Requirements. - The wing interfaces with the fuel system, hydraulic system, de-icing system, and the control system. All of these systems can impose constraints on the structural box which range from the minor environmental and mounting provision required by systems such as the de-icing system to major design considerations such as those imposed by the fuel and propulsion systems.

Fuel System: Provisions must be made in the structural box to account for the following fuel subsystems: fill and feed, measurement, venting and drain.

For the fill and feed system, penetrations of both the covers and substructure are required for routing the tubing and providing entry to the fuel tank for the valves and pumps. Mounting provisions are required for these components. Provisions for drain valves at the lower portions of each tank are required to minimize residual fuel and drain free water.

Fuel measurement requirements include penetrations in the structure for fuel probes and their associated electrical lines. In addition to these probes, which are generally mounted from the upper surface and may or may not be removable, holes are required in the lower surface for installation of sight gages.

The fuel venting system provides a continuous pathway from the fuel tanks to the wing tip to vent the fuel fumes during ascent (or while heating up on the ground) and to relieve the negative pressure created during descent. Penetrations through the substructure are required to provide for passage of a continuous duct to the wing tip vent box. The wing vent box contains a vent scoop which includes a flame arrestor and stand pipe.

Electrical System: The electrical power system imposes design constraints on the structural box to provide for the routing and mounting of the various power supply lines. Examples of these lines are: engine power supply and control lines; tip lights; control system servos; and system indicators such as control position overheat, etc. In addition, all components must be grounded and the wing box must be provided with a continuous electrical path (e.g., bonded aluminum strip) for the transmittal and discharge of static electricity as well as lightning strikes.

Hydraulic System and Control System: Currently control surfaces (leading and trailing edge devices) are either operated by individual hydraulic actuators or by mechanical means (screw jack) connected through gear boxes and torque tubes to a central hydraulic motor. In either case, mounting provisions and the introduction of concentrated loads will be imposed on the front and rear beams of the structural box. In addition, support must also be provided for the hydraulic supply lines from the wing engines and main landing gear. Present high pressure hydraulic lines operate in the range of 3000 psi (20.7 MPa); higher pressures are foreseen for the

1985 technology period. The wing box must be protected from, or designed to withstand, the shrapnel from ruptured hydraulic lines as well as the environmental effects of hydraulic fluid spills and seepage.

Propulsion System: Provision will have to be made in the wing structure and pylon to accommodate the routing of engine control and indicator lines, hydraulic power supply lines, pneumatic power supply and the electrical power supply lines. The engine pylon should provide a fire wall, but the wing must be designed to withstand overheating due to an engine fire. The wing must have a vapor barrier on the lower surface in the pylon area to prevent any seepage or leaking of fuel into the engine nacelle.

Structural Interface Requirements. - The major structural components, such as: the fuselage/wing interface, engine pylon, MLG support structure, etc., may pose structural requirements that could greatly impact the design of a composite wing box structure. Some of the general requirements and considerations associated with these components are discussed in the following text.

Fuselage Interface: The wing/fuselage interface structure must provide the load paths for the transfer of the wing shear (vertical and horizontal) and pitching moment. For a conventional low wing design, additional constraints are imposed on the interface structure to maintain the continuity of the pressure vessel at the intersection of the fuselage skin with the wing as well as below the pressure deck.

All of the above considerations will influence the design of the composite wing box in this region. At the fuselage skin to wing intersection, the combined effect of highly concentrated applied loads, and the need for compatible deformations under both temperature and load conditions, will probably require metal components and/or inserts incorporated in the design. Special attention to the laminae orientation in this region is required to control the anisotropy of the laminate.

Main Landing Gear Interface: The MLG imposes high concentrated forces and moments on the wing box structure. This load environment will most likely require reinforcement rib(s) and thick covers for the wing box to redistribute these loads. In addition, the use of metal components/inserts are most likely required to introduce the landing loads into the MLG support structure and wing box.

Engine Pylon Interface: The main attachments of the pylon, in addition to any other support linkage (e.g., drag link), impose concentrated forces and moments on the basic wing box. This condition requires special design considerations which most likely would include such items as: embedding metal fittings into the design of the front and rear beam designs, providing one or more internal reinforcement ribs and incorporating skate angles on the lower surface. These above considerations would be in addition to the more general requirements for routing the many engine supply lines and providing for accessibility for inspection and maintenance. The design of a firewall and vapor barrier could provide additional constraints on the design.

Control Surface Interface: Provisions must be made in the design of the wing box to accommodate the loads and designs of the control surfaces themselves or their auxiliary support structure. Among other considerations, the design of the wing box (mainly in the front and rear beam areas) must include local design provisions to accommodate such items as actuators, slat tracks and their attachments.

Quality Control. - In order to ensure that structure will meet the design objectives, a comprehensive quality control plan should be established and implemented. The plan should be responsive to special engineering requirements that arise in individual parts or areas as a result of potential failure modes, damage tolerance and defect growth requirements, loadings and local configuration, inspectability and as a result of local sensitivities to manufacture and assembly.

Repair. - It should be demonstrated by analysis and/or test that methods and techniques of repair will restore the structure to the condition required by FAR 43.13b.

Fabrication Methods. - Specifications covering material, material processing, and fabrication procedures must be developed to ensure a basis for fabricating reproducible and reliable structure. Additionally, manufacturing producibility considerations will be applied to alternate design concepts to ensure that cost weight tradeoffs are optimized.

Flammability. - The existing requirement for flammability protection of the aircraft is to minimize the hazards in the event ignition of flammable fluids or vapors occur. In addition, components readily affected by heat, flames, or sparks must withstand these effects.

The use of composite structure should retain this existing level of safety.

Compliance may be shown by analysis or tests that aircraft structure subjected to these hazards that are critical to safety of flight can withstand fire and heat in accordance with the definition of "fire resistance" in FAR paragraph 1.1.

Environmental Definitions and Effects

The sensitivity of composite materials to certain environmental considerations impose problems that are generally insignificant in the design of conventional metal aircraft. Some of the more important environmental considerations are: temperature/humidity, lightning, hail, ozone, and ultraviolet radiation. The following test discusses the first three of these environmental conditions and contains a general statement on some other important considerations.

Temperature/Humidity. - Temperature and humidity histories to which an aircraft will be exposed must be considered in depth. Climatological data has been collected from many areas of the world and should be used to help in the establishment of the design criteria. The interpretation of the data, however, presents some problems. These problems include the reasonableness of using extreme in temperature and humidity data or average data. Temperature and humidity profiles for individual airplanes may vary considerably depending on the route structures. Accordingly, some airplanes may be exposed to severe temperature and humidity conditions more often than other airplanes in the fleet. This difference in exposure must be accounted for in a rational manner in the establishment of design criteria.

The climatological data, once established, must be used in conjunction with the composite material emissivity and absorption qualities to establish the temperature and humidity levels which must be used in determining the composite material strength levels and allowables to be used for design.

Other factors that must be considered include the effects of prolonger exposure to direct sunlight and high humidity while the aircraft is sitting on the ground in still air. Certain areas of the structure will attain higher temperatures than others, such as the upper surface of the wing versus the lower surface. The presence of reflective surfaces or other external heat sources in the proximity of the wing must also be considered. The method for accounting for these phenomenon in design criteria must be determined.

A sample analysis was conducted to assess the effects of solar heating on the structural temperature of the wing box structure defined during the conceptual design study (Appendix A). The wing box geometry and the material distributions of the T300/5208 graphite/epoxy surfaces as defined for the baseline RE-1011 airplane during the subject study were used for this investigation. Structural elements at an inboard (IWS 122) and outboard (OWS 452) wing station were examined for fuel loading conditions of empty, half-full and full fuel tanks. Both upper and lower surfaces were assumed to have a sprayed aluminum coating with a solar absorptivity of 0.5 and a emissivity of 0.20. Figure 77 presents the maximum temperatures attained on the wing upper surface after an hour exposure to sunlight on the ground at an ambient temperature of 318 K (112°F).

The data show that a steady state wing upper surface temperature of 353 K (175°F) is reached when the fuel tanks are full. Conversely, with empty tanks the upper surface wing temperatures have not yet attained their steady state value with a minimum temperature of 369 K (204°F) indicated. The time-temperature histories of the blade-stiffened surfaces after ground soak are presented in Figure 78. The temperature variations start after a one-hour ground soak and then proceed through taxi, takeoff, and climb to an altitude of 3050 km (10,000 ft). The average temperature for the lower surface is also indicated. Significant reduction in lower surface temperatures are realized for the condition with fuel in the tanks.

Lightning Protection Considerations. - The application of composite structures reduces the inherent electromagnetic shielding and lightning current carrying capabilities achieved with electrically continuous aluminum. Most composite structures have some electrical conductivity but can be damaged structurally by high current flow through the fibers. The protection design concept must prevent lightning current from attaching to or transferring through the composite structures.

Lightning protection methods that will be considered are aluminum diverter strips, aluminum wire mesh and aluminum flame spray. Knowledge gained through the ACVF program, other Lockheed programs, Industry, NASA, Air Force and Navy research programs will be utilized in the overall lightning protection configuration.

The fuel system lightning development program will be one of the most important aspects of the entire protection program not only because of safety, but also because of the difficulty in arriving at designs which will meet the present severe FAA and CAA lightning protection requirements.

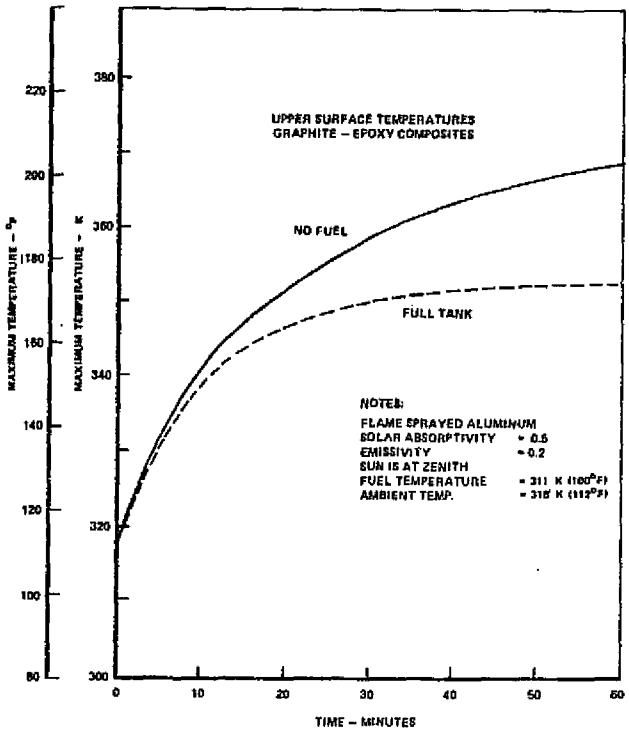

Figure 77. Ground Transient Solar Heating for OWS 452

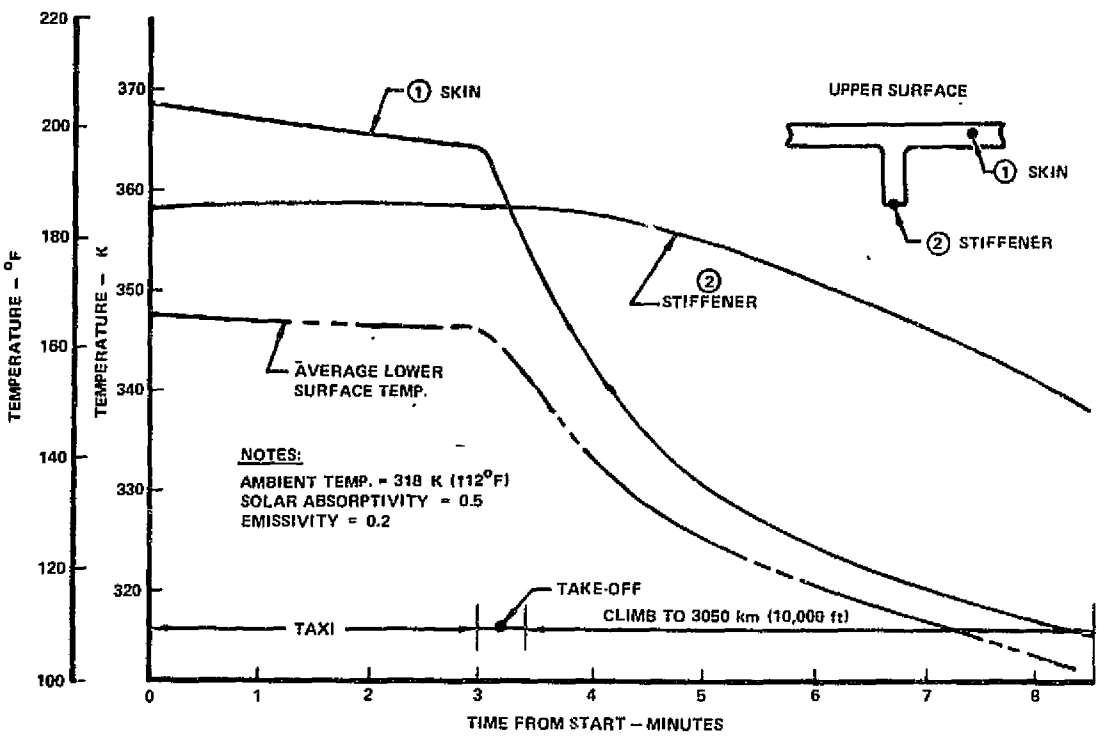

Figure 78. Time-Temperature History of OWS 452 Without Fuel

ORIGINAL PAGE IS
OF POOR QUALITY

Fuel tank component installations such as access doors, fuel quantity probes, fuel pump assemblies and other items mounted in the internal structure must be tested with artificial lightning discharges to assure that no internal sparking occurs from passage of lightning currents. Composite test panels must also be tested to verify the lightning protection design.

Since the entire aircraft becomes a radiating antenna at some frequencies, special considerations will be given to electrical bonding and noise interference from precipitation static charging during the design of the lightning protection system.

Hail. - A likely source of objects that can cause damage to the wing box covers is hail. Figure 79 presents the terminal velocity of free-falling hail at sea level conditions (data from Reference (8)). Damage from this source could occur on the ground on the upper surface or in flight on the upper surface and the forward portion of the lower surface.

In addition to the size and terminal velocity, the number of hailstones impinging on a composite wing structure of an airplane per unit area as a function of duration may also be of importance for both ground and flight operations. For instance, a single impact from a large size hail may produce nondetectable localized damage for which, on a one time basis, the reduced strength could be tolerated until the next inspection period. However, the impingement of small size hail on the damage area may cause further strength loss which cannot be tolerated. The work to be performed in this area toward finalizing hail impact criteria will consist of determining a representation of the number and size hailstone per unit area as a function of time from available existing data. These data will be used in a test program to determine the resulting panel deterioration, if any, from multiple impacts of small size hail, after initial damage.

Also to be investigated in finalizing hail impact criteria is the probability of encountering a given size hailstone, taking into consideration the random operation of various fleet sizes. The effects that can influence the probability of encountering a given size hailstone on the ground are the variation in number and duration of hailstorms with geographical location, and inflight, the length and location of the route.

Figure 80 is an example of a method for presenting hail criteria for on-the-ground and in-flight conditions.

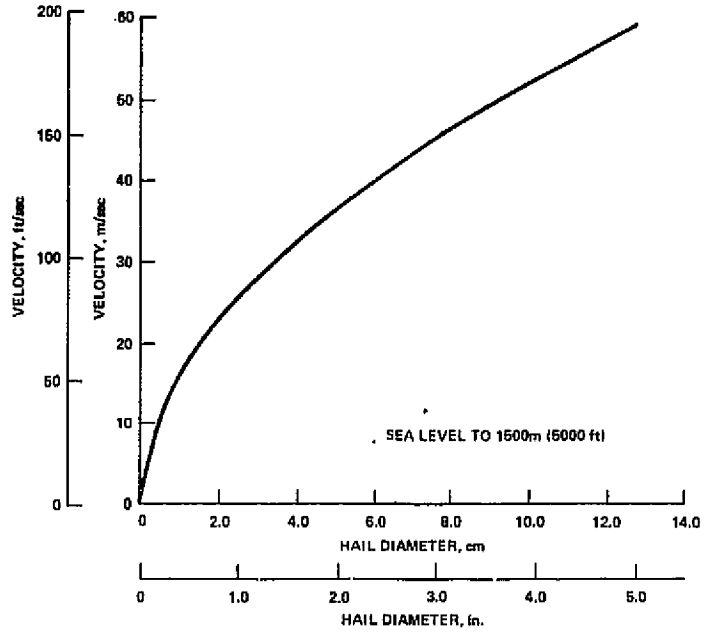

Figure 79. Hail Terminal Velocity

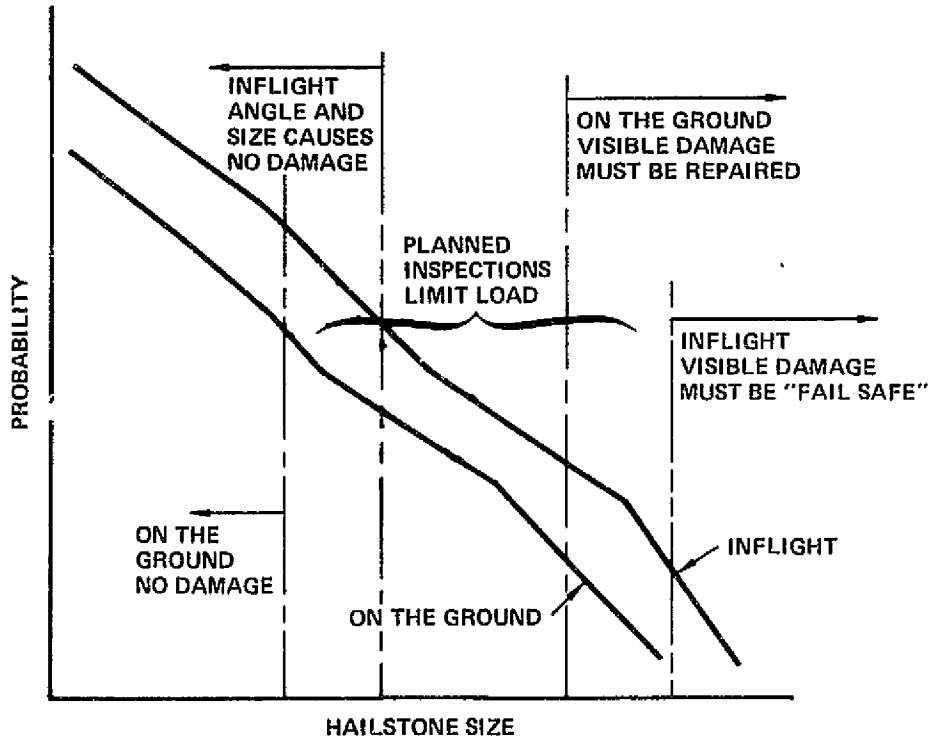

Figure 80. Example of Hail Criteria for On-the-Ground and Flight Conditions

ORIGINAL PAGE IS OF POOR QUALITY

General. - Weathering, abrasion, erosion, ultraviolet radiation, and chemical environment (glycol, hydraulic fluid, fuel, cleaning agents, etc.) may cause deterioration in a composite structure and must be considered in the design.

Material Properties

To provide an adequate design data base, environmental effects on the design properties of the material system should be established.

Experimental evidence should be provided to demonstrate that the material allowables are attained with a high degree of confidence in the most critical environmental exposures, including moisture and temperature, to be expected in service. The effect of moisture absorption on static strength, fatigue and stiffness properties, for the operational temperature range, should be determined for the material system through tests. The impact of moisture absorption and temperature cycling on the material system properties should be evaluated. Existing test data may be used where it can be shown directly applicable to the material system. Where existing data demonstrate that no significant temperature and moisture effects exist for the material system and construction details, within the bounds of moisture and temperature being considered, moisture and temperature studies need not be considered.

Foreign Object Damage

There are three categories of damage which must be considered to establish a criterion. The first type is concerned with impact by large objects such as might occur from a thrown turbine or fan blade or damage from some other external source. The nature of the damage from these sources is of a severity that the pilot will be immediately aware of the situation and will then cautiously operate the airplane until such time that the airplane can be landed for detailed inspection and repairs. The second type is concerned with impact by objects having energy levels sufficient

to cause damage that would not be obvious, resulting in the damage remaining undetected until a planned inspection. This category could include damage due to a blow from a heavy object such as might be sustained during a servicing operation in which personnel drop or accidentally strike the structure with a drill motor, fuel hose nozzle, fork lift, trucks and workstands. A related type of damage occurs when objects such as stones or bolts are thrown up from the runway during landing or takeoff or when parts of tires impact the wing as a result of rupture or thread shedding. Included in this category are runway ice and hail while on the ground or airborne. A third type of damage is that which occurs during the manufacture. This includes flaws such as voids, porosity, overlaps, gaps, resin rich, or resin starved areas.

Criteria for the above types of damage will differ depending on the length of the time period for which an airplane must be capable of safe operation with damage. Currently, FAA regulations concerning these types of damage are being revised. Table 28 shows, in principle, the variations of time and load levels associated with each type of damage. A more detailed discussion of damage types, their sources and related criteria is given in subsections that follow.

Starting with criteria already in use has the advantage of providing comparative data with tests already performed. Lockheed has been primarily concerned with testing for impact with both dropped objects and gun propelled pellets. The anvil weight used in the Lockheed tests is 1.22 kg (2.68 lbm) with a maximum drop height of 119 cm (47 in). The measured velocity at impact is 4.57-4.88 m/s (15-16 ft/s). Small diameter ice spheres, 2.5 cm (1.0 in), have been propelled at velocities up to 250 m/s (820 ft/s) to simulate inflight hail impact. Ice spheres of 2.5 cm (1.0 in) and 6.1 cm (2.4 in) diameters at lower velocities have been used to simulate on-the-ground hail impact.

A source of objects which can impact the bottom of the wing is debris from the runway. Bolts, nuts, pebbles, and ice are picked up by the wheels and thrown into the air. The location of the main wheels relative to the wing box makes it unlikely that objects thrown by the wheels will impact the box. A possible exception is the infrequent loss of tire thread and parts of the tire from rupture which can assume any trajectory and which does cause damage to the lighter structure of a metal airplane and conceivably could damage a composite structure without leaving a visible external sign other than a possibility of black marks from the rubber.

TABLE 28. DAMAGE TOLERANCE REQUIREMENTS (In Principle)

TYPE OF DAMAGE	SAFE OPERATION INTERVAL	SAFE LOAD LEVELS
Obvious in-flight	Remainder of flight	Reasonable expected loads during prudent operation for remainder of flight
Detectable during planned inspections	Inspection interval or time for positive detection	Limit loads
Initial defects	Expected service life of the aircraft	Ultimate loads

Reverse thrust on the engines applied during the landing run tends to kick up debris from the runway. To the best of Lockheed's knowledge, damage from this source has not occurred on the bottom surface of the wing box. However, it is a possibility which should be explored further in the establishment of design criteria.

A more likely source of damage, and one which occurs ocassionally, is caused by parts of the power plant, such as blades and discs, flying off and striking the surface. A strike of this nature would probably penetrate the surface causing a fuel leak and thus is a readily detectable type of damage.

Other sources of damage result from collision with equipment or objects around the aircraft. These collisions occur on the ground and can be inspected and repaired before flight. A similar type of damage can occur from workmen who drop tools on the top surface or strike either top or bottom surfaces with tools. This type of damage may be undetected and/or unreported; accordingly, structure subjected to this type damage must be fail-safe.

Table 29 presents a potential format for presenting criteria for various hazards that are likely to be encountered by the wing in-service and some preliminary values for illustration purposes. The following discussion and that contained in the section on environmental effects, provide some examples of the approach necessary to finalize a criterion.

TABLE 29. PROPOSED FORMAT FOR PRESENTING A SUMMARY OF HAZARDS TO THE WING BOX

HAZARD		VULNERABLE AREAS	LOADING CONDITION AT IMPACT	DETECTABLE	PRELIMINARY CRITERIA			
					OCCURRENCES	WT. OR SIZE	IMPACT VELOCITY	COMMENT
Hail		Upper surface	Inflight gusts	No	①	①	249 m/s (820 fps)	Impact angle .024 rad (14 deg) to wing surface
			On ground	No	①	①	46 m/s (150 fps)	Impact angle .157 rad (90 deg) to wing surface
Runway Debris		Under surface	Landing nose wheel touchdown	No	-	1.36 kg (3.0 lbm) 0.11 kg (0.25 lbm)	Max 70.1 m/s (230 fps)	Impact angle relative to wing surface .052 rad (30 deg)
Tire Tread	Nose Wheels	Under surface	Takeoff and landing	No	1 in every 1.4E5 flights	2.72 kg (6.0 lbm)	Max 76.2 m/s (250 fps)	Impact angle .009 to .052 rad (5 to 30 deg) to wing surface
	Main Wheels	Under surface	Takeoff and landing	No	1 in every 5.9E3 flights	2.72 kg (6.0 lbm)	Max 76.2 m/s (250 fps)	Impact angle .034 to .157 rad (20 to 90 deg) to wing surface
Tire Tread	Nose Wheels	Under surface	Takeoff and landing	No	1 in every 1.8 E7 flights	2.72 kg (6.0 lbm)	①	Impact angle 0 to .026 rad (0 to 15 deg) to wing surface
	Main Wheels	Under surface	Takeoff and landing	No	1 in every 2.0E5 flights	2.72 kg (6.0 lbm)	①	Impact angle .034 to .157 rad) (20 to 90 deg) to wing surface
Tools		Upper surface	On ground	No	-	0.11 kg (0.25 lbm)	4.6 m/s (15 fps)	Impact angle .157 rad (90 deg) to wing surface
Servicing Equipment		Upper and under surface	On ground	Yes	-	-	-	-
Engine parts		Under surface	In flight	Yes	1 in every 5.0E8	1/3 Turbine disc 45 kg (100 lbm)	146 m/s (480 fps) plus 560 rad/sec	Impact angle .017 to .122 rad (10 to 70 deg) to wing surface

① Value to be determined

Runway Debris. - From tests performed on gravel runways (Reference (9)), the only time that gravel was thrown high enough to impact the airframe was during wheel spinup at landing impact. In this condition the spray pattern of the main gear is such that debris will not contact the wing box. Accordingly, only debris thrown by the nose gear at wheel spinup must be considered in finalizing criteria for runway debris.

Thread Separation and Rupture Shrapnel. - Tire thread loss and rupture occurs during periods of high tire stress which is associated with takeoff and landing operations. If thread is lost or the tire ruptures prior to takeoff rotation, the takeoff is usually aborted. Because the tire shrapnel leaves black marks on surfaces that are contacted, inspections can be readily made and repairs effected if necessary. As part of the program the probability of becoming airborne with damage from tire shrapnel will be investigated in order to ascertain if a criterion requiring that the wing structure be capable of meeting limit operating conditions to the next inspection period is needed.

Tire shrapnel from thread separation and from rupture can vary considerably in size. The variation in shrapnel size was not included in the determination of the probabilities presented in Table 29. The probabilities and the size of shrapnel will be finalized using airplane operators' and tire manufacturers' data, including qualitative as well as quantitative information.

A representative value for the shrapnel impact velocity resulting from tire rupture will be determined from experience, if sufficient data are available, or by calculation using analysis of a similar nature such as associated with bomb bursts. Included in both the rupture and thread separation will be a representative rotational velocity to be combined with the translational velocity to provide the most critical condition considering the trajectory impact angle.

Tools. - Although a typical drop height and, hence, the impact velocity can be readily determined, there are numerous combinations of weights and shapes of probable contact points for tools. A matrix of contact points, represented by radii, and weights will be assembled using typical tools. Tests will be performed to obtain data to supplement available test data. These data will be used to establish some empirical relationship between parameters such as weight and radius of the contact point. Wherein damage to the wing upper surface could have occurred from a tool

impact, but not be visible, the empirical data will be used to determine whether the structure is to be replaced or operations can continue to the next inspection period.

Servicing Equipment. - This equipment is the mobile units used to replenish and load the airplanes. Impacts will occur mostly on the leading and trailing edge of the wing and, in addition, would be immediately known such that proper inspections can be performed. Accordingly, no criterion will be established for this condition.

Engine Parts. - Uncontained shrapnel from an engine can vary in size from less than one-half kilogram up to one-third segments of turbine discs weighting over 45.5 kg (100 lbm). Most parts will have sharp edges which will cause them to cut and/or scratch surfaces impacted. This cutting action is enhanced by the rotational velocity imparted along with the translational velocity. For example, a one-third rotor disc (a classical failure) weighting over 45.4 kg (100 lbm) can have a rotational velocity of 560 radians per second along with a translational velocity of 146.3 m/s (480 ft/sec) after cutting through an engine nacelle. Engine failures of this nature are immediately known to the crew and because the extent of damage to the primary structure is not known, care is normally exercised to minimize loads for the remainder of the flight. Inspections after an occurrence of this nature are extensive.

Fatigue and Damage Tolerance

A fatigue and fail-safe policy for a composite wing must be established to provide a structure which has unlimited life in service while meeting all the strength, durability and flight safety requirements of its mission.

The fatigue and fail-safe design policies must meet or exceed the current requirements defined in FAR 25, (Reference 2). Examples of specific policies applicable to composite wing structure are given in the following sections.

Fatigue. - The basic fatigue policy for a composite wing is that the structure shall not be life limited in operational service. This means that with normal operation, inspection, maintenance, and repair, it is intended that the ultimate retirement of the structure, when it occurs, would be for reasons other than

structural fatigue, economic obsolescence, accidental damage, or other unpredictable causes. An unlimited life structure can be achieved by the proper choice of materials and processes, design stress levels, detail design quality, and adequate protection against corrosion, lightning, and foreign object damage.

Fatigue Loads and Environment: Fatigue loadings and environments will be defined for the airplane. The fatigue loads must include a representation of the operational loads for the conditions specified in Sections 25.321 through Section 25.511 of FAR 25 and for other loading conditions that are likely to occur during the life of the aircraft. Special emergency loading conditions, loading conditions resulting from a prior readily detectable failure, and other loading conditions will be reviewed and if warranted will be considered as part of the fatigue loading. In addition, the loads induced from deflections and thermal expansion in adjacent connected structure shall be considered. The design environment will be representative of the most severe humidity and temperature profiles to which the aircraft can be expected to be exposed in operational service.

Material and Processes: The basic material system(s) selected for the composite wing structure will be fabricated to applicable material and process specifications. Where data are not available for these specific materials and processes, fatigue tests, including spectra tests, will be conducted to determine the suitability of the material or process for this application. The effects of environment on the strength and durability of the composite material will be fully evaluated by testing and allowed for in the design.

Test Requirements: Development tests must be carried out to provide data for design and to demonstrate the attainment of the design requirements. Fatigue testing of material coupons, structural elements, subcomponents, and large-scale wing components must be conducted.

Fail-Safe. - A fail-safe policy will be established to ensure that flight safety is maintained in the event of structural damage of reasonable magnitude. Such damage may arise from unreported accidental impact, minor collision, turbine disk penetration, small arms fire, or other sources as well as fatigue. A detailed discussion of the possible damage conditions is presented in the Foreign Object Damage section.

Fail-Safe Loads: A composite wing structure shall be designed such that for any specified type and level of fail-safe damage, it will sustain 100 percent limit load of certain conditions.

Damage Tolerance Requirements: Fail-safe structures shall be designed for several types of assumed damage. Examples of the types of damage to be considered are:

- Any single member in the substructure completely severed. For fail-safe purposes, a single member is any redundant structural member or that part of any member of several elements where the remaining part can be shown to have a high probability of remaining intact in the event of the assumed failure. It must be demonstrated that the damage to the assumed severed part must be readily discoverable by normal inspection methods.
- A delamination between any two separately cured composite members which are adhesively bonded together. The extent of delamination shall be between either effective delamination stoppers (such as mechanical fasteners of joints) or the maximum extent of delamination that could occur before being detected by normal inspection procedures.
- Delamination between individual plies at the midplane of skin surfaces and shear webs. The extent of delamination shall be assumed equal to a circular area with a diameter equal to the distance between effective delamination barriers or the maximum extent of delamination that could occur before being detected by normal inspection procedures. Delamination barriers are considered to be mechanical splices or a row of fasteners spaced so as to prevent extensive delamination. A reinforcing member either integral or bonded to the skin is not considered an effective delamination barrier.
- At any location in external skin surfaces, a 30 cm (12 in) long cut through the skin and any members integral with or bonded to the skin.
- At a cutout, a cut through the skin or web extended from the edge of the cutout to an effective damage barrier. The direction of cut for each case should be based on a rational mode of damage initiation and growth. An

effective damage barrier in this case is considered to be a separately cured composite member either mechanically fastened to the skin or adhesively bonded and mechanically fastened to the skin with sufficient fasteners to prevent extensive delamination. The effectiveness of other types of barriers must be demonstrated by testing.

- All fail-safe mechanical joints and skin splices shall be designed to have sufficient shear lag to distribute loads from the failed section. This can generally be achieved by designing the joint to be bearing critical. Sufficient strength and ductility shall be provided by the fasteners to prevent progressive shear failure or progressive tension pullout of the fasteners.
- For local areas of the structure not meeting any of the above damage criteria, it must be shown by tests that the maximum extent of damage that is likely to be missed by a specified-in-service inspection technique must not grow to a critical size for the fail-safe loading condition within a given check inspection period.

For all damage cases it must be demonstrated by analysis and/or test that detectable damage will propagate slowly under normal operational loads so that detection and repair are ensured before reaching the fail-safe damage size. Also the occurrence of any single damage case will not result in flutter divergence, uncontrollable vibration, or loss of control at speeds up to the V_D boundary.

Test Requirements

To accomplish the transition from current material and practices to use of composite in wing primary structure, extensive developmental and verification testing will be required. The scope of these tests must be such as to provide the confidence that there are no technological factors inhibiting the use of composite structure in commercial transport design. These tests must provide the necessary data to completely characterize the material system as well as to verify the adequacy of the basic design.

The orderly development of this technology base requires a test program that progresses from small coupons to subcomponents and finally to large full-size components. Guidelines for these tests are presented in the following text with some examples of specific test requirements stated.

Material Characterization Test. - The characterization of the basic material system(s) must be conducted initially in any test program to provide the data base for the design effort. In addition to strength and stiffness, some other considerations that must be identified early in the test program include: moisture absorption, hygro-thermal expansion, the influence of hygro-thermal cycling on properties, environmental degradation of properties, free-edge delamination, the effects of interlaminar shear and hole size effects.

Proof of Structure (Static). - The static strength of the composite design should be demonstrated through a program of component ultimate load tests, in the appropriate environment, unless experience with similar designs, material systems, and loadings is available to demonstrate the adequacy of the analysis supported by subcomponent tests. The component ultimate load tests may be performed in an ambient atmosphere if the effects of the environment are reliably predicted by coupon and/or subcomponent tests and are accounted for in the static test results.

Structural static testing of a component may be conducted on either new structure or structure previously subjected to repeated loads. If new structure is used to determine proof of compliance, coupon tests should be conducted to assess the possible material property degradation of static strength after the application of repeated loads and should be accounted for in the results of the static test of the new structure.

Composite designs that have low operational stresses relative to ultimate strength, or designed by fatigue, may be substantiated by analysis supported by coupon and/or subcomponent testing.

Proof of Structure (Fatigue/Damage Tolerance). - The evaluation of composite structure should be based on achieving a level of safety at least as high as that currently required for metal structure.

All structure covered by FAR PART 25.571 and 29.571 should be evaluated in accordance with the following sections:

Fatigue (Safe-Life) Evaluation: The fatigue substantiation of components should be accomplished by full-scale component fatigue tests accounting for the effects of the appropriate environment. Sufficient component, subcomponent, or coupon tests should be performed to establish the fatigue scatter and environmental

effects. The scatter factor determined should provide equivalent safety to that of conventional metal components. It should be demonstrated during the fatigue tests that the component stiffness has not changed to the extent that safety of the aircraft would be impaired.

Damage Tolerance (Fail-Safe) Evaluation: The nature and extent of tests on complete structures and/or portions of the primary structure will depend upon applicable previous damage tolerant design, construction, test, and service experience on similar structures.

Experience with FAA-approved designs must be available in the long term to demonstrate the adequacy of the damage tolerant approach.

In the absence of experience with similar designs, FAA-approved structural development tests of components and subcomponents should be performed. These tests should demonstrate that the residual strength of the structure can withstand the specified limit loads (considered as ultimate) and be consistent with initial detectability and subsequent growth of the damage under repeated loads, including the effects of temperature and humidity. Crack growth rate data should be used in establishing a recommended inspection program. These tests must be completed to establish the damage tolerance base for future certification of primary advanced composite structures.

The effects of moisutre and temperature should be accounted for by adjustment of the test load spectrum or damage growth time from the results of separate repeated load tests of coupons of subcomponents.

The residual strength tests to the specified limit loads should be performed on the development test component with appropriate damage simulation. The structure must be able to withstand static loads (considered as ultimate loads) which are reasonably expected during completion of the flight on which damage resulting from obvious discrete sources occur (i.e., uncontained engine failures, hail stones, etc.). The extent of damage must be based on rational assessment of service mission and potential damage relating to each discrete source.

Sonic Fatigue

Wing structures such as the area aft of the rear spar, the ailerons, flaps, vanes, slats, and main undercarriage doors are subjected to a high noise

environment during landing and takeoff. The high noise levels may occur in conjunction with high surface temperature and humidity. These structures are also subjected to impact from hail, debris thrown up by the tires or by tools dropped on the structure during routine service or even during fabrication. The impacts may produce fiber damage and/or delaminations not visible by surface inspection and difficult to detect by non-destructive testing.

The sonic fatigue design criteria is that the structure must be designed to withstand the acoustic loading without fatigue failure throughout the design life of the aircraft. In the event that strict adherence to this policy leads to undue complexities and/or weight penalties, the aircraft structure is to be designed to meet the fail-safe requirements. The object of the fail-safe policy is to ensure that flight safety is maintained in the event of structural damage of reasonable magnitude. The impact sensitivity of graphite fiber composites requires that impact damaged structures which are simultaneously subjected to high acoustic environment must meet the fail-safe requirement.

The general sonic fatigue design criteria can be met by any of the following methods:

- Sonic fatigue analyses, based on empirical random fatigue data for critical structural components, which indicate an adequate margin on stress level for a mean life equal to the design life.
- Sonic fatigue analyses substantiated by existing test data on similar structural configurations which indicate a mean life twice that of a design life.
- Analysis of test data on the actual structural component (multi-bay type) which indicates a mean life greater than the design life.

The empirical random fatigue and structural response data employed in the above procedures must include effects of adverse environments such as humidity and temperature.

In the past, crack growth due to random acoustic loading has not been included in the sonic fatigue criteria. However, the poor impact strength of graphite fiber composites raises the possibilities of structures with undetected fiber damage. Thus, the sonic fatigue resistance of damaged structure may form the basis for the future design criteria of composite structures. Analysis procedures are available to predict the response of cracked panel type structures. However, the analysis procedures are dependent on empirical random crack growth data.

The difficulty of inspecting internal structure requires that the sonic fatigue resistance and also impact resistance of the internal structure should be better than the surface skins.

The relative fluid state of current structural design concepts has prevented the acquisition of empirical data suitable for design purposes. The very limited available random fatigue data is only applicable to a single fiber and resin system now out of favor, a single fiber orientation, and fabrication which is not cost effective. The current trend, for cost reduction purposes, is towards single-stage cure integrally stiffened composite structural fabrication. Sonic fatigue capability is highly dependent on the detailed design. In the integrally stiffened panels, the panel-stiffener junction is the critical location in the design. Potential failure modes at this location are interlaminar shear, delamination from peel type loads introduced by face sheet bending and fiber fracture. It is necessary to develop random fatigue data for the critical locations prior to the final design stage in order to optimize the design. The improved sonic fatigue capability of the graphite fiber composites over aluminum alloy requires optimum structures to be used in the nonlinear response region. No analysis method is currently available to predict nonlinear stiffened composite panel response to random acoustic excitation. This analysis capability needs to be developed.

No data is currently available on the response of cracked composite panels. No random crack growth data is available for composite panels. Crack growth or flaw growth in composites can be adversely affected by the higher random stress levels (nonlinear) in sonic fatigue optimized panels. The most critical damage or crack location, together with its subsequent behavior and growth rate, remains to be established by testing.

Damping studies conducted on free-free graphite fiber beams indicate material damping comparable to aluminum. The majority of damping in wing and fuselage is assumed to come from the structural joints of riveted construction. Integrally stiffened one-piece machined aluminum panels exhibit very low structural damping. The implication on integrally stiffened graphite fiber construction or even bonded stiffener construction is that the structural damping could be much less than for riveted metal wings. Damping could be added artificially using uniaxial high modulus graphite fiber constraining layer damping treatment. This has been tested at Lockheed on a 163 cm (64 in) long, 15.2 cm (6 in) deep aluminum channel section

beam. Added damping would, however, result in some reduction in the structural efficiency.

Flutter Criteria

The design of the wing box, control surfaces and major component support structure must meet the minimum stiffness levels necessary to meet the flutter requirements of no less than 3-percent damping up to V_D and 20-percent speed margin above V_D. Component support structure includes leading and trailing edge control surface attachment and actuation backup structure as well as propulsion system support structure. The approach to the design and analysis of composite material structures, to provide flutter safety, is basically identical to that for metal structures. In fact, a more optimum structure, in terms of minimum weight, can be realized as a result of the greater capability of tailoring the structure, for example, to meet specific levels of bending and torsional stiffness. In general, it is expected that methods and procedures will follow those established for metal structures.

Crashworthiness

The present approach to crashworthiness of the airframe is to assure that occupants have every reasonable chance of escaping serious injury under realistic and survivable crash conditions. The use of composite structure in areas where failure would create a hazard to occupants should be shown to have crashworthiness capability equivalent to conventional structure materials in dimensions appropriate for the purpose for which they are used. In general, this equivalency would be shown by comparative analysis supported by tests as required.

APPENDIX E

DEMONSTRATION ARTICLE DEVELOPMENT OPTION

The selected articles to demonstrate and validate technology readiness are presented as the last task of the Wing Structure Development Program plan. A major engineering and manufacturing effort was also proposed as a wing structure development program option and presented here for planning information only. The proposed plan encompasses the detailed engineering design of a significant portion of a high aspect ratio commercial transport wing shown in Figure 81. The wing box demonstration article, which is represented by the shaded area of the figure, consists of approximately 40 m^2 (500 ft^2) of planform area. This region of the wing is highly loaded; contains fuel; interfaces with the main landing gear, propulsion system and control surfaces; and includes the wing-to-fuselage major production joint.

The option was planned in sufficient detail to define the scope of the task, to develop engineering, manufacturing and testing schedules, and to estimate the resources required to perform the various subtasks. Consideration for facilities and equipment needs to build the demonstration article was also made. The detailed schedule and significant milestones are shown in Figure 82.

Detail Design and Analysis

Layout and detail drawings required to fabricate the demonstration article (Figure 83) will be developed. The project will operate as for a prototype model, thus eliminating the massive drawing system required for a production airplane. In addition, it is postulated that the majority of layouts, assembly, and detail drawings will be drawn using the Lockheed-California Company CADAM (Computer Augmented Design and Manufacturing) interactive computer graphics system. Significant reduction of time span, manhours, and cost of drawing the composite wing structure is projected.

A more detailed finite element structural analysis model will be developed to support the design-analysis effort. The design loads produced in the preliminary design will be reviewed for completeness and supplemented as required. The effects of local loads from the landing gear, engine pylon, and control surfaces will be included in the design.

ORIGINAL PAGE IS
OF POOR QUALITY

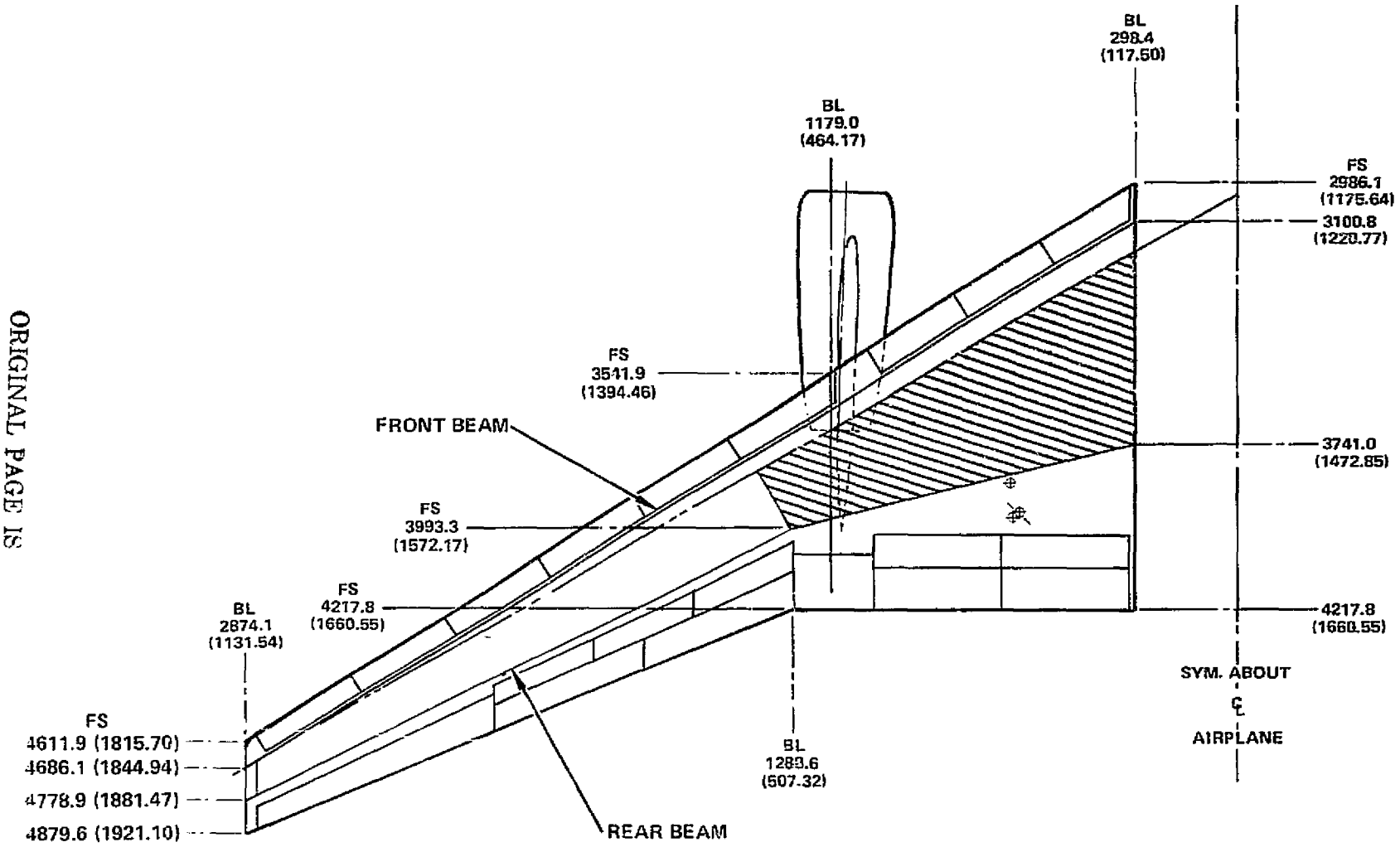

Figure 81. Relationship of Demonstration Article Option and Total Wing Planform

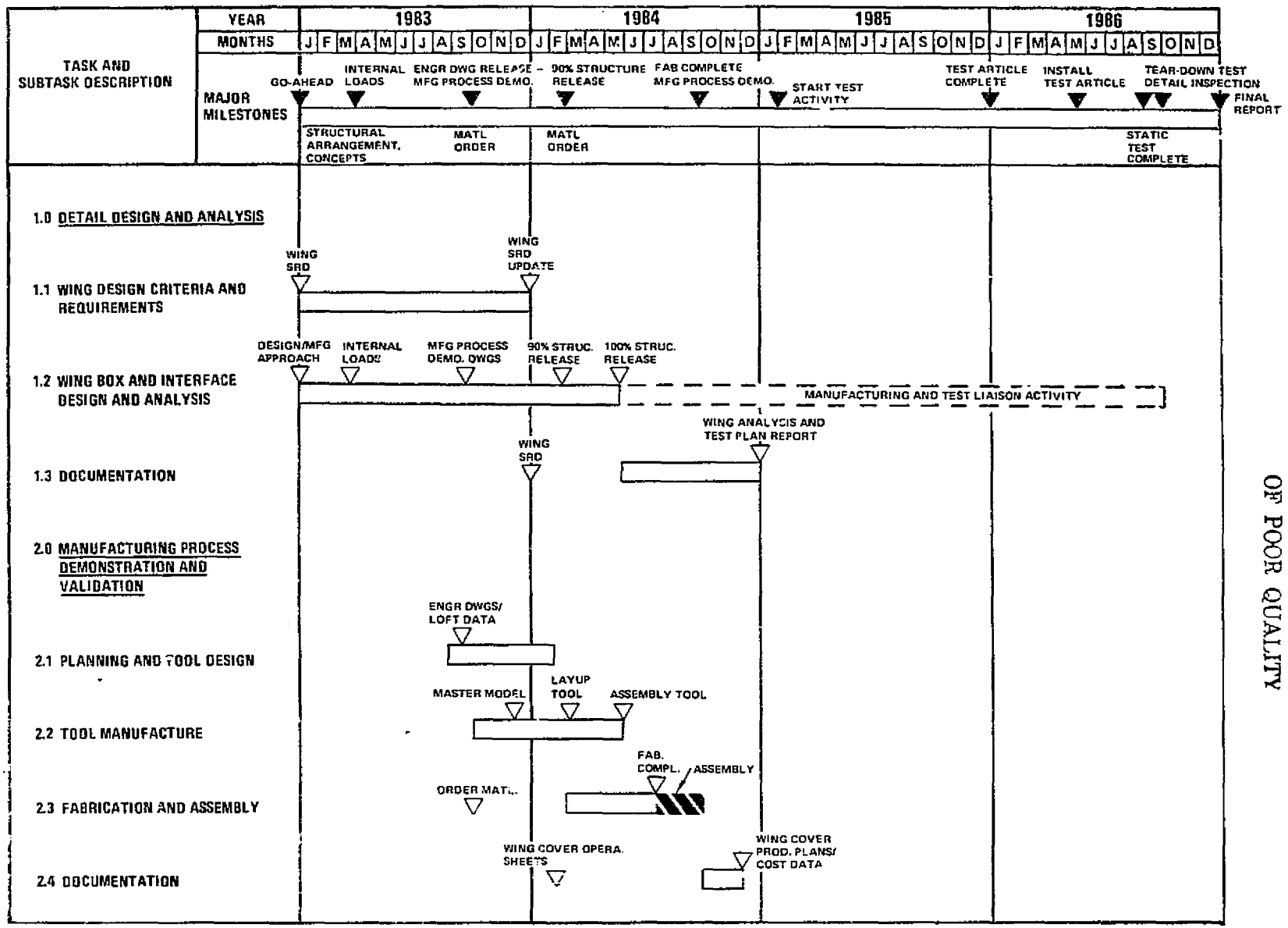

Figure 82. Demonstration Article Development Option Schedule

ORIGINAL PAGE IS OF POOR QUALITY

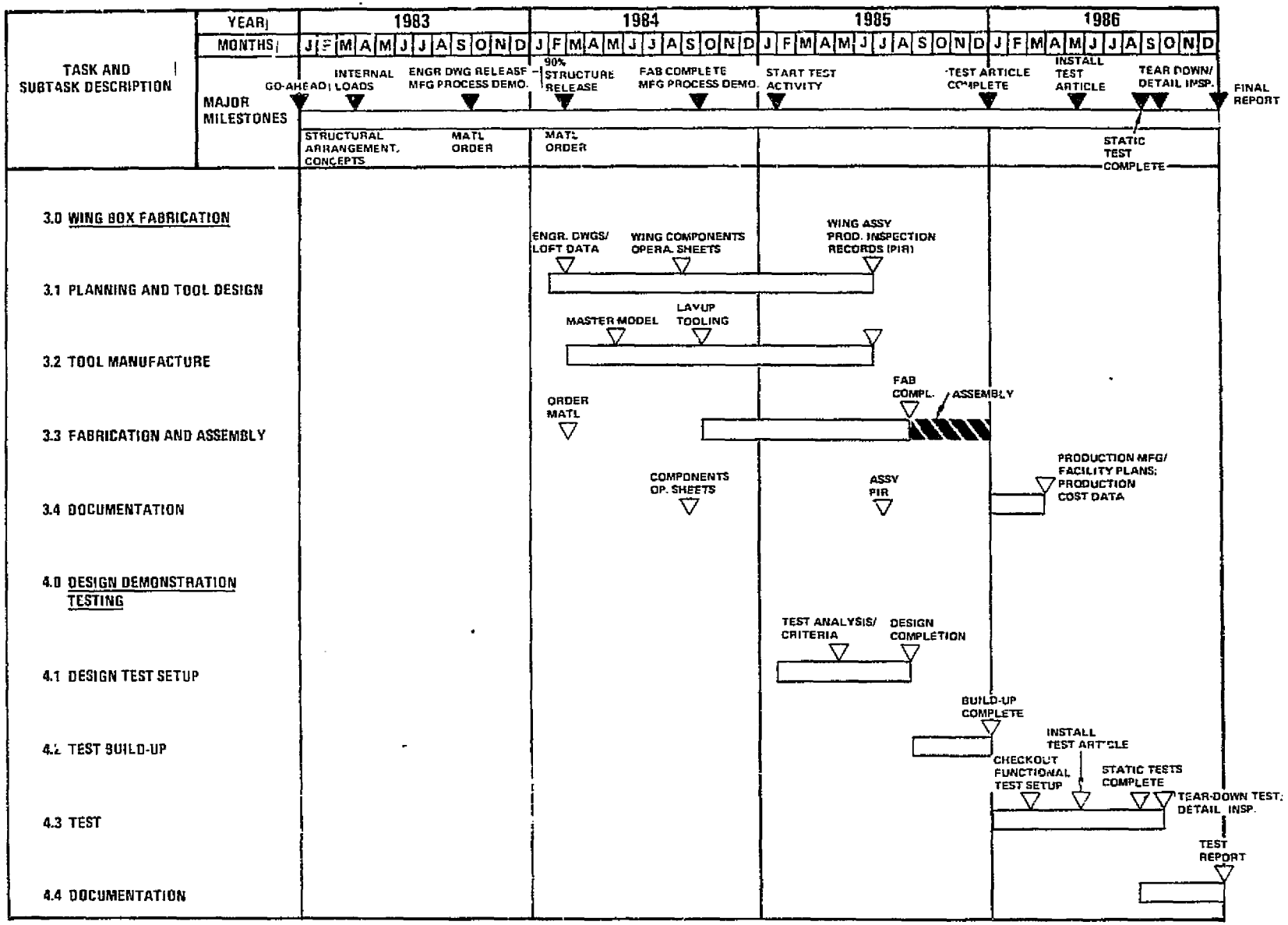

Figure 82. Demonstration Article Development Option Schedule (Continued)

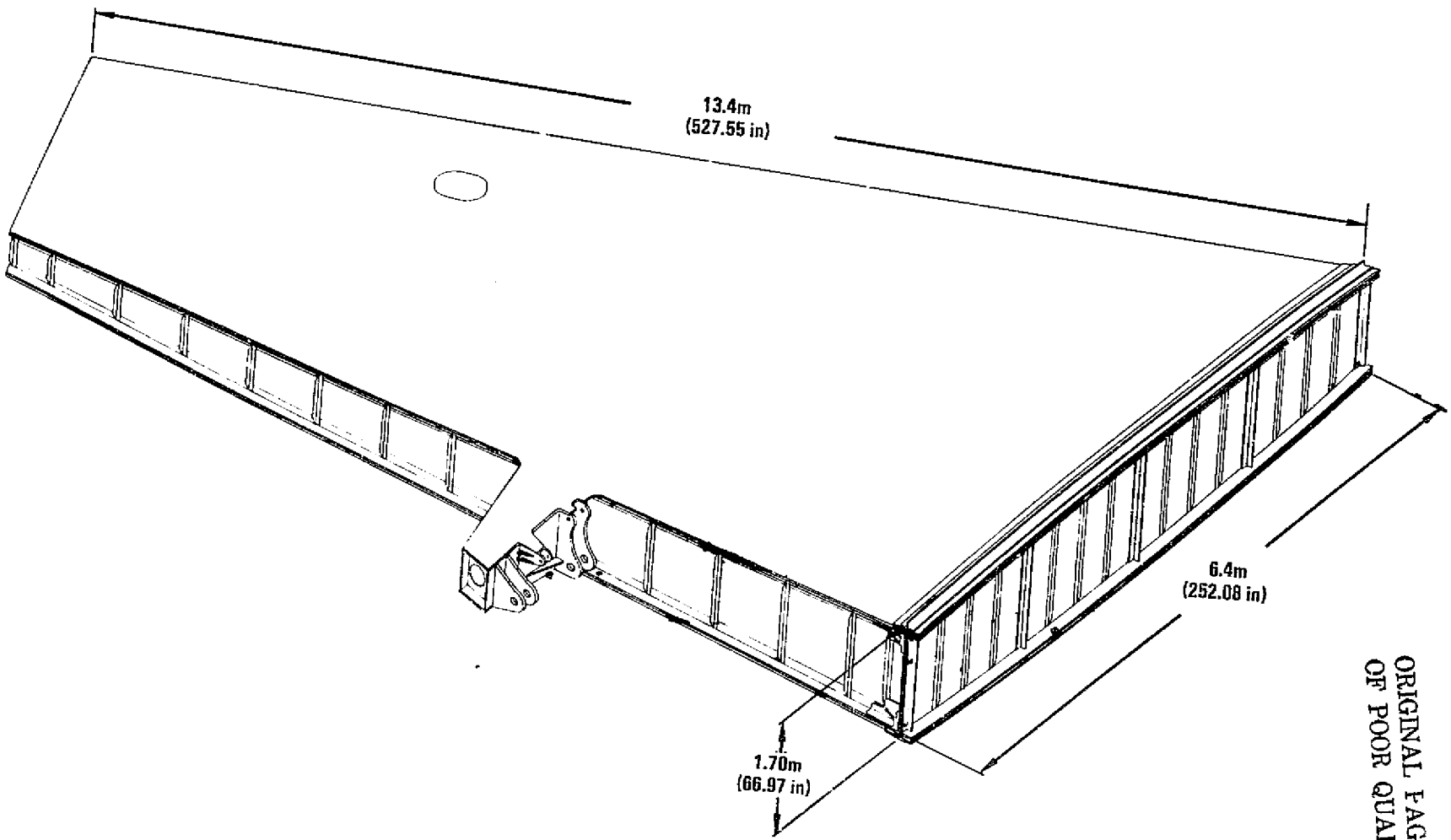

Figure 83. Demonstration Article Option for Technology Readiness Verification

ORIGINAL PAGE IS
OF POOR QUALITY

The key factors that must be addressed in the decision process will be verified and documented. These include:

- Assembly strain control
- Accountability of thermal strains
- Layup considerations for component design: (1) static strength and stiffness, (2) fatigue and notch sensitivity, (3) buckling, (4) residual strains and stacking sequence, (5) crack propagation/softening strips, (6) impact, (7) multiple groups - cost vs. interlaminar shear, (8) tape vs. fabric, (9) tapering technique - cost vs. weight.
- Metallic interface corrosion protection
- Bonded joints - step lap vs. scarf
- Mechanical joints - pitch/ED vs. layup
- Drilling and machining
- Tooling for control of critical dimensions (built-up assemblies, fit tolerance on secondary bonds)
- Peel and flatwise tension limitations for cover-substructure interface joints
- Test plans for demonstration tests
- Analysis reports substantiating the design

Wing Box Fabrication

The proposed demonstration article will consist of a complete wing box extending 13.4 m (525 in) outboard from the root joint. The box will include the upper and lower skin covers, the front and rear spar and sixteen full-size ribs. Figure 83 depicts this assembly. All components will be fabricated on production-type tooling by production personnel in a production environment. The fabrication of the components and the assembly of the components into a structure which meets

Engineering and Quality Assurance requirements will demonstrate the validity of all tooling and processing concepts involved. Further, it will demonstrate that all contributing organizations have the understanding and ability to proceed with a composite wing production program.

Additional detail on typical tooling and fabrication processes involved in manufacture of wing components are described in Appendix A.

Demonstration Tests

A series of static tests will be conducted on the full-scale demonstration article. The test article represents a major portion of the primary wing box, extending from the wing root joint outboard to the break in the rear spar. It includes the support structure for the main landing gear, the engine pylon, and control surfaces.

The wing box structure will be subjected to limit load tests for selected critical conditions, fail-safe tests, and an ultimate load test for the most critical condition. Included will be tests of specific local structure, e.g., the landing gear and pylon support structures. In the fail-safe tests, major members such as spar caps will be severed and the structure loaded to demonstrate fail-safe capability. After testing, these imposed damages will be repaired and the integrity of the repairs verified in subsequent tests.

The applied loads will match the design shear, moment and tension loadings for the selected conditions. The structure will be supported and the tests loads reacted as in the actual aircraft installation. Loadings will be applied to the wing surfaces through multiple hydraulic actuators pushing on wing loading pads. Other loadings produced by control surfaces, landing gear structure and engine pylon structure will be applied by hydraulic actuators acting on simulated hardware attached to the wing structure as in the actual installation.

The test article includes all of the major design features and the high load introduction and redistribution areas. The demonstration tests will provide all of the necessary data to validate design philosophy, design allowables, analysis methods, fabrication techniques, inspection methods and repair techniques, and,

thereby, provide the confidence needed to proceed with the design and manufacture of production wings.

Fabrication Facilities Requirements

Composite fabrication facilities required for the demonstration article fabrication was premised to be provided by shared utilization of facilities available from other composite work. The production go-ahead on the L-1011 composite fin program is anticipated late in 1981. As a result, automated tape laying equipment, ovens, and refrigeration capable of supporting the wing development program will be available. Lockheed's existing 6.7 m (22.0 ft) diameter, 18.3 m (60.0 ft) length autoclave will accommodate the largest of the components planned in the wing development program.

A composite assembly area will be activated at Factory B-1 to assemble the wing box demonstration article. Table 30 includes the details on this area. An area layout of the planned location in the B-1 factory is shown in Figure 84.

Resources

The development option will require approximately 500 equivalent man-years of engineering, manufacturing and testing effort over a 4-year period from 1983 through 1986. The equivalent man-years include both direct labor cost and the equivalent labor cost of materials.

Table 31 presents an estimated equivalent labor expenditure schedule over the 4-year period for the development option.

The engineering effort premises a continual build-up of personnel from the preliminary design task to the prototype development activity with a peak occurring in 1983. The overall peak manpower needs for this development option occurs in 1984 with the large work force required to manufacture the large demonstration article. A limited ground test of the demonstration article is premised. Expanding the scope of this effort to include spectrum fatigue testing would tend to increase the resource needs for testing by approximately 50-percent and the testing schedule by approximately 10-months.

ORIGINAL PAGE IS
OF POOR QUALITY

TABLE 30. WING BOX DEMONSTRATION ARTICLE OPTION ASSEMBLY AREA REQUIREMENTS

	QTY.	ASSEMBLY SIZE W x L	SIZE INCL. ADJAC. WORK AREA	FLOOR AREA REQUIRED
		m (ft)		m^2 (ft^2)
Major Assembly Area				
Box Assembly Pickup and Installation	1	6.1 x 13.4 (20 x 44)	12.2 x 19.5 (40 x 64)	238 (2560)
Box Assembly Jig	1	1.5 x 13.4 (5 x 44)	7.6 x 19.5 (25 x 64)	149 (1600)
Component Preassembly Fixture	2	0.9 x 13.4 (3 x 44)	4.6 x 18.0 (15 x 59)	164 (1770)
Area Contingency				55 (593)
Total				606 (6523)
Bench Assembly Area				
Work Bench	8	0.9 x 2.4 (3 x 8)	1.8 x 2.7 (6 x 9)	40 (432)
In-Process Package	6	0.9 x 1.8 (3 x 6)	1.5 x 1.8 (5 x 6)	17 (180)
Floor Stock	3	1.2 x 1.8 (4 x 6)	1.5 x 2.5 (5 x 7)	10 (105)
Peripheral Machinery	6	0.9 x 2.4 (3 x 4)	1.5 x 1.5 (5 x 5)	14 (150)
Area Contingency				8 (86)
Total				89 (953)
Incoming In-Process Hold Area	1	0.9 x 9.1 (3 x 30)	1.5 x 10.4 (5 x 34)	15 (170)
Stockroom Area				Not required
Net Area Required				710 (7646)
Unusable (electric Panels, stairwells, etc.)				71 (764)
Plant Aisles				85 (917)
TOTAL GROSS AREA				866 (9327)

Note: The area will contain a central vacuum system in addition to normal factory utility installations, work benches, hand equipment, stock racks, work stands, access platforms, and a labor hour input terminal.

TABLE 31. DEVELOPMENT PROGRAM OPTION COST MATRIX (EQUIVALENT MAN-YEARS)

FUNCTION	1983	1984	1985	1986	TOTAL
Engineering	105	71	23	11	210
Mauufacturing	25	105	60	-	190
Test	-	-	68	32	100
Total	125	176	161	43	500

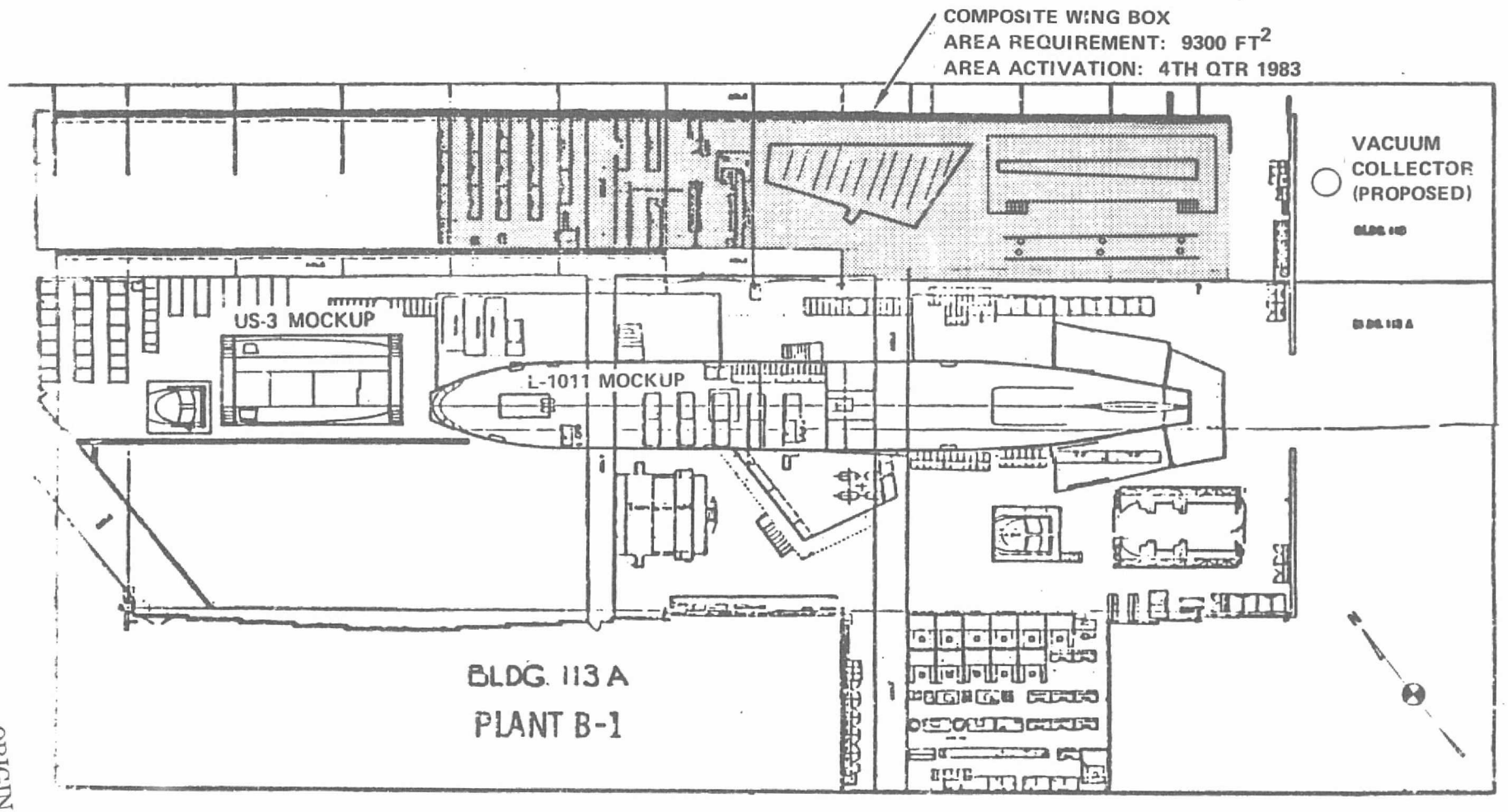

Figure 84. Composite Wing Demonstration Article Option Assembly Area

ORIGINAL PAGE IS
OF POOR QUALITY

REFERENCES

1. Study on Utilization of Advanced Composites in Commercial Aircraft Wing Structures - Executive Summary. NASA CR-145381-1, 1978.

2. Federal Avaiation Regulations Part 25, Airworthiness Standards: Transport Category Airplanes.

3. Jameson, A.; Caughey, D. A.; Newman, P. A.; and Davis, R. M.: A Brief Description of the Jameson-Caughey NUY Transonic Swept-Wing Computer Program-FLO 22. NASA TMX-73996, 1976.

4. Jackson, A. C.: Advanced Composite Structural Methods - Analytical Procedures of Computer Programs. Lockheed-California Company, LR 27334, August 1975.

5. Pearson, J. P.; and Fogg, L. D.: Summary of 1977 Independent Research in Minimum Weight Synthesis of Advanced Composite Structures. Lockheed-California Company, LR 28398, December 1977.

6. Williams, F. W.; and Anderson, M. S.: Users Guide to VIPASA, Department of Civil Engineering, University of Birmingham, January 1973.

7. Anderson, M. S.; Hennessy, K. W.; and Heard, W. L., Jr.: Addendum to Users Guide to VIPASA, NASA TMX-73914, 1976.

8. Cringorten, I. I.: Hailstone Extremes for Design, AFCRL-72-0081, December 1971.

9. Lund, E. S.: Operation of Jet Aircraft from Gravel Runways; Proceedings of the Seventh Annual National Conference on Environmental Effects on Aircraft and Propulsion Systems, Naval Air Propulsion Test Center, pg 9-15, 1967.