General Disclaimer

One or more of the Following Statements may affect this Document

- This document has been reproduced from the best copy furnished by the organizational source. It is being released in the interest of making available as much information as possible.

- This document may contain data, which exceeds the sheet parameters. It was furnished in this condition by the organizational source and is the best copy available.

- This document may contain tone-on-tone or color graphs, charts and/or pictures, which have been reproduced in black and white.

- This document is paginated as submitted by the original source.

- Portions of this document are not fully legible due to the historical nature of some of the material. However, it is the best reproduction available from the original submission.

Produced by the NASA Center for Aerospace Information (CASI)

General Disclaimer

One or more of the Following Statements may affect this Document

- This document has been reproduced from the best copy furnished by the organizational source. It is being released in the interest of making available as much information as possible.

- This document may contain data, which exceeds the sheet parameters. It was furnished in this condition by the organizational source and is the best copy available.

- This document may contain tone-on-tone or color graphs, charts and/or pictures, which have been reproduced in black and white.

- This document is paginated as submitted by the original source.

- Portions of this document are not fully legible due to the historical nature of some of the material. However, it is the best reproduction available from the original submission.

Produced by the NASA Center for Aerospace Information (CASI)

NASA CR-135429
ADL C-81173

ASSESSMENT OF INDUSTRIAL APPLICATIONS FOR ON-SITE FUEL CELL COGENERATION SYSTEMS

by R. P. Stickles, J. K. O'Neill, and E. H. Smith

ARTHUR D. LITTLE, INC.

prepared for

NATIONAL AERONAUTICS AND SPACE ADMINISTRATION

NASA LEWIS RESEARCH CENTER

CONTRACT NAS 3-20818

(NASA-CR-135429) ASSESSMENT OF INDUSTRIAL APPLICATIONS FOR FUEL CELL COGENERATION SYSTEMS (Little (Arthur D.), Inc.) 210 p HC A10/MF A01 CSCL 10A
N78-32544
Unclas
G3/44 30303

OCT 1978
RECEIVED
NASA STI FACILITY

ASSESSMENT OF INDUSTRIAL APPLICATIONS FOR ON-SITE FUEL CELL COGENERATION SYSTEMS

Report No. NAS CR-135429

prepared for

National Aeronautics and Space Administration
Lewis Research Center
Technical Procurement Branch
21000 Brookpark Road
Cleveland, Ohio 44135

Principal Investigators:

R.P. Stickles, J.K. O'Neill
E.H. Smith

September 1978

C-81173

Arthur D Little, Inc.

ACKNOWLEDGEMENTS

Arthur D. Little would like to acknowledge the contributions of independent consultants Royal Cooper and James Balmer on the design and costing of the conventional industrial power plants.

Acknowledgement is also extended to Gary Bollenbacher and Steve Simons for their suggestions and technical direction on behalf of NASA-LeRC.

TABLE OF CONTENTS

		Page
1.0	EXECUTIVE SUMMARY	1-1
1.1	INTRODUCTION	1-1
1.2	INDUSTRIAL PLANT CHARACTERIZATION AND SYSTEM DESIGNS	1-2
1.3	CAPITAL INVESTMENT SUMMARY	1-5
1.4	ECONOMIC ANALYSIS	1-13
1.5	CONCLUSIONS AND RECOMMENDATIONS	1-23
2.0	INTRODUCTION	2-1
2.1	OBJECTIVES	2-1
2.2	SCOPE	2-1
2.3	GROUND RULES	2-2
3.0	INDUSTRY AND PLANT CHARACTERIZATIONS	3-1
3.1	ELECTROLYTIC COPPER REFINING	3-1
3.1.1	Industry Profile	3-1
3.1.2	Process Plant Description	3-1
3.1.3	Electrical Load Profile	3-4
3.1.4	Thermal Load Profile	3-9
3.2	RECYCLE PAPERBOARD	3-10
3.2.1	Industry Profile	3-10
3.2.2	Process Plant Description	3-10
3.2.3	Electrical Demand Profile	3-12
3.2.4	Thermal Load Profile	3-16
3.3	MEATPACKING	3-16
3.3.1	Industry Profile	3-16
3.3.2	Process Plant Description	3-18
3.3.3	Electrical Load Profile	3-20
3.3.4	Thermal Load Profile	3-24

PRECEDING PAGE BLANK NOT FILMED

TABLE OF CONTENTS Continued

	Page
4.0 PLANT UTILITY SYSTEM CONFIGURATION	4-1
4.1 STUDY CASE DESCRIPTION	4-1
4.2 GENERAL DESIGN CONSIDERATION	4-2
4.2.1 Fuel Cell Characteristics	4-2
4.2.2 Selection of Module Sizes	4-6
4.2.3 Designs with Utility Connection (Cases D & E)	4-7
4.2.4 Equipment Sparing Philosophy	4-13
4.2.5 Heat Exchanger Design Approach	4-13
4.2.6 Flue Gas Desulfurization System Design	4-14
4.3 PROCESS PLANT UTILITY SYSTEMS	4-14
4.3.1 Fuel Cell Systems	4-14
4.3.2 Conventional System	4-43
5.0 CAPITAL INVESTMENT FOR INDUSTRIAL UTILITY SYSTEMS	5-1
5.1 GENERAL APPROACH TO COST ESTIMATE	5-1
5.2 HEAT EXCHANGER COSTS	5-1
5.3 FUEL CELL POWER SECTION AND REFORMER COST	5-4
5.4 FLUE GAS DESULFURIZATION SYSTEM COST	5-7
5.5 SYSTEM CAPITAL COSTS	5-7
6.0 OPERATING REQUIREMENTS	6-1
6.1 ENERGY INPUTS	6-1
6.1.1 Basis of Estimate	6-1
6.1.2 Summary of Annual Energy Inputs	6-2
6.2 OTHER OPERATING REQUIREMENTS	6-2
6.2.1 Basis of Estimates	6-2
6.2.2 Summary of Other Operating Requirements	6-5
7.0 ECONOMIC ANALYSIS	7-1
7.1 GENERAL APPROACH	7-1
7.2 ENERGY VALUES AND COST FACTORS	7-3
7.2.1 Projected Energy Values	7-3
7.2.2 Annual Cost Factors	7-3
7.3 RESULTS OF ECONOMIC ANALYSIS	7-6

TABLE OF CONTENTS Concluded

	Page
8.0 CONCLUSIONS & RECOMMENDATIONS	8-1
8.1 CONCLUSIONS	8-1
8.1.1 Copper Refining	8-2
8.1.2 Recycled Paperboard	8-2
8.1.3 Meatpacking	8-3
8.2 RECOMMENDATIONS	8-3
APPENDICES	
REFERENCES	

1.0 EXECUTIVE SUMMARY

1.1 INTRODUCTION

Previous studies (ref. 1 and 2) have addressed the issue of resource conservation afforded by use of on-site fuel cells in process industry applications. The study reported on herein deals with the design configuration, system costs, and economics of on-site fuel cell energy systems applied to selected industrial plants.

The general purpose of this study is to help identify the hardware cost and technology goals that should be pursued to make fuel cell systems cost effective in industrial applications. The specific objectives of the study are to develop conceptual designs and estimate capital and operating costs for fuel cell-based energy systems supplying thermal energy and electric power to each of three industries. These energy systems employ phosphoric acid fuel cells (pressurized and unpressurized) to supply total plant electric power requirements and part of the thermal needs in the form of steam and/or hot water. Auxiliary boilers supply the balance of the steam/hot water demand. The systems are designed to supply the utility needs of a representative electrolytic copper refinery, a recycle paperboard mill, and a meatpacking plant. None of the industries studied produced by-product fuel that could be used by the fuel cells.

For each of the three industrial sites, conceptual designs were also developed for "conventional' utility systems relying on purchased electric power and fossil-fired boilers for steam/hot water. These designs established a baseline for comparing the capital and operating costs of the fuel cell-based energy systems.

In all, five energy systems were evaluated as follows:

Energy System	
A	Pressured fuel cell modules (Type A) with balancing boilers to match plant thermal demand, no connection to utility for standby power.
B	Same as above with atmospheric fuel cell modules (Type B).
C	Conventional system with combustion boilers and purchased power.
D	Pressured fuel cell modules with balancing boilers to match plant thermal demand, utility connection for standby power.
E	Same as above with atmospheric fuel cell modules.

1.2 INDUSTRIAL PLANT CHARACTERIZATION AND SYSTEM DESIGNS

Thermal and electric demands were defined for the industrial processes based on actual plant operating data furnished by industry. The data included records of daily, weekly, and monthly energy usage. These energy demands and other factors are summarized in Table 1-1 for the three industries studied. Refined copper has the highest energy consumptions, however, recycled paper has the highest thermal-to-electric ratio. The meatpacking plant has the lowest energy consumption of the three plants. On summer weekends, the thermal demand at two of the plants drops to nothing as indicated by the range of thermal/electric (T/E) ratios. In terms of T/E ratio, these plants cover a range which is representative of industry in general. Because of geographical location and mode of operation, these plants have different energy system utilizations as indicated by the variations in load factor. The low thermal load factor for the copper refinery is due to climate conditions, whereas the mode of operation is the cause in the meat plant.

Industrial utility plants using fuel cells and conventional boilers were designed to meet the energy demand and utilization as characterized. The quality (steam pressure, water temperature) of thermal energy was also considered in these designs. The important design features of the fuel cell cogeneration systems are presented in Table 1-2. In general, power section net waste heat was used to generate low pressure process steam. Low level heat in vent streams was utilized for heating process water or space heating. With the latter application, water conservation varied since ambient temperature affects the amount of heat extracted and no cooling tower was included in the design. In the summer, when space heating demand is zero, ambient air is used to condense water in the space heating equipment. Hence, 27% of the water above the 49°C dew point is lost in summer.

Energy storage was included in the utility plant for meatpacking and no cooling towers were provided in any of the designs, since the utilization of power section waste heat was nearly complete. Coal-fired (stoker) balancing boiler equipped with air pollution controls (APC) were included except in the small scale system for the meat plant where an oil-fired boiler was specified. A significant portion (approximately 45%) of the electrical output for copper refining was direct current.

A utility plant design was also developed for Case C (conventional baseline) for each industrial application. In these designs, all electricity was purchased from the local electric utility. Other considerations factored into the designs include:

- For Cases A and B, the number of fuel cell modules was set by overall system reliability requirements, based on a statistical determination of system availability given a 95% availability for a single module.

TABLE 1-1

SUMMARY OF INDUSTRY PLANT CHARACTERISTICS

	Refined Copper	Recycle Paperboard	Meatpacking
Plant Characterization			
Location:	Texas	Massachusetts	California
Capacity:	253,988 tonne/yr	249 tonne/yr	550 HPW[a] cows
Mode of Operation:	3 shifts; 7 days/wk	3 shifts; 6 days/wk	2 shifts; 5 days/wk
Energy Characteristics[b]			
Total Energy Purchased, 10^3 GJ/yr	1394	1278	29.1
Purchased Fuels	844	1176	19.5
Purchased Electricity[c], 10^3 GJ/yr	550	102	9.6
Ratio Thermal/Electric			
- Average	1.53	11.57	2.05
- Range[d]	0.87-3.0	0-87.89[e]	0-3.31
Peak Loads[b]			
Thermal, GJ/h	248	163	5
Electric, kW (AC)	21,120	5,200	545
Load Factors[d]			
Thermal, $\frac{\text{Avg GJ/hr}}{\text{Peak GJ/hr}}$	--	1	--
Electric, $\frac{\text{Avg kW}}{\text{Peak kW}}$	0.85	0.81	0.49

[a] head per week.
[b] based on actual plant energy consumption records.
[c] based on 3.6 MJ/kWh.
[d] based on energy load profiles presented in Appendix F.
[e] instantaneous winter weekend condition.

Arthur D Little, Inc

TABLE 1-2

FUEL CELL COGENERATION SYSTEMS
DESIGN FEATURES

	COPPER REFINERY	RECYCLE PAPERBOARD MILL	MEATPACKING PLANT
Use of Fuel Cell Thermal Output			
• Power Section	308-653 kPa Process Steam	308-653 kPa Process Steam	308-653 kPa Process Steam
• Cathode/Reformer Exhaust	Heating Tank House Ventilation Air	Heating Process Water (81°C)	Heating Process Water (89°C)
Water Conservation	Varies with Ambient Temperature Summer/Winter Ratio = 0.73	All water recovered above 49°C dew point	All water recovered above 49°C dew point
Energy Storage	None	None[a/]	Hot Water (89°C)
Cooling Tower	None	None	None
Balancing Boilers	Coal-Fired W/FGD	Coal-Fired W/FGD	Naphtha-Fired
Power Characteristics	AC and DC[b/] Output	AC Output	AC Output

a/ Existing hot water tank at plant.

b/ Need inverter/rectifier power conditioning to get constant current DC.

- For Cases D and E, the number of spare modules based on cost trade-off analysis of fuel cell capital cost versus the present worth of purchased power savings, and

- The design capacity of auxillary fossil-fuel fired boilers was based on the maximum incremental thermal requirement which occurred at peak thermal demand conditions and minimum electric power demand (i.e., minimum waste heat) appropriate to each industry.

These considerations are discussed in Section 4.0. The utility systems configurations for all study cases and for each industrial application are presented in Tables 1-3 to 1-5. The operating hours per fuel cell module per year are summarized below for energy systems A and B:

Industry Application	Operating Hours/ Module/Year
Copper	6655
Paper	6185
Meat	3325

The annual consumption of energy by the process plant utility systems is presented graphically in Figure 1-1. As expected, the fuel cell systems conserve total energy when compared to the conventional system (Case C). The energy savings as a percentage of Case C consumption are the highest for meatpacking at 29 and 19% respectively for pressurized Type A and non-pressurized Type B fuel cells. The lowest percentage savings is achieved in recycled paperboard with 16% (Type A) and 14% (Type B). The 20% savings achieved for copper refining is in good agreement with previous studies (ref. 1). A comparison of the fuel mix for copper and paperboard also reflects the differences in thermal/electric ratio which is higher for paperboard.

1.3 CAPITAL INVESTMENT SUMMARY

The capital investment required for each of the industrial utility systems was estimated by costing the major equipment components and applying appropriate cost factors to account for direct and indirect installation costs. Major component costs were based on prices obtained from equipment suppliers. The purchased price of the fuel cell power section and reformer were provided by NASA in the form of cost curves. Cost summary tables for each design are provided in Section 5.0 and the Appendices.

The investment costs are shown grouped according to major subsystems in Figures 1-2 to 1-4. The remainder-of-plant category includes heat exchangers and common equipment such as water treatment and plant air. The capital investment for the fuel cell system in the copper industry is in the range of $24-28 million, compared to $16 million for Case C. Most

TABLE 1-3

COPPER REFINERY

PLANT UTILITY SYSTEMS
DESIGN SUMMARY

Design Capacity: DC Power (gross) 22,000 kW
Thermal (gross) 248 GJ/hr

Heat Utilization: Steam and Air Heating in Winter (in summer vent stream heat is wasted to atmosphere)

Energy Systems	Fuel Cell Configuration		Boiler Configuration	
	Number Modules I/O[a]	Module Size kW(DC)	Fuel: Coal Number Boilers	Type: Stoker Fired Module Size, 10^3 kg/hr
A	14/10	2200	3	30
B	14/10	2200	3	25
C	0/0	--	3	36
D	11/10	2200	3	30
E	12/10	2200	3	25

[a] installed/operating at peak load.

TABLE 1-4

RECYCLE PAPERBOARD MILL

PLANT UTILITY SYSTEMS
DESIGN SUMMARY

Design Capacity: AC Power 5,200 kW
Thermal (gross) 163 GJ/hr

Heat Utilization: Steam and Hot Water Heating

Energy Systems	Fuel Cell Configuration: Number Modules I/O[a]	Fuel Cell Configuration: Module Size kW(DC)	Boiler Configuration: Fuel: Coal Number Boilers	Boiler Configuration: Type: Stoker Fired Module Size, 10^3 kg/hr
A	10/7	775	3	25
B	10/7	775	3	25
C	0/0	—	3	30
D	8/7	775	3	25
E	9/7	775	3	25

[a] installed/operating at peak load.

Arthur D Little Inc

TABLE 1-5

MEATPACKING PLANT

PLANT UTILITY SYSTEMS
DESIGN SUMMARY

Design Capacity: AC Power 545 kW
Thermal (Gross) 5 GJ/h

Heat Utilization: Steam and Hot Water Heating

Energy Systems	Fuel Cell Configuration: Number Modules I/O[a]	Fuel Cell Configuration: Module Size kW(DC)	Boiler Configuration: Fuel: N/D* Number Boilers	Boiler Configuration: Type: Fire Tube Module Size, 10^3 kg/hr
A	8/5	115	1	1.0
B	8/5	115	1	0.5
C	0/0	--	1	2.5
D	5/5	115	1	1.0
E	5/5	115	1	0.5

*naphtha/distillate.

[a] installed/operating at peak load.

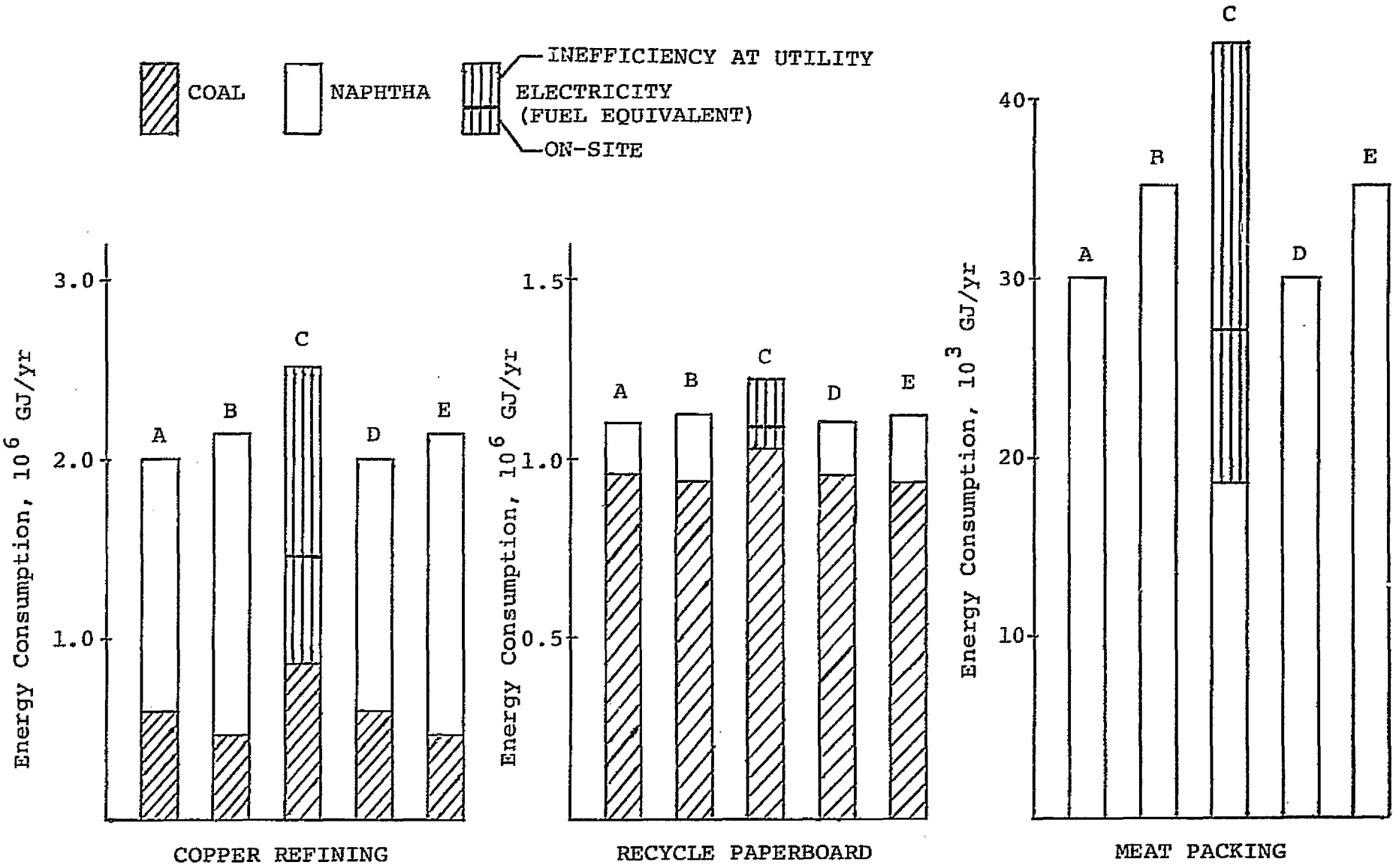

FIGURE 1-1

ANNUAL ENERGY CONSUMPTION
BY PLANT UTILITY SYSTEMS

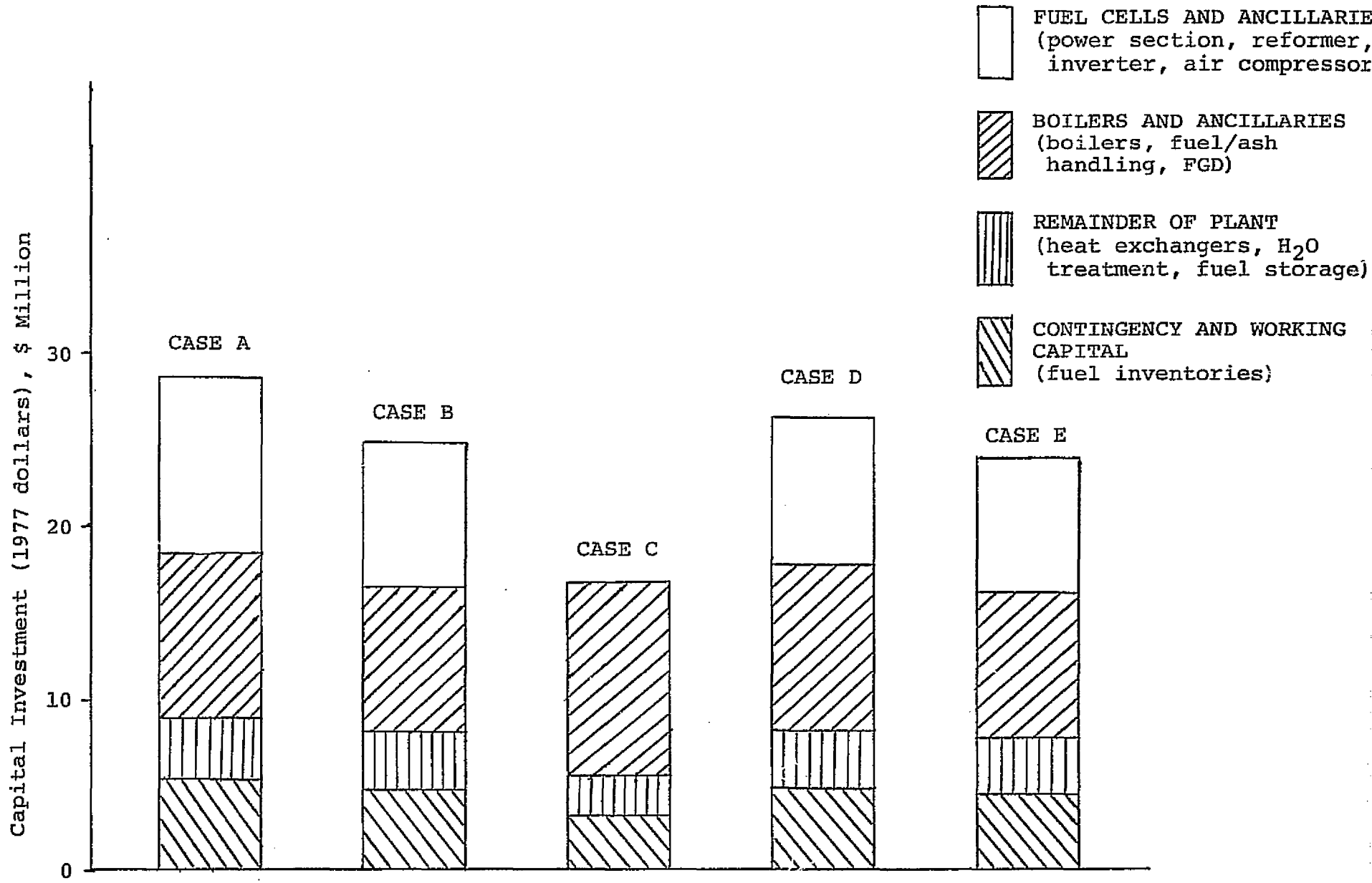

FIGURE 1-2

COPPER REFINERY
PLANT UTILITY SYSTEMS
CAPITAL INVESTMENT SUMMARY

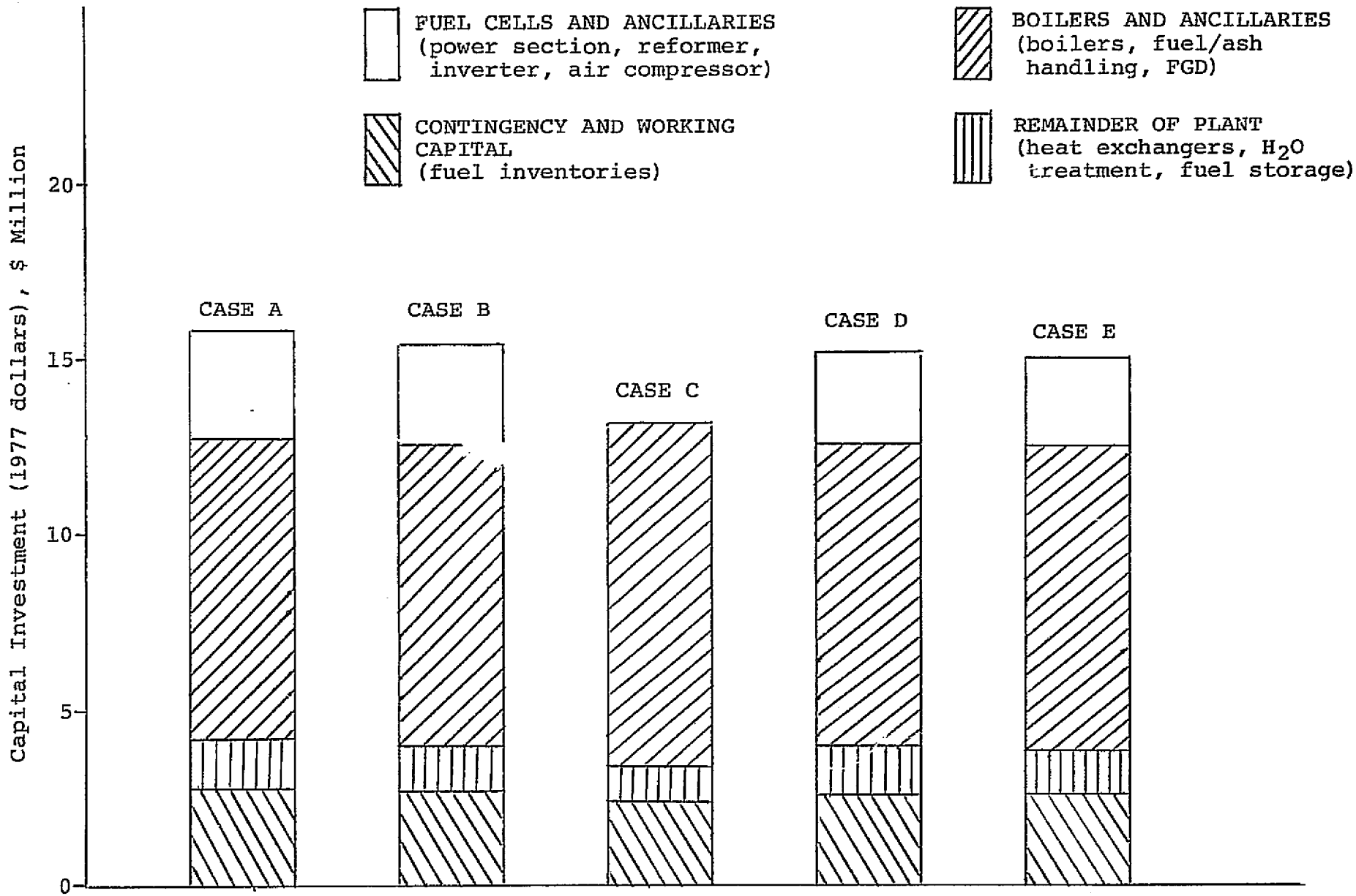

FIGURE 1-3

RECYCLE PAPERBOARD
PLANT UTILITY SYSTEMS
CAPITAL INVESTMENT SUMMARY

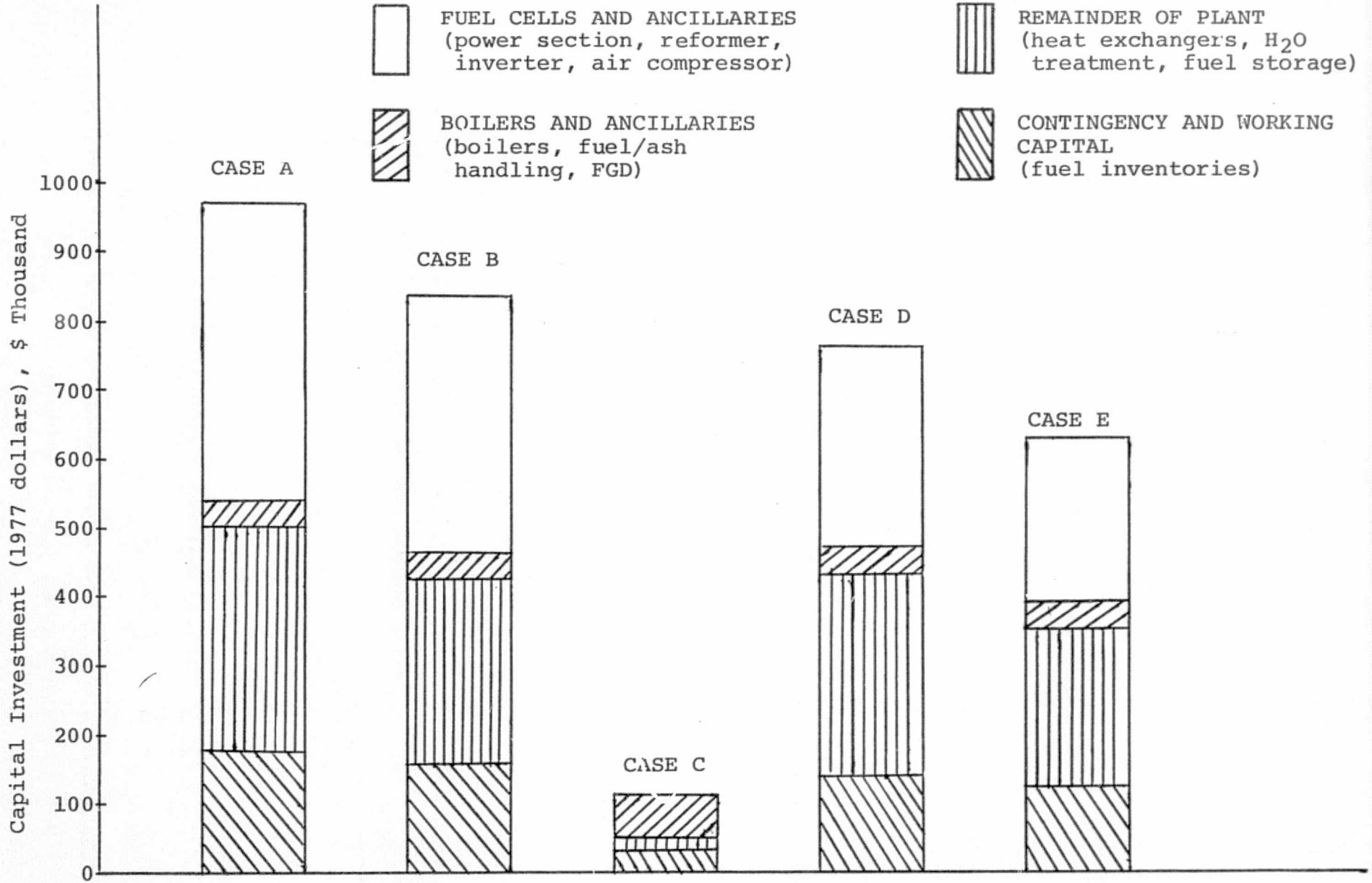

FIGURE 1-4

MEATPACKING PLANT
PLANT UTILITY SYSTEMS
CAPITAL INVESTMENT SUMMARY

of the difference is the cost of fuel cells and ancillaries which account for 37% of the totals. For the paperboard application, where thermal load is less and T/E ratio higher, all the systems are in the range of $13-16 million capital investment. Boiler costs dominate and fuel cells are less than 20% of the total cost.

The meatpacking application (Figure 1-4) results in an extreme variation in capital investment. This is due to a compounding of several factors including a low T/E ratio, a small-scale system, and the use of naphtha oil/fired boilers for the conventional system. Fuel cell capital investments dominate (40%) and peripheral equipment is also a significant portion of the cost.

1.4 ECONOMIC ANALYSIS

The economics of fuel cell cogeneration were evaluated by computing the levelized annual costs for each system. The levelized costs include energy, and operating and maintenance as well as capital charges.

For estimating annual energy costs, a consistent set of energy values was required. The projected energy costs used are presented in Table 1-6. These values represent "best estimates" of future prices for various energy forms in the regions listed. Petroleum-derived fuel prices assume U.S. crude prices reaching parity with international prices either due to decontrol or an equalization tax. The electricity price includes a weighted fuel cost based on a projected mix of different fuels depending on the region.

The annual levelized costs were calculated by applying levelizing factors and a fixed charge rate to convert a series of unequal annual expenses (i.e., increasing with time) to a uniform series of expenses. The levelizing factors and fixed charge rates used were determined using standard economic relationships and the factors summarized in Table 1-7. Energy escalation in real terms was assumed at 2.0% per annum. The analysis was performed in constant (i.e., 0% inflation) dollars. Accelerated depreciation and a tax credit were also factored into the fixed charge rate.

The levelized annual costs resulting from this analysis are presented in Table 1-8. By inspection, it is seen that energy costs dominate, comprising 50 to 65% of the total levelized cost. Naphtha is the larger fuel cost for the fuel cell cases. Capital charges are the next largest cost element, comprising about 25% of the total.

The only industrial application with levelized costs for fuel cell energy systems that are competitive with the conventional system is for the recycle paperboard mill. This application is characterized by a high T/E ratio, which results in a lower incremental investment for the fuel cell system relative to the conventional system. Relatively high thermal and electric load factors also contribute to high utilization of capital. In addition, the purchased price of electricity for this plant location is the highest of all the industrial applications.

TABLE 1-6

SUMMARY OF PROJECTED ENERGY VALUES ("BEST ESTIMATE")

(with crude oil equilization tax - $/GJ)

(1977 Constant Dollars)

INDUSTRY:	RECYCLE PAPER	COPPER REFINING	MEATPACKING
REGION:	New England	West South Central	West Coast (Calif.)
YEAR:	1985	1985	1985
Energy Form			
Virgin Naphtha*	5.10	4.89	4.77
No. 2 Distillate*	4.87	4.67	4.59
Coal†	1.46	1.47	1.46
Electricity,§ ¢/kWh	5.11	4.14	3.60

*EPRI RP 1042 Report decontrol scenario values inflated to 1977 dollars (1.145 multiplier).

†Industrial steam coal based on EPRI RP 759-2 electric utility burner tip prices with 15% mark-up and inflated to 1977 dollars.

§Arthur D. Little, Inc. estimate.

TABLE 1-7

SUMMARY OF ASSUMPTIONS USED IN COST ANALYSIS

GENERAL FACTORS

Annual Inflation, i	-	0%
Annual Energy Escalation, e_E	-	2.0%
Non-Energy Cost Escalation, e_{NE}	-	0%
Project Life	-	20 years
Method of Depreciation	-	SYD
Tax Credit	-	10%
Tax Rate	-	48%

INDUSTRY SPECIFIC FACTORS

	Copper Refining	Recycle Paper	Meatpacking
Debt/Equity, %	30/70	50/50	50/50
Tax Life, yr	14	16	18
Cost of Debt, %	3	3	3
Cost of Equity, %	9	9	9
Weighted Cost of Capital (r), %	7.2	6.0	6.0

TABLE 1-8

LEVELIZED ANNUAL COST
INDUSTRIAL ENERGY SYSTEMS

COPPER INDUSTRY

	Case A	Case B	Case C	Case D	Case E
		($000 constant 1977 dollars)			
Capital Charge	3455.9	3105.5	2003.0	3169.9	2940.6
Naphtha	8520.2	10410.9	--	8486.1	10408.9
Coal	1105.6	848.3	1573.3	111.0	848.6
Electricity	--	--	7734.2	324.3	234.1
Non-Energy Charge	1728.9	1612.4	822.0	1796.3	1641.7
TOTAL ANNUAL COST	14810.6	15977.2	12132.5	14887.6	16073.9

RECYCLE PAPERBOARD

	Case A	Case B	Case C	Case D	Case E
		($000 constant 1977 dollars)			
Capital Charge	1710.5	1652.7	1418.2	1640.8	1623.0
Naphtha	1780.7	2199.1	--	1779.1	2198.8
Coal	1575.8	1504.8	1874.8	1575.6	1504.8
Electricity	--	--	1902.0	38.9	41.3
Non-Energy Charge	968.7	944.5	787.8	979.9	976.9
TOTAL ANNUAL COST	6035.7	6301.1	5982.7	5975.4	6344.8

MEATPACKING

	Case A	Case B	Case C	Case D	Case E
		($000 constant 1977 dollars)			
Capital Charge	105.9	91.7	12.2	82.9	68.6
Naphtha/Fuel Oil	184.8	206.4	105.7	184.8	206.4
Electricity	--	--	101.0	11.1	11.1
Non-Energy Charge	95.6	93.8	71.2	97.1	95.3
TOTAL ANNUAL COST	386.3	391.9	290.1	375.9	381.4

The meatpacking application exhibits the largest (percentage-wise) cost disparity between the fuel cell and conventional systems. These energy system designs are of relatively small capacity (diseconomies of scale) and non-energy related costs are also significant. In addition, the purchase price of electricity is the lowest of any location studied.

The sensitivity of these results to energy price assumptions and capital investment estimates is shown in Figures 1-5 to 1-9. These curves show the breakeven electricity price as a function of naphtha price for fuel cell cogeneration systems compared with conventional non-cogeneration systems. A family of curves is shown for different capital investment adjustment factors, expressed as a percentage of total system investment. The "best estimate" electricity and naphtha intersection is also located on the plots. The solid lines are based on the best estimate coal price except as noted. Breakeven plots for both Cases A and B compared to Case C are provided. Cases D and E are not shown since the plots would be almost identical.

Several interesting observations are apparent from inspection of these figures. The breakeven electricity price is more sensitive to naphtha values for the Type B cell, due to its lower electrical efficiency. In general, the economics are more sensitive to energy prices than capital investment cost, excepting coal price, which has a small effect.

Capital investment sensitivity increases for small systems (meatpacking), as measured by the distance between lines of different investment.

Only for the paperboard mill does the intersection of best estimate energy values coincide with the breakeven values. This is primarily due to the high cost of electricity in the northeast.

In general, the price of purchased electricity is the key factor affecting the outcome of this study. New electricity generating systems owned by private industry should deliver power at a transfer price (after thermal credits) competitive with the utility grid in order to be attractive. A new industrial generating plant may be at an economic disadvantage due to the fact that local utility power rates reflect:

1. A mix of fuels including hydro, fossil (coal, oil, gas) and nuclear.

2. A lower expected return-on-investment criterion.

3. Partially written-off investments made when construction costs in constant dollars were lower.

Consequently, the higher energy conversion efficiency afforded by the fuel cell is not sufficient, in most cases, to offset these institutionalized economic disadvantages. This is exacerbated by the fact that the fuel cell requires a relatively high valued fuel.

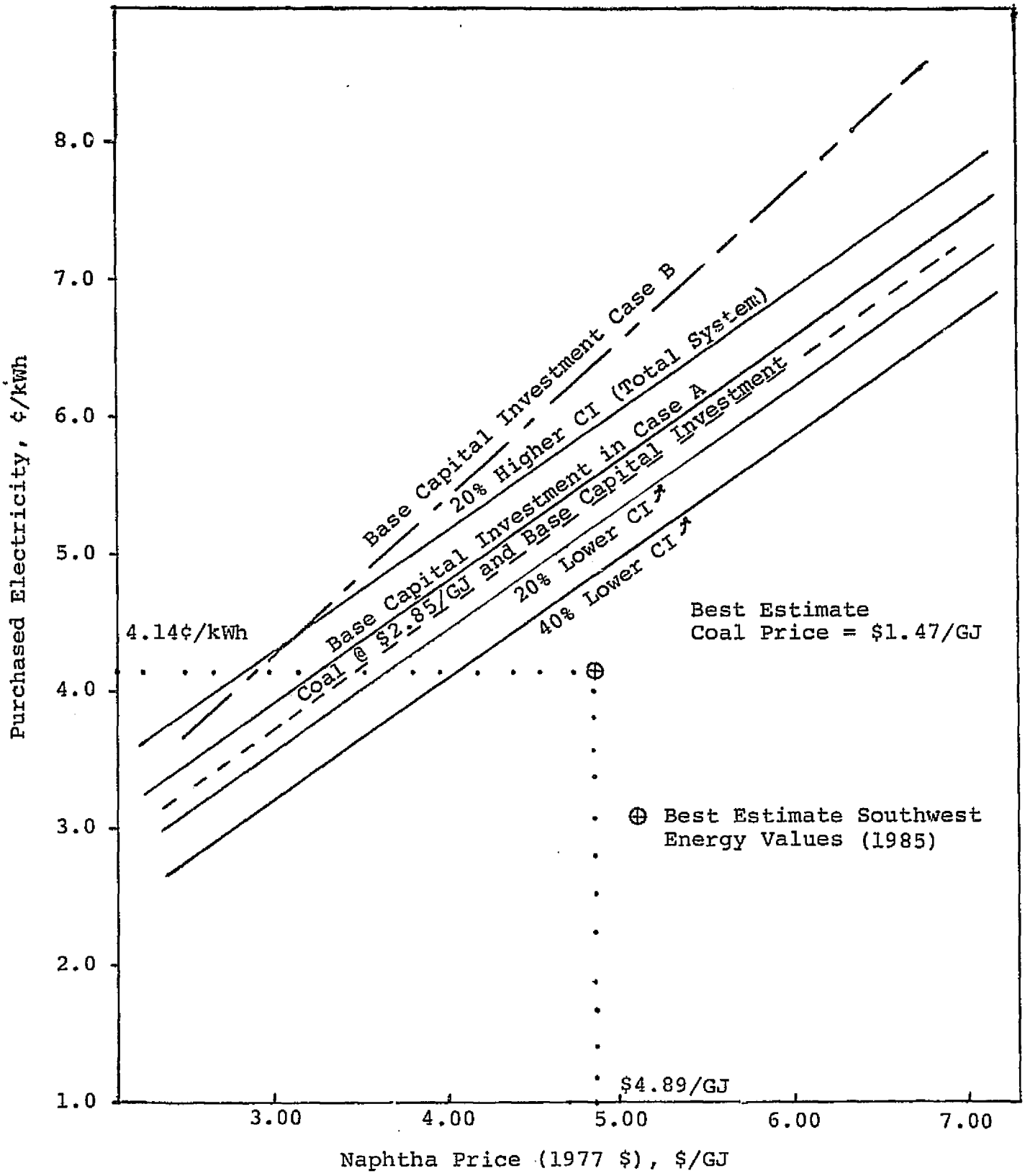

FIGURE 1-5

COPPER REFINERY UTILITY SYSTEM
FUEL AND ELECTRICITY PRICE SENSITIVITY FOR
CASE A FUEL CELL SYSTEM TO BREAK-EVEN
WITH CONVENTIONAL UTILITY SYSTEM (CASE C)

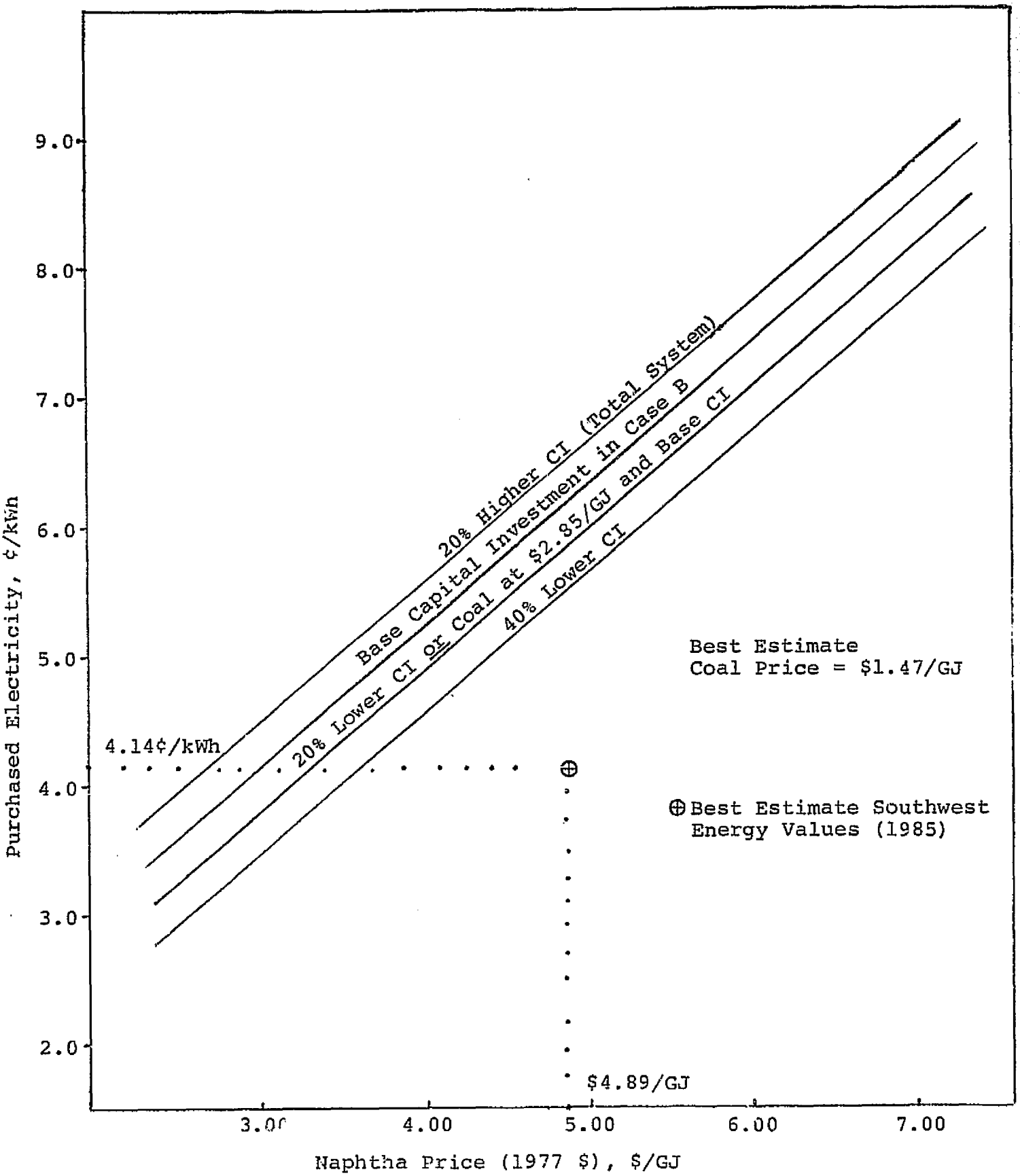

FIGURE 1-6

COPPER REFINERY UTILITY SYSTEM
FUEL AND ELECTRICITY PRICE SENSITIVITY FOR
CASE B FUEL CELL SYSTEM TO BREAK-EVEN
WITH CONVENTIONAL UTILITY SYSTEM (CASE C)

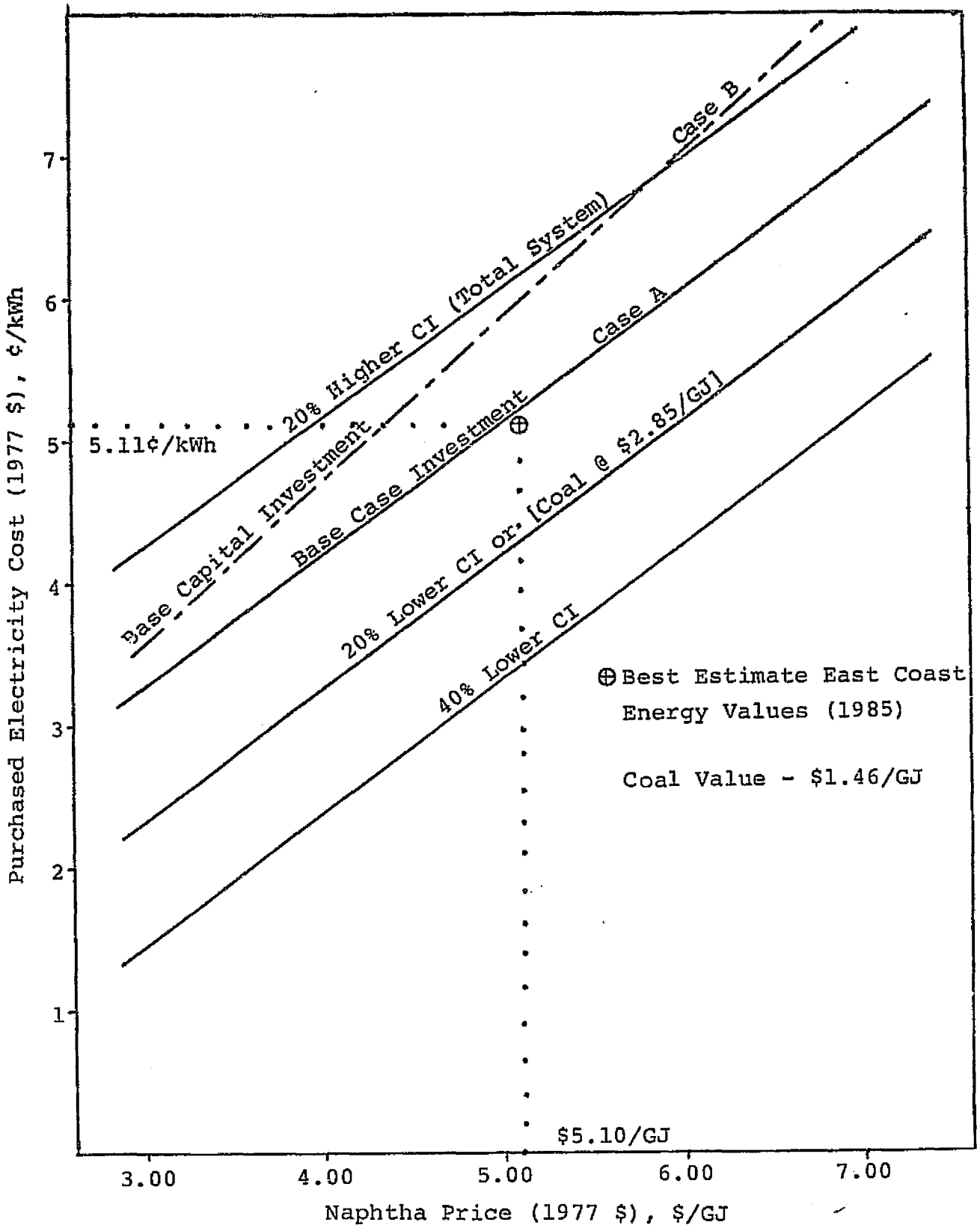

FIGURE 1-7

RECYCLE PAPERBOARD MILL UTILITY SYSTEM
FUEL AND ELECTRICITY PRICE SENSITIVITY FOR
CASE A FUEL CELL SYSTEM TO BREAK-EVEN
WITH CONVENTIONAL UTILITY SYSTEM (CASE C)

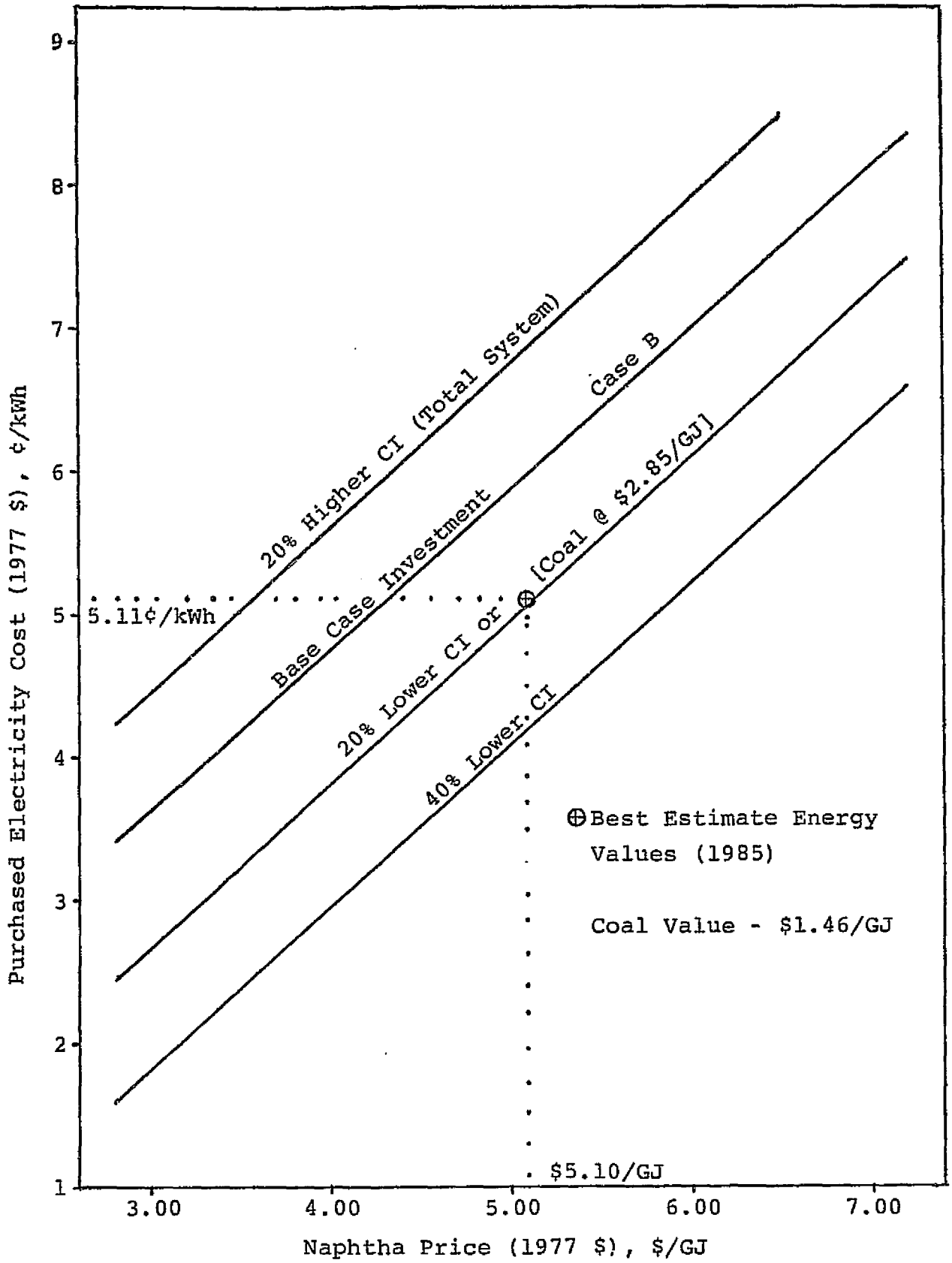

FIGURE 1-8

RECYCLE PAPERBOARD MILL UTILITY SYSTEM
FUEL AND ELECTRICITY PRICE SENSITIVITY FOR
CASE B FUEL CELL SYSTEM TO BREAK-EVEN
WITH CONVENTIONAL UTILITY SYSTEM (CASE C)

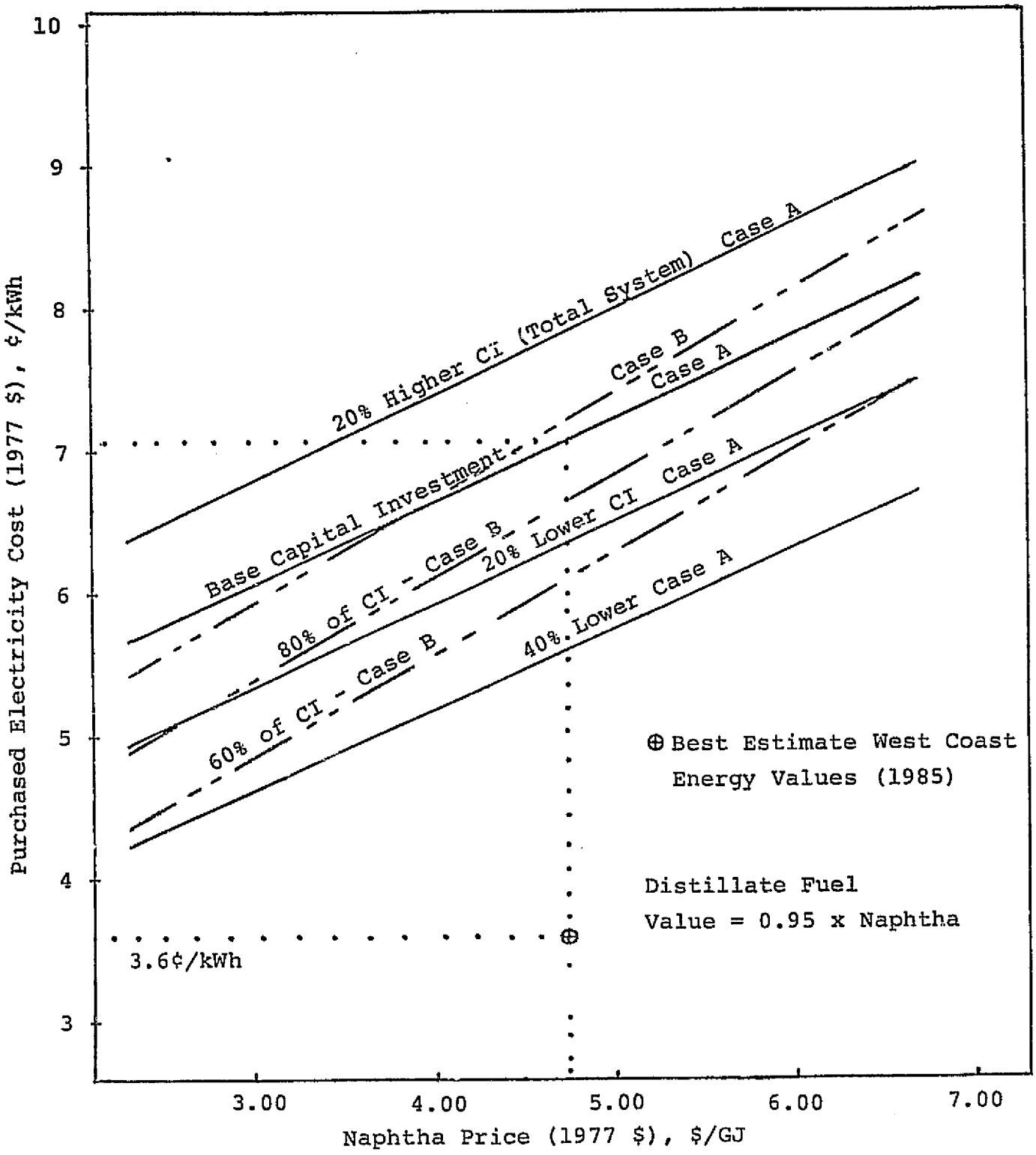

FIGURE 1-9

MEAT PACKING PLANT UTILITY SYSTEM
FUEL AND ELECTRICITY PRICE SENSITIVITY FOR
CASE A AND CASE B FUEL CELL SYSTEMS TO BREAK-EVEN
WITH CONVENTIONAL UTILITY SYSTEM (CASE C)

In this study, electricity is valued at the average cost-of-service rate which is the present procedure. So, in effect, the fuel cell systems are being compared against the established utility rate structure, and consequently they are only economically competitive in regions with high electricity rates. In reality, the situation is even worse due to present graduated rate structures which favor large users. Therefore, the implementation of on-site industrial cogeneration will likely require significant tax credits or tax holidays in order to skew the economics in their favor. Another option is to have the utilities own and operate the cogeneration systems which tends to spread the high cost of marginal electricity over a large service base.

1.5 CONCLUSIONS AND RECOMMENDATIONS

The major conclusions and recommendations resulting from this study are presented below.

Conclusions

1. Energy costs dominate the economics of fuel cell cogeneration.

2. The economics are most sensitive to the relative values of naphtha and purchased electricity; less sensitive to capital investment and coal price.

3. Fuel cell industrial power plants are competitive with conventional non-cogeneration systems when purchased electricity cost and electric load factor are high.

4. Fuel cell cogeneration economics look better from the utility industry's perspective, where incremental electricity is priced at current cost.

5. Industrial fuel cell cogeneration economics are not very attractive with purchased electricity prices based on averaged fuel costs and graduated rate structures which favor large users.

6. The fuel cell system capital investment can be reduced by relying on a utility connection for unexpected outage requirements without increasing annual costs.

7. The pressurized fuel cell with its higher electrical efficiency has lower annual costs and also offers potential cost advantages in the design of peripheral equipment.

Recommendations

1. Priority should be given to the development of the Type A fuel cell because it is more efficient and affords potential cost benefits for peripheral equipment components.

2. Standardized designs for certain fuel cell system components should should be considered to reduce system capital cost through assembly-line production. In particular, the turbocompressor, inverters, and power section coolant system heat exchangers are likely candidates, since their design is dictated mostly by the characteristics of the fuel cell and not process interface conditions.

3. The turbocompressor required in our design was relatively expensive since a high efficiency was required to balance energy recovery with air compression requirements. One can trade overall efficiency for lower capital cost by injecting and combusting additional fuel in the vent stream before expansion through the turbine. This trade-off should be evaluated.

4. The use of direct contact heat exchange should be assessed for recovery of low grade waste heat in cogeneration applications. This is particularly recommended for low pressure fuel cell operation.

5. The economics of fuel cell cogeneration should be assessed for a system sized to meet the maximum process thermal load with sales of excess power. This could reduce the investment required in balancing steam boilers and might reduce the cost relative to the conventional system, if the excess power can be sold at attractive rates.

6. Since naphtha price is a key factor in the overall cost of fuel cell cogeneration, the sensitivity of naphtha price to various levels of demand should be assessed. This assessment should consider projected naphtha demand based on current uses and incremental demands beyond this level due to fuel cell penetration and SNG production.

7. The economic analysis of fuel cell industrial applications should be evaluated in the context of utility ownership.

2.0 INTRODUCTION

Electricity, steam and/or hot water are the predominant energy forms for industrial end-use. Most industries purchase electricity from central station utilities and generate steam and/or hot water in on-site fossil-fired boilers. On-site power plants with heat recovery commonly referred to as total energy systems (TES), can produce both electricity and usable heat at high overall fuel energy utilization. Industrial processes that can effectively utilize the combination of power and heat produced by on-site power plants could benefit from the reduced costs for energy, if capital and operating costs of the added equipment are sufficiently low. In addition, energy resources would be conserved.

On-site industrial power plants with heat recovery currently utilize engine/generator units powered by diesels or gas turbines, or boiler/steam turbine units. First generation, phosphoric acid fuel cells possess high generating efficiencies and operate at temperatures high enough to produce usable waste heat. Consequently, a fuel cell power plant is a potential alternative to current systems.

2.1 OBJECTIVES

The objective of this study is to determine costs and to evaluate the cost-effectiveness of phosphoric acid fuel cells for on-site, total energy, industrial applications and compare them to conventional methods for supplying the same energy requirments. The information provided by the contract will help identify the cost and technology goals that should be pursued to make the fuel cell TES concept effective.

2.2 SCOPE

The specific scope items of this study are summarized in the following task descriptions.

Task 1 - Data Base

This task dealt with characterization of the industrial applications in terms of process integration, thermal and electric peak and normal demands, energy load profiles (hourly, monthly, annual) and investment criteria. The information for each industrial application was based on actual plant operating records obtained from contacts in private industry.

Task 2 - Energy System Design

This task involved the conceptual design of four fuel cell-based total energy systems (TES) for supplying electricity and low level thermal energy to each of three industrial processes. These TES employed phosphoric

acid fuel cells (pressurized and unpressurized) to supply total plant electric power and part of the thermal needs. Auxiliary fossil-fired boilers supplied the balance of the thermal requirement. For each industry and fuel cell type, the TES was designed with and without an electric utility connection for furnishing standby power. A system reliability and hardware cost trade-off analysis was performed to select near-optimum module sizes.

For each industrial application, conceptual designs were also developed for "conventional" power plants incorporating fossil-fired boilers for thermal energy requirments and relying on purchased power for electricity needs. These systems were designed to match the same load profiles as the fuel cell TES.

Task 3 - Cost Estimates

Each of the fifteen (15) energy systems was characterized in terms of capital investment and operating costs. The investment estimates were based on budget type prices obtained from suppliers of major equipment components and accepted installation cost factors. Operating costs were determined from utility and labor requirements and appropriate unit cost factors. A fuel cell system performance simulation model was constructed to compute the integrated annual energy consumption.

Task 4 - Economic Analysis

Using general and industry specific economic factors, the levelized annual cost (LAC) associated with each energy system was determined. A comparison of LAC for the fuel cell TES and conventional system was made. Breakeven costs, as a function of naphtha and purchased electricity prices, were defined. The sensitivity of the breakeven point to changes in capital investment was analyzed.

2.3 GROUND RULES

The principal ground rules established for the assessment include the following:

- The industrial power plants were evaluated in the context of new production facilities: retrofit applications were not considered.
- Coal was the first priority fuel for steam generation associated with conventional and fuel cell energy systems. Liquid fuels were permissible if large diseconomies-of-scale and impractical flue gas cleaning systems would result from use of coal fired boilers.

- Fuel cell TES electrical output sized to match on-site demand for electricity; selling of power to the electric utility grid was not considered.

- The on-site energy systems were owned and operated by private industry.

- Fuel cell performance and cost information was supplied by NASA LeRC and is summarized in Appendix G.

PRECEDING PAGE BLANK NOT FILMED

3.0 INDUSTRY AND PLANT CHARACTERIZATIONS

3.1 ELECTROLYTIC COPPER REFINING

3.1.1 Industry Profile

Most industrial applications of copper require higher purities than achieved in the blister copper produced by the smelting of copper concentrates (primary copper), or in most fire refined secondary copper (recovered from scrap). Electrolytic refining is used to improve purity to 99.95% Cu, and recover precious metals and other byproducts contained in blister copper. In 1977, fourteen plants performed such refining in the United States, producing about 0.91 million tonne of high purity copper using more than 600 x 10^6 kWh of electricity (ref. 3). Total energy consumption in the form of fossil fuels purchased directly by the refineries and by their servicing utilities for the generation of that electricity was on the order of 15.3 x 10^6 GJ (ref. 4).

Eighty percent of domestically refined copper output derives from processing of blister copper produced by primary copper smelters. Nine refineries with combined capacities of 1.8 x 10^6 tonne/yr are identified with this primary copper production. Like the mines and smelters, most of these refineries are located in the western United States. About half of them are located in the southwestern states of Texas and Arizona. Five electrolytic refineries with a combined capacity of 0.41 x 10^6 tonne/yr are classified as secondary copper refiners; most of these are located east of the Mississippi. The median size of all domestic copper refineries is about 181,420 tonne/yr, with individual capacities ranging between 36,284 and 380,982 tonne/yr.

The primary copper companies associated with electrolytic copper refining are: AMAX, Anaconda, Asarco, Kennecott, Phelps Dodge, Magma (subsidiary of Newmont), and Inspiration. Typically, these companies operate at a debt/equity ratio of about 30/70. Pretax return on shareholders' equity in these companies averaged 16.8% for the ten year period 1965-74.

3.1.2 Process Plant Description

Electrolytic copper refining consists of electrochemically dissolving copper from impure anodes and selectively plating the dissolved copper in pure form on copper cathodes. The electrolyte is an acidified solution of copper sulfate. Impurities such as arsenic, antimony, and nickel are also dissolved at the anode and held in solution. Precious metal impurities are not soluble and fall to the bottom of the tanks as anode sludge or slime which is removed periodically. The temperature, composition, and circulation of the solution in the electrolyte tanks are controlled within narrow limits to obtain a good deposit on the cathodes.

For this study we obtained data from a new, primary copper refinery located in the southwestern United States. Present capacity of this facility is 253,988 tonne/yr of cathode copper. Impurities removed from the copper are processed on-site and most of the refined copper is cast in the form of wire rod, ingots, or other semi-finished forms before leaving the plant.

The flow of materials and energy in the refining process is illustrated schematically in Figure 3-1. The steam and electrical loads are typical of a high production level occurring on a very cold day. Blister copper (99.0-99.6% Cu) is received from the smelter in the form of cast anode sheets weighing about 700 pounds each. These anode sheets are suspended in plastic-lined electrolytic cell tanks constructed of reinforced concrete.

In the starting sheet preparation section, copper dissolved from the anodes is deposited as thin sheets of high purity copper on special cathode blanks. Each day the fresh copper deposits are peeled from the blanks, trimmed, attached with loops, and stacked before being sent to the commercial electrolytic section of the tankhouse for use as cathodes.

In the commercial sections, the copper dissolved from the anodes is deposited on the copper starting sheets just mentioned. Commonly, the cathodes remain in the electrolyte tanks for about two weeks, in which time they gain approximately 136 kg. When removed from the tanks, the cathodes are washed in hot water to remove the highly acidic electrolyte solution and moved to an adjacent building for melting and casting. The anodes are commonly changed about once every 28 days. Undissolved anode scrap, amounting to about 15% of the original anode weight, is melted and recast in another building to form new anodes.

Under normal operating conditions, the concentrations of copper and impurities build up in the electrolyte solution and must be removed from the circuit. The excess copper is removed by passing a portion of the solution through other electrolytic cells which have insoluble lead anodes and conventional copper cathodes. The excess copper is deposited on the cathodes as a deposit of high initial quality. The impurities are removed by using another bank of these "liberator" cells which remove all of the copper from the solution. After all the copper has been removed from the solution, the remainder is concentrated by evaporation and impure crystals of nickel sulfate are obtained. The remaining acid is discarded.

The electrolytic tanks themselves are also cleaned about every 28 days. Precious metal slimes which have settled on the bottom are hosed out of the cell with high pressure water and acidified. Copper contained in these slimes is dissolved in aerated, agitated tanks, and the decopperized slimes remaining are processed on-site for recovery of valuable impurities--chiefly silver, gold, selenium, and tellurium. The silver and gold are purified electrolytically and leave the plant as ingots.

The commercial electrolytic section of the plant is operated continuously, 7 days per week, 24 hours per day. Ancillary activities--such as

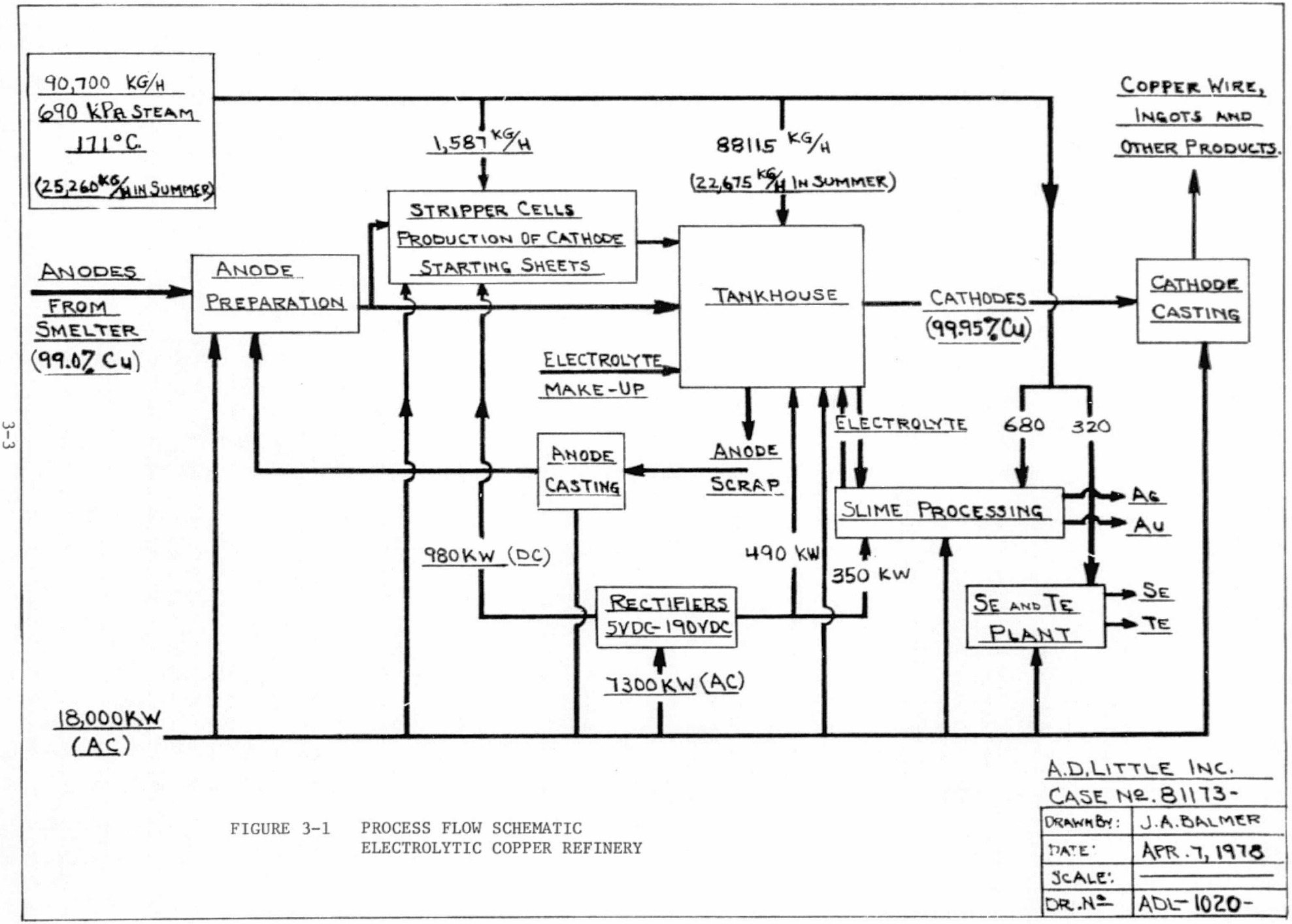

A.D.LITTLE INC.
CASE No. 81173-

DRAWN BY:	J.A.BALMER
DATE:	APR. 7, 1978
SCALE:	—
DR. No.	ADL-1020-

FIGURE 3-1 PROCESS FLOW SCHEMATIC
ELECTROLYTIC COPPER REFINERY

starting sheet preparation, cathode casting, and slimes processing--are shut down on the weekend but operate 1-2 shifts per day during the rest of the week.

3.1.3 Electrical Load Profile

Each year, the electrolytic copper refinery just described consumes approximately 140 x 10^6 kWh of electricity which it purchases from an electric utility company. The utility company supplies an average demand of 16,000 kW via a transmission line entering the plant at 115 kV. The plant power factor now ranges from 0.69 to 0.86; normally, it is near the higher value. Peak observed electrical demand is 20,000 kW. Voltage is stepped down on-site to 13.8 kV for distribution within the plant to major load centers.

The single largest load within the plant is the average 4,900 kW DC demand of the commercial electrolytic sections. Solid state rectifiers deliver controlled DC voltage levels there, at the starter sheet preparation cells (about 980 kW DC), and at the silver and gold refining units (about 350 kW DC). Rectifier efficiencies are currently in the 87-95% range, depending on output requirements. Altogether, the rectifiers draw about 40% of the AC power coming into the plant. The two major AC loads are the numerous large ventilating fans located in the main tankhouse, and the powerful blowers and other motors of the cathode melting and casting operations.

Within the commercial and starter electrolytic sections, groups of cells composed of many parallel anode/cathode pairs are connected electrically in series to form production modules. The current drawn by any module is held constant within fairly narrow limits at about 17,000 amperes. However, the voltage drop across any particular module will depend on how many cells are in it at any given time. Cells are frequently taken out in groups for replacement. By short-circuiting cell groups, 5 V step changes are imposed on the module voltage. Voltage drop also varies slowly due to changes in the operating conditions within cells. Thus, the rectifiers are designed to provide 5 V to 100 V across starting sheet modules and 20 V to 160 V across commercial section modules.

The variations of utility loads with time, as reported in the recent operating records of the copper refinery, are summarized in Figures 3-2 through 3-5. As shown in Figure 3-2, there is no apparent seasonal effect on the electrical demand of the electrolytic copper refinery. Total power purchased from the utility is regularly in the range of 11.7 to 13.7 million kilowatt-hours per month. Variations are due primarily to changes in monthly production. Figures 3-3 and 3-4 show variations in daily consumption of electricity; note that electricity consumption drops about 20% over the weekend when many ancillary facilities are shut down. Within a given 24-hours the electrical load variation is very small as shown in Figure 3-5.

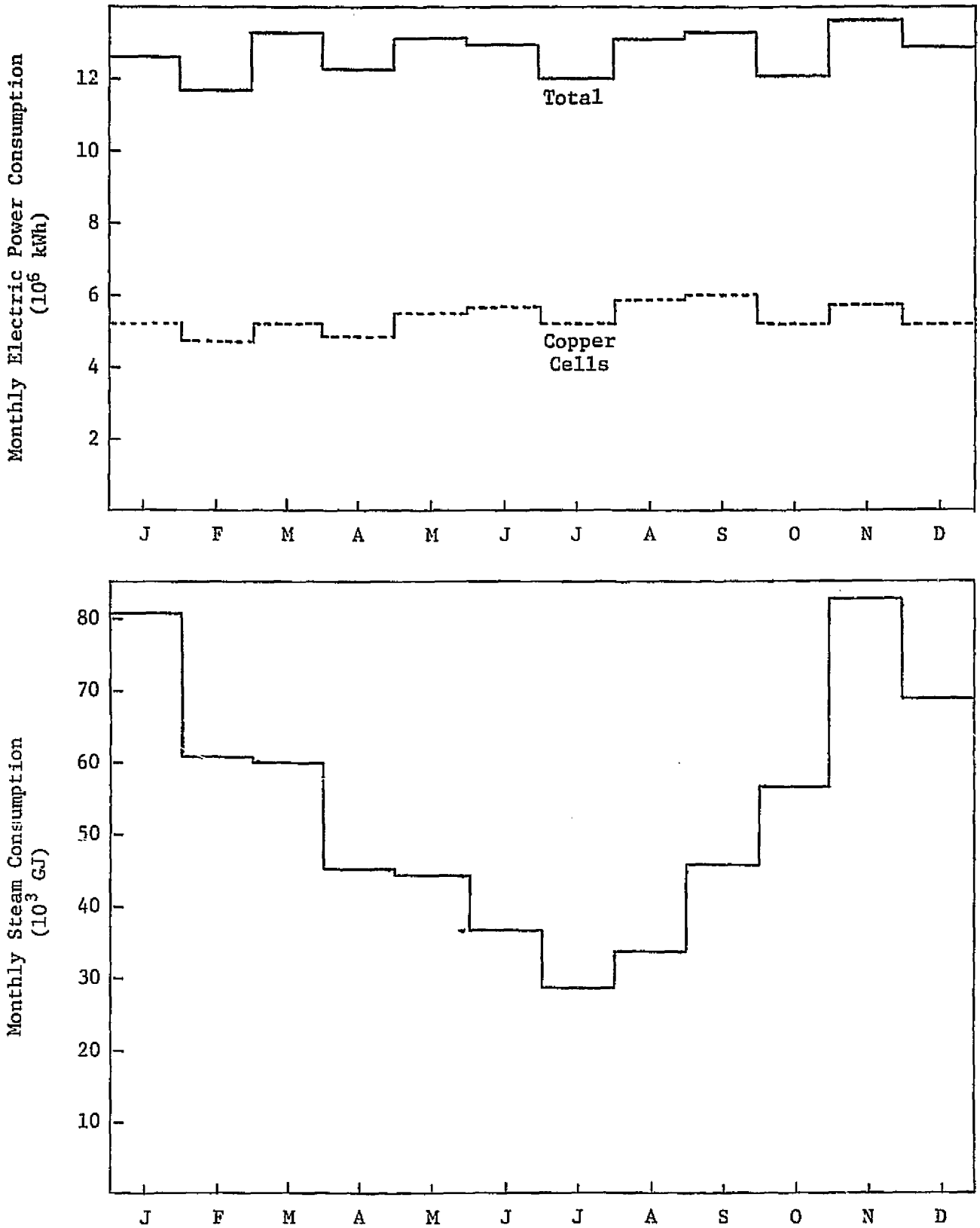

FIGURE 3-2

ELECTROLYTIC COPPER REFINERY VARIATIONS
IN MONTHLY CONSUMPTION OF STEAM AND ELECTRICITY

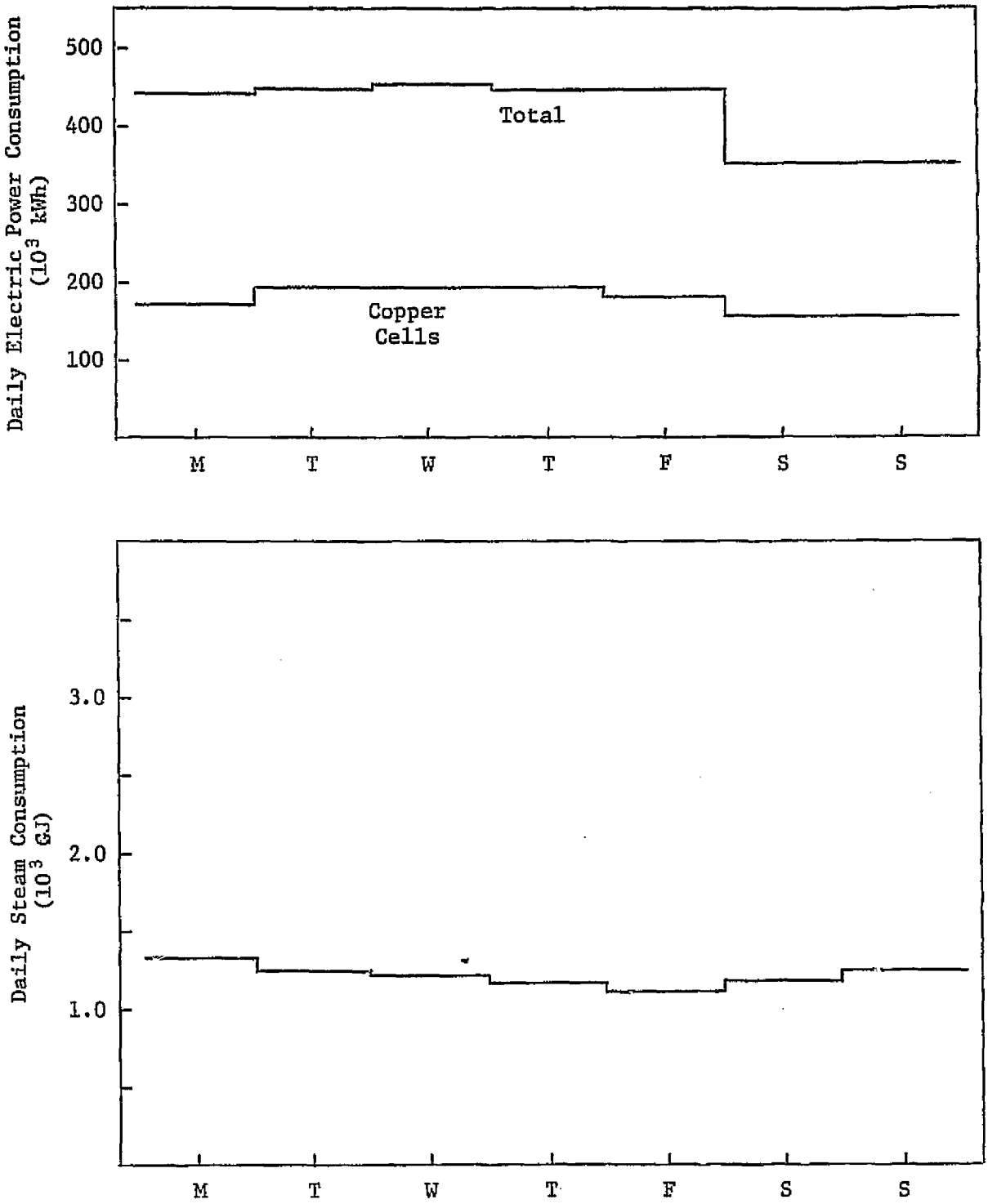

FIGURE 3-3

ELECTROLYTIC COPPER REFINERY VARIATIONS IN DAILY CONSUMPTION OF STEAM AND ELECTRICITY (SUMMER)

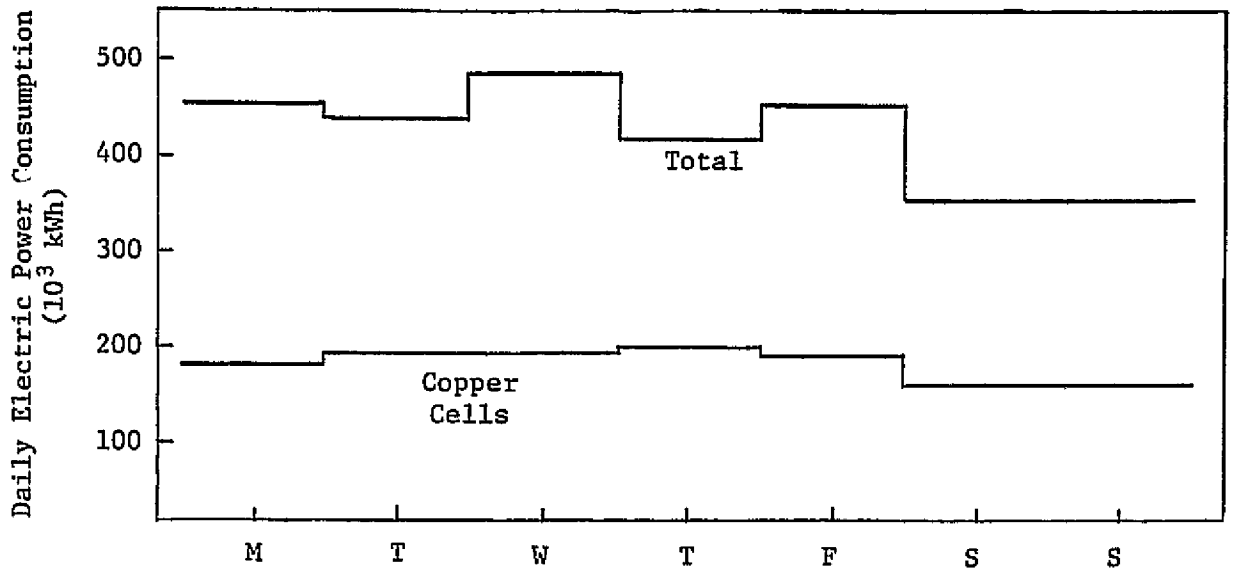

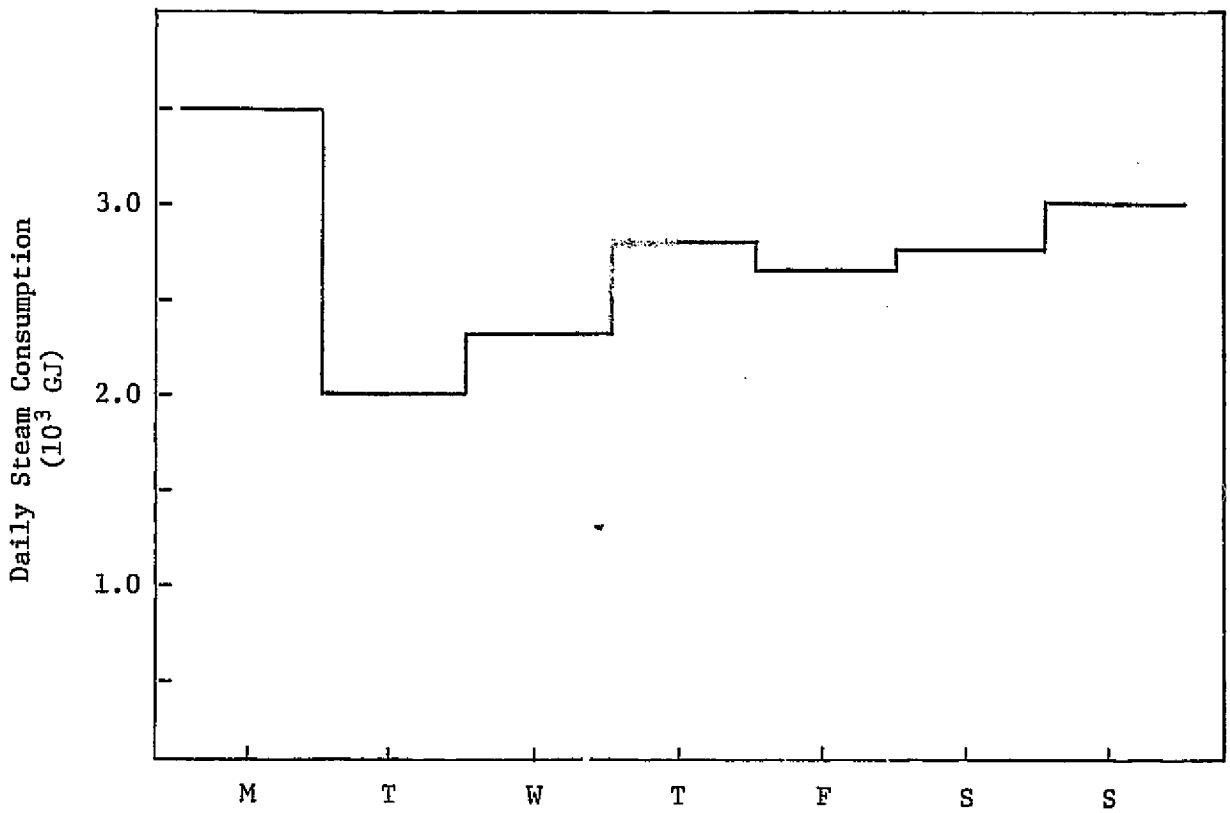

FIGURE 3-4

ELECTROLYTIC COPPER REFINERY VARIATIONS
IN DAILY CONSUMPTION OF STEAM AND ELECTRICITY
(WINTER)

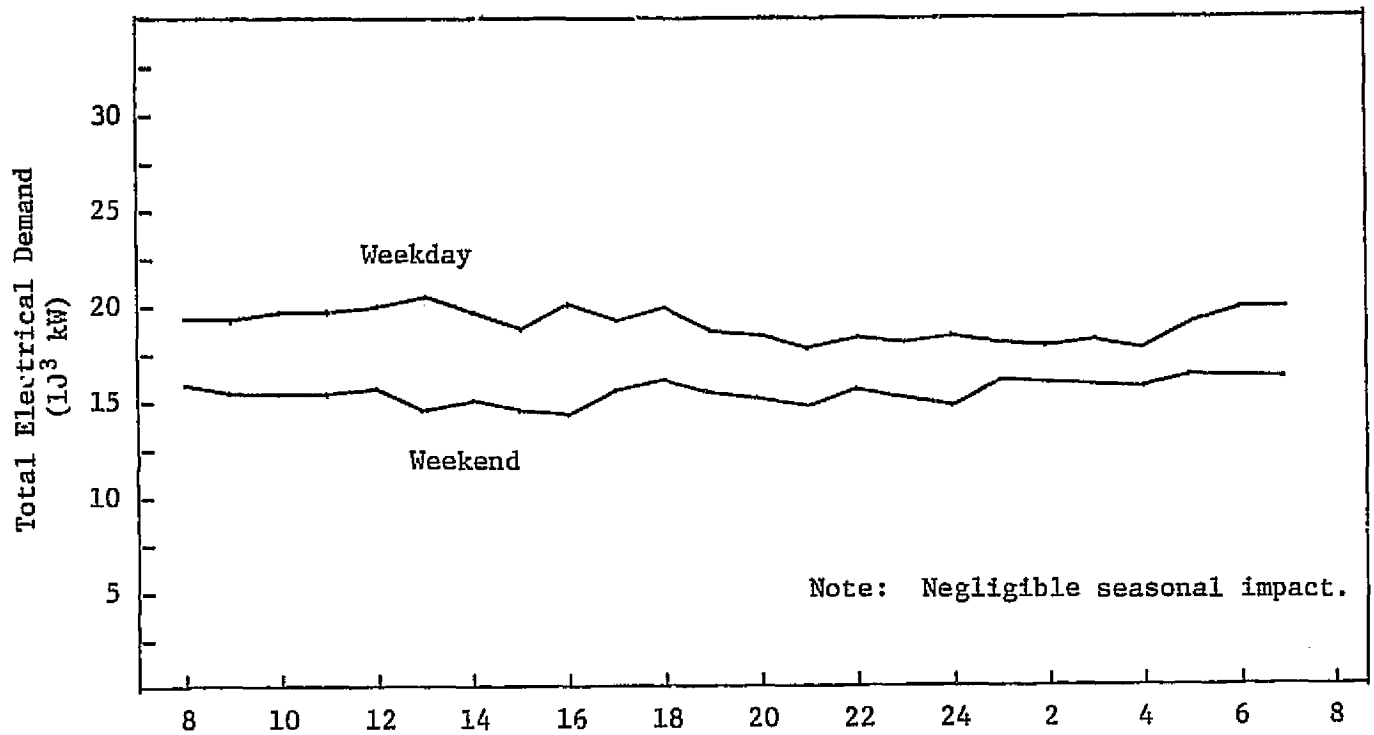

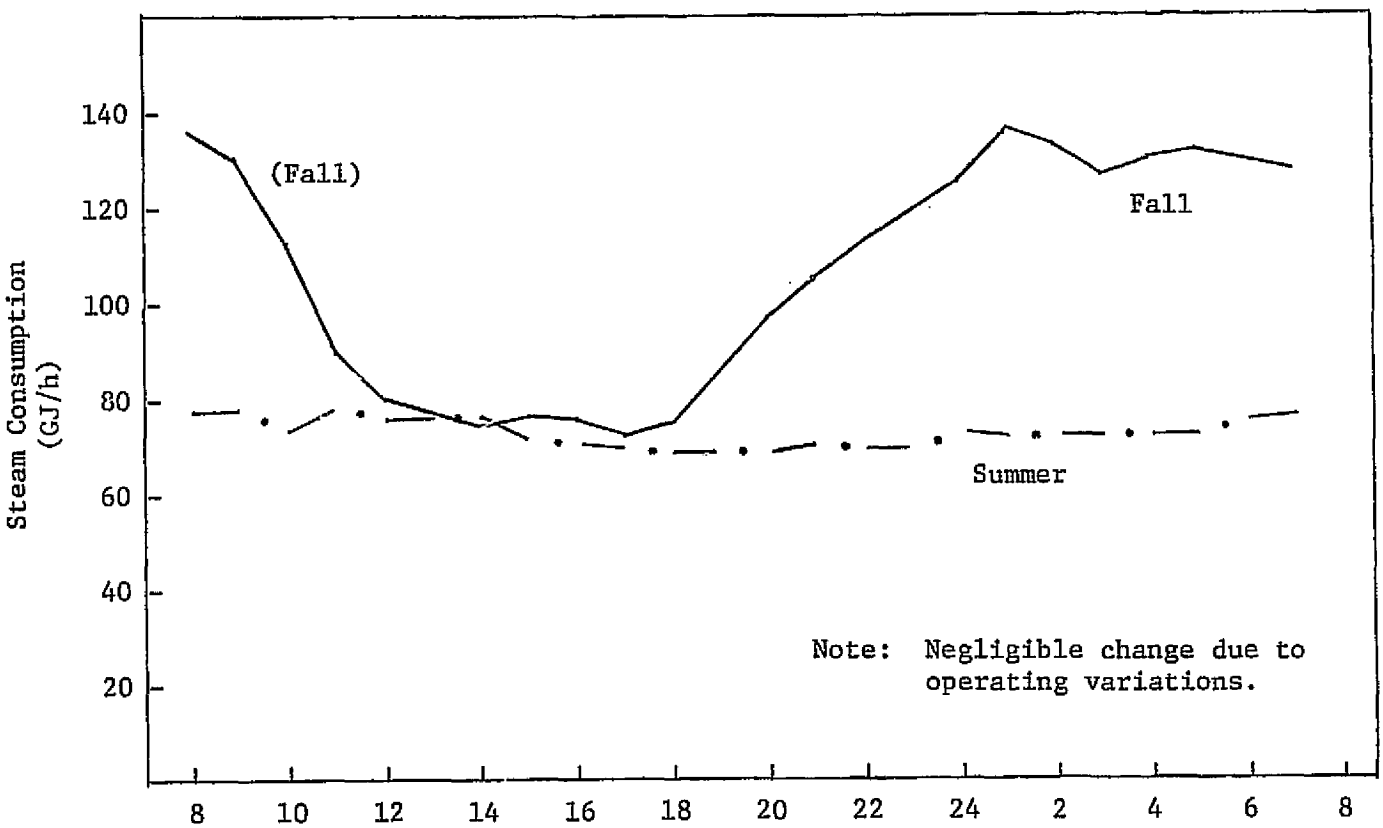

FIGURE 3-5

ELECTROLYTIC COPPER REFINERY 24-HOUR LOAD PROFILES
STEAM AND ELECTRICITY

Unanticipated power outages can have a major impact on the copper refinery. In the electrolysis sections, power outages will simply interrupt production as long as they last. Power outages in the melting and casting operation could have severe effects--tons of molten copper could potentially solidify in the equipment requiring weeks of downtime to recover. Such catastrophic affects could be avoided if the power outage was predictable or was only a partial outage that could be survived by shedding of non-critical loads. The existing power supply from the electric utility company is very reliable. Dual transmission lines connect the plant to the utility grid. No power outages have been experienced in two years of operation.

3.1.4 Thermal Load Profile

Each year the refinery consumes approximately 0.63 x 10^6 GJ in the form of process steam.* The steam is supplied (use pressures are lower) at 690 kPa (saturated) by two 56,688 kg/h boilers capable of firing either natural gas or oil. Despite chemical treatment of boiler feedwater, blowdown is 26% of BFW makeup. When operating at the average steam flow of 31,745 kg/h, almost all of the steam is being consumed by heat exchangers which maintain the electrolyte temperature at about 63°C. Heat loss from the electrolyte tanks is largely by evaporation so almost all of the steam condensate is normally used as makeup water for the electrolyte. Relatively small quantities of steam are used in slime processing and in heating hot water for cathode washing. As the ambient temperature drops, large quantities of steam are required to heat the enormous volume of air flowing through the tankhouse ventilation system and for space heating in other areas of the plant. Maximum observed steam flow at the plant has been 102,038 kg/h, at which time perhaps 65% was used to maintain comfortable working temperatures in the plant.

As shown in Figure 3-2, monthly consumption of steam exhibits a very large seasonal variation for the reasons just described. Steam consumption is high during cold months and low during warm months. During the warm months, variations in daily steam consumption are small, as shown in Figure 3-3, due to the stable plant operation. During the cold months, daily variations in steam consumption can be quite large due to day-to-day variations in average ambient temperature; the record of daily steam consumption during a typical cold week is shown in Figure 3-4. Figure 3-5 illustrates the same kind of effect on the hourly steam demand; the load variation is significant at times when the diurnal variation in ambient temperature is large.

---

*Large quantities of natural gas are used in various melting operations, but this fuel use has not been included in the following analysis. We were concerned only with thermal demands that might be satisfied by fuel cell waste heat.

3.2 RECYCLE PAPERBOARD

3.2.1 Industry Profile

Each year the recycle paperboard industry reprocesses waste paper materials into about 7.25 million tonnes of paperboard valued at roughly $2 billion. This reprocessing requires the consumption of 4200 x 10^6 kWh of electricity, most of which is purchased from an electric utility company.[1] Total energy consumption by the recycle paperboard industry has been estimated at 190 x 10^6 GJ annually.[2]

In 1974, there were 196 recycle paperboard plants operating in the United States. Most of these are located near urban centers to minimize the cost of transporting waste paper to the plant. Plant capacities range from 45 to 363 tonne/day; median capacity is roughly 109 tonne/day.

A significant fraction of the industry is controlled by large companies such as Container Corporation of America and the Packaging Corporation of America (division of Tenneco). But much of it is still held by many small, privately-owned companies. The pattern of ownership makes it difficult to obtain financial statistics pertaining to the industry. However, it is known to be less profitable than the paper industry as a whole, with a very limited capability for attracting new capital investment. The paper industry as a whole is believed to operate at a debt/equity ratio of roughly 50/50.

3.2.2 Process Plant Description

For this study we obtained data from a recycle paperboard plant located in the Northeast with a capacity of 249 tonne/day of dry paperboard. Like many of the plants in the industry, the facility is a mixture of old and new investment. The building and some of the equipment has been in use for over 75 years; other equipment is brand new. The flow of materials and energy through the plant under typical conditions is illustrated schematically in Figure 3-6. Waste paper is received in bundles at the plant, sorted by kind, and stored. As this paper enters the process, it is mechanically dispersed in a hot aqueous slurry by large, electrically-driven beaters. The resulting pulp is mechanically refined to improve the physical properties of the fibers. Coloring, fillers, and other additives may be combined with the pulp before it is formed into a sheet by the continuous papermaking machines. The two machines operated at this plant are driven by back-pressure steam turbines. As the wet sheet comes off a papermaking machine, it passes over a series of steam

---

[1]Some of the large mills, i.e., greater than 227 tonne/day, have on-site power generation; few of the small mills do.

[2]Includes purchased electricity at 0.0105 GJ/kWh (ref. 5).

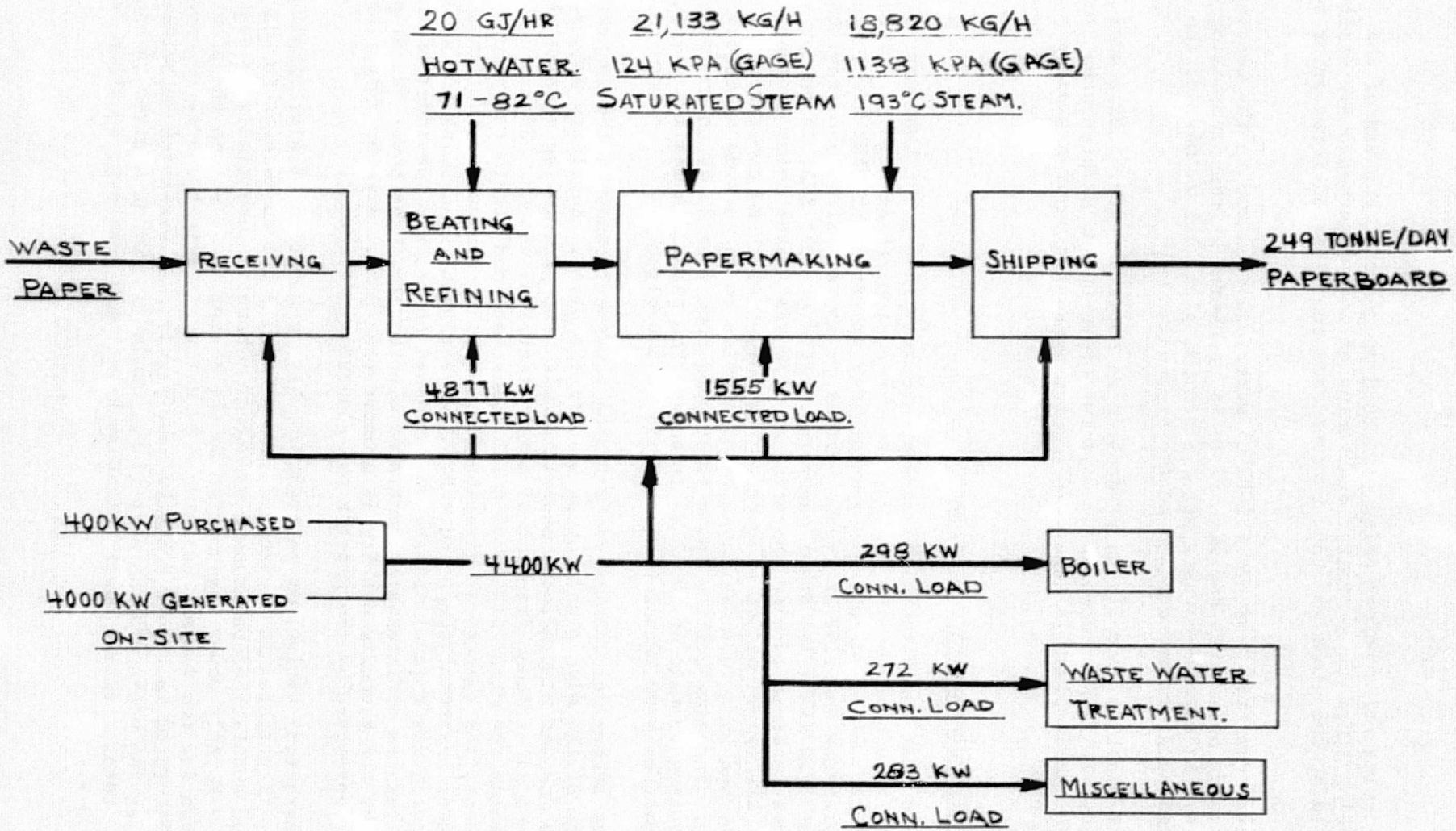

A.D. LITTLE INC.
CASE Nº. 81173-

DRAWN BY:	J.A. BALMER
DATE:	APR. 8, 1978
SCALE:	
DR. Nº	ADL-1019-

FIGURE 3-6 PROCESS FLOW SCHEMATIC
RECYCLE PAPERBOARD MILL

heated drying rolls before being collected on reels at the end of the papermaking line. Only limited quantities of this paperboard are still converted at the plant to other finished and semifinished forms prior to shipment.

Large quantities of hot (71-82°C) water are required in the beating and refining operations and much of it is recovered at the papermaking machines. An extensive waste water treatment plant allows most of the recovered water to be recycled to the process.

The plant is normally in production 24 hours per day, 5 or 6 days per week. It is shut down on Sundays for clean-up and maintenance. In July, the whole plant is shut down for two weeks for major scheduled maintenance.

3.2.3 Electrical Demand Profile

Each year the plant consumes approximately 26.6 x 10^6 kWh, most of which is generated on-site by two, non-condensing, steam-turbine driven generators. A high-pressure steam turbine, operating at 4482 kPa (gage) inlet pressure and 1138 kPa (gage) outlet pressure, drives one generator rated at 3750 KVA. The other generator, rated at 1875 KVA, is run by a low-pressure steam turbine operating at 1138 kPa (gage) inlet pressure and 124 kPa (gage) outlet pressure. The output of these generators is supplemented by a 2000 KVA capacity connection to an outside electric utility. Incoming utility power is stepped down from 23 kV to the plant distribution voltage of 600 V as it enters the plant. A maximum electrical demand of 5200 kW has been observed at the plant.

The mechanical beating and refining equipment consumes the largest fraction of the electrical energy used in the plant. Auxiliary motors, such as fan and pump drives, associated with the papermaking machine also consume a significant fraction of total electrical demand. Figure 3-6 illustrates the distribution of total connected load within the plant. At present, the electrical distribution system is divided so that the wastewater treatment pumps and the boiler equipment (including forced draft and induced draft fans) operate on purchased power; the remainder of the plant operates on internally generated electricity. The power factor perceived by the electric utility is greater than 0.84. A power factor of 0.92 is perceived by the plant's own generating equipment.

Historical variations in total monthly consumption of electrical energy, illustrated in Figure 3-7, are primarily due to changes in the type and quantity of paperboard produced. There is essentially no seasonal effect. Monthly power consumption is the lowest in July when the plant is shut down for two weeks. Variations in daily electrical energy consumption are illustrated in Figure 3-8; the most significant variation is between operating and non-operating days (i.e., Sunday). During a given 24-hour period, total electric power demand is relatively constant, as shown in Figure 3-9.

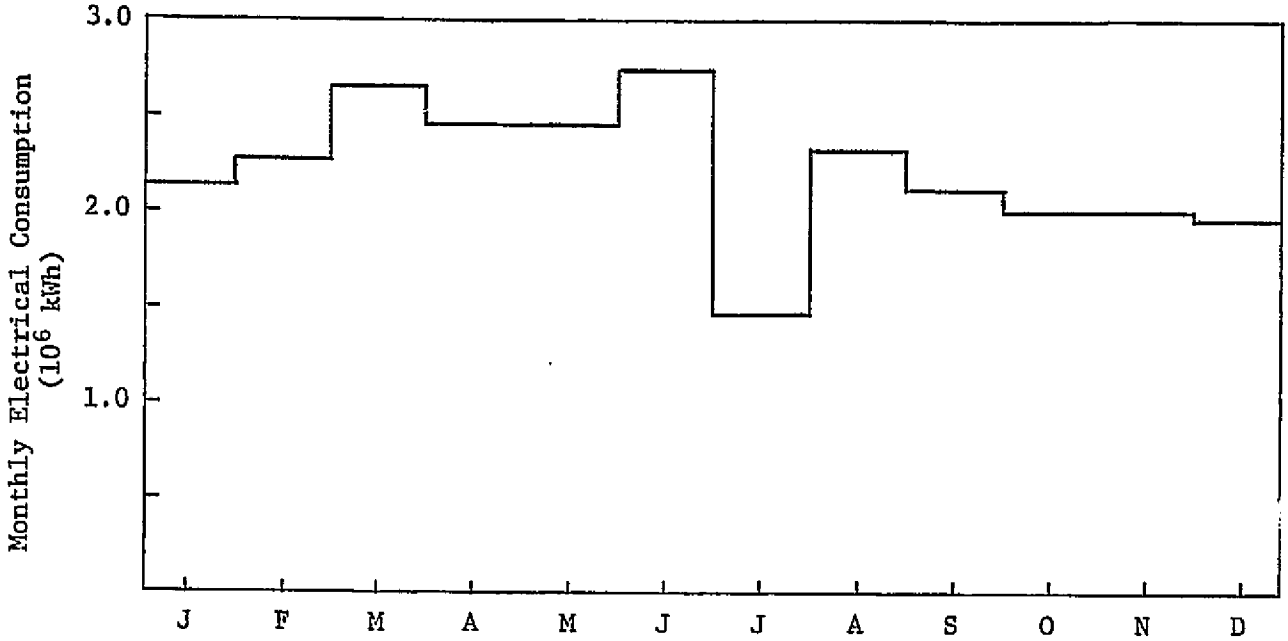

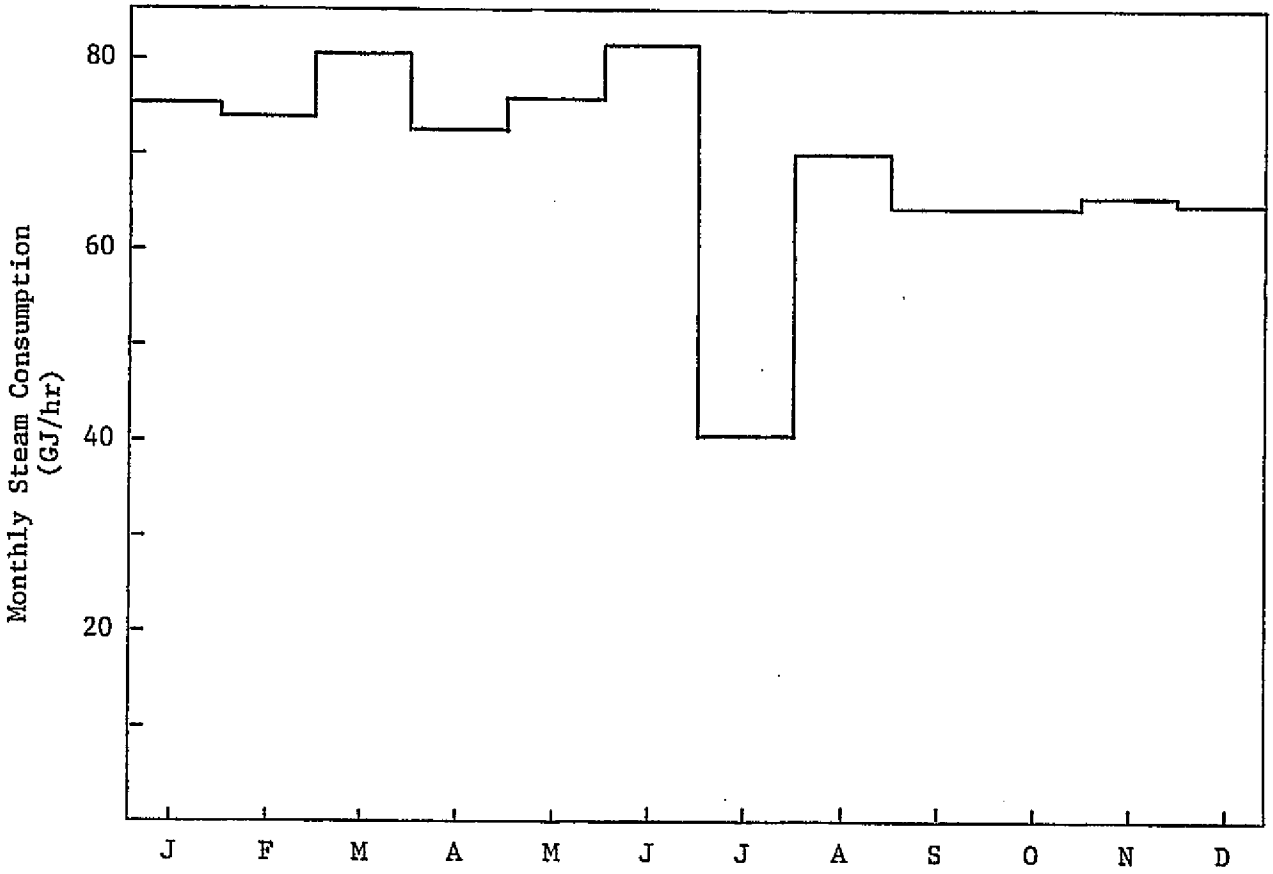

FIGURE 3-7

RECYCLE PAPERBOARD MILL VARIATIONS IN
MONTHLY CONSUMPTION OF STEAM AND ELECTRICITY

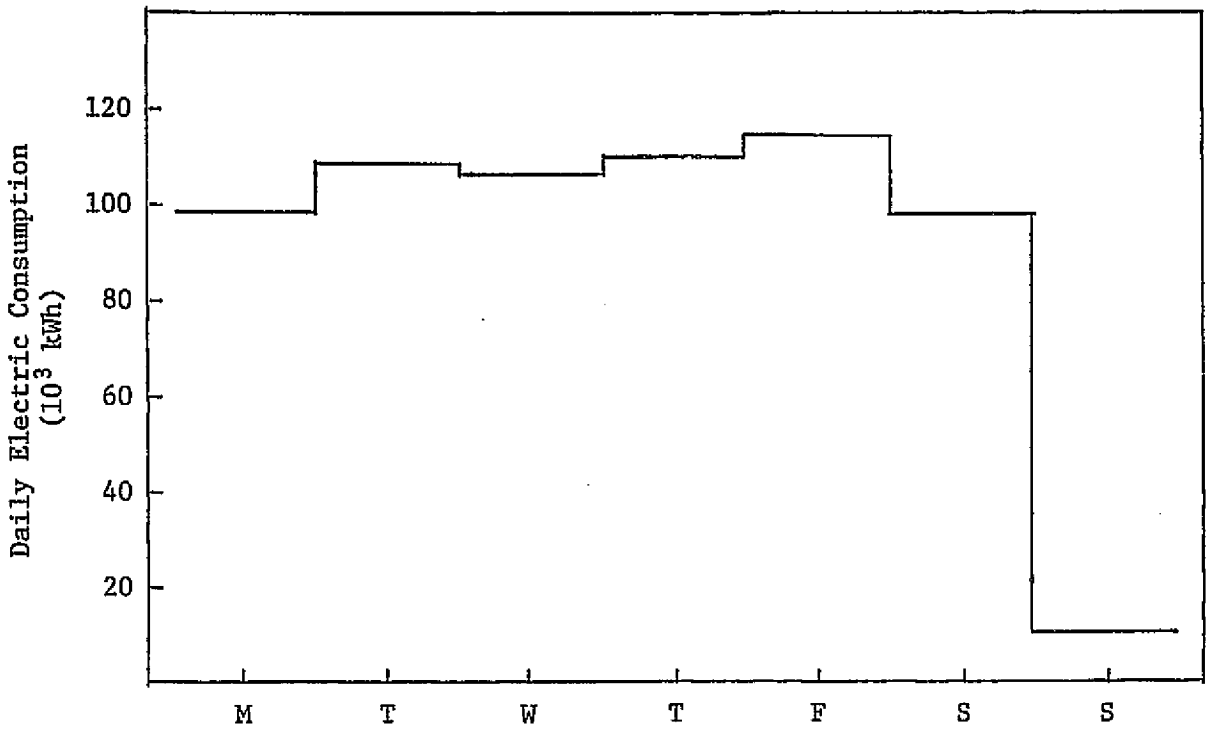

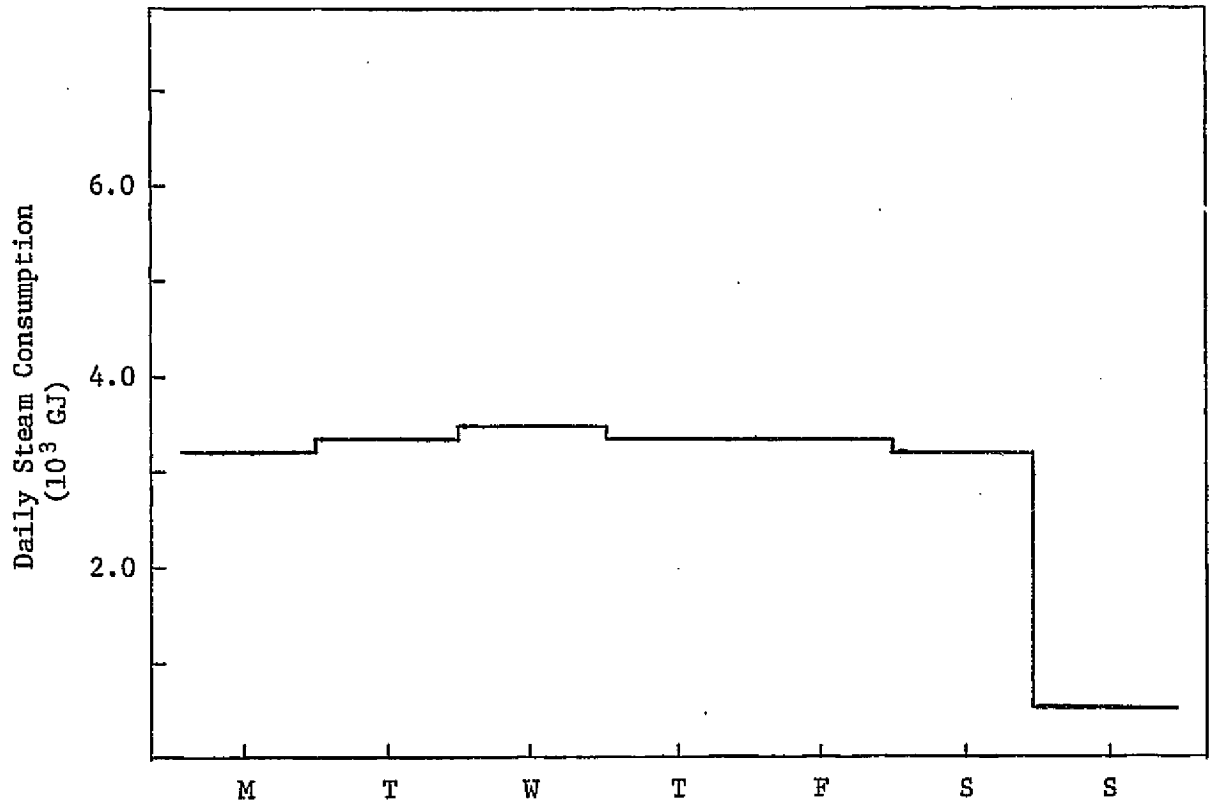

FIGURE 3-8

RECYCLE PAPERBOARD MILL VARIATIONS IN
DAILY CONSUMPTION OF STEAM AND ELECTRICITY

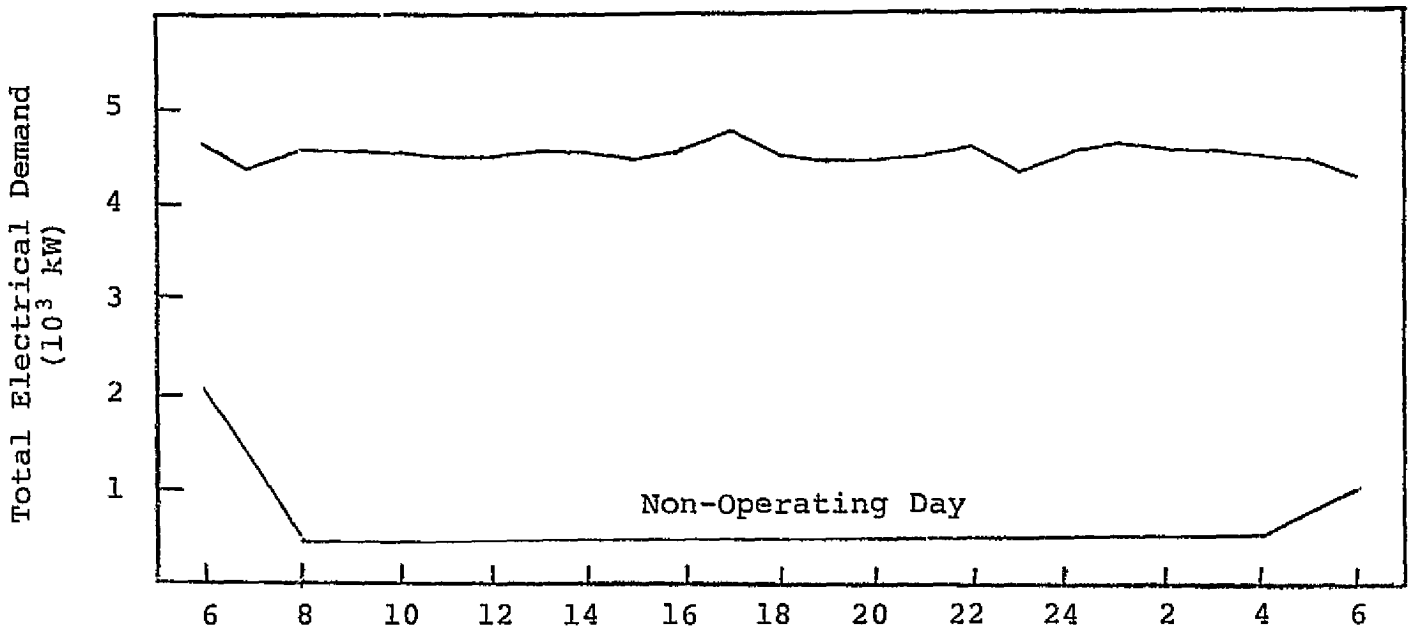

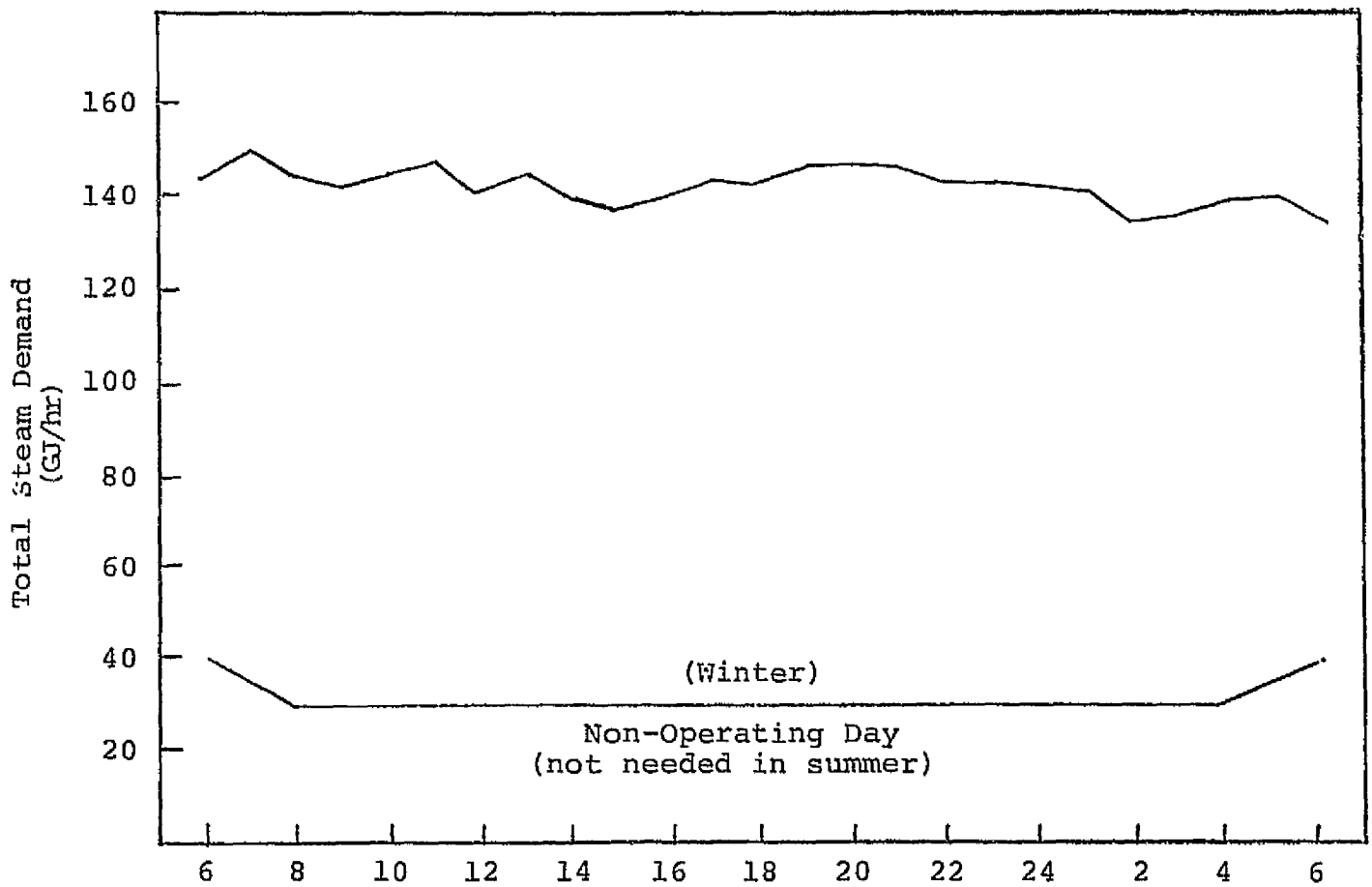

FIGURE 3-9

RECYCLE PAPERBOARD MILL
24-HOUR LOAD PROFILES
STEAM AND ELECTRICITY

Unplanned power outages can be a significant problem in this plant. With the failure of the utility power supply in the present arrangement, the whole plant is shut down because the boiler cannot be operated. This can be a serious problem if ambient temperatures are low enough to freeze water pipes. Failure of the process plant power supply will disrupt paper machine operation and allow tonnes of fibrous pulp to settle to the bottom of the large beaters where it can be difficult to remove. The historical reliability of the electrical supply at the plant is not satisfactory to the present plant management. On the average, purchased power has been interrupted two or three times per year for periods of 15 minutes to 6 hours.

3.2.4 Thermal Load Profile

The recycle paperboard mill annually consumes 0.90 x 10^6 GJ in the form of process steam. A single, oil-fired boiler (converted from coal-firing in the mid-1960's) presently supplies superheated steam at 4482 kPa (gage) and 338°C which is then distributed through the plant as shown in Figure 3-10. Neglecting the electrical generators, most steam within the plant is first used at 1138 kPa (gage to run a number of back-pressure turbines. The 276 kPa (gage) (saturated) exhaust of the paper machine drive turbines is supplemented by steam flow through a pressure reducing valve (PRV) and condensed in the higher temperature paper drying rolls. The remaining turbine drives exhaust saturated steam at 124 kPa (gage) which is supplemented by some more steam let down through another PRV. This low pressure steam is used to heat lower temperature paper drying rolls, air heating coils, process hot water, and in deaerating boiler feedwater.

Typical variations in thermal load--as reported in the recent plant operating records--are shown in Figures 3-7 through 3-9. Steam consumption is also primarily a function of production rate, so these profiles are quite similar to the electrical load profiles. Although one might anticipate a significant seasonal variation in steam consumption at a plant in the Northeast, the influences of production level, paperboard grade, and frequency of grade changes mask any such effect. Although not illustrated in the typical hourly demand profile of Figure 3-9, a maximum process steam flow of 68,025 kg/h has been observed.

3.3 MEATPACKING

3.3.1 Industry Profile

A large and diverse industry sector, the meatpacking industry includes all those establishments primarily engaged in the slaughter of cattle, hogs, sheep, calves, horses, and other animals (except small game, poultry, and fish). The industry accounts for 9% of the gross energy used by the U.S. food industry, or about 105 x 10^6 GJ. Nearly half of this energy is

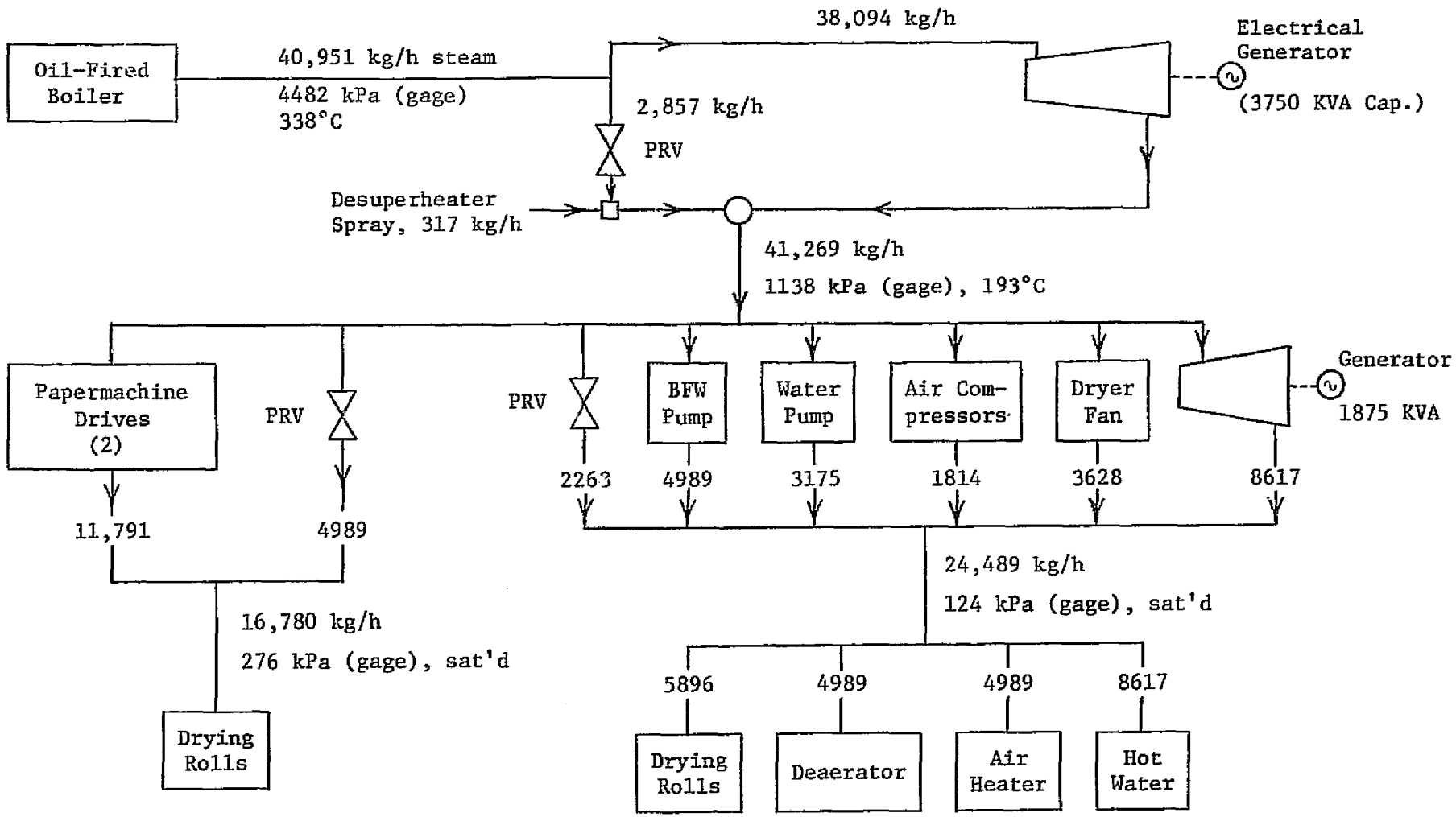

FIGURE 3-10

TYPICAL STEAM BALANCING, KG/H
RECYCLE PAPERBOARD MILL

used in the form of electricity.* In 1976 the industry produced 11,777 million kg of beef, 387 million kg of veal, 168 million kg of lamb and mutton, and 5,630 million kg of pork. Out of a total of 5,916 federally inspected meat plants slaughtering and/or processing meat, 386 only slaughtered meat, 4,285 only processed it; and 1,245 did both. There were 1,665 plants engaged in slaughtering beef, 1,322 slaughtering hogs, and 878 slaughtering sheep and lambs. (These numbers are not mutually exclusive since most plants slaughter more than one specie.) Slaughtering plants vary in size from less than 100 head per year to more than 50,000 head per year.

As the statistics above indicate, the meatpacking industry is indeed very diverse. No one type of plant can be identified as typical. Products of meatpacking plants run the gamut from chilled carcasses to highly processed meat products. There are, however, some discernible trends in the industry. One interesting trend is in the type of slaughtering plants now being built by several of the major companies in the business. Whereas these companies have historically operated large, integrated plants located near major population centers, many of the plants built in recent years have been "kill-and-chill" plants located near the livestock breeding areas. These plants are usually of medium size, slaughtering 200-2,000 head of cattle per week, and just ship chilled carcasses or major pieces of meat without any extensive processing. Through such plants, the industry has tried to reduce the cost of transporting meat from farm to market.

The meatpacking industry is dominated by a number of large companies, including: Armour, Swift, Rath, and Morrell. A debt/equity ratio of 50/50 is typical of the industry. Information on the typical return on investment performance in the meatpacking industry is not publicly available; however, prudent managers in the industry are known to seek a minimum after-tax return of 10-12%.

3.3.2 Process Plant Description

The meatpacking plant selected for this industry is a simple slaughtering facility located in California which handles both cattle and sheep. Normal output of the cattle slaughtering line is 550 head per week, which is near the median size of California cattle slaughterers. It is one of the largest sheep slaughtering facilities with a normal kill of 12,000 head per week. The plant is a little unusual in not processing any rendering or blood processing equipment. Blood and inedible byproducts are, instead, shipped to a nearby rendering plant.

The flow of materials and energy through the plant is indicated schematically in Figure 3-11. Peak electrical load and typical steam loads are shown. Cattle and sheep are held for short periods of time in sheds

*Based on .0105 GJ per kilowatt-hour of purchased electricity.

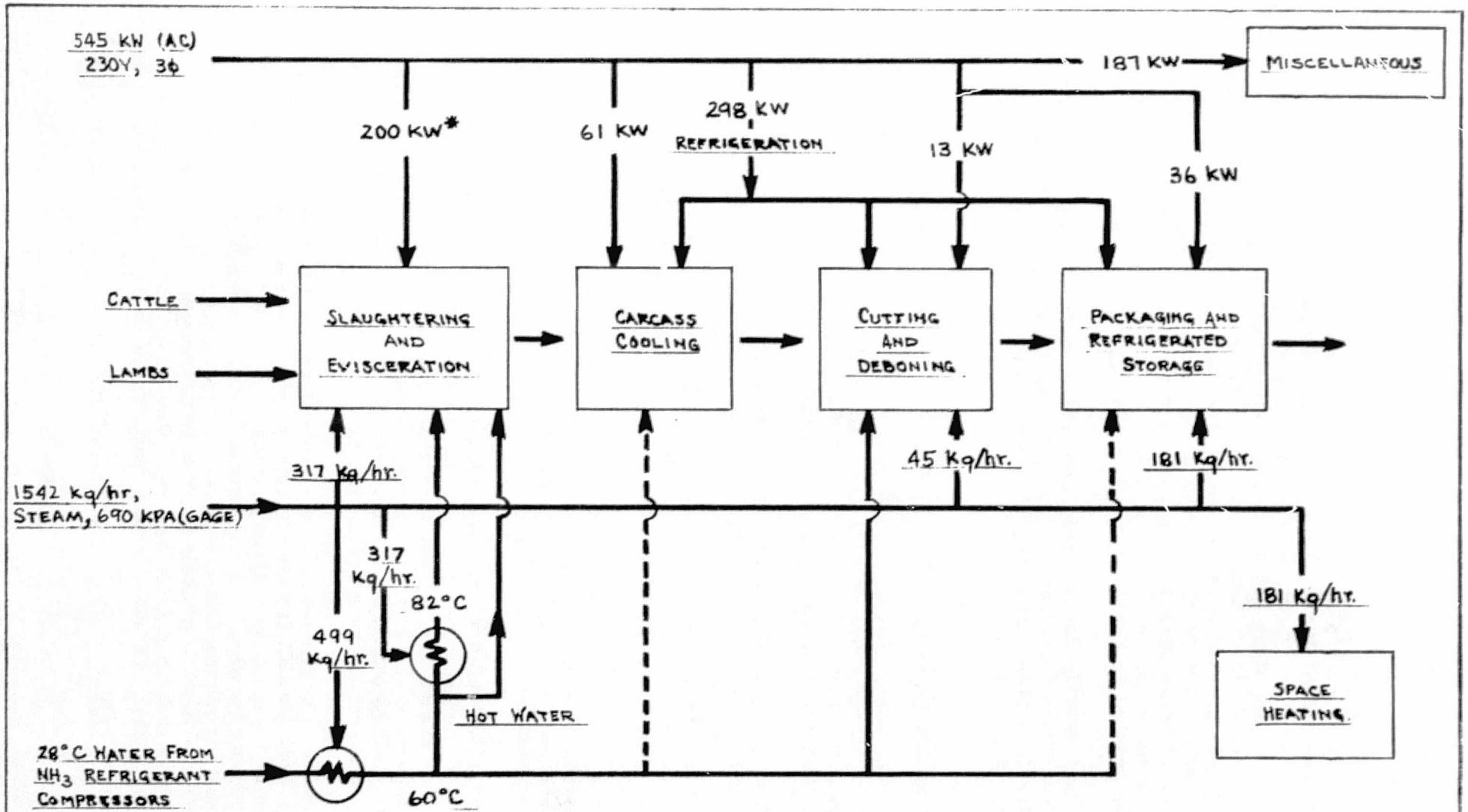

FIGURE 3-11 PROCESS FLOW SCHEMATIC
MEATPACKING PLANT

A.D.LITTLE INC.
CASE Nº.81173

DRAWN BY.	J.A.BALMER
DATE:	APRIL 17, 1978
SCALE:	—
DRG.Nº.	ADL-1021-1

adjacent to the process plant. After being taken from these pens the animals are mechanically immobilized and then hoisted on two, parallel conveying lines--one for cattle, the other for sheep. The animals are stuck and bled, and hides and heads are removed manually. Viscera are removed and washed before being boxed and chilled for export. Tripe is most extensively processed, being washed and then scalded with live steam before packaging. The fresh eviscerated carcasses are hung in large chillers for 24 hours before being cut and deboned. Most of the meat shipped from the plant is in the form of beef and lamb quarters; a small fraction is reduced to major cuts and then boxed.

The plant usually works a full production shift five days per week and occasionally on Saturday. The process day starts at about 6 a.m.; slaughtering is active until roughly 3 p.m. when clean-up begins; clean-up is finished by 9 or 10 p.m.

3.3.3 Electrical Load Profile

Each year, the meatpacking plant consumes 2.66 x 10^6 kWh of electricity which it purchases from an electric utility company. This power is delivered to the plant boundary as 230 V, 3-phase AC power. A peak electrical demand of 545 kw has been observed.

The distribution of connected load within the plant has been indicated in Figure 3-11. The dominant load is the electrical drives of the refrigeration compressors. These centrally located, ammonia compressors provide cooling for all parts of the plant including the carcass coolers, cutting and deboning rooms, packaging areas, and product storage. The next largest load is composed of the numerous electrical drives in the slaughtering and viscera processing areas; the dominant motors in these areas are the high-volume water pumps in the beef and sheep carcass washers. Auxiliaries, such as air compressors and well water pumps consume a significant fraction of the power. Lights, fans, and other miscellaneous equipment account for the remainder.

The variations of utility loads with time, as reported in the operating records of the meatpacking plant, are summarized in Figures 3-12 through 3-14. Figure 3-12 illustrates the slight, seasonal variation in monthly consumption of electrical energy due to ambient temperature effects on the plant refrigeration load. The refrigeration load and monthly electric power consumption are greatest in the warmer, summer months. Figure 3-13 illustrates the variation in daily consumption of electricity over a production week. On the weekend, the temperature of the meat in storage is steadily dropping, so the cooler refrigeration load decreases to a minimum on Sunday. Figure 3-14 shows how the electrical load varies within a 24-hour production day. The load rises during the morning hours when hot carcasses are moving from slaughter to the carcass coolers. Demand drops during the lunch hour when the slaughter ceases. It picks up slightly after lunch when slaughter is resumed, but then drops steadily as equipment is shut off and the meat temperature in the coolers decrease.

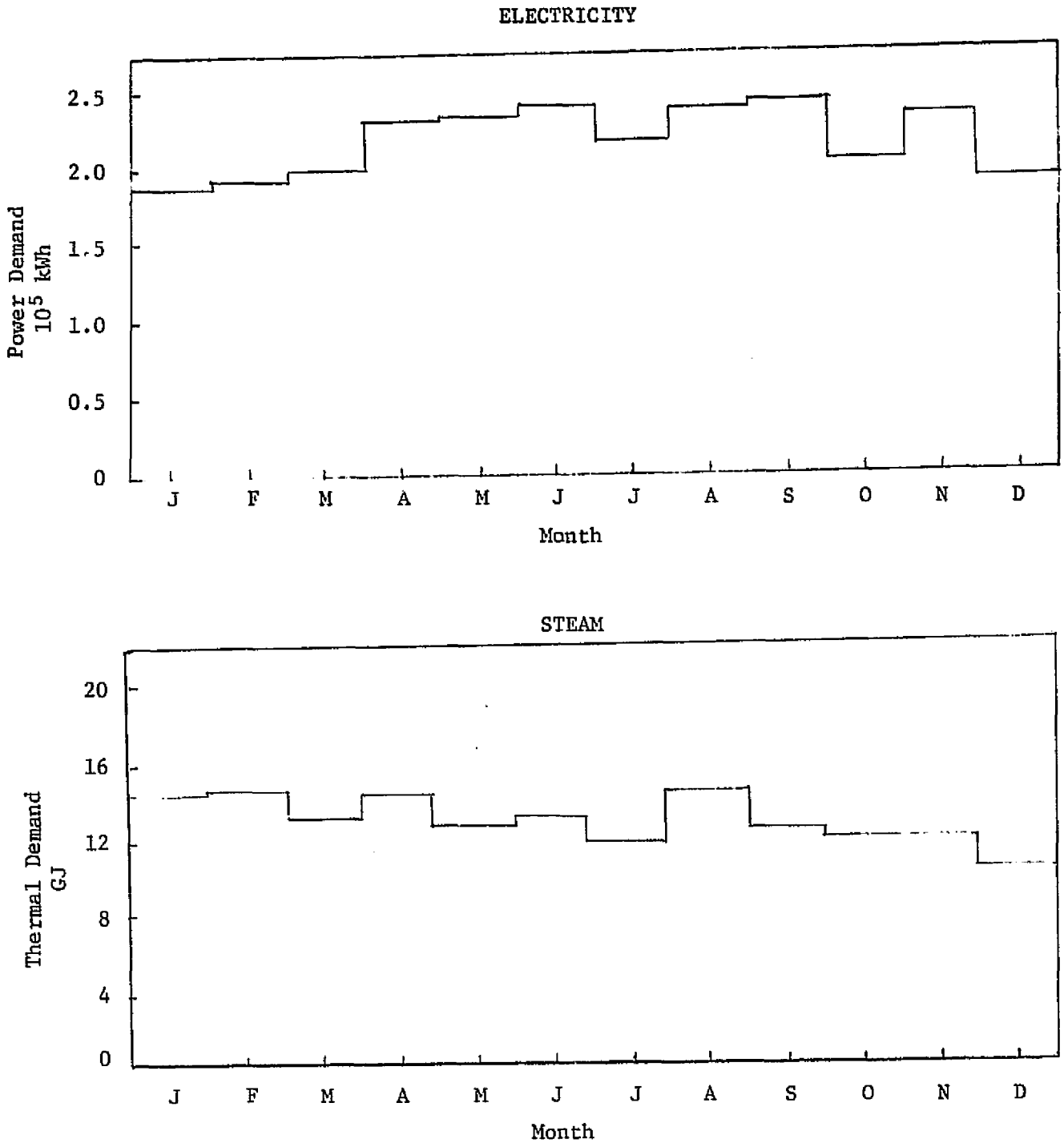

FIGURE 3-12

MEATPACKING PLANT
MONTHLY ELECTRICITY AND STEAM DEMAND

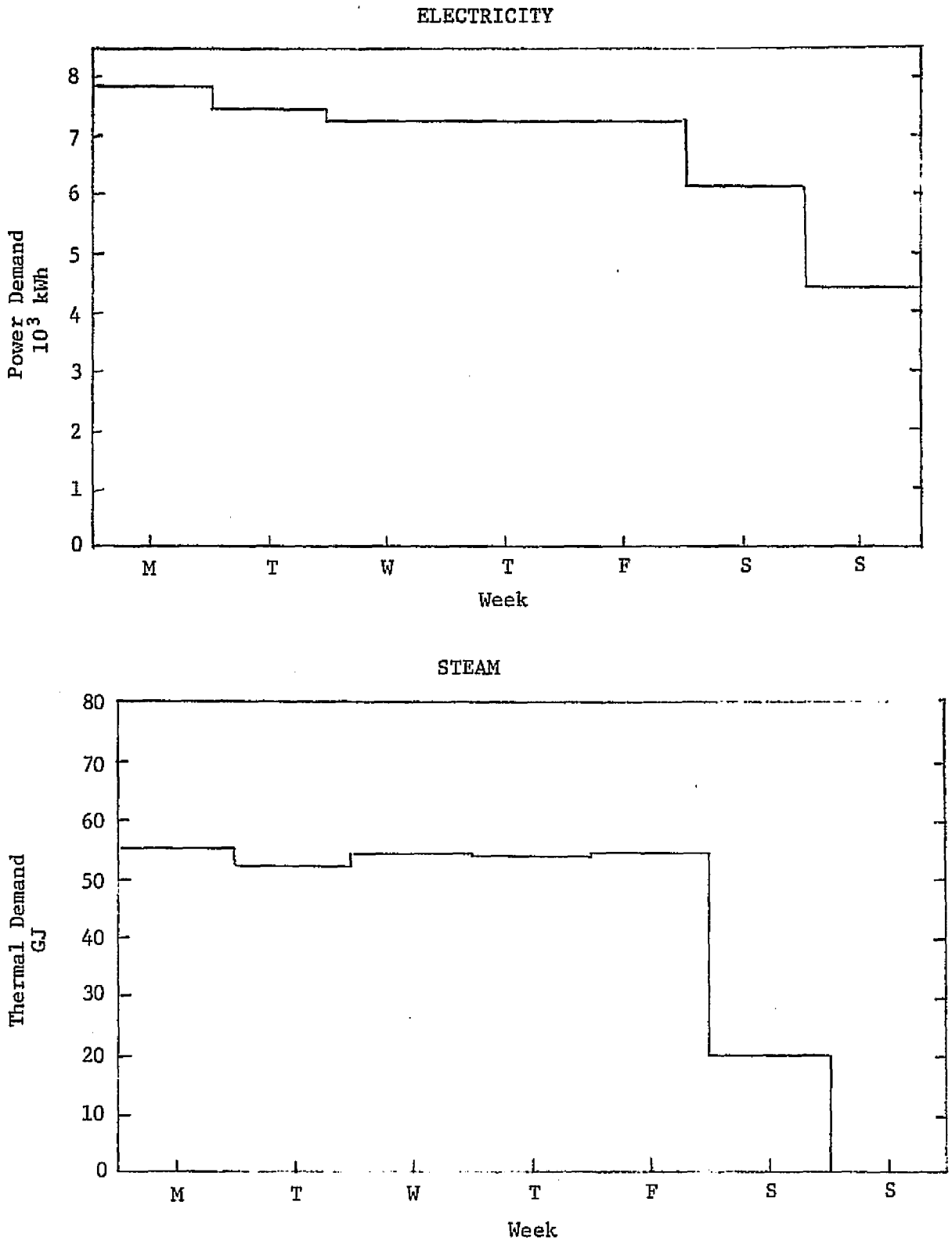

FIGURE 3-13

MEATPACKING PLANT
DAILY ELECTRICITY AND STEAM DEMAND

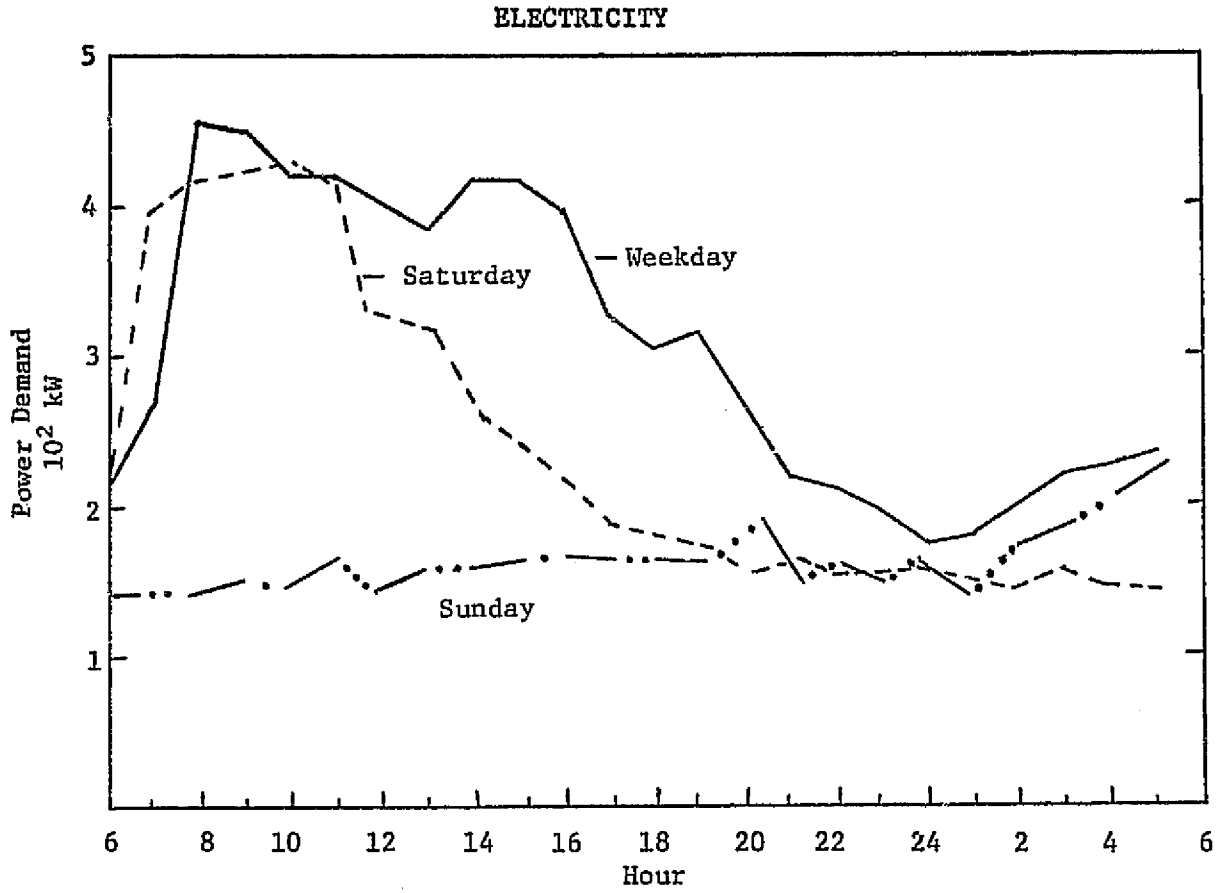

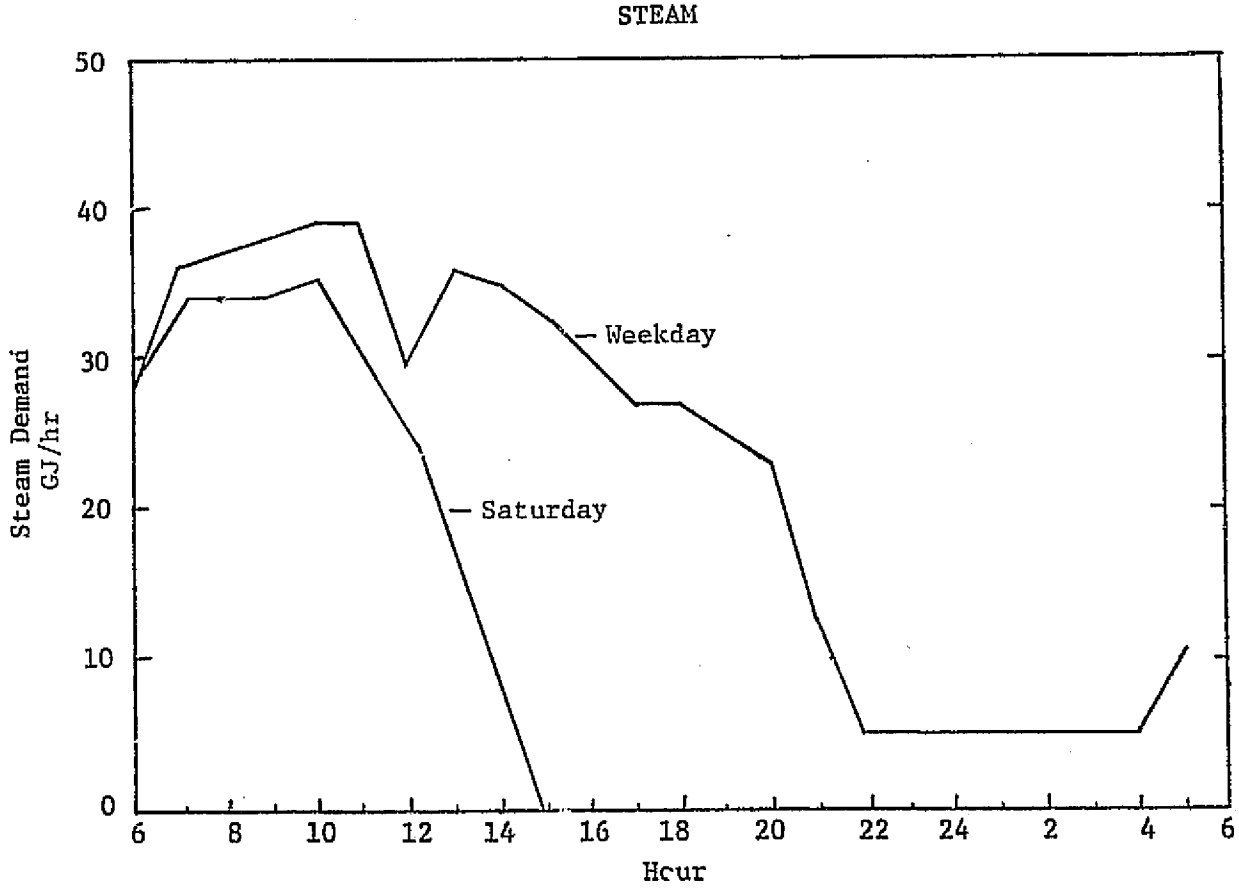

FIGURE 3-1.
MEATPACKING PLANT
HOURLY ENERGY DEMAND PROFILES

The illustrated Saturday load profile shows the effect of a shortened production shift. The load profile on Sunday is quite flat.

Unanticipated total power outages can have a severe economic impact on the meatpacking plant. Outages lasting a few hours might cause damages of nearly $50,000 in the form of spoiled carcasses caught outside of the coolers in the slaughter area. Outages lasting more than four hours could cause much greater losses due to spoiling of meat held in the coolers. The plant has suffered several outages in the past; the longest lasted five hours but, since it occurred at night when ambient temperatures were low, no meat in the coolers was spoiled.

3.3.4 Thermal Load Profile

Heat is required at various points in the meatpacking plant in the forms of hot water, live steam, and hot air. Heat is presently supplied to these locations in the form of 690 kPa (gage) (saturated) steam generated by an oil-fired boiler rated for 4535 kg/h capacity. Heat exchangers transform the steam heat to the desired form. Because the make-up water is so high in dissolved solids and is not treated outside the boiler, the boiler blowdown rate is about 43% of the BFW make-up rate.

Hot water required in the process is preheated from the supply temperature of 21°C to approximately 28°C by heat exchange in the ammonia refrigerant condensers. The largest single use of steam in the plant is in a heat exchanger which heats this water to 60°C for use in plant clean-up. The next largest steam load is for raising part of the hot water to 82°C in another steam heat exchanger for use in sterilization of conveying viscera tables. Live steam is used directly to heat carcass trolley wash water, in the tripe scalder and a plastic wrap shrink tunnel, and in numerous small knife pots in the slaughtering and meat cutting areas. A relatively small quantity of steam is used for space heating within the plant. A typical distribution of thermal load is indicated in Figure 3-11.

Figure 3-12 illustrates the insignificant variation experienced in monthly steam consumption. The slight decline over the year was due to implementation of an energy conservation program at the plant. If the plant had been sited at a less temperate location, a seasonal effect would have been observed due to larger space heating requirements.

Figure 3-13 shows how daily steam consumption varies during a week. Because the plant operates only part of Saturday, the steam consumption then is low. Steam requirements are essentially nil on Sunday.

Figure 3-14 shows the hourly steam demand during the production cycle. On a normal weekday, the initial steam demand is quite high due to the large quantities of hot water used by the viscera tables and carcass washers, and the steam required by the tripe scalder. Steam demand drops as production slows during the lunch hour. Production resumes after lunch

and concludes around 3 p.m. The use of hot water for clean-up maintains steam demand until about 8 p.m. when all uses but space heating cease. After production and clean-up are finished in early Saturday afternoon, even space heating is eliminated and the boiler is shut down. Although not shown in Figure 3-14, a maximum steam flow of 2358 kg/h has been observed.

PRECEDING PAGE BLANK NOT FILMED

4.0 PLANT UTILITY SYSTEM CONFIGURATION

4.1 STUDY CASE DESCRIPTION

Five system design cases were developed for each of the industry's plants characterized above. Four of these cases utilize fuel cells to provide the total electrical requirement for the plant and to provide a portion of plant thermal requirements. A fifth case assumes purchased electricity and utilizes steam boilers to furnish total plant thermal requirements. In all cases, the fuel cells are fueled by naphtha and high sulfur coal is the designated fuel (by NASA) for boilers except where boiler size and system economies-of-scale make this fuel impractical. In this case, low sulfur fuel oil was allowed.

A brief description of each of the study cases is provided below.

Study Case A

Case A utilizes pressurized fuel cell modules (Type A) with balancing boilers to match plant thermal demand. No connection to an electric utility is provided for standby power, therefore backup fuel cell modules are required to obtain utility-system-equivalent reliability.

Study Case B

Case B is the same as Case A except that the pressurized fuel cell is replaced with a module (Type B) that operates at atmospheric pressure and 10°C lower temperature, and has a lower electrical efficiency and capital cost.

Study Case C

Case C is the conventional baseline system which utilizes combustion boilers to furnish total plant thermal demand. Electricity to operate the plant is purchased from the local utility.

Study Case D

Case D utilizes Type A fuel cell modules with balancing boilers to match plant thermal demand. A utility connection is provided for standby power which reduces the number of backup fuel cell modules needed to obtain the necessary reliability.

Study Case E

Case E is the same as Case D except that the Type A fuel cell is replaced by Type B modules operating at atmospheric pressure.

4.2 GENERAL DESIGN CONSIDERATION

4.2.1 Fuel Cell Characteristics

The characteristics of the two types of fuel cells employed in this study were provided by NASA-Lewis Research Center. The important design features of Type A and Type B fuel cells are summarized in Table 4-1. The main performance differences between the two types of cells are the power section operating conditions and the electrical efficiency. Type A operates at 379 kPa and 191°C and Type B at 103 kPa and 28°C lower in temperature. Type A also has a higher electrical efficiency.

The variation in thermal and electrical efficiency with load for the two cells is shown in Figure 4-1. The figures show the percentage of fuel heating value that results in the form of energy shown. Maximum electrical efficiency is achieved at about 80% of load and is nearly constant over the range of 50-100% of load. The percentage of heat appearing as steam is reported on a net basis. A major portion (2/3) of the gross heat is needed to generate steam for the naphtha reformer associated with the power section.

A flowsheet of the reformer and power section interconnections is shown in Figure 4-2. Statepoint conditions and flow rates for the designated streams are shown in Appendix G.

Plot area requirements for the fuel cell and reformer pallettes were estimated at 0.03 m^2 per kilowatt for 3 megawatt systems and 0.07 m^2 per kilowatt for 100 kilowatt systems. The pallettes are assumed to have a maximum height of 5.5 m and the specific weight of the reformer and power sections is 18-23 kg/kW.

The availability of an individual fuel cell and reformer combination module was assumed to be 95% of the time on a yearly basis. Conversely, the unplanned outage rate is 5%.

Inert purged gas requirements for the reformer and power sections were based on FCG-1 demonstrator specifications as follows:

Startup (30 min. peak)	-	363 g/hr/kW
Normal Operation	-	1.8-22.7 g/hr/kW
Storage Volume	-	4 kg/kW capacity

Purge gas may not be required by a commercial fuel cell. It was included here to be conservative. The effect on total investment was 0.5 to 2% depending on system size.

Operating and maintenance costs were estimated at 0.065¢/kWh plus one-half the sum of reformer and power section installed costs after 30,000 hours of operation. Selling prices for the fuel processor and power section are presented in Section 5.0 of this report.

TABLE 4-1

SUMMARY OF FUEL CELL CHARACTERISTICS

	Type A	Type B
Power Section Conditions		
Pressure, Psia	379	103
Temperature, °F	191	163
Electrical Efficiency, %		
100% Load	39	32
Maximum (80% Load)	40	33
Practical Overall Efficiency*		
100% Load	86	86
Maximum (80% Load)	89	89
Energy Profile - 100% Load	MJ/kWh (%)	
Fuel	9228 (100)	11,241 (100)
Electricity	3599 (39)	3599 (32)
High Grade Heat (Net)	1291 (14)	2024 (18)
Low Grade Heat		
- Recoverable	3045 (33)	4046 (36)
- Wasted	1293 (14)	1572 (14)

*with waste heat recovery above 49°C.

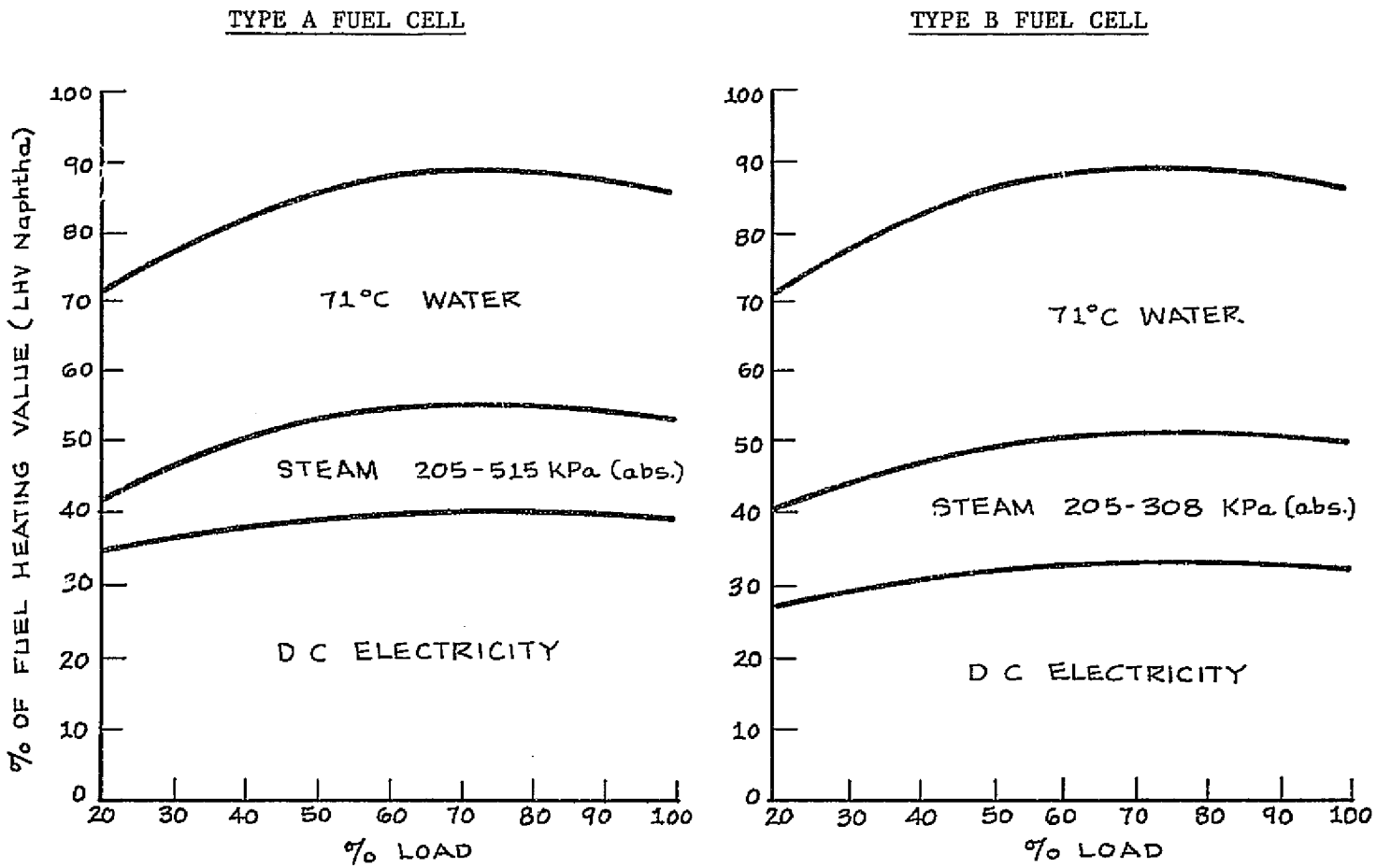

FIGURE 4-1

EFFICIENCY OF FUEL CELL POWER SYSTEM

Fuel Processor and Power Section only;
Power Conditioning not Included

Source: NASA-LeRC

Arthur D Little, Inc

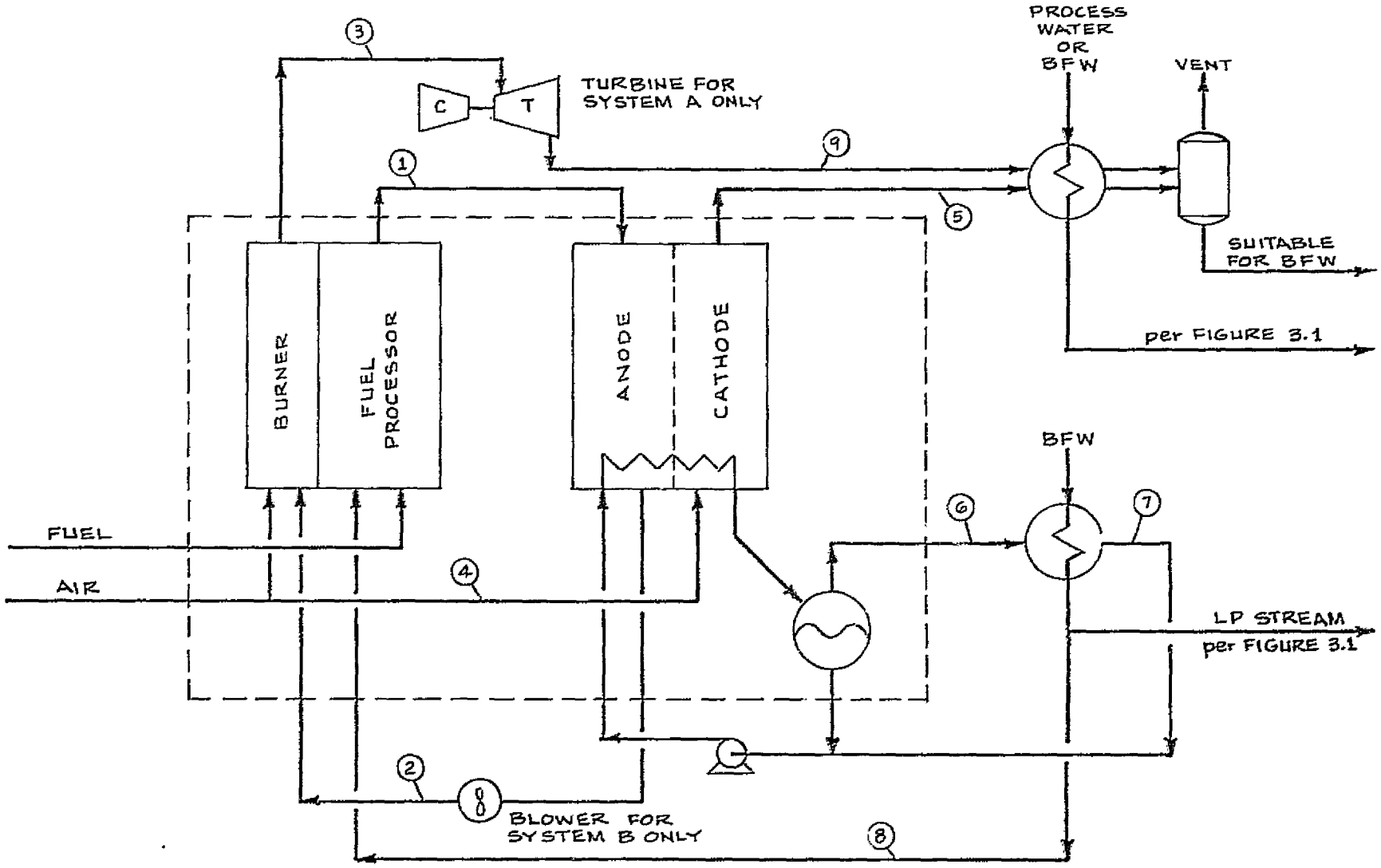

FIGURE 4-2

FUEL PROCESSOR/POWER SECTION SCHEMATIC

Source: NASA-LeRC

Note: Exhaust gas stream may be combined before heat exchange or may have separate heat exchangers. Design by ADL.

4.2.2 Selection of Module Sizes

4.2.2.1 Fuel Cells

Various constraints were considered in the selection of fuel cell module size. The main factors considered were unit availability (reliability), system cost, and redundancy (spare). In general there was also a preference for an even number of modules to facilitate the equipment arrangement and layout.

Reliability was considered by making a statistical determination of system availability using the following relationship:

$$A = \sum_{k=o}^{k=m-n} P$$

where $P = (1-a)^k (a)^{m-k} \left[\frac{m!}{k!(m-k)!}\right]$

A = system availability
a = module availability = 0.95
m = number of units installed
n = number of units operating

This relationship accounts for all possible combinations of outages assuming a random occurrence. Using this relationship, system availabilities were calculated by a computer for an array of m installed and n operating units. The system unavailable time was estimated using the following expression:

$$\Theta_u = (1-A)H_{fp}$$

where Θ_u = total unavailability of n operating modules, hr/yr
H_{fp} = annual full plant production hours*, hr/yr
(1-A) = unavailability of n modules with m modules installed

By considering only the full production hours/year, load probability was factored into the analysis in an approximate manner.

Using this approach the number of installed and operating fuel cells was determined to achieve a given system reliability index. By itself, this technique tends to drive the answer in the direction of a larger number of smaller modules. However, module unit costs increase with decreasing

*Time when n modules required to meet electric load.

size (see Appendix Figure G- 2). Therefore, potentially there is an optimum module size that will provide the required availability at minimum cost. Consequently, system cost was also considered in this module size selection process.

The results of this assessment of optimum module for the run-off candidates in each industry are summarized in Table 4-3. System unavailability and total purchased equipment cost are presented for the selected configurations. The reliability indices for the copper refinery and the meatpacking plants are lower than for recycle paperboard since power interruption during an operating day represents a large cash loss of inventory. Note that for all the selected cases the excess capacity above maximum operating requirements is at least 40%.

4.2.2.2 Boilers

In sizing the steam boilers for the fuel cell cases, the most important variable considered was the range of thermal to electric load ratios, since the boiler capacity needed is a function of the difference between the thermal and electric loads. The range of possible thermal and electric loads is shown in Tables 4-4 to 4-6 for each industry. Thermal demand at each plant is shown for peak and seasonal extremes. The fuel cell thermal output is shown for normal and extreme conditions. The coincidence of these conditions results in the thermal deficits indicated.

The design philosophy used in selecting boilers was to provide two boilers to cover the normal shortfall between plant demand and fuel cell thermal output. A third boiler is provided to cover the maximum thermal shortfall shown in Tables 4-4 to 4-6. Under normal conditions the third boiler would be used in standby position. The same general philosophy was applied to the selection of boilers for the conventional study case. The only difference in this case is that the thermal load supplied by the boilers is not affected by electric consumption, since there is no self-generation of electricity.

The number and size of boiler modules selected for each industry are also summarized in Tables 4-4 to 4-6. The steam demand for the meatpacking plant is so small that a single oil-fired package boiler is all that is required. In this case no backup boiler is used since the reliability of a package oil-fired boiler would be superior to that of the field erected coal-fired boilers used in the other two industries.

4.2.3 Designs with Utility Connection (Cases D & E)

An analysis was made of cases (D & E) where a connection to the local electric utility was retained and the amount of excess fuel cell capacity was reduced. A cost trade-off analysis was made to determine the appropriate number of spare fuel cell modules to install when standby power is available from the utility.

TABLE 4-3

RESULTS OF RELIABILITY ANALYSIS
FUEL CELL MODULE SIZES

INDUSTRY:	COPPER	PAPER	MEATPACKING
Peak Demand, kW (AC)	--	5,200	545
F/C Output, kW (DC)	22,000	5,415	568
Configuration			
Unit Capacity, kW	2,200	775	114
Number Units Installed	14	10	8
Number Units Operating (Maximum)	10	7	5
Capacity Ratio, kW/kW	1.40	1.43	1.60
Availability			
Percent	99.957	99.897	99.963
Operating Factor*, hr/yr	8,300	7,500	6,250
Unavailable Time, hr/yr	3.6	7.7	2.3
Maximum Outage Allowed, hr/yr	4.0	8.0	4.0
Module Cost (Type A)			
Power Section, $K	255	99	16.5
Processor	190	72	12.0
Total Module (FOB Equipment)	445	171	28.5
TOTAL CONFIGURATION COST, $K	6,230	1,710	228

*Hours per year when n operating cells are required (H_{fp}).

TABLE 4-4

COPPER REFINING INDUSTRY
UTILITY SYSTEM DESIGN CONDITIONS
SUMMARY

	CASE A			CASE B			CASE C
	Power Load (DC), kW						
	22,000	18,000	11,000[e]	22,000	18,000	11,000[e]	--
THERMAL DEMAND[a], GJ/HR							
Peak (winter)	248.5	248.3	247.5	246.9	246.6	246.4	245.4
Normal Winter Weekday	154.9	154.9	154.9	154.9	154.9	154.9	154.9
Normal Summer Weekday[b]	78.0	78.0	78.0	78.0	78.0	78.0	78.0
FUEL CELL HEAT OUTPUT, GJ/HR							
As Steam	28.5	25.3	14.2	44.5	36.4	22.2	0
Low Level Waste Heat[c]	70.9	63.3	36.8	109.8	89.9	54.9	0
TOTAL	99.4	88.6	51.0	154.3	126.3	77.1	0
DEFICIT THERMAL ENERGY FROM BOILERS, GJ/HR							
Peak (winter)	149.1	159.7	196.5[d]	92.6	120.3	169.3[d]	245.4[d]
Normal Winter Weekday	55.5	66.3[d]	103.9	33.5	41.6[d]	55.8	154.9[d]
Normal Summer Weekday[c]	49.5	52.7	63.8	33.5	41.6	55.8	78.0
BOILER CAPACITY, KG/HR	30,000			25,000			36,000
Number of Units	3			3			3

[a]Winter demand includes space heating which can be supplied by low level waste heat.
[b]As steam; no heating of ventilation air.
[c]L.L. waste heat only utilized to offset winter demand.
[d]Controlling conditions for module size selected.
[e]Minimum power demand occurs when some refining cells are taken out of production.

TABLE 4-5

RECYCLE PAPERBOARD INDUSTRY
UTILITY SYSTEM DESIGN CONDITIONS
SUMMARY

	CASE A			CASE B			CASE C
	Power Load (DC), kW						
	5,415	5,000	604[d]	5,415	5,000	604[d]	--
THERMAL DEMAND[a], GJ/HR							
Peak (winter)	163.4	163.4	63.2	163.4	163.4	63.2	159.5
Normal Winter Weekday	133.9	133.9	32.7	133.9	133.9	32.7	133.9
Normal Summer Weekday	112.8	112.8	16.3	112.8	112.8	16.3	112.8
FUEL CELL HEAT OUTPUT, GJ/HR							
As Steam	7.0	6.4	0.7	11.0	10.1	1.3	0
Low Level Waste Heat[b]	18.4	17.1	2.1	20.0	18.5	2.2	0
TOTAL	25.4	23.5	2.8	31.0	28.6	3.5	0
DEFICIT THERMAL ENERGY FROM BOILERS, GJ/HR							
Peak (winter)	138.0	139.9	60.4	132.4	134.8	59.7	159.5
Normal Winter Weekday	108.5	110.4[c]	29.9	102.9	105.3[c]	29.2	133.9[c]
Normal Summer Weekday	87.4	89.3	13.5	81.8	84.2	12.8	112.8
BOILER CAPACITY, KG/HR	25,000			25,000			30,000
Number of Units	3			3			3

[a]As steam.
[b]Interchangeable with steam for hot water heating.
[c]Controlling condition for module size selected.
[d]Sunday conditions.

TABLE 4-6

MEATPACKING INDUSTRY
UTILITY SYSTEM DESIGN SUMMARY

	CASE A			CASE B			CASE C		
	Peak	Normal	Minimum	Peak	Normal	Minimum	Peak	Normal	Minimum
	Power Demand, (AC), kW								
	545	400	175	545	400	175	545	400	175
THERMAL DEMAND, GJ/HR									
As Steam	2.42	1.70	0.54	1.70	1.19	0.00	2.31	1.61	0.54
As Hot Water	3.07	2.15	0.00	3.84	2.69	0.54	3.07	2.15	0.00
TOTAL	5.49	3.85	0.54	5.54	3.88	0.54	5.38	3.76	0.54
FUEL CELL HEAT OUTPUT, GJ/HR									
As Steam	0.51	0.37	0.16	0.96	0.71	0.31	0	0	0
Low Level Waste Heat	1.11	0.81	0.36	2.00	1.47	0.64	0	0	0
TOTAL	1.62	1.18	0.52	2.96	2.18	0.95	0	0	0
DEFICIT THERMAL ENERGY FROM BOILERS,[a] GJ/HR	1.92[b]	1.33	0.38	0.75[b]	0.48	0.00	5.38[b]	3.76	0.54
BOILER CAPACITY, KG/HR	1.0			0.5			2.50		
Number of Units	1			1			1		
Hot Water Storage Capacity, m^3	380			380			0		
Storage Temperature, (°C)	85			94			--		

[a]As steam; average weekly waste heat from fuel cell sufficient for intermittent hot water demand with addition of thermal storage.

[b]Controlling condition for module size selection.

The general approach used in the trade-off analysis was to compare the capital cost of a given number of spare modules with the present worth of the annual power savings realized (reduced electricity cost--demand and usage charge) by installing the spares. The annual cost for standby power used in this analysis was based on the following industrial rate schedule obtained from Northeast Utilities Service Company.

Demand Charge	
First 50 kW	$234/mo
Next 150 kW	$3.17/mo-kW
Over 200 kW	$2.40/mo-kW

Energy Charge	
First [200 x (demand)]	2.99¢/kWh
Next [100 x (demand)]	2.55¢/kWh
Next [100 x (demand)]	2.42¢/kWh
All over [400 x (demand)]	2.28¢/kWh

For standby power, the utility would use 100% of the maximum demand that occurred during the previous 11 months to determine both the demand and energy charge.

The procedure used to estimate the annual cost savings for installation of an additional module is presented in Appendix H.

Based on this trade-off analysis, the following fuel cell configurations were used for the designs and detailed cost analysis:

	Fuel Cell Modules		
Industry/Cases	Operating	Spare	Total
Copper Refining			
Case D	10	1	11
Case E	10	2	12
Recycled Paperboard			
Case D	7	1	8
Case E	7	2	9
Meatpacking			
Case D	5	1	6
Case E	5	1	6

The results of the final cost analysis will show that total annual operating costs are not very sensitive to the number of spare fuel cells installed.

4.2.4 Equipment Sparing Philosophy

Since redundant fuel cell modules are required for the utility system designs, the issue arises as to how many of the fuel cell peripheral components should be spared. The philosophy applied in the designs was to spare only those components which were critical to the operation of the power section and therefore affect the overall system reliability. The major subsystem components included in this category are the fan or turbo-compressor used to compress cathode air and the heat exchangers required to remove heat from the power section coolant system. Each installed fuel cell module (including spares) was supplied with both of these components.

Other peripheral equipment that was not critical to the generation of electricity by the fuel cells was handled differently. For example, spare fuel cell modules were not supplied with cathode vent heat exchangers since a failure in these heat exchangers would not prevent operation of the fuel cell. It would, however, require bypassing the heat exchanger for a period of time and wasting of the heat in the vent streams. Power conditioning inverters were also not spared since interconnecting this equipment with other fuel cells is relatively simple.

Spare capacity was also supplied in the flue gas desulfurization system for the coal-fired boilers in the conventional design. The first design constraint in this area was the minimum practical size for scrubbers. Applying scrubbers to boilers with capacity less than 45,350 kg/h is economically impractical. Hence, with the boiler module sizes required for the study cases, the logical approach was to combine two boilers into one scrubber to obtain a practical scrubber size. To provide adequate spare capacity in the flue gas desulfurization system, two scrubbers were installed each capable of handling the flue gas from two of the three installed boilers. Hence, on this basis the flue gas handling equipment has 33% excess capacity at peak load requirements and more like 100% excess capacity based on normal operating requirements.

4.2.5 Heat Exchanger Design Approach

Heat exchangers are an important interface item in fuel cell cogeneration systems. For each of the industries studied, five to eight heat exchanger designs are required for each fuel cell case. Consequently, a standardized design approach was required.

The approach used in designing all the various heat exchangers for all five study cases (A to E) for each of the three industries was based on the use of computer programs supplied by B-Jac Computer Services, Inc. B-Jac Computer Services provides design, consulting and time-sharing services for the thermal rating, mechanical design and pricing of shell and tube heat exchangers using an extensive line of computer application programs. Applying these programs to design several typical and/or representative heat exchangers, made it possible to optimize a particular exchanger with the following priorities: (1) smallest shell diameter, (2) shortest

practical tube length, (3) maximum practical tube passes, and (4) closest practical baffle spacing, in strict accordance with given input design specifications. The specifications included such parameters as: required heat transfer duty, tube and shell side fluid flow rate, temperature and maximum allowable pressure drop, and both shell and tube physical size limitations. Once these so-called representative exchangers were computer-designed, it was possible to rate similar-type exchangers based on the detailed computer design data output. This data included such parameters as: shell and tube side fluid heat transfer coefficients, shell and tube side pressure drops, and overall logarithmic mean temperature difference (LMTD) correction factors. Therefore, using the actual duty and LMTD for a number of unrated exchangers in conjunction with the aforementioned data for a similar unit allowed us to specify the surface for all such exchangers.

4.2.6 Flue Gas Desulfurization System Design

Flue gas desulfurization systems were required in the designs with coal-fired boilers, which includes all the cases for copper and recycle paper. The design bases for all six cases are outlined in Table 4-7.

The air pollution control equipment includes both a venturi scrubber (ΔP = 2-3 kPa) for particulate control and a lime dual alkali system for sulfur dioxide control. The sulfur-related components of the system have been designed to achieve 90% SO_2 removal from 100% of the flue gas produced while the boilers are operating at maximum continuous load. The removal efficiency to achieve 520 g SO_x/GJ is 77%.

The system is also capable of a range of particulate removal efficiencies; this can be controlled by adjusting the pressure drop across the venturi. The actual efficiency will also depend on the stoker operation, the removal efficiency of the mechanical collectors*, and the particle size distribution of the fly ash. A 50% removal efficiency is required of the venturi to meet the 413 g/GJ standard, since mechanical collectors are installed upstream of the FGD system. This is a conservative design since the venturi scrubber could be designed to affect the total removal.

4.3 PROCESS PLANT UTILITY SYSTEMS

4.3.1 Fuel Cell Systems

4.3.1.1 System Description

Based on the plant characterization data presented in Section 7, power plant systems were designed to provide the following peak requirements for each industry application:

---

*The boilers are equipped with double mechanical collectors.

TABLE 4-7

FLUE GAS DESULFURIZATION DESIGN BASIS

CASE:	Copper			Paperboard		
	A&D	B&E	C	A&D	B&E	C
Boilers						
Number	3	3	3	3	3	3
Steam Production (10^3 kg/hr/ boiler)	29	25	36	25	25	29
Ash (kg/hr)[a]	780	660	961	839	839	992
Scrubbers						
Number	2	2	2	2	2	2
Flue Gas Flowrate (10^3 wet nm^3/hr)[b]	87.7	74.2	108.0	79.8	79.8	81.4
SO_x Removal (kg/hr)[b]						
- @ 77% Removal[c]	447	378	557	407	407	481
- @ 90% Removal	522	442	651	475	475	562
Particulate Removal (kg/hr)[b]						
- @ 50% Removal[d]	10	9	13	10	10	11
Chloride Removal (kg/hr)[b]						
- @ 100% Removal	19	16	23	9	9	10

Coal Analysis

Heating Value - 26,726 kJ/kg
Ash Content - 10%
Sulfur Content - 3.0%
Chlorine - 0.1%

Fly Ash Analysis (particle size distribution)

Particle Size Range (μ)	wt. %
<1	10-20
1-2	30-40
2-6	40
>6	10

[a]Includes bottom ash and fly ash from mechanical collector.
[b]Based on treatment of flue gas from 3 boilers, operating at max. cont. load.
[c]Equivalent to scrubber outlet SO_2 loading of 520 g/GJ.
[d]Equivalent to scrubber outlet ash loading of 43 g/GJ.

	Copper	Paperboard	Meatpacking
Thermal, GJ	248	163	5
Electric, kWh (AC)	21,120	5200	545

Waste heat from the fuel cell is recovered for process use or space heating. Other uses of waste heat were considered but were rejected. These are discussed in Section 4.3.1.2.

The fuel cell utility system flow schematics and mass balances are presented in Figures 4-3 to 4-5 and Tables 4-8 to 4-13. The mass balance flows are at peak conditions which determine the equipment design capacity.

The copper refinery plant utility system flow schematic (Figure 4-3) is described first since it is the most complex. Subsequently, the other industry flow schematics will be discussed by pointing out differences.

The copper refinery utility system schematic for Cases A and B is presented in Figure 4-3. Naphtha is withdrawn from storage tank TK-1 and fed to the fuel processor (reformer) by pump P-1. Dilution steam, generated from power section thermal energy in heat exchanger E-1, joins the naphtha feedline before entering the reformer. Depleted hydrogen from the anode is used to fuel the reformer and the flue gases (2) are combined with the cathode vent stream (3) before passing through a turboexpander (Cell A) to recover pressure energy which is used to compress combustion air for the fuel cell cathode and reformer. The vent streams were combined to obtain sufficient shaft power to match compression requirements without supplemental fuel injection. To match the compression horsepower with this arrangement requires an expander with an efficiency of 80%. With the type B fuel cell there is no turboexpander or E-4 heat exchanger and the combined vent stream passes directly to E-5 heat exchanger.

Heat in the exhaust gas from the expander is recovered by exchange first with boiler feedwater and next with tankhouse ventilating air. The major sink for this heat is the air to the tankhouse. Moisture condensed in E-5 is returned to the deaerator by pump P-3. The combined vent stream (6) is reheated in exchanger E-6 before releasing to the atmosphere. Power section thermal energy is used to generate low pressure steam in exchanger E-1. Primary fuel cell coolant (stream 8) is condensed in exchanger E-1 to generate low pressure [207-552 kPa (gage)] steam. The condensate from E-1 is sub-cooled in exchanger E-2 by exchange with boiler feedwater before returning to the power section intercell coolers. Two-thirds of the steam generated in E-1 is returned as dilution steam for the reformers. The remaining steam (stream 34) is available for plant use. Since there is a continuous use for process steam, no cooling towers are provided to remove heat from the power section coolant system. In the event that the steam demand drops below the quantity provided by the fuel cell, a pressure relief valve is provided. Therefore, during occasional periods of low steam demand, steam would be vented to atmosphere through stack U-7.

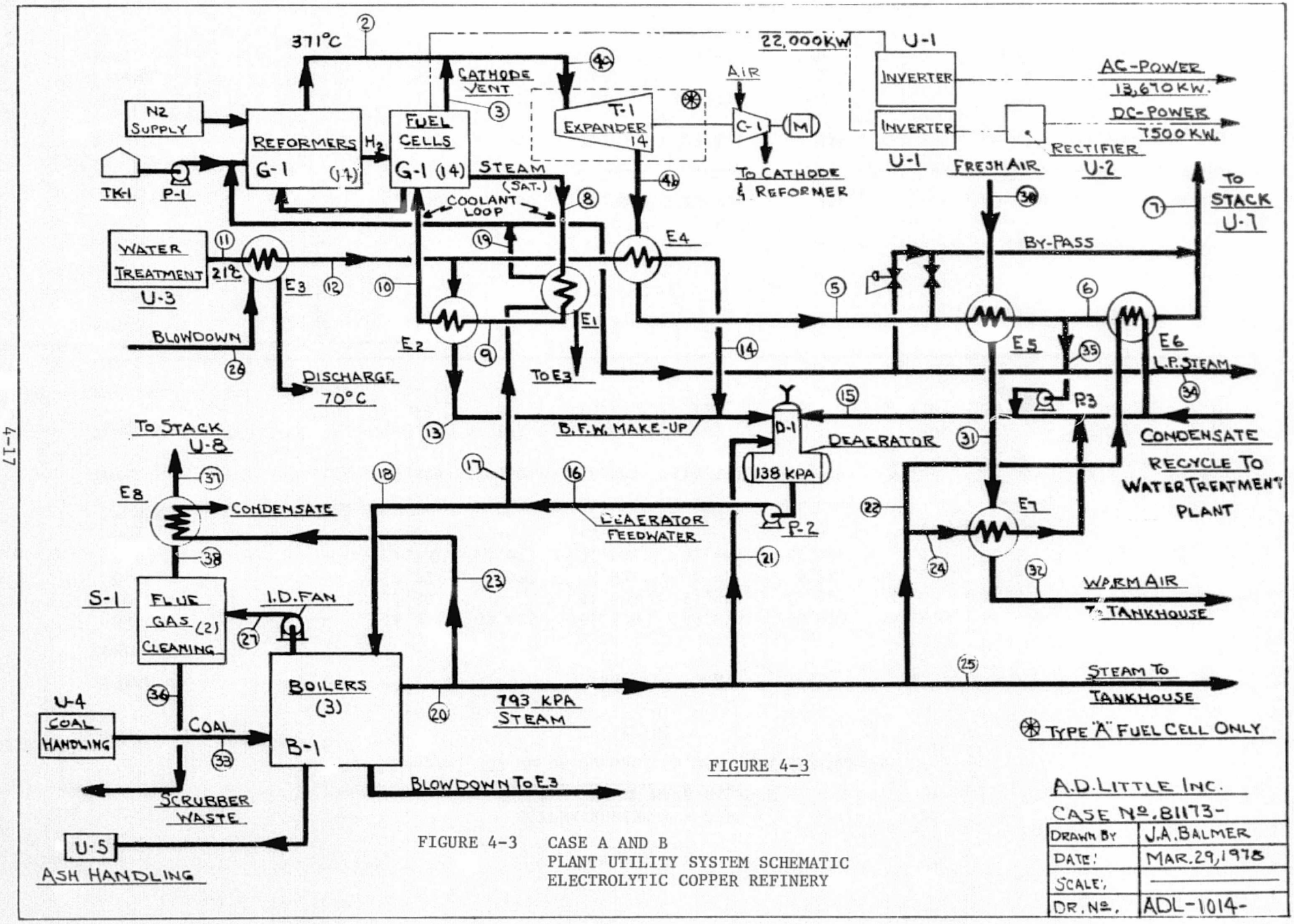

FIGURE 4-3

A.D. LITTLE INC.
CASE No. 81173-

DRAWN BY	J.A. BALMER
DATE:	MAR. 29, 1978
SCALE:	—
DR. No.	ADL-1014-

FIGURE 4-3 CASE A AND B
PLANT UTILITY SYSTEM SCHEMATIC
ELECTROLYTIC COPPER REFINERY

TABLE 4-8

COPPER REFINERY - CASE A
UTILITY SYSTEM MASS BALANCE

Basis: 22 Mw DC Output, 45,350 kg/h BFW Makeup

(kg/h)

STREAM NO.	1	2	3	4a	4b	5	6	7	8	9
COMPONENT										
N_2	--	16,244	52,426	68,670	68,670	68,670	68,670	68,670	--	--
CO_2	--	11,603	--	11,603	11,603	11,603	11,603	11,603	--	--
O_2	--	2,321	4,501	6,821	6,821	6,821	6,821	6,821	--	--
H_2O	--	9,731	21,677	31,408	31,408	31,408	6,227	6,227	42,702	42,702
SO_2	--	--	--	--	--	--	--	--	--	--
Naphtha	4,408	--	--	--	--	--	--	--	--	--
TOTAL	4,408	39,899	78,604	118,502	118,502	118,502	93,321	93,321	42,702	42,702
Temperature, °C	21	371	191	249	141	107	49	71	191	207
Pressure, kPa	690	379	379	379	131	124	110	103	1269	1241
Enthalpy, kJ/kg	46,034	--	--	--	--	--	--	--	2784	804

STREAM NO.	10	11	12	13	14	15	16	17	18	19
COMPONENT										
N_2	--	--	--	--	--	--	--	--	--	--
CO_2	--	--	--	--	--	--	--	--	--	--
O_2	--	--	--	--	--	--	--	--	--	--
H_2O	42,702	45,350	45,350	22,301	23,049	62,339	112,219	40,420	71,798	36,294
SO_2	--	--	--	--	--	--	--	--	--	--
TOTAL	42,702	45,350	45,350	22,301	23,049	62,339	112,219	40,420	71,798	36,294
Temperature, °C	163	21	46	100	100	93	109	109	109	163
Pressure, kPa	1241	241	207	172	172	276	138	138	138	662
Enthalpy, kJ/kg	686	88	193	418	418	390	456	456	456	2759

TABLE 4-8 Concluded

COPPER REFINERY - CASE A
UTILITY SYSTEM MASS BALANCE

STREAM NO.	20	21	22	23	24	25	26	27	28
COMPONENT								Flue Gas	Flue Gas
N_2	--	--	--	--	--	--	--	60,212	60,212
CO_2	---	--	--	--	--	--	--	14,990	14,990
O_2	---	--	--	--	--	--	--	4,606	4,606
H_2O	64,166	4,530	1,422	1,544	42,840	13,829	11,338	3,518	9,582
SO_2	--	--	--	--	--	--	--	419	42
TOTAL	64,166	4,530	1,422	1,544	42,840	13,829	11,338	83,745	89,432
Temperature, °C	170	170	170	170	170	170	170	204	54
Pressure, kPa	793	793	793	793	793	793	621	5	1
Enthalpy, kJ/kg	2,766	2,766	2,766	2,766	2,766	2,766	718	--	--

STREAM NO.	29	30	31	32	33	34	35	36	37
COMPONENT	Flue Gas				Coal			Scrubber Effluent	Ash
N_2	60,212	2,782,676	2,782,676	2,782,676	--	--	--	--	--
CO_2	14,990	--	--	--	--	--	--	--	--
O_2	4,606	845,324	845,324	845,324	--	--	--	--	--
H_2O	9,582	--	--	--	--	7,104	25,180	--	--
SO_2	42	--	--	--	--	--	--	--	--
Coal	--	--	--	--	6,846	--	--	--	--
TOTAL	89,432	3,628,000	3,628,000	3,628,000	6,846	7,104	25,180	1,375	669
Temperature, °C	77	-13	6	28	21	163	49	--	--
Pressure, kPa	101	--	101	101	101	662	101	--	--
Enthalpy, kJ/kg	--	--	--	--	26,726	2,759	205	--	--

TABLE 4-9

COPPER REFINERY - CASE B
UTILITY SYSTEM MASS BALANCE

Basis: 22 Mw DC Output, 45,350 kg/h BFW Makeup

(kg/h)

STREAM NO.	1	2	3	4	5	6	7	8	9	10
COMPONENT										
N_2	--	23,136	65,532	88,668	88,668	88,668	88,668	--	--	--
CO_2	--	14,891	--	14,891	14,891	14,891	14,891	--	--	--
O_2	--	3,305	5,626	8,931	8,931	8,931	8,931	--	--	--
H_2O	--	12,816	27,057	39,873	39,873	9,415	9,415	55,173	55,173	55,173
SO_2	--	--	--	--	--	--	--	--	--	--
Naphtha	5,372	--	--	--	--	--	--	--	--	--
TOTAL	5,372	54,148	98,215	152,363	152,363	121,905	121,905	55,173	55,173	55,173
Temperature, °C	21	371	163	237	216	49	71	163	163	135
Pressure, kPa	101	101	101	101	101	101	101	Sat.	Sat.	662
Enthalpy, kJ/kg	46,034	--	--	--	--	--	--	2,759	690	567

STREAM NO.	11	12	13	14	15	16	17	18	19	20
COMPONENT										
N_2	--	--	--	--	--	--	--	--	--	--
CO_2	--	--	--	--	--	--	--	--	--	--
O_2	--	--	--	--	--	--	--	--	50,239	39,817
H_2O	45,350	45,350	28,473	16,877	51,539	101,539	55,245	46,293	--	--
SO_2	--	--	--	--	--	--	--	--	--	--
TOTAL	45,350	45,350	28,473	16,877	51,539	101,539	55,245	46,293	50,239	39,817
Temperature, °C	21	46	100	100	93	109	109	109	135	Sat.
Pressure, kPa	241	207	172	172	276	138	138	138	310	793
Enthalpy, kJ/kg	88	193	418	418	390	456	456	456	2,724	2,766

TABLE 4-9 Concluded

COPPER REFINERY - CASE B
UTILITY SYSTEM MASS BALANCE

STREAM NO.	21	22	23	24	25	26	27	28	29
COMPONENT							Flue Gas		
N_2	--	--	--	--	--	--	37,365	37,365	37,365
CO_2	--	--	--	--	--	--	9,302	9,302	9,302
O_2	4,649	1,421	875	24,403	8,469	11,338	2,858	2,858	2,858
H_2O	--	--	--	--	--	--	2,183	5,946	5,946
SO_2	--	--	--	--	--	--	260	26	26
TOTAL	4,649	1,421	875	24,403	8,469	11,338	51,968	55,497	55,497
Temperature, °C	Sat.	Sat.	Sat.	Sat.	Sat.	Sat.	204	54	77
Pressure, kPa	793	793	793	793	793	793	5	1	atm
Enthalpy, kJ/kg	2,766	2,766	2,766	2,766	2,766	718	--	--	--

STREAM NO.	30	31	32	33	34	35	36	37
COMPONENT							Scrubber Effluent	Ash
N_2	2,782,676	2,782,676	2,782,676	--	--	--	--	--
CO_2	--	--	--	--	--	--	--	--
O_2	845,324	845,324	845,324	--	--	--	--	--
H_2O	--	--	--	--	16,761	30,458	--	--
SO_2	--	--	--	--	--	--	--	--
Coal	--	--	--	4,248	--	--	--	--
TOTAL	3,628,000	3,628,000	3,628,000	4,248	16,761	30,458	853	415
Temperature, °C	-13	16	28	21	135	49	--	--
Pressure, kPa	101	101	101	101	310	101	--	--
Enthalpy, kJ/kg	--	--	--	26,726	2,724	205	--	--

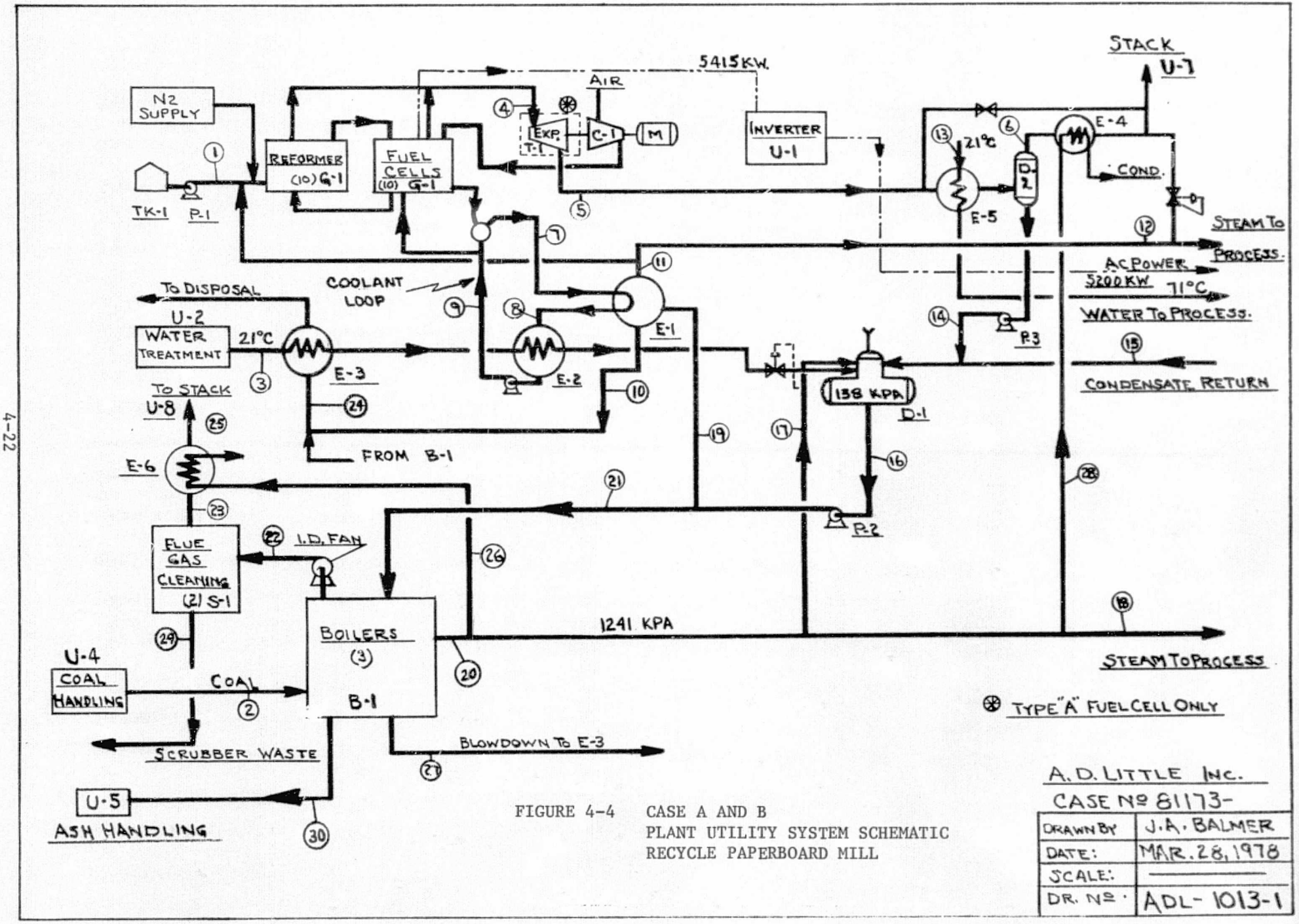

FIGURE 4-4 CASE A AND B
PLANT UTILITY SYSTEM SCHEMATIC
RECYCLE PAPERBOARD MILL

TABLE 4-10

RECYCLE PAPERBOARD MILL - CASE A
UTILITY SYSTEM MASS BALANCE

Basis: 5,415 Kw DC, 18,140 kg/h BFW Makeup

(kg/h)

STREAM NO.	1	2	3	4	5	6	7	8	9
COMPONENT	Naphtha	Coal	Makeup						
N_2	--	--	--	16,902	16,902	16,902	--	--	--
CO_2	--	--	--	2,856	2,856	2,856	--	--	--
O_2	--	--	--	1,679	1,679	1,679	--	--	--
H_2O	--	--	18,140	7,730	1,535	10,510	10,510	10,510	10,510
SO_2	--	--	--	--	--	--	--	--	--
TOTAL	1,086	6,492	18,140	29,167	22,972	31,947	10,510	10,510	10,510
Temperature, °C	21	21	21	252	152	49	191	189	163
Pressure, kPa	690	101	241	379	131	110	1,269	1,241	1,269
Enthalpy, kJ/kg	46,034	26,726	88	--	--	--	2,784	804	686

STREAM NO.	10	11	12	13	14	15	16	17	18
COMPONENT									
N_2	--	--	--	--	--	--	--	--	--
CO_2	--	--	--	--	--	--	--	--	--
O_2	--	--	--	--	--	--	--	--	--
H_2O	501	8,965	2,433	88,382	6,196	40,953	68,532	3,243	51,670
SO_2	--	--	--	--	--	--	--	--	--
TOTAL	501	8,965	2,433	88,382	6,196	40,953	68,532	3,243	51,670
Temperature, °C	163	163	163	21	49	93	109	189	189
Pressure, kPa	662	662	662	172	110	276	138	1,241	1,241
Enthalpy, kJ/kg	2,759	2,759	2,759	88	205	390	196	2,784	2,784

TABLE 4-10 Concluded

RECYCLE PAPERBOARD MILL - CASE A
UTILITY SYSTEM MASS BALANCE

STREAM NO.	19	20	21	22	23	24	25	26	27
COMPONENT									
N_2	--	--	--	57,089	57,089	--	57,089	--	--
CO_2	--	--	--	14,213	14,213	--	14,213	--	--
O_2	--	--	--	4,367	4,367	--	4,367	--	--
H_2O	9,466	56,254	59,066	7,353	9,085	3,314	9,085	1,065	2,813
SO_2	--	--	--	397	40	--	40	--	--
TOTAL	9,466	56,254	59,066	83,419	84,794	3,314	84,794	1,065	2,813
Temperature, °C	109	189	109	204	54	186	138	189	189
Pressure, kPa	662	1,241	662	106	102	1,151	101	1,241	1,241
Enthalpy, kJ/kg	456	2,784	456	--	--	788	--	2,784	804

STREAM NO.	28	29	30
COMPONENT		Scrubber Effluent	Ash
N_2	--	--	--
CO_2	--	--	--
O_2	--	--	--
H_2O	276	--	--
SO_2	--	--	--
TOTAL	276	1,304	635
Temperature, °C	189	--	--
Pressure, kPa	1,241	--	--
Enthalpy, kJ/kg	2,784	--	--

TABLE 4-11

RECYCLE PAPERBOARD MILL - CASE B
UTILITY SYSTEM MASS BALANCE

Basis: 5,415 kw DC, 18,140 kg/h BFW Makeup

(kg/h)

STREAM NO.	1	2	3	4	5	6	7	8	9
COMPONENT									
N_2	--	--	--	21,824	21,824	21,824	--	--	--
CO_2	--	--	--	3,665	3,665	3,665	--	--	--
O_2	--	--	--	2,198	2,198	2,198	--	--	--
H_2O	--	--	18,140	9,814	9,814	10,764	13,580	13,580	13,580
SO_2	--	--	--	--	--	--	--	--	--
Naphtha	1,322	--	--	--	--	--	--	--	--
Coal	--	6,229	--	--	--	--	--	--	--
TOTAL	1,322	6,229	18,140	37,501	37,501	38,451	13,580	13,580	13,580
Temperature, °C	21	21	21	238	238	63	163	162	135
Pressure, kPa	690	101	241	101	101	101	662	648	662
Enthalpy, kJ/kg	46,034	26,726	88	--	--	--	2,759	681	567

STREAM NO.	10	11	12	13	14	15	16	17	18
COMPONENT									
N_2	--	--	--	--	--	--	--	--	--
CO_2	--	--	--	--	--	--	--	--	--
O_2	--	--	--	--	--	--	--	--	--
H_2O	649	12,374	4,098	95,739	4,933	43,640	69,695	2,982	49,774
SO_2	--	--	--	--	--	--	--	--	--
TOTAL	649	12,374	4,098	95,739	4,933	43,640	69,695	2,982	49,774
Temperature, °C	135	135	135	21	63	93	109	189	189
Pressure, kPa	310	310	310	172	101	276	138	1,241	1,241
Enthalpy, kJ/kg	2,724	2,724	2,724	88	263	390	456	2,784	2,784

TABLE 4-11 Concluded

RECYCLE PAPERBOARD MILL - CASE B
UTILITY SYSTEM MASS BALANCE

STREAM NO.	19	20	21	22	23	24	25	26	27
COMPONENT									
N_2	--	--	--	54,776	54,776	--	54,776	--	--
CO_2	--	--	--	13,637	13,637	--	13,637	--	--
O_2	--	--	--	4,190	4,190	--	4,190	--	--
H_2O	13,023	53,973	56,672	3,199	8,717	3,348	8,717	799	2,699
SO_2	--	--	--	381	38	--	38	--	--
TOTAL	13,023	53,973	56,672	76,183	81,358	3,348	81,358	799	2,699
Temperature, °C	109	189	109	204	54	179	77	189	189
Pressure, kPa	310	1,241	138	106	102	1,062	101	1,241	1,241
Enthalpy, kJ/kg	456	2,784	456	--	--	758	--	2,784	804

STREAM NO.	28	29	30
COMPONENT		Scrubber Effluent	Ash
N_2	--	--	--
CO_2	--	--	--
O_2	--	--	--
H_2O	417	--	--
SO_2	--	--	--
TOTAL	417	1,252	609
Temperature, °C	189	--	--
Pressure, kPa	1,241	--	--
Enthalpy, kJ/kg	2,784	--	--

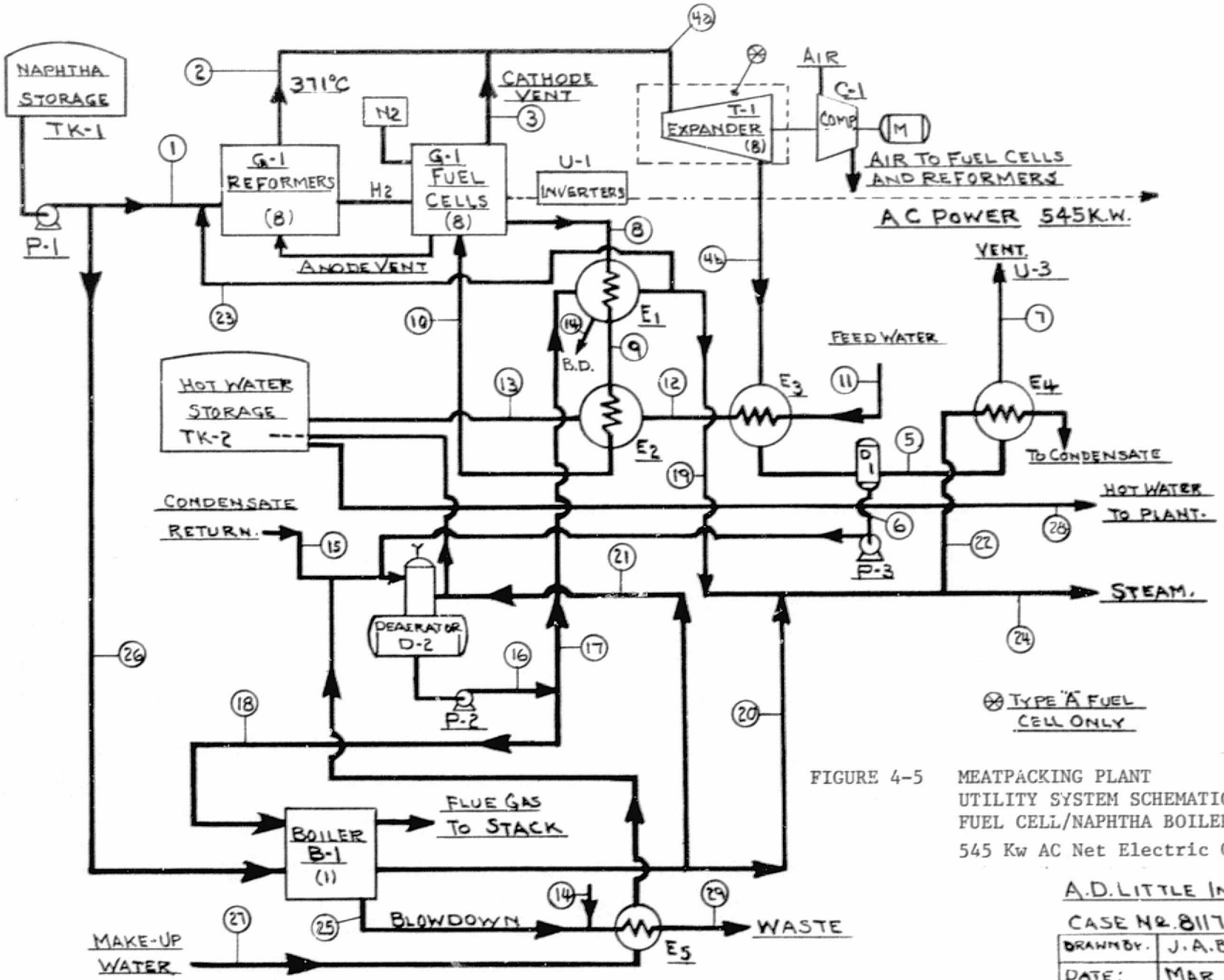

FIGURE 4-5 MEATPACKING PLANT
UTILITY SYSTEM SCHEMATIC
FUEL CELL/NAPHTHA BOILER
545 Kw AC Net Electric Output

A.D. LITTLE INC.
CASE NO. 81173-

DRAWN BY.	J. A. BALMER
DATE:	MAR. 18, 1978
SCALE:	—
DR. NO.	ADL-1015-

TABLE 4-12

MEATPACKING INDUSTRY - CASE A
UTILITY SYSTEM MASS BALANCE

Basis: 568 Kw DC, Peak Steam Load

(kg/h)

STREAM NO.	1	2	3	4a	4b	5	6	7	8	9
COMPONENT										
N_2	--	419	1,355	1,774	1,774	1,774	--	1,774	--	--
CO_2	--	300	--	300	300	300	--	300	--	--
O_2	--	60	116	176	176	176	--	176	--	--
H_2O	--	252	560	812	812	311	501	311	1,102	1,102
Naphtha	114	--	--	--	--	--	--	--	--	--
TOTAL	114	1,031	2,031	3,062	3,062	2,561	501	2,561	1,102	1,102
Temperature, °C	21	371	191	249	141	61	61	83	191	189
Pressure, kPa	414	379	379	379	131	110	110	101	1,269	1,241
Enthalpy, kJ/kg	46,034	--	--	--	--	--	253	--	2,784	804

STREAM NO.	10	11	12	13	14	15	16	17	18	19
COMPONENT										
N_2	--	--	--	--	--	--	--	--	--	--
CO_2	--	--	--	--	--	--	--	--	--	--
O_2	--	--	--	--	--	--	--	--	--	--
H_2O	1,102	6,773	6,773	6,773	362	181	2,690	1,272	1,416	225
Naphtha	--	--	--	--	--	--	--	--	--	--
TOTAL	1,102	6,773	6,773	6,773	362	181	2,690	1,272	1,416	225
Temperature, °C	163	28	81	85	163	93	109	109	109	163
Pressure, kPa	1,214	345	276	241	662	138	690	690	690	662
Enthalpy, kJ/kg	686	116	328	356	686	390	[illegible]	456	456	2,759

TABLE 4-12 Concluded

MEATPACKING INDUSTRY - CASE A
UTILITY SYSTEM MASS BALANCE

STREAM NO.	20	21	22	23	24	25	26	27	28	29
COMPONENT										
N_2	--	--	--	--	--	--	--	--	--	--
CO_2	--	--	--	--	--	--	--	--	--	--
O_2	--	--	--	--	--	--	--	--	--	--
H_2O	812	202	27	685	1,010	402	--	1,777	12,438	764
Naphtha	--	--	--	--	--	--	64	--	--	--
TOTAL	812	202	27	685	1,010	402	64	1,777	12,438	764
Temperature, °C	163	163	163	163	163	163	21	21	85	68
Pressure, kPa	662	662	662	662	662	662	414	345	174	662
Enthalpy, kJ/kg	2,759	2,759	2,759	2,759	2,759	688	46,034	88	356	286

TABLE 4-13

MEATPACKING INDUSTRY - CASE B
UTILITY SYSTEM MASS BALANCE

Basis: 568 Kw DC, Peak Thermal Load

(kg/h)

STREAM NO.	1	2	3	4	5	6	7	8	9	10
COMPONENT										
N_2	--	597	1,693	2,290	2,290	--	2,290	--	--	--
CO_2	--	385	--	385	385	--	385	--	--	--
O_2	--	85	145	230	230	--	230	--	--	--
H_2O	--	331	699	1,030	802	229	802	1,424	1,424	1,424
Naphtha	139	--	--	--	--	--	--	--	--	--
TOTAL	139	1,398	2,537	3,935	3,707	229	3,707	1,424	1,424	1,424
Temperature, °C	21	371	163	237	66	66	93	163	163	135
Pressure, kPa	414	101	101	101	101	101	101	662	648	621
Enthalpy, kJ/kg	46,034	--	--	--	--	277	--	2,759	683	567

STREAM NO.	11	12	13	14	15	16	17	18	19	20
COMPONENT										
N_2	--	--	--	--	--	--	--	--	--	--
CO_2	--	--	--	--	--	--	--	--	--	--
O_2	--	--	--	--	--	--	--	--	--	--
H_2O	6,003	6,003	6,003	634	224	3,329	1,907	1,422	405	649
Naphtha	--	--	--	--	--	--	--	--	--	--
TOTAL	6,003	6,003	6,003	634	224	3,329	1,907	1,422	405	649
Temperature, °C	28	78	85	135	93	109	109	109	135	135
Pressure, kPa	345	276	241	310	138	345	310	345	310	310
Enthalpy, kJ/kg	116	328	356	567	390	456	456	456	2,759	2,724

TABLE 4-13 Concluded

MEATPACKING INDUSTRY - CASE B
UTILITY SYSTEM MASS BALANCE

STREAM NO.	21	22	23	24	25	26	27	28	29
COMPONENT									
N_2	--	--	--	--	--	--	--	--	--
CO_2	--	--	--	--	--	--	--	--	--
O_2	--	--	--	--	--	--	--	--	--
H_2O	299	43	868	1,011	473	--	2,577	12,438	1,108
Naphtha	--	--	--	--	--	59	--	--	--
TOTAL	299	43	868	1,011	473	59	2,577	12,438	1,108
Temperature, °C	135	135	135	135	135	21	21	88	66
Pressure, kPa	310	310	310	310	310	414	345	172	310
Enthalpy, kJ/kg	2,724	2,724	2,724	2,724	567	46,034	88	367	274

Additional steam for plant use is generated by the steam boilers B-1. Coal is withdrawn from storage and delivered to the stoker-fired boilers. The boilers deliver saturated steam at 690 kPa (gage) which is the highest quality steam identified for process use in the copper refinery. Flue gas from the boilers is withdrawn by the induced draft fan and delivered to the flue gas cleaning system S-1. The dual alkali scrubbing system reduces the sulfur concentration to 520 g SO_2/GJ equivalent. The desulfurized flue gas is raised 22°C in exchanger E-6 before discharge to the atmosphere. Boiler blowdown water from E-1 and the boilers is cooled by exchange with treated boiler feedwater and discharged at about 66°C. Dewatered scrubber effluent and ash from the boilers is combined for disposal in a landfill.

All the DC electricity output of the fuel cells is converted to AC power in the inverters U-1. About one-third of the power for the plant is required in the form of DC, and processing requirements dictate that the DC current be controlled to within very narrow tolerance. Since a fuel cell produces constant voltage power, provisions must be made for controlling voltage in order to meet the DC power current requirements. There are at least three methods by which this can be accomplished including choppers, motor generator sets and variable voltage inverters with rectifiers. Having identified this as a problem, we did not do an extensive trade-off analysis on the various options. For this design we selected the voltage regulating inverter followed by an AC to DC rectifier. The inverter and rectifier efficiencies were assumed to be 96 and 98%, respectively.

The utility system flow schematic for the recycled paperboard mill is shown in Figure 4-4. This design is quite similar in most respects to that for the copper refinery. The major difference is that the heat available in the turboexpander exhaust is used to heat process water to 71°C. In addition, the steam from the boilers is generated at 1240 kPa, for use in back pressure turbines which drive the paper machines. All the electricity is supplied as alternating current.

Finally, Figure 4-5 shows the design for the meatpacking plant. This system is somewhat different than the previous ones in that a naphtha fueled fire-tube balancing boiler is used because a coal-fired boiler and SO_2 scrubbing system is impractical for the generating capacity (∿2268 kg/h) required. In addition hot water storage is also included in this design. Hot water is required for about 8 hours/day, five days/week at a rate greater than that instantaneously available from the fuel cell power plant. However, since the major electric load is refrigeration for cold storage, the fuel cell electrical output (and thermal) is relatively constant. Hence, a situation exists for shaving peak thermal demand by use of thermal storage.

4.3.1.2 Fuel Cell Thermal Energy Utilization

This section describes the options and the final design approach for utilization of fuel cell thermal energy. Utilization of byproduct thermal

energy generally requires transferring heat between two streams at different temperatures. Indirect heat exchange in tubular heat exchangers is most often used for this purpose. All of the final designs incorporate shell and tube heat exchangers. However, direct contact heat exchange was also considered as a means of reducing system costs, since available pressure drop and temperature differences were relatively small in some instances. The conclusion based on a rough trade-off analysis (Appendix A) was that direct contact exchange hardware cost might be 20% less, but was not considered further because some of this capital cost savings would be offset by higher operating costs, which were not evaluated.

Copper Refinery

The relatively high grade thermal energy available from the power section was used to generate steam in a kettle reboiler; two-thirds of which is used in the naphtha reformer and the net production for plant use. A secondary steam generator was utilized to insure high water purity in the primary cooler circuit. The generating pressure for steam was set by the reformer requirements and is 552 kPa (gage) and 207 kPa (gage) for Type A and Type B fuel cells, respectively. Various uses exist for low pressure steam in the copper refinery including electrolyte heat and space heating in fall and winter.

Two options were considered for use of the low grade thermal energy available in the reformer and cathode exhaust streams. These options included heating of the electrolyte used in the electrolytic cells and heating of the tankhouse ventilation air in the wintertime; the latter being a major steam user in the wintertime. The first choice was to use this heat to maintain temperature of the electrolyte. However, it was eventually concluded that the temperature level (~71°C) of the electrolytic bath and the quality of the heat available in the vent streams were incompatible. This is due to the shape of the cooling curve of the combined reformer and cathode vent streams as shown in Figure 4-6. It is apparent that most of the heat available in the combined vent streams is latent heat associated with condensing moisture. The dewpoint of this stream is approximately 74-77°C depending on the exact pressure level in the exchanger. Since the minimum temperature of the electrolyte is 64°C, the temperature difference available for heat transfer is very small and therefore the surface requirements would be very great. The dotted line shown on Figure 4-6 is the temperature profile of the electrolyte. As can be seen, the pinch point temperature difference is approximately 5.5°C.

The alternative approach was to heat the tankhouse ventilating air in the wintertime when ambient air temperature is 5-10°C below freezing. Three and one-half million kg/h of air are passed through the tankhouse and the heating requirement for this air represents a large steam demand in the wintertime. By using air as the heat sink, the pinch point temperature difference was increased to 19°C, albeit with an offsetting reduction in heat transfer coefficient.

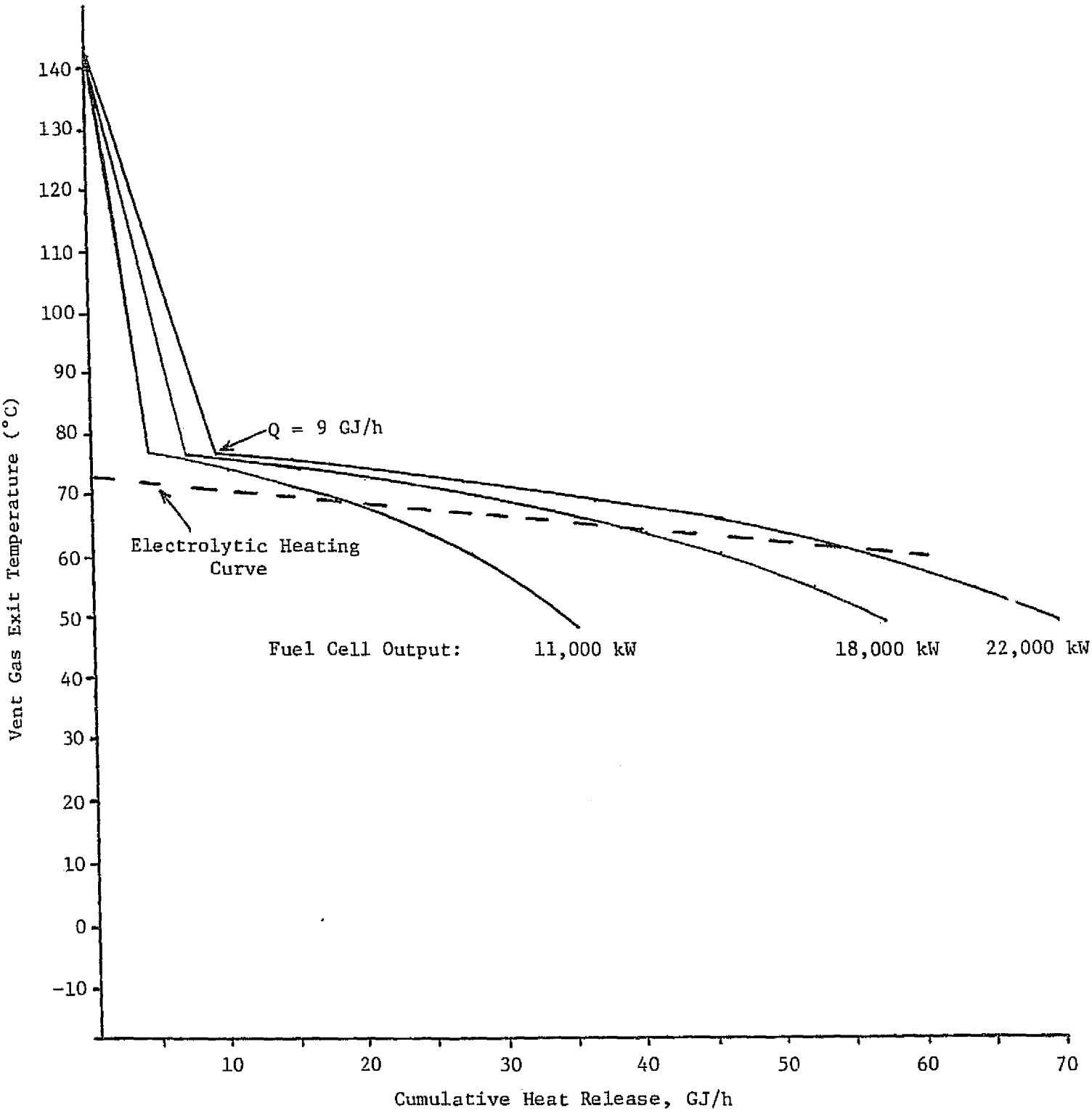

FIGURE 4-6

HEAT RELEASE CURVE
TYPE A FUEL CELL - VENT GAS

Consideration was given to using the heat pump to upgrade the low level heat to a level suitable for electrolyte. This option was assessed by direct comparison with the heating of ventilation air. A comparison of total fuel requirements was made for ventilation air and electrolyte heating with and without the heat pump. The annual energy consumed for each case based on a Type B cell is shown below:

	F/C Thermal Energy* used for Air Heating (no heating pump)	F/C Waste Heat* used for Electrolyte Heating (with heating pump)
Boiler Fuel, 10^3 GJ/yr	365	226
Fuel Cell Naphtha, 10^3 GJ/yr	1629	1850
Total Energy	1994	2076

*Low grade heat.

Because the electricity demand increased for the heat pump case, the total energy consumption with the heat pump is higher than for the air heating case, even allowing for the additional waste heat available from the fuel cells. This analysis assumed a coefficient of performance for the heat pump of 4.5. Hence, the conclusion is that there is no offsetting fuel savings to justify the significant capital investment in additional fuel cells and the heat pump required. Consequently, the heat pump was dropped from consideration.

Since the requirement for heating the tankhouse ventilating air is seasonal, the utilization of low-grade waste heat drops to zero in the summertime. The actual utilization of waste heat compared to the total potential was determined to be 64% and 59% for Cases A and B, respectively.

The design of the ventilating air exchanger E-5 was optimized using standard engineering procedures. The fuel cell vent gas was to be cooled to 49°F against incoming fresh air at an ambient design temperature of -13°C. Since the vent gas contained significant amounts of water, it was placed on the tube side with the incoming air on the shell side. A two pass tube-side configuration was selected to obtain a compact design. Because of the imbalance between the mass of the vent gas (113,375 kg/h) and the incoming air (3,628,000 kg/h), only a portion of the air was heated (∿907,000 kg/h) with adiabatic mixing of the two streams after the exchanger to obtain the desired temperature.

Although the vent gas temperature was above its dewpoint temperature at the inlet, the tube wall temperature was assumed to be at the dewpoint temperature throughout the exchanger and hence a condensing heat transfer coefficient was assumed throughout on the tube side. A gas film heat

transfer coefficient was used on the shell side, with the effective coefficient increased by using extended surface.

The heat exchanger was broken into two sections for calculation of a weighted LMTD. A desuperheating section brought the vent gas from its initial temperature to its dew point, and a condensing section cooled the gas from its initial dew point to the outlet temperature. Separate LMTD's were calculated for each section and weighted by duty.

A scale drawing (Figure E-4) of the E-5 heat exchanger is provided in Appendix E. This shows the mechanical arrangement of equipment around E-5. In the summertime air is passed through E-5 to condense moisture in the vent streams. The air exiting E-5 is diverted through a bypass and not sent into the tankhouse.

Recycled Paperboard Mill

Power section waste heat was utilized the same way in these system designs as described for the copper refining power plant. In fact, we believe a design of the power section heat recovery section could be standardized, hence the reformer operating pressure would most likely dictate the steam pressure required.

For this application the waste heat available in the vent streams was utilized to heat process water from 21°C to 71°C. This was accomplished in a conventional shell and tube heat exchanger. Since the hot water temperature does not exceed the dew point temperature (71-81°C) of the vent stream, a single shell can be used. The pinch-point temperature differences for this exchanger are -2°C and -1°C for Cases A and B, respectively. To calculate surface requirements the heat exchanger was divided into two regions: condensing and non-condensing.

Meatpacking Plant

Power section waste heat was handled in the same manner as for the other industries. The waste heat available in the vent streams is utilized to heat hot water which is required for washing down the slaughterhouse and other intermittent uses. Since the demand for hot water is quite variable and the fuel cells electrical load factor is relatively constant, thermal storage capacity was provided. This allows storing heat available from this fuel cell during the evening and on weekends for use during regular operating periods.

The philosophy of design was to satisfy the plant demand for hot water using minimal steam. Water preheated to 28°C in existing ammonia condensers is heated to 81°C by exchange with the vent stream in exchanger E-3. The water leaving E-3 is heated to 85°C in the coolant loop subcooler, E-2. The flow rate through the waste heat recovery system was set to achieve an 85°C outlet temperature. The temperature differences at the pinch-point in exchanger E-3 are -7°C and 7°C for Cases A and B, respectively. The hot-water storage tank was sized for 100,000 gallons which is

in excess of 2-days' worth of thermal output from the fuel cells. The operating temperature of the thermal storage tank is 85°C. For Case B all of the hot water demand for the plant is applied from fuel cell waste heat. For Case A a small addition of steam is required to balance the demand.

In the recycle paperboard mill and the meatpacking applications, the utilization of available fuel cell waste heat above 49°C is nearly 100%.

4.3.1.3 Plant Layout

Consideration was given to locating the fuel cell modules in relationship to process requirements for electricity and heat. The final location of the fuel cell modules is shown in Figures E-1 to E-3 located in Appendix E. In the copper refinery the fuel cell power systems were located next to the tankhouse, since all the DC power and a majority of the waste heat is utilized in the tankhouse. In the other process plants the fuel cell power plant was located in available space near the boiler plant.

The general arrangement of fuel cells and peripheral equipment for each industry is shown in Figures E-5 to E-8 (Appendix E).

For the copper refinery, the fuel cells have been arranged in three groups of four and one group of two. The arrangement of the equipment within each group is shown in Figures E-5 and E-6 for the two types of groupings specified. The equipment numbers refer to items listed in the major equipment list discussed in Section 4.3.2.3. The air heaters E-5 and E-7 are located next to the tankhouse wall and the vent streams from the fuel cell modules are headed together after the turboexpanders and then distributed to the exchangers.

For the other two industrial applications, a symmetrical arrangement of fuel cells and equipment was specified. (See Figures E-7 and E-8 in Appendix E.)

4.3.1.4 Major Equipment Summaries

Equipment summaries for major components are presented in Tables 4-14 to 4-16 for each industrial application. The number of components installed and key size parameter are shown for Cases A and B. For Cases D and E, the quantity of certain items decreases as noted. These tables also provide information on the surface and type of heat exchangers used. A summary of design details for each of the heat exchangers is provided in Appendix E. The information summarized in these tables was used as a basis for obtaining prices from equipment suppliers.

TABLE 4-14

COPPER REFINING INDUSTRY
UTILITY SYSTEM EQUIPMENT LIST

Item No.	Description	Quantity	Size or Capacity Case A	Size or Capacity Case B	Comment
G-1A-N	Fuel Processor & Power Section	14[a]	2200 kw	2200 kw	--
B-1A-C	Steam Generator & Combustion Equipment	3	29,478 kg/h	24,943 kg/h	--
C-1A-N	Air Compressor (Type A); Blower	14[a]	6,903 Nm^3/h	8,914 Nm^3/h	CR = 3.75 (A); ΔP = 4 kPa (B)
C-2A-N	Ventilation Air Blower	10	71,734 Nm^3/h	108,165 Nm^3/h	--
D-1	Deaerator	1	17 m^3	11 m^3	--
E-1A-N	Cell Coolant Condenser	14[a]	58 m^2	79 m^2	Kettle
E-2A-N	Cell Coolant Subcooler	14[a]	2 m^2	3 m^2	Shell/tube
E-3	Blowdown Exchanger	1	19 m^2	19 m^2	Shell/tube
E-4-1A-J	1st Vent Cooler	10 +	10 m^2	38 m^2	Shell/tube (A), Cross flow (B)
E-4-2A-J	2nd Vent Cooler	10	43 m^2	--	Shell/tube
E-5A-J	Ventilation Air Heater	10	1,384 m^2	1,560 m^2	Cross flow
E-6A-J	Vent Reheater	10	13 m^2	17 m^2	Cross flow
E-7A-J	Air Trim Heater	10	560 m^2	484 m^2	Cross flow
E-8	Flue Gas Reheater	1	412 m^2	348 m^2	Cross flow
P-1A&B	Naphtha Fuel Pump	2	8 m^3/h	8 m^3/h	ΔP = 690 kPa (A); ΔP = 278 kPa (B)
P-2A-C	BFW Pump	3	72 m^3/h	46 m^3/h	ΔP = 724 kPa
P-3A-F	Vent Condensate Pump	6	3 m^3/h	3 m^3/h	ΔP · 172 kPa
S-1A&B	FGD Scrubber (Venturi/Spray Tower)	2	88,660 Nm^3/h	514,228 Nm^3/h	--

[a] 11 required for Cases D and E.

TABLE 4-14 Concluded

COPPER REFINING INDUSTRY
UTILITY SYSTEM EQUIPMENT LIST

Item No.	Description	Quantity	Size or Capacity Case A	Size or Capacity Case B	Comments
T-1A-N	Vent Turboexpander	14[a]	418 kw	--	ΔP = 245 kPa
TK-1	Naphtha Storage Tank (Floating Roof)	2	11m ϕ x 11m	12m ϕ x 12m	A - 994 m^3 B - 1,272 m^3
U-1	Inverter	10	2200 KWAC	2200 KWAC	3ϕ, 13.8 KVAC
U-3	Water Treatment System	1	1137 m^3/d	1137 m^3/d	--
U-4	Coal Storage & Handling	1	--	--	--
U-5	Ash Handling	1	--	--	--
U-6	Inerting Gas Storage	1	111 m^3	111 m^3	Liquid N_2
U-7	Vent Stacks	10	--	--	--
U-8	Boiler Stacks	1	--	--	--

[a] 11 required for Case D.

Arthur D Little, Inc

TABLE 4-15

RECYCLE PAPERBOARD INDUSTRY
UTILITY SYSTEM EQUIPMENT LIST

Item No.	Description	Quantity	Size or Capacity Case A	Size or Capacity Case B	Comments
G-1A-J	Fuel Processor & Power Section	10[a]	775 kw	775 kw	--
B-1A-C	Steam Generator & Combustion	3	24,943 kg/h	29,478 kg/h	--
C-1A-J	Air Compressor (Type A); Blower (Type B)	10[a]	2,434 Nm^3/h	3,143 Nm^3/h	CR = 3.75 (A); ΔP = 5 kPa (B)
D-1	Deaerator	1	17 m^3	17 m^3	--
D-2A&B	Vent K.O. Drum	2	.8m ϕ x 2m	.8m ϕ x 2m	--
E-1A-J	Cell Coolant Condenser	10[a]	21 m^2	28 m^2	Kettle
E-2A-J	Cell Coolant Subcooler	10[a]	.6 m^2	.8 m^2	Double pipe
E-3	Blow Down Exchanger	1	11 m^2	11 m^2	Shell/tube
E-4	Vent Reheater	1	30 m^2	50 m^2	Cross flow
E-5A&B	Hot Water Heater	2	338 m^2	245 m^2	Shell/tube
E-6	Flue Gas Reheater	1	294 m^2	294 m^2	Cross flow
P-1A&B	Naphtha Fuel Pump	2	2 m^3/h	2 m^3/h	--
P-2A-C	BFW Pump	3	73 m^3/h	73 m^3/h	--
P-3A&B	Vent Condensate Pump	2	7 m^3/h	7 m^3/h	--
S-1A&B	FGD Scrubber (Venturi/Spray Tower	2	51,584 Nm^3/h	51,584 Nm^3/h	--
T-1A-J	Vent Turboexpander	10[b]	37,076 Nm^3/h	--	ΔP = 245 kPa
TK-1	Naphtha Storage Tank	1	8.5m ϕ x 6m	9m ϕ x 7m	350 m^3(A), 445 m^3(B)
U-1	Inverter	7	DC/775 KWAC	DC/775 KWAC	3ϕ, 600 VAC
U-2	Water Treatment System	1	474 m^3/d	474 m^3/d	--

[a] 8 required for Case D; 9 required for Case E.

[b] 8 required for Case D.

Continued ...

Arthur D Little Inc

TABLE 4-15 Concluded

RECYCLE PAPERBOARD INDUSTRY
UTILITY SYSTEM EQUIPMENT LIST

Item No.	Description	Quantity	Size or Capacity Case A	Size or Capacity Case B	Comments
U-3	Coal Storage	1	6350 tonnes	6350 tonnes	--
U-4	Coal Handling	1	91 tonnes/hr	91 tonnes/hr	--
U-5	Ash Handling Facilities	1	4 tonnes/hr	4 tonnes/hr	--
U-6	Inerting Gas Storage	1	3m ϕ x 4m	3m ϕ x 4m	27 m^3 liquid N_2
U-7	Vent Stack	1	--	--	--
U-8	Boiler Stack	1	--	--	--

TABLE 4-16

MEATPACKING INDUSTRY
UTILITY SYSTEM EQUIPMENT LIST

Item No.	Description	Quantity	Size or Capacity Case A	Size or Capacity Case B	Comments
G-1A-H	Fuel Processor & Power Section	8[a/]	114 kw	114 kw	---
B-1	Naphtha-Fired Steam Boiler	1	1134 kg/h	567 kg/h	---
C-1A-H	Air Compressor (Case A); Blower (Case B)	8[a/]	355 Nm^3/h	443 Nm^3/h	CR = 3.75 (Case A); ΔP = 5 kPa (Case B)
D-1A&B	Vent K.O. Drum	2	.5m ϕ x 2m	.5m ϕ x 2m	--
D-2	Deaerator	1	.7 m^3	.7 m^3	--
E-1A-H	Cell Coolant Condenser	8[a/]	2 m^2	3 m^2	Kettle reboiler
E-2A-H	Cell Coolant Subcooler	8[a/]	.09 m^2	.2 m^2	Shell/Tube
E-3A&B	Vent Gas Cooler	2	80 m^2	21 m^2	Shell/Tube
E-4	Vent Gas Reheater	1	5 m^2	13 m^2	Cross flow air heater
E-5	Blowdown Exchanger	1	1 m^2	2 m^2	Shell/Tube
P-1A&B	Naphtha Fuel Pump	2	.2 m^3/h	.2 m^3/h	--
P-2A&B	BFW Pump	2	3 m^3/h	3 m^3/h	--
T-1A-H	Turboexpander (Case A only)	8[b/]	5642 Nm^3/h	--	ΔP = 245 kPa
TK-1	Naphtha Storage Tank	1	38 m^3	38 m^3	Buried tank
TK-2	Hot Water Storage Tank	1	7m ϕ x 7m	8m ϕ x 8m	Insulated
U-1A-E	Inverters	5	775 kw	775 kw	3ϕ, 230 VAC
U-2	N_2 Storage Area	1	5 m^3	5 m^3	Cryogenic N_2 storage tanks
U-3	Vent Stack	1	--	--	--
U-4	Boiler Stack	1	--	--	--

[a/] 6 required for Cases D and E.

[b/] 6 required for Case D.

4.3.2 Conventional System

The flow schematic for the conventional plant utility systems applicable to the three industries are shown in Figures 4-7 to 4-9. The designs for the copper refinery and recycle paper mill are quite similar whereas for meatpacking a different fuel and boiler type are used. For copper, coal is reclaimed from storage and sent to three stoker-fired boilers. Each boiler has a capacity of 36,280 kg/h of saturated steam. The boilers deliver saturated steam at 690 kPa (gage) to the mains. Flue gas from the boilers is exhausted through fan C-1 to a double-alkali flue gas desulfurization system. The scrubbed flue gas is reheated 4°C in the exchanger heat tube to prevent a plume upon release to the atmosphere. Dewatered scrubber waste and boiler bottom ash are combined for landfill disposal. Purchased power at transmission voltage is stepped down through transformer U-5 to 13.8 kv. A portion of the AC is rectified to produce DC required by the electrolytic cells. Boiler blowdown is cooled against boiler feedwater makeup before being discharged to sewer.

The only process difference between the copper and paper designs is the inclusion of the steam heated air heaters in the copper refinery design. This was done to reflect the net cost difference between heating the ventilation air with steam and using fuel cell waste heat.

The conventional utility plant design for the meatpacking application is shown in Figure 4-9. The peak steam generating capacity required for this application was only 2,358 kg/h. For this capacity region, the unit cost for coal-fired boiler and FGD systems is very high. Consequently, a fire-tube package designed for distillate fuels was provided. Since these boilers are very reliable, only one boiler was installed. No FGD system is required and BFW treatment is accomplished by injection of chemicals directly into the steam drum.

Process conditions and flow rates for the streams designated in drawing Figures 4-7 to 4-9 are summarized in Tables 4-17 to 4-19. Material balances are based on peak electrical and thermal load conditions as indicated at the top of each table.

4.3.2.2 Plant Layout

The location of the coal-fired boiler plant is shown in Figures E-1 to E-3 in Appendix E. The coal-fired boiler plants are located on the sites to allow room for a coal storage area and because of proximity to existing rail lines. The distance to point of use for the steam is approximately the same as for the existing boiler plant locations in the copper refinery and recycle paper mill. The locations also reduce the interconnection distance between the boilers and the fuel cell power systems. In the meatpacking plant the boiler is located at the position of the existing boiler plant.

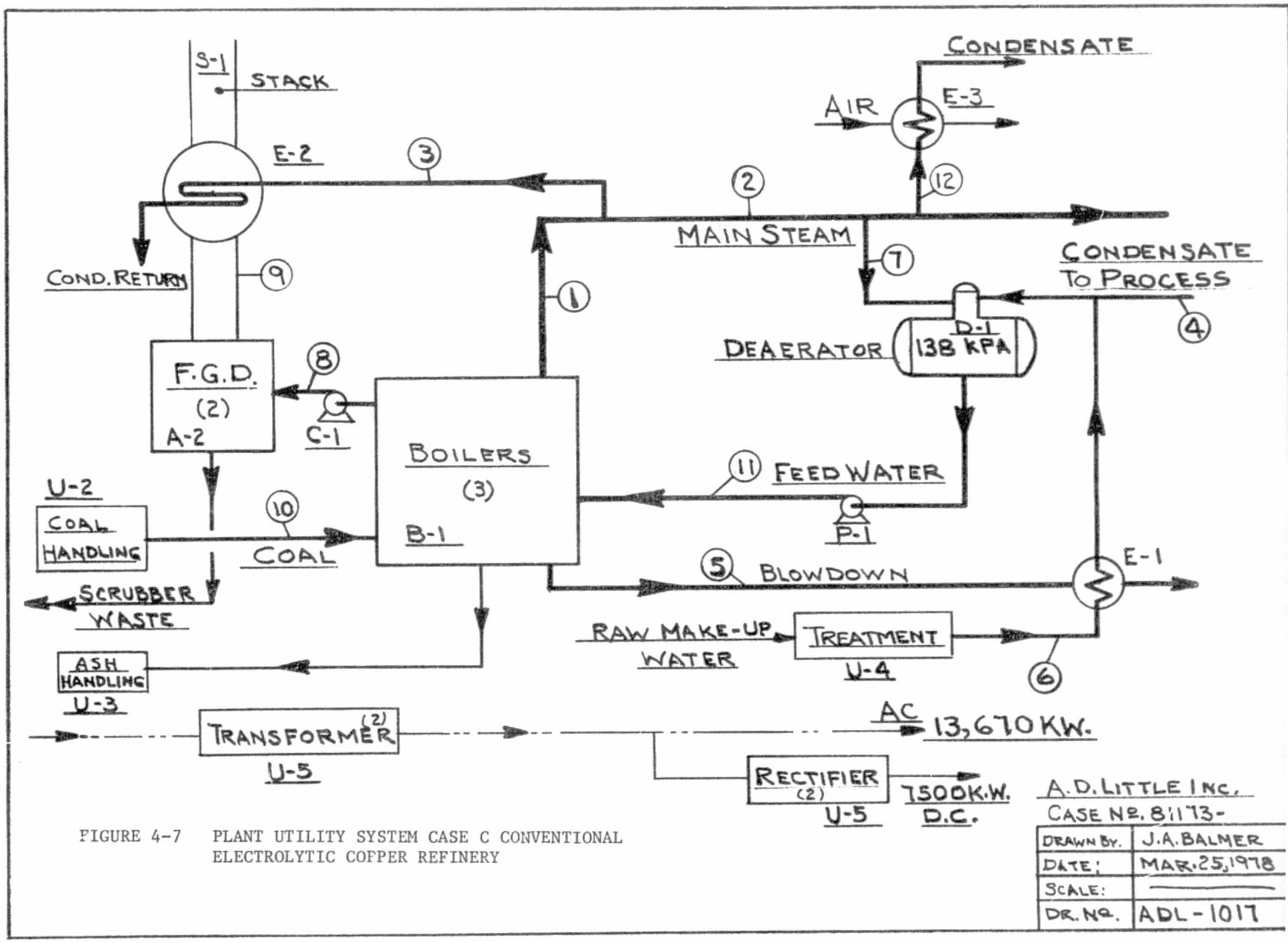

FIGURE 4-7 PLANT UTILITY SYSTEM CASE C CONVENTIONAL ELECTROLYTIC COPPER REFINERY

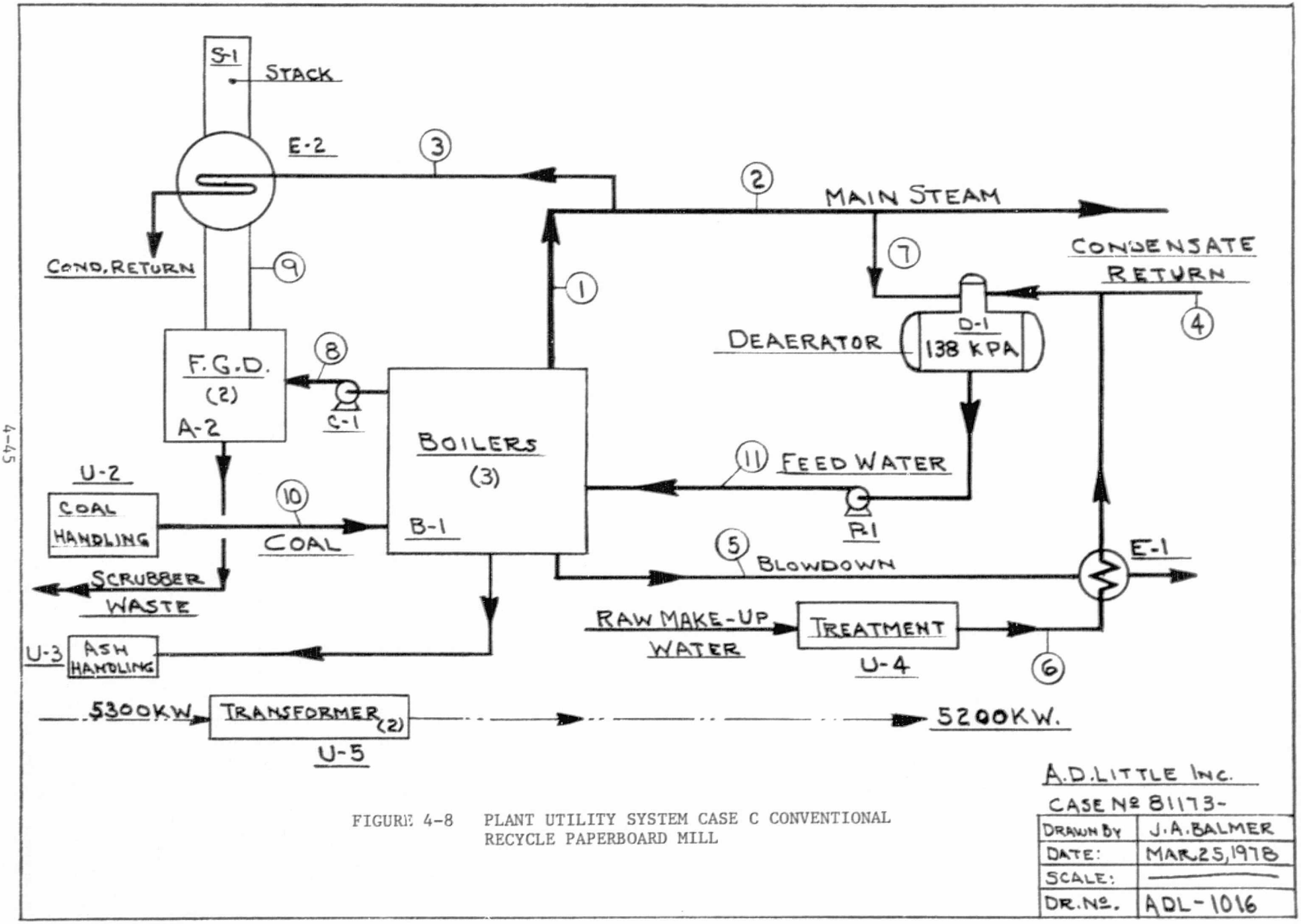

FIGURE 4-8 PLANT UTILITY SYSTEM CASE C CONVENTIONAL RECYCLE PAPERBOARD MILL

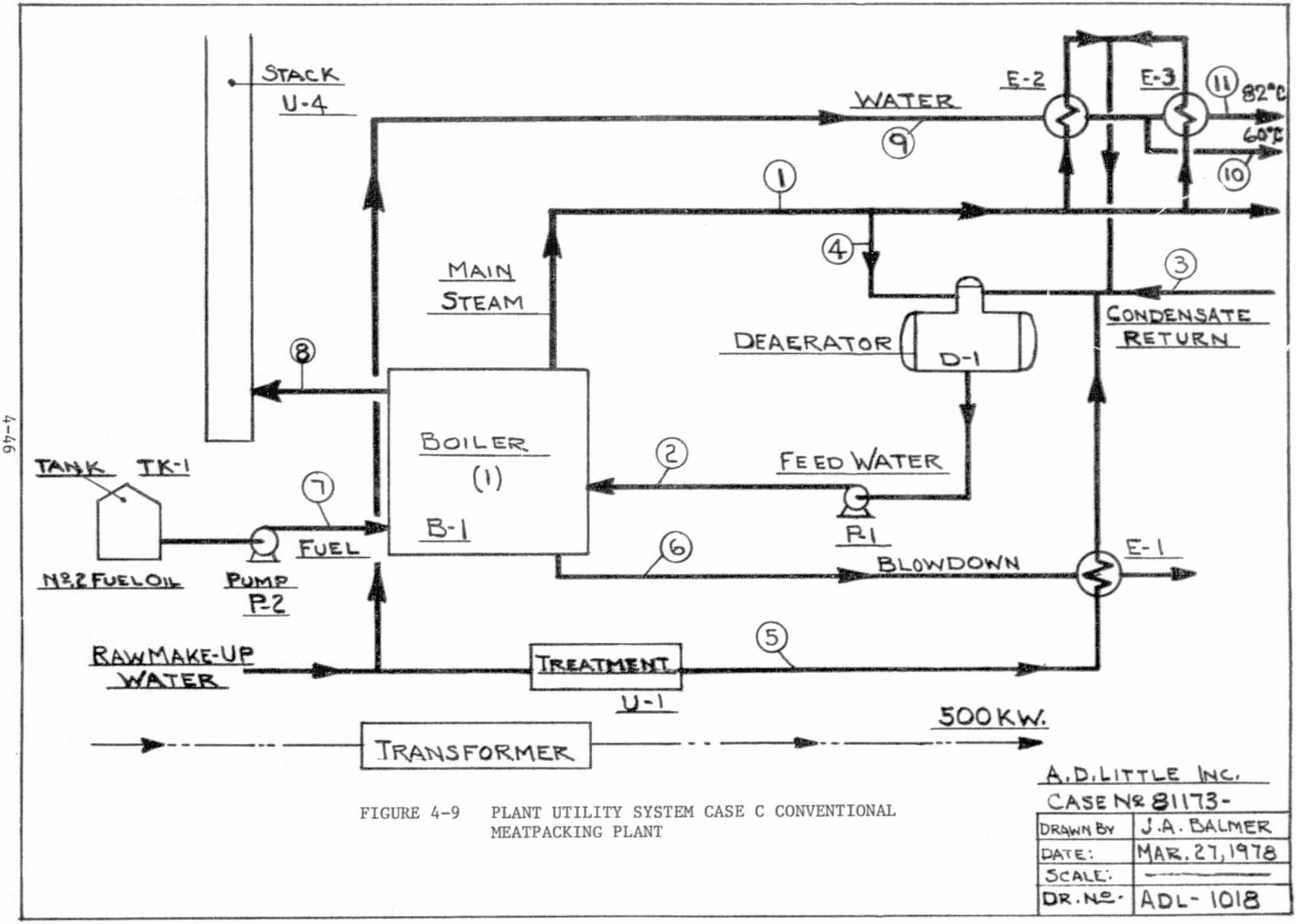

FIGURE 4-9 PLANT UTILITY SYSTEM CASE C CONVENTIONAL MEATPACKING PLANT

TABLE 4-17

COPPER REFINERY - CASE C
UTILITY SYSTEM MASS BALANCE

Basis: 245 GJ/h, 45,350 kg/h BFW Makeup

(kg/h)

STREAM NO.	1	2	3	4	5	6	7	8	9
COMPONENT									
N_2	--	--	--	--	--	--	--	99,093	99,093
CO_2	--	--	--	--	--	--	--	24,741	24,741
O_2	--	--	--	--	--	--	--	7,642	7,642
H_2O	103,738	102,060	1,678	65,259	11,337	43,921	5,896	5,699	15,858
SO_2	--	--	--	--	--	--	--	676	68
TOTAL	103,738	102,060	1,678	65,259	11,337	43,921	5,896	137,851	147,402
Temperature, °C	170	170	170	93	170	21	170	205	54
Pressure, kPa	793	793	793	207	793	276	793	101	101
Enthalpy, kJ/kg	2,766	2,766	2,766	390	718	88	2,766	--	--

STREAM NO.	10	11	12	13	14	15
COMPONENT				Scrubber Effluent	Ash	Ash
N_2	--	--	--	--	--	2,782,676
CO_2	--	--	--	--	--	--
O_2	--	--	--	--	--	845,324
H_2O	--	115,076	74,125	--	--	--
SO_2	--	--	--	--	--	--
Coal	11,269	--	--	--	--	--
TOTAL	11,269	115,076	74,125	2,264	1,101	3,628,000
Temperature, °C	21	109	170	--	--	-13
Pressure, kPa	101	793	793	--	--	101
Enthalpy, kJ/kg	26,726	456	2,766	--	--	--

TABLE 4-18

RECYCLE PAPERBOARD MILL - CASE C
UTILITY SYSTEM MASS BALANCE

Basis: 163 GJ/h, 27,210 kg/h BFW Makeup

(kg/h)

STREAM NO.	1	2	3	4	5	6	7	8	9
COMPONENT									
N_2	--	--	--	--	--	--	--	64,306	64,306
CO_2	--	--	--	--	--	--	--	16,056	16,056
O_2	--	--	--	--	--	--	--	4,908	4,908
H_2O	68,061	66,887	1,175	39,754	3,401	27,210	4,499	3,717	9,446
SO_2	--	--	--	--	--	--	--	329	33
TOTAL	68,061	66,887	1,175	39,754	3,401	27,210	4,499	89,316	94,749
Temperature, °C	189	189	189	93	189	21	189	204	54
Pressure, kPa	1,241	1,241	1,241	276	1,241	207	1,241	--	0.75
Enthalpy, kJ/kg	2,782	2,782	2,782	390	804	88	2,782	--	--

STREAM NO.	10	11	12	13
COMPONENT			Scrubber Effluent	Ash
N_2	--	--	--	--
CO_2	--	--	--	--
O_2	--	--	--	--
H_2O	--	71,463	--	--
SO_2	--	--	--	--
Coal	7,321	--	--	--
TOTAL	7,321	71,463	1,471	715
Temperature, °C	21	109	--	--
Pressure, kPa	101	1,241	--	--
Enthalpy, kJ/kg	26,726	456	--	--

TABLE 4-19

MEATPACKING PLANT - CASE C
UTILITY SYSTEM MASS BALANCE

Basis: 5 GJ/h

(kg/h)

STREAM NO.	1	2	3	4	5	6	7	8
COMPONENT								
N_2	--	--	--	--	--	--	--	--
CO_2	--	--	--	--	--	--	--	--
O_2	--	--	--	--	--	--	--	--
H_2O	2,424	3,029	217	156	1,398	605	--	--
SO_2	--	--	--	--	--	--	--	--
Fuel Oil	--	--	--	--	--	--	154	--
TOTAL	2,424	3,029	217	156	1,398	605	154	2,681
Temperature, °C	170	109	93	170	21	170	21	288
Pressure, kPa	793	793	276	793	207	793	101	101
Enthalpy, kJ/kg	2,766	456	390	2,766	88	718	--	--

STREAM NO.	9	10	11	12	13
COMPONENT					
N_2	--	--	--	--	--
CO_2	--	--	--	--	--
O_2	--	--	--	--	--
H_2O	13,502	1,048	12,454	768	488
SO_2	--	--	--	--	--
Fuel Oil	--	--	--	--	--
TOTAL	13,502	1,048	12,454	768	488
Temperature, °C	21	60	82	170	170
Pressure, kPa	207	207	207	793	793
Enthalpy, kJ/kg	88	251	344	2,766	2,766

4.3.2.3 Major Equipment Summaries

The major equipment components for the conventional plant utility systems are summarized in Tables 4-20 to 4-22. The table lists the quantity and major size parameter for each major equipment item. Dimensional drawings of the stoker-fired boilers and coal feeding system are provided in Figures E-9 to E-11 of Appendix E.

TABLE 4-20

COPPER REFINERY

UTILITY SYSTEM EQUIPMENT LIST

Case C

Item No.	Description	Quantity	Size or Capacity	Comments
B-1A, B-1B, B-1C	Boiler & Stoker	3	36,280 kg/h	--
A-1A, A-1B, A-1C	Mechanical Dust Collectors	3 pairs	--	--
A-2A, A-2B	FGD Scrubber	2	149,424 m^3/h	90% removal at 100% load (2 boilers)
C-1A, C-1B	Induced Draft Fans	2	149,424 m^3/h	1-336 kw Motor
D-1	Deaerating Heater	1	28 m^3	--
E-1	Blowdown Heat Exchange	1	19 m^2	Shell/tube
E-2	Stack Heater	1	539 m^2	Cross flow
E-3	Ventilation Air Heater	--	657 m^2	Cross flow
P-1A, P-1B, P-1C	Boiler Feed Pumps	3	1-68 m^3/h	1-37 kw Motor, 1-37 kw Turbine
S-1	Stack	1	--	--
U-1	Coal Storage	1	6,958,440 kg/h	--
U-2	Coal Handling System	1	136,080 kg/h	19 kw Motor
U-3	Ash Handling System	1	7,258 kg/h	--
U-4	Feedwater Treatment	1	--	--
U-5	2 Transformers & 2 Rectifiers	4	--	--
U-6	Combustion Control & Instrumentation	--	--	--

TABLE 4-21

RECYCLE PAPERBOARD MILL

UTILITY SYSTEM EQUIPMENT LIST

Case C

Item No.	Description	Quantity	Size or Capacity	Comments
B-1A, B-1B, B-1C	Boiler & Stoker	3	31,745 kg/h	--
A-1A, A-1B, A-1C	Mechanical Dust Collector	3 pairs	--	--
A-2A, A-2B	FGD Scrubber	2	130,746 m^3/h	90% removal at 100% load (2 boilers)
C-1A-B	Induced Draft Fan	2	130,746 m^3/h	298 kw Motor
D-1	Deaerating Heater	1	28 m^3	--
E-1	Blowdown Heat Exchanger	1	6 m^2	Shell/tube
E-2	Stack Heater	1	307 m^2	Cross flow
P-1A-C	Boiler Feed Pumps	3 1	0-68 m^3/h 0-68 m^3/h	1-37 kw Motor 1-37 kw Turbine
S-1	Stack	1	--	--
U-1	Coal Storage	1	6,804,000 kg	Reserve
U-2	Coal Handling System	1	136,080 kg	19 kw Motor
U-3	Ash Handling System	1	7,258 kg	--
U-4	Feedwater Treatment	1	--	--
U-5	Transformer	2	--	--
U-6	Combustion Control & Instrumentation	--	--	--

TABLE 4-22

MEATPACKING INDUSTRY

UTILITY SYSTEM EQUIPMENT LIST

Case C

Item No.	Description	Quantity	Size or Capacity	Comments
B-1	Boiler	1	2,268 kg/h	Package type firetube
P-1	Boiler Feed Pumps	3	--	--
U-1	Feedwater Treatment	1	--	--
TK-1	Oil Storage Tank	--	57 m^3	--
E-1	Blowdown Exchanger	1	1 m^2	Shell/tube
E-2	1st Hot Water Heater	1	5 m^2	Shell/tube
E-3	2nd Hot Water Heater	1	4 m^2	Shell/tube

5.0 CAPITAL INVESTMENT FOR INDUSTRIAL UTILITY SYSTEMS

This section contains subsystem cost and total investment summary tables for the industrial utility systems described in the previous section. A brief description of the approach used in developing the cost estimates is presented first.

5.1 GENERAL APPROACH TO COST ESTIMATING

The utility system capital requirements were estimated from the cost of major equipment items using the logic shown in Figure 5-1. Wherever possible, the cost of major equipment items was based on "budget estimates" quoted by equipment suppliers. A list of equipment suppliers who furnished cost information is provided in Appendix D.

The direct cost of installing the equipment is obtained by multiplying the purchased equipment cost (FOB) by the Direct Cost Factor (DCF). The Direct Cost Factor adjusts FOB cost to include field materials and labor for the following:

1. Piping
2. Concrete work
3. Steel work
4. Instrumentation
5. Electrical work
6. Insulation and paint

DCF's for different types of equipment are defined by Guthrie (ref. 6).

The Bare Module Cost is obtained by applying the Indirect Cost Factor (ICF) to the Direct M&L Cost. The magnitude of the ICF's for individual equipment items can also be found in the forementioned reference. The factors applied in this evaluation are summarized by equipment type in Table 5-1.

Contingency and working capital are added to the sum of the module costs to obtain total capital investment. Contingency and fee were estimated at 20% of bare module cost. Working capital includes fuel, catalyst and chemical inventories. The cost estimates are expressed in mid-1977 dollars.

5.2 HEAT EXCHANGER COSTS

The approach used in developing capital cost estimates for the various heat exchangers required in each of the study cases involved two basic steps.

PRECEDING PAGE BLANK NOT FILMED

FIGURE 5-1

GENERALIZED INVESTMENT COST ESTIMATING LOGIC [a]

FOB Equipment	100	
Material Factor	xxx	x.xx Direct Cost Factor (DCF) [Piping, Concrete, Steel, Instruments, Electrical, Insulation, Paint, & Labor]
Labor Factor	xx	
Direct M&L Cost	xxx	
Engineering	xx	x.xx Indirect Cost Factor (ICF)
Construction Overhead	xx	
Bare Module Cost	xxx	
Contingency, etc.	xx	x.xx Contingency Factor (CF)
Fee	x	
Total Module Cost	xxx	= 100 x DCF x ICF x CF

[a] as recommended by K.M. Guthrie, "Process Plant Estimating, Evaluation, and Control"

TABLE 5-1

DIRECT AND INDIRECT COST FACTORS

Equipment Item	Direct Cost Factor	Indirect Cost Factor
Fuel Cell	1.15	1.14
Boilers	1.42	1.28
Coal & Ash System	1.61	1.34
FGD System	2.27[a]	
Exchangers	1.90[a]	
Expander/Compressor	1.15	1.14
Fans/Pumps	1.75	1.45
Fuel Storage	1.47	1.26
Inverters	1.15	1.14
Water Treatment	1.58	1.38
Instrument Air	1.60	1.45
N_2 Storage	1.10	1.10

[a] Product of direct and indirect factors.

First, budget-type cost estimates (FOB) were obtained for several typical types (kettle reboiler, shell and tube, crossflow finned tube) and sizes of heat exchangers from both B-Jac Computer Service heat exchanger design and cost programs and manufacturers/suppliers (Appendix F) of heat exchange equipment. This was done for heat exchangers representative of the type and size used in the system designs. Next, the budget estimates for these representative heat exchange units were prorated using a cost-capacity equation (ref. 6) (shown below), to obtain costs for all exchangers of similar design but of different materials of construction and/or surface. This approach allowed us to effectively cost a large number of heat exchangers from a manageable number of actual, internally consistent, budget estimates.

$$PEC_A = PEC_B \left(\frac{\text{surface area of Exchanger A}(m^2)}{\text{surface area of Exchanger B}(m^2)}\right)^X (Fm)(Fs)$$

where PEC_A = Estimated purchased equipment cost (FOB) for Exchanger A

PEC_B = Known purchased equipment cost (FOB) for Exchange B

X = Exponent scale factor (range 0.55 to 1.00)

Fm = Material adjustment factor (accounts for difference in construction material - range 1.0 to 3.0)

Fs = Surface area size adjustment factor (adjustment for very small units)

The scale factors, material factors, and surface area size factors were determined from either the budget quotes obtained directly from heat exchange equipment suppliers or information found in references (4) and (5).

Using this procedure, bare module costs for all the heat exchangers were determined and are shown in Tables C-10 to C-18 in Appendix C. As indicated in these tables, mid-1977 bare module costs were obtained by appropriately applying direct cost, indirect cost and de-escalation factors to the previously calculated, early-1978 FOB equipment costs.

5.3 FUEL CELL POWER SECTION AND REFORMER COST

The capital costs (selling prices) for the fuel cell power section and fuel processor were specified by NASA. Power section costs for Type A and B fuel cells are presented as a function of power rating (capacity) in Figure 5-2. Examination of the curves reveals an economy-of-scale as system capacity increases.

Similar cost data was also provided for the fuel processing section (reformer). The cost of this component is presented as a function of fuel consumption in Figure 5-3. Fuel processor capital cost differences between Type A and Type B cells are accounted for in that the fuel requirement for a given power rating is higher for the Type B cell.

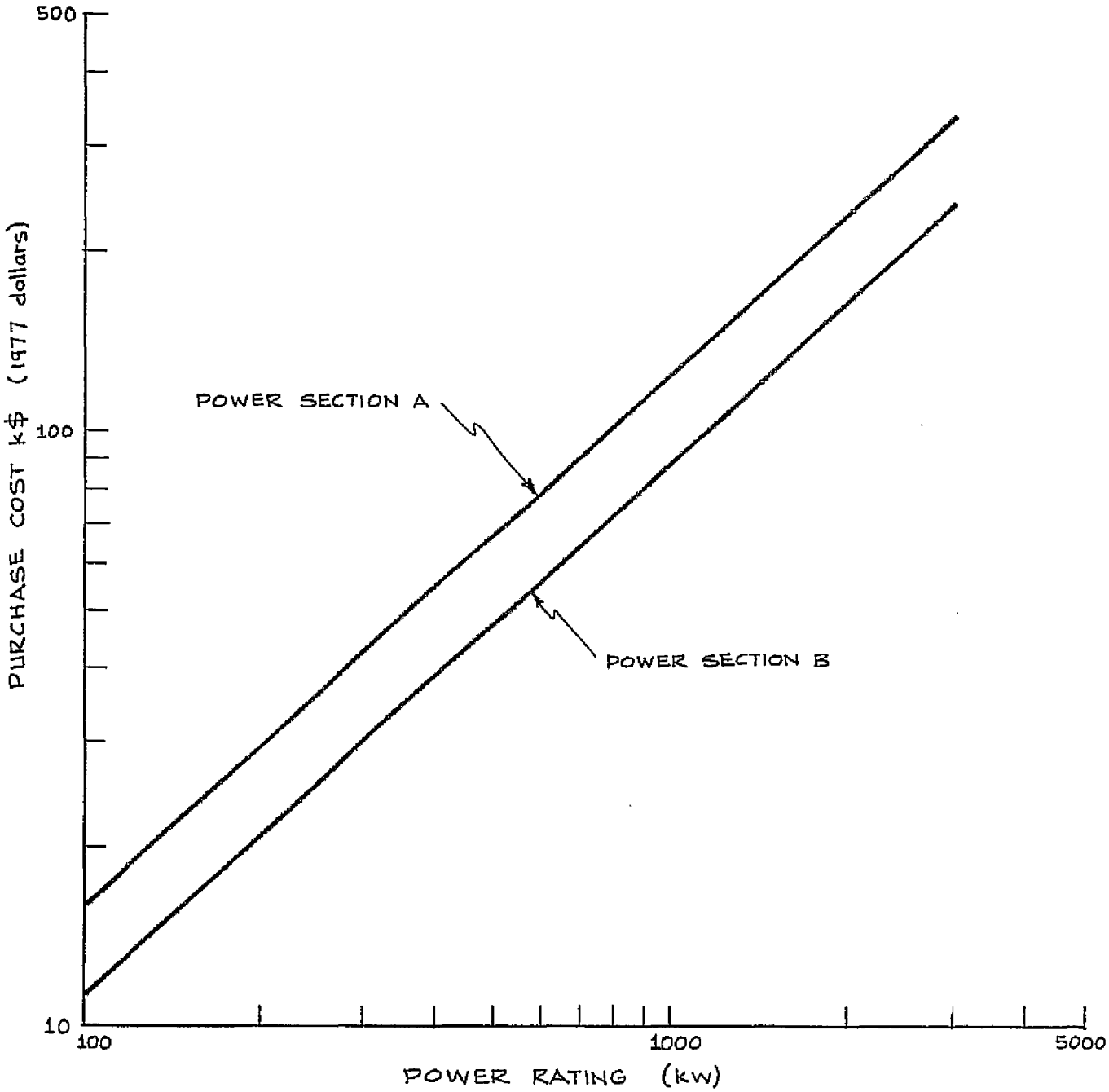

FIGURE 5-2

FUEL CELL POWER SECTION COSTS

Source: NASA-LeRC

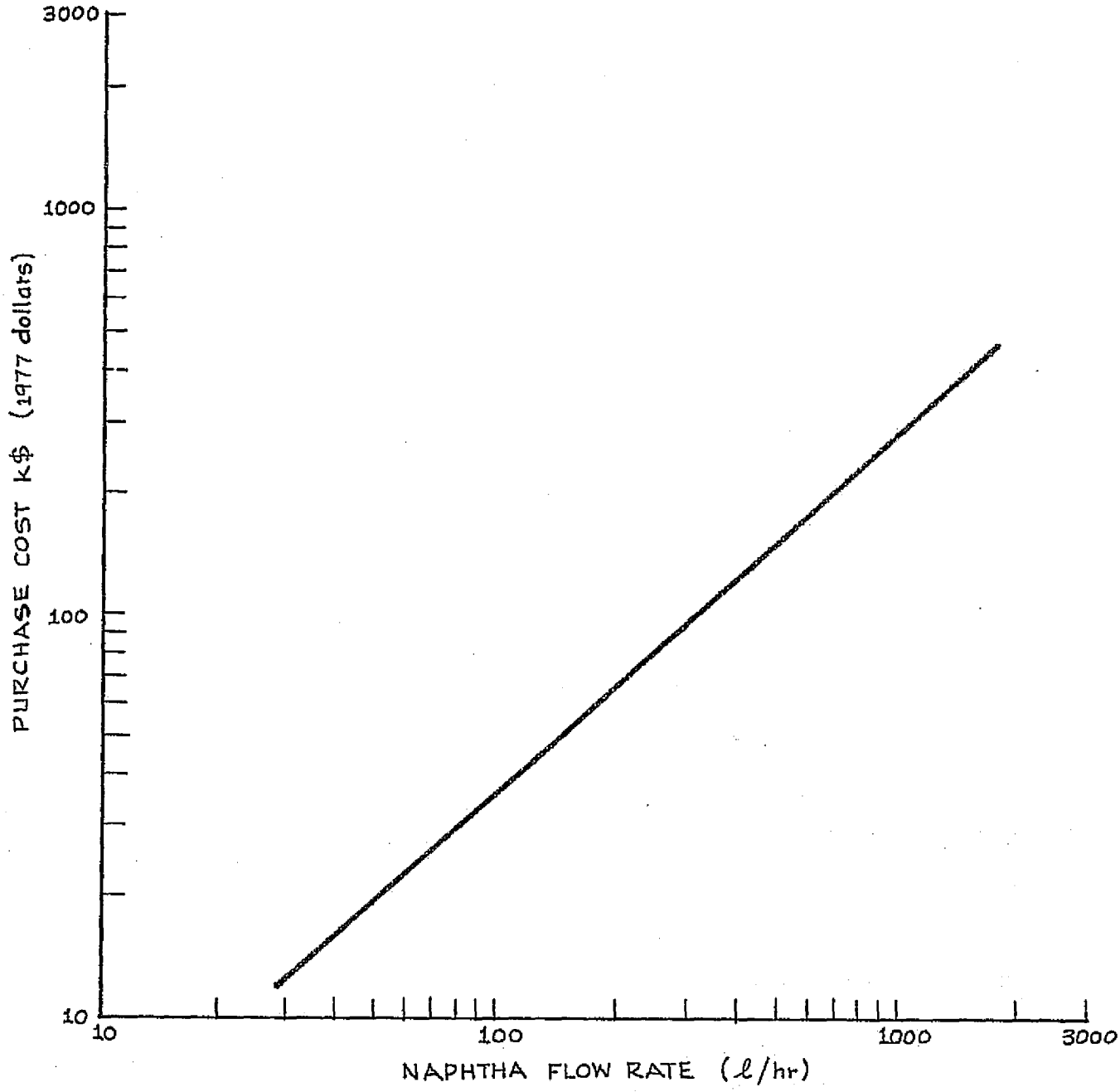

FIGURE 5-3

FUEL PROCESSING SECTION COSTS

Source: NASA-LeRC

5.4 FLUE GAS DESULFURIZATION SYSTEM COST

The capital investment costs for the flue gas desulfurization systems were developed by Arthur D. Little based on knowledge of systems we have designed for Combustion Equipment Associates, a major supplier of air pollution control systems. An itemized equipment cost breakdown of the FGD system in Case A for the recycle paperboard industry is presented in Table 5-2. It was assumed that as many of the items would be shop fabricated as would be permitted by rail or barge clearances. The equipment categories include gas-related items such as the venturi, the absorber, the ducting, and reheater. An induced draft scrubber fan is shown parenthetically and has not been included in the total equipment cost estimate, since a single fan installed just after the mechanical collector for both the boiler and scrubber system is included as a separate cost item in the final summary. The scrubber-liquor costs include equipment related to the treatment of the liquid scrubber effluent, i.e., the lime and soda ash storage, handling, and feed systems, the reactor system, and the thickener and filters for the solid/liquid dewatering process. Other miscellaneous costs include foundations, structural steel, and the filter and pump building.

Similar cost estimates were prepared for all five cases in each industry where coal-fired boilers were used. The capital investment for the APC equipment designed for the boilers specified for the five cases in the copper and recycle paperboard industries are presented in Table 5-3. The operating requirements for the APC equipment are presented in Section 6.0.

5.5 SYSTEM CAPITAL COSTS

The capital investment costs for the utility systems described in Section 4.0 are presented in summary form in Tables 5-4, 5-5, and 5-6. A detailed breakdown of cost by subsystem is provided in Appendix B. The investment requirements are expressed in 1977 dollars.

Table 5-4 summarizes capital costs for the copper refinery utility systems. Fixed plant cost is segregated into three major categories including the components as noted. Heat exchangers are the principal cost element in the remainder of plant category, which also includes the water treatment system, deaerator and inert gas system. The total investment for systems incorporating fuel cells are in the range of $24-29 million, compared to $17 million for the conventional non-cogeneration systems. The cost difference is due largely to the cost of the fuel cells and ancillaries, which represent about 35% of total investment for Cases A and B. Cases D and E include one and two spare fuel cells respectively and therefore the total capital investment for these cases is less than for Cases A and B.

Tables 5-5 and 5-6 summarize the same information for the recycle paperboard mill and the meatpacking plant, respectively. By contrast the capital cost differential between the fuel cell cases and the conventional

TABLE 5-2

ITEMIZED EQUIPMENT COST OF FGD
FOR RECYCLE PAPERBOARD INDUSTRY

Case A

Item	Installed Module Cost* $(000)
Gas-Related	
Absorber	230
Venturi	120
Dampers, Ducts, Joints	190
Reheater	40
Liquor-Related	
Line Feeder	130
Tanks, Silos	130
Pumps, Motors	270
Filters (2)	210
Thickener	60
Vessel Lining	100
Instrumentation & Piping	280
Other	710
TOTAL Bare Module Cost	2470

*Includes Direct Cost Factor (DCF) of 2.0 and Indirect Cost Factors (ICF) of 1.27.

TABLE 5-3

FLUE GAS DESULFURIZATION SYSTEMS
CAPITAL INVESTMENT SUMMARY

(Mid-1977)

INDUSTRY:	COPPER REFINERY			RECYCLE PAPERBOARD MILL		
	CASES			CASES		
Equipment Category	A&D	B&E	C	A&D	B&E	C
		$(000)			$(000)	
Gas-Related[a]	700	620	830	660	660	740
Scrubber Liquor-Related[a]	1200	1040	1440	1100	1100	1270
Other	780	670	1960	710	710	840
Sum Bare Module Costs	2680	2330	3230	2470	2470	2850

[a]Includes prorata share of instrumentation and piping.

TABLE 5-4

COPPER REFINERY

PLANT UTILITY SYSTEMS
CAPITAL INVESTMENT SUMMARY

(1977 dollars)

COST CATEGORY	CASES A	B	C	D	E
			$(000)		
Fuel Cells and Ancillaries*	10,486	9,235	--	8,610	8,167
Boilers and Ancillaries**	9,470	8,422	11,050	9,470	8,422
Remainder of Plant	3,575	3,464	2,493	3,484	3,397
TOTAL FIXED PLANT	23,531	21,121	13,543	21,564	19,986
Contingency & Fee (20%)	4,706	4,224	2,708	4,313	3,997
Working Capital†	277	279	275	277	279
TOTAL CAPITAL INVESTMENT	28,514	25,624	16,526	26,154	24,262

*Fuel cells, reformer, inverter, turbocompressor/fan; see Appendix B for more detail.

**Boilers, coal/ash handling, FGD

†Fuel inventory and 1 month operating expenses.

TABLE 5-5

RECYCLE PAPERBOARD MILL

PLANT UTILITY SYSTEMS
CAPITAL INVESTMENT SUMMARY

(1977 dollars)

COST CATEGORY	CASES A	B	C	D	E
			$(000)		
Fuel Cells and Ancillaries*	3,086	2,665	—	2,576	2,451
Boilers and Ancillaries**	8,606	8,602	9,700	8,606	8,606
Remainder of Plant	1,269	1,238	1,019	1,235	1,218
TOTAL FIXED PLANT	12,961	12,505	10,711	12,417	12,275
Contingency & Fee (20%)	2,592	2,500	2,142	2,483	2,455
Working Capital†	279	284	266	279	284
TOTAL CAPITAL INVESTMENT	15,823	15,289	13,119	15,179	15,014

*Fuel cell, reformer, inverter, turbocompressor/fan; see Appendix B for more detail.

**Boilers, coal/ash handling, FGD, building.

†Fuel inventory and 1 month operating expenses.

TABLE 5-6

MEATPACKING PLANT

PLANT UTILITY SYSTEMS
CAPITAL INVESTMENT SUMMARY

(1977 dollars)

COST CATEGORY	CASES A	B	C	D	E
			$(000)		
Fuel Cells and Ancillaries*	427.4	377.0	--	291.4	259.2
Boilers and Ancillaries**	37.3	37.3	56.9	37.3	37.3
Remainder of Plant	325.3	266.2	21.6	286.3	225.2
TOTAL FIXED PLANT	790.0	680.5	78.5	615.0	521.7
Contingency & Fee (20%)	158.0	136.1	15.7	123.0	104.3
Working Capital†	18.7	20.6	17.3	18.7	20.6
TOTAL CAPITAL INVESTMENT	966.7	837.2	111.5	756.7	626.6

*Fuel cell, reformer, inverter, turbocompressor/fan; see Appendix B for more detail.

**Boilers, coal/ash handling, FGD, building.

†Fuel inventory and 1 month operating expenses.

plant are smaller for recycled paperboard. In this industry the electrical load relative to the thermal load is much smaller. Consequently, boiler costs dominate the investment requirements. The capital investment in fuel cells is less than 20% of the total investment.

The most extreme variation is apparent from the analysis in the context of the meatpacking plant. This is due to a relatively low ratio of thermal to electric load and the use of small package boilers to generate steam. The capital cost for utility systems using fuel cells is 6 to 9 times greater than for the conventional case. The capital investment for fuel cells and ancillaries is 40% of the total for these designs. In addition, heat exchangers and thermal energy storage and peripherals contribute another 30%.

Two items shown in the cost breakdown appearing in Appendix B are worth mentioning. The purchased price for the turbocompressor required for our design is $15/kW of fuel cell output. This price is for a 418 kW machine with less than 80% efficiency sized for the 2200 kW module used in the copper refining application. It also assumes a significant level of mass production. This price is based on private communications with AIResearch. Information on the price of small machines suitable for the 114 kW module is sketchy, but we estimate the cost of $25-30/kW of fuel cell output. These prices (1977) might be reduced by incorporating supplemental fuel injection and reducing the required efficiency performance of the turboexpander.

Based on current technology, we estimate the cost of the inverters to be $60-75/kW in 1977 dollars, for a system about half the size of the 4.8 mW demonstrator. Making an allowance for a larger system, a highly refined design and GNP inflation, this price is not that different from the United Technology Corporation target price of $45/kW in 1975 dollars.

6.0 OPERATING REQUIREMENTS

6.1 ENERGY INPUTS

6.1.1 Basis of Estimate

To estimate the boiler fuel requirements and improve the accuracy of the naphtha consumption estimate we resorted to simple computer models of the alternative utility systems. These models, based on the appropriate mass and energy balance equations, took into account the local efficiencies of electricity and steam generation and the parasitic thermal and electric loads of the major equipment in the utility systems. The models were solved iteratively to obtain approximate solutions satisfying typical simultaneous thermal and electric hourly load profiles. These solutions yielded daily totals of the variable operating requirements pertinent to each representative operating condition. When multiplied by the number of days per year such conditions would be encountered, total annual consumption of fuels, purchased electricity, chemicals, etc. were estimated.

In constructing the simple computer models, we assumed that the fuel cells would normally be operated over a fairly narrow range near their peak electrical efficiency. Thus, this efficiency was taken as a constant 40%* for the Type A (pressurized) fuel cell and 33% for the Type B (ambient pressure) cell. Boiler efficiencies were also assumed constant. Parasitic loads due to minor equipment such as fuels pumps were ignored; parasitic loads due to major equipment which were included generally totalled only a few percent of the net process load.

For each of the alternative utility systems we estimated the energy inputs (naphtha, coal, etc.) necessary to operate the system for a "typical" year. This "typical" year consisted of a number of representative operating conditions--such as summer weekends or winter weekdays--which together reflected the range of average hourly thermal and electric demands required by the process plant. Typical daily profiles of thermal and electric demand were developed on the basis of real data collected from the plants described previously; these profiles (presented in Appendix F) accurately reflected both hourly and daily demands and, when integrated over the appropriate number of days and seasons, agreed with the actual annual loads to within 10%. These representative profiles generally did not encompass the maximum thermal demand considered when sizing the utility system equipment; but, since peak demands occur during only a few hours per year, the approximation of a "typical" year excluding the peaks introduced a negligible error in the estimates of annual energy consumption.

PRECEDING PAGE BLANK NOT FILMED

*DC electrical output compared to fuel value delivered to fuel processor.

The electrical output and, hence, the naphtha consumption of the fuel cells, could be estimated fairly accurately by knowing just the annual electric load of the process plant and the electrical generating efficiency of the utility system. However, the fuel requirements of the supplementary boilers in the non-conventional utility systems were more difficult to estimate since they were functions of the concurrent thermal and electrical loads. Consequently, the computer models were developed to compute the annual energy consumption.

6.1.2 Summary of Annual Energy Inputs

The annual energy requirements of the alternative utility systems are summarized in Table 6-1. Purchased electricity has been expressed in terms of the average energy required to generate it (11.1 MJ/kWh). As shown, when the energy required by the outside utility is included in the conventional case, the use of fuel cells with higher electrical generating efficiencies does result in a reduction in the total energy requirements.* These energy savings range from 16% in recycle paperboard to nearly 30% in meatpacking where the thermal/electric ratio is lower. The higher efficiency pressurized fuel cell (Type A) generally shows a greater energy saving than the Type B cell. These energy savings would generally be realized as decreased consumption of coal and nuclear fuel by electric utilities at the expense of increased consumption of higher valued naphtha by the fuel cells.

6.2 OTHER OPERATING REQUIREMENTS

6.2.1 Basis of Estimates

While knowledge of the energy inputs required by the alternative utility systems is interesting in terms of energy conservation and necessary in estimating the largest part of the operating costs, other operating requirements need to be included to develop a more complete estimate of operating cost. Many of these other operating requirements are a function of the energy inputs, e.g., the amount of scrubber chemicals needed to remove sulfur from the boiler flue gas, or the amount of make-up water needed by the steam system. Others, such as operating labor, are stronger functions of the structure of the utility system. The other operating requirements included in this analysis are listed in Table 6-2 along with the bases used in estimating them.

---

*The energy savings computed in this study agree reasonably well with work done previously for ERDA by United Technologies, Inc. and Gordian Associates, Inc. That work, under contract FCR-0439 estimated a 20% saving in meatpacking and 21% saving in copper refining due to use of an unpressurized phosphoric acid fuel cell.

TABLE 6-1

COMPARISON OF ENERGY CONSUMPTION BY DIFFERENT UTILITY SYSTEMS

(10^3 GJ/yr for Example Plant)

Industry	Energy Source	Case A	Case B	Case C	Case D	Case E
Copper Refining	Naphtha	1471.2	1797.7	--	1465.3	1795.9
	Coal	634.3	486.6	902.7	636.8	487.1
	Electricity[a]	--	--	1744.4	6.3	1.7
	TOTAL	2105.5	2284.3	2647.1	2108.4	2284.7
	% Energy Saving[b]	20.5	13.7	--	20.3	13.6
Recycle Paperboard	Naphtha	292.9	361.7	--	292.5	361.5
	Coal	905.5	864.7	1077.3	905.5	864.7
	Electricity[a]	--	--	345.8	0.4	0.1
	TOTAL	1198.4	1226.4	1423.1	1198.4	1226.3
	% Energy Saving[b]	15.8	13.8	--	15.8	13.8
Meatpacking	Naphtha	31.9	36.8	--	31.9	36.8
	Fuel Oil	--	--	19.5	--	--
	Electricity[a]	--	--	26.0	<.01	<.01
	TOTAL	31.9	36.8	45.5	31.9	36.8
	% Energy Saving[b]	29.9	19.2	--	29.9	19.2

[a]Purchased electricity taken as 11.1 MJ/kWh.

[b]Energy saving computed relative to Case C.

TABLE 6-2

NON-ENERGY OPERATING REQUIREMENTS
BASIS OF ESTIMATED QUANTITY

Operating Requirement	Basis of Estimated Quantity
Water	Quantity derived from material balance. Valued at \$0.13 per m^3.
Liquid N_2	4.5 g N_2/kWh (DC) required to maintain cell inertness. Valued at 7.7¢/kg N_2.
BFW Chemicals	Prorated on basis of make-up water requirements. For each industry, unit cost was a function of quantity and quality of available make-up water.
Scrubber Chemicals	\$2.51/tonne coal burned. Based on 3% sulfur coal; 77% scrubber efficiency, 46 kg/tonne coal, lime @ \$44/tonne and 2.4 kg Na_2CO_3/tonne coal @ \$93.70/tonne.
FGD Sludge Disposal	\$1.98/tonne coal burned. Based on 10% ash coal; \$11/tonne mixed sludge disposal cost.
Operating & Maintenance	For coal-fired boilers: 10 operators, 2 maintenance men, 2 supervisors. For oil-fired boilers: 2 operators.
Labor (excl. fuel cell maintenance)	\$7/hr for non-supervisory labor; \$10/hr for supervisory labor.
Labor Overheads	100% of direct O&M labor cost.
Boiler Maintenance Materials	\$2.20/tonne of coal burned for coal-fired boilers; or 2% of capital investment in oil-fired boilers.
Fuel Cell Maintenance	0.065¢/kWh DC fuel cell output.
Other Maintenance	2% of capital investment in equipment excluding boilers and fuel cells.
Amortized Fuel Cell Replacement	50% of cost of fuel cell and fuel processor every 30,000 hours.

6.2.2 Summary of Other Operating Requirements

The annual value of the non-energy operating requirements of alternative utility systems are summarized in Tables 6-3, 6-4, and 6-5. As shown in Table 6-3, the cost of non-energy operating requirements for the copper refinery utility systems is dominated by the amortized cost of fuel cell stack replacement. This cost was estimated on the basis of replacing 50% of the capital investments in the fuel cell stacks and fuel processors after 30,000 hours of operation, due primarily to deterioration of the catalytic components of those devices. The system replacement period was calculated assuming that the fuel cell modules would operate at an average of 80% of design output and that individual modules would be rotated in and out of service so all modules would wear out at the same rate. The amortized fuel cell replacement costs are slightly higher for systems with fewer spare modules (Cases D and E) because the modules in these systems are used more regularly and wear out more quickly. The difference is attributable to the earlier need for new investment for Cases D and E, which is not discounted as much in the amortizing formula as the somewhat larger investment required at a later time by the systems with more spare modules (Cases A and B).

Make-up water requirements are higher for the utility systems using fuel cells because not all of the reformer steam required by the fuel processors is recovered. In the copper refinery applications, this additional loss of water increased the make-up water requirements by about 30%.

Because some waste heat is obtained from the fuel cells, the fuel consumption by the supplementary boilers was less than that of the boiler in the conventional systems. This change is reflected in decreased boiler operating costs (maintenance, scrubber chemicals, and FGD sludge disposal) for the fuel cell based systems.

In the recycle paperboard applications labor charges, due primarily to staffing the boiler operations, dominate the costs of non-energy operating requirements. The electrical generating capacity in these utility systems is much smaller in relation to the boiler operations than is the case in the copper refinery systems. Thus, fuel cell replacement costs play a much smaller role in the overall costs.

Labor charges dominate the cost of non-energy operating requirements in the meatpacking systems also. Labor requirements are not reduced in the same proportion as the capacity of the utility system equipment.

TABLE 6-3

NON-ENERGY OPERATING REQUIREMENTS

COPPER REFINING UTILITY SYSTEMS

(Constant 1977 $)

Operating Requirement	Estimated Value of Annual Requirement, $\$10^3$				
	Case A	Case B	Case C	Case D	Case E
Water	62.4	63.8	48.5	62.4	63.8
Liquid N_2	57.3	57.7	--	57.1	57.5
BFW Chemicals	25.7	26.3	20.0	25.7	26.3
Scrubber Chemicals	57.9	45.4	82.9	58.6	45.6
FGD Sludge Disposal	45.8	35.9	65.6	46.3	36.1
O&M Labor	208.0	208.0	208.0	208.0	208.0
Labor Overheads	208.0	208.0	208.0	208.0	208.0
Boiler Maintenance Materials	52.3	40.2	74.5	52.9	40.4
Fuel Cell Maintenance	106.3	107.2	--	105.9	107.0
Other Maintenance	171.5	151.8	114.5	171.5	151.8
Amortized Fuel Cell Replacement	733.7	668.1	--	799.9	697.2
TOTAL ANNUAL COST OF NON-ENERGY OPERATING REQUIREMENTS	1728.9	1612.4	822.0	1796.3	1641.7

Arthur D Little, Inc

TABLE 6-4

NON-ENERGY OPERATING REQUIREMENTS

RECYCLE PAPERBOARD UTILITY SYSTEMS

(Constant 1977 $)

Operating Requirement	Estimated Value of Annual Requirement, $\$10^3$				
	Case A	Case B	Case C	Case D	Case E
Water	23.8	26.8	23.5	23.8	26.8
Liquid N_2	11.4	11.6	--	11.4	11.6
BFW Chemicals	1.5	1.8	1.5	1.5	1.8
Scrubber Chemicals	85.0	81.1	101.1	85.0	81.1
FGD Sludge Disposal	67.1	64.0	79.8	67.1	64.0
O&M Labor	208.0	208.0	208.0	208.0	208.0
Labor Overheads	208.0	208.0	208.0	208.0	208.0
Boiler Maintenance Materials	74.6	71.2	88.7	74.6	71.2
Fuel Cell Maintenance	21.1	21.5	--	21.1	21.5
Other Maintenance	91.7	85.5	77.2	91.7	85.5
Amortized Fuel Cell Replacement	176.5	165.0	--	187.7	197.4
TOTAL ANNUAL COST OF NON-ENERGY OPERATING REQUIREMENTS	968.7	944.5	787.8	979.9	976.9

TABLE 6-5

NON-ENERGY OPERATING REQUIREMENTS

MEATPACKING UTILITY SYSTEMS

(Constant 1977 $)

Operating Requirement	Estimated Value of Annual Requirement, $\$10^3$				
	Case A	Case B	Case C	Case D	Case E
Water	0.7	1.1	0.5	0.7	1.1
Liquid N_2	0.1	0.1	--	0.1	0.1
BFW Chemicals	4.3	7.1	3.1	4.3	3.1
Scrubber Chemicals	--	--	--	--	--
FGD Sludge Disposal	--	--	--	--	--
O&M Labor	33.0	33.0	33.0	33.0	33.0
Labor Overheads	33.0	33.0	33.0	33.0	33.0
Fuel Cell Maintenance	1.6	1.6	--	1.6	1.6
Other Maintenance, incl. boiler	11.8	7.4	1.6	11.8	7.4
Amortized Fuel Cell Replacement	11.1	10.5	--	12.6	12.0
TOTAL ANNUAL COST OF NON-ENERGY OPERATING REQUIREMENTS	95.6	93.8	71.2	97.1	95.3

7.0 ECONOMIC ANALYSIS

7.1 GENERAL APPROACH

The economic analysis of the five utility system options for each industry was accomplished by calculating the levelized annual cost of operating the systems. Both capital and operating costs were considered. The procedures used in estimating the capital costs of the utility systems have been previously presented. This section describes the way these capital investments were converted to capital charges and combined with energy and non-energy related variable costs to obtain the overall levelized annual operating cost.

The computation of the levelized annual cost was accomplished by segregating annual costs into three categories, namely, energy related costs, non-energy related costs and fixed charges. The cost items grouped in each category were as follows:

Energy Related (E): Purchased power and fuel

Non-Energy Related (NE): Other variable and semi-variable costs summarized in Tables 6-3 to 6-5

Fixed Charges: Depreciation, return-on-investment, income taxes, and local taxes and insurance

These cost elements were first converted into a series of future cash flows (escalation allowed) which were then levelized to obtain a uniform annual cost series. This procedure is presented graphically in Figure 7-1. First year costs NE and E are simultaneously escalated and presently valued by applying the factor K defined in Figure 7-1. The numerator of K is an escalation term and the denominator is the present worth factor for year n. Summing over n years provides the present worth of the operating expenses over the project life. The resulting product is then multiplied by the uniform series capital recovery factor to obtain the levelized annual costs. Both energy (E) and non-energy (NE) related costs were handled in this manner.

Levelized capital charges were determined from the product of the capital investment and utility-type fixed charge rate. Fixed charge rates incorporate accelerated depreciation and tax credits and were computed using standard relationships similar to those in reference (7).

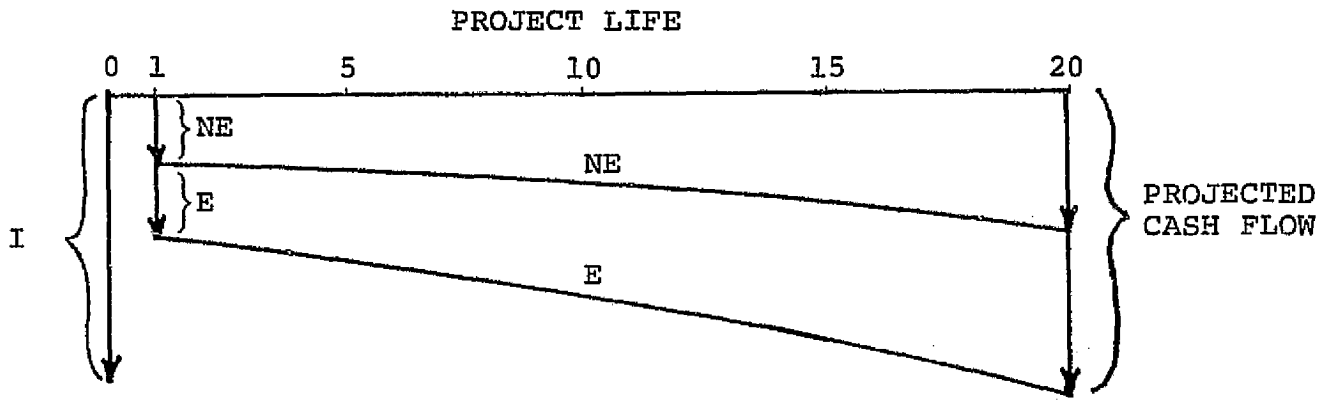

I = CAPITAL INVESTMENT

NE = NON-ENERGY COSTS

E = ENERGY COSTS

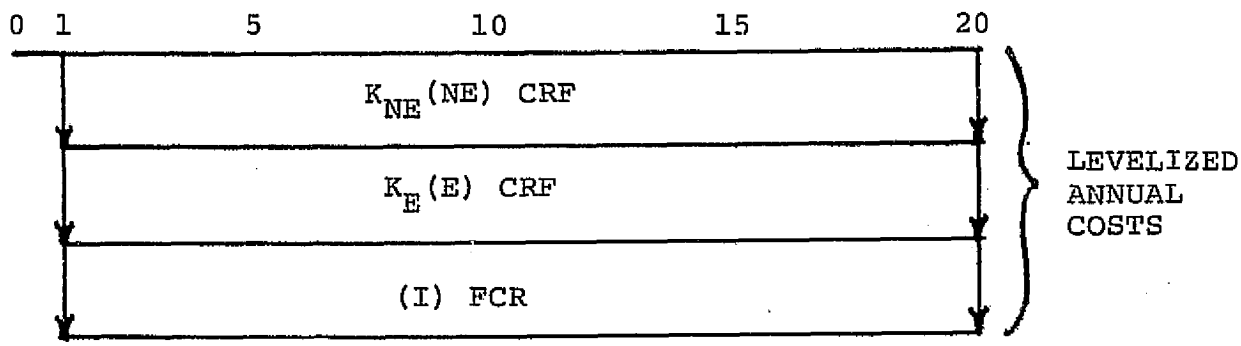

$$K = \left[\sum_{n=1}^{20} \frac{(1+i+e)^n}{(1+r)^n} \right]$$

where: i = inflation
e = real escalation
n = year
r = weighted cost of capital

FCR = Fixed Charge Rate with SYD depreciation and 10% tax credit

FIGURE 7-1

APPROACH TO LEVELIZED COST ANALYSIS

7.2 ENERGY VALUES AND COST FACTORS

7.2.1 Projected Energy Values

Projected energy values used for the base case cost comparison are summarized in Table 7-1. These values are based on the results of previous studies by Arthur D. Little (ref. 1) and others (ref. 2) as noted. A 15% mark-up was added to the EPRI RP-759-2 coal prices (delivered to electric utilities) to approximate industrial steam coal prices in 1975 constant dollars. Inflation based on 6% and 8% for 1976 and 1977, respectively, was applied to obtain 1985 prices in 1977 dollars. Electricity rates include a weighted average fuel charge based on representative fuel mix. These energy values are used in conjunction with the energy consumption data of Table 6-1 to compute unlevelized annual energy costs presented in Table 7-2.

7.2.2 Annual Cost Factors

Levelized annual costs were determined from the following generalized relationship:

LAC = levelized annual cost in current dollars

$$= I \cdot FCR + E \underbrace{\left[\sum_{n=1}^{N} \frac{(1+i+e_E)^n}{(1+r)^n} \right]}_{\text{or } K_E} CRF_r + NE \underbrace{\left[\sum_{n=1}^{N} \frac{(1+i+e_{NE})^n}{(1+r)^n} \right]}_{\text{or } K_{NE}} CRF_r$$

where:
- FCR = fixed charge rate
- I = capital investment in 1977 dollars (from Tables 4-3 to 4-5)
- E = annual energy cost in 1977 dollars (from Table 7-2)
- NE = annual non-energy operating costs in 1977 dollars (from Tables 6-3 to 6-5)
- i = dollar inflation rate
- e_E = energy cost escalation rate
- e_{NE} = non-energy cost escalation rate
- r = weighted cost of capital with inflation rate i
- n = project life, years
- CRF = capital recovery factor at r cost of capital and n years

This expression allows for differences in the cost of money, inflation, and escalation rates, for cases where inflation is included in the cost of capital. When it is desired that the annual cost comparison be

TABLE 7-1

SUMMARY OF PROJECT ENERGY VALUES (BASE CASE)

with crude oil equilization tax - $/GJ

(1977 dollars)

INDUSTRY:	RECYCLE PAPER	COPPER REFINING	MEATPACKING
REGION:	New England	West South Central	West Coast (Calif.)
YEAR:	1985	1985	1985
Energy Form			
Virgin Naphtha*	5.10	4.89	4.77
No. 2 Distillate	4.87	4.67	4.59
Coal†	1.46	1.47	1.46
Electricity,§ ¢/kWh	5.11	4.14	3.60

*EPRI RP 1042 Report decontrol scenario values inflated to 1977 dollars (1.145 multiplier).

†Industrial steam coal based on EPRI RP 759-2 electric utility burner tip prices with 15% mark-up and inflated to 1977 dollars.

§Arthur D. Little, Inc. estimate.

TABLE 7-2

UNLEVELIZED 1985 ENERGY COSTS*

($ Thousand)

CASE:	A	B	C	D	E
Copper Refining					
Naphtha	7188.5	8783.7	--	7159.7	8782.0
Coal	932.8	715.7	1327.4	943.3	716.0
Electricity	--	--	6525.3	273.4	197.5
Recycle Paper					
Naphtha	1492.2	1842.8	--	1490.8	1492.1
Coal	1320.5	1261.0	1571.0	1320.7	1320.6
Electricity	--	--	1593.8	41.7	40.5
Meatpacking					
Naphtha	154.9	173.0	--	154.9	173.0
Fuel Oil	--	--	88.6	--	--
Electricity	--	--	84.6	9.3	9.3

*All energy costs escalated at 2% per annum.

determined in levelized constant dollars (i=o), this relationship becomes:

$$LAC^* = I \quad FCR^* + E \underbrace{\left[\sum_{n=1}^{N} \frac{(1+e_E)^n}{(1+r^*)^n} \right]}_{\text{or } K_E} CRF_r^* + NE \underbrace{\left[\sum_{n=1}^{N} \frac{1}{(1+r^*)^n} \right]}_{\text{or } K_{NE}} CRF_r^*$$

where the asterisk indicates inflation-free values. For this case K_{NE} is equal to $1/CRF_r^*$, hence the non-energy cost term reduces to annual cost expressed in 1977 dollars.

Economic assumptions used in computing factors for the above expression are summarized in Table 7-3. In the absence of inflation, real incremental energy escalation is assumed at 2% per annum. Tax lives specific to the industries are based on IRS allowances. Using debt and equity costs for different inflation rates, the weighted cost of capital excluding inflation was determined. The numerical values of FCR*, K_E, and K_{NE} for the inflation-free case are also summarized in Table 7-3. Therefore the constant dollar levelized annual cost for copper refining becomes:

$$LAC^* = 0.1212I + 1.1853E + NE$$

7.3 RESULTS OF ECONOMIC ANALYSIS

The levelized annual costs of operating the various utility systems are summarized in Tables 7-4 to 7-6. Note that the relative costs of the alternative systems for a given industrial application are independent of the type of dollars used in the analysis. At the projected energy prices identified in Section 7.2, the total levelized annual costs of the fuel cell based utility systems are higher than the cost of the conventional system in the copper refining and meatpacking plants; the levelized costs of conventional and fuel cell systems are about the same in the recycle paperboard application.

In every case the cost of energy dominates the total levelized cost, particularly in the larger systems where economies-of-scale have reduced the significance of capital charges. In the fuel cell systems the cost of naphtha is the largest portion of energy cost; and naphtha for the fuel cells is generally about the same or more than the cost of purchased power for the conventional systems. Given the dominance of energy costs in the total operating cost, it is not surprising that the fuel cell systems are most competitive in the northeast region (recycle paperboard) with the highest purchased power price.

Capital charges and non-energy related operating charges become more significant as the physical size of the utility systems diminishes. Economies-of-scale adversely affect the capital charges in small systems

TABLE 7-3

SUMMARY OF ASSUMPTIONS USED IN COST ANALYSIS

GENERAL FACTORS

Energy Escalation, e_E	- 2.0% p.a.
Non-Energy Escalation, e_{NE}	- 0
Project Life	- 20 years
Tax Rate	- 48%
Investment Tax Credit	- 10%
Method of Depreciation	- SYD
Local Taxes & Insurance	- 2%

INDUSTRY SPECIFIC FACTORS

	Copper Refining	Recycle Paper	Meatpacking
Debt/Equity, %	30/70	50/50	50/50
Tax Life, yr	14	16	18
	i = 0	i = 0	i = 0
Cost of Debt, %	3	3	3
Cost of Equity, %	9	9	9
Weighted Cost of Capital (r*), %	7.2	6.0	6.0

CALCULATED FACTORS

FCR*[a]	0.1212	0.1081	0.1095
K_E	12.3593	13.6852	13.6852
K_{NE}	10.4313[b]	11.4699[b]	11.4699[b]
CRF_r	0.0959	0.0872	0.0872

[a] includes local taxes and insurance.

[b] $1/CRF_r$ (inflation free).

TABLE 7-4

LEVELIZED ANNUAL COST
COPPER REFINERY UTILITY SYSTEMS

(1985 start-up)

	Case A	Case B	Case C	Case D	Case E
		($000 constant 1977 dollars)			
Capital Charge	3455.9	3105.5	2003.0	3169.9	2940.6
Naphtha	8520.2	10410.9	--	8486.1	10408.9
Coal	1105.6	848.3	1573.3	111.0	848.6
Electricity	--	--	7734.2	324.3	234.1
Non-Energy Charge	1728.9	1612.4	822.0	1796.3	1641.7
TOTAL ANNUAL COST	14810.6	15977.2	12132.5	14887.6	16073.9

TABLE 7-5

LEVELIZED ANNUAL COST
RECYCLE PAPERBOARD UTILITY SYSTEMS

(1985 start-up)

	Case A	Case B	Case C	Case D	Case E
		($000 constant 1977 dollars)			
Capital Charge	1710.5	1652.7	1418.2	1640.8	1623.0
Naphtha	1780.7	2199.1	--	1779.1	2198.8
Coal	1575.8	1504.8	1874.8	1575.6	1504.8
Electricity	--	--	1902.0	38.9	41.3
Non-Energy Charge	968.7	944.5	787.8	979.9	976.9
TOTAL ANNUAL COST	6035.7	6301.1	5982.7	5975.4	6344.8

TABLE 7-6

LEVELIZED ANNUAL COST
MEATPACKING UTILITY SYSTEMS

(1985 start-up)

	Case A	Case B	Case C	Case D	Case E
		($000 constant 1977 dollars)			
Capital Charge	105.9	91.7	12.2	82.9	68.6
Naphtha/Fuel Oil	184.8	206.4	105.7	184.8	206.4
Electricity	--	--	101.0	11.1	11.1
Non-Energy Charge	95.6	93.8	71.2	97.1	95.3
TOTAL ANNUAL COST	386.3	391.9	290.1	375.9	381.4

and relatively inelastic staffing requirements similarly affect the large labor cost component of the non-energy related operating charges.

It is clear that using an outside utility to supply standby power requirements, as in Cases D and E, instead of a highly reliable fuel cell system with many spare modules, has little impact on levelized annual cost. Elimination of spare fuel cell modules does have considerable impact on first cost and therefore on the capital charge, especially in smaller utility systems with low thermal/electric ratios (e.g., meatpacking).

Coincidentally, the only case in this study in which a positive return on investment resulted from installing fuel cells was for the recycle paperboard plant which had the highest thermal/electric ratio. This should not be interpreted to mean that a high thermal/electric ratio will necessarily favor fuel cells. In fact, in the simple method of economic analysis used here the high thermal/electric ratio has simply masked the high incremental cost of the fuel cell system.

The sensitivity of the levelized cost calculations to estimates of fuel prices and capital investment is illustrated in the breakeven plots of Figure 7-2 to 7-6. These figures plot the locus of fuel prices and capital investments which make the levelized annual cost of Cases A and B equal to the levelized annual cost of the conventional system. Plots for Cases D and E are omitted from this analysis since they would be indistinguishable from Cases A and B.

The slope of lines in these figures is a measure of sensitivity to the most significant variable--naphtha price. Because of its lower conversion efficiency, the Type B fuel cell causes Cases B and E to be more sensitive to naphtha price than Cases A and D. The distance between lines of different capital investment is a measure of sensitivity to the total capital investment required in Case A or B. The capital investment referred to is for the total system, not just the fuel cell portion. Thus, for example, a 20% decrease in the total investment required for Case A in the copper industry corresponds to a reduction of nearly 70% in the cost of the fuel cell and fuel processor. The capital costs of the Type A systems are higher than those of Type B, and thus the economics of Cases A and D are more sensitive to variations in capital cost than Cases B and E. The imapct of doubling coal prices is also indicated on the breakeven plots and reveals a relatively small sensitivity to this variable. The economics of these utility systems are generally an order-of-magnitude less sensitive to coal price than to total capital investment.

Our best estimates of energy prices that will prevail in the 1985 time frame are also indicated in the breakeven plots. Generally, the Case A breakeven lines are closer to these best estimate points than are the Case B breakeven lines. Allowing some variation in the estimate, one might define a region of expected energy values instead of a single point. Allowing for the variation we still believe that the Type A systems will generally be more competitive in the 1985 time frame than the Type B systems. Another reason for preferring the Type A design is that energy prices in general are expected to be increasing in real terms, which will justify the higher capital cost of this design.

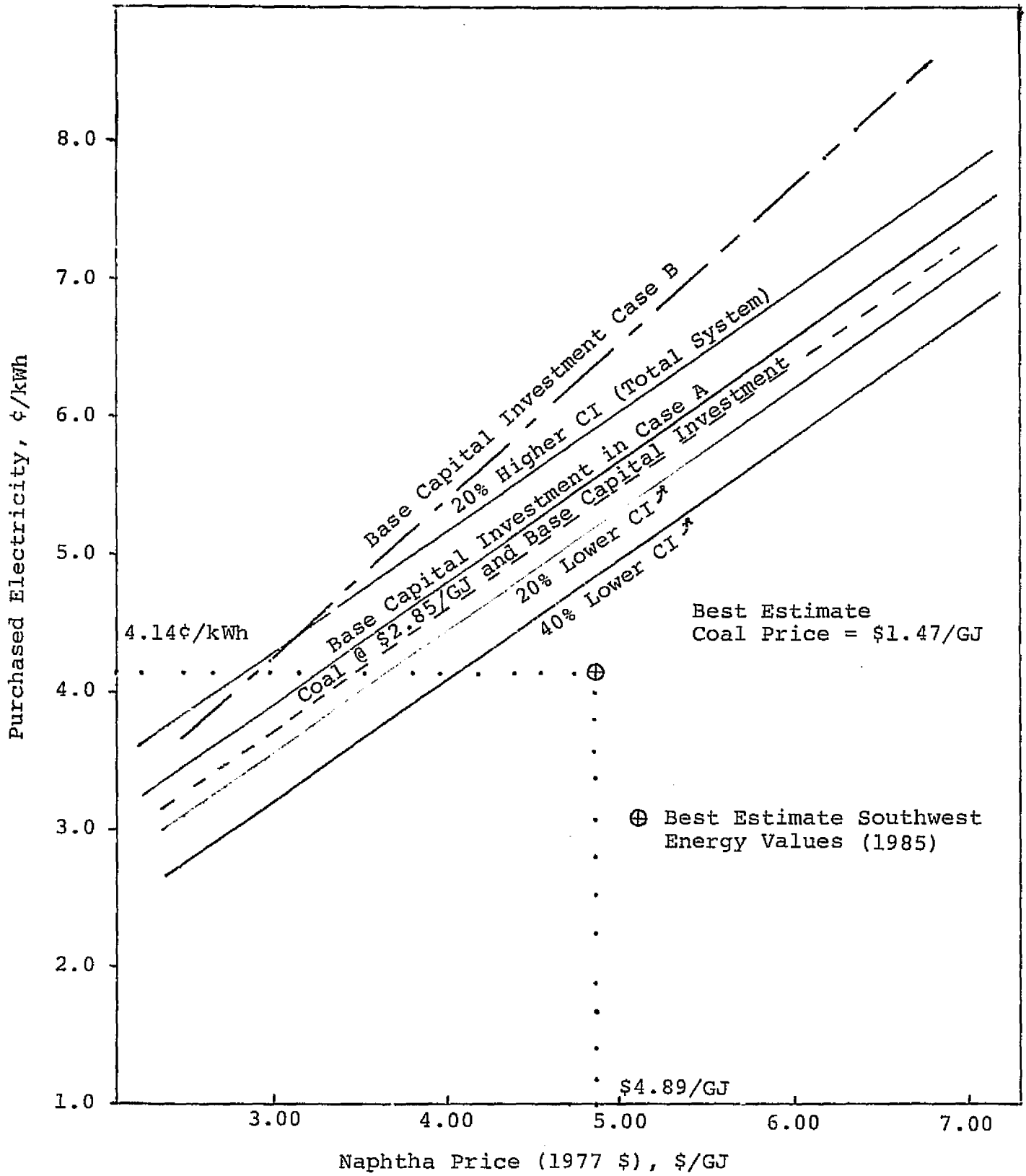

FIGURE 7-2

COPPER REFINERY UTILITY SYSTEM
FUEL AND ELECTRICITY PRICE SENSITIVITY FOR
CASE A FUEL CELL SYSTEM TO BREAK-EVEN
WITH CONVENTIONAL UTILITY SYSTEM (CASE C)

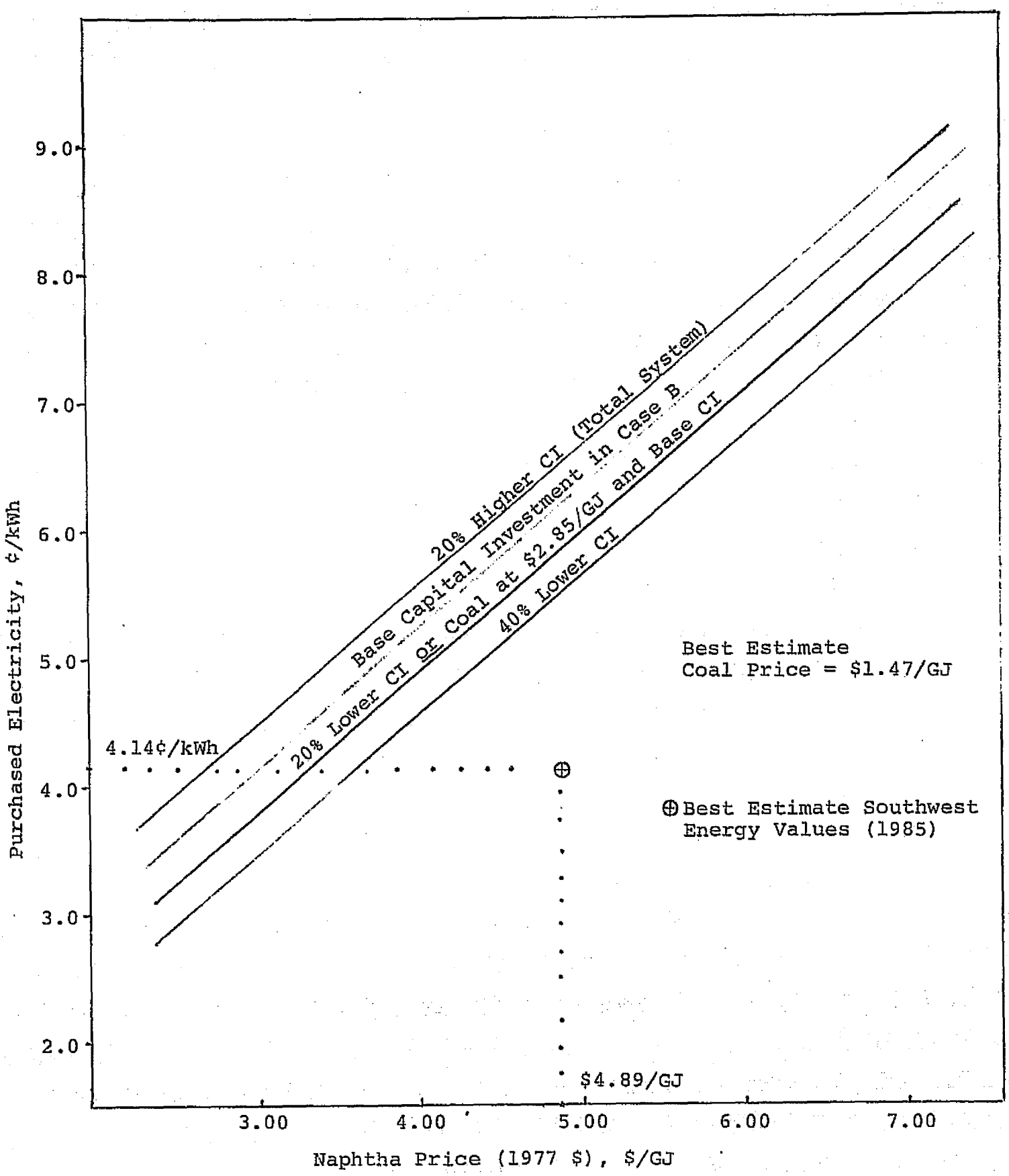

FIGURE 7-3

COPPER REFINERY UTILITY SYSTEM
FUEL AND ELECTRICITY PRICE SENSITIVITY FOR
CASE B FUEL CELL SYSTEM TO BREAK-EVEN
WITH CONVENTIONAL UTILITY SYSTEM (CASE C)

Arthur D Little Inc.

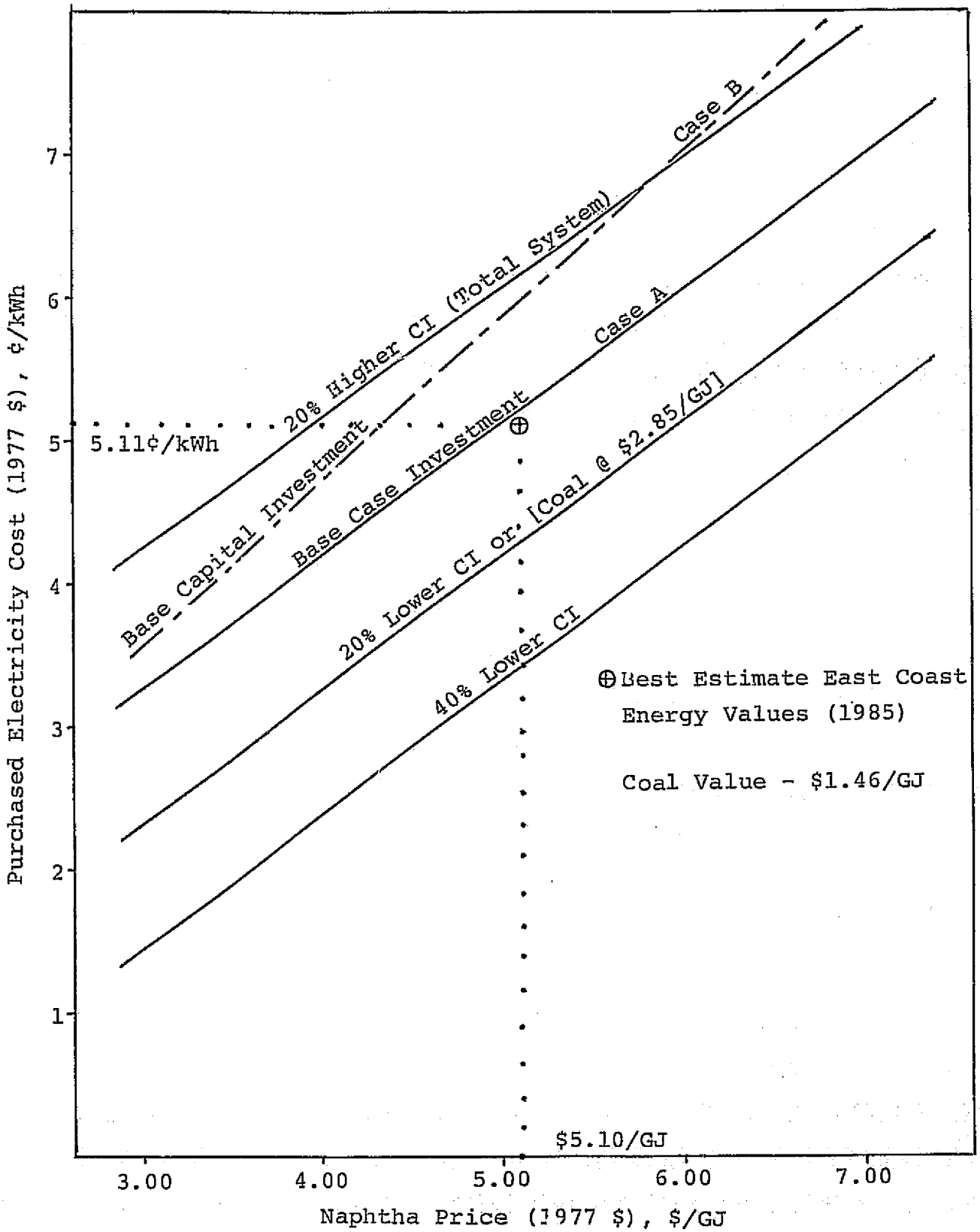

FIGURE 7-4

RECYCLE PAPERBOARD MILL UTILITY SYSTEM
FUEL AND ELECTRICITY PRICE SENSITIVITY FOR
CASE A FUEL CELL SYSTEM TO BREAK-EVEN
WITH CONVENTIONAL UTILITY SYSTEM (CASE C)

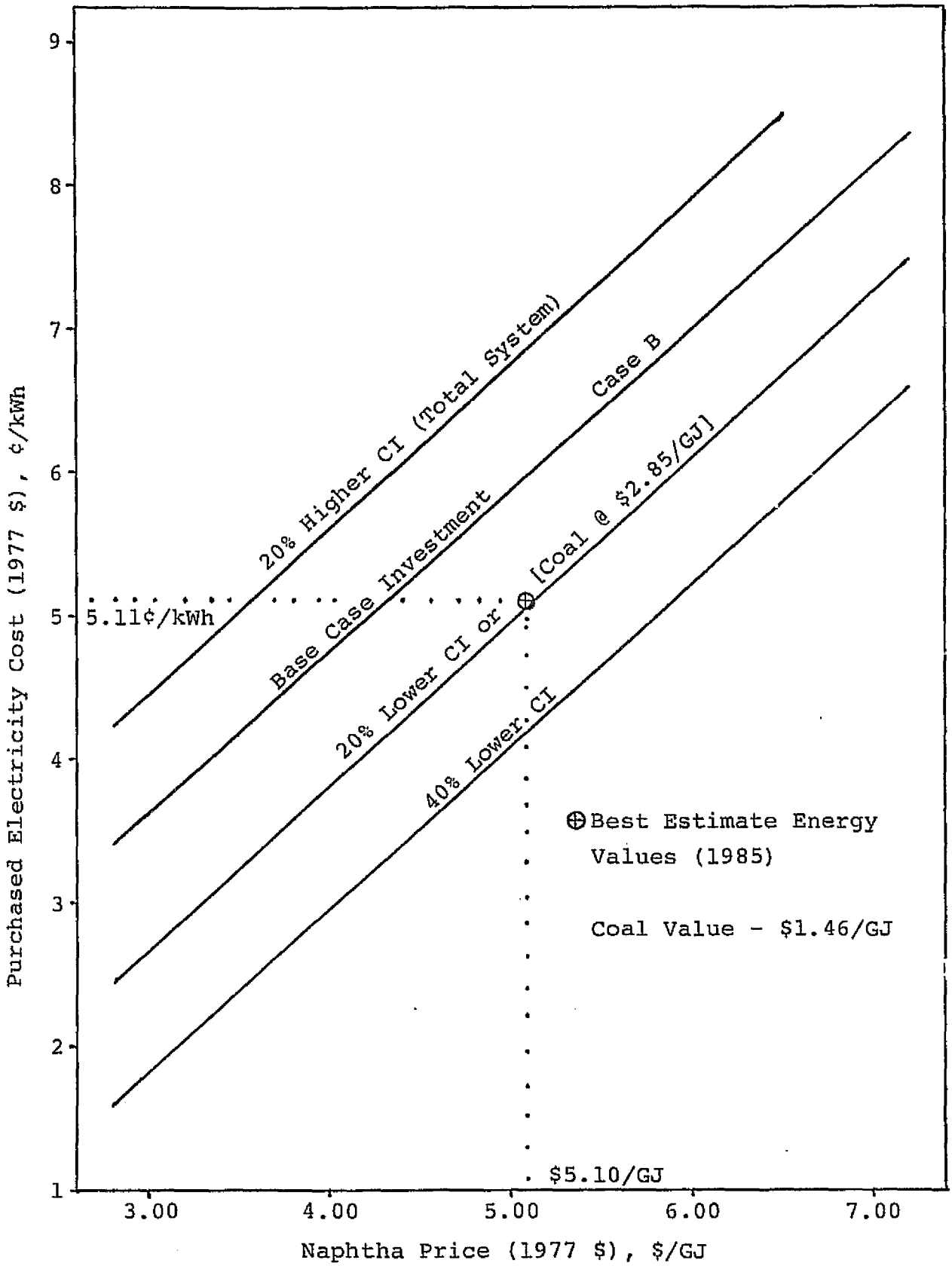

FIGURE 7-5

RECYCLE PAPERBOARD MILL UTILITY SYSTEM
FUEL AND ELECTRICITY PRICE SENSITIVITY FOR
CASE B FUEL CELL SYSTEM TO BREAK-EVEN
WITH CONVENTIONAL UTILITY SYSTEM (CASE C)

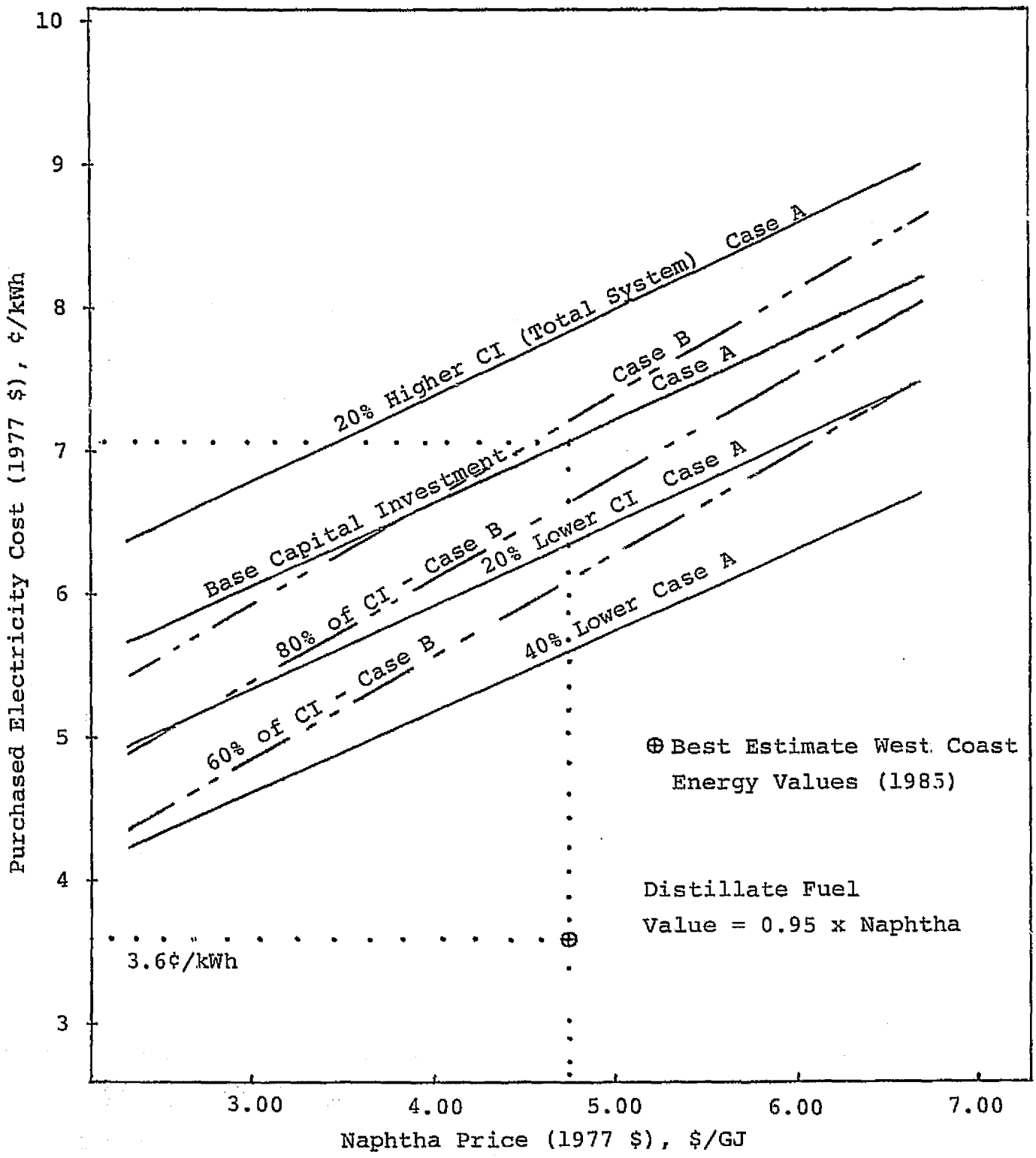

FIGURE 7-6

MEAT PACKING PLANT UTILITY SYSTEM
FUEL AND ELECTRICITY PRICE SENSITIVITY FOR
CASE A AND CASE B FUEL CELL SYSTEMS TO BREAK-EVEN
WITH CONVENTIONAL UTILITY SYSTEM (CASE C)

PRECEDING PAGE BLANK NOT FILMED

8.0 CONCLUSIONS & RECOMMENDATIONS

8.1 CONCLUSIONS

Energy is the dominant cost of fuel cell cogeneration systems, comprising 50-65% of the total levelized annual cost. The annual cost of fuel cell systems is most sensitive to the relative prices of naphtha and electricity. Consequently, fuel cell energy systems are competitive with conventional non-cogeneration systems when purchased electricity cost is high. The fuel cell systems breakeven point with the conventional system was relatively insensitive to coal prices.

In general capital charges are the second largest cost element, comprising about 25% of the levelized cost. A high electric load factor is desirable to reduce the impact of capital requirements. For small scale systems (500 kW), the operating and maintenance costs are about equal to the capital charges with operating labor and stack replacement being the major costs.

A key cost variable in the breakeven analysis is the projected price of electricity purchased from the utility grid. New electricity generating systems owned by private industry should deliver power at a transfer price (after thermal credits) competitive with the utility in order to be attractive. A new industrial generating plant may be at an economic disadvantage due to the fact that local utility power rates reflect:

1. A mix of fuels including hydro, fossil (coal, oil, gas) and nuclear;

2. A lower expected return on investment criterion; and

3. Partially written-off investments made when construction costs in constant dollars were lower.

The higher energy conversion efficiency afforded by the fuel cell is not sufficient, in most cases, to offset these institutionalized economic advantages. This is exacerbated by the fact that the fuel cell requires a relatively high valued fuel. Therefore, the implementation of on-site industrial cogeneration will likely require significant tax credits or tax holidays in order to skew the economics in their favor.

The fuel cell R&D effort should be directed towards development of the higher electrical efficiency machine (Type A) to help offset the relatively high cost of naphtha fuel. The energy systems based on the high electrical efficiency fuel cell have lower annual costs for the expected range of fuel values than systems using Type B version and the costs are less sensitive to naphtha price. With energy prices expected to increase, the annual savings in operating cost will justify the extra investment in the higher efficiency fuel cell. The higher temperature

and pressure available with the Type A cell also offers potential for cost reduction in the design of heat exchange equipment. This is due to a higher thermal driving force and heat transfer coefficient, and more allowable pressure drop.

Fuel cell system capital investment can be reduced by relying on a utility connection for unexpected outage requirements without increasing annual operating costs. This was demonstrated by analysis of Cases D and E which had annual costs similar to Cases A and B. With the electric utility connection one spare fuel cell is economically justified for Type A design and two spares can be justified for the lower cost Type B design.

The size of the steam generators required in the fuel cell system design was not greatly reduced by utilization of power section waste heat. This is a result of matching the fuel cell electrical output to plant electricity demand and utilizing waste heat as available. The peak thermal requirements were such that the heat from the fuel cells was only a small portion of peak thermal demand. As a result, there was little capital investment credit for the fuel cell cogeneration systems.

Temperature level and available pressure drop are limiting factors in the economical recovery of low grade heat from vent streams. Based on a preliminary assessment, the use of direct contact heat exchange appears to reduce capital cost for recovering heat in the form of hot water (71°C). Time did not permit an analysis of life cycle costs.

8.1.1 Copper Refining

The economics of fuel cell systems for this application were marginally unattractive relative to the conventional non-cogeneration system. This was due to offsetting factors of high electric load factor (85%) and low power cost relative to naphtha. The utilization of low grade thermal energy was also the lowest (∿60%) for this design because demand was seasonal. Also, DC power was also not found to be an advantage due to the large voltage variation required to maintain uniform current across banks of electrolytic cells. Consequently, the inverters could not be eliminated as originally thought.

8.1.2 Recycled Paperboard

The economics of fuel cell cogeneration were most favorable for this application, showing an overall cost savings relative to the conventional system. The factors contributing to this outcome include:

- a high electric load factor (80%)
- a high purchased electricity cost
- high thermal load relative to electrical (coal costs dominate)
- capital intensiveness of coal-fired steam generation systems

8.1.3 Meatpacking

The economics of fuel cell cogeneration were not very attractive for this application. One factor contributing to this result is a relatively low (<50%) system load factor due to the cyclic operation of the process plant. Another important factor is the low forecasted power cost at the geographic location of this plant. Finally, the fuel cell system was quite capital-intensive relative to the oil-fired steam generator used in the conventional system design.

8.2 RECOMMENDATIONS

1. Priority should be given to the development of the Type A fuel cell because it is more efficient and affords potential cost benefits for peripheral equipment components.

2. Standardized designs for certain fuel cell system components should be considered to reduce system capital cost through assembly-line production. In particular, the turbocompressor, inverters and power section coolant system heat exchangers are likely candidates, since their design is dictated mostly by the characteristics of the fuel cell and not process interface conditions.

3. The turbocompressor required in our design was relatively expensive since a high efficiency was required to balance energy recovery with air compression requirements. One can trade overall efficiency for lower capital cost by injecting and combusting additional fuel in the vent stream before expansion through the turbine. This trade-off should be evaluated.

4. The use of direct contact heat exchange should be assessed for recovery of low grade waste heat in cogeneration applications. This is particularly recommended for low pressure fuel cell operations.

5. The economics of fuel cell cogeneration should be assessed for a system sized to meet the maximum process thermal load with sales of excess power. This would reduce the investment required in balancing steam boilers and might reduce the cost relative to the conventional system.

6. Since naphtha price is a key factor in the overall cost of fuel cell cogeneration, the sensitivity of naphtha price to various levels of demand should be assessed. This assessment should consider projected naphtha demand based on current uses and incremental demands beyond this level due to fuel cell penetration and SNG production.

APPENDIX A

FEASIBILITY OF DIRECT CONTACT
HEAT EXCHANGE WITH VENT GASES

PRECEDING PAGE BLANK NOT FILMED

For two of the industry applications considered in this study, the hot vent gases from fuel cells and reformers are used to raise the temperature of hot process water. In these applications it may be technically and economically more attractive to use a direct contact heat exchanger rather than a conventional shell-and-tube or compact plate design. To estimate the cost of such devices, we assumed the direct-contact exchangers would be a bubble-cap tray tower design with tray spacings of 18 inches. (Packed columns would be impractical because of the wide variations in gas and liquid flow anticipated in consolidated exchangers.) We envisioned dual towers, each capable of handling 50% of the maximum vent gas flow rate. Heat transfer efficiency was estimated at 50% for bubble- ap trays; baffle trays would have considerably lower efficiencies (20-30%). By graphical analysis of the heat exchange curves, we determined that four or five bubble-cap trays would generally be sufficient. In the meatpacking applications this would mean the use of two towers, each roughly two feet in diameter and nine feet tall. Based on stainless steel construction, the installed cost of these two vessels would be about $37,000; this compares favorably with an estimated cost of $41,000 for a conventional shell-and-tube design. In the recycle paperboard application the direct contact exchangers would be about six feet in diameter and twelve feet tall, and cost approximately $160,000 installed; this compares very favorably with an estimate of $203,000 for the conventional design (Case B). The operating costs of direct contact exchangers will be higher than those of conventional designs, but not sufficiently high to offset their capital cost advantage. Although the numbers quoted above apply to the Case B designs, the economic advantage of direct contact heat exchange should be as equivalent for the Case A designs.

There appear to be no insurmountable technical constraints to the use of direct contact heat exchange in either the meatpacking or recycle paperboard cogeneration systems. The most serious risk is of contamination of the process water by phosphoric acid carry-over in the fuel cell exhaust. As long as this carry-over was not large, it might be neutralized by chemical addition to the hot water storage tanks.

The primary technical benefit of direct contact heat exchange is the potential for lower gas phase pressure drop. This may allow operation of the Type B fuel cells at no more than 3 kPa (gage), whereas an economically sized conventional design may require allowance for a pressure drop of 5 kPa (gage) or more.

PRECEDING PAGE BLANK NOT FILMED

APPENDIX B

UTILITY SYSTEM CAPITAL INVESTMENT BREAKDOWN

TABLE B-1

INDUSTRIAL UTILITIES PLANT
CAPITAL INVESTMENT SUMMARY

Copper Refinery

Design Capacity: 22,000 kw (DC); 248 GJ/h Thermal

Equipment Category	Installed Cost Case A	B	C	D	E
			$(000)		
Fuel Cell (includes reformer)	8,168	7,438	--	6,418	6,375
Combustion Boilers	5,340	4,782	6,130	5,340	4,782
Coal/Ash Storage & Handling	1,450	1,310	1,690	1,450	1,310
FGD System	2,680	2,330	3,230	2,680	2,330
Heat Exchangers	2,265	2,089	440	2,174†	2,017†
Fans and Pumps*	486	634	270	486	634
Turboexpanders	587	--	--	461	--
Naphtha Storage & Handling	69	89	--	69	89
Water Treatment	108	108	108	108	108
Inverters	1,731	1,731	--	1,731	1,731
Transformer	--	--	1,200	--	--
Inert Gas System	218	218	--	218	218
Instrument Air	69	62	75	69	69
Building	360	330	400	360	330
TOTAL FIXED PLANT COST	23,531	21,121	13,543	21,564	19,986
Contingency & Fee @ 20%	4,706	4,224	2,708	4,313	3,997
Working Capital*	277	279	275	277	279
TOTAL CAPITAL INVESTMENT	28,514	25,624	16,526	26,154	24,262

*Fuel inventory; 7 days naphtha; 42 days coal based on average consumption.

†Parent case less cost of coolant exchangers E-1 and E-2 associated with eliminated spare fuel cell modules.

TABLE B-2

INDUSTRIAL UTILITIES PLANT

CAPITAL INVESTMENT SUMMARY

Recycle Paperboard Mill

Design Capacity: 5,415 kw (DC); 163 GJ/h Thermal

Equipment Category	Installed Cost Case A	B	C	D	E
			$(000)		
Fuel Cell (includes reformer)	2,242	2,097	--	1,794	1,887
Combustion Boilers	4,782	4,782	5,340	4,782	4,782
Coal/Ash Storage & Handling	1,354	1,350	1,510	1,354	1,350
FGD System	2,470	2,470	2,850	2,470	2,470
Heat Exchangers	478	443	30	444†	423†
Fans and Pumps*	253	286	243	253	286
Turboexpanders	312	--	--	250	--
Naphtha Storage & Handling	25	32	--	25	32
Water Treatment	57	57	69	57	57
Inverters	532	532	--	532	532
Transformers	--	--	240	--	--
Instrument & Plant Air	62	62	69	62	62
Inert Gas System	64	64	--	64	64
Building	330	330	360	330	330
TOTAL FIXED PLANT COST	12,961	12,505	10,711	12,417	12,275
Contingency & Fee @ 20%	2,592	2,500	2,142	2,483	2,455
Working Capital*	279	284	266	279	284
TOTAL CAPITAL INVESTMENT	15,823	15,289	13,119	15,179	15,014

*Fuel inventory; 7 days naphtha; 42 days coal based on average consumption.

†Parent case less cost of coolant exchangers E-1 and E-2 associated with eliminated spare fuel cell modules.

TABLE B-3

INDUSTRIAL UTILITIES PLANT

CAPITAL INVESTMENT SUMMARY

Meatpacking Plant

Design Capacity: 568 kw (DC); 5 GJ/h Thermal

Equipment Category	Installed Cost Case A	B	C	D	E
			$(000)		
Fuel Cell (includes reformer)	326.6	310.9	---	204.1	194.3
Combustion Boilers & Stacks	37.3	37.3	56.9	37.3	37.3
Heat Exchangers	209.0	141.0	9.0	170.0	106.0
Vessels	71.7	71.7	---	71.7	71.7
Fans and Pumps	12.5	13.9	5.2	12.5	13.9
Turboexpanders	35.9	--	---	22.4	--
Liquid Fuel Storage & Handling*	10.1	11.6	7.4	10.1	11.6
Inverters	64.9	64.9	---	64.9	64.9
Inert Gas System	22.0	22.0	---	22.0	22.0
TOTAL FIXED PLANT COSTS	790.0	680.5	78.5	615.0	521.7
Contingency & Fee @ 20%	158.0	136.1	15.7	123.0	104.3
Working Capital†	18.7	20.6	17.3	18.7	20.6
TOTAL CAPITAL INVESTMENT	966.7	837.2	111.5	756.7	626.6

*including naphtha.

†20 days naphtha fuel inventory.

PRECEDING PAGE BLANK NOT FILMED

APPENDIX C

HEAT EXCHANGER DESIGN AND COST SUMMARIES

TABLE C-1

COPPER REFINING INDUSTRY - CASES A & D
HEAT EXCHANGER DESIGN CONDITIONS

Exchange Number	I/O[a]	Duty (GJ/h)	Area (m^2)	Side	Flow (kg/h)	Temperature (°C) In	Temperature (°C) Out	Pressure (kPa) In
E-1	14/10[c]	8.45	58	Shell	3,629	163	163	662
				Tube	4,270	191	191	1,269
E-2	14/10[c]	0.50	2	Shell	4,270	189	163	1,241
				Tube	2,884	58	100	207
E-3	1/1	4.74	19	Shell	45,350	21	46	241
				Tube	11,338	170	70	621
E-4-1	10/10	0.29	10	Shell	5,925	152	112	131
				Tube	3,418	79	100	207
E-4-2	10/10	0.49	43	Shell	5,925	112	79	121
				Tube	3,418	46	79	207
E-5	10/10	7.15	1,384[b]	Shell	92,061	-13	66	0.5
				Tube	11,850	146	49	131
E-6	10/10	0.21	13[b]	Shell	9,333	49	71	121
				Tube	102	170	170	793
E-7	10/10	12.70	560[b]	Shell	362,800	-7	28	0.25
				Tube	6,200	170	170	793
E-8	1/1	2.62	412[b]	Shell	117,615	54	77	0.75
				Tube	1,283	170	170	793

[a] Installed/operating at peakload.

[b] finned tube total area.

[c] for Case D, only 11 units installed.

TABLE C-2

COPPER REFINING INDUSTRY - CASES B & E
HEAT EXCHANGER DESIGN CONDITIONS

Exchange Number	I/O[a]	Duty (GJ/h)	Area (m^2)	Side	Flow (kg/h)	Temperature (°C) In	Temperature (°C) Out	Pressure (kPa) In
E-1	14/10[c]	11.45	79	Shell	5,025	135	135	310
				Tube	5,517	163	163	662
E-2	14/10[c]	0.64	3	Shell	5,517	163	135	662
				Tube	2,847	46	100	207
E-3	1/1	4.74	19	Shell	45,350	21	46	241
				Tube	11,338	170	70	310
E-4	10/10	0.70	38[b]	Shell	7,618	237	164	3.7
				Tube	3,109	46	100	207
E-5	10/10	10.97	1,560[b]	Shell	138,771	-13	66	0.5
				Tube	15,236	216	49	2.5
E-6	10/10	0.27	17[b]	Shell	12,190	49	71	1.2
				Tube	134	170	170	793
E-7	10/10	10.78	484[b]	Shell	362,800	-1	28	0.2
				Tube	5,278	170	170	793
E-8	1/1	2.22	348[b]	Shell	99,521	54	77	0.7
				Tube	1,086	170	170	793

[a] installed/operating at peak load.

[b] finned tube total area.

[c] for Case E, only 12 units installed.

TABLE C-3

RECYCLE PAPERBOARD INDUSTRY - CASES A & D
HEAT EXCHANGER DESIGN CONDITIONS

Basis: 5415 kw (DC)

Exchange Number	I/O[a]	Duty (GJ/h)	Area (m^2)	Side	Flow (kg/h)	Temperature (°C) In	Temperature (°C) Out	Pressure (kPa) In
E-1	10/7[b]	2.97	21	Shell	1,352	163	163	662
				Tube	1,502	191	189	1,269
E-2	10/7	0.18	1	Shell	2,591	48	66	207
				Tube	1,502	189	163	1,241
E-3	1/1	2.04	11	Shell	18,140	21	48	241
				Tube	3,314	186	38	1,151
E-4	1/1	0.55	30[c]	Shell	22,972	49	71	110
				Tube	276	189	189	1,241
E-5	2/2	9.24	338	Shell	14,584	152	49	131
				Tube	44,191	21	71	172
E-6	1/1	2.22	294[c]	Shell	99,521	54	77	102
				Tube	1,122	189	189	1,241

[a] installed/operating at peak load.

[b] for Case D, only 8 units installed.

[c] finned tube total area.

TABLE C-4

RECYCLE PAPERBOARD INDUSTRY - CASES B & E
HEAT EXCHANGER DESIGN CONDITIONS

Basis: 5415 kw (DC)

Exchange Number	I/O[a]	Duty (GJ/h)	Area (m^2)	Side	Flow (kg/h)	Temperature (°C) In	Temperature (°C) Out	Pressure (kPa) In
E-1	10/7[b]	4.02	28	Shell	1,860	135	135	310
				Tube	1,940	163	162	662
E-2	10/7[b]	0.22	1	Shell	2,591	47	68	207
				Tube	1,940	162	135	648
E-3	1/1	1.98	11	Shell	18,140	21	47	241
				Tube	3,348	179	38	1,062
E-4	1/1	0.82	50[c]	Shell	32,569	63	85	103
				Tube	417	189	189	1,241
E-5	2/2	9.95	245	Shell	18,751	238	63	102
				Tube	47,870	21	71	172
E-6	1/1	2.22	294[c]	Shell	99,521	54	77	102
				Tube	1,122	189	189	1,241

[a] installed/operating at peak load.

[b] for Case E, only 9 units installed.

[c] finned tube total area.

TABLE C-5

MEATPACKING PLANT APPLICATION
DESIGN CONDITIONS

CASES A & D FUEL CELL

Exchange Number	I/O[a]	Duty (GJ/h)	Area (m^2)	Side	Flow (kg/h)	Temperature (°C) In	Temperature (°C) Out	Pressure (kPa) In
E-1	8/5[b]	0.44	2	Shell	254	109	163	690
				Tube	220	191	189	1,269
E-2	8/5	0.02	0	Shell	220	189	163	1,241
				Tube	1,355	81	85	276
E-3	2/2	0.75	80	Shell	1,531	141	61	131
				Tube	3,387	28	81	345
E-4	1/1	0.06	5[c]	Shell	2,560	61	83	110
				Tube	27	163	162	662
E-5	1/1	0.30	1	Shell	1,777	21	62	345
				Tube	764	163	68	662

[a] installed/operating peak load.

[b] for Case D, only 6 units installed.

[c] finned tube total area.

TABLE C-6

MEATPACKING PLANT APPLICATION
DESIGN CONDITIONS

CASE B AND E FUEL CELL

Exchange Number	I/O[a]	Duty (GJ/h)	Area (m^2)	Side	Flow (kg/h)	Temperature (°C) In	Temperature (°C) Out	Pressure (kPa) In
E-1	8/5[b]	0.59	3	Shell	381	109	135	310
				Tube	285	163	162	662
E-2	8/5[b]	0.03	0	Shell	285	162	135	648
				Tube	1,200	78	85	276
E-3	2/2	0.63	21	Shell	1,968	237	71	5.0
				Tube	3,001	28	78	345
E-4	1/1	0.10	13[b]	Shell	3,707	71	93	1.2
				Tube	43	135	134	310
E-5	1/1	0.32	2	Shell	2,577	21	51	345
				Tube	1,108	135	66	310

[a] installed/operating at peak load.

[b] for Case E, only 6 units installed.

[c] finned tube total area.

TABLE C-7

COPPER REFINING INDUSTRY - CASE C
HEAT EXCHANGER DESIGN CONDITIONS

Exchange Number	I/O[a]	Duty (GJ/h)	Area (m^2)	Side	Flow (kg/h)	Temperature (°C) In	Temperature (°C) Out	Pressure (kPa) In
E-1	1/1	4.74	19	Shell	43,921	21	47	276
				Tube	11,338	170	70	793
E-2	1/1	3.44	539[b]	Tube	1,678	170	170	793
				Shell	147,402	54	77	101
E-3	10/10	15.18	657[b]	Tube	7,412	170	170	793
				Shell	362,800	-13	28	101

[a] installed/operating at peakload.

[b] finned tube total area.

TABLE C-8

RECYCLE PAPERBOARD INDUSTRY - CASE C
HEAT EXCHANGER DESIGN CONDITIONS

Basis: 5415 kw

Exchange Number	I/O[a]	Duty (GJ/h)	Area (m^2)	Side	Flow (kg/h)	Temperature (°C) In	Temperature (°C) Out	Pressure (kPa) In
E-1	1/1	1.70	6	Shell	27,210	21	36	207
				Tube	3,401	189	70	1,241
E-2	1/1	2.32	307[b]	Shell	94,750	54	77	102
				Tube	1,175	189	189	82

[a] installed/operating at peak load.

[b] finned tube total area.

TABLE C-10

INDUSTRIAL UTILITIES PLANT
CAPITAL INVESTMENT WORK SHEET

COPPER INDUSTRY - CASES A & D

Item	Exchanger Number	(1) Quantity Installed	(2) FOB Equipment[a] (PEC)	(3) De-escalation Factor	(4) Material Factor 1/(FM)	(5) Direct Cost	(6) Indirect Factor	(7) Bare Module Cost[b] $(000)
Kettle Reboiler[c]	E-1	14	9,218	.9645	1.0	2.30	1.38	395/310
Shell & Tube[d]	E-2	14	683	.9645	1.0	2.30	1.38	29/ 22
Shell & Tube[d]	E-3	1	3,181	.9645	1.0	2.30	1.38	10
Shell & Tube[e]	E-4-1	10	11,340	.9645	.33	2.30	1.38	188
Shell & Tube[e]	E-4-2	10	19,606	.9645	.33	2.30	1.38	325
Crossflow[f]	E-5	10	53,644	.9645	.83	1.36	1.38	894
Crossflow[g]	E-6	10	4,237	.9645	.55	1.36	1.38	61
Crossflow[c]	E-7	10	18,096	.9645	1.0	1.36	1.38	328
Crossflow[g]	E-8	1	24,332	.9645	.55	1.36	1.38	35
TOTAL BARE MODULE COST								2265/2174

[a]Early-1978 basis (purchased cost per unit before material adjustment).

[b]Mid-1977 cost for total number of installed units.

[c]All carbon steel construction.

[d]90-10 CuNi tubes, yellow brass shell.

[e]316 stainless steel shell and tubes.

[f]Carbon steel fins, 316 stainless steel tubes.

[g]316 stainless steel fins and tubes.

(7) = (1) x (2) x (3) x (4) x (5) x (6) + [(2) - (2) x (4)]* (3) (1)

*Differential cost between alloy and carbon steel construction.

Arthur D Little, Inc

TABLE C-11

INDUSTRIAL UTILITIES PLANT
CAPITAL INVESTMENT WORK SHEET

COPPER INDUSTRY - CASES B & E

Item	Exchanger Number	(1) Quantity Installed	(2) FOB Equipment[a] (PEC)	(3) De-escalation Factor	(4) Material Factor 1/(FM)	(5) Direct Cost Factor	(6) Indirect Cost Factor	(7) Bare Module Cost[b] $(000)
Kettle Reboiler[c]	E-1	14	10,992	.9645	1.0	2.30	1.38	471/404
Shell & Tube[d]	E-2	14	847	.9645	1.0	2.30	1.38	36/31
Shell & Tube[d]	E-3	1	3,181	.9645	1.0	2.30	1.38	10
Crossflow[e]	E-4	10	12,183	.9645	.55	1.36	1.38	174
Crossflow[f]	E-5	10	60,459	.9645	.83	1.36	1.38	1007
Crossflow[e]	E-6	10	5,503	.9645	.55	1.36	1.38	79
Crossflow[c]	E-7	10	15,630	.9645	1.0	1.36	1.38	283
Crossflow[e]	E-8	1	20,588	.9645	.55	1.36	1.38	29
TOTAL BARE MODULE COST								2089/2017

[a]Early-1978 basis (purchased cost per unit before material adjustment).

[b]Mid-1977 cost for total number of installed units.

[c]All carbon steel construction.

[d]90-10 CuNi tubes, yellow brass shell.

[e]316 stainless steel fins and tubes.

[f]Carbon steel fins, 316 stainless steel tubes.

(7) = (1) x (2) x (3) x (4) x (5) x (6) + [(2) - (2) x (4)]* (3) (1)

*Differential cost between alloy and carbon steel construction.

Arthur D Little Inc

TABLE C-12

INDUSTRIAL UTILITIES PLANT
CAPITAL INVESTMENT WORK SHEET

COPPER INDUSTRY - CASE C

Item	Exchanger Number	(1) Quantity Installed	(2) FOB Equipment[a] (PEC)	(3) De-escalation Factor	(4) Material Factor 1/(FM)	(5) Direct Cost Factor	(6) Indirect Cost Factor	(7) Bare Module Cost[b] $(000)
Shell & Tube[c]	E-1	1	3,181	.9645	1.0	2.30	1.38	10
Crossflow[d]	E-2	1	31,853	.9645	.55	1.36	1.38	46
Crossflow[e]	E-3	10	21,216	.9645	1.0	1.36	1.38	384
TOTAL BARE MODULE COST								440

[a]Early-1978 basis (purchased cost per unit before material adjustment).

[b]Mid-1977 cost for total number of installed units.

[c]90-10 CuNi tubes, yellow brass shell.

[d]316 stainless steel fins and tubes.

[e]All carbon steel construction.

(7) = (1) x (2) x (3) x (4) x (5) x (6) + [(2) - (2) x (4)]* (3) (1)

*Differential cost between alloy and carbon steel construction.

TABLE C-13

INDUSTRIAL UTILITIES PLANT
CAPITAL INVESTMENT WORK SHEET

RECYCLE PAPERBOARD INDUSTRY - CASE A & D

Item	Exchanger Number	(1) Quantity Installed	(2) FOB Equipment[a] (PEC)	(3) De-escalation Factor	(4) Material Factor 1/(FM)	(5) Direct Cost	(6) Indirect Factor	(7) Bare Module Cost[b] $(000)
Kettle Reboiler[c]	E-1	10	5,091	.9645	1.0	2.30	1.38	156/124
Shell & Tube[d]	E-2	10	456	.9645	1.0	2.30	1.38	14/11
Shell & Tube[d]	E-3	1	2,300	.9645	1.0	2.30	1.38	7
Crossflow[e]	E-4	1	9,446	.9645	.55	1.36	1.38	14
Shell & Tube[f]	E-5	2	79,150	.9645	.33	2.30	1.38	262
Crossflow[e]	E-6	1	17,371	.9645	.55	1.36	1.38	25
TOTAL BARE MODULE COST								478/443

[a]Early-1978 basis (purchased cost per unit before material adjustment).

[b]Mid-1977 cost for total number of installed units.

[c]All carbon steel construction.

[d]90-10 CuNi tubes, yellow brass shell.

[e]316 stainless steel fins and tubes.

[f]316 stainless steel shell and tubes.

(7) = (1) x (2) x (3) x (4) x (5) x (6) + [(2) - (2) x (4)]* (3) (1)

*Differential cost between alloy and carbon steel construction.

Arthur D Little, Inc

TABLE C-14

INDUSTRIAL UTILITIES PLANT
CAPITAL INVESTMENT WORK SHEET

RECYCLE PAPERBOARD INDUSTRY - CASE B & E

Item	Exchanger Number	(1) Quantity Installed	(2) FOB Equipment[a] (PEC)	(3) De-escalation Factor	(4) Material Factor 1/(FM)	(5) Direct Cost Factor	(6) Indirect Cost Factor	(7) Bare Module Cost[b] $(000)
Kettle Reboiler[c]	E-1	10	6,070	.9645	1.0	2.30	1.38	186/167
Shell & Tube[d]	E-2	10	527	.9645	1.0	2.30	1.38	16/14
Shell & Tube[d]	E-3	1	2,300	.9645	1.0	2.30	1.38	7
Crossflow[e]	E-4	1	3,907	.9645	.55	1.36	1.38	6
Shell & Tube[f]	E-5	2	61,245	.9645	.33	2.30	1.38	203
Crossflow[e]	E-6	1	17,371	.9645	.55	1.36	1.38	25
TOTAL BARE MODULE COST								443/422

[a]Early-1978 basis (purchased cost per unit before material adjustment).

[b]Mid-1977 cost for total number of installed units.

[c]All carbon steel construction.

[d]90-10 CuNi tubes, yellow brass shell.

[e]316 stainless steel fins and tubes.

[f]316 stainless steel shell and tubes.

(7) = (1) x (2) x (3) x (4) x (5) x (6) + [(2) - (2) x (4)]* (3) (1)

*Differential cost between alloy and carbon steel construction.

Arthur D Little Inc.

TABLE C-15

INDUSTRIAL UTILITIES PLANT
CAPITAL INVESTMENT WORK SHEET

RECYCLE PAPERBOARD INDUSTRY - CASE C

Item	Exchanger Number	(1) Quantity Installed	(2) FOB Equipment[a] (PEC)	(3) De-escalation Factor	(4) Material Factor 1/(FM)	(5) Direct Cost Factor	(6) Indirect Cost Factor	(7) Bare Module Cost[b] $(000)
Shell & Tube[c]	E-1	1	1,334	.9645	1.0	2.30	1.38	4
Crossflow[d]	E-2	1	18,150	.9645	.55	1.36	1.38	26
TOTAL BARE MODULE COST								30

[a]Early-1978 basis (purchased cost per unit before material adjustment).

[b]Mid-1977 cost for total number of installed units.

[c]90-10 CuNi tubes, yellow brass shell.

[d]316 stainless steel fins and tubes.

(7) = (1) x (2) x (3) x (4) x (5) x (6) + [(2) - (2) x (4)]* (3) (1)

*Differential cost between alloy and carbon steel construction.

Arthur D Little, Inc

TABLE C-16

INDUSTRIAL UTILITIES PLANT
CAPITAL INVESTMENT WORK SHEET

MEATPACKING INDUSTRY - CASE A

Item	Exchanger Number	(1) Quantity Installed	(2) FOB Equipment[a] (PEC)	(3) De-escalation Factor	(4) Material Factor 1/(FM)	(5) Direct Cost Factor	(6) Indirect Cost Factor	(7) Bare Module Cost[b] $(000)
Kettle Reboiler[c]	E-1	8	4,066	.9645	1.0	2.30	1.38	100
Shell & Tube[d]	E 2	8	265	.9645	1.0	2.30	1.38	7
Shell & Tube[e]	E-3	2	29,461	.9645	.33	2.30	1.38	98
Crossflow[f]	E-4	1	1,560	.9645	.55	1.36	1.38	2
Shell & Tube[d]	E-5	1	649	.9645	1.0	2.30	1.38	2
TOTAL BARE MODULE COST								209

[a]Early-1978 basis (purchased cost per unit before material adjustment).

[b]Mid-1977 cost for total number of installed units.

[c]All carbon steel construction.

[d]90-10 CuNi tubes, yellow brass shell.

[e]316 stainless steel shell and tubes.

[f]316 stainless steel fins and tubes.

(7) = (1) x (2) x (3) x (4) x (5) x (6) + [(2) - (2) x (4)]* (3) (1)

*Differential cost between alloy and carbon steel construction.

TABLE C-17

INDUSTRIAL UTILITIES PLANT
CAPITAL INVESTMENT WORK SHEET

MEATPACKING INDUSTRY - CASE B

Item	Exchanger Number	(1) Quantity Installed	(2) FOB Equipment[a] (PEC)	(3) De-escalation Factor	(4) Material Factor 1/(FM)	(5) Direct Cost	(6) Indirect Factor	(7) Bare Module Cost[b] $(000)
Kettle Reboiler[c]	E-1	8	3,451	.9645	1.0	2.30	1.38	85
Shell & Tube[d]	E-2	8	286	.9645	1.0	2.30	1.38	7
Shell & Tube[e]	E-3	2	12,423	.9645	.33	2.30	1.38	41
Crossflow[f]	E-4	1	4,179	.9645	.55	1.36	1.38	6
Shell & Tube[d]	E-5	1	683	.9645	1.0	2.30	1.38	2
TOTAL BARE MODULE COST								141

[a]Early-1978 basis (purchased cost per unit before material adjustment).

[b]Mid-1977 cost for total number of installed units.

[c]All carbon steel construction.

[d]90-10 CuNi tubes, yellow brass shell.

[e]316 stainless steel shell and tubes.

[f]316 stainless steel fins and tubes.

(7) = (1) x (2) x (3) x (4) x (5) x (6) + [(2) - (2) x (4)]* (3) (1)

*Differential cost between alloy and carbon steel construction.

Arthur D Little, Inc

TABLE C-18

INDUSTRIAL UTILITIES PLANT
CAPITAL INVESTMENT WORK SHEET

MEATPACKING INDUSTRY - CASE C

Item	Exchanger Number	(1) Quantity Installed	(2) FOB Equipment[a] (PEC)	(3) De-escalation Factor	(4) Material Factor 1/(FM)	(5) Direct Cost Factor	(6) Indirect Cost Factor	(7) Bare Module Cost[b] $(000)
Shell & Tube[c]	E-1	1	1,395	.9645	1.0	2.30	1.38	4
Shell & Tube[c]	E-2	1	944	.9645	1.0	2.30	1.38	3
Shell & Tube[c]	E-3	1	649	.9645	1.0	2.30	1.38	2
TOTAL BARE MODULE COST								9

[a]Early-1978 basis (purchased cost per unit before material adjustment).

[b]Mid-1977 cost for total number of installed units.

[c]90-10 CuNi tubes, yellow brass shell.

(7) = (1) x (2) x (3) x (4) x (5) x (6) + [(2) - (2) x (4)]* (3) (1)

*Differential cost between alloy and carbon steel construction.

PRECEDING PAGE BLANK NOT FILMED

APPENDIX D

LIST OF EQUIPMENT SUPPLIERS

(The equipment suppliers listed in this appendix were contacted to obtain purchased price estimates for major equipment items.)

COAL-FIRED BOILERS:	Riley Stoker Corporation Boston, Massachusetts Head Office Address: P.O. Box 547 Worcester, Massachusetts
OIL-FIRED BOILERS:	York Shipley, Inc. P.O. Box 349 York, Pennsylvania
COAL HANDLING:	Donovan Engineering & Construction Co., Inc. Park Square Building Boston, MA 02116
ASH HANDLING:	A. W. Banister 21 Charles Street Cambridge, MA 02141
ROTATING EQUIPMENT:	<u>Induced Draft Fans</u> B & P Industries 120 Central Street Hudson, MA 01749 For Green Fan Company Beacon, NY <u>Feed Pumps</u> Ingersol Rand Company 65 William Street Wellesley, Massachusetts
WATER TREATMENT:	Hungerford & Terry Braintree, Massachusetts Head Office: Clayton, NJ
INSTRUMENT & COMPRESSED AIR:	Chicago Pneumatic Franklin, Pennsylvania Calspan Technology Products Buffalo, NY By Energy Machinery Company S. Weymouth, Massachusetts

HEAT EXCHANGE EQUIPMENT:	Aerofin Corporation Lynchburg, Virginia
	American Standard Heat Transfer Division Buffalo, NY
	Manning and Lewis Engineering Company Union, NJ
	McQuay-Perfex, Inc. Perfex Group Milwaukee, Wisconsin
	Therma Technology, Inc. Happy Division Tulsa, Oklahoma
FUEL STORAGE TANKS:	Craftsman Construction Corporation Winchester, Massachusetts

PRECEDING PAGE BLANK NOT FILMED

APPENDIX E

EQUIPMENT AND LAYOUT DRAWINGS

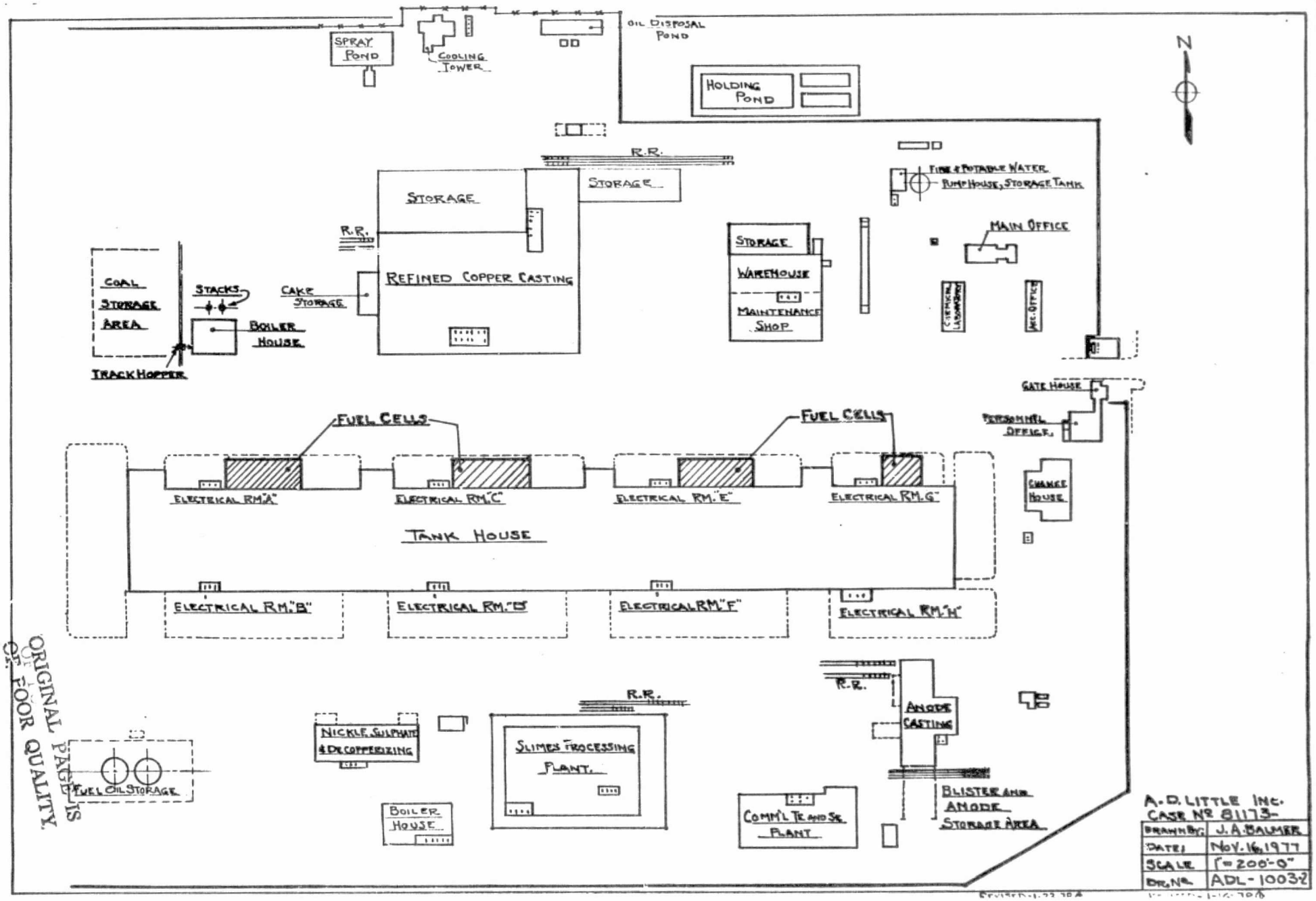

FIGURE E-1 PLOT PLAN
ELECTROLYTIC COPPER REFINERY

ORIGINAL PAGE IS OF POOR QUALITY

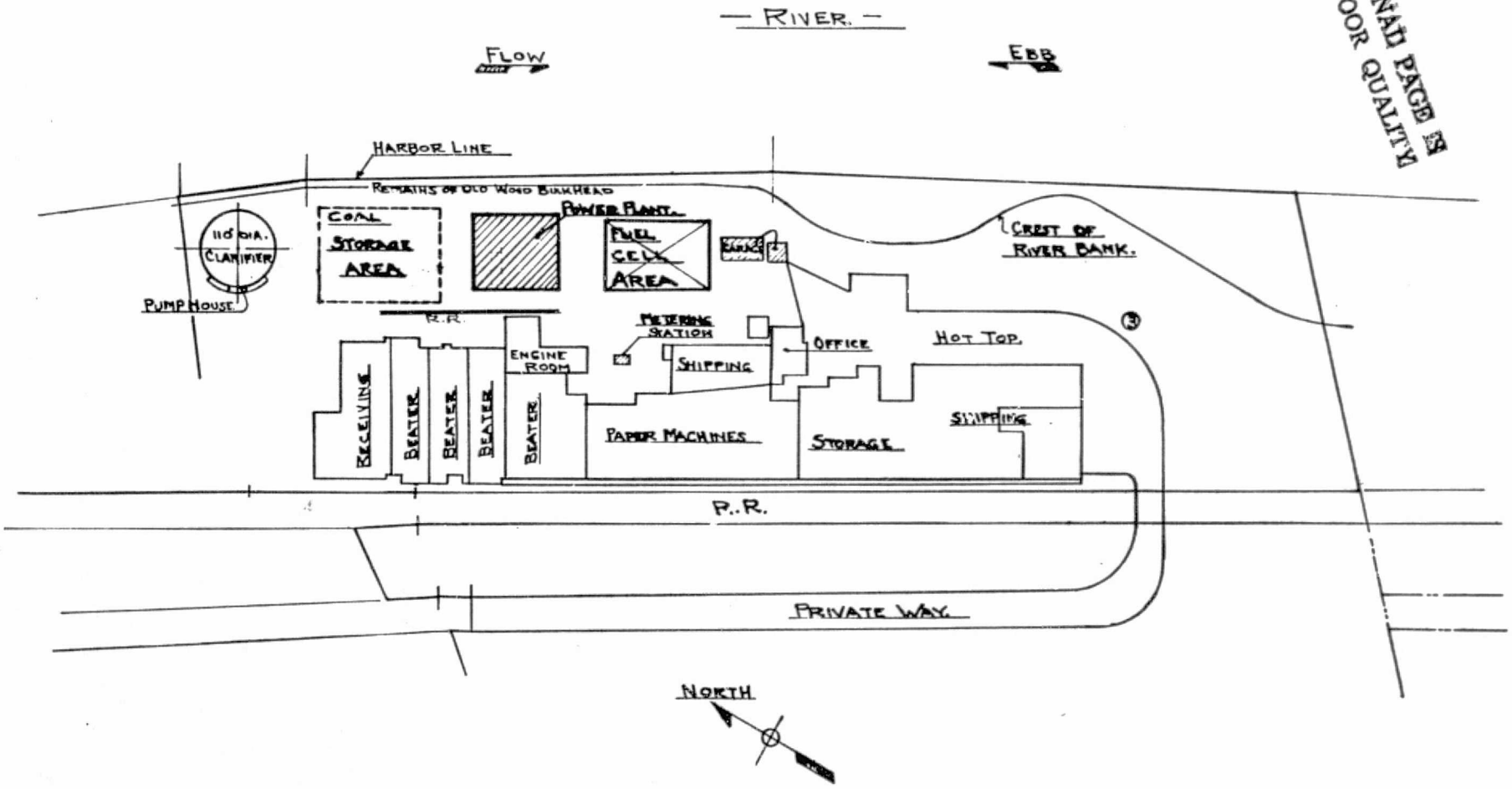

FIGURE E-2 PLOT PLAN
RECYCLE PAPERBOARD MILL

A.D. LITTLE INC. CASE NO. 81173-	
DRAWN BY:	J.A. BALMER
DATE:	NOV. 10, 1977
SCALE	1" = 150'-0"
DR. NO.	ADL - 1002-2

2-REVISED 1-31-78 1-REVISED 1-28-78

ORIGINAL PAGE IS OF POOR QUALITY

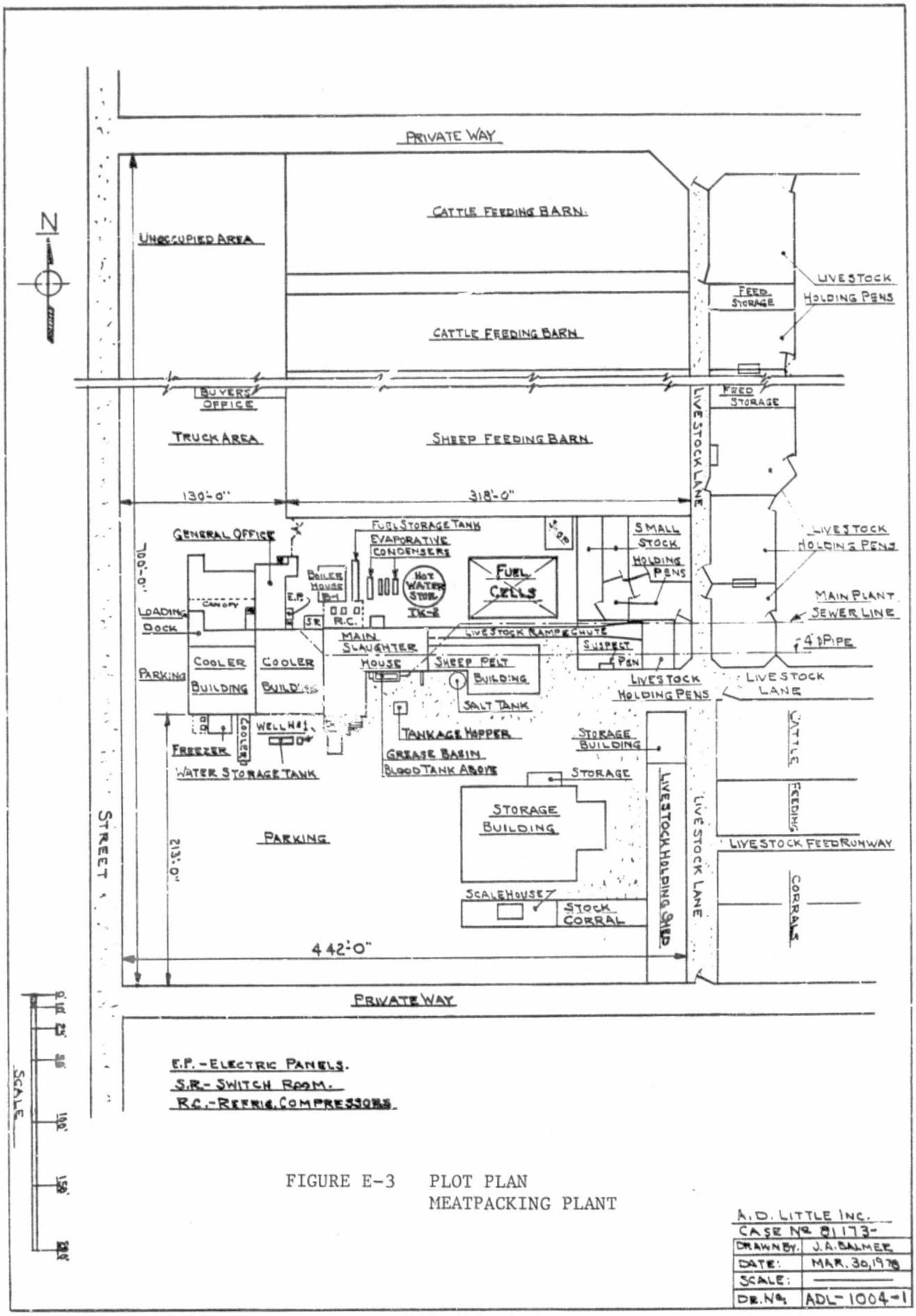

FIGURE E-3 PLOT PLAN
MEATPACKING PLANT

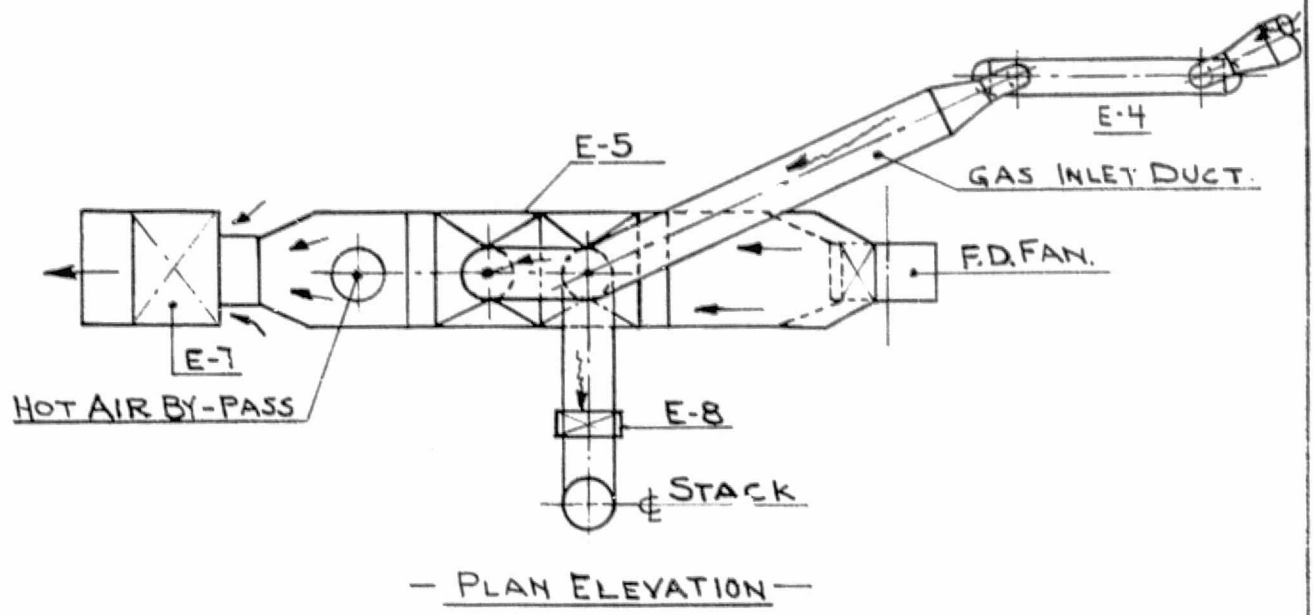

— PLAN ELEVATION —

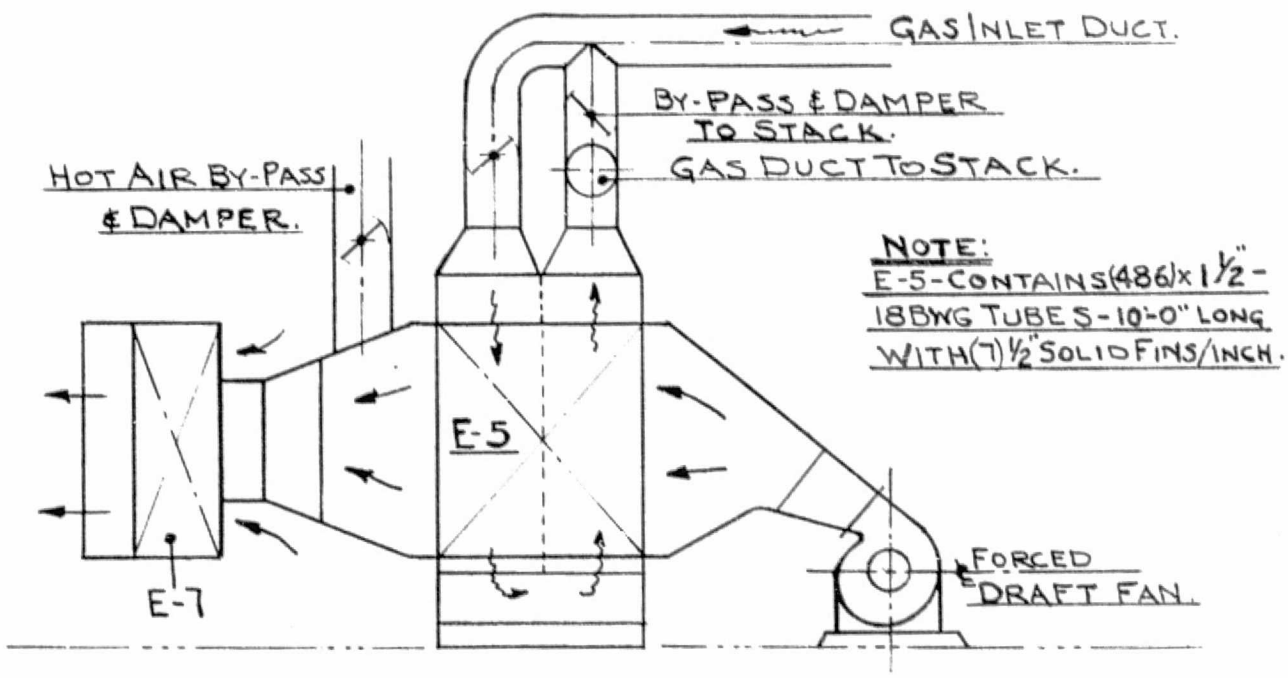

— SIDE ELEVATION —

FIGURE E-4 EXCHANGE E-5 DETAIL

A.D. LITTLE INC.
CASE No. 81173-

DRAWN BY	J. A. BALMER
DATE:	MAR. 17, 1978
SCALE:	1/8" - 1'-0"
DR. No.	ADL-1012-2

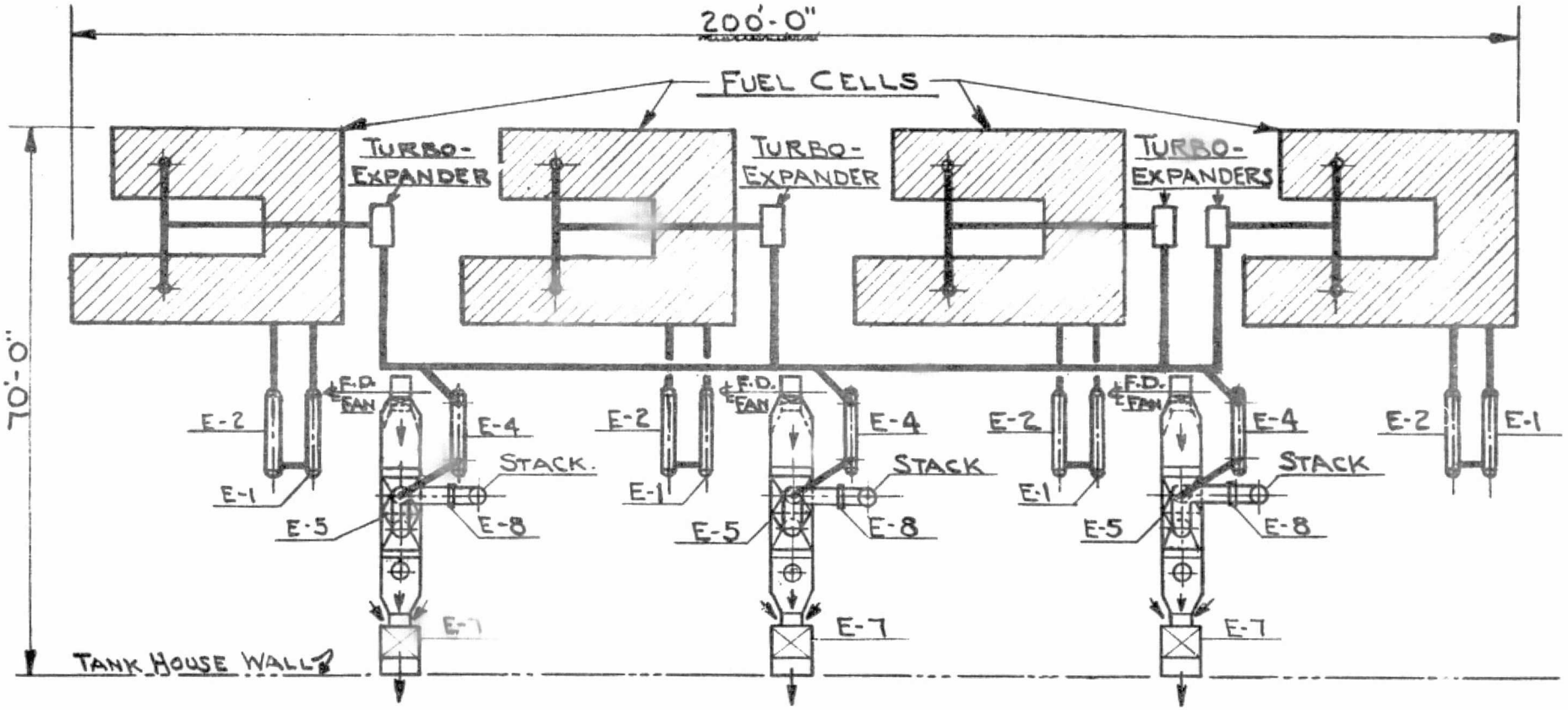

FIGURE E-5 FUEL CELL SCHEMATIC ARRANGEMENT
COPPER REFINERY

A. D. LITTLE INC.
CASE NO. 81173-

DRAWN BY.	J. A. BALMER
DATE:	MAR. 25, 1978
SCALE:	1" = 20'-0"
DR. NO.	ADL 1005-4

ORIGINAL PAGE IS OF POOR QUALITY

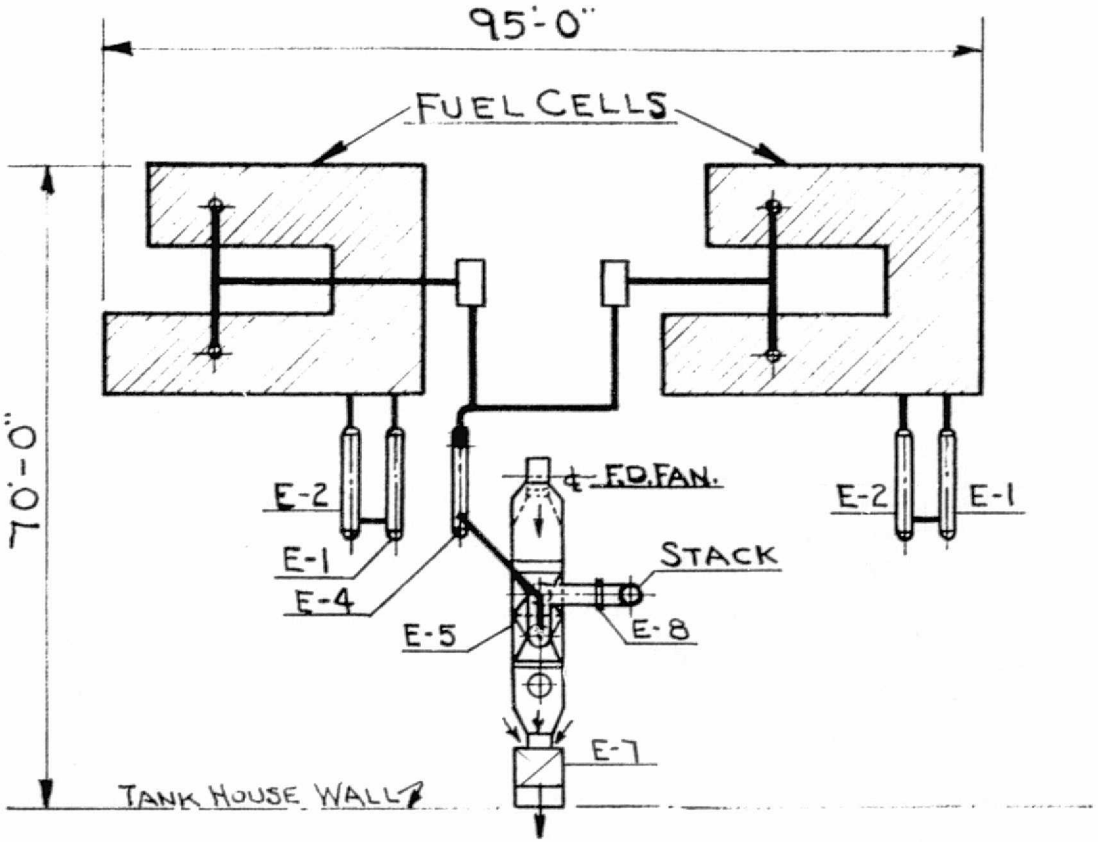

FIGURE E-6 FUEL CELL SCHEMATIC ARRANGEMENT
COPPER REFINERY

A. D. LITTLE INC.
CASE Nº. 81173-

DRAWN BY	J.A. BALMER
DATE:	JAN-23.1978
SCALE:	1" = 20'-0"
DR. Nº.	ADL-1006-3

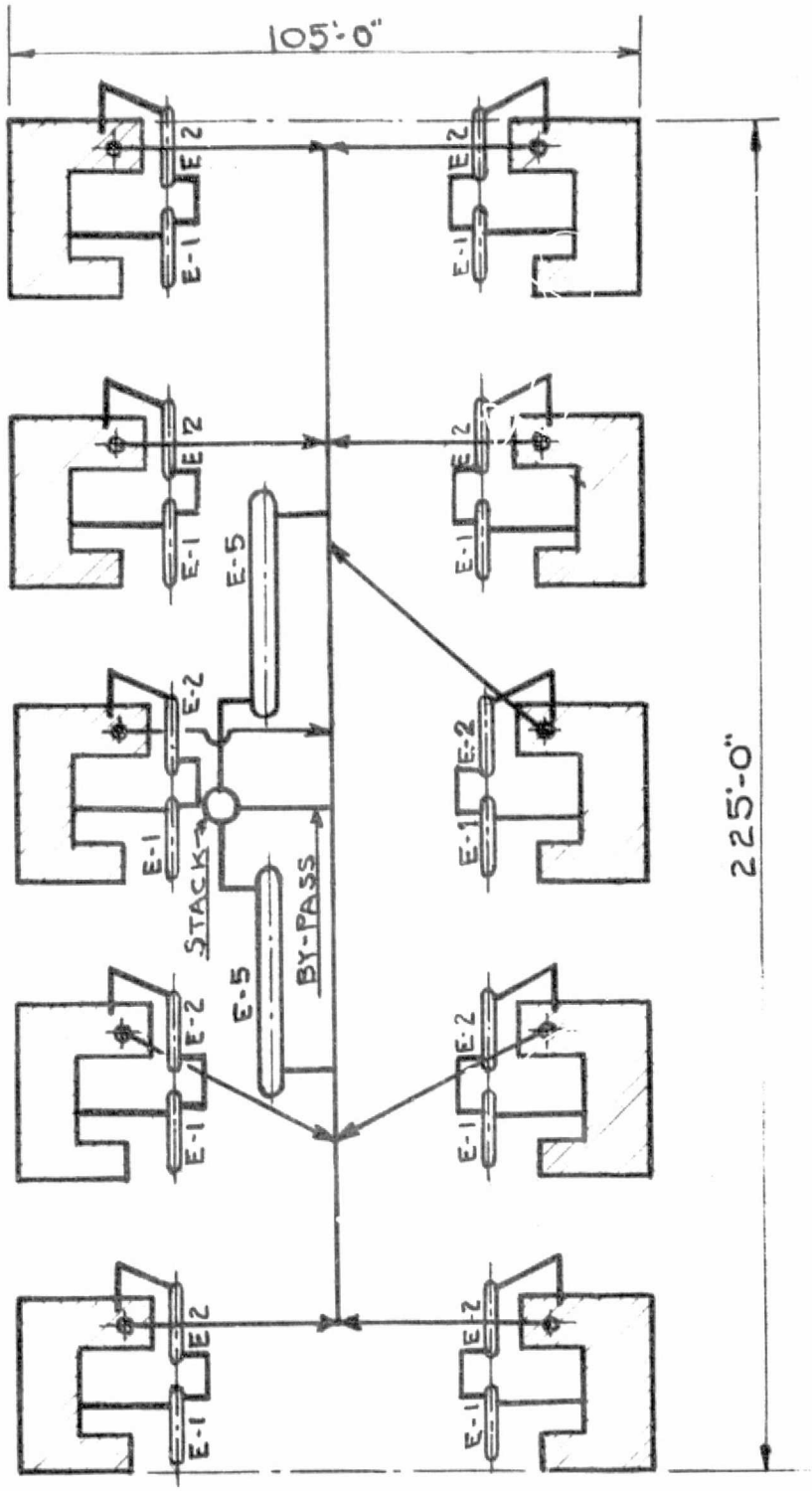

FIGURE E-7 10-FUEL CELLS
SCHEMATIC ARRANGEMENT
RECYCLE PAPERBOARD MILL

A. D. LITTLE INC.
CASE Nº 81173-

DRAWN BY:	J. A. BALMER
DATE:	FEB. 2. 1978
SCALE	1" = 30'-0"
DR. Nº.	ADL-1010-1

ORIGINAL PAGE IS
OF POOR QUALITY

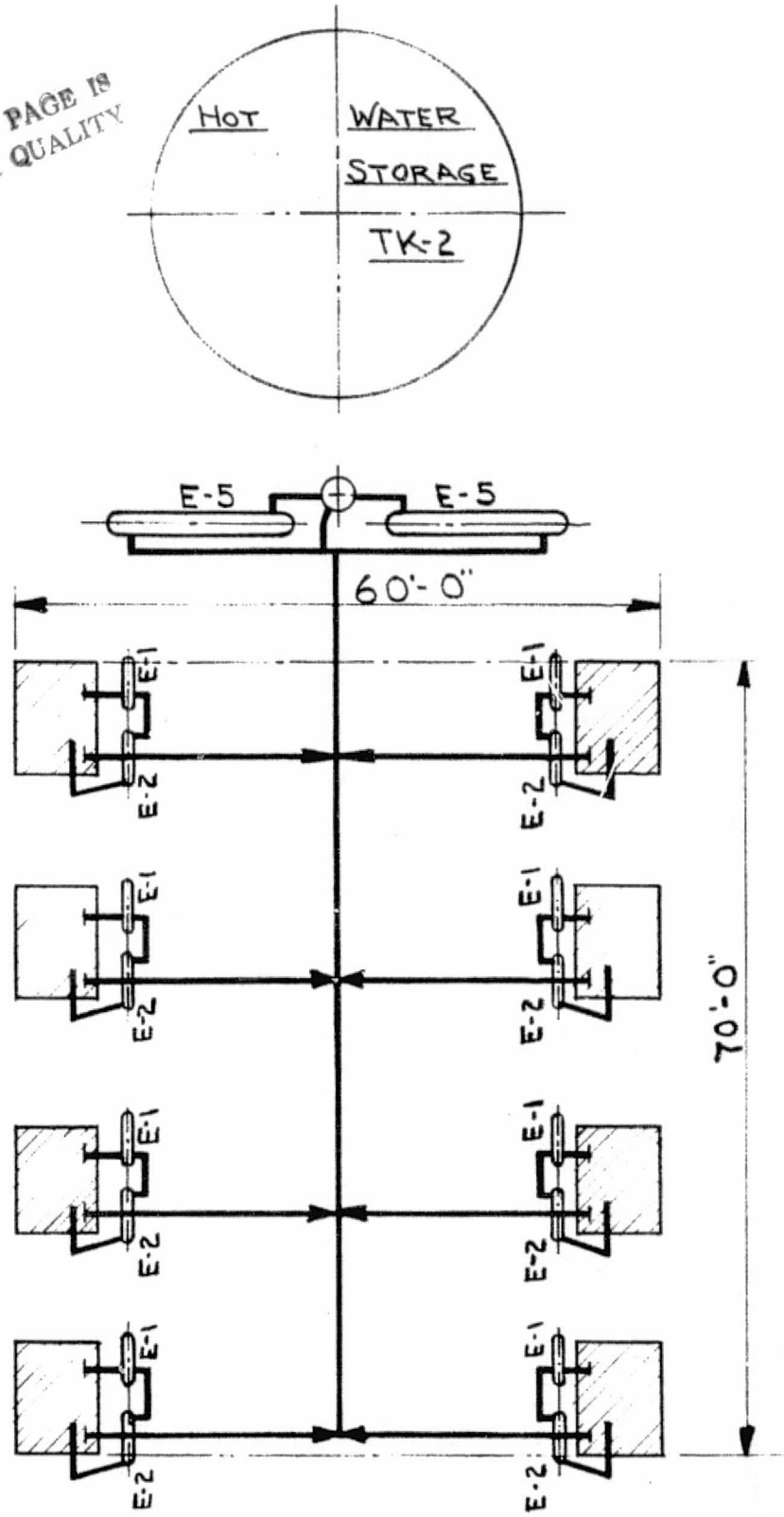

FIGURE E-8 8-FUEL CELLS
SCHEMATIC ARRANGEMENT
MEATPACKING PLANT

A. D. LITTLE INC.
CASE Nº 81173-

DRAWN BY:	J. A. BALMER
DATE:	FEB. 4, 1978
SCALE:	1" = 15'-0"
DR. Nº	ADL-1011-2

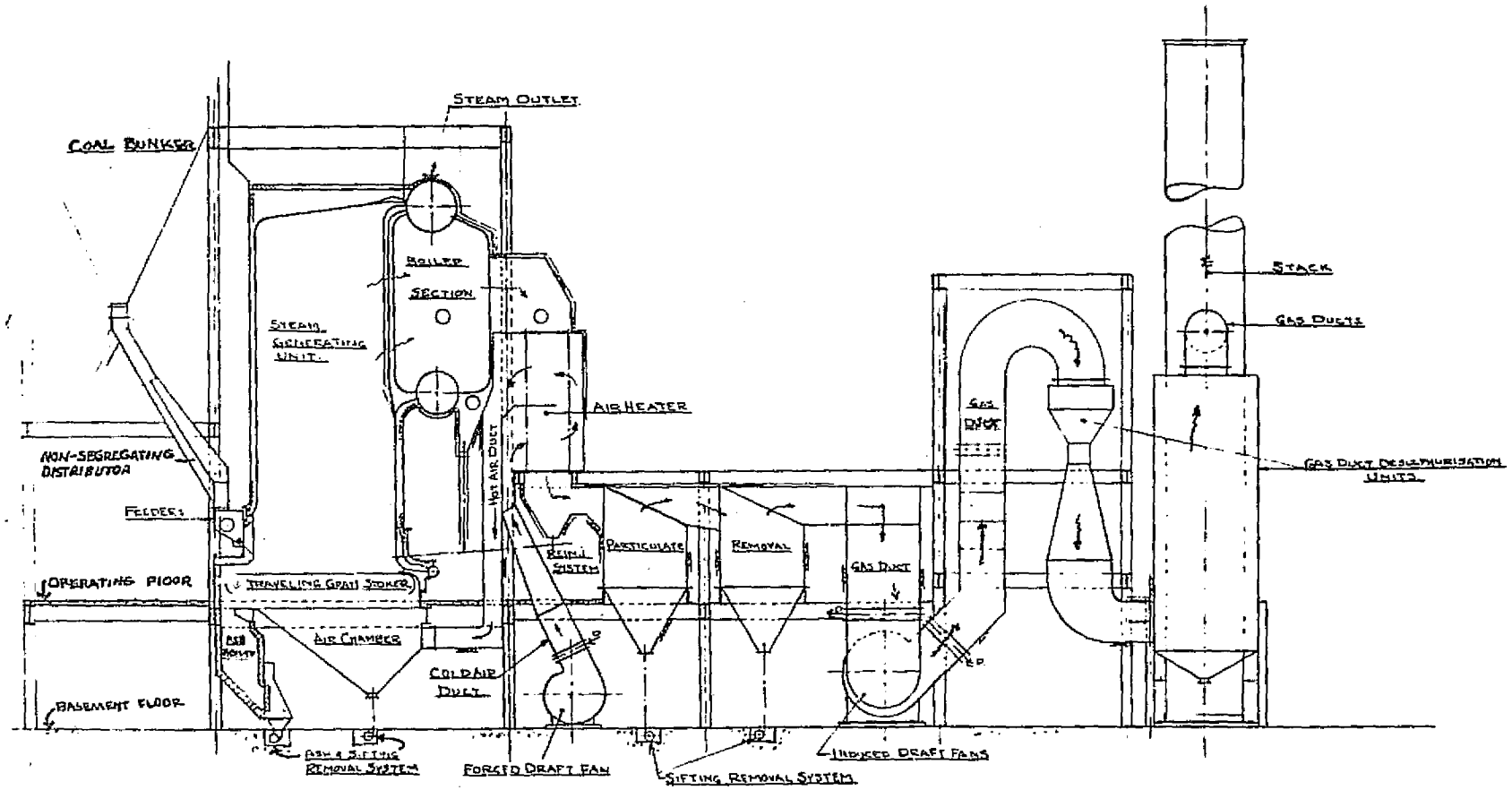

A.D.LITTLE
CASE No. B11

DRAWN BY	J.A.BL
DATE	JAN 30, 1
SCALE	1/8" = 1'-0"
DRG. No	ADL-1007-2

FIGURE E-9 TYPICAL SIDE ELEVATION STEAM GENERATING UNITS

ORIGINAL PAGE IS OF POOR QUALITY

ORIGINAL PAGE IS
OF POOR QUALITY

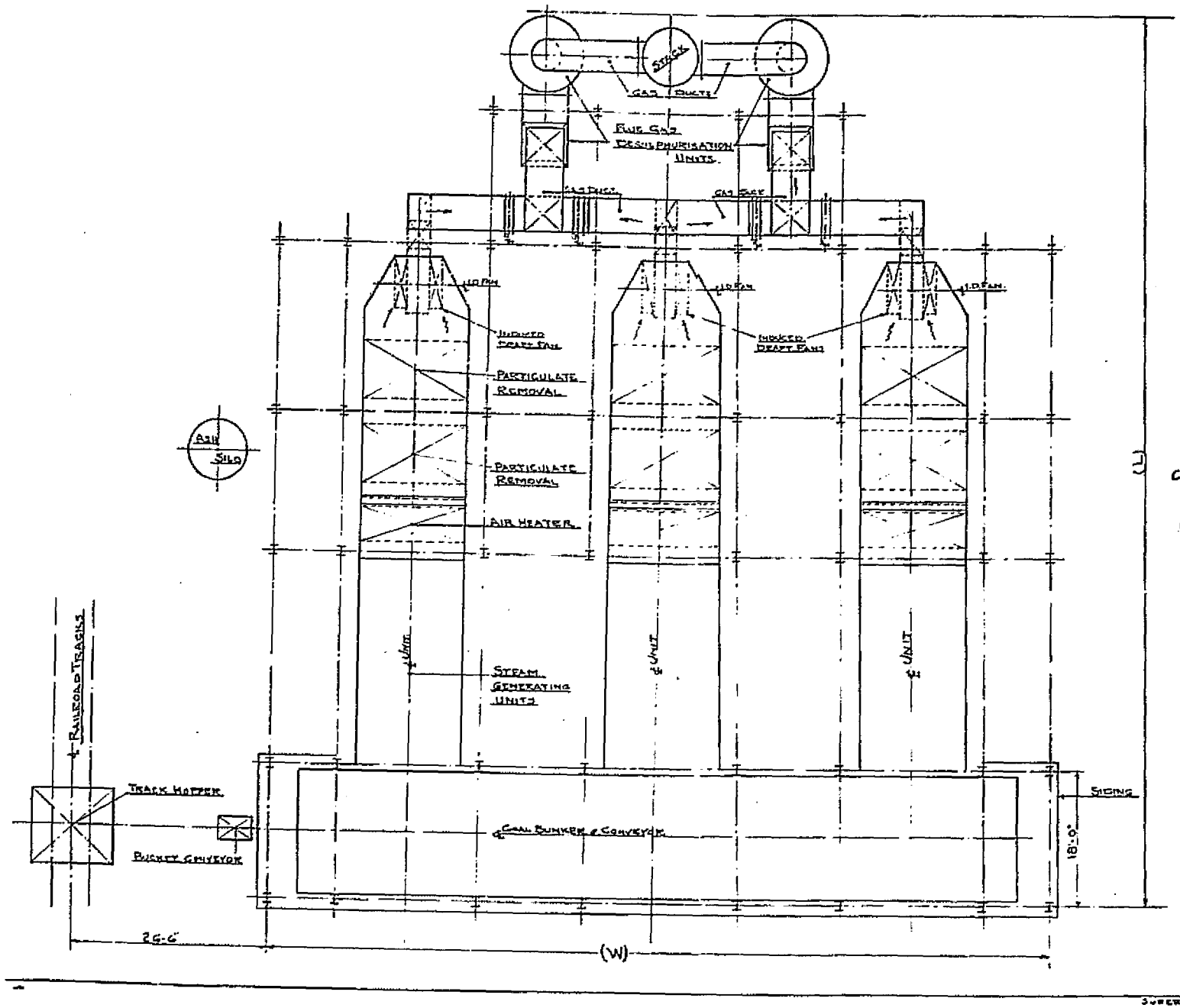

	CASE	A	B	C
COPPER	L	110'-0"	110'-0"	115'-0"
	W	95'-0"	103'-0"	103'-0"
	CASE	A	B	C
PAPER	L	110	110	110
	W	95	95	103

A.D. LITTLE INC.
CASE NO. B1173
DRAWN BY J.A. BAUMER
DATE JAN 30, 1978
SCALE 1/8" = 1'-0"
DWG NO. ADL-1008-2

FIGURE E-10 PLAN VIEW
STEAM GENERATING UNITS

ORIGINAL PAGE IS
OF POOR QUALITY

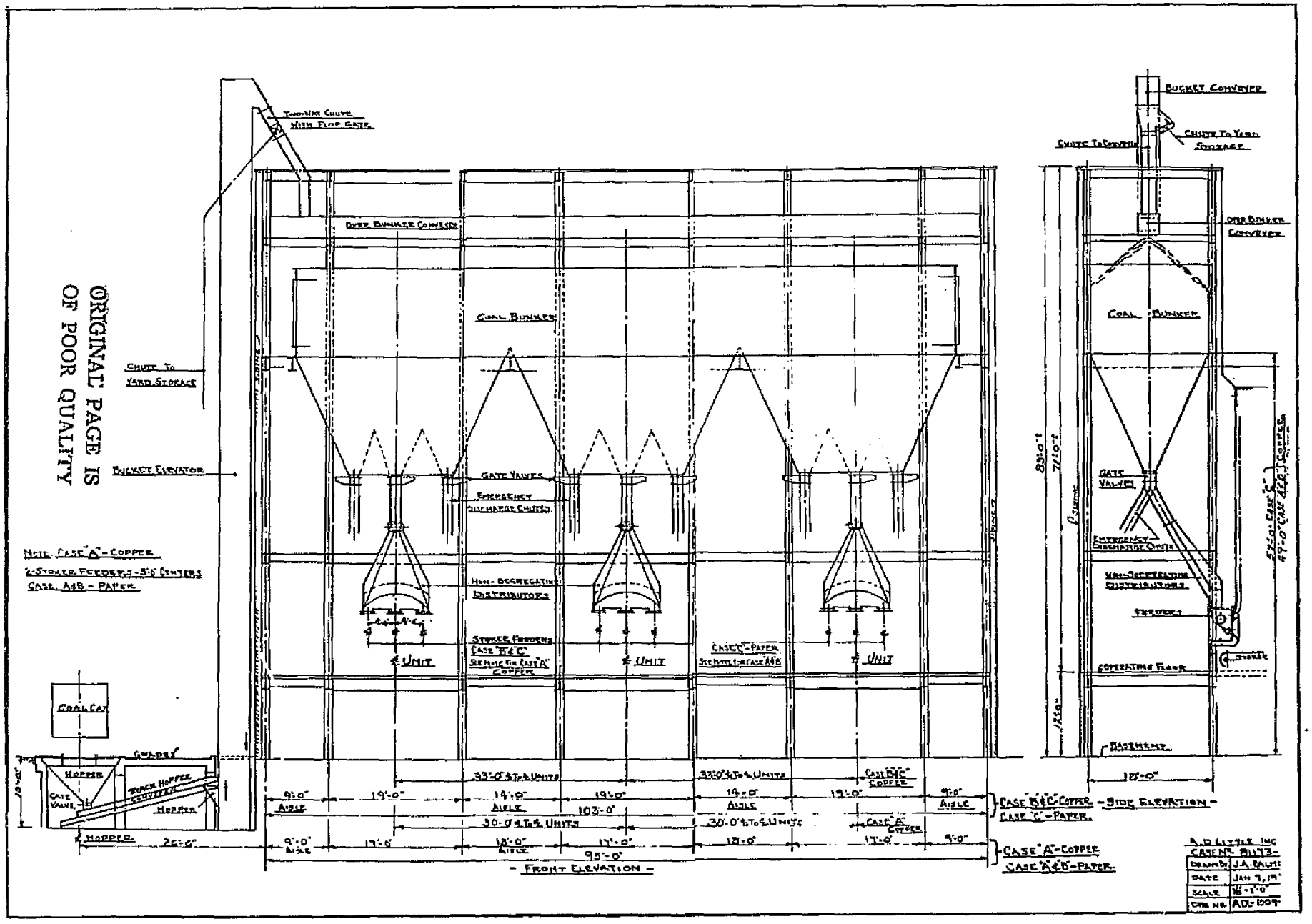

FIGURE E-11 COAL HANDLING SYSTEM & BUNKER

APPENDIX F

UTILITY LOAD PROFILES
USED IN COMPUTER SIMULATIONS

PRECEDING PAGE BLANK NOT FILMED

TABLE F-1

UTILITY LOAD PROFILES
(Net to Process Plant)

ELECTROLYTIC COPPER REFINERY

Time	Steam, 10^3 kg/h				Electricity, kW	
	Hot Day	Warm Day	Cool Day	Cold Day	Weekday	Weekend
8-9	22.7	29.9	45.4	61.2	19,500	15,750
9-10	22.7	29.0	40.8	52.2	19,250	15,250
10-11	22.7	28.1	36.3	43.1	19,750	15,250
11-12	22.7	27.7	34.0	38.6	19,500	15,250
12-13	22.7	27.2	31.8	34.0	20,000	15,500
13-14	22.7	27.2	31.8	34.0	20,250	14,500
14-15	22.7	27.2	31.8	34.0	19,750	15,000
15-16	22.7	27.2	31.8	34.0	18,750	14,500
16-17	22.7	27.2	31.8	34.0	20,000	14,500
17-18	22.7	27.2	31.8	34.0	19,250	15,500
18-19	22.7	27.2	31.8	34.0	19,750	16,000
19-20	22.7	27.4	32.9	36.3	18,750	15,500
20-21	22.7	27.7	34.0	38.6	18,500	15,000
21-22	22.7	27.9	35.2	40.8	17,750	14,500
22-23	22.7	28.1	36.3	43.1	18,500	15,500
23-24	22.7	28.6	38.6	47.6	18,250	15,000
24-1	22.7	29.0	40.8	52.2	18,500	14,750
1-2	22.7	29.5	43.1	56.7	18,250	16,000
2-3	22.7	29.9	45.4	61.2	17,750	16,000
3-4	22.7	29.9	45.4	61.2	18,000	16,000
4-5	22.7	29.9	45.4	61.2	17,500	15,750
5-6	22.7	29.9	45.4	61.2	19,000	16,500
6-7	22.7	29.9	45.4	61.2	19,750	16,250
7-8	22.7	29.9	45.4	61.2	19,750	16,250

DISTRIBUTION OF LOAD CONDITIONS
(Days/yr)

	Ambient Temperature			
	Hot	Warm	Cool	Cold
Weekday	62	64	62	57
Weekend	31	31	30	28

TABLE F-2

UTILITY LOAD PROFILES
(Net to Process Plant)

RECYCLED PAPERBOARD MILL

	Steam, 10^3 kg/hr				Electricity, kW			
	Summer		Winter		Summer		Winter	
Time	Mon.-Sat.	Sunday	Mon.-Sat.	Sunday	Mon.-Sat.	Sunday	Mon.-Sat.	Sunday
6-7	49.4	55.3	64.4	59.0	4820	1913	4887	3997
7-8	51.3	35.4	64.9	19.1	4520	333	4587	1987
8-9	47.6	20.0	64.0	27.7	4640	333	4787	1467
9-10	47.6	17.7	62.1	23.4	4500	333	4927	1117
10-11	46.7	7.7	65.3	27.9	4450	333	4907	897
11-12	47.2	0.0	67.6	16.6	3540	333	4947	417
12-13	44.5	0.0	62.6	7.0	3310	333	5277	417
13-14	47.6	0.0	64.4	6.4	3350	333	5137	417
14-15	47.6	0.0	60.3	6.4	3280	333	5127	417
15-16	46.7	0.0	58.5	6.4	3870	333	5067	417
16-17	47.6	0.0	62.1	6.4	4450	333	4987	417
17-18	47.6	0.0	65.3	6.4	4800	333	5097	417
18-19	47.2	0.0	64.0	6.1	4240	333	4957	417
19-20	50.8	0.0	63.5	6.1	4400	333	4897	417
20-21	50.8	0.0	63.5	6.1	4470	333	4707	417
21-22	51.3	0.0	63.0	6.1	4560	333	4757	417
22-23	51.7	0.0	64.4	5.9	4600	333	4897	417
23-24	46.7	0.0	64.4	5.9	3770	333	4737	417
24-1	49.9	0.0	60.8	5.9	3990	333	4881	417
1-2	47.2	0.0	61.7	5.9	4640	333	4977	417
2-3	45.4	0.0	58.1	5.4	4600	333	4897	417
3-4	44.5	0.0	60.3	4.8	4370	333	5137	417
4-5	47.2	0.0	59.9	6.1	4345	333	4881	417
5-6	47.2	0.0	61.7	5.9	3700	333	5027	417

DISTRIBUTION OF LOAD CONDITIONS
(Days/yr)

	Season	
Day	Summer	Winter
Mon.-Sat.	156	157
Sunday	26	26

TABLE F-3

UTILITY LOAD PROFILES
(Net to Process Plant)

MEATPACKING PLANT

Time	Steam, 10^3 kg/hr			Electricity, kW		
	Weekday	Saturday	Idle	Weekday	Saturday	Idle
6-7	1.27	1.27	0.0	183	220	141
7-8	1.63	1.54	0.0	421	394	143
8-9	1.68	1.54	0.0	457	416	144
9-10	1.72	1.59	0.0	440	425	165
10-11	1.77	1.27	0.0	422	429	154
11-12	1.77	1.13	0.0	427	416	179
12-13	1.36	0.45	0.0	357	332	155
13-14	1.63	0.0	0.0	420	313	169
14-15	1.59	0.0	0.0	407	266	168
15-16	1.50	0.0	0.0	401	247	174
16-17	1.36	0.0	0.0	389	220	174
17-18	1.22	0.0	0.0	318	187	170
18-19	1.22	0.0	0.0	316	179	171
19-20	1.13	0.0	0.0	308	173	174
20-21	1.04	0.0	0.0	190	166	197
21-22	0.54	0.0	0.0	211	177	164
22-23	0.18	0.0	0.0	199	155	167
23-24	0.18	0.0	0.0	199	155	150
24-1	0.18	0.0	0.0	183	166	160
1-2	0.18	0.0	0.0	180	148	149
2-3	0.18	0.0	0.0	184	145	172
3-4	0.18	0.0	0.0	186	158	187
4-5	0.18	0.0	0.0	217	143	206
5-6	0.18	0.0	0.18	212	140	215

DISTRIBUTION OF LOAD CONDITIONS
(Days/yr)

Weekdays	-	250
Working Saturdays	-	45
Idle	-	70

APPENDIX G

FUEL CELL DATA FOR USE IN "ON-SITE INDUSTRIAL APPLICATIONS" STUDY

(Contract NAS 3-20818)

OPERATING CHARACTERISTICS

Fuel cell power system electrical and heat efficiencies as a function of percent load are given in Figure G-1 for two fuel cells. Power section A is a phosphoric acid system that operates at 191°C and an air pressure of 379 kPa. System B, also phosphoric acid, operates at 163°C and ambient air pressure. Both systems supply low pressure steam by heat exchange with the cell stack coolant. System A steam pressure ranges from 103-414 kPa (gage), for system B the range is 103-207 kPa (gage). Steam pressure within these ranges is determined by its end use and affects the size of the stack coolant heat exchanger (steam generator). Hot water from both systems is obtained by heat exchange with stack exhaust gases and nominally delivered at 71°C.

CAPITAL COSTS

The selling price of the fuel cell power sections and fuel processor section are given in Figures G-2 and G-3, respectively. Equipment sizes are restricted to the ranges shown in Figures G-2 and G-3. Capital costs are given in 1977 dollars.

Both the power and fuel processing sections contain all necessary equipment for startup (auxillary heat exchangers, startup heaters, etc.) and all heat exchangers internal to the process. The following are not included in the costs and must be supplied by the contractor:

- Fuel storage and delivery
- Air compressor for pressurized system
- Air blower for ambient system
- Steam and hot water heat exchangers
- Power conditioner
- Cooling tower (if necessary)
- Water storage and treatment
- Controls
- Recycle of anode exhaust to fuel processor
- Control air supply
- Inert gas supply
- Coolant pump

The economic life of the powerplant is assumed to be 20 years.

OPERATING AND MAINTENANCE COSTS

Operating and maintenance costs are .065¢/kWh plus one half the total plant cost after each 30,000 hours of operation. (Total plant cost,

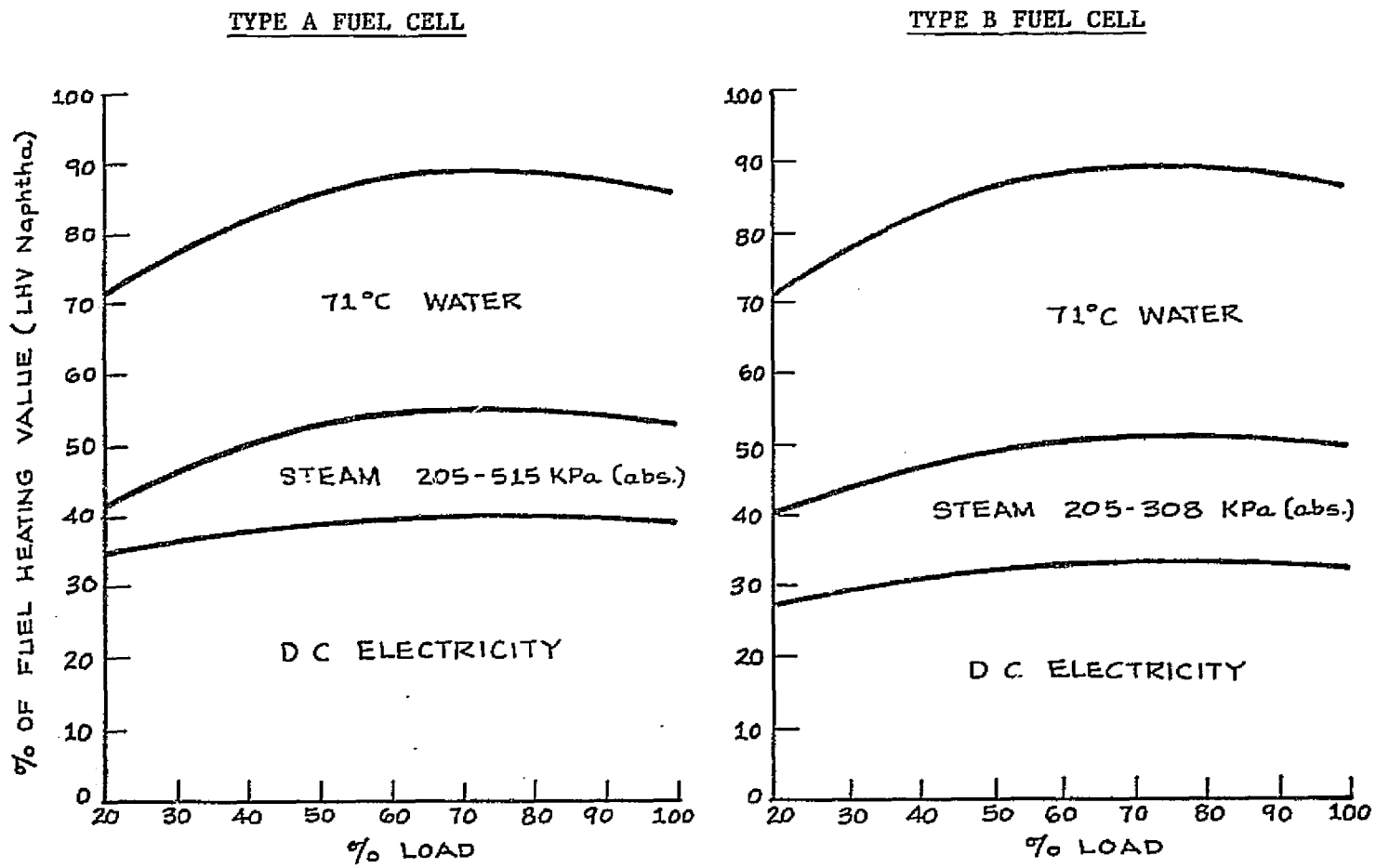

FIGURE G-1

EFFICIENCY OF FUEL CELL POWER SYSTEM

Fuel Processor and Power Section only;
Power Conditioning not Included

Source: NASA-LeRC

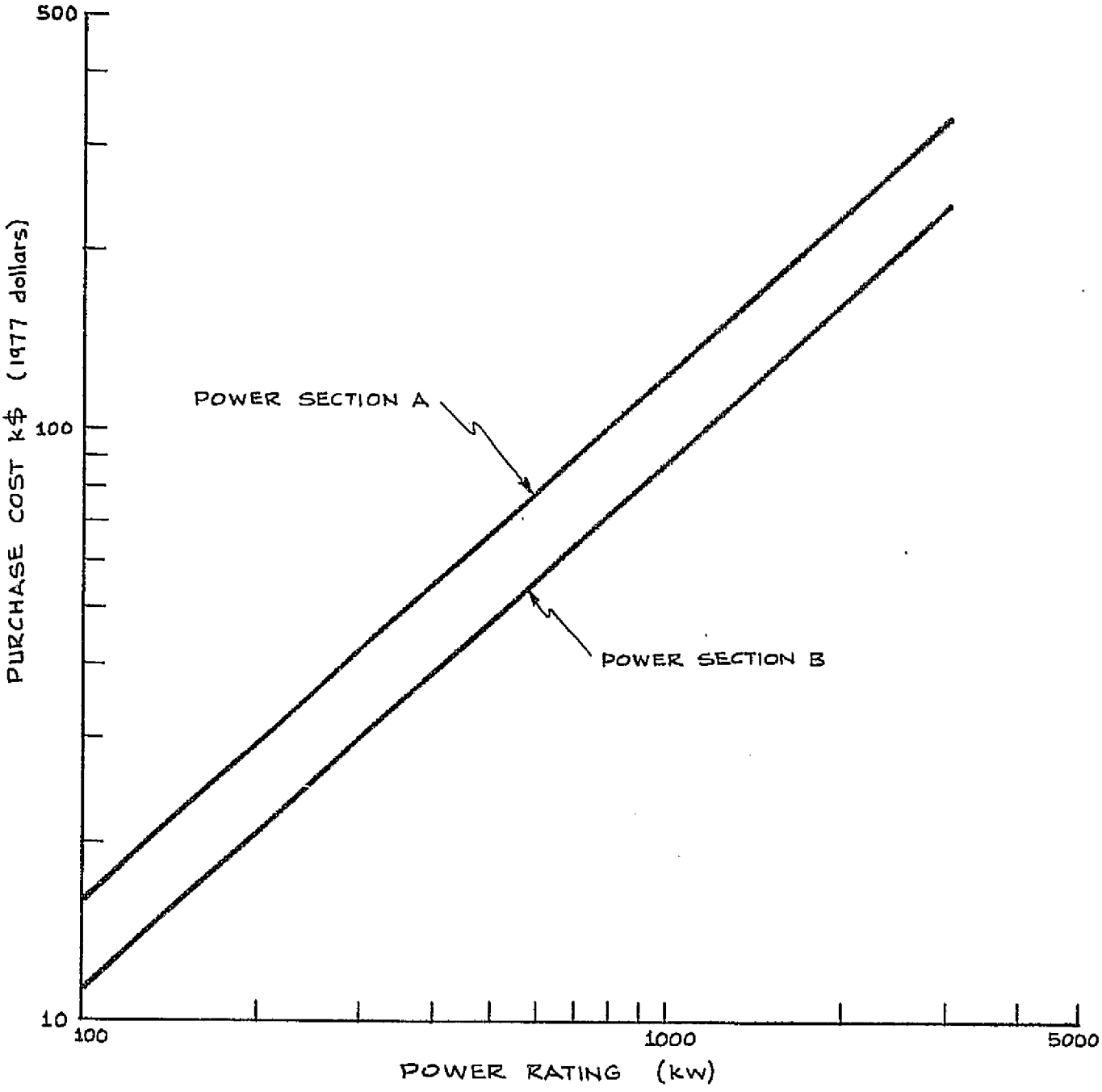

FIGURE G-2

FUEL CELL POWER SECTION COSTS

Source: NASA-LeRC

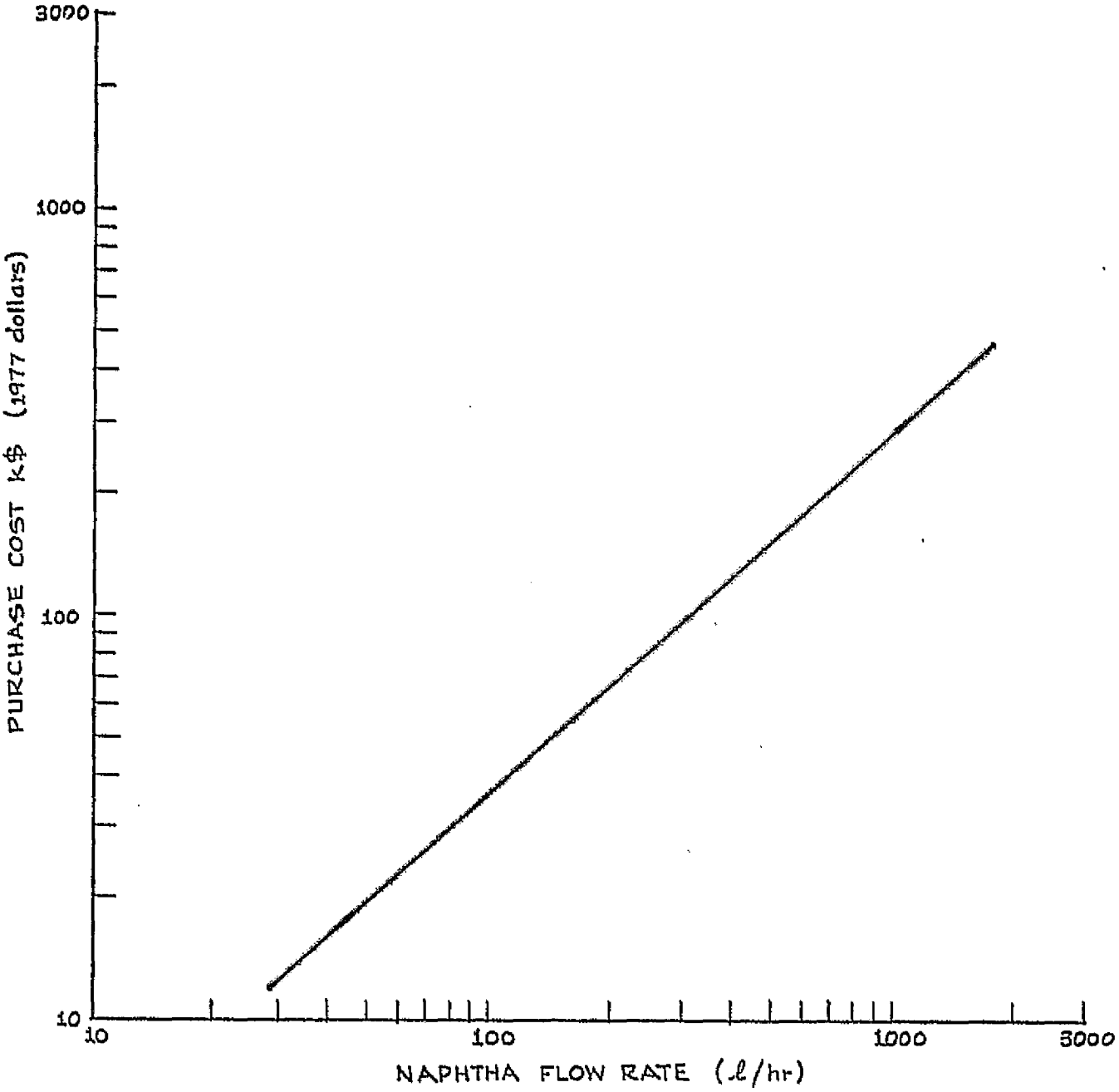

FIGURE G-3

FUEL PROCESSING SECTION COSTS

Source: NASA-LeRC

as used here, includes fuel processor, power section, heat exchangers, power conditioning, controls, pumps and compressors but not fuel and water storage or cooling towers.) These operating and maintenance costs include catalyst and fuel cell stack replacement. Operating and maintenance costs are in 1977 dollars.

AVAILABILITY

Power section and fuel processor modules will be available 95% of the time on a yearly basis. The module size is to be determined by the contractor such that reliability requirements are satisfied with a module size in the range given on the cost graphs.

PHYSICAL SIZE

Each system is 0.23 m^2/kW, 5 m high with a weight of 18-23 kg/kW. These size and weight figures include all fuel processor and power section equipment except fuel and water storage and cooling tower.

SCHEMATIC DRAWINGS

A simplified schematic of the power section and fuel processor is supplied as Figure G-4. The equipment shown within the dashed lines in this figure is included in the cost data presented in Figures G-2 and G-3. All equipment shown outside the dashed lines is the responsibility of the contractor.

Molar flow rates for the tagged lines are presented in Table G-1. The molar flow rates in Table G-1 are approximate and were used only to design and size peripheral equipment and were not used to compute fuel cell performance.

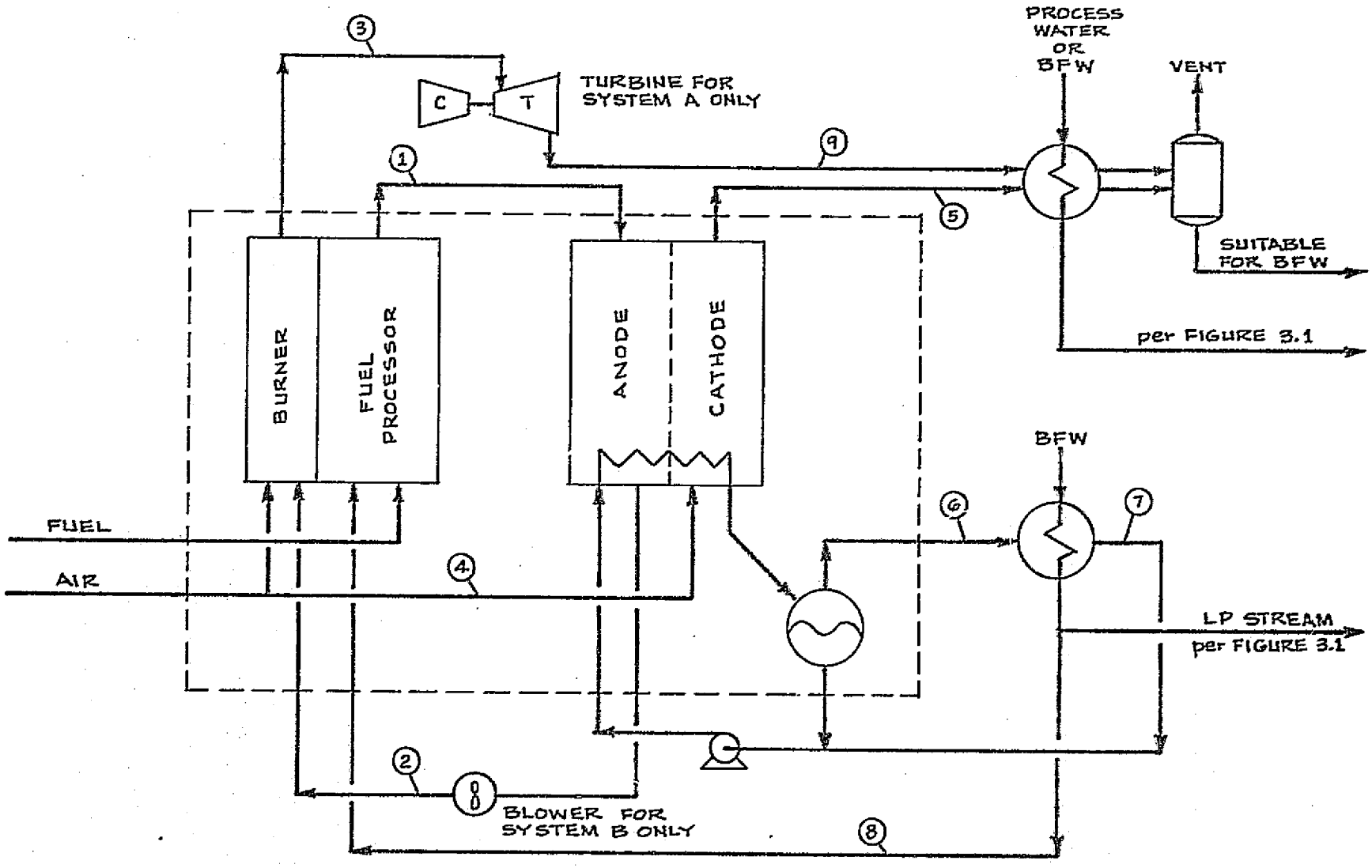

FIGURE G-4

FUEL PROCESSOR/POWER SECTION SCHEMATIC

Source: NASA-LeRC

Note: Exhaust gas stream may be combined before heat exchange or may have separate heat exchangers.

TABLE G-1

PRESSURIZED SYSTEM

Stream	Temperature °C	Pressure KPa	H_2	O_2	N_2	CO_2	H_2O
			g mole/hr /kw				
Anode Feed	190	379	36.4	--	--	12.0	18.0
Anode Exhaust	190	379	6.6	--	--	12.0	18.0
Burner Exhaust	371	379	--	3.3	26.4	12.0	24.6
Cathode Feed	--	379	--	21.3	85.2	--	25.0
Cathode Exhaust	190	379	--	6.4	85.2	--	54.8
Hot Coolant	190	sat	--	--	--	--	104
Cooled Coolant	163	--	--	--	--	--	104
Reformer Steam	163	sat	--	--	--	--	67
Turbine Exhaust	CONDITIONS DETERMINED BY ADL						
		AMBIENT SYSTEM					
Fuel	163	amb	46.6	--	--	15.4	23.0
Anode Exhaust	163	amb	9.4	--	--	15.4	23.0
Burner Exhaust	371	amb	--	4.7	37.6	15.4	32.4
Air	--	amb	--	26.6	106.5	--	31.2
Cathode Exhaust	163	amb	--	8.0	106.5	--	68.4
Hot Coolant	163	sat	--	--	--	--	135
Cooled Coolant	135	--	--	--	--	--	135
Reformer Steam	138	sat	--	--	--	--	85

APPENDIX H

SPARE CAPACITY VS. STANDBY POWER
COST TRADE-OFF ANALYSIS

PRECEDING PAGE BLANK NOT FILMED

The first step in the trade-off analysis was a determination of the probable outage (hours per year not available) of the required operating modules for different numbers of space modules. Table H-1 summarizes system availability for different configurations and the probable outage of operating units by individual unit for the copper refinery design based on 2200 kW modules. For example, the probability of the first unit being off when no spares are installed is $P_1 - P_9 = 0.9139 - 0.5487 = 0.3152$.

The maximum electricity demand and probable annual usage is also presented in Table H-1. The maximum demand was established by considering the probability of a unit being off more than 0.25 hours per year, assuming that anything over a 15-minute outage would be an increment on demand. As seen in Table H-1, the first reduction in potential demand for the copper refinery occurs between two and three spare units because the probable outage of the third unit is >0.25 hr with <3 spares. The probable usage is the product of the annual outage and the module capacity (2200 kW) (i.e., for 3 spares; 26 hr x 2200 = 57,200 kWh).

Table H-2 presents the investment cost for spare capacity and the present value of the probable annual savings due to installation of a given number of spares. The capital cost of fuel cell modules is based on the NASA cost curves and includes a $100/kW allowance for peripherals and installation.

The annual demand and energy usage changes are computed from the standby power price schedule (see report section 4.2.3) and the demand and usage projections in Table H-1 as follows:

a) Demand Charge with One Spare

1st 50 kW; $234 x 12 mo.	$ 2,808
Next 150 kW: 150 x $3.17 x 12 mo.	5,706
Over 200 kW: (6600-200) x $2.40 x 12 mo.	184,320
TOTAL DEMAND CHARGE	$ 192,834

b) Usage Charge with One Spare

$$\text{Maximum Monthly Usage} = \frac{7,304,000}{12} = 608,667 \text{ kWh/mo}$$

First: 200 x [Demand] = 200 [6600] = 1,320,000 kWh/mo

Therefore, all usage is at 2.99¢/kWh.

Therefore, annual usage charge with one spare is:

1,861,000 kWh x 0.0299 = $55,644.

The sum of the demand and usage charges and its twenty year present worth are presented in Table H-2. The present worth of the annual power cost savings is the power cost difference for zero and η spares. The results

TABLE H-1

COPPER INDUSTRY
AVAILABILITY OF FUEL CELL MODULES

Installed Units	Spare Units	Probable Availability[a] of Indicated Units				Probable Outage of Operating Units		
		10	9	8	7	1st Unit	2nd Unit	3rd Unit
10	0	0.5987	0.9139	0.9885	0.9990	0.3152	0.0746	0.0105
11	1	0.8981	0.9848	0.9985	0.9999	0.0867	0.0137	0.0014
12	2	0.9804	0.9978	0.9998	∿1	0.0174	0.0020	0.0002
13	3	0.9969	0.9997	∿1	∿1	0.0028	0.0003	0
14	4	0.996	0.9997	∿1	∿1	0.0004	0	0

OUTAGE RATE OF FUEL CELL MODULES

Spare Units	% Peak Time 'OFF'			'OFF' Hours per Year by Unit[b]			Potential Demand, kW	Probable Usage, kWh
	1st Unit	2nd Unit	3rd Unit	1st Unit	2nd Unit	3rd Unit		
0	31.52	7.46	1.05	2615	618	87	6600	7,304,000
1	8.67	1.37	0.14	720	114	12	6600	1,861,000
2	1.74	0.20	0.02	144	17	2	6600	359,000
3	0.28	0.03	--	23	3	--	4400	57,200
4	0.04	--	--	3	--	--	2200	6,600

[a] based on 95% availability of individual modules.

[b] based on 8,300 full plant capacity operating hours per year times percent outage.

TABLE H-2

COPPER INDUSTRY

PRESENT VALUE OF STAND-BY POWER CHARGE

Spare Units	Annual Demand Charge, $K	Annual Energy Charge, $K	Total Annual Charge, $K	Present Worth of Annual Power Cost, $K 20 yrs @ 13.2%
0	192.8	218.4	411.2	2854
1	192.8	55.6	248.4	1724
2	192.8	10.7	203.6	1413
3	129.5	1.7	131.2	911
4	66.1	0.2	66.3	460

CAPITAL INVESTMENT FOR EXTRA MODULES (TYPE A)

Spare Units	Cost of Spares, $K	Allowance for Installation*	Installed Cost, $K	Present Worth of Annual Power Savings, $K 20 yrs @ 13.2%
1	445	220	750	1130
2	890	440	1500	1441
3	1335	660	2250	1943
4	1780	880	3000	2394

*based on $100/kw

show that when more than one spare is installed the hardware cost exceeds the present value of the power cost savings. A graphical comparison of investment costs and present value of annual savings for extra modules is shown in Figure H-1 for copper refining.

The results of similar analyses for the other industrial utility systems are summarized in Table H-3 for both fuel cell types. In general, only one spare fuel cell module is economically justified when standby power is provided by the electric utility.

FIGURE H-1

REFINED COPPER

STANDBY POWER SAVINGS VERSUS
COST OF SPARE FUEL CELL CAPACITY

Discount Rate 13.2%
Project Life 20 Years

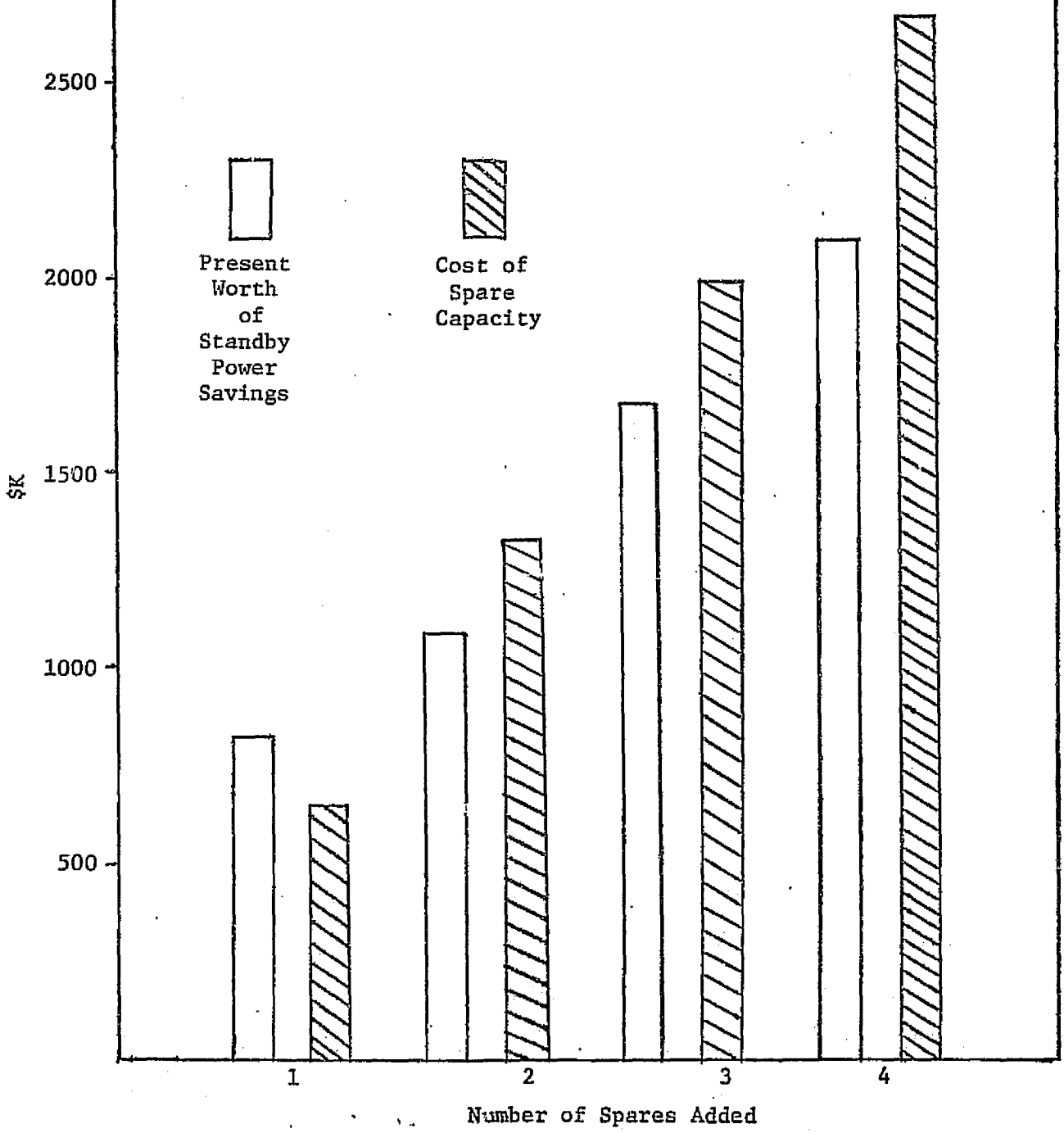

TABLE H-3

CASES D AND E

SUMMARY OF STANDBY POWER TRADE-OFF ANALYSIS
$(000)

	Copper Refining			Recycle Paperboard			Meatpacking		
	Present Worth of Savings	Spare Module Fuel Cell Cost		Present Worth of Savings	Spare Module Fuel Cell Cost		Present Worth of Savings	Spare Module Fuel Cell Cost	
Fuel Cell Type:		A	B		A	B		A	B
No. Spares									
0	0	0	0	0	0	0	0	0	0
1	1130	750*	660*	304	300*	267*	68	53*	47*
2	1441	1500	1320*	532	600	534*	71	106	94
3	1943	2250	1980	707	900	801	111	159	141

*Fuel cell first cost equal or less than present worth of annual purchased power (standby) cost savings.

Arthur D Little Inc