National Aeronautics and
Space Administration

Lyndon B. Johnson Space Center
Houston, Texas 77058

(NASA-CR-151414) RESULTS OF A TEST OF A DEVELOPMENT FLIGHT INSTRUMENTATION GAS TEMPERATURE PROBES IN THE AMES RESEARCH CENTER 3.5 FOOT HYPERSONIC WIND TUNNEL (IH100) (Chrysler Corp.) 96 p

N78-79474

Unclas
00/16 33822

SPACE SHUTTLE AEROTHERMODYNAMIC DATA REPORT

RECEIVED
NASA STI FACILITY
NOV 1978

REPRODUCED BY
NATIONAL TECHNICAL
INFORMATION SERVICE
U.S. DEPARTMENT OF COMMERCE
SPRINGFIELD, VA 22161

Data Management Services

SPACE DIVISION CHRYSLER CORPORATION

U.S. DEPARTMENT OF COMMERCE
National Technical Information Service

N78-79474

RESULTS OF TESTS OF A DEVELOPMENT FLIGHT INSTRUMENTATION GAS TEMPERATURE PROBE IN THE AMES RESEARCH CENTER 3.5 FT. HYPERSONIC WIND TUNNEL

B. J. Herrera

Rockwell International Space Division

1.

96

ATTENTION

PORTIONS OF THIS REPORT ARE NOT LEGIBLE. HOWEVER, IT IS THE BEST REPRODUCTION AVAILABLE FROM THE COPY SENT TO NTIS.

WIND TUNNEL TEST SPECIFICS:

Test Number:	ARC 3.5 HWT 227
NASA Series Number:	IH100
Test Dates:	June 20 through 23, 1977
Occupancy Hours:	32

FACILITY COORDINATOR:

J. G. Marvin
Mail Stop 229-1
Ames Research Center
Moffett Field, CA 94035

Phone: (415) 965-5390

ANALYSIS ENGINEER:

M. G. Fagan
Mail Code AC07
Rockwell International
Space Division
12214 Lakewood Blvd.
Downey, CA 90241

Phone: (213) 922-3521

PROJECT ENGINEERS:

B. J. Herrera
Mail Code AD38
Rockwell International
Space Division
12214 Lakewood Blvd.
Downey, CA 90241

Phone: (213) 922-4939

W. K. Lockman
Mail Stop 229-1
Ames Research Center
Moffett Field, CA 94035

Phone: (415) 965-6255

DATA MANAGEMENT SERVICES:

Prepared by: Liaison--D. W. Hersey
Operations--G. R. Lutz

Reviewed by: G. G. McDonald

Approved: J. L. Glynn, Manager
Data Operations

Concurrence: N. D. Kemp, Manager
Data Management Services

Chrysler Corporation Michoud Defense-Space Division assumes no responsibility for the data presented other than display characteristics.

PRECEDING PAGE BLANK NOT FILMED

August 1978

DMS-DR-2418
NASA CR-151,414

RESULTS OF TESTS OF A DEVELOPMENT FLIGHT INSTRUMENTATION GAS TEMPERATURE PROBE IN THE AMES RESEARCH CENTER 3.5 FT. HYPERSONIC WIND TUNNEL (IH100)

by

B. J. Herrera
Shuttle Aero Sciences
Rockwell International Space Division

Prepared under NASA Contract Number NAS9-13247

for

Data Management Services
Chrysler Corporation Michoud Defense-Space Division
New Orleans, La. 70189

for

Engineering Analysis Division

Johnson Space Center
National Aeronautics and Space Administration
Houston, Texas

3a

RESULTS OF TESTS OF A DEVELOPMENT FLIGHT INSTRUMENTATION GAS TEMPERATURE PROBE IN THE AMES RESEARCH CENTER 3.5 FT. HYPERSONIC WIND TUNNEL (IH100)

by

B. J. Herrera, Rockwell International Space Division

ABSTRACT

The temperature response characteristics of a Development Flight Instrumentation (DFI) gas temperature probe were obtained in the Ames Research Center 3.5 ft. Hypersonic Wind Tunnel. Tests were conducted at Mach 7.3, total pressures of 200 psi and 100 psi, total temperatures of 1500°R and 3000°R, and various probe attitudes.

Mr. W. K. Lockman, Ames Research Center, is acknowledged for his technical assistance applicable to data and applicable to the preparation of this report.

(THIS PAGE INTENTIONALLY LEFT BLANK.)

TABLE OF CONTENTS

	Page
ABSTRACT	iii
INDEX OF MODEL FIGURES	2
INTRODUCTION	3
NOMENCLATURE	4
CONFIGURATIONS INVESTIGATED	5
INSTRUMENTATION	6
TEST FACILITY DESCRIPTION	7
TEST PROCEDURE	8
DATA REDUCTION	9
TABLES	
I. RUN SCHEDULE AND TEST CONDITIONS	10
FIGURES	
MODEL	11
APPENDIX	
TABULATED SOURCE DATA	

INDEX OF MODEL FIGURES

Figure	Title	Page
1.	Development flight instrumentation (DFI) gas temperature probe.	11
2.	DFI gas temperature probe/aluminum carrier assembly.	12
3.	Test article installation photograph.	13

INTRODUCTION

The purpose of test IH100 was to obtain the temperature response characteristics of an existing Development Flight Instrumentation (DFI) gas temperature probe. This test was performed in the Ames Research Center 3.5 ft. Hypersonic Wind Tunnel at Mach 7.3.

NOMENCLATURE

SYMBOL	DESCRIPTION
Frame Time No. (Sec)	Facility timing (Sec)
Strut in Pos.	Position of strut insertion system (90.0 in. = Tunnel ℄)
TTR(R)	Tunnel temperature reference in degrees Rankine
TC1	Probe center thermocouple
TC2	Probe sleeve thermocouple
PT(PSIA)	Total pressure (psia)
PT CELL 2 (PSIA)	Total pressure backup (psia)
TT(DEG R)	Tunnel temperature degrees Rankine
PROB 1	Probe/total temperature ratio $\left(\frac{\text{PROB 1}}{\text{TTR}}\right)$
PROB 2	Probe/total temperature ratio $\left(\frac{\text{PROB 2}}{\text{TTR}}\right)$

CONFIGURATIONS INVESTIGATED

The model used in test IH100 was a wedge designed to hold the gas temperature probe. This wedge was constructed of aluminum with integral water cooling passages. The probe was mounted on an aluminum carrier to which a .75-in. HRS1 tile was bonded. The sides of the tile were protected with Thermosil. The probe protruded through the tile.

INSTRUMENTATION

The probe was instrumented with two Tungsten - 5% Rhenium/Tungsten - 26% Rhenium thermocouples. One thermocouple was located inside the central shield, the other was located between the third and the central shields.

The thermocouples were referenced to a measured temperature in the tunnel injection mechanism strut. This temperature was measured with a Chromel/Alumel thermocouple referenced to 150°F.

The data were amplified, digitized and recorded on the 3.5 ft. Hypersonic Wind Tunnel Beckman data acquisition system.

TEST FACILITY DESCRIPTION

The NASA-Ames 3.5-Foot Hypersonic Wind Tunnel is a closed-circuit blowdown-type tunnel capable of operating at nominal Mach numbers of 5, 7, and 10 at pressures to 1800 psia and temperatures to 3400°R for run times to four minutes. The major components of the facility include a gas storage system where the test gas is stored at 3000 psi, a storage heater filled with aluminum-oxide pebbles capable of heating the test gas to 3400°R, axisymmetric contoured nozzles with exit diameters of 42 inches for generating the desired Mach number, and a 900,000 ft^3 vacuum storage system which operates to pressures of 0.3 psia. The test section itself is an open-jet type enclosed within a chamber approximately 12 feet in diameter and 40 feet in length, arranged transversely to the flow direction.

A model support system is provided which can pitch models through an angle-of-attack range of -20 to +18 degrees, in a vertical plane, about a fixed point of rotation on the tunnel centerline. This rotation point is adjustable from 1 to 5 feet from the nozzle exit plane. The model normally is out of the test stream (strut centerline 37 inches from tunnel centerline) until the tunnel test conditions are established after which it is inserted. Insertion time is adjustable to as little as 1/2 second and models may be inserted at any strut angle.

A high-speed, analog-to-digital data acquisition system is used to record test data on magnetic tape. The present system is equipped to measure and record the outputs from 80 transducers in addition to 20 channels of tunnel parameters.

TEST PROCEDURE

The model was mounted inverted on the ARC 3.5 Hypersonic Wind Tunnel sector.

The model leading edge was water cooled using the existing water-cooling lines on the model. Installation of water lines to the model was performed by ARC personnel.

The model was injected into the tunnel after flow was established. The model remained in the tunnel flow core for a minimum of 60 seconds.

After each run, the model was allowed to cool to near ambient before inspection and/or changes were made.

Shadowgraphs were taken during most runs, and are on file at the Wind Tunnel Operations Group at Rockwell International Space Division.

DATA REDUCTION

The tunnel conditions were calculated using standard ARC programs. The thermocouple outputs were converted to engineering units using standard thermocouple tables. For each data point, the following ratio was calculated:

$$\frac{Tmeas}{Ttotal}$$

Data are presented as listings of the time - temperature and time - temperature ratio histories for both thermocouples.

TABLE I. RUN SCHEDULE AND TEST CONDITIONS

RUN	α WEDGE	ψ PROBE	P_t	T_t	M_∞
1	0	0	200	1500	7.35
2	0	0	1000	1500	↓
3	0	0	200	2000	↓
4	0	0	1000	↓	↓
5	0	45	1000	↓	↓
6	0	45	200	↓	↓
7	0	45	200	↓	↓
8	30	0	200	↓	↓
9	30	0	1000	↓	↓

α wedge was defined as shown in Figure 2.

ψ probe was defined as the angle between the wedge longitudinal centerline and the row of large holes on the probe outer shield, positive clockwise.

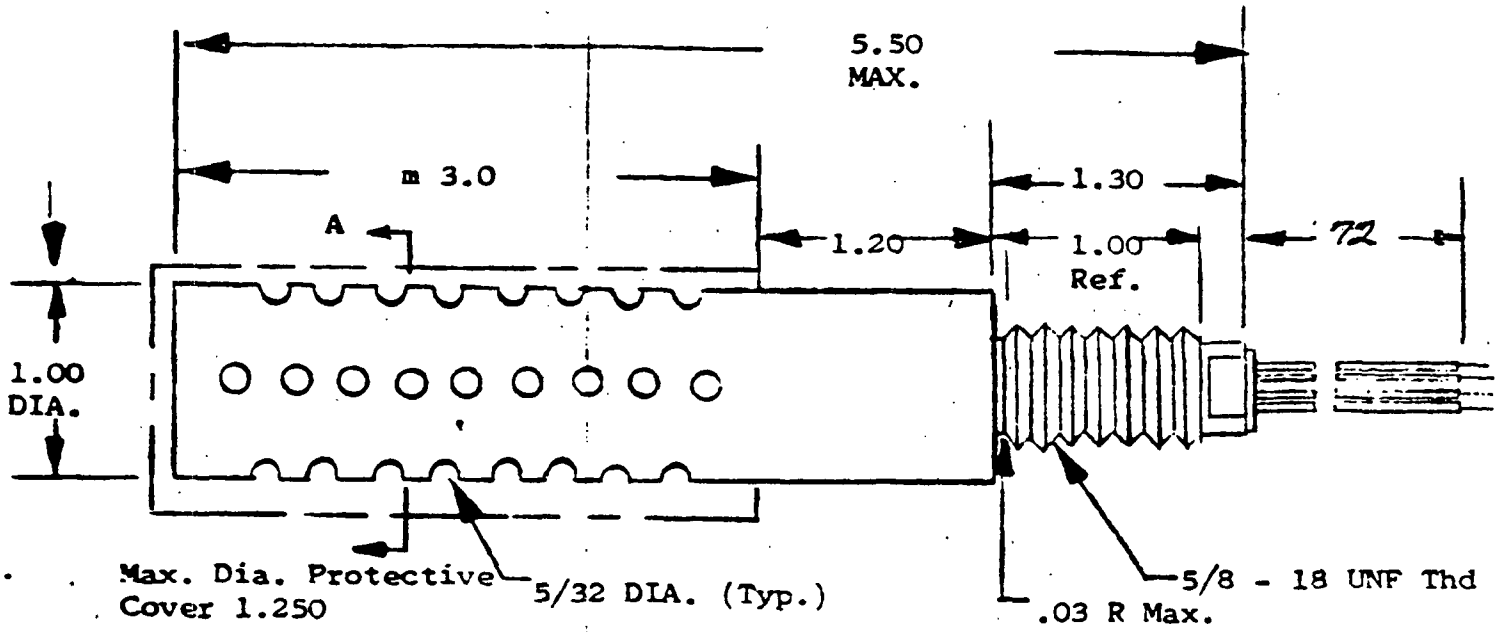

Section A-A

Figure 1. Development flight instrumentation (DFI) gas temperature probe.

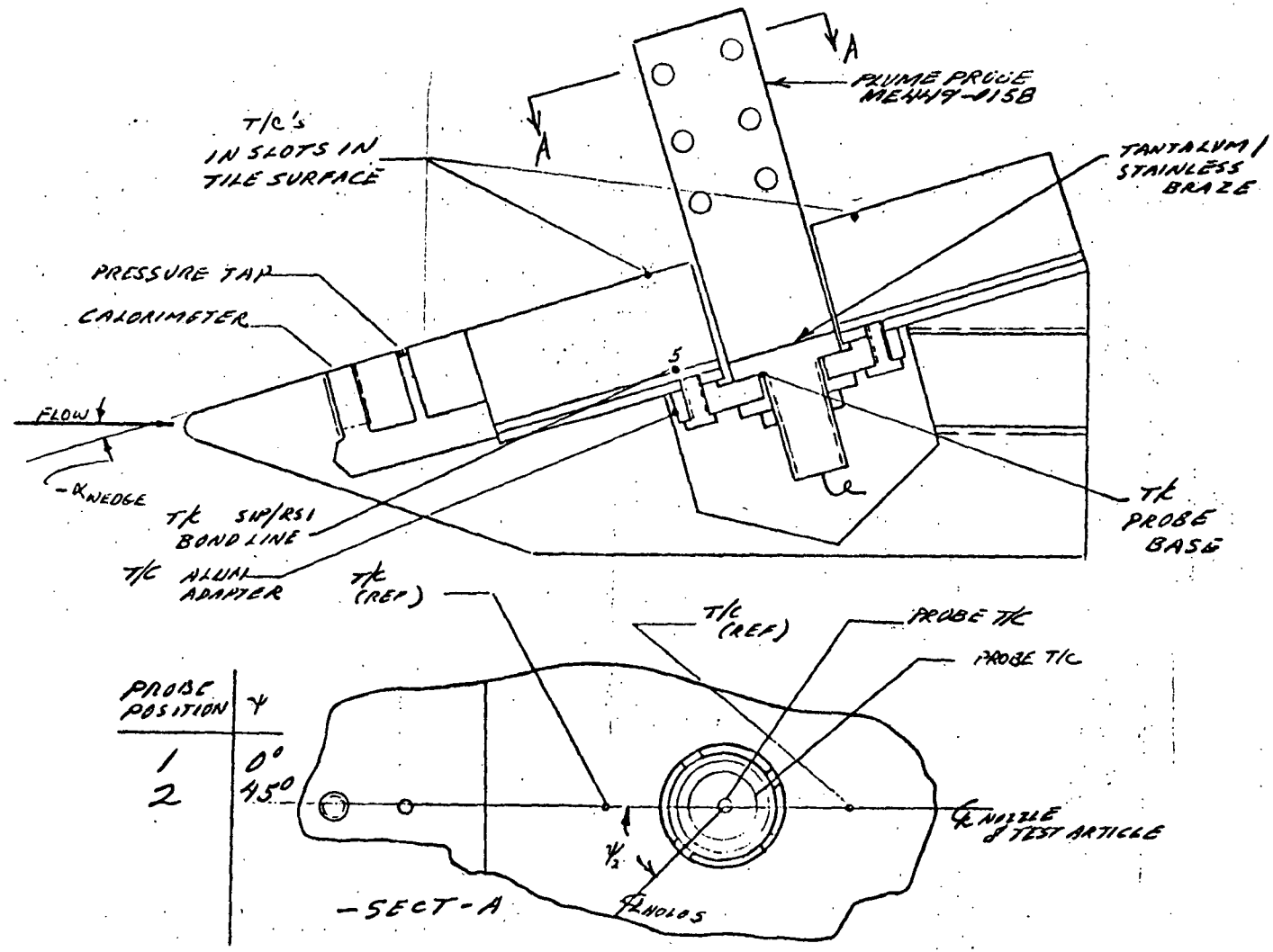

Figure 2. DFI gas temperature probe/aluminum carrier assembly.

ORIGINAL PAGE
BLACK AND WHITE PHOTOGRAPH

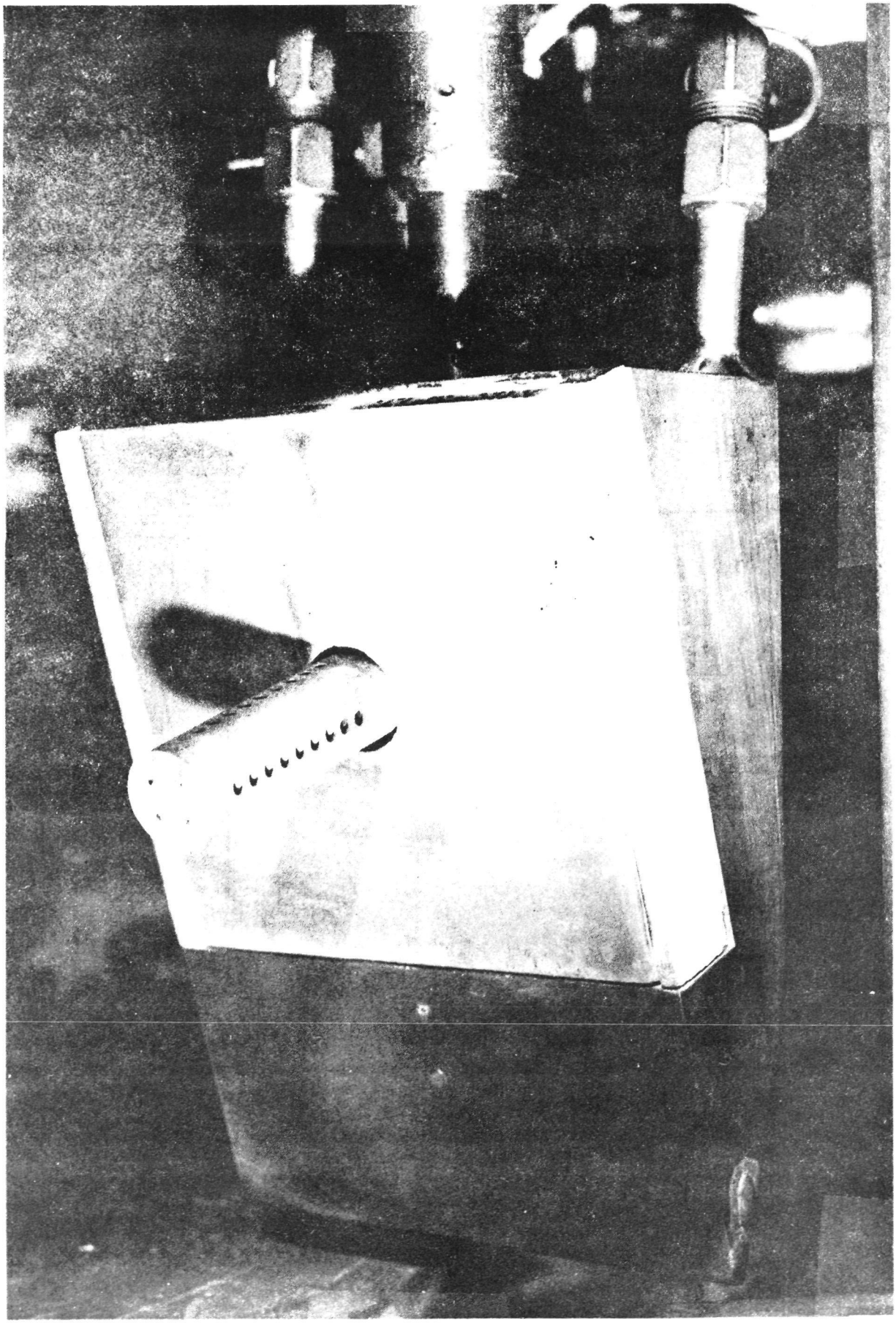

Figure 3. Test article installation photograph.

APPENDIX

TABULATED SOURCE DATA

NATIONAL AERONAUTICS AND SPACE ADMINISTRATION AMES RESEARCH CENTER MOFFETT FIELD CALIF. *** PRELIMINARY DATA ***
3.5 FT HYPERSONIC WIND TUNNEL
CONSTANT SET 100 * GAS-TEMP-PROBE MACH NO.=7.35 WEDGE ANG=0 PROBE ANG=0

TEST 227
RUN 1/1

FRAME NO.	TIME (SEC)	STRUT IN POS	TTP (R)	TEMPERATURE IN DEGREES RANKINE TC1	TC2
3	.014	4.94	540.	542.	543.
4	.515	4.95	540.	542.	543.
5	1.015	4.95	540.	542.	543.
6	1.515	4.95	540.	542.	543.
7	2.015	4.95	540.	542.	543.
8	2.515	4.94	540.	542.	543.
9	3.015	4.93	540.	542.	543.
10	3.515	4.94	540.	542.	543.
11	4.015	4.94	540.	542.	543.
12	4.515	4.94	540.	542.	543.
13	5.015	47.47	540.	542.	543.
14	5.515	47.48	540.	542.	543.
15	6.015	60.46	540.	544.	634.
16	6.515	90.18	540.	550.	767.
17	7.015	90.20	540.	557.	876.
18	7.515	90.22	540.	566.	968.
19	8.015	90.25	540.	576.	1042.
20	8.515	90.29	540.	588.	1106.
21	9.015	90.30	540.	602.	1158.
22	9.515	90.31	540.	617.	1202.
23	10.015	90.34	540.	633.	1239.
24	10.515	90.34	540.	649.	1273.
25	11.015	90.35	540.	665.	1304.
26	11.515	90.36	540.	682.	1331.
27	12.015	90.34	540.	700.	1353.
28	12.515	90.35	540.	716.	1372.
29	13.015	90.34	540.	733.	1390.
30	13.515	90.35	540.	751.	1405.
31	14.015	90.33	540.	768.	1417.
32	14.515	90.33	540.	785.	1427.
33	15.015	90.32	540.	803.	1438.
34	15.515	90.31	540.	819.	1446.
35	16.015	90.32	540.	836.	1456.
36	16.515	90.31	540.	853.	1464.
37	17.015	90.31	540.	869.	1471.
38	17.515	90.32	540.	886.	1478.
39	18.015	90.31	540.	901.	1483.
40	18.515	90.32	540.	917.	1486.
41	19.015	90.33	540.	932.	1491.
42	19.515	90.36	540.	947.	1497.

ORIGINAL PAGE IS
OF POOR QUALITY

NATIONAL AERONAUTICS AND SPACE ADMINISTRATION AMES RESEARCH CENTER MOFFETT FIELD CALIF. *** PRELIMINARY DATA ***
3.5 FT HYPERSONIC WIND TUNNEL
CONSTANT SET 100 * GAS-TEMP-PROBE MACH NO.=7.35 WEDGE ANG=0 PROBE ANG=0

TEST-227
RUN 1/2

FRAME NO.	PT (PSIA)	PT CELL 2 (PSIA)	PCH /P	TT (DEGR)	PROBE / TOTAL TEMPERATURE RATIO PR081	PR082
3	205.9	206.1		1531.	.3542	.3549
4	205.8	206.0		1532.	.3536	.3542
5	205.8	205.8		1533.	.3534	.3541
6	205.8	205.6		1535.	.3532	.3537
7	205.7	205.6		1536.	.3529	.3534
8	205.7	205.6		1536.	.3529	.3535
9	205.6	205.6		1537.	.3526	.3530
10	205.5	205.6		1539.	.3522	.3528
11	205.6	205.6		1540.	.3520	.3525
12	205.7	205.6		1541.	.3517	.3523
13	205.6	205.6		1544.	.3511	.3517
14	205.7	205.8		1547.	.3507	.3511
15	205.6	205.6		1550.	.3513	.4088
16	205.5	205.6		1551.	.3544	.4942
17	205.5	205.6		1553.	.3584	.5639
18	205.5	205.6		1554.	.3641	.6230
19	205.5	205.6		1554.	.3709	.6706
20	205.7	205.6		1556.	.3780	.7105
21	205.6	205.6		1557.	.3867	.7437
22	205.8	205.6		1557.	.3962	.7715
23	205.7	205.8		1558.	.4060	.7953
24	205.8	205.6		1559.	.4160	.8163
25	205.8	205.6		1561.	.4264	.8355
26	205.8	205.8		1562.	.4367	.8518
27	205.8	205.6		1563.	.4475	.8654
28	205.8	205.8		1563.	.4584	.8777
29	205.8	206.1		1563.	.4693	.8896
30	205.8	205.8		1564.	.4800	.8985
31	205.8	206.0		1564.	.4913	.9060
32	205.8	205.6		1565.	.5019	.9121
33	205.8	205.8		1565.	.5128	.9185
34	205.8	205.6		1565.	.5235	.9240
35	205.8	205.6		1566.	.5339	.9298
36	205.8	205.8		1566.	.5448	.9352
37	205.8	205.6		1566.	.5551	.9397
38	205.8	205.6		1566.	.5655	.9435
39	205.8	205.8		1566.	.5753	.9465
40	205.7	205.8		1567.	.5851	.9486
41	205.8	205.8		1568.	.5944	.9514
42	205.8	205.8		1568.	.6038	.9547

ORIGINAL PAGE IS OF POOR QUALITY

NATIONAL AERONAUTICS AND SPACE ADMINISTRATION AMES RESEARCH CENTER MOFFETT FIELD CALIF. *** PRELIMINARY DATA ***
3.5 FT HYPERSONIC WIND TUNNEL
CONSTANT SET 100 * GAS-TEMP-PROBE MACH NO.=7.35 WEDGE ANG=0 PROBE ANG=0

TEST 227
RUN 2/4

FRAME NO.	TIME (SEC)	STRUT IN POS	TTR (R)	TEMPERATURE IN DEGREES RANKINE TC1	TC2
43	20.015	90.36	540.	962.	1503.
44	20.515	90.39	540.	976.	1507.
45	21.015	90.40	540.	991.	1510.
46	21.515	90.43	540.	1005.	1514.
47	22.015	90.45	540.	1019.	1516.
48	22.515	90.46	540.	1032.	1520.
49	23.015	90.51	540.	1046.	1523.
50	23.515	90.53	540.	1058.	1527.
51	24.015	90.54	540.	1070.	1530.
52	24.515	90.53	540.	1082.	1532.
53	25.015	90.54	540.	1094.	1534.
54	25.515	90.54	540.	1106.	1536.
55	26.015	90.52	540.	1117.	1538.
56	26.515	90.51	540.	1128.	1538.
57	27.015	90.48	540.	1138.	1540.
58	27.515	90.46	540.	1149.	1540.
59	28.015	90.43	541.	1159.	1541.
60	28.515	90.41	541.	1168.	1542.
61	29.015	90.38	541.	1178.	1543.
62	29.515	90.34	541.	1186.	1544.
63	30.015	90.32	540.	1195.	1546.
64	30.515	90.27	540.	1204.	1548.
65	31.015	90.25	540.	1212.	1551.
66	31.515	90.24	540.	1219.	1553.
67	32.015	90.20	540.	1227.	1553.
68	32.515	90.20	540.	1234.	1553.
69	33.015	90.20	540.	1240.	1553.
70	33.515	90.20	540.	1247.	1555.
71	34.015	90.20	540.	1254.	1555.
72	34.515	90.21	540.	1259.	1556.
73	35.015	90.22	540.	1266.	1559.
74	35.515	90.24	540.	1272.	1562.
75	36.015	90.25	540.	1277.	1564.
76	36.515	90.28	540.	1283.	1564.
77	37.015	90.31	540.	1288.	1564.
78	37.515	90.32	540.	1293.	1564.
79	38.015	90.36	540.	1298.	1564.
80	38.515	90.35	540.	1303.	1564.
81	39.015	90.37	540.	1307.	1566.
82	39.515	90.36	540.	1311.	1566.

ORIGINAL PAGE IS OF POOR QUALITY

NATIONAL AERONAUTICS AND SPACE ADMINISTRATION AMES RESEARCH CENTER MOFFETT FIELD CALIF. *** PRELIMINARY DATA ***
3.5 FT HYPERSONIC WIND TUNNEL
CONSTANT SET 100 * GAS-TEMP-PROBE MACH NO.=7.35 WEDGE ANG=0 PROBE ANG=0

TEST 227
RUN 1/5

FRAME NO.	PT (PSIA)	PT CELL 2 (PSIA)	PCH /P	TT (DEGR)	PROBE / TOTAL TEMPERATURE RATIO PROB1	PROB2
43	205.8	205.8		1569.	.6132	.9577
44	205.8	206.1		1570.	.6219	.9601
45	205.7	205.8		1569.	.6312	.9622
46	205.8	205.8		1569.	.6402	.9647
47	205.8	206.0		1570.	.6491	.9657
48	205.8	205.6		1569.	.6575	.9683
49	205.7	205.6		1570.	.6661	.9703
50	205.7	205.6		1570.	.6742	.9726
51	205.7	205.8		1571.	.6814	.9739
52	205.7	205.8		1572.	.6888	.9750
53	205.8	205.6		1572.	.6960	.9759
54	205.7	205.6		1573.	.7032	.9766
55	205.8	206.1		1573.	.7100	.9775
56	205.7	205.6		1573.	.7172	.9776
57	205.8	205.6		1574.	.7231	.9780
58	205.8	205.8		1574.	.7296	.9784
59	205.8	206.0		1573.	.7369	.9795
60	205.8	205.9		1574.	.7423	.9796
61	205.8	206.1		1574.	.7462	.9801
62	205.8	206.0		1574.	.7536	.9811
63	205.8	206.1		1575.	.7588	.9817
64	205.8	206.2		1575.	.7644	.9831
65	205.8	205.8		1575.	.7693	.9846
66	205.8	205.8		1575.	.7743	.9860
67	205.8	205.9		1575.	.7790	.9864
68	205.8	206.0		1575.	.7836	.9865
69	205.8	205.8		1574.	.7879	.9869
70	205.8	205.8		1574.	.7921	.9875
71	205.8	205.8		1575.	.7964	.9877
72	205.8	205.6		1575.	.7997	.9883
73	205.7	205.6		1575.	.8038	.9902
74	205.7	205.6		1574.	.8079	.9918
75	205.6	205.6		1575.	.8112	.9931
76	205.6	205.6		1575.	.8147	.9931
77	205.8	205.6		1575.	.8177	.9928
78	205.7	205.6		1575.	.8210	.9930
79	205.8	205.6		1575.	.8240	.9929
80	205.8	205.8		1575.	.8272	.9929
81	205.8	206.1		1574.	.8302	.9944
82	205.8	205.8		1575.	.8328	.9947

NATIONAL AERONAUTICS AND SPACE ADMINISTRATION AMES RESEARCH CENTER MOFFETT FIELD CALIF. *** PRELIMINARY DATA ***
3.5 FT HYPERSONIC WIND TUNNEL
CONSTANT SET 100 * GAS-TEMP-PROBE MACH NO.=7.35 WEDGE ANG=0 PROBE ANG=0

TEST 227
RUN 1/7

FRAME NO.	TIME (SEC)	STRUT IN POS	ITR (R)	TEMPERATURE IN DEGREES RANKINE TC1	TC2
83	40.015	90.35	540.	1316.	1566.
84	40.515	90.36	540.	1321.	1567.
85	41.015	90.35	540.	1324.	1567.
86	41.515	90.32	540.	1328.	1568.
87	42.015	90.32	540.	1332.	1567.
88	42.515	90.31	540.	1335.	1567.
89	43.015	90.31	540.	1339.	1567.
90	43.515	90.30	540.	1342.	1567.
91	44.015	90.32	540.	1345.	1568.
92	44.515	90.31	540.	1348.	1567.
93	45.015	90.31	540.	1351.	1564.
94	45.515	90.34	540.	1354.	1564.
95	46.015	90.34	540.	1356.	1564.
96	46.515	90.35	540.	1359.	1563.
97	47.015	90.37	540.	1362.	1564.
98	47.515	90.40	540.	1364.	1567.
99	48.015	90.44	540.	1366.	1568.
100	48.515	90.46	540.	1369.	1568.
101	49.015	90.46	540.	1370.	1568.
102	49.515	90.52	540.	1373.	1571.
103	50.015	90.52	540.	1375.	1571.
104	50.515	90.52	540.	1377.	1571.
105	51.015	90.51	540.	1379.	1571.
106	51.515	90.49	540.	1381.	1572.
107	52.015	90.45	540.	1383.	1573.
108	52.515	90.38	540.	1385.	1574.
109	53.015	90.33	540.	1387.	1574.
110	53.515	90.28	540.	1388.	1574.
111	54.015	90.26	540.	1390.	1574.
112	54.515	90.22	540.	1392.	1571.
113	55.015	90.19	540.	1393.	1568.
114	55.515	90.18	540.	1395.	1567.
115	56.015	90.17	540.	1396.	1567.
116	56.515	90.17	540.	1397.	1570.
117	57.015	90.19	540.	1399.	1572.
118	57.515	90.22	540.	1400.	1574.
119	58.015	90.24	540.	1401.	1574.
120	58.515	90.27	540.	1403.	1573.
121	59.015	90.29	540.	1404.	1572.
122	59.515	90.33	540.	1405.	1571.

ORIGINAL PAGE IS OF POOR QUALITY

23

NATIONAL AERONAUTICS AND SPACE ADMINISTRATION AMES RESEARCH CENTER MOFFETT FIELD CALIF. *** PRELIMINARY DATA ***
3.5 FT HYPERSONIC WIND TUNNEL
CONSTANT SET 100 * GAS-TEMP-PROBE MACH NO.=7.35 WEDGE ANG=0 PROBE ANG=0

TEST 227
RUN 1/8

FRAME NO.	PT (PSIA)	PT CELL 2 (PSIA)	PCH /P	TT (DEGR)	PROBE / TOTAL TEMPERATURE RATIO PROB1	PROB2
83	205.8	205.8		1575.	.8356	.9944
84	205.8	206.1		1576.	.8382	.9942
85	205.8	206.0		1576.	.8404	.9945
86	205.8	205.8		1575.	.8427	.9954
87	205.8	206.1		1576.	.8450	.9945
88	205.8	206.1		1576.	.8469	.9945
89	205.8	205.8		1577.	.8492	.9941
90	205.8	205.6		1577.	.8507	.9939
91	205.8	205.8		1577.	.8528	.9942
92	205.8	205.8		1576.	.8551	.9940
93	205.8	206.1		1576.	.8572	.9924
94	205.8	205.6		1576.	.8592	.9924
95	205.8	205.6		1576.	.8603	.9921
96	205.8	205.8		1576.	.8619	.9916
97	205.7	205.8		1576.	.8639	.9925
98	205.8	206.0		1576.	.8650	.9938
99	205.8	206.1		1576.	.8666	.9947
100	205.7	205.8		1576.	.8683	.9947
101	205.7	205.6		1577.	.8689	.9942
102	205.6	206.1		1578.	.8701	.9952
103	205.7	206.0		1578.	.8716	.9961
104	205.8	205.8		1577.	.8734	.9962
105	205.8	205.9		1577.	.8745	.9963
106	205.8	205.6		1577.	.8758	.9968
107	205.8	205.8		1577.	.8771	.9972
108	205.7	205.8		1577.	.8780	.9978
109	205.8	205.8		1577.	.8794	.9981
110	205.8	206.0		1577.	.8803	.9979
111	205.8	205.6		1577.	.8813	.9978
112	205.7	205.6		1578.	.8824	.9960
113	205.8	205.8		1577.	.8832	.9942
114	205.8	205.6		1577.	.8845	.9937
115	205.8	206.1		1577.	.8849	.9936
116	205.8	206.0		1578.	.8851	.9946
117	205.8	206.4		1578.	.8862	.9958
118	205.8	206.1		1579.	.8869	.9967
119	205.8	205.8		1579.	.8872	.9964
120	205.8	205.6		1579.	.8882	.9956
121	205.6	205.8		1579.	.8890	.9954
122	205.7	206.0		1579.	.8895	.9948

ORIGINAL PAGE IS OF POOR QUALITY

24

NATIONAL AERONAUTICS AND SPACE ADMINISTRATION AMES RESEARCH CENTER MOFFETT FIELD CALIF. *** PRELIMINARY DATA ***
3.5 FT HYPERSONIC WIND TUNNEL
CONSTANT SET 100 * GAS-TEMP-PROBE MACH NO.=7.35 WEDGE ANG=0 PROBE ANG=0

TEST 227
RUN 1/10

FRAME NO.	TIME (SEC)	STRUT IN POS	TTR (R)	TEMPERATURE IN DEGREES RANKINE TC1	TC2
123	60.015	90.35	540.	1406.	1571.
124	60.515	90.36	540.	1407.	1571.
125	61.015	90.35	540.	1408.	1571.
126	61.515	90.36	540.	1409.	1571.
127	62.015	90.35	540.	1410.	1571.
128	62.515	90.34	540.	1411.	1572.
129	63.015	90.33	540.	1412.	1571.
130	63.515	90.32	540.	1414.	1571.
131	64.015	90.31	540.	1414.	1572.
132	64.515	90.32	540.	1415.	1572.
133	65.015	90.33	540.	1416.	1571.
134	65.515	90.35	540.	1417.	1572.
135	66.015	90.38	540.	1418.	1572.
136	66.515	90.41	540.	1418.	1572.
137	67.015	90.42	540.	1419.	1572.
138	67.515	90.48	540.	1419.	1572.
139	68.015	90.52	540.	1421.	1575.
140	68.515	47.65	540.	1422.	1574.
141	69.015	47.63	540.	1422.	1572.
142	69.515	4.95	540.	1422.	1567.
143	70.015	4.96	540.	1422.	1560.
144	70.515	4.95	540.	1422.	1553.
145	71.015	4.96	540.	1421.	1545.

ORIGINAL PAGE IS
OF POOR QUALITY

25

NATIONAL AERONAUTICS AND SPACE ADMINISTRATION AMES RESEARCH CENTER MOFFETT FIELD CALIF. *** PRELIMINARY DATA ***
3.5 FT HYPERSONIC WIND TUNNEL
CONSTANT SET 100 * GAS-TEMP-PROBE MACH NO.=7.35 WEDGE ANG=0 PROBE ANG=0

TEST 227
RUN 1/11

FRAME NO.	PT (PSIA)	PT CELL 2 (PSIA)	PCH /P	TT (DEGR)	PROBE / TOTAL TEMPERATURE RATIO PROB1	PROB2
123	205.7	205.6		1579.	.8907	.9950
124	205.6	205.6		1579.	.8912	.9949
125	205.6	205.6		1579.	.8917	.9950
126	205.7	205.8		1580.	.8915	.9942
127	205.8	205.6		1580.	.8924	.9941
128	205.7	205.8		1580.	.8930	.9946
129	205.8	205.6		1580.	.8936	.9942
130	205.7	205.6		1580.	.8947	.9945
131	205.7	205.6		1580.	.8950	.9948
132	205.7	205.8		1580.	.8953	.9948
133	205.7	205.8		1580.	.8957	.9943
134	205.8	205.6		1580.	.8971	.9949
135	205.8	205.8		1580.	.8976	.9951
136	205.8	206.1		1580.	.8975	.9948
137	205.8	206.1		1579.	.8983	.9954
138	205.8	206.1		1580.	.8985	.9951
139	205.8	206.1		1580.	.8993	.9965
140	205.8	206.2		1580.	.9000	.9967
141	205.8	206.1		1580.	.9000	.9948
142	205.9	206.4		1580.	.8999	.9914
143	205.8	206.2		1580.	.8996	.9871
144	205.9	206.5		1580.	.8999	.9830
145	206.1	206.4		1579.	.8999	.9786
				A * V * E * R * A * G * E	V * A * L * U * E * S	
	205.8	205.8	0.00	0.00 1570.	.716	.903

RADIUS(IN) 12. 9. 6. 3. 0.

AVERAGE TEMPERATURE IN 12 IN.DIA., 18 IN.DIA., 24 IN.DIA., 30 IN.DIA., 36 IN.DIA. CORE.
I I .993 .945 .945

ORIGINAL PAGE IS
OF POOR QUALITY

NATIONAL AERONAUTICS AND SPACE ADMINISTRATION AMES RESEARCH CENTER MOFFETT FIELD CALIF. *** PRELIMINARY DATA ***

3.5 FT HYPERSONIC WIND TUNNEL TEST 227

CONSTANT SET 10C * GAS-TEMP-PROBE MACH NO.=7.35 WEDGE ANG=0 PROBE ANG=0 RUN 2/1

FRAME NO.	TIME (SEC)	STRUT IN POS	TTR (R)	TEMPERATURE IN DEGREES RANKINE TC1	TC2
3	.014	5.05	540.	541.	543.
4	.515	5.06	540.	541.	543.
5	1.015	5.05	540.	541.	543.
6	1.515	5.05	540.	541.	543.
7	2.015	48.71	540.	541.	543.
8	2.515	48.69	540.	541.	547.
9	3.015	60.38	540.	566.	957.
10	3.515	92.47	540.	608.	1225.
11	4.015	92.46	540.	657.	1364.
12	4.515	92.48	540.	710.	1453.
13	5.015	92.47	540.	765.	1505.
14	5.515	92.48	540.	818.	1535.
15	6.015	92.49	540.	871.	1550.
16	6.515	92.50	540.	921.	1560.
17	7.015	92.53	540.	968.	1566.
18	7.515	92.55	540.	1012.	1574.
19	8.015	92.56	540.	1052.	1580.
20	8.515	92.60	540.	1090.	1586.
21	9.015	92.65	540.	1124.	1593.
22	9.515	92.67	540.	1155.	1596.
23	10.015	92.69	540.	1184.	1600.
24	10.515	92.71	540.	1210.	1599.
25	11.015	92.74	540.	1233.	1595.
26	11.515	92.74	540.	1254.	1594.
27	12.015	92.73	540.	1272.	1591.
28	12.515	92.71	540.	1289.	1596.
29	13.015	92.68	540.	1304.	1595.
30	13.515	92.65	540.	1318.	1597.
31	14.015	92.62	540.	1330.	1599.
32	14.515	92.57	540.	1342.	1595.
33	15.015	92.53	540.	1353.	1589.
34	15.515	92.48	540.	1362.	1588.
35	16.015	92.41	540.	1371.	1589.
36	16.515	92.39	540.	1379.	1593.
37	17.015	92.34	540.	1386.	1594.
38	17.515	92.33	540.	1393.	1598.
39	18.015	92.32	540.	1400.	1596.
40	18.515	92.32	540.	1405.	1593.
41	19.015	92.31	540.	1411.	1593.
42	19.515	92.32	540.	1416.	1590.

ORIGINAL PAGE IS OF POOR QUALITY

PRINTED IN U.S.A.

NATIONAL AERONAUTICS AND SPACE ADMINISTRATION AMES RESEARCH CENTER MOFFETT FIELD CALIF. *** PRELIMINARY DATA ***

3.5 FT HYPERSONIC WIND TUNNEL — TEST 227

CONSTANT SET 100 * GAS-TEMP-PROBE MACH NO.=7.35 WEDGE ANG=0 PROBE ANG=0 — RUN 2/2

FRAME NO.	PT (PSIA)	PT CELL 2 (PSIA)	PCH /P	TT (DEGR)	PROBE / TOTAL TEMPERATURE RATIO PROB1	PROB2
3	1003.9	1005.2		1606.	.3366	.3382
4	1004.3	1005.2		1606.	.3367	.3381
5	1004.3	1005.2		1606.	.3367	.3381
6	1004.4	1005.2		1606.	.3368	.3382
7	1004.3	1005.1		1605.	.3372	.3383
8	1004.1	1005.0		1607.	.3366	.3401
9	1003.9	1005.1		1606.	.3523	.5954
10	1003.7	1005.0		1607.	.3782	.7620
11	1003.7	1005.0		1606.	.4089	.8489
12	1003.5	1005.0		1607.	.4418	.9043
13	1003.8	1004.9		1607.	.4758	.9362
14	1003.7	1004.9		1608.	.5089	.9547
15	1003.5	1004.9		1607.	.5417	.9644
16	1003.7	1004.9		1607.	.5732	.9707
17	1003.7	1004.9		1606.	.6024	.9749
18	1003.8	1004.9		1606.	.6301	.9801
19	1004.0	1004.9		1606.	.6552	.9839
20	1004.2	1004.9		1606.	.6787	.9879
21	1004.2	1004.9		1607.	.6993	.9911
22	1004.3	1004.9		1608.	.7187	.9924
23	1004.2	1004.9		1609.	.7356	.9941
24	1004.1	1004.8		1610.	.7515	.9936
25	1004.1	1004.8		1608.	.7665	.9921
26	1004.1	1004.8		1607.	.7801	.9917
27	1004.1	1004.8		1607.	.7916	.9903
28	1003.9	1004.8		1607.	.8021	.9932
29	1003.7	1004.7		1607.	.8112	.9921
30	1003.2	1004.7		1607.	.8201	.9938
31	1003.7	1004.7		1607.	.8278	.9950
32	1003.3	1004.7		1607.	.8355	.9931
33	1003.7	1004.7		1606.	.8420	.9892
34	1003.9	1004.7		1606.	.8483	.9888
35	1004.0	1004.7		1605.	.8540	.9902
36	1003.7	1004.7		1604.	.8596	.9935
37	1003.7	1004.7		1603.	.8645	.9940
38	1003.8	1004.6		1603.	.8692	.9971
39	1003.4	1004.6		1602.	.8735	.9963
40	1004.0	1004.6		1603.	.8760	.9938
41	1004.0	1004.6		1605.	.8788	.9923
42	1004.0	1004.6		1607.	.8810	.9894

ORIGINAL PAGE IS OF POOR QUALITY

NATIONAL AERONAUTICS AND SPACE ADMINISTRATION AMES RESEARCH CENTER MOFFETT FIELD CALIF. *** PRELIMINARY DATA ***
3.5 FT HYPERSONIC WIND TUNNEL
CONSTANT SET 100 * GAS-TEMP-PROBE MACH NO.=7.35 WEDGE ANG=0 PROBE ANG=0

TEST 227
RUN 2/4

FRAME NO.	TIME (SEC)	STRUT IN POS	TTR (R)	TEMPERATURE IN DEGREES RANKINE TC1	TC2
43	20.015	92.34	540.	1419.	1590.
44	20.515	92.37	540.	1424.	1593.
45	21.015	92.42	540.	1428.	1593.
46	21.515	92.45	540.	1432.	1591.
47	22.015	92.48	540.	1435.	1591.
48	22.515	92.51	540.	1438.	1592.
49	23.015	92.53	540.	1442.	1592.
50	23.515	92.56	540.	1445.	1589.
51	24.015	92.55	540.	1447.	1590.
52	24.515	92.56	540.	1449.	1589.
53	25.015	92.55	540.	1452.	1588.
54	25.515	92.54	540.	1454.	1581.
55	26.015	92.52	540.	1455.	1577.
56	26.515	92.53	540.	1456.	1576.
57	27.015	92.51	540.	1458.	1578.
58	27.515	92.50	540.	1460.	1579.
59	28.015	92.50	540.	1461.	1579.
60	28.515	92.48	540.	1463.	1578.
61	29.015	92.49	540.	1464.	1577.
62	29.515	92.47	540.	1465.	1578.
63	30.015	92.48	540.	1467.	1580.
64	30.515	92.48	540.	1469.	1580.
65	31.015	92.48	540.	1470.	1578.
66	31.515	92.50	540.	1471.	1574.
67	32.015	92.52	540.	1472.	1573.
68	32.515	92.54	540.	1473.	1577.
69	33.015	92.56	540.	1475.	1577.
70	33.515	92.59	540.	1475.	1572.
71	34.015	92.61	540.	1476.	1573.
72	34.515	92.66	540.	1477.	1572.
73	35.015	92.67	540.	1478.	1572.
74	35.515	92.70	540.	1479.	1573.
75	36.015	92.73	540.	1480.	1571.
76	36.515	92.75	540.	1481.	1573.
77	37.015	92.76	540.	1482.	1568.
78	37.515	92.75	540.	1482.	1566.
79	38.015	92.74	540.	1483.	1565.
80	38.515	92.72	540.	1483.	1566.
81	39.015	92.67	540.	1483.	1565.
82	39.515	92.62	540.	1484.	1567.

ORIGINAL PAGE IS OF POOR QUALITY

PRINTED IN U.S.A.

NATIONAL AERONAUTICS AND SPACE ADMINISTRATION AMES RESEARCH CENTER MOFFETT FIELD CALIF. *** PRELIMINARY DATA ***
3.5 FT HYPERSONIC WIND TUNNEL TEST 227
CONSTANT SET 100 * GAS-TEMP-PROBE MACH NO.=7.35 WEDGE ANG=0 PROBE ANG=0 RUN 2/5

FRAME NO.	PT (PSIA)	PT CELL 2 (PSIA)	PCH /P	TT (DEGR)	PROBE / TOTAL TEMPERATURE RATIO PROB1	PROB2
43	1003.9	1004.6		1606.	.8837	.9902
44	1003.8	1004.6		1605.	.8873	.9929
45	1003.6	1004.6		1603.	.8906	.9939
46	1003.2	1004.5		1602.	.8938	.9932
47	1002.5	1004.6		1603.	.8954	.9931
48	1002.5	1004.5		1602.	.8978	.9938
49	1002.5	1004.5		1602.	.8999	.9939
50	1002.8	1004.5		1603.	.9013	.9913
51	1003.4	1004.4		1602.	.9033	.9923
52	1004.0	1004.5		1601.	.9051	.9920
53	1003.9	1004.5		1600.	.9074	.9925
54	1004.1	1004.5		1599.	.9093	.9891
55	1004.1	1004.5		1597.	.9113	.9872
56	1004.2	1004.5		1598.	.9117	.9864
57	1004.2	1004.4		1597.	.9129	.9879
58	1004.3	1004.4		1599.	.9132	.9880
59	1004.3	1004.4		1600.	.9130	.9871
60	1004.0	1004.4		1601.	.9137	.9858
61	1003.8	1004.5		1601.	.9144	.9851
62	1003.9	1004.4		1600.	.9155	.9857
63	1003.5	1004.4		1601.	.9156	.9870
64	1003.4	1004.4		1600.	.9176	.9873
65	1003.3	1004.4		1601.	.9182	.9856
66	1004.1	1004.4		1600.	.9192	.9839
67	1004.0	1004.4		1599.	.9202	.9836
68	1003.9	1004.4		1598.	.9222	.9870
69	1003.9	1004.4		1595.	.9243	.9888
70	1003.7	1004.3		1595.	.9248	.9853
71	1003.7	1004.3		1595.	.9257	.9848
72	1003.7	1004.3		1595.	.9264	.9856
73	1003.4	1004.4		1594.	.9271	.9857
74	1003.0	1004.4		1595.	.9272	.9873
75	1002.9	1004.3		1595.	.9278	.9854
76	1003.7	1004.1		1593.	.9299	.9856
77	1003.8	1004.3		1593.	.9301	.9841
78	1004.2	1004.2		1593.	.9303	.9831
79	1004.2	1004.1		1593.	.9306	.9825
80	1004.3	1004.2		1593.	.9307	.9832
81	1004.2	1004.3		1593.	.9313	.9829
82	1004.1	1004.2		1593.	.9315	.9837

NATIONAL AERONAUTICS AND SPACE ADMINISTRATION AMES RESEARCH CENTER MOFFETT FIELD CALIF. *** PRELIMINARY DATA ***

3.5 FT HYPERSONIC WIND TUNNEL TEST 227

CONSTANT SET 100 * GAS-TEMP-PROBE MACH NO.=7.35 WEDGE ANG=0 PROBE ANG=0 RUN 2/7

FRAME NO.	TIME (SEC)	STRUT IN POS	TTR (R)	TEMPERATURE IN DEGREES RANKINE TC1	TC2
83	40.015	92.61	540.	1485.	1569.
84	40.515	92.56	540.	1486.	1569.
85	41.015	92.52	540.	1486.	1570.
86	41.515	92.48	540.	1487.	1574.
87	42.015	92.45	540.	1489.	1571.
88	42.515	92.41	540.	1490.	1570.
89	43.015	92.38	540.	1490.	1570.
90	43.515	92.36	540.	1491.	1569.
91	44.015	92.34	541.	1491.	1568.
92	44.515	92.34	541.	1493.	1570.
93	45.015	92.32	541.	1494.	1572.
94	45.515	92.34	541.	1494.	1568.
95	46.015	92.37	541.	1494.	1564.
96	46.515	92.39	541.	1494.	1562.
97	47.015	92.42	541.	1495.	1567.
98	47.515	92.46	541.	1496.	1568.
99	48.015	92.51	541.	1497.	1570.
100	48.515	92.53	541.	1498.	1569.
101	49.015	92.56	541.	1498.	1573.
102	49.515	92.56	541.	1499.	1572.
103	50.015	92.55	541.	1500.	1571.
104	50.515	92.53	541.	1500.	1568.
105	51.015	92.51	541.	1501.	1567.
106	51.515	92.50	541.	1501.	1566.
107	52.015	92.49	541.	1501.	1564.
108	52.515	92.47	541.	1502.	1565.
109	53.015	92.45	541.	1502.	1568.
110	53.515	92.47	541.	1502.	1569.
111	54.015	92.47	541.	1503.	1569.
112	54.515	92.46	541.	1504.	1569.
113	55.015	92.49	541.	1505.	1568.
114	55.515	92.52	541.	1505.	1569.
115	56.015	92.53	541.	1505.	1568.
116	56.515	92.56	541.	1506.	1569.
117	57.015	92.61	541.	1507.	1570.
118	57.515	92.65	541.	1508.	1571.
119	58.015	92.68	541.	1508.	1569.
120	58.515	92.71	541.	1508.	1568.
121	59.015	92.73	541.	1508.	1555.
122	59.515	92.72	541.	1507.	1555.

ORIGINAL PAGE IS OF POOR QUALITY

PRINTED IN U.S.A.

NATIONAL AERONAUTICS AND SPACE ADMINISTRATION AMES RESEARCH CENTER MOFFETT FIELD CALIF. *** PRELIMINARY DATA ***

3.5 FT HYPERSONIC WIND TUNNEL TEST 227

CONSTANT SET 100 + GAS-TEMP-PROBE MACH NO.=7.35 WEDGE ANG=0 PROBE ANG=0 RUN 2/8

FRAME NO.	PT (PSIA)	PT CELL 2 (PSIA)	PCH /P	TT (DEGR)	PROBE / TOTAL TEMPERATURE RATIO PROB1	PROB2
83	1004.2	1004.3		1593.	.9322	.9849
84	1004.3	1004.3		1593.	.9326	.9850
85	1004.5	1004.2		1594.	.9327	.9853
86	1004.4	1004.1		1593.	.9339	.9881
87	1004.4	1004.3		1592.	.9351	.9857
88	1004.0	1004.1		1592.	.9355	.9857
89	1003.9	1003.9		1593.	.9357	.9859
90	1003.4	1004.1		1593.	.9361	.9855
91	1002.9	1004.1		1593.	.9360	.9844
92	1003.3	1004.2		1593.	.9372	.9858
93	1002.5	1003.9		1592.	.9385	.9878
94	1003.3	1004.0		1590.	.9394	.9858
95	1003.4	1003.9		1590.	.9398	.9838
96	1003.8	1004.0		1590.	.9398	.9821
97	1002.5	1004.1		1590.	.9405	.9857
98	1003.8	1003.9		1590.	.9412	.9864
99	1003.5	1003.9		1590.	.9415	.9877
100	1003.8	1003.9		1592.	.9410	.9858
101	1004.0	1003.9		1592.	.9409	.9876
102	1004.0	1003.7		1593.	.9410	.9868
103	1004.2	1003.7		1592.	.9424	.9869
104	1004.1	1003.7		1591.	.9432	.9857
105	1004.1	1003.9		1591.	.9437	.9851
106	1004.1	1003.7		1590.	.9443	.9816
107	1004.0	1003.7		1590.	.9443	.9833
108	1004.0	1003.7		1588.	.9453	.9852
109	1004.1	1003.7		1588.	.9456	.9873
110	1004.2	1003.7		1589.	.9454	.9874
111	1004.2	1003.7		1589.	.9456	.9872
112	1003.9	1003.7		1588.	.9473	.9882
113	1003.8	1003.7		1589.	.9469	.9868
114	1003.9	1003.7		1588.	.9476	.9875
115	1003.9	1003.7		1588.	.9479	.9873
116	1004.0	1003.7		1588.	.9481	.9878
117	1003.9	1003.7		1587.	.9494	.9895
118	1003.9	1003.7		1587.	.9499	.9898
119	1004.1	1003.6		1588.	.9496	.9880
120	1004.0	1003.6		1588.	.9496	.9849
121	1004.1	1003.6		1589.	.9495	.9791
122	1004.1	1003.6		1588.	.9493	.9796

NATIONAL AERONAUTICS AND SPACE ADMINISTRATION AMES RESEARCH CENTER MOFFETT FIELD CALIF. *** PRELIMINARY DATA ***
3.5 FT HYPERSONIC WIND TUNNEL TEST 227
CONSTANT SET 1C0 * GAS-TEMP-PROBE MACH NO.=7.35 WEDGE ANG=0 PROBE ANG=0 RUN 2/10

FRAME NO.	TIME (SEC)	STRUT IN POS	TTR (R)	TEMPERATURE IN DEGREES RANKINE TC1	TC2
123	60.015	92.70	541.	1507.	1557.
124	60.515	92.67	541.	1507.	1558.
125	61.015	92.64	541.	1507.	1564.
126	61.515	92.60	542.	1508.	1566.
127	62.015	92.55	542.	1508.	1562.
128	62.515	92.49	542.	1508.	1562.
129	63.015	92.46	542.	1508.	1566.
130	63.515	92.41	542.	1508.	1567.
131	64.015	92.40	542.	1509.	1567.
132	64.515	92.35	542.	1509.	1566.
133	65.015	92.34	542.	1510.	1562.
134	65.515	92.32	542.	1509.	1558.
135	66.015	48.61	542.	1509.	1562.
136	66.515	48.62	542.	1510.	1554.
137	67.015	5.05	542.	1509.	1547.
138	67.515	5.06	542.	1510.	1542.
139	68.015	5.06	542.	1509.	1538.

ORIGINAL PAGE IS OF POOR QUALITY

NATIONAL AERONAUTICS AND SPACE ADMINISTRATION AMES RESEARCH CENTER MOFFETT FIELD CALIF. *** PRELIMINARY DATA ***

3.5 FT HYPERSONIC WIND TUNNEL TEST 227

CONSTANT SET 100 * GAS-TEMP-PROBE MACH NO.=7.35 WEDGE ANG=0 PROBE ANG=0 RUN 2/11

FRAME NO.	PT (PSIA)	PT CELL 2 (PSIA)	PCH /P	TT (DEGR)	PROBE / TOTAL TEMPERATURE RATIO PROB1	PROB2
123	1004.1	1003.6		1588.	.9492	.9833
124	1003.9	1003.6		1588.	.9491	.9812
125	1003.8	1003.6		1587.	.9495	.9852
126	1003.5	1003.7		1587.	.9499	.9868
127	1003.4	1003.6		1587.	.9500	.9844
128	1003.4	1003.6		1587.	.9502	.9842
129	1003.3	1003.6		1586.	.9508	.9874
130	1003.5	1003.5		1585.	.9516	.9835
131	1003.7	1003.5		1585.	.9523	.9889
132	1003.4	1003.5		1587.	.9513	.9869
133	1002.9	1003.6		1587.	.9511	.9841
134	1003.3	1003.6		1586.	.9520	.9827
135	1003.8	1003.6		1585.	.9526	.9859
136	1004.2	1003.6		1585.	.9525	.9804
137	1004.4	1003.6		1583.	.9531	.9769
138	1004.1	1003.4		1583.	.9538	.9745
139	1003.9	1003.5		1584.	.9532	.9713

A * V * E * R * A * G * E V * A * L * U * E * S

1003.8	1004.3	0.00	0.00	1597.	.852	.952

RADIUS(IN) 12. 9. 6. 3. 0.

AVERAGE TEMPERATURE IN 12 IN.DIA., 18 IN.DIA., 24 IN.DIA., 30 IN.DIA., 36 IN.DIA. CORE.

0.000 0.000 .983 .967 .967

NATIONAL AERONAUTICS AND SPACE ADMINISTRATION AMES RESEARCH CENTER MOFFETT FIELD CALIF. *** PRELIMINARY DATA ***
3.5 FT HYPERSONIC WIND TUNNEL
CONSTANT SET 100 * GAS-TEMP-PROBE MACH NO.=7.35 WEDGE ANG=0 PROBE ANG=0

TEST 227
RUN 3/1

FRAME NO.	TIME (SEC)	STRUT IN POS	TTR (R)	TEMPERATURE IN DEGREES RANKINE TC1	TC2
3	.014	5.07	546.	551.	553.
4	.515	5.06	546.	551.	553.
5	1.015	5.06	546.	550.	554.
6	1.515	5.06	546.	551.	553.
7	2.015	5.07	546.	551.	553.
8	2.515	5.07	546.	551.	553.
9	3.015	48.81	546.	550.	553.
10	3.515	48.81	546.	552.	599.
11	4.015	92.67	546.	556.	775.
12	4.515	92.70	546.	554.	931.
13	5.015	92.71	546.	575.	1073.
14	5.515	92.73	546.	590.	1193.
15	6.015	92.75	546.	608.	1291.
16	6.515	92.77	546.	626.	1365.
17	7.015	92.81	546.	647.	1431.
18	7.515	92.82	546.	667.	1481.
19	8.015	92.84	546.	689.	1523.
20	8.515	92.87	546.	712.	1557.
21	9.015	92.88	546.	736.	1586.
22	9.515	92.88	546.	760.	1614.
23	10.015	92.89	546.	784.	1638.
24	10.515	92.88	546.	809.	1658.
25	11.015	92.86	546.	834.	1675.
26	11.515	92.85	546.	859.	1689.
27	12.015	92.85	546.	883.	1704.
28	12.515	92.82	546.	908.	1718.
29	13.015	92.79	546.	932.	1729.
30	13.515	92.77	546.	956.	1738.
31	14.015	92.73	546.	979.	1745.
32	14.515	92.70	546.	1002.	1752.
33	15.015	92.66	546.	1024.	1759.
34	15.515	92.65	546.	1046.	1764.
35	16.015	92.60	546.	1068.	1772.
36	16.515	92.57	546.	1090.	1781.
37	17.015	92.55	546.	1112.	1793.
38	17.515	92.52	546.	1134.	1800.
39	18.015	92.51	546.	1156.	1808.
40	18.515	92.48	546.	1177.	1813.
41	19.015	92.48	546.	1198.	1815.
42	19.515	92.44	546.	1219.	1815.

NATIONAL AERONAUTICS AND SPACE ADMINISTRATION AMES RESEARCH CENTER MOFFETT FIELD CALIF. *** PRELIMINARY DATA ***

3.5 FT HYPERSONIC WIND TUNNEL

CONSTANT SET 100 * GAS-TEMP-PROBE MACH NO.=7.35 WEDGE ANG=0 PROBE ANG=0

TEST 227
RUN 3/2

FRAME NO.	PT (PSIA)	PT CELL 2 (PSIA)	PCH /P	TT (DEGR)	PROBE / TOTAL TEMPERATURE RATIO PROB1	PROB2
3	206.2	206.3		1853.	.2972	.2986
4	206.2	206.5		1855.	.2969	.2984
5	206.1	206.2		1855.	.2968	.2985
6	206.1	206.5		1855.	.2969	.2983
7	205.9	206.3		1856.	.2966	.2982
8	206.1	206.2		1856.	.2968	.2982
9	206.1	206.2		1857.	.2964	.2980
10	206.1	206.3		1857.	.2972	.3224
11	206.1	206.3		1860.	.2989	.4168
12	206.2	206.4		1863.	.3030	.4992
13	206.2	206.5		1867.	.3080	.5749
14	206.2	206.6		1871.	.3153	.6380
15	206.2	206.5		1874.	.3243	.6888
16	206.2	206.6		1875.	.3340	.7283
17	206.2	206.4		1878.	.3446	.7615
18	206.2	206.4		1880.	.3549	.7877
19	206.2	206.6		1882.	.3663	.8095
20	206.2	206.6		1883.	.3783	.8268
21	206.2	206.6		1886.	.3901	.8412
22	206.2	206.6		1888.	.4025	.8549
23	206.2	206.7		1888.	.4151	.8672
24	206.2	206.4		1890.	.4280	.8776
25	206.2	206.3		1892.	.4405	.8849
26	206.2	206.5		1895.	.4530	.8914
27	206.2	206.4		1897.	.4655	.8984
28	206.2	206.3		1899.	.4780	.9048
29	206.2	206.5		1900.	.4906	.9100
30	206.2	206.3		1903.	.5023	.9133
31	206.1	206.3		1903.	.5145	.9168
32	205.9	206.2		1904.	.5264	.9202
33	205.9	206.2		1904.	.5378	.9236
34	205.9	206.1		1905.	.5492	.9260
35	206.1	206.2		1907.	.5604	.9292
36	206.1	206.2		1907.	.5715	.9338
37	206.2	206.4		1907.	.5832	.9387
38	206.2	206.4		1907.	.5946	.9437
39	206.2	206.5		1907.	.6059	.9478
40	206.2	206.7		1908.	.6167	.9500
41	206.2	206.7		1908.	.6277	.9510
42	206.2	206.4		1909.	.6382	.9507

NATIONAL AERONAUTICS AND SPACE ADMINISTRATION AMES RESEARCH CENTER MOFFETT FIELD CALIF. *** PRELIMINARY DATA ***

9.5 FT HYPERSONIC WIND TUNNEL

CONSTANT SET 100 * GAS-TEMP-PROBE MACH NO.=7.35 WEDGE ANG=0 PROBE ANG=0

TEST 227
RUN 3/4

FRAME NO.	TIME (SEC)	STRUT IN POS	TTR (R)	TEMPERATURE IN DEGREES RANKINE TC1	TC2
43	20.015	92.45	546.	1238.	1816.
44	20.515	92.45	546.	1258.	1819.
45	21.015	92.46	547.	1277.	1823.
46	21.515	92.47	547.	1296.	1826.
47	22.015	92.49	547.	1314.	1830.
48	22.515	92.51	547.	1331.	1834.
49	23.015	92.53	547.	1348.	1835.
50	23.515	92.55	547.	1365.	1838.
51	24.015	92.57	546.	1380.	1839.
52	24.515	92.61	547.	1395.	1840.
53	25.015	92.64	547.	1409.	1840.
54	25.515	92.66	547.	1424.	1841.
55	26.015	92.68	547.	1437.	1842.
56	26.515	92.69	547.	1450.	1844.
57	27.015	92.69	547.	1462.	1847.
58	27.515	92.70	547.	1474.	1850.
59	28.015	92.68	547.	1485.	1853.
60	28.515	92.67	547.	1495.	1854.
61	29.015	92.66	547.	1506.	1854.
62	29.515	92.65	547.	1516.	1855.
63	30.015	92.64	547.	1525.	1856.
64	30.515	92.63	547.	1534.	1854.
65	31.015	92.63	547.	1542.	1856.
66	31.515	92.61	547.	1551.	1856.
67	32.015	92.61	547.	1558.	1855.
68	32.515	92.60	547.	1565.	1856.
69	33.015	92.61	547.	1573.	1859.
70	33.515	92.63	547.	1579.	1860.
71	34.015	92.63	547.	1586.	1860.
72	34.515	92.63	547.	1592.	1860.
73	35.015	92.66	547.	1598.	1860.
74	35.515	92.69	547.	1603.	1859.
75	36.015	92.70	547.	1609.	1859.
76	36.515	92.73	547.	1613.	1857.
77	37.015	92.76	547.	1618.	1857.
78	37.515	92.80	547.	1622.	1855.
79	38.015	92.84	547.	1627.	1852.
80	38.515	92.88	547.	1630.	1851.
81	39.015	92.89	547.	1634.	1853.
82	39.515	92.89	547.	1638.	1855.

ORIGINAL PAGE IS OF POOR QUALITY

NATIONAL AERONAUTICS AND SPACE ADMINISTRATION AMES RESEARCH CENTER MOFFETT FIELD CALIF. *** PRELIMINARY DATA ***
3.5 FT HYPERSONIC WIND TUNNEL
CONSTANT SET 1CO + GAS-TEMP-PROBE MACH NO.=7.39 WEDGE ANG=0 PROBE ANG=0

TEST 227
RUN 3/5

FRAME NO.	PT (PSIA)	PT CELL 2 (PSIA)	PCH (P	TT (DEGR)	PROBE / TOTAL TEMPERATURE RATIO PROB1	PROB2
43	206.2	206.5		1909.	.6484	.9511
44	206.2	206.3		1909.	.6591	.9527
45	206.2	206.5		1909.	.6691	.9546
46	206.1	206.4		1909.	.6788	.9564
47	206.2	206.5		1910.	.6879	.9581
48	206.2	206.4		1910.	.6971	.9600
49	206.2	206.6		1911.	.7056	.9615
50	206.2	206.7		1911.	.7143	.9617
51	206.2	206.8		1911.	.7221	.9622
52	206.3	206.5		1911.	.7299	.9626
53	206.3	206.7		1912.	.7372	.9624
54	206.2	206.7		1913.	.7444	.9627
55	206.2	206.6		1912.	.7516	.9631
56	206.2	206.7		1912.	.7581	.9640
57	206.2	206.6		1913.	.7643	.9658
58	206.2	206.7		1913.	.7708	.9675
59	206.3	206.6		1913.	.7763	.9685
60	206.2	206.8		1914.	.7814	.9686
61	206.3	206.7		1914.	.7865	.9687
62	206.2	206.4		1914.	.7919	.9691
63	206.2	206.8		1915.	.7963	.9691
64	206.2	206.7		1916.	.8037	.9679
65	206.2	206.5		1915.	.8052	.9687
66	206.2	206.5		1916.	.8093	.9689
67	206.2	206.5		1916.	.8132	.9686
68	206.2	206.6		1916.	.8170	.9689
69	206.2	206.7		1917.	.8205	.9697
70	206.2	206.6		1918.	.8235	.9698
71	206.2	206.3		1918.	.8269	.9698
72	206.2	206.4		1918.	.8300	.9696
73	206.2	206.5		1919.	.8327	.9693
74	206.2	206.4		1919.	.8355	.9689
75	206.2	206.3		1919.	.8381	.9687
76	206.2	206.5		1919.	.8404	.9676
77	206.2	206.5		1919.	.8431	.9676
78	206.2	206.4		1919.	.8456	.9669
79	206.2	206.8		1918.	.8481	.9653
80	206.2	206.7		1918.	.8500	.9648
81	206.2	206.7		1918.	.8518	.9659
82	206.2	206.7		1918.	.8536	.9676

ORIGINAL PAGE IS OF POOR QUALITY

NATIONAL AERONAUTICS AND SPACE ADMINISTRATION AMES RESEARCH CENTER MOFFETT FIELD CALIF. *** PRELIMINARY DATA ***
3.5 FT HYPERSONIC WIND TUNNEL
CONSTANT SET 1CC * GAS-TEMP-PROBE MACH NO.=7.35 WEDGE ANG=0 PROBE ANG=0

TEST 227
RUN 3/7

FRAME NO.	TIME (SEC)	STRUT IN POS	TTR (R)	TEMPERATURE IN DEGREES RANKINE TC1	TC2
83	40.015	92.88	547.	1641.	1862.
84	40.515	92.87	547.	1644.	1863.
85	41.015	92.83	547.	1648.	1863.
86	41.515	92.78	547.	1650.	1864.
87	42.015	92.74	547.	1653.	1865.
88	42.515	92.68	547.	1656.	1867.
89	43.015	92.65	547.	1659.	1866.
90	43.515	92.61	547.	1662.	1865.
91	44.015	92.58	547.	1664.	1865.
92	44.515	92.54	547.	1667.	1865.
93	45.015	92.51	547.	1669.	1866.
94	45.515	92.50	547.	1671.	1867.
95	46.015	92.49	547.	1674.	1866.
96	46.515	92.49	547.	1676.	1867.
97	47.015	92.49	547.	1678.	1867.
98	47.515	92.50	547.	1679.	1867.
99	48.015	92.50	547.	1682.	1867.
100	48.515	92.53	547.	1683.	1867.
101	49.015	92.54	547.	1685.	1868.
102	49.515	92.55	547.	1687.	1872.
103	50.015	92.56	547.	1689.	1875.
104	50.515	92.57	547.	1690.	1875.
105	51.015	92.60	547.	1693.	1875.
106	51.515	92.60	547.	1694.	1875.
107	52.015	92.63	547.	1696.	1876.
108	52.515	92.64	547.	1697.	1879.
109	53.015	92.66	547.	1699.	1879.
110	53.515	92.68	547.	1701.	1879.
111	54.015	92.68	547.	1702.	1876.
112	54.515	92.69	547.	1704.	1875.
113	55.015	92.70	547.	1704.	1875.
114	55.515	92.72	547.	1706.	1873.
115	56.015	92.73	547.	1707.	1872.
116	56.515	92.72	547.	1708.	1871.
117	57.015	92.73	547.	1709.	1871.
118	57.515	92.72	547.	1710.	1870.
119	58.015	92.72	547.	1711.	1868.
120	58.515	92.71	547.	1712.	1868.
121	59.015	92.70	547.	1712.	1869.
122	59.515	92.70	547.	1713.	1870.

ORIGINAL PAGE IS OF POOR QUALITY

NATIONAL AERONAUTICS AND SPACE ADMINISTRATION AMES RESEARCH CENTER MOFFETT FIELD CALIF. *** PRELIMINARY DATA ***
3.5 FT HYPERSONIC WIND TUNNEL TEST 227
CONSTANT SET 100 * GAS-TEMP-PROBE MACH NO.=7.35 WEDGE ANG=0 PROBE ANG=0 RUN 3/8

FRAME NO.	PT (PSIA)	PT CELL 2 (PSIA)	PCH /P	TT (DEGR)	PROBE / TOTAL TEMPERATURE RATIO PROB1	PROB2
83	206.5	206.8		1919.	.8552	.9692
84	206.3	206.8		1920.	.8565	.9702
85	206.2	206.7		1920.	.8583	.9703
86	206.2	206.5		1920.	.8592	.9705
87	206.2	206.5		1921.	.8615	.9709
88	206.2	206.5		1921.	.8622	.9717
89	206.2	206.4		1922.	.8635	.9712
90	206.2	206.5		1922.	.8649	.9704
91	206.2	206.5		1922.	.8659	.9703
92	206.2	206.5		1922.	.8674	.9705
93	206.2	206.5		1921.	.8687	.9712
94	206.2	206.7		1922.	.8696	.9713
95	206.2	206.7		1922.	.8708	.9706
96	206.2	206.7		1923.	.8715	.9713
97	206.2	206.6		1923.	.8727	.9710
98	206.2	206.6		1923.	.8735	.9711
99	206.2	206.7		1924.	.8742	.9706
100	206.2	206.5		1924.	.8748	.9706
101	206.2	206.4		1925.	.8757	.9707
102	206.2	206.3		1924.	.8765	.9728
103	206.2	206.3		1925.	.8777	.9741
104	206.1	206.4		1926.	.8778	.9738
105	206.1	206.4		1926.	.8793	.9735
106	206.2	206.6		1926.	.8798	.9736
107	206.2	206.5		1926.	.8806	.9742
108	206.2	206.6		1928.	.8803	.9745
109	206.2	206.4		1929.	.8810	.9741
110	206.2	206.6		1928.	.8821	.9744
111	206.2	206.6		1928.	.8830	.9729
112	206.2	206.6		1928.	.8836	.9725
113	206.2	206.7		1928.	.8839	.9721
114	206.2	206.8		1929.	.8845	.9710
115	206.2	206.7		1928.	.8854	.9709
116	206.2	206.8		1928.	.8860	.9706
117	206.2	206.7		1928.	.8865	.9703
118	206.2	206.7		1928.	.8871	.9701
119	206.2	206.7		1928.	.8876	.9693
120	206.2	206.4		1928.	.8880	.9688
121	206.2	206.5		1928.	.8880	.9696
122	206.2	206.4		1928.	.8885	.9702

NATIONAL AERONAUTICS AND SPACE ADMINISTRATION AMES RESEARCH CENTER MOFFETT FIELD CALIF. *** PRELIMINARY DATA ***

3.5 FT HYPERSONIC WIND TUNNEL TEST 227

CONSTANT SET 100 * GAS=TEMP-PROBE MACH NO.=7.35 WEDGE ANG=0 PROBE ANG=0 RUN 3/10

FRAME NO.	TIME (SEC)	STRUT IN-POS	TTR (R)	TEMPERATURE IN DEGREES RANKINE TC1	TC2
123	60.015	92.68	547.	1714.	1872.
124	60.515	92.68	547.	1715.	1875.
125	61.015	92.66	547.	1716.	1876.
126	61.515	92.65	547.	1716.	1876.
127	62.015	92.63	547.	1717.	1878.
128	62.515	92.63	547.	1718.	1881.
129	63.015	92.61	547.	1719.	1881.
130	63.515	92.61	547.	1720.	1880.
131	64.015	92.60	547.	1721.	1881.
132	64.515	92.61	547.	1722.	1882.
133	65.015	92.61	547.	1723.	1881.
134	65.515	92.61	547.	1723.	1881.
135	66.015	92.63	547.	1724.	1882.
136	66.515	92.64	547.	1725.	1882.
137	67.015	48.81	547.	1726.	1883.
138	67.515	5.07	547.	1725.	1876.
139	68.015	5.07	547.	1723.	1866.
140	68.515	5.07	547.	1720.	1854.

ORIGINAL PAGE IS OF POOR QUALITY

NATIONAL AERONAUTICS AND SPACE ADMINISTRATION AMES RESEARCH CENTER MOFFETT FIELD CALIF. *** PRELIMINARY DATA ***

3.5 FT HYPERSONIC WIND TUNNEL TEST 227

CONSTANT SET- 100 * GAS-TEMP-PROBE MACH NO.=7.35 WEDGE ANG=0 PROBE ANG=0 RUN 3/11

FRAME NO.	PT (PSIA)	PT CELL 2 (PSIA)	PCH /P	TT (DEGR)	PROBE / TOTAL TEMPERATURE RATIO PROB1	PROB2
123	206.2	206.6		1928.	.8890	.9706
124	206.2	206.6		1929.	.8893	.9722
125	206.2	206.5		1930.	.8891	.9721
126	206.3	206.5		1931.	.8889	.9716
127	206.2	206.7		1931.	.8894	.9729
128	206.2	206.6		1931.	.8899	.9739
129	206.2	206.7		1931.	.8903	.9739
130	206.2	206.7		1931.	.8903	.9734
131	206.3	206.8		1932.	.8910	.9739
132	206.2	206.7		1933.	.8908	.9734
133	206.2	206.4		1933.	.8912	.9730
134	206.2	206.7		1934.	.8910	.9728
135	206.2	206.6		1934.	.8913	.9732
136	206.2	206.6		1934.	.8923	.9732
137	206.2	206.4		1933.	.8929	.9741
138	206.1	206.5		1933.	.8923	.9704
139	206.2	206.5		1933.	.8913	.9635
140	206.2	206.7		1933.	.8899	.9591
				A * V * E * R * A * G * E	V * A * L * U * E * S	
	206.2	206.5	0.00	0.00 1911.	.720	.900

RADIUS(IN) 12. 9. 6. 3. 0.

AVERAGE TEMPERATURE IN 12 IN.DIA., 18 IN.DIA., 24 IN.DIA., 30 IN.DIA., 36 IN.DIA. CORE.

0.000 0.000 .972 .931 .931

NATIONAL AERONAUTICS AND SPACE ADMINISTRATION AMES RESEARCH CENTER MOFFETT FIELD CALIF. *** PRELIMINARY DATA ***

3.5 FT HYPERSONIC WIND TUNNEL

CONSTANT SET 1EC * GAS-TEMP-PROBE MACH NO.=7.35 WEDGE ANG=0 PROBE ANG=0

TEST 627
RUN 4/1

FRAME NO.	TIME (SEC)	STRUT IN POS	TTR (R)	TEMPERATURE IN DEGREES RANKINE TC1	TC2
3	.014	5.07	548.	551.	555.
4	.515	5.06	548.	551.	555.
5	1.015	5.07	548.	551.	556.
6	1.515	5.08	548.	551.	556.
7	2.015	5.07	548.	551.	556.
8	2.515	48.71	548.	551.	556.
9	3.015	48.71	548.	569.	929.
10	3.515	92.50	547.	614.	1334.
11	4.015	92.50	547.	667.	1583.
12	4.515	92.49	547.	722.	1689.
13	5.015	92.50	547.	785.	1769.
14	5.515	92.50	547.	851.	1827.
15	6.015	92.50	547.	916.	1866.
16	6.515	92.49	547.	983.	1894.
17	7.015	92.49	547.	1048.	1916.
18	7.515	92.49	547.	1111.	1935.
19	8.015	92.49	547.	1172.	1950.
20	8.515	92.49	547.	1230.	1963.
21	9.015	92.50	547.	1284.	1969.
22	9.515	92.50	547.	1335.	1976.
23	10.015	92.50	547.	1382.	1980.
24	10.515	92.49	547.	1424.	1982.
25	11.015	92.50	547.	1465.	1985.
26	11.515	92.50	547.	1501.	1988.
27	12.015	92.50	547.	1534.	1987.
28	12.515	92.51	547.	1565.	1989.
29	13.015	92.53	547.	1592.	1993.
30	13.515	92.53	547.	1617.	1994.
31	14.015	92.54	547.	1639.	1995.
32	14.515	92.56	547.	1658.	1991.
33	15.015	92.58	547.	1675.	1987.
34	15.515	92.60	547.	1691.	1994.
35	16.015	92.61	547.	1705.	1995.
36	16.515	92.63	547.	1719.	1996.
37	17.015	92.64	547.	1731.	1998.
38	17.515	92.64	547.	1742.	1992.
39	18.015	92.66	547.	1750.	1986.
40	18.515	92.67	547.	1759.	1984.
41	19.015	92.68	548.	1767.	1989.
42	19.515	92.68	547.	1774.	1989.

NATIONAL AERONAUTICS AND SPACE ADMINISTRATION AMES RESEARCH CENTER MOFFETT FIELD CALIF. *** PRELIMINARY DATA ***

3.5 FT HYPERSONIC WIND TUNNEL

CONSTANT SET IC= * GAS-TEMP-PROBE MACH NO.=7.35 #EDGE ANG=0 PROBE ANG=0

TEST 227
RUN 4/2

FRAME NO.	PT (PSIA)	PT CELL 2 (PSIA)	PCH/P	TT (DEGR)	PROBE / TOTAL TEMPERATURE RATIO PROB1	PROB2
3	996.9	1003.6		2063.	.2671	.2691
4	996.9	1003.4		2061.	.2674	.2695
5	996.9	1003.4		2058.	.2677	.2699
6	996.7	1003.4		2057.	.2679	.2702
7	996.2	1002.9		2055.	.2681	.2706
8	996.2	1002.7		2053.	.2684	.2708
9	996.2	1002.5		2052.	.2771	.4528
10	995.9	1002.3		2051.	.2994	.6804
11	995.5	1001.8		2050.	.3256	.7731
12	995.6	1001.5		2048.	.3526	.8246
13	995.5	1001.2		2047.	.3833	.8640
14	995.3	1001.5		2046.	.4159	.8933
15	995.2	1001.2		2045.	.4481	.9124
16	995.3	1001.2		2044.	.4807	.9266
17	995.3	1001.2		2044.	.5129	.9375
18	994.9	1000.8		2043.	.5439	.9472
19	994.5	1000.6		2043.	.5739	.9547
20	994.7	1000.6		2044.	.6019	.9604
21	994.5	1000.6		2044.	.6282	.9632
22	994.2	1000.6		2045.	.6529	.9664
23	994.0	1000.6		2045.	.6756	.9681
24	994.0	1000.6		2044.	.6968	.9694
25	994.7	1000.6		2043.	.7170	.9717
26	994.8	1000.6		2042.	.7351	.9737
27	994.8	1000.8		2041.	.7517	.9734
28	994.9	1000.8		2042.	.7662	.9740
29	994.9	1001.2		2042.	.7796	.9758
30	994.9	1000.8		2042.	.7917	.9765
31	995.2	1001.0		2042.	.8027	.9771
32	995.0	1001.2		2041.	.8124	.9754
33	994.8	1000.8		2040.	.8210	.9739
34	994.6	1000.8		2041.	.8238	.9772
35	994.1	1000.6		2041.	.8354	.9773
36	993.7	1000.6		2041.	.8422	.9731
37	994.0	1000.5		2041.	.8482	.9739
38	993.7	1000.6		2041.	.8536	.9761
39	993.4	1000.6		2040.	.8578	.9735
40	993.4	1000.5		2040.	.8621	.9725
41	993.7	1000.6		2040.	.8660	.9748
42	994.0	1000.6		2040.	.8694	.9746

ORIGINAL PAGE IS OF POOR QUALITY

44

NATIONAL AERONAUTICS AND SPACE ADMINISTRATION AMES RESEARCH CENTER MOFFETT FIELD CALIF. *** PRELIMINARY DATA ***

3.5 FT HYPERSONIC WIND TUNNEL TEST 227

CONSTANT SET 200 * GAS-TEMP-PROBE MACH NO.=7.35 WEDGE ANG=0 PROBE ANG=0 RUN 4/4

FRAME NO.	TIME (SEC)	STRUT IN POS	TTR (R)	TEMPERATURE IN DEGREES RANKINE TC1	TC2
43	20.015	92.68	548.	1780.	1987.
44	20.515	92.67	547.	1786.	1993.
45	21.015	92.67	548.	1792.	1994.
46	21.515	92.66	548.	1798.	1993.
47	22.015	92.67	548.	1803.	1993.
48	22.515	92.66	548.	1809.	1994.
49	23.015	92.65	548.	1813.	1996.
50	23.515	92.65	548.	1817.	1996.
51	24.015	92.63	548.	1822.	1999.
52	24.515	92.64	548.	1826.	1996.
53	25.015	92.62	548.	1829.	1999.
54	25.515	92.62	548.	1833.	1997.
55	26.015	92.61	548.	1836.	1996.
56	26.515	92.60	548.	1839.	1993.
57	27.015	92.58	548.	1842.	1992.
58	27.515	92.58	548.	1844.	1993.
59	28.015	92.57	548.	1847.	1996.
60	28.515	92.58	548.	1849.	1996.
61	29.015	92.58	548.	1852.	1996.
62	29.515	92.58	548.	1854.	1993.
63	30.015	92.59	548.	1856.	1993.
64	30.515	92.58	548.	1858.	1994.
65	31.015	92.60	548.	1860.	1994.
66	31.515	92.61	548.	1862.	1997.
67	32.015	92.62	548.	1865.	2002.
68	32.515	92.64	548.	1867.	2003.
69	33.015	92.65	548.	1869.	2003.
70	33.515	92.67	548.	1872.	2000.
71	34.015	92.70	548.	1873.	1995.
72	34.515	92.74	548.	1875.	1991.
73	35.015	92.77	548.	1876.	1990.
74	35.515	92.79	548.	1877.	1996.
75	36.015	92.80	548.	1879.	1993.
76	36.515	92.81	548.	1880.	1992.
77	37.015	92.83	548.	1882.	1989.
78	37.515	92.84	548.	1882.	1996.
79	38.015	92.83	548.	1883.	1996.
80	38.515	92.82	548.	1884.	1995.
81	39.015	92.79	548.	1886.	1985.
82	39.515	92.78	548.	1887.	1973.

ORIGINAL PAGE IS OF POOR QUALITY

NATIONAL AERONAUTICS AND SPACE ADMINISTRATION AMES RESEARCH CENTER MOFFETT FIELD CALIF. *** PRELIMINARY DATA ***

3.5 FT. HYPERSONIC WIND TUNNEL

CONSTANT SET 100 * GAS-TEMP-PRIME MACH NO.=7.35 WEDGE ANG.= PROBE ANG.=

TEST 227
RUN 4/5

FRAME NO.	PT (PSIA)	PT CELL 2 (PSIA)	PCH TT /P (DEGR)	PROBE / TOTAL TEMPERATURE RATIO PROB1	PROB2
43	993.8	1000.6	2041.	.8709	.9737
44	994.1	1000.6	2041.	.8754	.9754
45	994.1	1000.6	2041.	.8782	.9771
46	993.7	1000.5	2040.	.8812	.9791
47	994.1	1000.6	2040.	.8840	.9734
48	994.1	1000.6	2041.	.8862	.9775
49	994.4	1000.6	2040.	.8887	.9733
50	994.1	1000.6	2039.	.8910	.9788
51	994.1	1000.6	2039.	.8935	.9807
52	993.7	1000.6	2038.	.8936	.9791
53	993.4	1000.6	2037.	.8980	.9811
54	993.4	1000.5	2037.	.8995	.9803
55	993.4	1000.4	2038.	.9009	.9734
56	993.4	1000.5	2038.	.9022	.9781
57	993.9	1000.6	2038.	.9035	.9771
58	994.4	1000.6	2039.	.9047	.9774
59	993.4	1000.6	2039.	.9059	.9731
60	994.0	1000.6	2039.	.9071	.9791
61	994.1	1000.6	2039.	.9083	.9787
62	994.6	1000.6	2039.	.9095	.9779
63	993.4	1000.6	2038.	.9109	.9780
64	993.4	1000.5	2038.	.9117	.9784
65	993.9	1000.6	2038.	.9123	.9777
66	993.4	1000.5	2039.	.9132	.9793
67	994.1	1000.6	2039.	.9144	.9817
68	993.7	1000.6	2039.	.9157	.9825
69	993.8	1000.5	2039.	.9167	.9826
70	993.4	1000.6	2039.	.9184	.9814
71	993.7	1000.6	2039.	.9201	.9803
72	993.4	1000.6	2038.	.9217	.9789
73	994.1	1000.6	2036.	.9228	.9793
74	993.7	1000.5	2034.	.9229	.9826
75	993.7	1000.6	2033.	.9240	.9803
76	993.7	1000.6	2033.	.9244	.9797
77	993.8	1000.6	2033.	.9249	.9792
78	994.1	1000.6	2033.	.9257	.9818
79	993.7	1000.6	2033.	.9257	.9810
80	993.4	1000.6	2033.	.9260	.9802
81	993.4	1000.6	2034.	.9268	.9758
82			2035.	.9232	.9730
			2034.		
			2033.		

NATIONAL AERONAUTICS AND SPACE ADMINISTRATION AMES RESEARCH CENTER MOFFETT FIELD CALIF. *** PRELIMINARY DATA ***
3.5 FT HYPERSONIC WIND TUNNEL
CONSTANT SET IGC * GAS-TEMP-PROBE MACH NO.=7.35 WEDGE ANG=0 PROBE ANG=0

TEST 227
RUN 4/7

FRAME NO.	TIME (SEC)	STRUT IN POS	TTR (R)	TEMPERATURE IN DEGREES RANKINE TC1	TC2
83	40.015	92.74	548.	1889.	1982.
84	40.515	92.71	548.	1891.	1983.
85	41.015	92.69	548.	1894.	1981.
86	41.515	92.65	548.	1895.	1981.
87	42.015	92.63	548.	1898.	1992.
88	42.515	92.58	548.	1901.	1993.
89	43.015	92.58	548.	1904.	1995.
90	43.515	92.54	548.	1906.	1992.
91	44.015	92.52	548.	1909.	1994.
92	44.515	92.50	548.	1911.	1993.
93	45.015	92.48	548.	1913.	1994.
94	45.515	92.46	548.	1914.	1995.
95	46.015	92.44	549.	1917.	1992.
96	46.515	92.45	549.	1918.	1989.
97	47.015	92.44	549.	1919.	1986.
98	47.515	92.44	549.	1920.	1985.
99	48.015	92.43	549.	1921.	1973.
100	48.515	92.44	549.	1921.	1979.
101	49.015	92.44	549.	1921.	1980.
102	49.515	92.44	549.	1921.	1982.
103	50.015	92.44	549.	1922.	1984.
104	50.515	92.44	549.	1922.	1984.
105	51.015	92.45	549.	1923.	1982.
106	51.515	92.46	549.	1924.	1982.
107	52.015	92.47	549.	1924.	1982.
108	52.515	92.49	549.	1925.	1983.
109	53.015	92.51	549.	1925.	1979.
110	53.515	92.52	549.	1925.	1985.
111	54.015	92.53	549.	1926.	1985.
112	54.515	92.54	549.	1927.	1984.
113	55.015	92.56	549.	1927.	1982.
114	55.515	92.58	549.	1927.	1981.
115	56.015	92.61	549.	1927.	1983.
116	56.515	92.61	549.	1927.	1983.
117	57.015	92.64	549.	1927.	1977.
118	57.515	92.64	549.	1927.	1979.
119	58.015	92.66	549.	1928.	1982.
120	58.515	92.67	550.	1928.	1983.
121	59.015	92.67	550.	1928.	1984.
122	59.515	92.67	550.	1929.	1990.

ORIGINAL PAGE IS OF POOR QUALITY

NATIONAL AERONAUTICS AND SPACE ADMINISTRATION AMES RESEARCH CENTER MOFFETT FIELD CALIF. *** PRELIMINARY DATA ***

3.5 FT HYPERSONIC WIND TUNNEL

CONSTANT SET 100 * GAS-TEMP-PROBE MACH NO.=7.35 *EDGE ANG=0 PROBE ANG=0

TEST 227
RUN 4/8

FRAME NO.	PT (PSIA)	PT CELL 2 (PSIA)	PCH /P	TT (DEGR)	PROBE / TOTAL TEMPERATURE RATIO PROB1	PROB2
83	993.4	1000.6		2033.	.9294	.9747
84	993.4	1000.4		2033.	.9303	.9758
85	993.2	1000.1		2033.	.9313	.9743
86	993.4	1000.3		2032.	.9325	.9747
87	993.4	1000.6		2032.	.9342	.9832
88	994.5	1000.6		2033.	.9354	.9831
89	994.9	1001.0		2033.	.9368	.9820
90	994.9	1001.2		2033.	.9374	.9793
91	994.9	1001.2		2034.	.9383	.9800
92	994.8	1001.2		2036.	.9384	.9798
93	994.6	1000.8		2036.	.9395	.9733
94	993.4	1000.6		2036.	.9401	.9797
95	993.4	1000.5		2037.	.9411	.9732
96	993.4	1000.5		2035.	.9424	.9774
97	993.4	1000.6		2032.	.9437	.9766
98	993.4	1000.6		2034.	.9442	.9762
99	993.4	1000.6		2033.	.9445	.9731
100	993.4	1000.5		2033.	.9447	.9732
101	993.4	1000.6		2033.	.9450	.9740
102	993.4	1000.6		2032.	.9454	.9751
103	993.4	1000.6		2033.	.9455	.9761
104	993.9	1000.6		2032.	.9459	.9754
105	993.8	1000.6		2033.	.9462	.9749
106	993.4	1000.5		2033.	.9463	.9748
107	994.0	1000.6		2032.	.9471	.9754
108	993.8	1000.6		2031.	.9474	.9745
109	993.9	1000.6		2030.	.9482	.9746
110	993.4	1000.6		2029.	.9485	.9732
111	993.4	1000.5		2029.	.9490	.9734
112	993.4	1000.6		2029.	.9496	.9730
113	993.4	1000.5		2029.	.9494	.9766
114	993.4	1000.4		2031.	.9489	.9754
115	993.7	1000.6		2033.	.9482	.9753
116	993.4	1000.6		2033.	.9482	.9742
117	993.4	1000.6		2032.	.9482	.9729
118	993.4	1000.6		2033.	.9481	.9736
119	993.9	1000.6		2032.	.9487	.9754
120	993.4	1000.6		2032.	.9487	.9758
121	993.8	1000.6		2032.	.9487	.9764
122	993.4	1000.5		2032.	.9494	.9736

NATIONAL AERONAUTICS AND SPACE ADMINISTRATION AMES RESEARCH CENTER MOFFETT FIELD CALIF. *** PRELIMINARY DATA ***

3.5 FT HYPERSONIC WIND TUNNEL

CONSTANT SET 100 * GAS-TEMP-PROBE MACH NO.=7.35 WEDGE ANG=0 PROBE ANG=0

TEST 227
RUN 6/11

FRAME NO.	TIME (SEC)	STRUT IN POS	TTR (R)	TC1	TC2
123	60.015	92.66	550.	1933.	1991.
124	60.515	92.67	550.	1930.	1992.
125	61.015	92.65	550.	1931.	1991.
126	61.515	92.66	550.	1933.	1994.
127	62.015	92.65	550.	1933.	1993.
128	62.515	92.64	550.	1934.	1996.
129	63.015	92.62	550.	1934.	1996.
130	62.515	92.62	550.	1936.	1995.
131	64.015	92.63	550.	1937.	1997.
132	64.515	92.62	550.	1937.	1998.
133	65.015	92.61	550.	1938.	1994.
134	65.515	92.59	550.	1938.	1986.
135	66.015	92.59	550.	1938.	1982.
136	66.515	92.60	550.	1938.	1983.
137	67.015	48.76	550.	1938.	1984.
138	67.515	5.09	550.	1939.	1976.
139	68.015	5.08	550.	1938.	1968.
140	68.515	5.09	550.	1938.	1958.
141	69.015	5.08	550.	1937.	1946.

TEMPERATURE IN DEGREES RANKINE

ORIGINAL PAGE IS OF POOR QUALITY

NATIONAL AERONAUTICS AND SPACE ADMINISTRATION AMES RESEARCH CENTER MOFFETT FIELD CALIF. *** PRELIMINARY DATA ***

3.5-FT HYPERSONIC WIND TUNNEL TEST 227

CONSTANT SET 100 * GAS-TEMP-PROBE MACH NO.=7.35 WEDGE ANG=0 PROBE ANG=0 RUN 4/11

FRAME NO.	PT (PSIA)	PT CELL 2 (PSIA)	PCH/P	TT (DEGR)	PROBE / TOTAL TEMPERATURE RATIO PROB1	PROB2
123	993.4	1000.6		2032.	.9494	.9796
124	993.4	1000.6		2032.	.9501	.9793
125	993.4	1000.6		2030.	.9512	.9805
126	993.4	1000.6		2030.	.9521	.9821
127	994.0	1000.6		2029.	.9530	.9827
128	993.8	1000.6		2029.	.9534	.9837
129	993.4	1000.6		2029.	.9535	.9840
130	993.4	1000.6		2028.	.9548	.9839
131	993.4	1000.5		2028.	.9553	.9848
132	993.6	1000.6		2029.	.9549	.9845
133	993.4	1000.6		2030.	.9543	.9822
134	993.4	1000.6		2028.	.9555	.9791
135	993.4	1000.6		2026.	.9565	.9730
136	993.7	1000.5		2026.	.9568	.9814
137	993.8	1000.6		2025.	.9570	.9797
138	993.4	1000.6		2025.	.9572	.9756
139	993.7	1000.6		2025.	.9572	.9716
140	993.4	1000.6		2024.	.9576	.9674
141	994.0	1000.6		2023.	.9578	.9621
	994.1	1000.3	0.00	0.00 2037.	.837	.935

A * V * E * R * A * G * E V * A * L * U * E * S

RADIUS(IN) 12. 9. 6. 3. 0.

AVERAGE TEMPERATURE IN 12 IN.DIA., 18 IN.DIA., 24 IN.DIA., 30 IN.DIA., 36 IN.DIA. CORE.

0.000 0.000 .979 .967 .967

50A

NATIONAL AERONAUTICS AND SPACE ADMINISTRATION AMES RESEARCH CENTER MOFFETT FIELD CALIF. *** PRELIMINARY DATA ***

3.5 FT HYPERSONIC WIND TUNNEL TEST 227

CONSTANT SET 100 * GAS-TEMP-PRTHE MACH NO.=7.35 WEDGE ANG=0 PROBE ANG=0 RUN 5

FRAME NO.	TIME (SEC)	STRUT IN POS	TTP (R)	TEMPERATURE IN DEGREES RANKINE TC1	TC2
3	.015	4.95	543.	543.	549.
4	.515	4.95	543.	543.	545.
5	1.015	4.95	543.	543.	545.
6	1.515	4.95	543.	543.	545.
7	2.015	4.95	543.	543.	545.
8	2.515	47.53	543.	543.	545.
9	3.015	47.57	543.	544.	567.
10	3.515	90.33	542.	563.	919.
11	4.015	90.38	543.	596.	1147.
12	4.515	90.42	543.	635.	1311.
13	5.015	90.46	543.	679.	1435.
14	5.515	90.47	543.	726.	1532.
15	6.015	90.51	543.	774.	1605.
16	6.515	90.52	542.	824.	1661.
17	7.015	90.52	543.	875.	1705.
18	7.515	90.51	543.	925.	1739.
19	8.015	90.51	543.	975.	1765.
20	8.515	90.48	543.	1024.	1783.
21	9.015	90.43	543.	1071.	1811.
22	9.515	90.40	543.	1117.	1824.
23	10.015	90.38	543.	1161.	1833.
24	10.515	90.32	543.	1202.	1842.
25	11.015	90.28	543.	1242.	1850.
26	11.515	90.24	543.	1278.	1855.
27	12.015	90.24	543.	1313.	1857.
28	12.515	90.22	543.	1345.	1857.
29	13.015	90.20	543.	1375.	1858.
30	13.515	90.21	543.	1403.	1861.
31	14.015	90.20	543.	1429.	1858.
32	14.515	90.21	543.	1453.	1861.
33	15.015	90.25	543.	1475.	1862.
34	15.515	90.26	543.	1496.	1863.
35	16.015	90.31	543.	1514.	1862.
36	16.515	90.31	543.	1531.	1864.
37	17.015	90.34	543.	1547.	1862.
38	17.515	90.34	543.	1561.	1862.
39	18.015	90.35	543.	1574.	1865.
40	18.515	90.34	543.	1587.	1868.
41	19.015	90.34	543.	1599.	1868.
42	19.515	90.32	543.	1610.	1868.

NATIONAL AERONAUTICS AND SPACE ADMINISTRATION AMES RESEARCH CENTER MOFFETT FIELD CALIF. *** PRELIMINARY DATA ***

3.5 FT HYPERSONIC WIND TUNNEL

CONSTANT SET 302 * GAS-TEMP-PROBE MACH NO.47.35 WEDGE ANG=0 PROBE ANG=0

TEST 227
RUN 5/2

FRAME NO.	PT (PSIA)	PT CELL 2 (PSIA)	PCH /P	TT (DEGR)	PROBE / TOTAL TEMPERATURE RATIO PR031	PR032
3	998.1	1002.5		1971.	.2757	.2767
4	996.5	1001.9		1966.	.2763	.2772
5	996.3	1001.4		1962.	.2770	.2778
6	995.8	1000.8		1959.	.2772	.2783
7	995.8	1000.2		1957.	.2776	.2788
8	995.6	1000.2		1954.	.2780	.2791
9	995.6	1000.0		1953.	.2785	.2802
10	995.6	999.7		1952.	.2883	.4711
11	996.0	1001.0		1951.	.3052	.5880
12	997.9	1002.5		1949.	.3256	.6723
13	999.7	1004.7		1949.	.3436	.7362
14	999.7	1005.1		1949.	.3724	.7861
15	999.7	1004.9		1949.	.3971	.8234
16	999.7	1004.9		1948.	.4231	.8527
17	999.2	1004.6		1947.	.4495	.8757
18	999.2	1004.4		1946.	.4754	.8934
19	999.0	1004.1		1945.	.5[illegible]5	.9082
20	999.0	1003.4		1943.	.5259	.9198
21	999.0	1003.4		1943.	.5512	.9312
22	999.0	1003.0		1943.	.5749	.9389
23	998.8	1002.8		1942.	.5980	.9443
24	998.4	1002.5		1940.	.6194	.9494
25	998.4	1002.5		1940.	.6399	.9536
26	997.6	1002.5		1940.	.6591	.9566
27	998.1	1002.4		1939.	.6773	.9575
28	998.2	1002.3		1940.	.6933	.9575
29	998.1	1002.5		1939.	.7092	.9585
30	998.2	1002.5		1939.	.7236	.9590
31	998.4	1002.5		1940.	.7366	.9577
32	998.6	1002.5		1939.	.7492	.9595
33	998.3	1002.5		1940.	.7602	.9594
34	998.1	1002.5		1940.	.7708	.9603
35	998.2	1002.5		1941.	.7803	.9592
36	998.0	1002.4		1940.	.7892	.9611
37	997.9	1002.3		1940.	.7973	.9597
38	998.1	1002.5		1940.	.8045	.9594
39	998.1	1002.5		1940.	.8115	.9615
40	998.2	1002.5		1939.	.8183	.9629
41	998.2	1002.5		1940.	.8242	.9630
42	998.2	1002.5		1938.	.8306	.9637

ORIGINAL PAGE IS OF POOR QUALITY

NATIONAL AERONAUTICS AND SPACE ADMINISTRATION AMES RESEARCH CENTER MOFFETT FIELD CALIF. *** PRELIMINARY DATA ***

3.5 FT HYPERSONIC WIND TUNNEL

CONSTANT SET 100 * GAS-TEMP-PROBE MACH NO.=7.35 WEDGE ANG=0 PROBE ANG=0

TEST 227
RUN 5/4

FRAME NO.	TIME (SEC)	STRUT IN POS	TTR (R)	TEMPERATURE IN DEGREES RANKINE TC1	TC2
43	20.015	90.30	543.	1620.	1869.
44	20.515	90.31	543.	1628.	1871.
45	21.015	90.30	543.	1638.	1871.
46	21.515	90.29	543.	1646.	1868.
47	22.015	90.28	543.	1654.	1868.
48	22.515	90.30	543.	1661.	1871.
49	23.015	90.31	543.	1668.	1868.
50	23.515	90.32	543.	1673.	1868.
51	24.015	90.34	543.	1679.	1871.
52	24.515	90.35	543.	1685.	1875.
53	25.015	90.38	543.	1691.	1879.
54	25.515	90.45	543.	1696.	1880.
55	26.015	90.46	543.	1701.	1875.
56	26.515	90.48	543.	1705.	1872.
57	27.015	90.51	543.	1709.	1867.
58	27.515	90.50	543.	1713.	1868.
59	28.015	90.48	543.	1717.	1872.
60	28.515	90.49	543.	1721.	1875.
61	29.015	90.42	543.	1724.	1869.
62	29.515	90.38	543.	1728.	1865.
63	30.015	90.34	543.	1731.	1862.
64	30.515	90.29	543.	1732.	1858.
65	31.015	90.24	543.	1735.	1855.
66	31.515	90.21	543.	1736.	1858.
67	32.015	90.18	543.	1738.	1861.
68	32.515	90.17	543.	1740.	1862.
69	33.015	90.17	543.	1742.	1864.
70	33.515	90.18	543.	1743.	1861.
71	34.015	90.19	543.	1746.	1861.
72	34.515	90.20	543.	1747.	1867.
73	35.015	90.24	543.	1750.	1868.
74	35.515	90.29	543.	1751.	1864.
75	36.015	90.30	543.	1753.	1861.
76	36.515	90.32	543.	1754.	1864.
77	37.015	90.34	543.	1757.	1868.
78	37.515	90.33	543.	1758.	1867.
79	38.015	90.33	543.	1760.	1867.
80	38.515	90.34	543.	1761.	1866.
81	39.015	90.32	543.	1762.	1864.
82	39.515	90.30	543.	1764.	1868.

ORIGINAL PAGE IS OF POOR QUALITY

53<

NATIONAL AERONAUTICS AND SPACE ADMINISTRATION AMES RESEARCH CENTER MOFFETT FIELD CALIF. *** PRELIMINARY DATA ***

3.5 FT HYPERSONIC WIND TUNNEL

CONSTANT S-T 100 * GAS-TEMP-PROBE MACH NO.=7.39 WEDGE ANG=0 PROBE ANG=0

TEST 227
RUN 5/5

FRAME NO.	PT (PSIA)	PT CELL 2 (PSIA)	PCH /P	TT (DEGR)	PROBE / TOTAL TEMPERATURE RATIO PR031	PR032
43	998.3	1002.5		1938.	.8357	.9641
44	998.4	1002.5		1939.	.8397	.9650
45	998.2	1002.5		1939.	.8445	.9648
46	998.3	1002.5		1939.	.8487	.9634
47	998.3	1002.5		1939.	.8527	.9632
48	998.3	1002.5		1938.	.8572	.9659
49	998.0	1002.5		1937.	.8608	.9644
50	998.3	1002.5		1937.	.8635	.9644
51	998.2	1002.5		1937.	.8671	.9652
52	998.2	1002.5		1936.	.8703	.9685
53	998.2	1002.5		1937.	.8733	.9702
54	998.2	1002.5		1936.	.8758	.9706
55	998.1	1002.5		1936.	.8787	.9686
56	998.1	1002.5		1936.	.8808	.9671
57	998.2	1002.5		1935.	.8832	.9648
58	998.2	1002.5		1933.	.8863	.9664
59	998.2	1002.5		1932.	.8889	.9690
60	998.1	1002.5		1933.	.8902	.9697
61	998.0	1002.5		1932.	.8924	.9676
62	997.9	1002.4		1930.	.8950	.9669
63	998.2	1002.5		1930.	.8959	.9647
64	998.3	1002.5		1929.	.8979	.9631
65	998.3	1002.5		1929.	.8992	.9620
66	998.2	1002.5		1928.	.9001	.9636
67	998.2	1002.5		1927.	.9022	.9659
68	998.1	1002.5		1927.	.9029	.9663
69	998.0	1002.5		1927.	.9041	.9672
70	997.9	1002.5		1928.	.9042	.9654
71	997.9	1002.3		1927.	.9058	.9656
72	997.8	1002.3		1928.	.9064	.9683
73	997.1	1002.0		1927.	.9078	.9692
74	996.8	1001.9		1926.	.9081	.9670
75	996.3	1001.8		1927.	.9095	.9657
76	996.6	1001.8		1927.	.9103	.9675
77	997.3	1001.9		1928.	.9110	.9686
78	997.8	1002.3		1930.	.9109	.9678
79	998.0	1002.5		1930.	.9116	.9671
80	998.1	1002.5		1931.	.9120	.9663
81	998.0	1002.5		1931.	.9126	.9655
82	998.2	1002.5		1930.	.9139	.9676

54A

NATIONAL AERONAUTICS AND SPACE ADMINISTRATION AMES RESEARCH CENTER MOFFETT FIELD CALIF. *** PRELIMINARY DATA ***

3.5 FT HYPERSONIC WIND TUNNEL

CONSTANT SET TCC # GAS-TEMP-PROBE MACH NO.=2.55 WEDGE ANG=0 PROBE ANG=0

TEST 227
RUN 5/

FRAME NO.	TIME (SEC)	STRUT IN POS	TTP (R)	TEMPERATURE IN DEGREES RANKINE TC1	TC2
83	40.015	90.28	543.	1766.	1872.
84	40.515	90.29	543.	1768.	1871.
85	41.015	90.28	543.	1759.	1873.
86	41.515	90.30	543.	1771.	1871.
87	42.015	90.32	543.	1772.	1869.
88	42.515	90.30	543.	1773.	1870.
89	43.015	90.35	543.	1775.	1873.
90	43.515	90.38	543.	1776.	1875.
91	44.015	90.41	543.	1777.	1873.
92	44.515	90.42	544.	1779.	1873.
93	45.015	90.47	544.	1780.	1869.
94	45.515	90.49	544.	1781.	1865.
95	46.015	90.52	544.	1781.	1865.
96	46.515	90.53	544.	1782.	1862.
97	47.015	90.51	544.	1782.	1861.
98	47.515	90.50	544.	1783.	1861.
99	48.015	90.46	544.	1783.	1861.
100	48.515	90.44	544.	1783.	1862.
101	49.015	90.42	544.	1783.	1861.
102	49.515	90.35	544.	1783.	1858.
103	50.015	90.33	544.	1783.	1858.
104	50.515	90.30	544.	1784.	1858.
105	51.015	90.25	544.	1783.	1853.
106	51.515	90.24	544.	1783.	1849.
107	52.015	90.22	544.	1783.	1844.
108	52.515	90.21	544.	1782.	1842.
109	53.015	90.19	544.	1781.	1843.
110	53.515	90.20	544.	1780.	1847.
111	54.015	90.20	544.	1781.	1851.
112	54.515	90.21	544.	1781.	1855.
113	55.015	90.21	544.	1781.	1855.
114	55.515	90.23	544.	1781.	1854.
115	56.015	90.24	544.	1781.	1855.
116	56.515	90.25	544.	1781.	1856.
117	57.015	90.29	544.	1781.	1858.
118	57.515	90.30	544.	1783.	1858.
119	58.015	90.33	544.	1783.	1861.
120	58.515	90.34	544.	1784.	1858.
121	59.015	90.33	545.	1784.	1858.
122	59.515	90.34	545.	1784.	1855.

NATIONAL AERONAUTICS AND SPACE ADMINISTRATION AMES RESEARCH CENTER MOFFETT FIELD CALIF. *** PRELIMINARY DATA ***

3.5 FT HYPERSONIC WIND TUNNEL

CONSTANT SET 100 * GAS-TEMP-PROBE MACH NO.=7.35 WEDGE ANG=0 PROBE ANG=0

TEST 227
RUN 5/8

FRAME NO.	PT (PSIA)	PT CELL 2 (PSIA)	PCH /P	TT (DEGR)	PROBE / TOTAL TEMPERATURE RATIO PROB1	PROB2
83	998.3	1002.5		1929.	.9156	.9734
84	998.3	1002.5		1928.	.9166	.9734
85	998.3	1002.5		1929.	.9170	.9739
86	998.6	1002.8		1928.	.9183	.9733
87	998.8	1003.0		1928.	.9191	.9693
88	998.7	1003.0		1928.	.9197	.9731
89	998.3	1002.8		1929.	.9202	.9739
90	998.2	1002.5		1929.	.9206	.9716
91	998.1	1002.5		1929.	.9213	.9739
92	998.0	1002.5		1930.	.9220	.9705
93	997.9	1002.4		1931.	.9218	.9681
94	997.2	1002.1		1931.	.9223	.9668
95	996.8	1002.0		1929.	.9233	.9658
96	996.9	1001.9		1929.	.9241	.9651
97	996.9	1002.0		1928.	.9245	.9651
98	997.8	1002.1		1927.	.9251	.9656
99	997.3	1002.4		1928.	.9253	.9657
100	997.8	1002.2		1928.	.9249	.9659
101	997.4	1002.2		1927.	.9253	.9655
102	997.6	1002.4		1927.	.9254	.9643
103	997.6	1002.1		1926.	.9261	.9648
104	997.9	1002.2		1926.	.9259	.9643
105	997.9	1002.5		1926.	.9250	.9621
106	998.2	1002.5		1926.	.9256	.9595
107	998.3	1002.7		1927.	.9253	.9570
108	998.7	1002.8		1927.	.9245	.9556
109	998.8	1003.0		1926.	.9249	.9573
110	998.8	1003.0		1925.	.9252	.9597
111	998.8	1003.0		1924.	.9253	.9621
112	998.7	1003.0		1924.	.9254	.9641
113	998.6	1002.7		1923.	.9260	.9643
114	998.2	1002.5		1924.	.9257	.9639
115	998.2	1002.5		1922.	.9264	.9652
116	998.1	1002.5		1921.	.9270	.9659
117	997.9	1002.5		1921.	.9273	.9670
118	998.0	1002.4		1922.	.9277	.9672
119	998.0	1002.3		1920.	.9286	.9693
120	997.8	1002.4		1920.	.9291	.9680
121	997.8	1002.3		1920.	.9294	.9677
122	997.9	1002.5		1918.	.9301	.9671

NATIONAL AERONAUTICS AND SPACE ADMINISTRATION AMES RESEARCH CENTER MOFFETT FIELD CALIF. *** PRELIMINARY DATA ***

9.5 FT HYPERSONIC WIND TUNNEL

CONSTANT SET 2LW * GAS-TEMP-PROBE MACH NO.=7.35 WEDGE ANG=0 PROBE ANG=0

TEST 227
RUN 5/1

FRAME NO.	TIME (SEC)	STRUT IN POS	TTR (R)	TEMPERATURE IN DEGREES RANKINE TC1	TC2
123	60.015	90.35	545.	1785.	1852.
124	60.515	90.35	545.	1785.	1853.
125	61.015	90.32	545.	1786.	1856.
126	61.515	90.30	545.	1786.	1855.
127	62.015	90.30	545.	1786.	1853.
128	62.515	90.29	545.	1787.	1855.
129	63.015	90.29	545.	1787.	1856.
130	63.515	90.28	545.	1787.	1854.
131	64.015	90.28	545.	1788.	1855.
132	64.515	90.31	545.	1788.	1856.
133	65.015	90.32	545.	1788.	1862.
134	65.515	90.23	545.	1738.	1860.
135	66.015	90.36	545.	1789.	1859.
136	66.515	90.41	545.	1789.	1855.
137	67.015	90.45	545.	1789.	1852.
138	67.515	90.46	545.	1790.	1854.
139	68.015	90.51	545.	1791.	1854.
140	68.515	90.51	545.	1790.	1849.
141	69.015	90.48	545.	1791.	1848.
142	69.515	90.46	545.	1790.	1850.
143	70.015	90.39	546.	1791.	1855.
144	70.515	90.33	546.	1791.	1858.
145	71.015	90.28	546.	1791.	1859.
146	71.515	90.23	546.	1792.	1857.
147	72.015	90.18	546.	1792.	1853.
148	72.515	90.17	546.	1792.	1854.
149	73.015	90.17	546.	1792.	1853.
150	73.515	90.17	546.	1792.	1853.
151	74.015	90.29	546.	1792.	1852.
152	74.515	90.24	546.	1792.	1853.
153	75.015	90.29	546.	1792.	1851.
154	75.515	90.31	546.	1792.	1849.
155	76.015	90.33	546.	1792.	1851.
156	76.515	90.33	546.	1792.	1854.
157	77.015	90.33	546.	1792.	1853.
158	77.515	47.53	546.	1793.	1853.

52

NATIONAL AERONAUTICS AND SPACE ADMINISTRATION AMES RESEARCH CENTER MOFFETT FIELD CALIF. *** PRELIMINARY DATA ***

3.5 FT HYPERSONIC WIND TUNNEL

CONSTANT SET 100 * GAS-TEMP-PROBE MACH NO.=7.35 WEDGE ANG=0 PROBE ANG=0

TEST 227
RUN 5/11

FRAME NO.	PT (PSIA)	PT CELL 2 (PSIA)	PCH /P	TT (DEGR)	PROBE / TOTAL TEMPERATURE RATIO PROB1	PROB2
123	998.1	1002.5		1917.	.9308	.9652
124	998.1	1002.5		1917.	.9310	.9673
125	997.9	1002.5		1919.	.9307	.9672
126	998.0	1002.5		1918.	.9310	.9678
127	998.3	1002.5		1917.	.9317	.9675
128	998.1	1002.5		1917.	.9319	.9676
129	998.3	1002.5		1917.	.9323	.9677
130	998.3	1002.5		1919.	.9316	.9661
131	998.3	1002.5		1918.	.9321	.9672
132	998.3	1002.5		1917.	.9327	.9682
133	998.6	1002.8		1917.	.9327	.9711
134	998.3	1002.5		1917.	.9327	.9700
135	998.3	1002.5		1917.	.9335	.9700
136	998.2	1002.5		1915.	.9344	.9688
137	997.9	1002.5		1915.	.9346	.9671
138	998.0	1002.5		1916.	.9342	.9677
139	997.8	1002.5		1917.	.9341	.9671
140	998.0	1002.4		1917.	.9337	.9646
141	997.9	1002.4		1917.	.9343	.9642
142	997.6	1002.4		1917.	.9336	.9652
143	997.6	1002.3		1917.	.9339	.9673
144	997.8	1002.3		1917.	.9345	.9697
145	997.6	1002.5		1916.	.9352	.9715
146	997.9	1002.5		1916.	.9354	.9695
147	997.8	1002.4		1916.	.9353	.9672
148	997.8	1002.5		1916.	.9353	.9678
149	998.0	1002.5		1916.	.9352	.9668
150	998.2	1002.5		1916.	.9351	.9659
151	998.0	1002.5		1916.	.9353	.9664
152	998.1	1002.5		1918.	.9346	.9661
153	998.0	1002.5		1917.	.9349	.9643
154	997.9	1002.5		1916.	.9352	.9646
155	997.9	1002.5		1917.	.9348	.9656
156	997.9	1002.5		1917.	.9349	.9672
157	998.0	1002.5		1917.	.9351	.9668
158	998.2	1002.5		1916.	.9357	.9671
A * V * E * R * A * G * E					V * A * L * U * E * S	
	998.0	1002.5	0.00	0.00 1931.	.823	.921

RADIUS(IN) 12. 9. 6. 3. 0.

AVERAGE TEMPERATURE IN 12 IN.DIA., 18 IN.DIA., 24 IN.DIA., 30 IN.DIA., 36 IN.DIA. CORE.

0.000 0.000 .967 .951 .951

NATIONAL AERONAUTICS AND SPACE ADMINISTRATION AMES RESEARCH CENTER MOFFETT FIELD, CALIF. - [illegible]

3.5 FT HYPERSONIC WIND TUNNEL TEST 227

CONSTANT SET 100 # GAS-TEMP-PROBE MACH NO.=7.35 WEDGE ANG.0 PROBE ANG.0 RUN 27

FRAME NO.	TIME (SEC)	STRUT IN POS	TTR (R)	TEMPERATURE IN DEGREES RANKINE TC1	TC2
3	.014	4.94	548.	560.	564.
4	.515	4.94	548.	560.	564.
5	1.015	4.94	548.	560.	564.
6	1.515	4.94	548.	560.	564.
7	2.015	4.94	548.	560.	564.
8	2.515	4.94	548.	560.	564.
9	3.015	47.56	548.	560.	564.
10	3.515	47.55	548.	560.	575.
11	4.015	90.32	548.	561.	656.
12	4.515	90.33	548.	564.	735.
13	5.015	90.33	548.	566.	807.
14	5.515	90.34	548.	569.	873.
15	6.015	90.34	548.	573.	936.
16	6.515	90.36	548.	577.	995.
17	7.015	90.37	548.	584.	1049.
18	7.515	90.38	548.	590.	1101.
19	8.015	90.39	548.	597.	1151.
20	8.515	90.40	548.	605.	1197.
21	9.015	90.43	548.	614.	1243.
22	9.515	90.44	548.	624.	1277.
23	10.015	90.45	548.	635.	1312.
24	10.515	90.47	548.	647.	1342.
25	11.015	90.49	548.	658.	1368.
26	11.515	90.49	548.	672.	1392.
27	12.015	90.51	548.	686.	1415.
28	12.515	90.52	548.	701.	1435.
29	13.015	90.50	548.	717.	1454.
30	13.515	90.51	548.	732.	1471.
31	14.015	90.51	548.	749.	1488.
32	14.515	90.49	548.	766.	1503.
33	15.015	90.49	548.	783.	1517.
34	15.515	90.46	548.	801.	1528.
35	16.015	90.45	548.	819.	1539.
36	16.515	90.43	548.	837.	1549.
37	17.015	90.40	548.	856.	1558.
38	17.515	90.39	548.	875.	1567.
39	18.015	90.36	548.	894.	1575.
40	18.515	90.35	548.	914.	1581.
41	19.015	90.33	548.	933.	1583.
42	19.515	90.29	548.	952.	1595.

ORIGINAL PAGE IS OF POOR QUALITY

NATIONAL AERONAUTICS AND SPACE ADMINISTRATION AMES RESEARCH CENTER MOFFETT FIELD, CALIF. *** PRELIMINARY DATA ***

3.5 FT HYPERSONIC WIND TUNNEL TEST 227

CONSTANT SET 100 * GAS-TEMP-PROBE MACH NO.=7.35 WEDGE ANG=0 PROBE ANG=0 RUN 6/2

FRAME NO.	PT (PSIA)	PT CELL 2 (PSIA)	PCH /P	TT (DEGR)	PROBE / TOTAL TEMPERATURE RATIO PROB1	PROB2
3	204.8	205.1		1796.	.3118	.3143
4	204.8	205.1		1796.	.3119	.3141
5	204.8	205.1		1797.	.3117	.3140
6	204.8	205.1		1798.	.3116	.3140
7	204.8	205.3		1798.	.3116	.3139
8	204.8	205.3		1799.	.3114	.3136
9	204.8	205.3		1801.	.3110	.3131
10	204.8	205.1		1803.	.3106	.3187
11	204.8	205.1		1805.	.3110	.3634
12	204.8	205.1		1807.	.3120	.4067
13	204.8	205.3		1807.	.3132	.4464
14	204.8	205.3		1809.	.3147	.4827
15	204.8	205.3		1809.	.3165	.5175
16	204.8	205.3		1812.	.3185	.5491
17	204.8	205.3		1814.	.3219	.5785
18	204.8	205.3		1815.	.3251	.6069
19	204.7	205.3		1816.	.3288	.6337
20	204.8	205.1		1820.	.3326	.6578
21	204.8	205.1		1822.	.3372	.6806
22	204.8	205.3		1823.	.3425	.7007
23	204.7	205.3		1824.	.3480	.7135
24	204.7	205.1		1826.	.3542	.7347
25	204.6	205.3		1827.	.3605	.7492
26	204.7	205.1		1828.	.3677	.7618
27	204.7	205.1		1829.	.3752	.7733
28	204.6	205.1		1829.	.3831	.7847
29	204.7	205.1		1830.	.3916	.7945
30	204.7	205.1		1830.	.3998	.8037
31	204.6	205.1		1831.	.4090	.8126
32	204.8	205.1		1831.	.4182	.8209
33	204.8	205.1		1831.	.4276	.8283
34	204.8	205.4		1830.	.4375	.8349
35	204.8	205.3		1831.	.4471	.8406
36	204.7	205.4		1831.	.4571	.8463
37	204.7	205.1		1832.	.4673	.8506
38	204.8	205.1		1832.	.4777	.8552
39	204.7	205.4		1832.	.4879	.8597
40	204.7	205.3		1833.	.4986	.8630
41	204.8	205.3		1833.	.5090	.8665
42	204.8	205.4		1834.	.5190	.8697

NATIONAL AERONAUTICS AND SPACE ADMINISTRATION AMES RESEARCH CENTER MOFFETT FIELD CALIF *** PRELIMINARY DATA ***

3.5 FT HYPERSONIC WIND TUNNEL TEST 227

CONSTANT SET 101 * GAS-TEMP-PROBE MACH NO.=7.33 WEDGE ANG=0 PROBE ANG=0 RUN 6/2

FRAME NO.	TIME (SEC)	STRUT IN POS	ITR (R)	TEMPERATURE IN DEGREES RANKINE TC1	TC2
43	20.015	90.28	548.	972.	1601.
44	20.515	90.26	548.	991.	1607.
45	21.015	90.25	548.	1010.	1612.
46	21.515	90.22	548.	1029.	1617.
47	22.015	90.21	548.	1046.	1621.
48	22.515	90.19	548.	1065.	1625.
49	23.015	90.19	548.	1082.	1630.
50	23.515	90.18	548.	1100.	1634.
51	24.015	90.17	548.	1117.	1638.
52	24.515	90.18	548.	1134.	1642.
53	25.015	90.19	548.	1151.	1647.
54	25.515	90.19	548.	1166.	1651.
55	26.015	90.19	548.	1182.	1657.
56	26.515	90.21	548.	1197.	1661.
57	27.015	90.24	548.	1213.	1665.
58	27.515	90.25	548.	1227.	1669.
59	28.015	90.28	548.	1242.	1673.
60	28.515	90.29	548.	1255.	1676.
61	29.015	90.30	548.	1269.	1679.
62	29.515	90.32	548.	1281.	1680.
63	30.015	90.34	548.	1294.	1683.
64	30.515	90.34	548.	1306.	1684.
65	31.015	90.35	548.	1317.	1687.
66	31.515	90.35	548.	1329.	1688.
67	32.015	90.35	548.	1340.	1690.
68	32.515	90.35	548.	1351.	1691.
69	33.015	90.34	548.	1361.	1691.
70	33.515	90.35	548.	1370.	1693.
71	34.015	90.35	548.	1380.	1694.
72	34.515	90.35	548.	1388.	1695.
73	35.015	90.33	548.	1398.	1696.
74	35.515	90.34	548.	1405.	1695.
75	36.015	90.33	548.	1414.	1697.
76	36.515	90.31	548.	1421.	1698.
77	37.015	90.32	548.	1429.	1698.
78	37.515	90.31	548.	1436.	1699.
79	38.015	90.31	548.	1443.	1700.
80	38.515	90.31	548.	1449.	1701.
81	39.015	90.30	548.	1456.	1702.
82	39.515	90.31	548.	1462.	1703.

ORIGINAL PAGE IS OF POOR QUALITY

NATIONAL AERONAUTICS AND SPACE ADMINISTRATION AMES RESEARCH CENTER MOFFETT FIELD CALIF. *** PRELIMINARY DATA ***

3.5 FT HYPERSONIC WIND TUNNEL

CONSTANT SET 100 * GAS-TEMP-PROBE MACH NO.=7.35 WEDGE ANG=0 PROBE ANG=0

TEST 227

FRAME NO.	PT (PSIA)	PT CELL 2 (PSIA)	PCM TT /P * (DEGR)	PROBE / TOTAL TEMPERATURE RATIO PROB1	PROB2
43	204.0	205.1	1834.	.5290	.8731
44	204.7	205.3	1835.	.5402	.8757
45	204.8	205.3	1835.	.5504	.8786
46	204.7	205.1	1835.	.5605	.8810
47	204.7	205.3	1835.	.5702	.8836
48	204.8	205.1	1835.	.5804	.8854
49	204.8	205.4	1835.	.5896	.8879
50	204.8	205.1	1835.	.5995	.8903
51	204.8	205.4	1835.	.6086	.8924
52	204.8	205.3	1836.	.6179	.8947
53	204.8	205.4	1836.	.6268	.8970
54	204.8	205.4	1836.	.6354	.8994
55	204.8	205.6	1837.	.6437	.9019
56	204.8	205.4	1837.	.6520	.9044
57	204.8	205.4	1837.	.6601	.9064
58	204.7	205.1	1838.	.6676	.9081
59	204.8	205.3	1839.	.6753	.9097
60	204.7	205.1	1839.	.6825	.9115
61	204.7	205.3	1839.	.6899	.9132
62	204.8	205.0	1839.	.6965	.9135
63	204.8	205.1	1839.	.7039	.9149
64	204.8	205.3	1840.	.7101	.9154
65	204.8	205.4	1840.	.7159	.9165
66	204.8	205.3	1841.	.7218	.9168
67	204.8	205.3	1841.	.7277	.9181
68	204.8	205.4	1841.	.7338	.9184
69	204.8	205.1	1841.	.7393	.9188
70	204.8	205.3	1841.	.7442	.9194
71	204.8	205.6	1841.	.7495	.9200
72	204.8	205.3	1842.	.7539	.9204
73	204.8	205.4	1842.	.7588	.9207
74	204.8	205.4	1842.	.7634	.9211
75	204.8	205.4	1842.	.7678	.9215
76	204.8	205.1	1842.	.7718	.9218
77	204.8	205.4	1842.	.7757	.9220
78	204.8	205.3	1842.	.7797	.9222
79	204.8	205.3	1842.	.7834	.9231
80	204.8	205.4	1842.	.7866	.9233
81	204.8	205.3	1842.	.7904	.9240
82	204.8	205.1	1842.	.7935	.9243

NATIONAL AERONAUTICS AND SPACE ADMINISTRATION AMES RESEARCH CENTER MOFFETT FIELD CALIF. *** PRELIMINARY DATA ***

3.5 FT HYPERSONIC WIND TUNNEL

CONSTANT SET 100 0 GAS-TEMP-PROBE MACH NO.=7.35 WEDGE ANG=0 PROBE ANG=0

TEST 227

RUN 6

FRAME NO.	TIME (SEC)	STRUT IN PNS	TTR (R)	TEMPERATURE IN DEGREES RANKINE TC1	TC2
83	40.015	90.31	548.	1467.	1704.
84	40.515	90.31	548.	1473.	1704.
85	41.015	90.31	548.	1478.	1706.
86	41.515	90.30	548.	1484.	1706.
87	42.015	90.32	548.	1488.	1708.
88	42.515	90.32	548.	1494.	1709.
89	43.015	90.32	548.	1498.	1710.
90	43.515	90.33	548.	1503.	1712.
91	44.015	90.31	548.	1507.	1713.
92	44.515	90.33	548.	1511.	1714.
93	45.015	90.34	548.	1516.	1716.
94	45.515	90.36	548.	1520.	1716.
95	46.015	90.37	548.	1523.	1716.
96	46.515	90.37	548.	1527.	1716.
97	47.015	90.40	548.	1530.	1715.
98	47.515	90.42	548.	1533.	1715.
99	48.015	90.45	548.	1537.	1715.
100	48.515	90.47	548.	1540.	1715.
101	49.015	90.47	548.	1543.	1716.
102	49.515	90.51	548.	1546.	1716.
103	50.015	90.52	548.	1548.	1716.
104	50.515	90.54	548.	1551.	1716.
105	51.015	90.55	548.	1554.	1716.
106	51.515	90.53	548.	1556.	1715.
107	52.015	90.54	548.	1558.	1717.
108	52.515	90.53	548.	1561.	1717.
109	53.015	90.54	548.	1562.	1717.
110	53.515	90.52	548.	1565.	1717.
111	54.015	90.52	548.	1566.	1717.
112	54.515	90.49	548.	1569.	1718.
113	55.015	90.47	548.	1570.	1719.
114	55.515	90.47	548.	1572.	1719.
115	56.015	90.44	548.	1574.	1719.
116	56.515	90.42	548.	1576.	1718.
117	57.015	90.39	548.	1577.	1719.
118	57.515	90.37	548.	1579.	1719.
119	58.015	90.32	548.	1580.	1719.
120	58.515	90.31	548.	1582.	1719.
121	59.015	90.28	548.	1583.	1720.
122	59.515	90.27	548.	1585.	1720.

ORIGINAL PAGE IS OF POOR QUALITY

NATIONAL AERONAUTICS AND SPACE ADMINISTRATION AMES RESEARCH CENTER MOFFETT FIELD CALIF. *** PRELIMINARY DATA ***

9.5 FT HYPERSONIC WIND TUNNEL TEST 227

CONSTANT SET 100 * GAS-TEMP-PROBE MACH NO.=7.33 WEDGE ANG=0 PROBE ANG=0 RUN 5

FRAME NO.	PT (PSIA)	PT CTRL (PSIA)	PCH TT /P (DEGR)	PROBE / TOTAL TEMPERATURE RATIO PROB1	PROB2
83	204.0	205.2	1842.	.7961	.9247
84	204.8	205.2	1843.	.7996	.9250
85	204.7	205.1	1843.	.8021	.9256
86	204.8	205.1	1844.	.8047	.9252
87	204.8	205.3	1844.	.8073	.9264
88	204.8	205.3	1845.	.8096	.9263
89	204.8	205.3	1844.	.8124	.9272
90	204.8	205.3	1845.	.8147	.9281
91	204.7	205.3	1845.	.8169	.9285
92	204.8	205.3	1845.	.8192	.9289
93	204.7	205.1	1845.	.8215	.9299
94	204.8	205.1	1845.	.8236	.9302
95	204.8	205.3	1845.	.8257	.9301
96	204.7	205.1	1845.	.8276	.9298
97	204.7	205.1	1845.	.8295	.9297
98	204.6	205.1	1844.	.8311	.9300
99	204.8	205.3	1844.	.8334	.9302
100	204.8	205.1	1844.	.8351	.9303
101	204.8	205.3	1844.	.8367	.9305
102	204.8	205.4	1844.	.8381	.9302
103	204.8	205.3	1844.	.8396	.9306
104	204.8	205.3	1845.	.8407	.9305
105	204.8	205.3	1845.	.8420	.9302
106	204.7	205.4	1845.	.8431	.9301
107	204.8	205.4	1845.	.8445	.9306
108	204.8	205.3	1845.	.8458	.9305
109	204.8	205.3	1845.	.8467	.9305
110	204.8	205.1	1846.	.8476	.9301
111	204.8	205.3	1846.	.8485	.9303
112	204.8	205.1	1846.	.8496	.9303
113	204.8	205.3	1847.	.8501	.9303
114	204.8	205.4	1847.	.8514	.9307
115	204.8	205.6	1847.	.8520	.9306
116	204.8	205.6	1847.	.8533	.9301
117	204.8	205.6	1846.	.8540	.9310
118	204.8	205.6	1847.	.8552	.9311
119	204.8	205.6	1847.	.8557	.9311
120	204.8	205.4	1847.	.8565	.9311
121	204.8	205.4	1847.	.8575	.9313
122	204.8	205.6	1847.	.8580	.9313

NATIONAL AERONAUTICS AND SPACE ADMINISTRATION AMES RESEARCH CENTER MOFFETT FIELD CALIF. *** PRELIMINARY DATA ***

3.5 FT HYPERSONIC WIND TUNNEL

CONSTANT SET 100 % GAS-TEMP-PROB. MACH NO.=2.95 WEDGE ANG=0° PROBE ANG=0°

TEST 227
RUN 6/10

FRAME NO.	TIME (SEC)	STRUT IN POS	TTR (R)	TEMPERATURE IN DEGREES RANKINE (C)	(C2)
123	60.015	90.23	548.	1586.	1721.
124	60.515	90.23	548.	1588.	1721.
125	61.015	90.20	548.	1588.	1721.
126	61.515	90.20	548.	1590.	1721.
127	62.015	90.21	548.	1591.	1721.
128	62.515	90.20	548.	1592.	1720.
129	63.015	90.20	548.	1594.	1720.
130	63.515	90.22	548.	1595.	1720.
131	64.015	90.22	548.	1595.	1720.
132	64.515	90.25	548.	1596.	1721.
133	65.015	90.29	548.	1597.	1721.
134	65.515	90.30	548.	1599.	1722.
135	66.015	90.32	548.	1599.	1723.
136	66.515	90.36	548.	1599.	1723.
137	67.015	90.35	548.	1601.	1723.
138	67.515	90.36	548.	1602.	1723.
139	68.015	90.35	548.	1603.	1723.
140	68.515	90.36	548.	1603.	1722.
141	69.015	90.34	548.	1604.	1721.
142	69.515	90.35	548.	1605.	1723.
143	70.015	90.32	548.	1606.	1723.
144	70.515	90.31	548.	1606.	1723.
145	71.015	90.32	548.	1607.	1724.
146	71.515	90.31	548.	1608.	1724.
147	72.015	90.31	548.	1609.	1724.
148	72.515	90.30	548.	1610.	1723.
149	73.015	90.31	548.	1610.	1723.
150	73.515	90.31	548.	1610.	1722.
151	74.015	90.31	548.	1611.	1721.
152	74.515	90.31	548.	1612.	1721.
153	75.015	90.32	548.	1612.	1722.
154	75.515	90.32	548.	1613.	1723.
155	76.015	90.33	548.	1613.	1723.
156	76.515	90.34	548.	1614.	1723.
157	77.015	90.36	548.	1614.	1723.
158	77.515	90.37	548.	1614.	1723.
159	78.015	90.40	548.	1615.	1722.
160	78.515	90.43	548.	1616.	1722.
161	79.015	90.44	548.	1616.	1723.
162	79.515	90.47	548.	1617.	1723.

ORIGINAL PAGE IS OF POOR QUALITY

65

NATIONAL AERONAUTICS AND SPACE ADMINISTRATION AMES RESEARCH CENTER MOFFETT FIELD CALIF. *** PRELIMINARY DATA ***
9.5 FT HYPERSONIC WIND TUNNEL
CONSTANT SET 100 * GAS-TEMP-PROBE MACH NO.=7.35 WEDGE ANG=0 PROBE ANG=0

TEST 227
RUN 6/11

FRAME NO.	PT (PSIA)	PT CELL 2 (PSIA)	PCH /P	TT (DEGR)	PROBE / TOTAL TEMPERATURE RATIO PROB1	PROB2
123	204.8	205.4		1847.	.8589	.9318
124	204.8	205.4		1847.	.8596	.9318
125	204.8	205.6		1847.	.8601	.9319
126	204.8	205.6		1846.	.8613	.9321
127	204.8	205.6		1847.	.8616	.9319
128	204.8	205.6		1847.	.8619	.9311
129	204.8	205.6		1847.	.8626	.9312
130	204.8	205.6		1847.	.8631	.9311
131	204.8	205.4		1847.	.8637	.9314
132	204.8	205.6		1847.	.8638	.9314
133	204.8	205.6		1847.	.8649	.9317
134	204.8	205.6		1847.	.8654	.9321
135	204.8	205.6		1848.	.8654	.9326
136	204.8	205.6		1848.	.8657	.9327
137	204.8	205.3		1848.	.8665	.9324
138	204.8	205.3		1848.	.8667	.9320
139	204.8	205.1		1848.	.8672	.9323
140	204.8	205.3		1848.	.8674	.9320
141	204.7	205.1		1848.	.8681	.9311
142	204.8	205.1		1848.	.8686	.9321
143	204.7	205.3		1849.	.8687	.9321
144	204.8	205.3		1849.	.8689	.9320
145	204.8	205.1		1849.	.8690	.9321
146	204.7	205.1		1851.	.8690	.9313
147	204.8	205.1		1851.	.8691	.9310
148	204.8	205.3		1851.	.8695	.9307
149	204.8	205.1		1851.	.8697	.9307
150	204.8	205.1		1851.	.8701	.9302
151	204.8	205.3		1851.	.8704	.9299
152	204.8	205.1		1850.	.8711	.9301
153	204.8	205.4		1850.	.8716	.9309
154	204.8	205.3		1849.	.8724	.9319
155	204.8	205.3		1849.	.8725	.9318
156	204.8	205.6		1849.	.8726	.9319
157	204.8	205.4		1850.	.8725	.9313
158	204.8	205.6		1850.	.8727	.9312
159	204.8	205.4		1850.	.8730	.9307
160	204.8	205.4		1851.	.8731	.9307
161	204.8	205.4		1851.	.8732	.9309
162	204.8	205.4		1851.	.8738	.9312

ORIGINAL PAGE IS
OF POOR QUALITY

266

NATIONAL AERONAUTICS AND SPACE ADMINISTRATION AMES RESEARCH CENTER MOFFETT FIELD CALIF. *** PRELIMINARY DATA ***

9.5 FT HYPERSONIC WIND TUNNEL

CONSTANT SET 100 0 GAS-TEMP-PROBE MACH NO.=7.35 WEDGE ANG=0 PROBE ANG=0

TEST 227
RUN 6

FRAME NO.	TIME (SEC)	STRUT IN POS	TTR (R)	TEMPERATURE IN DEGREES RANKINE TC1	TC2
163	80.015	90.49	548.	1617.	1724.
164	80.515	90.52	548.	1617.	1724.
165	81.015	90.52	548.	1618.	1724.
166	81.515	90.51	548.	1619.	1724.
167	82.015	90.52	548.	1619.	1725.
168	82.515	90.50	548.	1620.	1725.
169	83.015	90.49	548.	1620.	1725.
170	83.515	90.47	548.	1621.	1727.
171	84.015	90.42	548.	1621.	1727.
172	84.515	90.40	548.	1622.	1728.
173	85.015	90.36	548.	1622.	1728.
174	85.515	90.34	548.	1623.	1728.
175	86.015	90.30	548.	1623.	1728.
176	86.515	90.29	548.	1624.	1728.
177	87.015	47.48	548.	1624.	1730.
178	87.515	19.15	548.	1622.	1725.
179	88.015	4.93	548.	1620.	1717.
180	88.515	4.93	548.	1617.	1708.
181	89.015	4.93	548.	1614.	1698.

ORIGINAL PAGE IS OF POOR QUALITY

67

NATIONAL AERONAUTICS AND SPACE ADMINISTRATION AMES RESEARCH CENTER MOFFETT FIELD CALIF. *** PRELIMINARY DATA ***

3.5 FT HYPERSONIC WIND TUNNEL TEST 227

CONSTANT SET 100 * GAS-TEMP-PROBE MACH NO.=7.35 WEDGE ANG=0 PROBE ANG=0 RUN X/14

FRAME NO.	PT (PSIA)	PT CELL 2 (PSIA)	PCH /P	TT (DEGR)	PROBE 1	PROBE 2	TOTAL TEMPERATURE RATIO
163	204.8	205.5		1851.	.8737	.9314	
164	204.8	205.4		1851.	.8738	.9317	
165	204.8	205.4		1851.	.8741	.9314	
166	204.8	205.4		1852.	.8742	.9310	
167	204.8	205.4		1851.	.8749	.9319	
168	204.8	205.4		1851.	.8751	.9317	
169	204.8	205.4		1851.	.8753	.9319	
170	204.8	205.4		1851.	.8756	.9327	
171	204.8	205.3		1851.	.8758	.9333	
172	204.8	205.3		1851.	.8761	.9334	
173	204.8	205.1		1851.	.8763	.9332	
174	204.8	205.3		1851.	.8769	.9337	
175	204.8	205.3		1851.	.8771	.9338	
176	204.8	205.3		1851.	.8772	.9338	
177	204.7	205.3		1852.	.8772	.9342	
178	204.7	205.1		1852.	.8762	.9315	
179	204.7	205.1		1852.	.8749	.9274	
180	204.7	205.3		1852.	.8731	.9224	
181	204.7	205.1		1853.	.8712	.9167	
A*V*E*R*A*G*E V*A*L*U*E*S							
	204.8	205.3	0.00	0.00 1839.	.710	.859	

RADIUS(IN) 12. 9. 6. 3. 0.

AVERAGE TEMPERATURE IN 12 IN.DIA., 18 IN.DIA., 24 IN.DIA., 30 IN.DIA., 36 IN.DIA. CORE.

0.000 0.000 .931 .903 .903

ORIGINAL PAGE IS OF POOR QUALITY

NATIONAL AERONAUTICS AND SPACE ADMINISTRATION AMES RESEARCH CENTER MOFFETT FIELD CALIF. *** PRELIMINARY DATA ***

3.5 FT HYPERSONIC WIND TUNNEL TEST 221

CONSTANT SET 80.# GAS-TEMP-PROBE MACH NO.=7.35 WEDGE ANG=0 PROBE ANG=0 RUN 7

FRAME NO.	TIME (SEC)	STRUT IN POS	TTR (R)	TEMPERATURE IN DEGREES RANKINE TC1	TC2
3	.015	4.95	551.	556.	561.
4	.515	4.94	551.	556.	561.
5	1.015	4.96	551.	556.	561.
6	1.515	4.94	551.	556.	561.
7	2.015	47.49	551.	556.	561.
8	2.515	47.59	551.	556.	561.
9	3.015	77.74	552.	557.	629.
10	3.515	90.42	551.	560.	708.
11	4.015	90.40	551.	561.	785.
12	4.515	90.36	551.	555.	854.
13	5.015	90.36	551.	569.	924.
14	5.515	90.32	551.	573.	989.
15	6.015	90.29	551.	579.	1048.
16	6.515	90.28	551.	585.	1103.
17	7.015	90.25	551.	592.	1155.
18	7.515	90.23	551.	600.	1203.
19	8.015	90.22	551.	609.	1248.
20	8.515	90.22	551.	619.	1288.
21	9.015	90.21	551.	629.	1324.
22	9.515	90.21	551.	641.	1357.
23	10.015	90.21	551.	652.	1387.
24	10.515	90.21	551.	666.	1415.
25	11.015	90.23	551.	680.	1442.
26	11.515	90.25	551.	694.	1465.
27	12.015	90.27	551.	708.	1486.
28	12.515	90.31	551.	725.	1505.
29	13.015	90.31	551.	742.	1523.
30	13.515	90.33	551.	758.	1540.
31	14.015	90.34	551.	777.	1555.
32	14.515	90.35	551.	794.	1570.
33	15.015	90.37	551.	814.	1583.
34	15.515	90.34	551.	832.	1597.
35	16.015	90.36	551.	852.	1608.
36	16.515	90.35	551.	872.	1619.
37	17.015	90.33	552.	893.	1630.
38	17.515	90.33	552.	914.	1641.
39	18.015	90.32	552.	935.	1652.
40	18.515	90.31	552.	956.	1661.
41	19.015	90.32	552.	977.	1670.
42	19.515	90.31	551.	998.	1677.

ORIGINAL PAGE IS OF POOR QUALITY

NATIONAL AERONAUTICS AND SPACE ADMINISTRATION AMES RESEARCH CENTER MOFFETT FIELD CALIF. *** PRELIMINARY DATA ***

3.5 FT HYPERSONIC WIND TUNNEL TEST 227

CONSTANT SET 100 * GAS-TEMP-PROBE MACH NO.=7.35 WEDGE ANG=0 PROBE ANG=0 RUN 7/2

FRAME NO.	PT (PSIA)	PT CELL 2 (PSIA)	PCH TT /P (DEGR)	PROBE / TOTAL TEMPERATURE RATIO PROB1	PROB2
3	205.1	205.5	1869.	.2974	.3001
4	205.3	205.7	1869.	.2973	.3000
5	205.1	205.7	1868.	.2973	.3002
6	205.0	205.5	1868.	.2975	.3002
7	205.0	205.5	1868.	.2976	.3003
8	204.8	205.4	1868.	.2976	.3003
9	204.3	205.4	1870.	.2979	.3364
10	204.6	205.4	1870.	.2992	.3787
11	204.3	205.3	1873.	.2995	.4190
12	204.5	205.5	1874.	.3014	.4559
13	205.0	205.4	1874.	.3036	.4929
14	204.9	205.5	1875.	.3058	.5274
15	204.9	205.4	1877.	.3084	.5584
16	205.1	205.5	1878.	.3114	.5870
17	204.9	205.6	1879.	.3151	.6147
18	205.0	205.5	1880.	.3189	.6400
19	204.9	205.5	1883.	.3236	.6629
20	204.8	205.4	1885.	.3283	.6835
21	204.2	205.4	1886.	.3334	.7020
22	204.6	205.4	1887.	.3396	.7191
23	204.2	205.3	1888.	.3456	.7349
24	204.2	205.4	1888.	.3525	.7493
25	204.3	205.4	1891.	.3595	.7624
26	204.8	205.5	1893.	.3667	.7739
27	204.3	205.5	1894.	.3740	.7844
28	204.9	205.5	1896.	.3825	.7937
29	204.8	205.6	1899.	.3906	.8023
30	204.8	205.5	1900.	.3988	.8103
31	204.9	205.7	1901.	.4085	.8181
32	205.0	205.6	1903.	.4173	.8249
33	205.1	205.7	1905.	.4270	.8310
34	205.3	205.9	1907.	.4365	.8372
35	205.1	206.0	1908.	.4465	.8428
36	205.1	206.0	1908.	.4572	.8482
37	205.4	205.9	1909.	.4678	.8539
38	205.5	205.9	1912.	.4782	.8584
39	205.3	206.0	1914.	.4885	.8630
40	205.3	206.0	1916.	.4992	.8668
41	205.3	206.0	1917.	.5098	.8709
42	205.3	205.8	1918.	.5204	.8743

ORIGINAL PAGE IS OF POOR QUALITY

NATIONAL AERONAUTICS AND SPACE ADMINISTRATION AMES RESEARCH CENTER MOFFETT FIELD CALIF. *** PRELIMINARY DATA ***

9.5 FT HYPERSONIC WIND TUNNEL TEST 227

CONSTANT SET 700.0 GAS-TEMP-PROBE MACH NO.=7.35 WEDGE ANG=0 PROBE ANG=0 RUN 7/4

FRAME NO.	TIME (SEC)	STRUT IN POS	TTR (R)	TEMPERATURE IN DEGREES RANKINE TC1	TC2
43	20.015	90.31	552.	1019.	1684.
44	20.515	90.30	552.	1040.	1691.
45	21.015	90.30	552.	1060.	1697.
46	21.515	90.29	552.	1081.	1702.
47	22.015	90.31	552.	1101.	1707.
48	22.515	90.30	552.	1120.	1712.
49	23.015	90.30	552.	1140.	1718.
50	23.515	90.31	552.	1158.	1722.
51	24.015	90.31	552.	1177.	1726.
52	24.515	90.31	552.	1195.	1728.
53	25.015	90.31	552.	1212.	1731.
54	25.515	90.32	552.	1230.	1734.
55	26.015	90.33	552.	1246.	1737.
56	26.515	90.32	552.	1262.	1739.
57	27.015	90.33	552.	1278.	1741.
58	27.515	90.34	552.	1293.	1745.
59	28.015	90.34	552.	1307.	1746.
60	28.515	90.34	552.	1321.	1748.
61	29.015	90.36	552.	1335.	1749.
62	29.515	90.37	552.	1348.	1752.
63	30.015	90.38	552.	1361.	1753.
64	30.515	90.39	552.	1373.	1755.
65	31.015	90.43	552.	1385.	1757.
66	31.515	90.44	552.	1396.	1758.
67	32.015	90.46	552.	1407.	1760.
68	32.515	90.46	552.	1418.	1761.
69	33.015	90.48	552.	1428.	1762.
70	33.515	90.50	552.	1438.	1763.
71	34.015	90.52	552.	1447.	1764.
72	34.515	90.51	552.	1455.	1767.
73	35.015	90.51	552.	1465.	1770.
74	35.515	90.52	552.	1473.	1772.
75	36.015	90.52	552.	1480.	1774.
76	36.515	90.50	552.	1488.	1776.
77	37.015	90.50	552.	1496.	1778.
78	37.515	90.48	552.	1503.	1780.
79	38.015	90.45	552.	1510.	1782.
80	38.515	90.43	552.	1517.	1783.
81	39.015	90.41	552.	1524.	1783.
82	39.515	90.39	552.	1530.	1784.

ORIGINAL PAGE IS OF POOR QUALITY

NATIONAL AERONAUTICS AND SPACE ADMINISTRATION AMES RESEARCH CENTER MOFFETT FIELD CALIF. *** PRELIMINARY DATA ***

3.5 FT HYPERSONIC WIND TUNNEL TEST 227

CONSTANT SET 100 * GAS-TEMP-PROBE MACH NO.=7.35 WEDGE ANG=0 PROBE ANG=0 RUN 76

FRAME NO.	PT (PSIA)	PT CELL 2 (PSIA)	PCM TT /P (DEGR)	PROBE / TOTAL TEMPERATURE RATIO PROB1	PROB2
43	205.1	205.8	1919.	.5309	.8776
44	205.3	206.0	1919.	.5418	.8801
45	205.3	205.9	1920.	.5522	.8838
46	205.1	205.6	1922.	.5623	.8857
47	205.1	205.7	1923.	.5724	.8878
48	205.1	205.6	1923.	.5825	.8904
49	204.9	205.5	1923.	.5926	.8934
50	205.0	205.6	1923.	.6021	.8955
51	205.3	205.9	1924.	.6117	.8970
52	204.9	205.5	1924.	.6209	.8981
53	204.7	205.6	1925.	.6296	.8991
54	204.8	205.6	1926.	.6385	.9005
55	204.8	205.5	1925.	.6471	.9022
56	204.7	205.4	1926.	.6553	.9025
57	204.2	205.4	1927.	.6632	.9039
58	204.3	205.3	1926.	.6712	.9056
59	203.5	205.2	1926.	.6784	.9053
60	204.2	205.2	1926.	.6861	.9076
61	203.5	205.3	1926.	.6932	.9083
62	204.0	205.3	1926.	.6999	.9095
63	204.3	205.2	1926.	.7068	.9104
64	204.2	205.2	1926.	.7129	.9114
65	204.2	205.3	1927.	.7186	.9117
66	203.9	205.1	1927.	.7245	.9122
67	203.9	205.2	1928.	.7297	.9128
68	204.2	205.3	1928.	.7353	.9131
69	204.1	205.1	1928.	.7404	.9139
70	204.5	205.4	1929.	.7454	.9143
71	204.3	205.4	1929.	.7500	.9146
72	204.3	205.4	1929.	.7544	.9160
73	204.3	205.4	1931.	.7587	.9167
74	204.7	205.4	1932.	.7623	.9173
75	205.0	205.5	1932.	.7664	.9186
76	204.9	205.5	1932.	.7704	.9194
77	204.9	205.6	1932.	.7745	.9204
78	204.9	205.6	1932.	.7781	.9214
79	204.9	205.6	1933.	.7813	.9221
80	204.8	205.5	1934.	.7846	.9219
81	204.8	205.5	1934.	.7879	.9219
82	204.3	205.4	1934.	.7913	.9226

ORIGINAL PAGE IS OF POOR QUALITY

NATIONAL AERONAUTICS AND SPACE ADMINISTRATION AMES RESEARCH CENTER MOFFETT FIELD CALIF. *** PRELIMINARY DATA ***
3.5 FT HYPERSONIC WIND TUNNEL TEST 227
CONSTANT SET 100 * GAS-TEMP-PROBE MACH NO.=7.35 WEDGE ANG=0 PROBE ANG=0 RUN 77

FRAME NO.	TIME (SEC)	STRUT IN POS	TTR (R)	TEMPERATURE IN DEGREES RANKINE IC1	IC2
83	40.015	90.39	552.	1536.	1785.
84	40.515	90.37	552.	1542.	1785.
85	41.015	90.34	552.	1547.	1785.
86	41.515	90.33	552.	1553.	1785.
87	42.015	90.29	552.	1558.	1786.
88	42.515	90.29	552.	1562.	1786.
89	43.015	90.26	552.	1567.	1786.
90	43.515	90.25	552.	1571.	1786.
91	44.015	90.24	552.	1576.	1786.
92	44.515	90.23	552.	1580.	1786.
93	45.015	90.21	552.	1584.	1786.
94	45.515	90.20	552.	1587.	1786.
95	46.015	90.20	552.	1591.	1786.
96	46.515	90.20	552.	1594.	1786.
97	47.015	90.17	552.	1598.	1786.
98	47.515	90.19	552.	1601.	1788.
99	48.015	90.19	552.	1604.	1789.
100	48.515	90.18	552.	1607.	1789.
101	49.015	90.19	552.	1609.	1790.
102	49.515	90.20	552.	1613.	1790.
103	50.015	90.22	552.	1615.	1791.
104	50.515	90.22	552.	1618.	1792.
105	51.015	90.24	552.	1620.	1792.
106	51.515	90.26	552.	1623.	1793.
107	52.015	90.29	552.	1625.	1793.
108	52.515	90.29	552.	1627.	1793.
109	53.015	90.30	552.	1630.	1793.
110	53.515	90.31	552.	1632.	1793.
111	54.015	90.33	552.	1634.	1793.
112	54.515	90.34	552.	1635.	1793.
113	55.015	90.34	552.	1637.	1793.
114	55.515	90.33	552.	1639.	1793.
115	56.015	90.35	552.	1641.	1793.
116	56.515	90.35	552.	1642.	1793.
117	57.015	90.35	552.	1644.	1793.
118	57.515	90.33	552.	1645.	1794.
119	58.015	90.35	552.	1646.	1794.
120	58.515	90.34	552.	1648.	1795.
121	59.015	90.33	552.	1650.	1795.
122	59.515	90.32	552.	1651.	1796.

ORIGINAL PAGE IS OF POOR QUALITY

NATIONAL AERONAUTICS AND SPACE ADMINISTRATION AMES RESEARCH CENTER MOFFETT FIELD CALIF. *** PRELIMINARY DATA ***

3.5 FT HYPERSONIC WIND TUNNEL TEST 227

CONSTANT SET 100 * GAS-TEMP-PROBE MACH NO.=7.35 WEDGE ANG=0 PROBE ANG=0 RUN 7/8

FRAME NO.	PT (PSIA)	PT CELL 2 (PSIA)	PCH /P	TT (DEGR)	PROBE / TOTAL TEMPERATURE RATIO PROB1	PROB2
83	204.8	205.5		1934.	.7939	.9226
84	204.8	205.5		1934.	.7971	.9231
85	204.9	205.5		1935.	.7997	.9229
86	204.9	205.5		1937.	.8017	.9220
87	204.8	205.5		1936.	.8044	.9222
88	204.8	205.5		1935.	.8072	.9226
89	204.8	205.5		1935.	.8098	.9229
90	204.9	205.5		1935.	.8123	.9234
91	204.9	205.5		1936.	.8139	.9227
92	205.0	205.7		1937.	.8156	.9224
93	205.1	205.7		1937.	.8175	.9222
94	205.0	205.5		1937.	.8193	.9219
95	205.1	205.7		1938.	.8210	.9214
96	205.1	205.8		1938.	.8228	.9216
97	205.3	205.7		1937.	.8246	.9221
98	205.1	205.8		1937.	.8264	.9231
99	205.1	206.0		1938.	.8280	.9234
100	205.1	205.6		1939.	.8289	.9230
101	204.9	205.8		1939.	.8298	.9230
102	205.1	205.7		1940.	.8312	.9227
103	205.0	205.7		1940.	.8326	.9233
104	205.1	205.7		1941.	.8335	.9231
105	205.1	205.9		1941.	.8348	.9234
106	205.0	205.7		1941.	.8360	.9237
107	205.3	205.9		1941.	.8373	.9237
108	205.0	205.7		1941.	.8381	.9236
109	205.1	205.6		1941.	.8396	.9237
110	205.3	205.7		1941.	.8406	.9237
111	204.9	205.5		1941.	.8416	.9235
112	205.0	205.6		1941.	.8423	.9236
113	205.1	205.5		1941.	.8435	.9238
114	204.9	205.6		1941.	.8445	.9239
115	204.9	205.6		1941.	.8456	.9240
116	204.8	205.5		1940.	.8464	.9241
117	204.9	205.5		1940.	.8473	.9242
118	204.8	205.4		1940.	.8480	.9244
119	205.0	205.4		1941.	.8480	.9241
120	204.9	205.5		1942.	.8487	.9239
121	204.8	205.5		1943.	.8490	.9241
122	204.7	205.5		1943.	.8500	.9246

ORIGINAL PAGE IS OF POOR QUALITY

NATIONAL AERONAUTICS AND SPACE ADMINISTRATION AMES RESEARCH CENTER MOFFETT FIELD CALIF. *** PRELIMINARY DATA ***

3.5 FT HYPERSONIC WIND TUNNEL

CONSTANT SET 100 * GAS-TEMP-PROBE MACH NO.=7.35 WEDGE ANG=0 PROBE ANG=0

TEST 227
RUN 7/10

FRAME NO.	TIME (SEC)	STRUT IN POS	TTR (R)	TC1	TC2
123	60.015	90.33	552.	1652.	1797.
124	60.515	90.31	552.	1654.	1797.
125	61.015	90.31	552.	1655.	1797.
126	61.515	90.31	552.	1656.	1797.
127	62.015	90.31	552.	1657.	1798.
128	62.515	90.29	552.	1659.	1798.
129	63.015	90.31	552.	1660.	1797.
130	63.515	90.30	552.	1661.	1797.
131	64.015	90.30	552.	1662.	1797.
132	64.515	90.32	552.	1663.	1797.
133	65.015	90.31	552.	1664.	1797.
134	65.515	90.31	552.	1665.	1797.
135	66.015	90.32	552.	1666.	1798.
136	66.515	90.32	552.	1667.	1799.
137	67.015	90.34	552.	1668.	1799.
138	67.515	90.34	552.	1668.	1799.
139	68.015	90.36	552.	1669.	1799.
140	68.515	90.36	552.	1671.	1800.
141	69.015	90.37	552.	1671.	1800.
142	69.515	90.39	552.	1672.	1800.
143	70.015	90.44	552.	1672.	1800.
144	70.515	90.44	552.	1674.	1801.
145	71.015	90.45	552.	1675.	1801.
146	71.515	90.48	552.	1675.	1801.
147	72.015	90.51	552.	1676.	1801.
148	72.515	90.52	552.	1677.	1801.
149	73.015	90.54	552.	1678.	1801.
150	73.515	90.54	552.	1679.	1802.
151	74.015	90.53	552.	1679.	1802.
152	74.515	90.53	552.	1679.	1801.
153	75.015	90.54	552.	1680.	1801.
154	75.515	90.52	552.	1681.	1801.
155	76.015	90.52	552.	1682.	1801.
156	76.515	90.51	552.	1682.	1801.
157	77.015	90.48	552.	1683.	1801.
158	77.515	90.47	552.	1683.	1801.
159	78.015	90.43	552.	1683.	1801.
160	78.515	90.42	552.	1685.	1801.
161	79.015	90.41	552.	1685.	1801.
162	79.515	90.37	552.	1686.	1801.

TEMPERATURE IN DEGREES RANKINE

ORIGINAL PAGE IS OF POOR QUALITY

NATIONAL AERONAUTICS AND SPACE ADMINISTRATION AMES RESEARCH CENTER MOFFETT FIELD CALIF. *** PRELIMINARY DATA ***

9.5 FT HYPERSONIC WIND TUNNEL — TEST 227

CONSTANT SET 100 * GAS-TEMP-PROBE MACH NO.=7.35 WEDGE ANG=0 PROBE ANG=0 — RUN 711

FRAME NO.	PT (PSIA)	PT CELL 2 (PSIA)	PCH /P	TT (DEGR)	PROBE / TOTAL TEMPERATURE RATIO PROB1	PROB2
123	204.9	205.4		1942.	.8508	.9250
124	204.8	205.4		1943.	.8513	.9248
125	204.7	205.5		1943.	.8519	.9251
126	205.0	205.4		1943.	.8525	.9252
127	204.9	205.5		1944.	.8528	.9247
128	204.8	205.5		1944.	.8533	.9247
129	204.7	205.5		1943.	.8542	.9248
130	204.8	205.6		1943.	.8548	.9248
131	204.9	205.5		1943.	.8554	.9247
132	204.8	205.6		1943.	.8561	.9248
133	204.9	205.5		1943.	.8563	.9248
134	204.7	205.4		1944.	.8564	.9247
135	204.6	205.4		1944.	.8569	.9248
136	204.8	205.4		1945.	.8572	.9252
137	204.9	205.4		1944.	.8577	.9256
138	204.8	205.6		1945.	.8578	.9251
139	205.0	205.5		1944.	.8585	.9254
140	205.1	205.6		1945.	.8588	.9253
141	205.0	205.7		1945.	.8594	.9256
142	205.1	205.8		1944.	.8599	.9258
143	205.1	205.7		1944.	.8600	.9258
144	205.0	205.7		1944.	.8609	.9261
145	205.1	205.8		1945.	.8610	.9257
146	205.3	206.0		1946.	.8607	.9256
147	205.3	205.8		1946.	.8613	.9258
148	205.3	205.9		1946.	.8619	.9259
149	205.3	205.9		1947.	.8619	.9254
150	205.3	205.9		1947.	.8623	.9259
151	205.0	206.0		1946.	.8628	.9260
152	205.1	205.7		1947.	.8627	.9254
153	205.0	205.6		1947.	.8629	.9251
154	205.1	205.5		1947.	.8636	.9254
155	205.1	205.6		1946.	.8640	.9255
156	205.0	205.7		1946.	.8643	.9255
157	205.0	205.5		1947.	.8642	.9250
158	205.0	205.5		1947.	.8646	.9253
159	204.8	205.6		1947.	.8647	.9252
160	205.0	205.6		1947.	.8653	.9253
161	205.0	205.5		1947.	.8657	.9254
162	204.9	205.5		1946.	.8661	.9256

ORIGINAL PAGE IS OF POOR QUALITY

NATIONAL AERONAUTICS AND SPACE ADMINISTRATION AMES RESEARCH CENTER MOFFETT FIELD CALIF. *** PRELIMINARY DATA ***

3.5 FT HYPERSONIC WIND TUNNEL TEST 227

CONSTANT SET 100 ° GAS-TEMP-PROBE MACH NO.=7.35 WEDGE ANG=0 PROBE ANG=0 RUN 7/13

FRAME NO.	TIME (SEC)	STRUT IN POS	TTR (R)	TEMPERATURE IN DEGREES RANKINE TC1	TC2
163	80.015	90.36	552.	1686.	1802.
164	80.515	90.32	552.	1687.	1803.
165	81.015	90.30	552.	1687.	1804.
166	81.515	90.29	552.	1688.	1805.
167	82.015	90.28	552.	1689.	1805.
168	82.515	90.27	552.	1689.	1804.
169	83.015	90.23	552.	1689.	1804.
170	83.515	90.23	552.	1690.	1804.
171	84.015	90.22	552.	1690.	1805.
172	84.515	90.21	552.	1690.	1808.
173	85.015	90.21	552.	1692.	1810.
174	85.515	47.15	552.	1692.	1811.
175	86.015	4.94	552.	1690.	1804.
176	86.515	4.94	552.	1687.	1794.
177	87.015	4.94	552.	1685.	1783.

ORIGINAL PAGE IS OF POOR QUALITY

NATIONAL AERONAUTICS AND SPACE ADMINISTRATION AMES RESEARCH CENTER MOFFETT FIELD CALIF. *** PRELIMINARY DATA ***

3.5 FT HYPERSONIC WIND TUNNEL TEST 227

CONSTANT SET 100 * GAS-TEMP-PROBE MACH NO.=7.35 WEDGE ANG=0 PROBE ANG=0 RUN 7/14

FRAME NO.	PT (PSIA)	PT CELL 2 (PSIA)	PCH /P	TT (DEGR)	PROBE / TOTAL TEMPERATURE RATIO PROB1	PROB2
163	205.1	205.5		1946.	.8664	.9259
164	204.8	205.5		1946.	.8668	.9266
165	204.8	205.5		1946.	.8669	.9272
166	204.9	205.5		1946.	.8671	.9275
167	205.0	205.5		1946.	.8676	.9275
168	205.0	205.5		1947.	.8675	.9268
169	204.9	205.5		1947.	.8675	.9265
170	205.0	205.5		1947.	.8678	.9267
171	205.0	205.5		1947.	.8683	.9279
172	204.9	205.5		1947.	.8684	.9288
173	204.9	205.4		1948.	.8687	.9291
174	205.3	205.5		1948.	.8686	.9296
175	205.0	205.7		1949.	.8669	.9254
176	205.3	205.7		1950.	.8650	.9233
177	205.1	205.6		1950.	.8638	.9141
A*V*E*R*A*G*E V*A*L*U*E*S						
	204.9	205.6	0.00	0.00 1927.	.701	.858

RADIUS(IN) 12. 9. 6. 3. 0.

AVERAGE TEMPERATURE IN 12 IN.DIA., 18 IN.DIA., 24 IN.DIA., 30 IN.DIA., 36 IN.DIA. CORE.
0.000 0.000 .926 .897 .897

ORIGINAL PAGE IS OF POOR QUALITY

78

CONSTANT [illegible] RDL MACH NO. [illegible] DEF ANG=0 PROBE ANG=0 RL [illegible]

FRAME NO.	TIME (SEC)	STRUT PR PSIA	VTR (M/S)	TCL	TCP
9	3.015	61.74	555.	550.	600.
10	3.515	90.40	555.	878.	870.
11	4.015	90.49	555.	904.	[illegible]
12	4.515	90.52	555.	921.	1222.
13	5.015	90.45	555.	650.	1347.
14	5.515	90.50	555.	681.	1440.
15	6.015	90.54	555.	715.	1524.
16	6.515	90.55	555.	752.	1583.
17	7.015	90.59	555.	790.	1631.
18	7.515	90.61	555.	830.	1670.
19	8.015	90.59	555.	871.	1702.
20	8.515	90.59	555.	914.	1732.
21	9.015	90.58	555.	957.	1759.
22	9.515	90.54	555.	1000.	1783.
23	10.015	90.48	555.	1044.	1802.
24	10.515	90.45	555.	1087.	1821.
25	11.015	90.40	555.	1129.	1839.
26	11.515	90.35	555.	1171.	1854.
27	12.015	90.32	555.	1212.	1865.
28	12.515	90.30	555.	1251.	1873.
29	13.015	90.28	555.	1290.	1883.
30	13.515	90.27	555.	1326.	1891.
31	14.015	90.27	555.	1363.	1901.
32	14.515	90.27	555.	1397.	1907.
33	15.015	90.29	555.	1429.	1915.
34	15.515	90.32	555.	1460.	1922.
35	16.015	90.35	555.	1490.	1929.
36	16.515	90.38	555.	1518.	1939.
37	17.015	90.41	555.	1545.	1945.
38	17.515	90.42	555.	1570.	1951.
39	18.015	90.42	555.	1594.	1952.
40	18.515	90.41	555.	1616.	1952.
41	19.015	90.39	555.	1637.	1952.
42	19.515	90.38	555.	1656.	1953.
43	20.015	90.39	555.	1675.	1957.
44	20.515	90.38	555.	1692.	1959.
45	21.015	90.36	555.	1708.	1961.
46	21.515	90.36	555.	1722.	1961.
47	22.015	90.38	555.	1737.	1964.
48	22.515	90.39	555.	1753.	1968.

TEMPERATURE IN DEGREES RANKINE

ORIGINAL PAGE IS OF POOR QUALITY

NATIONAL AERONAUTICS AND SPACE ADMINISTRATION AMES RESEARCH CENTER MOFFETT FIELD CALIF. *** PRELIMINARY DATA ***

3.5 FT HYPERSONIC WIND TUNNEL

CONSTANT SET 100 * GAS-TEMP-PROBE MACH NO.=7.35 WEDGE ANG=0 PROBE ANG=0

TEST 227
RUN 8/2

FRAME NO.	PT (PSIA)	PT CELL 2 (PSIA)	PCH /P	TT ID GR	PROBE 7 TOTAL TEMPERATURE RATIO PROB1	PROB2
9	204.8	205.3		1966.	.2888	.3482
10	204.9	205.3		1967.	.2911	.4462
11	204.9	205.3		1967.	.3023	.5409
12	204.8	205.2		1966.	.3157	.6216
13	204.9	205.3		1966.	.3305	.6852
14	204.8	205.3		1967.	.3464	.7360
15	204.8	205.3		1969.	.3633	.7738
16	204.9	205.2		1971.	.3813	.8033
17	204.9	205.3		1973.	.4007	.8265
18	204.8	205.1		1974.	.4206	.8457
19	204.9	205.1		1978.	.4406	.8607
20	204.9	205.3		1980.	.4614	.8747
21	204.8	205.2		1985.	.4822	.8852
22	204.8	205.1		1989.	.5031	.8966
23	204.9	205.4		1991.	.5243	.9055
24	205.2	205.5		1992.	.5456	.9142
25	204.9	205.3		1995.	.5661	.9217
26	204.9	205.2		1998.	.5863	.9279
27	205.1	205.2		2001.	.6057	.9322
28	204.9	205.2		2003.	.6247	.9353
29	204.9	205.3		2006.	.6429	.9384
30	204.9	205.6		2009.	.6604	.9417
31	204.9	205.5		2011.	.6777	.9448
32	205.2	205.6		2013.	.6939	.9477
33	205.2	205.6		2015.	.7092	.9503
34	205.2	205.7		2016.	.7241	.9530
35	205.1	205.6		2017.	.7385	.9554
36	205.1	205.6		2019.	.7520	.9604
37	204.9	205.5		2020.	.7648	.9634
38	204.9	205.5		2021.	.7768	.9650
39	204.9	205.5		2022.	.7881	.9654
40	204.8	205.6		2025.	.7980	.9640
41	204.7	205.2		2025.	.8082	.9635
42	204.9	205.1		2025.	.8177	.9643
43	204.9	205.2		2026.	.8265	.9656
44	204.8	205.1		2027.	.8346	.9665
45	204.8	204.9		2028.	.8420	.9670
46	204.7	204.9		2029.	.8487	.9668
47	204.7	205.1		2030.	.8554	.9676
48	204.9	205.1		2032.	.8611	.9685

ORIGINAL PAGE IS OF POOR QUALITY

[illegible] CHAMBER [illegible] FIELD [illegible] PRELIMINARY DATA

[illegible] MINO [illegible] TEST 227

CONSTANT SET [illegible] GAS [illegible] WASH NO. [illegible] WEDGE ANGLE [illegible] CORE ANGLE [illegible] RUN 14

FRAME NO.	TIME (SEC)	STRUT IN PDS	TTR (R)	TEMPERATURE IN DEGREES RANKING TCL	TCR
49	23.015	90.40	555.	1762.	1971.
50	23.515	90.44	555.	1775.	1973.
51	24.015	90.48	555.	1784.	1975.
52	24.515	90.53	555.	1794.	1979.
53	25.015	90.56	555.	1803.	1982.
54	25.515	90.59	555.	1812.	1985.
55	26.015	90.57	555.	1820.	1987.
56	26.515	90.55	555.	1828.	1987.
57	27.015	90.52	555.	1835.	1987.
58	27.515	90.48	555.	1841.	1985.
59	28.015	90.42	555.	1848.	1985.
60	28.515	90.35	555.	1853.	1985.
61	29.015	90.31	555.	1858.	1983.
62	29.515	90.29	555.	1863.	1983.
63	30.015	90.26	555.	1867.	1982.
64	30.515	90.25	555.	1871.	1981.
65	31.015	90.26	555.	1874.	1983.
66	31.515	90.27	555.	1878.	1979.
67	32.015	90.29	555.	1881.	1978.
68	32.515	90.33	555.	1884.	1978.
69	33.015	90.36	555.	1886.	1979.
70	33.515	90.40	555.	1889.	1981.
71	34.015	90.41	555.	1891.	1982.
72	34.515	90.43	555.	1893.	1983.
73	35.015	90.41	555.	1895.	1985.
74	35.515	90.40	555.	1897.	1986.
75	36.015	90.39	555.	1900.	1988.
76	36.515	90.37	555.	1900.	1989.
77	37.015	90.37	555.	1903.	1990.
78	37.515	90.37	555.	1905.	1990.
79	38.015	90.38	555.	1907.	1991.
80	38.515	90.39	555.	1908.	1991.
81	39.015	90.40	555.	1909.	1992.
82	39.515	90.44	555.	1911.	1993.
83	40.015	90.49	555.	1912.	1992.
84	40.515	90.52	555.	1914.	1994.
85	41.015	90.59	555.	1915.	1993.
86	41.515	90.59	555.	1915.	1994.
87	42.015	90.58	555.	1917.	1993.
88	42.515	90.53	555.	1918.	1991.

ORIGINAL PAGE IS OF POOR QUALITY

81

NATIONAL AERONAUTICS AND SPACE ADMINISTRATION AMES RESEARCH CENTER MOFFETT FIELD CALIF. *** PRELIMINARY DATA ***

3.5 FT HYPERSONIC WIND TUNNEL

CONSTANT SET 100 * GAS-TEMP-PROBE MACH NO.=7.35 WEDGE ANG=0 PROBE ANG=0

TEST 227

RUN 8/4

FRAME NO.	PT (PSIA)	PT CELL 2 (PSIA)	PCH /P	TT (DEGR)	PROBE / TOTAL TEMPERATURE RATIO PROB1	PROB2
49	204.8	205.1		2033.	.8666	.9696
50	204.8	205.3		2034.	.8716	.9701
51	205.1	205.6		2036.	.8761	.9702
52	204.9	205.5		2038.	.8804	.9712
53	204.9	205.4		2039.	.8843	.9719
54	204.9	205.6		2039.	.8886	.9736
55	204.9	205.3		2040.	.8926	.9741
56	204.9	205.4		2040.	.8962	.9740
57	204.9	205.6		2040.	.8998	.9740
58	204.9	205.4		2040.	.9026	.9732
59	204.9	205.6		2041.	.9055	.9729
60	204.9	205.5		2041.	.9078	.9723
61	204.9	205.6		2041.	.9107	.9719
62	204.9	205.3		2040.	.9130	.9719
63	204.9	205.3		2041.	.9146	.9710
64	204.9	205.3		2042.	.9162	.9703
65	205.1	205.2		2041.	.9182	.9699
66	204.9	205.4		2041.	.9199	.9695
67	204.8	205.4		2042.	.9210	.9688
68	204.7	205.3		2043.	.9222	.9686
69	204.9	205.5		2043.	.9234	.9689
70	204.9	205.3		2043.	.9246	.9696
71	204.9	205.6		2044.	.9254	.9700
72	204.9	205.3		2045.	.9260	.9700
73	204.9	205.5		2045.	.9268	.9705
74	204.9	205.5		2045.	.9273	.9710
75	204.9	205.6		2046.	.9285	.9716
76	204.9	205.4		2046.	.9290	.9725
77	204.9	205.3		2047.	.9299	.9722
78	204.9	205.3		2047.	.9305	.9722
79	205.2	205.6		2047.	.9314	.9723
80	204.9	205.1		2047.	.9320	.9724
81	204.9	205.4		2048.	.9325	.9730
82	205.2	205.5		2048.	.9331	.9730
83	204.9	205.4		2049.	.9332	.9722
84	204.9	205.4		2049.	.9340	.9728
85	204.9	205.5		2050.	.9343	.9726
86	205.2	205.5		2049.	.9346	.9727
87	205.2	205.4		2050.	.9355	.9722
88	205.2	205.6		2050.	.9359	.9715

NATIONAL AERONAUTICS AND SPACE ADMINISTRATION AMES RESEARCH CENTER MOFFETT FIELD CALIF. RTP PRELIMINARY DATA

3.5 FT HYPERSONIC WIND TUNNEL TEST 227

CONSTANT SET 100 * GAS-TEMP-PROBE MACH NO.=7.35 WEDGE ANG=0 PROBE ANG=0 RUN 8

FRAME NO.	TIME (SEC)	STRUT IN POS	TTR (R)	TEMPERATURE IN DEGREES RANKINE IC1	IC2
89	43.015	90.49	555.	1919.	1992.
90	43.515	90.45	555.	1920.	1992.
91	44.015	90.37	555.	1921.	1993.
92	44.515	90.33	555.	1922.	1993.
93	45.015	90.30	555.	1923.	1993.
94	45.515	90.28	555.	1924.	1994.
95	46.015	90.26	555.	1924.	1994.
96	46.515	90.26	555.	1925.	1996.
97	47.015	90.28	555.	1926.	1998.
98	47.515	90.30	555.	1927.	2000.
99	48.015	90.34	555.	1928.	2000.
100	48.515	90.37	555.	1929.	2001.
101	49.015	90.41	555.	1930.	2001.
102	49.515	90.41	555.	1931.	2001.
103	50.015	90.39	555.	1932.	2002.
104	50.515	90.39	555.	1933.	2002.
105	51.015	90.36	555.	1934.	2005.
106	51.515	90.36	555.	1936.	2009.
107	52.015	90.35	555.	1937.	2010.
108	52.515	90.35	555.	1938.	2009.
109	53.015	90.36	555.	1939.	2009.
110	53.515	90.38	555.	1940.	2009.
111	54.015	90.42	555.	1942.	2011.
112	54.515	90.47	555.	1943.	2013.
113	55.015	90.52	555.	1944.	2013.
114	55.515	90.57	555.	1945.	2013.
115	56.015	90.56	555.	1946.	2011.
116	56.515	90.52	555.	1947.	2009.
117	57.015	90.47	555.	1948.	2009.
118	57.515	90.40	555.	1949.	2008.
119	58.015	90.34	555.	1949.	2008.
120	58.515	90.28	555.	1949.	2009.
121	59.015	90.25	555.	1950.	2009.
122	59.515	90.23	555.	1951.	2009.
123	60.015	90.24	555.	1952.	2009.
124	60.515	90.26	555.	1952.	2009.
125	61.015	90.30	555.	1952.	2009.
126	61.515	90.35	555.	1953.	2009.
127	62.015	90.37	555.	1953.	2011.
128	62.515	90.40	555.	1954.	2012.

ORIGINAL PAGE IS OF POOR QUALITY

83

PRINTED IN U.S.A.

NATIONAL AERONAUTICS AND SPACE ADMINISTRATION AMES RESEARCH CENTER MOFFETT FIELD CALIF. *** PRELIMINARY DATA ***

3.5 FT HYPERSONIC WIND TUNNEL — TEST 227

CONSTANT SET 200 * GAS-TEMP-PROBE MACH NO.=7.35 WEDGE ANG=0 PROBE ANG=0 — RUN 8/3

FRAME NO.	PT (PSIA)	PT CELL 2 (PSIA)	PCH /P	TT (DEGR)	PROBE / TOTAL TEMPERATURE RATIO PROB1	PROB2
89	205.2	205.5		2052.	.9368	.9716
90	205.1	205.3		2051.	.9363	.9716
91	204.9	205.4		2051.	.9367	.9717
92	204.9	205.2		2051.	.9370	.9717
93	204.9	205.3		2052.	.9370	.9718
94	205.2	205.5		2052.	.9375	.9715
95	205.1	205.4		2052.	.9379	.9720
96	204.9	205.4		2052.	.9384	.9727
97	204.9	205.5		2052.	.9388	.9741
98	205.2	205.4		2052.	.9390	.9748
99	204.9	205.4		2052.	.9397	.9747
100	204.9	205.2		2053.	.9398	.9747
101	204.9	205.3		2053.	.9403	.9748
102	204.9	205.3		2053.	.9408	.9746
103	204.9	205.4		2053.	.9413	.9744
104	204.9	205.3		2053.	.9417	.9750
105	204.9	205.4		2053.	.9421	.9768
106	204.9	205.0		2053.	.9430	.9785
107	204.9	205.2		2054.	.9431	.9786
108	204.9	205.1		2055.	.9430	.9778
109	204.8	205.1		2055.	.9434	.9773
110	204.9	205.2		2056.	.9439	.9772
111	204.9	205.3		2057.	.9441	.9780
112	204.9	205.3		2057.	.9445	.9783
113	204.9	205.3		2057.	.9452	.9788
114	204.9	205.2		2057.	.9457	.9787
115	204.8	205.3		2056.	.9461	.9780
116	204.8	205.4		2057.	.9467	.9768
117	204.9	205.3		2056.	.9474	.9770
118	204.9	205.3		2057.	.9475	.9766
119	204.9	205.2		2057.	.9478	.9765
120	204.9	205.5		2056.	.9480	.9769
121	204.9	205.5		2056.	.9485	.9771
122	204.9	205.5		2057.	.9485	.9769
123	204.8	205.3		2057.	.9490	.9771
124	204.9	205.3		2057.	.9490	.9769
125	204.9	205.4		2057.	.9493	.9771
126	204.9	205.6		2056.	.9497	.9772
127	204.9	205.5		2056.	.9497	.9781
128	204.9	205.4		2056.	.9502	.9785

ORIGINAL PAGE IS OF POOR QUALITY

NATIONAL AERONAUTICS AND SPACE ADMINISTRATION AMES RESEARCH CENTER MOFFETT FIELD CALIF. *** PRELIMINARY DATA ***

3.5 FT HYPERSONIC WIND TUNNEL TEST 287

CONSTANT SET 100 * GAS-TEMP-PROBE MACH NO.=7.35 WEDGE ANG=0 PROBE ANG=0 RUN 110

FRAME NO.	TIME (SEC)	STRUT IN POS	TTR (R)	TEMPERATURE IN DEGREES RANKINE TC1	TC2
129	63.015	90.39	555.	1955.	2011.
130	63.515	90.38	555.	1955.	2010.
131	64.015	90.37	555.	1955.	2009.
132	64.515	90.36	555.	1956.	2010.
133	65.015	90.36	555.	1956.	2010.
134	65.515	90.36	555.	1957.	2013.
135	66.015	90.38	555.	1957.	2013.
136	66.515	90.41	555.	1957.	2014.
137	67.015	90.45	555.	1959.	2017.
138	67.515	90.50	555.	1959.	2020.
139	68.015	90.56	555.	1960.	2020.
140	68.515	90.59	555.	1961.	2024.
141	69.015	90.58	555.	1962.	2027.
142	69.515	90.56	555.	1963.	2027.
143	70.015	90.50	555.	1964.	2025.
144	70.515	90.43	555.	1964.	2023.
145	71.015	90.37	555.	1964.	2020.
146	71.515	90.30	555.	1966.	2018.
147	72.015	90.27	555.	1966.	2017.
148	72.515	90.25	555.	1967.	2016.
149	73.015	90.25	555.	1967.	2015.
150	73.515	90.27	555.	1967.	2017.
151	74.015	90.30	555.	1968.	2017.
152	74.515	90.37	555.	1968.	2019.
153	75.015	90.40	555.	1968.	2020.
154	75.515	90.42	555.	1968.	2020.
155	76.015	90.42	555.	1968.	2020.
156	76.515	90.43	555.	1969.	2020.
157	77.015	90.42	555.	1969.	2019.
158	77.515	90.40	555.	1969.	2017.
159	78.015	90.39	555.	1969.	2015.
160	78.515	90.38	555.	1969.	2015.
161	79.015	90.37	555.	1969.	2015.
162	79.515	90.37	555.	1969.	2015.
163	80.015	90.38	555.	1969.	2016.
164	80.515	90.39	555.	1969.	2015.
165	81.015	90.40	555.	1970.	2019.
166	81.515	90.43	555.	1970.	2020.
167	82.015	90.46	555.	1970.	2020.
168	82.515	90.49	555.	1970.	2021.

ORIGINAL PAGE IS OF POOR QUALITY

NATIONAL AERONAUTICS AND SPACE ADMINISTRATION AMES RESEARCH CENTER MOFFETT FIELD CALIF. *** PRELIMINARY DATA ***

3.5 FT HYPERSONIC WIND TUNNEL TEST 227

CONSTANT SET 100 * GAS-TEMP-PROBE MACH NO.=7.35 WEDGE ANG=0 PROBE ANG=0 RUN 8

FRAME NO.	PT (PSIA)	PT CELL 2 (PSIA)	PCH /P	TT (DEGR)	PROBE / TOTAL TEMPERATURE RATIO PROB1	PROB2
129	204.9	205.4		2056.	.9509	.9782
130	204.9	205.5		2055.	.9512	.9779
131	204.9	205.6		2056.	.9512	.9776
132	204.9	205.4		2056.	.9514	.9779
133	204.9	205.5		2057.	.9511	.9774
134	204.9	205.5		2058.	.9507	.9779
135	205.2	205.3		2058.	.9506	.9781
136	205.2	205.3		2060.	.9503	.9778
137	204.9	205.5		2060.	.9508	.9791
138	204.9	205.3		2060.	.9511	.9805
139	205.2	205.5		2061.	.9512	.9804
140	204.9	205.4		2061.	.9513	.9818
141	204.9	205.3		2061.	.9520	.9833
142	204.9	205.1		2063.	.9515	.9828
143	204.9	205.1		2063.	.9517	.9816
144	204.9	205.3		2064.	.9519	.9801
145	204.9	205.6		2064.	.9519	.9790
146	204.9	205.4		2063.	.9529	.9785
147	204.9	205.6		2063.	.9526	.9774
148	204.9	205.6		2063.	.9532	.9772
149	205.3	205.6		2064.	.9530	.9770
150	205.5	205.6		2063.	.9537	.9776
151	205.2	205.6		2062.	.9541	.9783
152	205.4	205.7		2061.	.9546	.9795
153	205.2	205.7		2062.	.9546	.9799
154	204.9	205.7		2061.	.9549	.9800
155	205.1	205.5		2061.	.9551	.9800
156	204.9	205.4		2061.	.9552	.9799
157	204.9	205.3		2061.	.9555	.9796
158	204.8	205.4		2061.	.9555	.9788
159	204.8	205.4		2061.	.9554	.9785
160	204.9	205.3		2061.	.9555	.9781
161	204.9	205.2		2061.	.9557	.9781
162	204.9	205.4		2061.	.9556	.9780
163	204.9	205.3		2061.	.9554	.9782
164	204.9	205.4		2061.	.9556	.9781
165	204.9	205.5		2061.	.9558	.9790
166	205.2	205.4		2062.	.9552	.9793
167	204.9	205.6		2063.	.9550	.9793
168	205.4	205.5		2064.	.9549	.9794

ORIGINAL PAGE IS OF POOR QUALITY

NATIONAL AERONAUTICS AND SPACE ADMINISTRATION AMES RESEARCH CENTER MOFFETT FIELD CALIF. *** PRELIMINARY DATA ***

3.5 FT HYPERSONIC WIND TUNNEL

CONSTANT SET 100 * GAS-TEMP-PROBE MACH NO.=7.35 WEDGE ANG=0 PROBE ANG=0

TEST 227
RUN 8/13

FRAME NO.	TIME (SEC)	STRUT IN POS	TTR (R)	TEMPERATURE IN DEGREES RANKINE TC1	TC2
169	83.015	90.53	555.	1971.	2025.
171	84.015	90.58	555.	1972.	2028.
172	84.515	90.59	555.	1972.	2029.
173	85.015	76.24	555.	1973.	2029.
174	85.515	47.65	555.	1974.	2032.
175	86.015	4.95	555.	1974.	2025.

ORIGINAL PAGE IS OF POOR QUALITY

PRINTED IN U.S.A.

NATIONAL AERONAUTICS AND SPACE ADMINISTRATION AMES RESEARCH CENTER MOFFETT FIELD CALIF. *** PRELIMINARY DATA ***

3.5 FT HYPERSONIC WIND TUNNEL

CONSTANT SET 100 * GAS-TEMP-PROBE MACH NO.=7.35 WEDGE ANG=0 PROBE ANG=0

TEST 227
RUN 8/4

FRAME NO.	PT (PSIA)	PT CELL 2 (PSIA)	PCH /P	TT (DEGR)	PROBE / TOTAL TEMPERATURE RATIO PROB1	PROB2
169	205.2	205.6		2065.	.9546	.9807
171	205.2	205.7		2067.	.9540	.9811
172	204.9	205.5		2067.	.9540	.9814
173	205.2	205.4		2067.	.9545	.9816
174	204.9	205.5		2067.	.9547	.9821
175	204.9	205.5		2067.	.9546	.9794
				A * V * E * R * A * G * E	V * A * L * U * E * S	
	205.0	205.4	0.00	0.00 2041.	.858	.951

RADIUS(IN) 12. 9. 6. 3. 0.

AVERAGE TEMPERATURE IN 12 IN.DIA., 18 IN.DIA., 24 IN.DIA., 30 IN.DIA., 36 IN.DIA. CORE.

0.000 0.000 .981 .968 .968

ORIGINAL PAGE IS
OF POOR QUALITY

NATIONAL AERONAUTICS AND SPACE ADMINISTRATION AMES RESEARCH CENTER MOFFETT FIELD CALIF. [illegible]

3.5 FT HYPERSONIC WIND TUNNEL

CONSTANT SET 100 # GAS-TEMP PROB [illegible] DEGR ANG= PROBE ANG=0 RUN [illegible]

FRAME NO.	TIME (SEC)	STRUT POS (IN)	TEMPERATURE IN DEGREES RANKINE TC1	TC2
3	.014	4.97	549.	561.
4	.515	4.97	549.	561.
5	1.015	4.97	550.	561.
6	1.515	4.97	549.	561.
7	2.015	4.97	549.	562.
8	2.515	47.74	550.	562.
9	3.015	47.74	574.	779.
10	3.515	90.65	639.	1106.
11	4.015	90.69	733.	1384.
12	4.515	90.70	856.	1595.
13	5.015	90.72	973.	1746.
14	5.515	90.76	1087.	1853.
15	6.015	90.77	1199.	1931.
16	6.515	90.76	1289.	1980.
17	7.015	90.78	1368.	2015.
18	7.515	90.76	1437.	2034.
19	8.015	90.76	1496.	2047.
20	8.515	90.73	1550.	2058.
21	9.015	90.70	1596.	2070.
22	9.515	90.66	1641.	2076.
23	10.015	90.63	1679.	2077.
24	10.515	90.60	1712.	2080.
25	11.015	90.56	1742.	2078.
26	11.515	90.54	1769.	2077.
27	12.015	90.50	1793.	2081.
28	12.515	90.49	1815.	2089.
29	13.015	90.47	1833.	2091.
30	13.515	90.46	1850.	2092.
31	14.015	90.45	1864.	2093.
32	14.515	90.43	1878.	2099.
33	15.015	90.43	1890.	2103.
34	15.515	90.44	1901.	2108.
35	16.015	90.43	1910.	2101.
36	16.515	90.45	1918.	2099.
37	17.015	90.44	1925.	2100.
38	17.515	90.45	1932.	2101.
39	18.015	90.46	1937.	2100.
40	18.515	90.47	1942.	2097.
41	19.015	90.48	1947.	2100.
42	19.515	90.48	1952.	2101.

ORIGINAL PAGE IS OF POOR QUALITY

NATIONAL AERONAUTICS AND SPACE ADMINISTRATION AMES RESEARCH CENTER MOFFETT FIELD CALIF. *** PRELIMINARY DATA ***

3.5 FT HYPERSONIC WIND TUNNEL TEST 227

CONSTANT SET 100 * GAS-TEMP-PROBE MACH NO.=7.35 WEDGE ANG=0 PROBE ANG=0 RUN 9/2

FRAME NO.	PT (PSIA)	PT CELL 2 (PSIA)	PCH /P	TT (DEGR)	PROBE / TOTAL TEMPERATURE RATIO PROB1	PROB2
3	1000.1	1006.6		2134.	.2575	.2629
4	999.8	1006.5		2133.	.2574	.2628
5	1000.1	1006.5		2133.	.2576	.2633
6	999.8	1006.7		2133.	.2576	.2632
7	999.8	1006.4		2132.	.2577	.2636
8	999.8	1006.4		2132.	.2579	.2638
9	999.6	1006.3		2132.	.2694	.3655
10	999.8	1006.1		2132.	.2998	.5185
11	999.6	1006.4		2134.	.3433	.6486
12	999.5	1006.3		2133.	.4011	.7476
13	999.6	1006.0		2132.	.4565	.8191
14	999.6	1005.8		2132.	.5100	.8692
15	999.5	1006.0		2132.	.5621	.9059
16	999.5	1005.9		2131.	.6048	.9293
17	999.5	1006.0		2129.	.6427	.9464
18	999.5	1006.0		2129.	.6749	.9553
19	999.6	1006.1		2129.	.7029	.9613
20	999.6	1006.2		2126.	.7283	.9670
21	999.5	1005.9		2128.	.7509	.9728
22	999.6	1006.0		2128.	.7710	.9754
23	999.4	1006.0		2127.	.7891	.9763
24	999.1	1005.7		2125.	.8059	.9791
25	999.0	1005.6		2124.	.8203	.9781
26	999.1	1005.7		2125.	.8327	.9777
27	999.2	1005.5		2126.	.8433	.9790
28	998.9	1005.3		2126.	.8537	.9828
29	998.9	1005.4		2125.	.8627	.9839
30	998.9	1005.5		2124.	.8713	.9853
31	998.9	1005.6		2123.	.8781	.9859
32	999.1	1005.9		2122.	.8851	.9894
33	999.3	1005.7		2121.	.8911	.9919
34	999.3	1005.8		2120.	.8965	.9942
35	999.0	1005.7		2120.	.9010	.9910
36	998.9	1005.6		2119.	.9052	.9905
37	999.1	1005.6		2118.	.9091	.9917
38	999.0	1005.7		2117.	.9126	.9924
39	999.5	1005.9		2117.	.9151	.9918
40	999.4	1005.8		2118.	.9168	.9899
41	999.5	1006.0		2118.	.9192	.9913
42	999.5	1006.1		2118.	.9216	.9922

ORIGINAL PAGE IS OF POOR QUALITY

NATIONAL AERONAUTICS AND SPACE ADMINISTRATION AMES RESEARCH CENTER MOFFETT FIELD CALIF. *** PRELIMINARY DATA ***

3.5 FT HYPERSONIC WIND TUNNEL

CONSTANT SET 200 * GAS-TEMP-PROBE MACH [illegible] WEDGE ANG=0 PROBE ANG=0

TEST 227

RUN 9/9

FRAME NO.	TIME (SEC)	STRUT IN POS	TTR (R)	TEMPERATURE IN DEGREES RANKINE TC1	TC2
43	20.015	90.49	556.	1956.	2106.
44	20.515	90.51	556.	1960.	2108.
45	21.015	90.52	556.	1963.	2109.
46	21.515	90.54	556.	1968.	2110.
47	22.015	90.54	556.	1971.	2109.
48	22.515	90.56	556.	1975.	2110.
49	23.015	90.57	556.	1977.	2110.
50	23.515	90.59	556.	1979.	2111.
51	24.015	90.59	556.	1982.	2109.
52	24.515	90.60	556.	1984.	2111.
53	25.015	90.60	556.	1986.	2113.
54	25.515	90.60	556.	1988.	2111.
55	26.015	90.60	556.	1987.	2111.
56	26.515	90.60	556.	1979.	2109.
57	27.015	90.59	556.	1972.	2106.
58	27.515	90.59	556.	1967.	2105.
59	28.015	90.60	556.	1963.	2102.
60	28.515	90.58	556.	1960.	2101.
61	29.015	90.58	557.	1957.	2102.
62	29.515	90.58	557.	1955.	2104.
63	30.015	90.56	557.	1954.	2107.
64	30.515	90.56	557.	1953.	2109.
65	31.015	90.54	557.	1953.	2109.
66	31.515	90.55	557.	1953.	2109.
67	32.015	90.54	557.	1953.	2109.
68	32.515	90.54	557.	1953.	2109.
69	33.015	90.54	557.	1953.	2109.
70	33.515	90.52	557.	1954.	2109.
71	34.015	90.53	557.	1954.	2107.
72	34.515	90.53	557.	1954.	2109.
73	35.015	90.55	557.	1955.	2106.
74	35.515	90.54	557.	1956.	2108.
75	36.015	90.55	557.	1957.	2113.
76	36.515	90.56	557.	1958.	2116.
77	37.015	90.57	557.	1959.	2116.
78	37.515	90.58	557.	1960.	2116.
79	38.015	90.59	557.	1961.	2117.
80	38.515	90.61	557.	1962.	2115.
81	39.015	90.64	557.	1963.	2113.
82	39.515	90.68	557.	1964.	2113.

ORIGINAL PAGE IS OF POOR QUALITY

91

PRINTED IN U.S.A.

NATIONAL AERONAUTICS AND SPACE ADMINISTRATION AMES RESEARCH CENTER MOFFETT FIELD CALIF. *** PRELIMINARY DATA ***

3.5 FT HYPERSONIC WIND TUNNEL

CONSTANT SET 100 GAS-TEMP-PROBE MACH NO.=7.35 WEDGE ANG=0 PROBE ANG=0

TEST 227 RUN 9/5

FRAME NO.	PT (PSIA)	PT CELL 2 (PSIA)	PCH /P	TT (DEGR)	PROBE / TOTAL TEMPERATURE RATIO PROB1	PROB2
43	999.3	1006.0		2117.	.9239	.9947
44	999.6	1006.0		2116.	.9261	.9960
45	999.4	1006.1		2117.	.9278	.9960
46	999.1	1005.8		2119.	.9289	.9957
47	999.3	1005.7		2118.	.9309	.9958
48	999.0	1005.8		2118.	.9324	.9964
49	999.1	1005.9		2119.	.9330	.9959
50	999.0	1005.8		2118.	.9345	.9968
51	998.9	1005.8		2119.	.9355	.9954
52	999.1	1005.9		2120.	.9359	.9959
53	999.1	1006.0		2121.	.9365	.9964
54	999.2	1005.9		2122.	.9367	.9947
55	999.3	1005.9		2122.	.9366	.9949
56	999.0	1005.9		2120.	.9332	.9945
57	998.9	1005.7		2121.	.9296	.9925
58	998.8	1005.6		2122.	.9269	.9918
59	998.8	1005.4		2123.	.9250	.9901
60	998.7	1005.2		2121.	.9237	.9903
61	998.7	1005.3		2121.	.9227	.9909
62	998.6	1005.3		2121.	.9217	.9921
63	998.9	1005.5		2119.	.9222	.9944
64	998.8	1005.3		2118.	.9222	.9955
65	998.7	1005.4		2119.	.9218	.9951
66	998.8	1005.6		2120.	.9215	.9951
67	998.8	1005.5		2121.	.9211	.9944
68	999.0	1005.5		2121.	.9209	.9942
69	998.9	1005.7		2122.	.9208	.9941
70	998.7	1005.3		2122.	.9208	.9940
71	998.8	1005.3		2122.	.9207	.9931
72	998.7	1005.1		2123.	.9208	.9935
73	998.7	1005.3		2122.	.9213	.9926
74	998.7	1005.2		2120.	.9226	.9943
75	998.7	1005.3		2120.	.9230	.9968
76	998.6	1005.2		2121.	.9231	.9976
77	998.8	1005.4		2122.	.9229	.9970
78	999.0	1005.7		2122.	.9239	.9974
79	999.0	1005.7		2123.	.9238	.9970
80	999.4	1005.8		2125.	.9233	.9953
81	999.4	1005.9		2123.	.9245	.9952
82	999.4	1005.9		2122.	.9255	.9957

ORIGINAL PAGE IS OF POOR QUALITY

NATIONAL AERONAUTICS AND SPACE ADMINISTRATION AMES RESEARCH CENTER MOFFETT FIELD, CALIF. — PRELIMINARY DATA

3.5 FT HYPERSONIC WIND TUNNEL TEST 227

CONSTANT SET JOB # GAS-TEMP-PROBE MACH NO.=7.35 WEDGE ANG=0 PROBE ANG=0 RUN # 9/5

FRAME NO.	TIME (SEC)	STRUT IN POS	FTR (R)	TEMPERATURE IN DEGREES RANKINE TC1	TC2
83	40.015	90.69	557.	1965.	2113.
84	40.515	90.72	558.	1965.	2115.
85	41.015	90.74	558.	1966.	2118.
86	41.515	90.77	558.	1968.	2121.
87	42.015	90.75	558.	1969.	2121.
88	42.515	90.76	558.	1970.	2121.
89	43.015	90.73	558.	1972.	2119.
90	43.515	90.72	558.	1972.	2121.
91	44.015	90.70	558.	1973.	2120.
92	44.515	90.66	558.	1974.	2126.
93	45.015	90.62	558.	1976.	2125.
94	45.515	90.58	558.	1977.	2127.
95	46.015	90.54	558.	1979.	2131.
96	46.515	90.53	558.	1981.	2139.
97	47.015	90.49	558.	1984.	2146.
98	47.515	90.45	558.	1987.	2151.
99	48.015	90.42	558.	1989.	2152.
100	48.515	90.41	558.	1992.	2148.
101	49.015	90.41	558.	1993.	2141.
102	49.515	90.40	558.	1994.	2140.
103	50.015	90.39	559.	1996.	2137.
104	50.515	90.41	559.	1996.	2137.
105	51.015	90.43	559.	1996.	2130.
106	51.515	90.46	559.	1996.	2123.
107	52.015	90.50	559.	1996.	2129.
108	52.515	90.53	559.	1997.	2136.
109	53.015	90.55	559.	1997.	2141.
110	53.515	90.56	559.	1999.	2141.
111	54.015	90.56	559.	2000.	2137.
112	54.515	90.56	559.	2000.	2134.
113	55.015	90.55	559.	2001.	2134.
114	55.515	90.54	559.	2001.	2137.
115	56.015	90.53	559.	2002.	2140.
116	56.515	90.52	559.	2003.	2141.
117	57.015	90.52	559.	2004.	2138.
118	57.515	90.52	559.	2004.	2139.
119	58.015	90.52	559.	2005.	2142.
120	58.515	90.53	559.	2005.	2143.
121	59.015	90.55	560.	2007.	2142.
122	59.515	90.56	561.	2007.	2139.

ORIGINAL PAGE IS OF POOR QUALITY

935

NATIONAL AERONAUTICS AND SPACE ADMINISTRATION AMES RESEARCH CENTER MOFFETT FIELD CALIF. *** PRELIMINARY DATA ***

3.5 FT HYPERSONIC WIND TUNNEL TEST 227

CONSTANT SET 100 * GAS-TEMP-PROBE MACH NO.=7.35 WEDGE ANG=0 PROBE ANG=0 RUN 9/8

FRAME NO.	PT (PSIA)	PT CELL 2 (PSIA)	PCH /P	TT (DEGR)	PROBE / TOTAL TEMPERATURE RATIO PROB1	PROB2
83	999.4	1006.0		2123.	.9255	.9951
84	999.4	1006.1		2126.	.9246	.9949
85	999.3	1006.1		2127.	.9243	.9956
86	999.3	1006.1		2128.	.9248	.9966
87	999.3	1005.9		2128.	.9256	.9969
88	999.1	1005.8		2129.	.9257	.9955
89	999.0	1005.6		2130.	.9258	.9952
90	998.9	1005.8		2133.	.9249	.9947
91	998.9	1005.6		2134.	.9247	.9933
92	998.8	1005.4		2134.	.9253	.9962
93	998.6	1005.1		2132.	.9268	.9956
94	998.7	1005.1		2129.	.9289	.9995
95	998.5	1004.8		2127.	.9303	1.0017
96	998.8	1005.3		2127.	.9313	1.0053
97	999.0	1005.4		2128.	.9327	1.0086
98	999.1	1005.6		2128.	.9336	1.0108
99	999.3	1005.9		2128.	.9348	1.0111
100	999.1	1006.0		2129.	.9354	1.0088
101	999.1	1005.6		2131.	.9353	1.0048
102	999.1	1005.6		2128.	.9369	1.0054
103	999.1	1005.7		2127.	.9389	1.0046
104	998.9	1005.7		2125.	.9394	1.0058
105	998.9	1005.7		2123.	.9400	1.0032
106	998.8	1005.6		2122.	.9406	1.0005
107	998.8	1005.7		2122.	.9405	1.0030
108	998.9	1005.7		2123.	.9404	1.0059
109	998.8	1005.5		2124.	.9403	1.0081
110	998.7	1005.5		2126.	.9404	1.0070
111	998.6	1005.4		2127.	.9402	1.0048
112	998.7	1005.5		2129.	.9397	1.0025
113	998.8	1005.3		2129.	.9396	1.0023
114	998.6	1005.2		2129.	.9401	1.0039
115	998.8	1005.4		2128.	.9408	1.0056
116	998.8	1005.4		2128.	.9414	1.0062
117	998.7	1005.5		2127.	.9420	1.0051
118	998.9	1005.6		2125.	.9431	1.0065
119	999.3	1005.7		2125.	.9433	1.0079
120	999.3	1005.8		2126.	.9432	1.0079
121	998.9	1005.6		2127.	.9435	1.0070
122	998.8	1005.5		2126.	.9440	1.0062

ORIGINAL PAGE IS OF POOR QUALITY

NATIONAL AERONAUTICS AND SPACE ADMINISTRATION AMES RESEARCH CENTER MOFFETT FIELD CALIF. *** PRELIMINARY DATA ***

3.5 FT HYPERSONIC WIND TUNNEL

CONSTANT SET 100 * GAS-TEMP-PROBE MACH NO.=7.35 WEDGE ANG=0 PROBE ANG=0

TEST 227

RUN 9/10

FRAME NO.	TIME (SEC)	STRUT IN POS	TTR (R)	TEMPERATURE IN DEGREES RANKINE TC1	TC2
123	60.015	90.57	560.	2007.	2139.
124	60.515	90.60	560.	2008.	2141.
125	61.015	90.62	560.	2009.	2141.
126	61.515	90.65	560.	2009.	2141.
127	62.015	90.69	560.	2010.	2145.
128	62.515	90.70	560.	2010.	2146.
129	63.015	90.71	560.	2011.	2146.
130	63.515	90.74	560.	2011.	2145.
131	64.015	90.77	560.	2012.	2146.
132	64.515	90.78	560.	2013.	2149.
133	65.015	90.78	560.	2013.	2149.
134	65.515	90.79	560.	2013.	2141.
135	66.015	90.78	560.	2013.	2142.
136	66.515	90.79	560.	2013.	2141.
137	67.015	90.78	560.	2013.	2142.
138	67.515	90.78	560.	2013.	2143.
139	68.015	90.77	561.	2013.	2145.
140	68.515	90.77	561.	2013.	2146.
141	69.015	90.73	561.	2014.	2151.
142	69.515	90.73	561.	2015.	2150.
143	70.015	90.72	561.	2015.	2143.
144	70.515	90.70	561.	2014.	2139.
145	71.015	47.71	561.	2014.	2142.
146	71.515	47.71	561.	2015.	2144.
147	72.015	4.97	561.	2016.	2136.
148	72.515	4.96	561.	2017.	2124.

ORIGINAL PAGE IS OF POOR QUALITY

C-2

95

NATIONAL AERONAUTICS AND SPACE ADMINISTRATION AMES RESEARCH CENTER MOFFETT FIELD CALIF. *** PRELIMINARY DATA ***

3.5 FT HYPERSONIC WIND TUNNEL TEST 227

CONSTANT SET 100 * GAS-TEMP-PROBE MACH NO.=7.35 WEDGE ANG=0 PROBE ANG=0 RUN 9/11

FRAME NO.	PT (PSIA)	PT CELL 2 (PSIA)	PCH /P	TT (DEGR)	PROBE / TOTAL TEMPERATURE RATIO PROB1	PROB2
123	998.6	1005.3		2125.	.9447	1.0066
124	998.8	1005.6		2124.	.9456	1.0079
125	998.9	1005.4		2122.	.9464	1.0088
126	998.8	1005.8		2122.	.9467	1.0089
127	999.0	1005.7		2121.	.9476	1.0115
128	998.9	1005.8		2121.	.9477	1.0115
129	999.0	1005.8		2122.	.9475	1.0111
130	998.9	1005.8		2123.	.9475	1.0104
131	999.1	1005.8		2122.	.9481	1.0112
132	999.3	1005.8		2121.	.9490	1.0134
133	999.4	1005.8		2119.	.9496	1.0137
134	999.4	1006.1		2119.	.9500	1.0107
135	999.1	1005.9		2118.	.9503	1.0116
136	999.3	1006.0		2117.	.9507	1.0115
137	999.0	1005.7		2116.	.9511	1.0123
138	999.1	1005.7		2115.	.9516	1.0134
139	999.0	1005.8		2115.	.9516	1.0147
140	999.0	1005.7		2115.	.9518	1.0144
141	998.9	1005.7		2115.	.9523	1.0168
142	999.0	1005.6		2115.	.9531	1.0168
143	998.9	1005.6		2115.	.9527	1.0130
144	999.0	1005.8		2115.	.9523	1.0110
145	999.0	1005.5		2114.	.9529	1.0130
146	999.0	1005.7		2114.	.9531	1.0140
147	999.1	1005.8		2115.	.9536	1.0109
148	999.0	1005.9		2115.	.9535	1.0042
A*V*E*R*A*G*E V*A*L*U*E*S	999.1	1005.7	0.00	2124.	.953	

RADIUS(IN) 12. 9. 6. 3. 0.

AVERAGE TEMPERATURE IN 12 IN.DIA., 18 IN.DIA., 24 IN.DIA., 30 IN.DIA., 36 IN.DIA. CORE.

0.000 0.000 1.012 .981 .981

ORIGINAL PAGE IS OF POOR QUALITY