General Disclaimer

One or more of the Following Statements may affect this Document

- This document has been reproduced from the best copy furnished by the organizational source. It is being released in the interest of making available as much information as possible.

- This document may contain data, which exceeds the sheet parameters. It was furnished in this condition by the organizational source and is the best copy available.

- This document may contain tone-on-tone or color graphs, charts and/or pictures, which have been reproduced in black and white.

- This document is paginated as submitted by the original source.

- Portions of this document are not fully legible due to the historical nature of some of the material. However, it is the best reproduction available from the original submission.

Produced by the NASA Center for Aerospace Information (CASI)

DOE/NASA CONTRACTOR REPORT

DOE/NASA CR-150803

SOLAR HEATING AND COOLING SYSTEM DESIGN AND DEVELOPMENT (Status Summary, April - June 1978)

Prepared by

General Electric Company
Post Office Box 8555
Philadelphia, Pennsylvania 19101

Under Contract NAS8-32092 with

National Aeronautics and Space Administration
George C. Marshall Space Flight Center, Alabama 35812

For the U. S. Department of Energy

(NASA-CR-150803) SOLAR HEATING AND COOLING SYSTEM DESIGN AND DEVELOPMENT Status Summary, Apr. - Jun. 1978 (General Electric Co.) 43 p HC A03/MF A01 CSCL 10A

N79-10516

Unclas
G3/44 33857

RECEIVED
NASA STI FACILITY

U.S. Department of Energy

Solar Energy

NOTICE

This report was prepared to document work sponsored by the United States Government. Neither the United States nor its agents the United States Department of Energy, the United States National Aeronautics and Space Administration, nor any federal employees, nor any of their contractors, subcontractors or their employees, make any warranty, express or implied, or assume any legal liability or responsibility for the accuracy, completeness, or usefulness of any information, apparatus, product or process disclosed, or represent that its use would not infringe privately owned rights.

TECHNICAL REPORT STANDARD TITLE PAGE

1. REPORT NO. DOE/NASA CR-150803	2. GOVERNMENT ACCESSION NO.	3. RECIPIENT'S CATALOG NO.
4. TITLE AND SUBTITLE Solar Heating and Cooling System Design and Development (Status Summary, April - June 1978)		5. REPORT DATE July 1978
		6. PERFORMING ORGANIZATION CODE
7. AUTHOR(S)		8. PERFORMING ORGANIZATION REPORT #
9. PERFORMING ORGANIZATION NAME AND ADDRESS General Electric Company - Space Division P. O. Box 8555 Philadelphia, Pennsylvania 19101		10. WORK UNIT NO.
		11. CONTRACT OR GRANT NO. NAS8-32092
12. SPONSORING AGENCY NAME AND ADDRESS National Aeronautics and Space Administration Washington, D. C. 20546		13. TYPE OF REPORT & PERIOD COVERED Contractor Report April 1978-June 1978
		14. SPONSORING AGENCY CODE

15. SUPPLEMENTARY NOTES

This work was done under the technical management of Mr. William L. Moore, George C. Marshall Space Flight Center, Alabama.

16. ABSTRACT

The progress report provides information on the development of eight prototype solar heating and combined heating and cooling systems. This effort includes development, manufacture, test, installation, maintenance, problem resolution, and monitoring the operation of prototype systems.

The program currently consists of development of heating and cooling equipment for single-family residential and commercial applications and eight operational test sites (four heating and four heating and cooling). Four are single-family residences and four are commercial buildings.

All cost data have been removed from this report. Page 21 was redone for legibility.

17. KEY WORDS	18. DISTRIBUTION STATEMENT UC-59c Unclassified-Unlimited WILLIAM A. BROOKSBANK, JR. Mgr, Solar Heating and Cooling Project Office		
19. SECURITY CLASSIF. (of this report) Unclassified	20. SECURITY CLASSIF. (of this page) Unclassified	21. NO. OF PAGES 42	22. PRICE NTIS

MSFC - Form 3292 (Rev. December 1972)

For sale by National Technical Information Service, Springfield, Virginia 22151

TABLE OF CONTENTS

Section		Page
1	Introduction	1
	1.1 Program Direction	2
	1.2 Program Planning and Control	2
2	System Development	5
	2.1 Introduction	5
	2.2 System Integration	5
	2.3 System Development	10
	2.4 Test	32
3	Deliverable Hardware	35
	3.1 Normal, IL	35
	3.2 Spokane, WA	35
	3.3 Milwaukee, WI	35
	3.4 Ft Meade, MD	35
4	Operational Test Sites	36
	4.1 Site Identification	36
	4.2 Site Installation	37

SECTION I

INTRODUCTION

This project, a part of the Marshall Space Flight Center program for the development of solar heating and combined solar heating and cooling systems[1], involves the complete design and development of marketable systems for single family and commercial applications and the delivery, installation, and monitoring of the prototype systems. The development of the two types of systems is proceeding in parallel with selected commonality of system elements. The time required for the development of the combined heating and cooling systems is greater than for the heating systems, so the heating systems are being installed while development of the cooling subsystem continues. It is convenient to discuss the systems separately in the sections of this document.

A summary program schedule is shown in Figure 1-1.

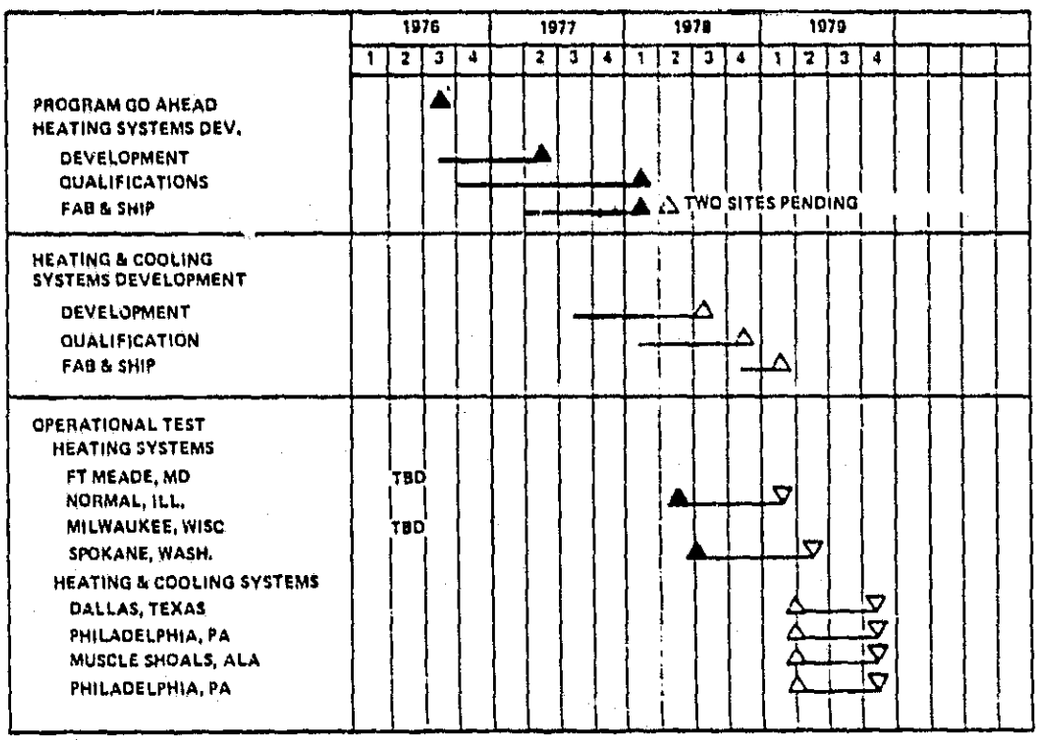

Figure 1-1. Summary Program Schedule

(1) This program is a part of the Department of Energy's activity to develop and demonstrate solar heating and combined heating and cooling systems.

TASK 1.1 - MANAGEMENT

1.1 Program Direction (WBS 1.1.1)

During this period, program operation continued in the manner established during the initial quarters. The program team shown in Figure 1.1.1, is the same as shown in the last quarter except for the following deletion:

1. W. Buck, MSFC Interface Office

The GE/NASA meetings held this period were the Quarterly Review and a Cost Briefing on April 6. On May 17 and 18, a meeting was held at Valley Forge with W. Moore and J. Graf to review the cooling system design, the TC-100 independent test data and the program status.

The Change Proposal for the construction of the operational test site at Spokane, Washington was submitted.

1.2 Program Planning and Control (WBS 1.1.2)

1.2.1 Program Control

The basic program control tool being used on this program is the control room. It was used during this period to schedule key milestones and program activities and monitor their status. This control room represents the official program schedule against which GE's technical status and progress is monitored. The scheduled data required for the monthly, quarterly and management reports is extracted from the control room posting. The schedules in the control room include the overall program summary with detailed task schedules on the side walls. The individual task sections of the control room schedules are monitored and maintained by the responsible task leaders. Program status meetings are held frequently (3 to 5 times per week) to follow hardware items. Problems involving interactions are identified and resolved at these meetings by the assignment of action items which are posted and monitored in the control room.

1.2.2 Data Management

The scheduled data submittals completed during this period were as follows:

Data Requirements No.	
-10	Quarterly Report No. 7
-11	Monthly Status Report (2)
-26	Financial Management Report - Monthly (2)
-27	Quarterly Financial Report

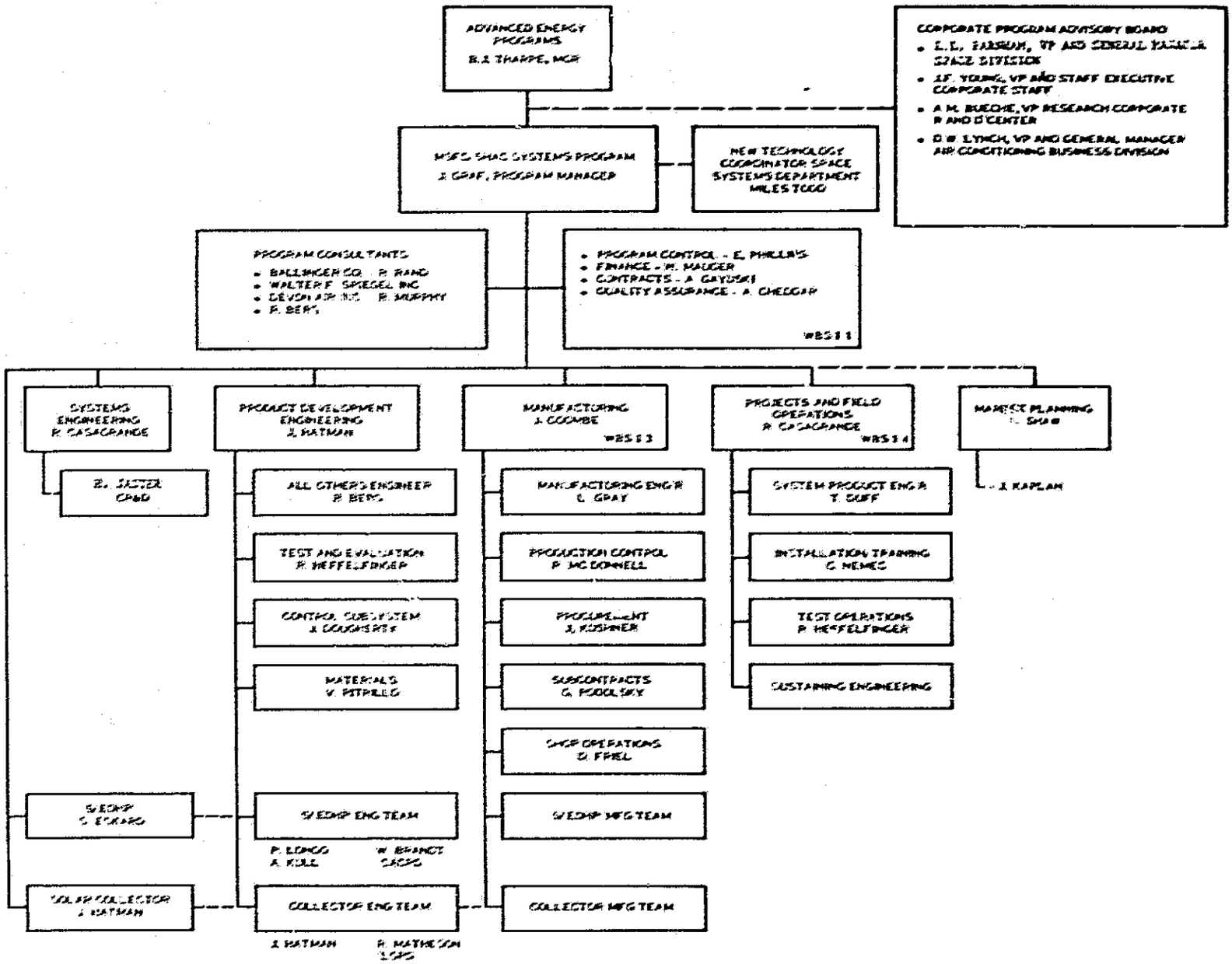

Figure 1-2. Program Organization

SECTION 2

TASK 1.2 - SYSTEM DEVELOPMENT

2.1 INTRODUCTION

2.2 System Integration

2.2.1 Heating Systems

As a result of the intermittent operation of valve V4 at Normal, Ill., a replacement for the pilot operated ASCO valve is being sought. The specification for valve V4 has been sent out to potential vendors. It was surmised that pilot operated valves in general are not reliable in this application for the low flow rates associated with 24 collector or smaller systems. The new valve will most likely not be pilot operated.

2.2.2 Heating and Cooling Systems

Valve and pump specifications have been rewritten to include the requirement for operating at 325°F and 125 psi which is consistent with the operating range for the Rankine units.

An additional study was conducted to determine the energy savings associated with a 3-ton Rankine driven air conditioner for a residential application in Fort Worth, Tex. This study included all of the identified operating characteristics for the current design. The power requirements for the unit are presented in Table 2-1.

TABLE 2-1. SYSTEM POWER REQUIREMENTS

	SOLAR (WATT)	CONVENTIONAL (WATT)
Pump P1	300	-
Pump P2	127	-
Pump P3	127	-
Refrigeration Pump	254	-
ID Fan	300	300
OD Fan	800	500
Compressor	-	3200
TOTAL	1908	4000

The primary purpose of the study was to establish that the operating temperature range was appropriate. The current design has water inlet temperatures of 230°F to 310°F. A study was made of the influence of changing the lowest operating temperature. Figure 2-1 shows the results of that study. The conclusion that can be obtained from those results are as follows:

As the minimum operating temperature is increased,

a) the running time of the Rankine unit decreases since the minimum output increases

b) the energy collected during the summer decreases due to a lower collector efficiency

c) the thermal energy storage losses increase

d) the fraction of energy supplied to the cooling load decreases

The idea of increasing the minimum temperature was to increase the solar EER with the result that net energy savings would increase. However, the loss of collected energy negated any improvement due to EER changes.

The energy savings resulting from the variation in the number of collectors is presented in Figure 2-2. Whereas the cooling energy savings may appear low, they are consistent with current changes in heat pump technology. The maximum energy savings that can be obtained is defined by

$$\underset{\text{(MMBTU)}}{\text{maximum energy savings}} = \underset{\text{(MMBTU)}}{\text{load}} \left(\frac{1}{EER_c} - \frac{1}{EER_s} \right) \times 3.41$$

With the load at 50 MMBTU, $EER_c = 9.5$ and $EER_s = 24$, the maximum energy savings are 10 MMBTU of electricity. The economic advantage for solar cooling will be based on increasing costs of electrical energy and or peak period rate differentials.

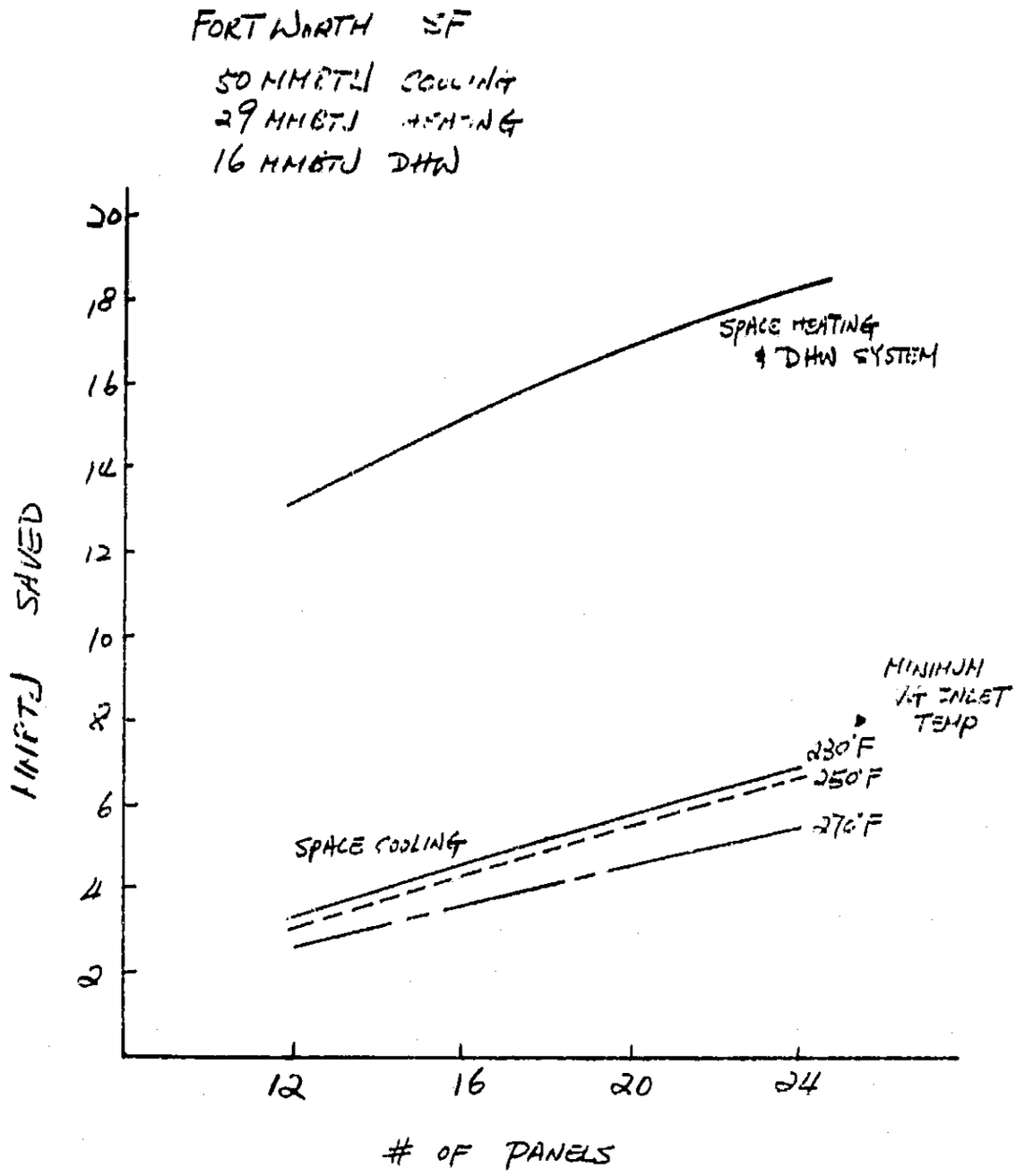

ORIGINAL PAGE IS
OF POOR QUALITY

FIGURE 2-1. OPERATING TEMPERATURES STUDY

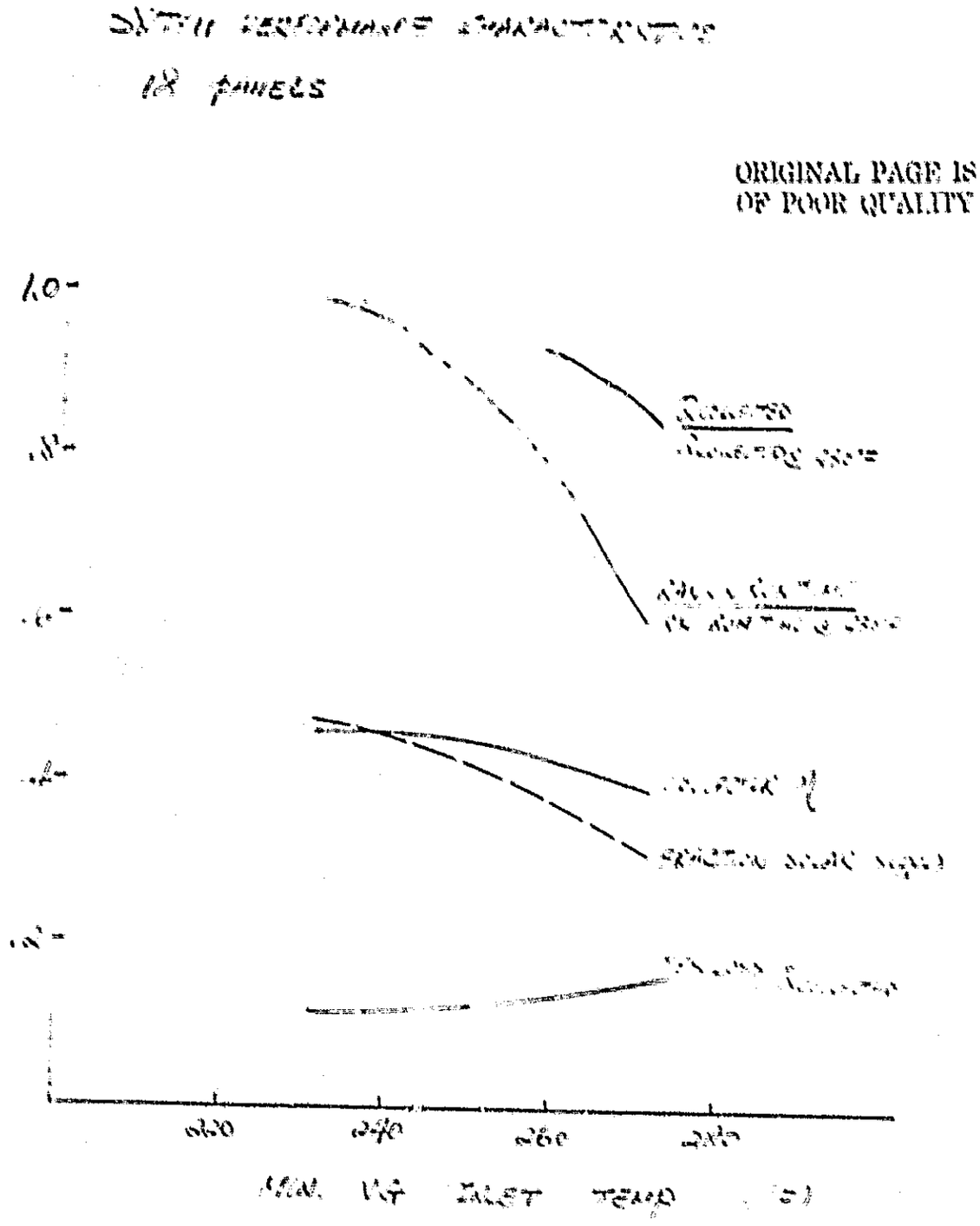

ORIGINAL PAGE IS
OF POOR QUALITY

FIGURE 2-2. COLLECTOR ENERGY SAVINGS

2.3 SYSTEM DEVELOPMENT

2.3.1 Heating Systems (WBS 1.2.2.1)

2.3.1.1 Collectors (WBS 1.2.2.1.1) (TC-100)

2.3.1.1.1 Collector Design and Performance Verification

Performance tests on TC-100 solar collectors have been successfully completed. Indoor solar simulation testing at relatively low fluid temperatures is currently in-progress at Marshall Space Flight Center using the DSET collector unit. Preliminary performance data indicates correlation between outdoor and simulation (indoor) testing.

The optical coating process became temporarily non-operational due to equipment malfunction, but is currently back on-line.

Packaging designs and testing for the shroud and frame/serpentine were completed.

2.3.1.1.2 Collector Integration

Collector integration (installation and assembly) is defined. Drawings have been modified in conjunction with installation experience. Instructions will continue to be revised and improved as experience with manufacture of parts dictate. No significant activity this period.

2.3.1.1.3 Collector Primary Loop

An optional heat dump design was identified. This concept employs the use of a commercially available liquid to air heat exchanger coupled with an attic fan. This configuration not only appears cost effective but eliminates the exposed finned-tube radiator component.

Special tests are being performed on copper/copper serpentine segments to determine the extent of degradation caused by repeated exposure to collector stagnation temperatures. Specimens are automatically heated to stagnation temperatures, held for one hour and rapidly cooled to induce oxide spalling. To date, 280 cycles have been accumulated on one specimen with a significant oxide formation. The extent of damage is being evaluated.

The diverting valve (V4) has been cause for concern due to recent field experience. An investigation has been launched to identify replacement valve candidates with an emphasis on metal-to-metal valve seats. The preliminary response is encouraging.

2.3.1.1.4 through 2.3.1.6 Ancillary Components for Heating Systems

No significant activity this period.

2.3.1.7 Controls Subsystem

2.3.1.7.1 System Components

Thirteen reworked Solar Integrator units (from Nia Associates) have been tested at Valley Forge. Eight units have passed the three day test and of these, two units have been shipped to the Normal, Ill. and Spokane, Wash. sites (1 each). The remaining five units have been placed on bench test and will be repaired.

A new Solar Integrator design and procurement has been initiated with Rho Sigma (No. Hollywood, CA). The major change in the design is the elimination of the overnight lockout after a system power failure. This function was used to prevent re-activation of the collector loop pump after a possible collector stagnation condition caused by loss of electric power.

The overnight lockout occured for all power losses greater than 0.1 seconds. At least fifteen minutes of power loss at high insolation is required to achieve stagnation conditions which could break down the fluid chemistry. To eliminate unnecessary shutdowns and still provide stagnation protection, a temperature switch, to be located on a fluid line within the Tc-100 collector, has been added to the Solar Integrator design. Upon power loss and subsequent power return, the collector pump is inhibited only if the temperature switch indicates a stagnation condition (temperature greater than 320°F) exists. The temperature switch in normal operation monitors collector fluid temperature and performs the over-temperature function previously

performed by T1 (Immersion temperature switch, outdoor enclousre, list price approximately $60), i.e., de-energization valves V4 and V5 to place the system in heat rejection state. Table 2-2 shows all operating modes

The Solar Integrator electronics package has been designed for indoor operation to ease environmental requirements. The total controller consists of three items; the temperature switch, a collector-mounted photo sensor and an electronics package. Delivery of these units is expected in mid-August.

The display panel for the Spokane controls package has been mounted on the front of the package.

An electronic outdoor reset controller has been ordered for the Spokane installation to replace the expansion bulb unit originally delivered. Electronic reset controllers are strongly recommended for all solar applications.

Expansion bulb controllers have a maximum combined tank-ambient temperature of 270°F. In the normal application of outdoor reset controllers, a boiler is maintained at different temperature levels based on outdoor ambient temperature and the reset ratio. Therefore, in the spring, the boiler temperature drops with the heating load and the reset controller sensors do not see combined over-temperature condition. In solar applications like the Spokane system, the outdoor reset controller is used to distribute the stored solar energy and does not control tank temperature. Under no load conditions (summer), thermal storage temperature rise to nearly 250°F. This fact combined with the high summer ambient temperatures ($>$75°F), forces use of an electronic outdoor reset controller.

TABLE 2-2. SOLAR INTEGRATOR OPERATIONAL MODE

NORMAL	Insolation TC > 320°F	> 35 Btu/Hr/Ft^2 TC < 300°F	Insolation < 35
Output 1	On	On	Off
Output 2	Off	On*	Off
POWER LOSS POWER RTN.			
Output 1	Off	On	Off
Output 2	Off	On*	Off

* Delayed two minutes after output 1.

2.3.1.8 Electrical Subsystem

No Significant activity in this time period.

2.3.1.9 System Integration

No significant activity in this time period.

2.3.2 Heating and Cooling Systems (WBS 1.2.2.2)

2.3.2.1 Collectors (WBS 1.2.2.2.1) (TC-101)

The TC-101 collector design is complete. The following identifies the configuration of the major components.

- Serpentine - 2 piece fin - copper/copper - ultrasonically welded
- Reflector - multi-piece - coilzak or alglass
- Insulation - fiberglass blanket
- Frame - aluminized steel - .051" thick
- Shroud - same except replace bonded tip protector with small slip-on cap plug
- Accessories - pigtail and adapter kit now included.

Studies for future designs continue. Included are: thin gauge frames, polyurethane thermal insulation, aluminum/stainless steel clamped serpentine and various accessory options.

The eight shroud, cusp reflector TC-101 solar collectors have been fabricated, installed, and GE performance testing has begun. The first configuration evaluated included coilzak cusp reflectors. Performance test results are shown on Figure 2-3 along with TC-100 data for a comparison. The thermal efficiency of the 8-shroud units with coilzak reflectors matches that of the 10-shroud vee-shaped reflector. A total of five collector units have been fabricated for the development program. All units have 8 shrouds, cusp reflector configurations, and copper/copper serpentines. Figure 2-4 shows the flow diagram for the development testing.

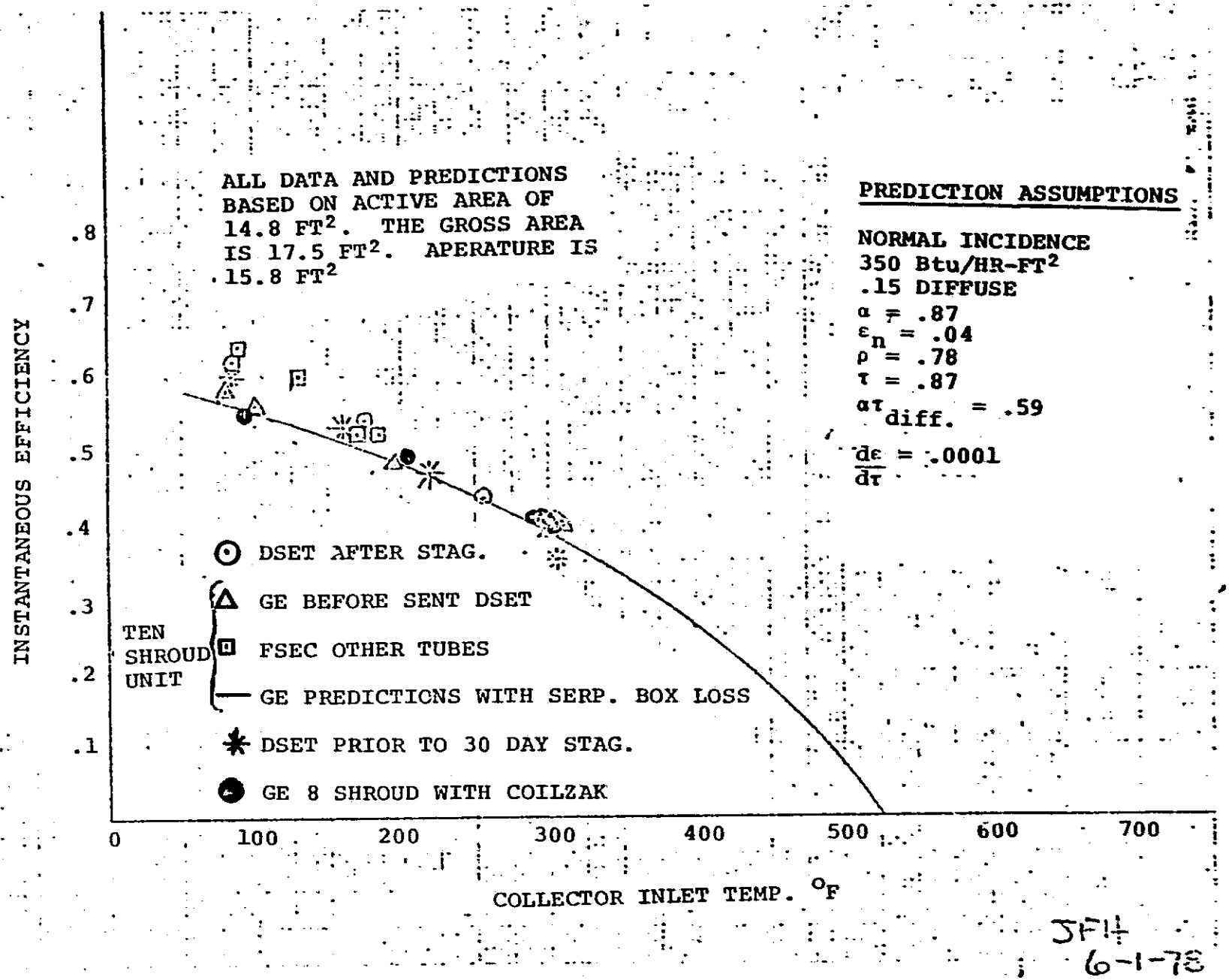

SFH
6-1-78

FIGURE 2-3. TC101/TC100 EFFIEIENCY VS FLUID INLET TEMP.

ORIGINAL PAGE IS OF POOR QUALITY

FLOW DIAGRAM

TC101 -- 8 SHROUD CONFIGURATION

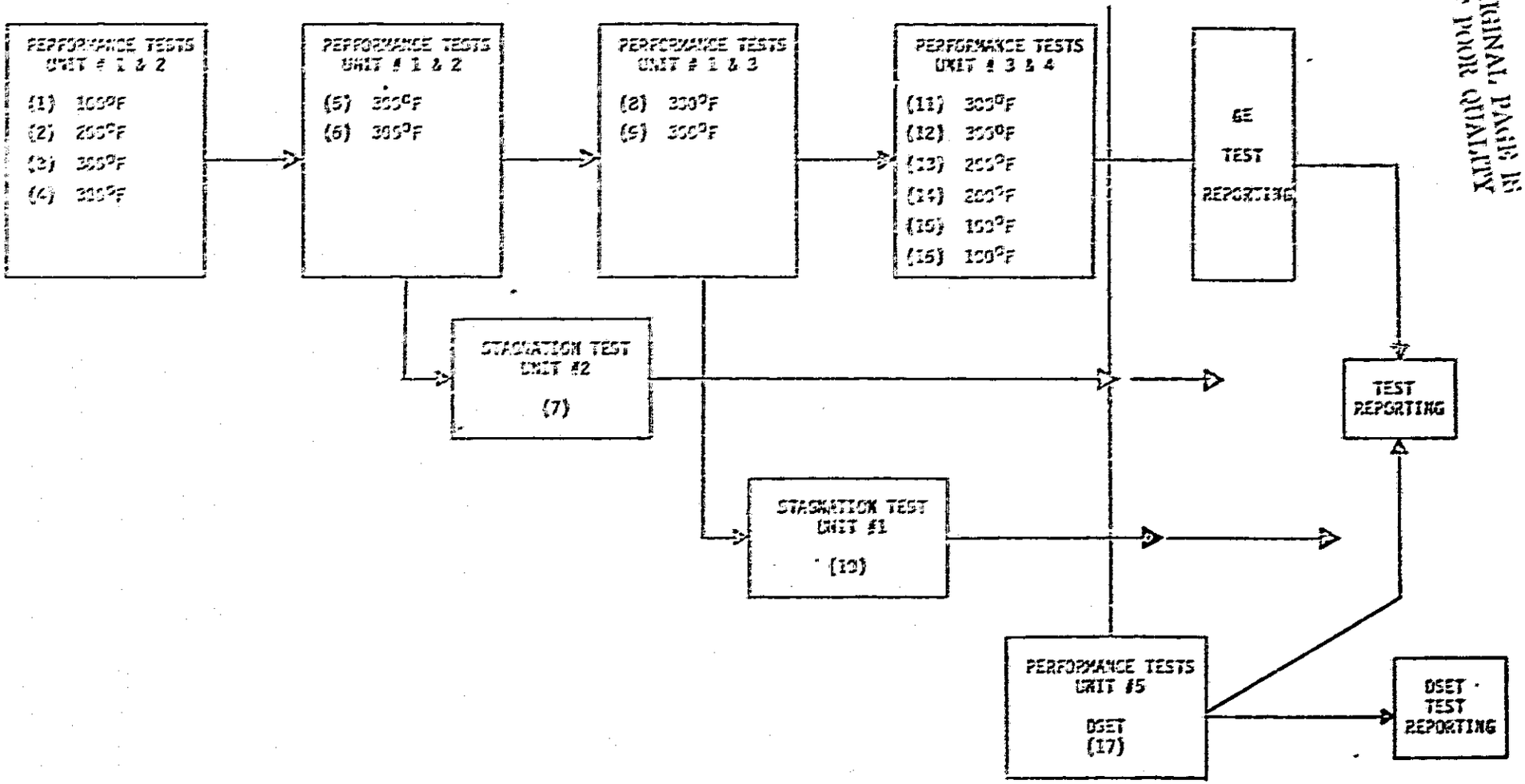

FIGURE 2-4. TC101-8 SHROUD CONFIGURATION FLOW DIAGRAM

ORIGINAL PAGE IS
OF POOR QUALITY

Closed cell polyurethane header insulation is being evaluated. Low temperature polyurethane with a high temperature fiberglass liner is the leading replacement candidate. Tests without the liner have shown polyurethane degradation and local discoloration during collector stagnation conditions. Tests with the liner are encouraging. The main problem is cost. Manufacturing investigations with outside vendors have concluded that the closed cell polyurethane material is at least a factor of ten more expensive than the fiberglass blanket. The prime configuration shall remain fiberglass until a cost-effective method or replacement is identified.

2.3.2.2 through 2.3.2.6 Ancillary Components for the Heating and Cooling System

Component specifications were updated and modified to satisfy the TC-101 requirements for heating and cooling systems.

This page has been left blank.

2.3.2.7 Cooling Controls Subsystem

As reported in the last quarterly report, the specification for Heating and Cooling has been updated to reflect changes in the Heat Pump design and the availability of a 3-stage Heating and Cooling Thermostat. Table 2-3 shows the system operation as a function of thermostat staging storage tank temperature and outdoor temperature.

The Analog Switch specification was released for quotation during the first quarter. Three vendors returned with pricing and development costs. After internal review of the quotations, a decision was reached to discontinue the development. The proposed controller performs a function which can be accomplished with several individual controllers. The Analog Temperature Switch would offer lower cost and installation advantages in a volume ($>$ 1000/yr) market; however, the high cost of development factored into the low quantity prices in the vendor quotations indicate that product acceptance would be unlikely in the next few years. Present plans are to re-evaluate this product concept when the cooling market grows to the 1000 per year level.

2.3.2.8 Electrical Subsystem

The Heating and Cooling system electrical schematic is currently under revision to represent ongoing changes in the system design.

2.3.2.9 System Integration

No significant activity in this time period.

TABLE 2-3. HEATING AND COOLING CONTROL MODES

TES TEMPERATURE	HEATING 105°F		95°F	COOLING 245°F	COOLING 230°F
Outdoor Temperature	40°F	40°F			
1st Stage Heating	Solar Hydronic		Electric Heat Pump		
2nd Stage Heating	Electric Heat Pump	Solar Hydronic & Electric Res. Ht.	Electric Heat Pump		
3rd Stage Heating*	Electric Heat Pump & Electric Res. Ht.	Solar Hydronic & Electric Res. Ht.	Electric Heat Pump & Electric Res. Ht.		
1st Stage Cooling				Switchover Valve	
2nd Stage Cooling				Solar Cooling	Electric Cooling
3rd Stage Cooling				**Electric Cooling	Electric Cooling

* 3 Levels of resistance heat vs. outdoor temperature.
** Electric cooling only after 15 minutes of solar cooling.

(Page redone for legibility)

2.3.2.10 Cooling Subsystem

During this reporting period, emphasis was on detail design of REH-100 components and on the REH-30 outdoor unit packaging design. Fabrication drawings for the two-stage 10-ton expander were completed. Specifications were completed for the 3-ton and 10-ton vapor generator and regenerator. Specifications were also completed for the 3-ton condenser coil. Packaging design for the REH-30 outdoor unit was completed and packaging layout for the REH-100 outdoor unit was 80% completed. Compressor design and fabrication for the REH-30 was completed, and the major engineering work for the REH-100 compressor was completed.

The Model-I, 3-ton expander completed a planned 1000 hour endurance test of mostly unattended operation.

2.3.10.1 Expander, Model-I

The Model-I, 3-ton vertical shaft expander completed 1000 hours of endurance testing without being removed from the test stand although several rotor "lock-ups" were encountered. Testing was essentially unattended with round-the-clock and over-the weekend testing. Post test inspection revealed local spalling (blistering) of the Cr_2O_3 coating on the end plates where the rotor had made direct contact with the coating during rotor "lock-up". (rotor "lock-up" is caused by too small a clearance between the rotor and the end plates). Post test inspection also revealed excessive ripple wear of the cam ring (stator I.D.).

Ripple wear can occur when the nose surface of the vanes are harder than the cam ring surface, which was the case for this build-up. The vanes were "Ni-Tuff" coated Vanasil-77 material. "Ni-Tuff" is Al_2O_3, and it was incorrectly applied to this set of vanes to give a thick, coarse grain, and hard surface finish. Also, the cam ring surface did not meet the required hardness.

Subsequent to the 1000 hour test, the Model-I expander was rebuilt with Al_2O_3 (METCO P130FSF-10) coated cast iron end plates. This build was run for approximately 200 hours to evaluate the wear and spalling characteristics of the Al_2O_3 coating. Post test inspection revealed very favorable results. It is believed that the greater surface porosity of the Al_2O_3 as compared to Cr_2O_3 (Union Carbide Co. LC-4) provides better oil retention between the rotor and the end plates. It is also believed that the greater porosity of the METCO coating reduces vapor pressure build-ups between the coating and substrate during rotor "lock-up", thus reducing surface blistering and spalling. The Al_2O_3 coating is also significantly lower in cost as compared to Cr_2O_3.

No additional testing of the Model-I expander is planned.

2.3.2.10.2 REH-30/100 Expander

Fabrication of two 3-ton, two-stage expanders for the REH-300 was started and their shop work is approximately 25% complete. An order was placed for a third 3-ton expander to be used in the second REH-30. Materials have been ordered for the third expander but no shop work has been started. Detail drawings for the 10-ton (REH-100) expander have been completed and have been released for fabrication. Quotes were obtained from two shops outside of GE and from the GE-Evendale shop. Based on a lower cost and delivery time, an order for the three 10-ton expanders and spare parts was placed with the GE shop. The design has been completed and drawings have been issued for the sound and thermal insulation barrier to be installed around the expander.

2.3.2.10.3 Expander/Compressor Coupling

Detail drawings for the REH-30 and REH-100 coupling interface were completed. As shown on Figure 2-5, the coupling interface consists of an outer support for attaching the expander to the compressor, a magnetic coupling, a pressure containment separating the Rankine engine fluid from the heat pump fluid, and an over-running clutch. The interface coupling for the REH-30 is very similar to that shown for the REH-100.

2.3.2.10.4 Compressor

Fabrication of the first 3-ton compressor was completed and will be on test early next quarter. Current plans call for calibrating the first compressor at heating and cooling rating points prior to it being installed in the REH-30 outdoor unit. The second compressor is to be assembled with a 6-pole motor to simulate low speed (1200 rpm) performance. It is also planned to performance and life test this compressor. The third compressor is to receive extensive performance testing before being installed in the second REH-30.

2.3.2.10.5 REH-30/100 Feed Pump

Fabrication of the first REH-30 feed pump has been completed. Hydrostatic testing of the pump receiver has been completed. Helium mass spectrometer leak testing will be conducted after final assembly of the pump has been made. The test stand for this pump has been assembled, and it has been checked out for functional performance.

The second REH-30 feed pump is approximately 30% complete. The first REH-100 feed pump is 50% complete, and the second REH-100 pump is approximately 30% complete.

ORIGINAL PAGE IS
OF POOR QUALITY

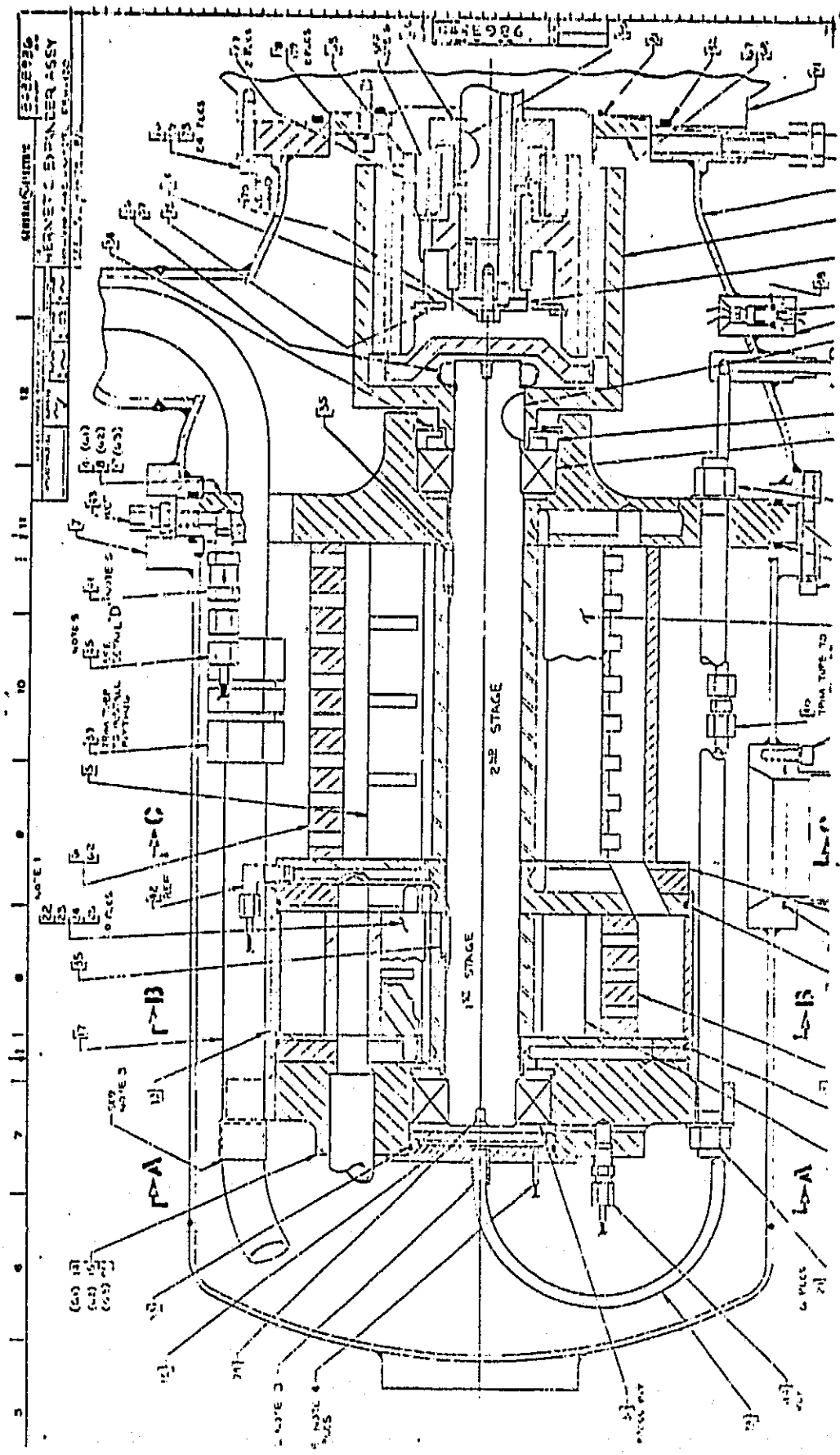

FIGURE 2-5. REH-100 COMPRESSOR/EXPANDER COUPLING INTERFACE

2.3.2.10.6 Heat Exchangers

A compact counter flow heat exchanger design has been selected for the REH-30/100 vapor generator. These units are very similar to the basic "Heliflow" design manufactured by Graham Manufacturing Co. Their industrial units were modified to reflect a more mass producible design approach - including lower weight, compactness and lower cost potential. Two vapor generators of each size are now being fabricated. Figure 2-6 shows the vapor generator configuration.

The selected design for the REH-30/100 regenerator is a single pass, counter-flow, straight tube and shell heat exchanger. FC-88 liquid is on the shell side for minimum liquid inventory. In order to meet performance and packaging constraints, the REH-30 regenerator has internal fins on the tube side, but the REH-100 regenerator has smooth walls on the tube side because packaging constraints were less demanding. Both regenerators are being fabricated by Dunham-Bush.

Rankine engine/heat pump fluid circuiting for the outdoor condenser coil has been defined for the REH-30. Fabrication of the first plate fin coil has been completed by the McQuay Group. The coil has been delivered to GE and is shown in Figure 2-7. The second REH-30 coil is 75% complete.

Layout design for the REH-100 condenser and fan system is 75% complete. Analysis of air flow and fluids circuitry for optimum heat transfer is also 75% complete. The REH-100 condenser has the same general configuration as the REH-30 condenser, except that it will be made into a U-shape by joining three separate flat slabs.

ORIGINAL PAGE IS
OF POOR QUALITY

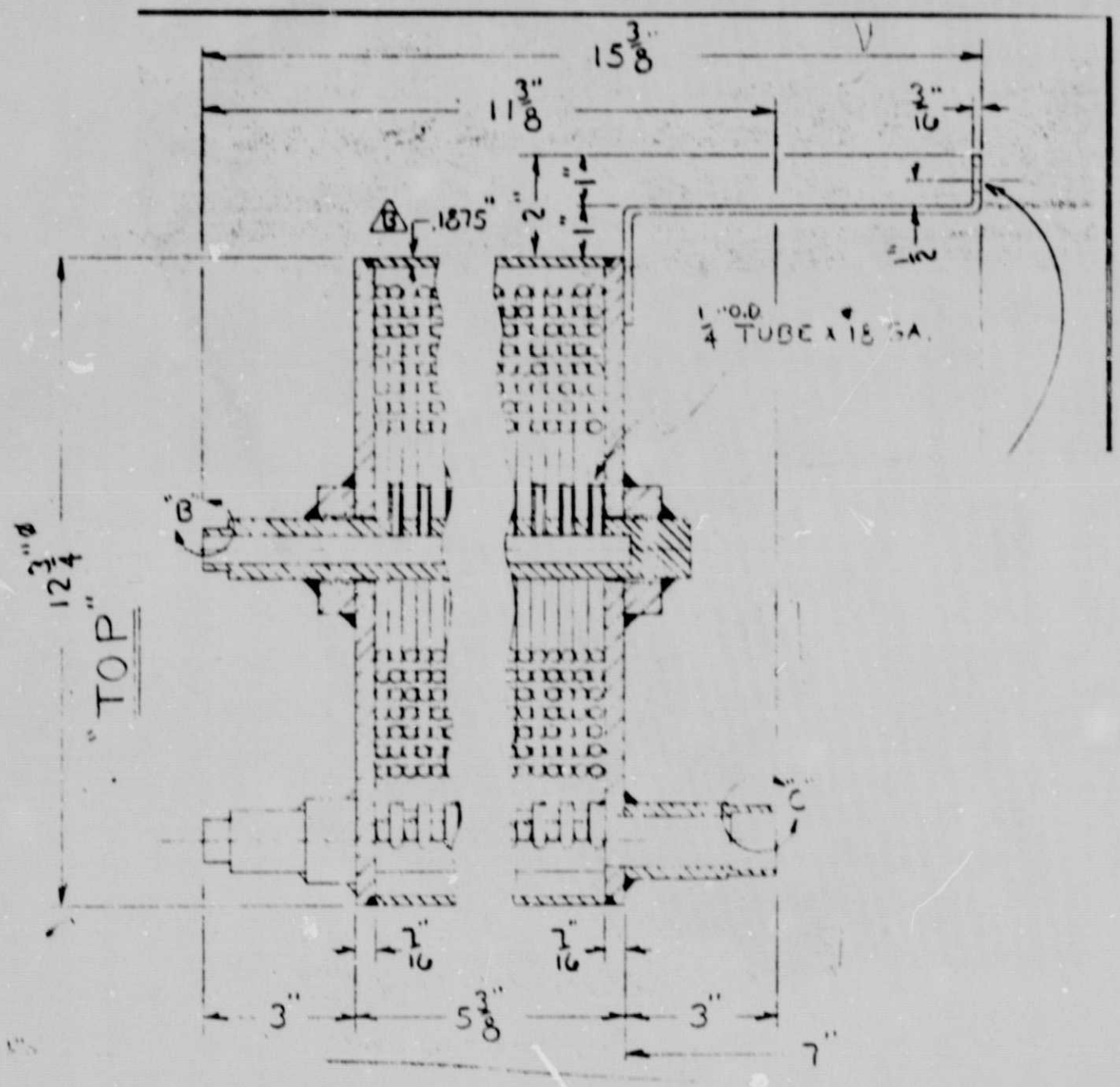

FIGURE 2-6. REH-30 VAPOR GENERATOR

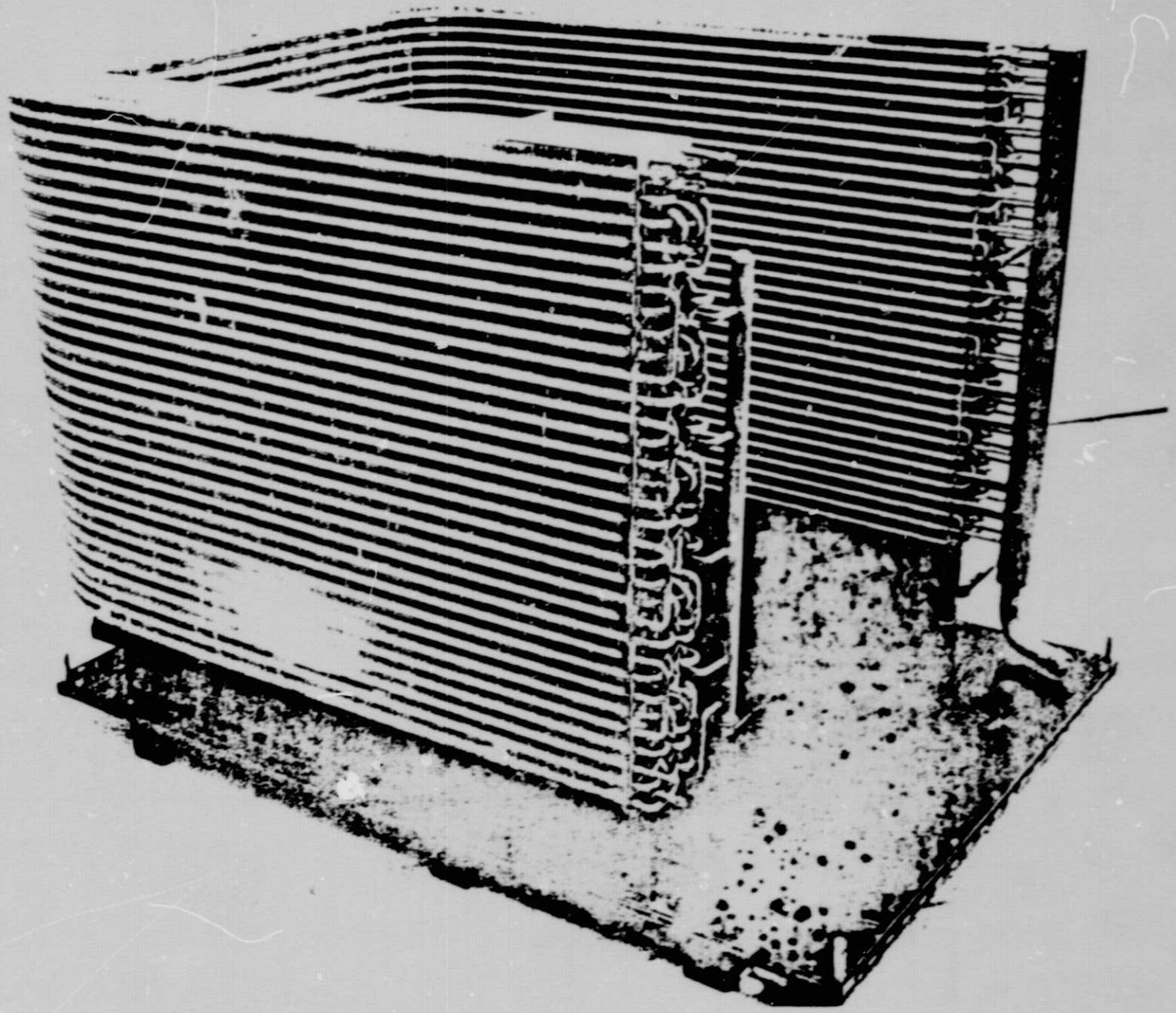

FIGURE 2-7. REH-30 RANKINE/HEAT PUMP CONDENSER

ORIGINAL PAGE IS
OF POOR QUALITY

2.3.2.10.5 Controls and Instrumentation

All control elements for the REH-30 have been identified. They are on order or being fabricated. An electro-thermally activated valve has been selected and tested for controlling liquid flowrate to the Rankine engine vapor generator. Fluid flow modulation was smooth and repeatable. The digital sequence control has been fabricated and bench tested. Only minor modifications need to be made.

The instrumentation schematic for the REH-30/100 has been completed. Pressure, temperature and flow requirements have been identified and orders have been placed for a majority of the required sensors.

2.3.2.10.6 Packaging

Design of the REH-30 outdoor unit was completed except for detail drawings of internal piping, insulation and wiring. Fabrication of appearance parts, the structural frame, the air flow system, and the condenser coil was completed for the first REH-30. These components were assembled as shown in Figure 2-8. The assemblage of these components was made for shipment to GE-ACOD, Tyler, Texas where all heat pump components are to be installed for performance testing.

Layout design of the REH-100 was initiated and the selected general overall appearance is shown in Figure 2-9.

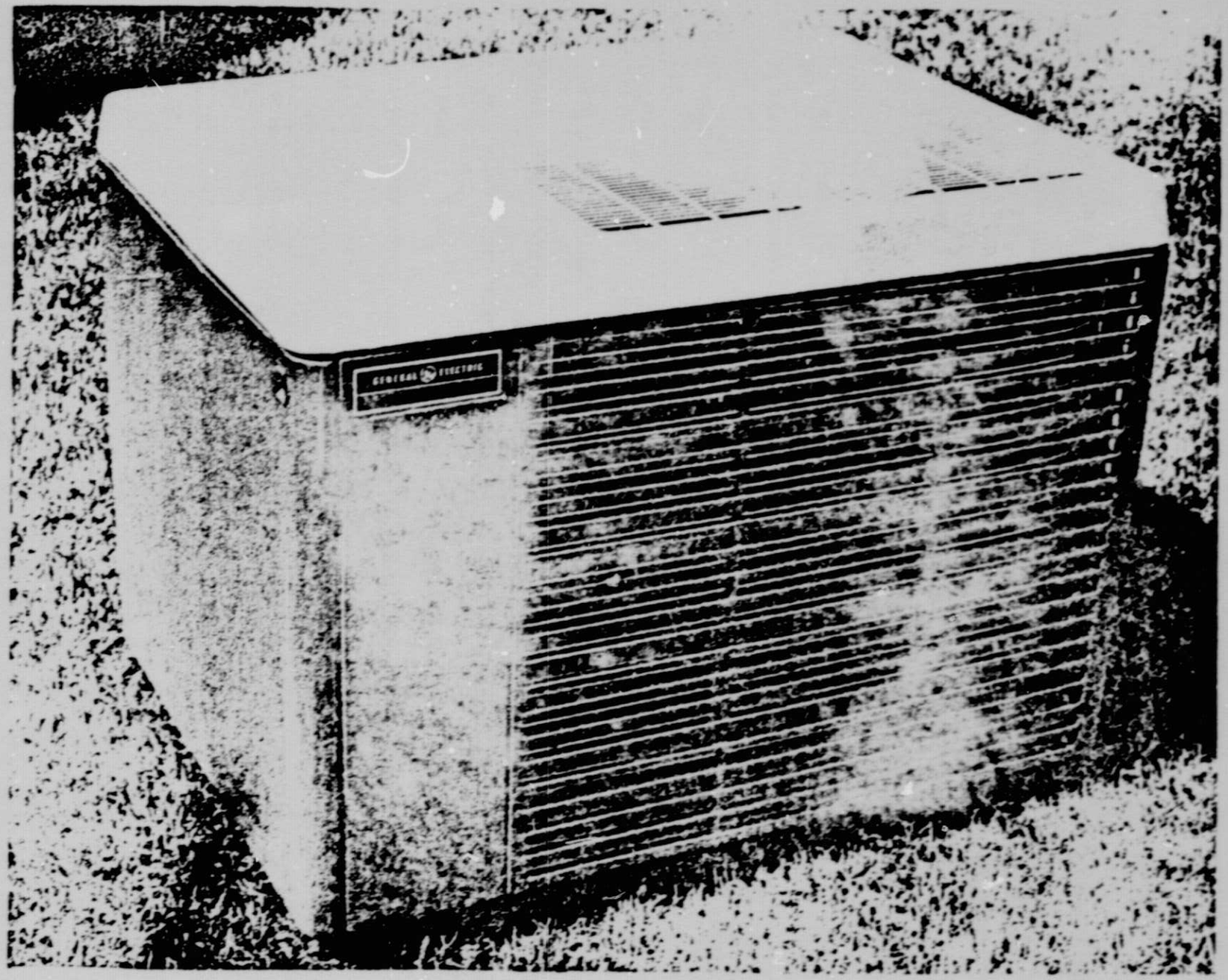

FIGURE 2-8. REH-30 OUTDOOR UNIT HARDWARE

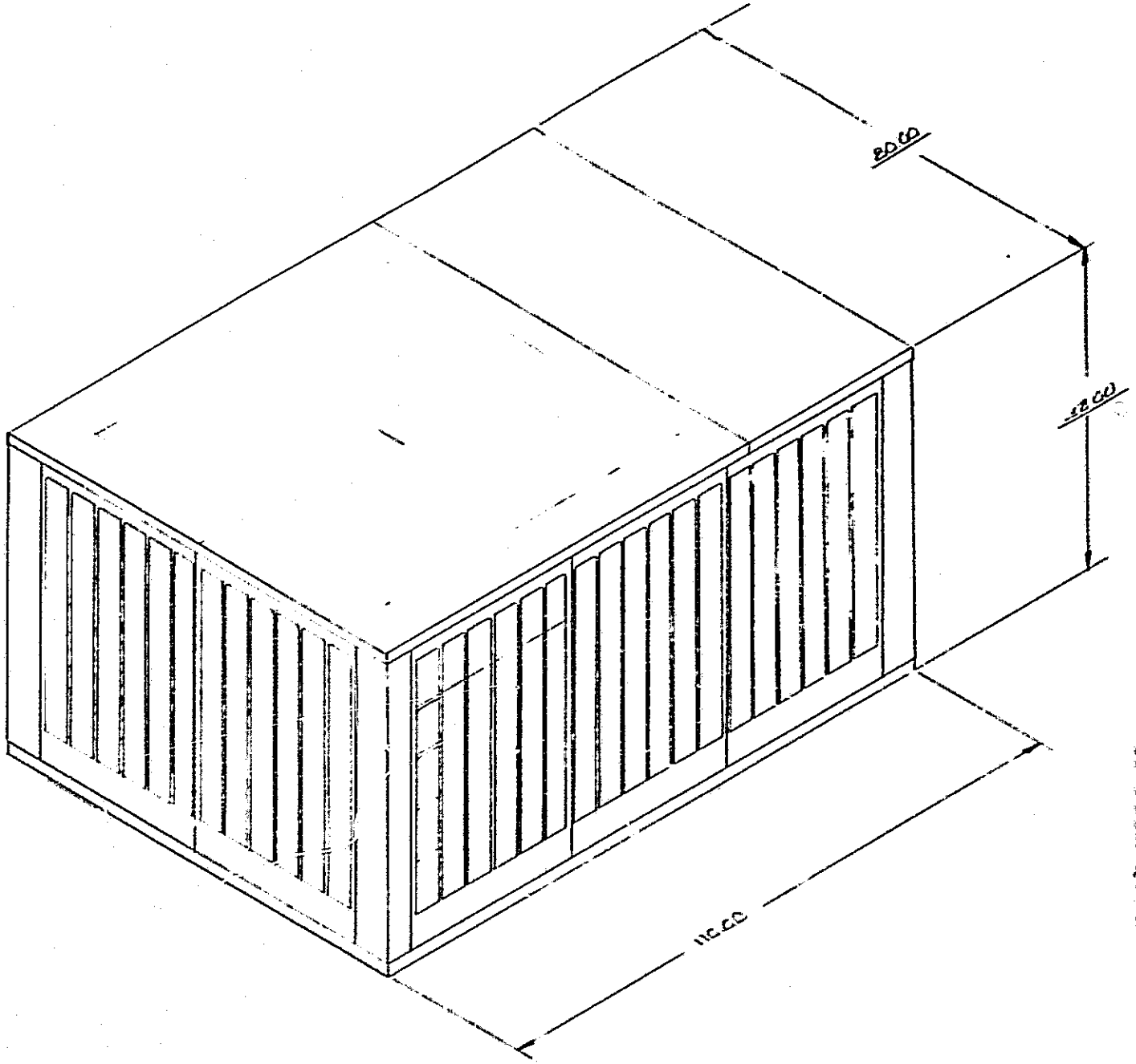

Figure 2-9. REH-100 OUTDOOR UNIT CONCEPT

ORIGINAL PAGE IS
OF POOR QUALITY

2.4 Test

2.4.1 Low Temperature Rankine Component Test Loops

Extensive testing of the three ton expander continued during this reporting period utilizing the operational "A"-Loop test facility. "Unattended Operation Mode", which provides automatic shutdown of an expander test in the event of a test facility or expander anomoly, continued to operate successfully and a similar mode will be incorporated into the new FC-88 expander test facility.

The test facility equipment is in-house and the mechanical and electrical work is proceeding to modify the 3-ton "B"-Test Loop to accommodate the new two-stage expander and FC-88 working fluid. Changes to the test loops include higher range temperature controls for the 150 KW simulated solar fluid source, higher range temperature and pressure sensors, a new vapor generator, and modified loop components, e.g., liquid separators, condensers and feed pumps. New mounting fixtures, and inlet and discharge piping interfaces were designed and fabricated for the 3-ton expander.

2.4.2 Pump Testing

The hermetic pump test stand, Figure 2-10, was constructed during the reporting period. The loop was operated using an open shaft pump to check-out and calibrate the test equipment. It is planned to test the first hermetic pump during the next reporting period using FC-88 working fluid.

2.4.3 Magnetic Drive Testing

Figure 2-11 shows the schematic for the magnetic drive test stand currently under construction. The basic stand is the 10-ton size expander stand configured for horizontal testing. Delivery of the hydraulic pump and hydraulic drive motor is expected June 30, 1978. The 0-200 inch/lb. torque meters were delivered mid-June, 1978. Completion of the test stand including check-out and calibration is scheduled for early July, 1978.

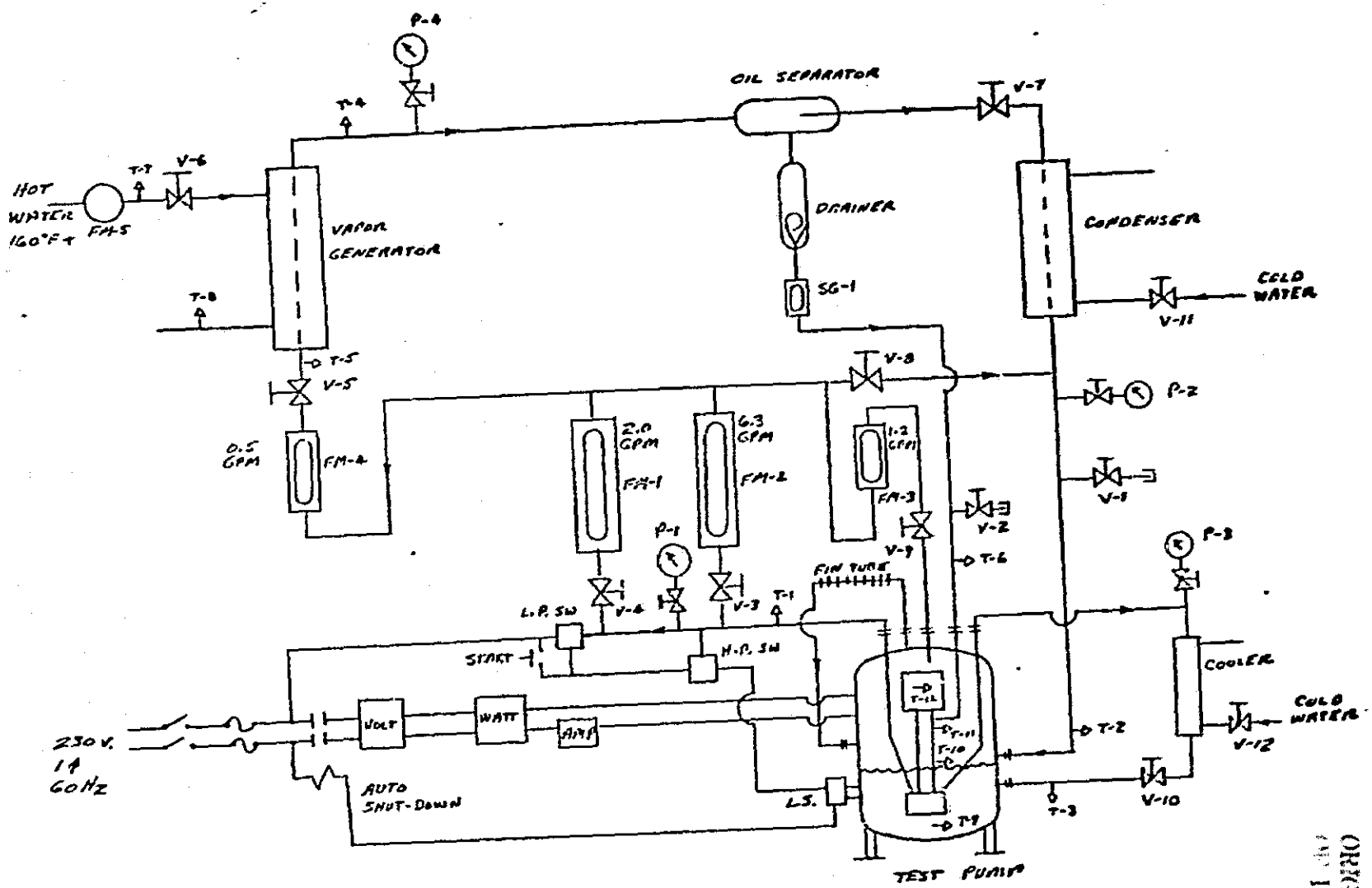

FIGURE 2-10. HERMETIC PUMP TEST STAND SCHEMATIC

ORIGINAL PAGE IS OF POOR QUALITY

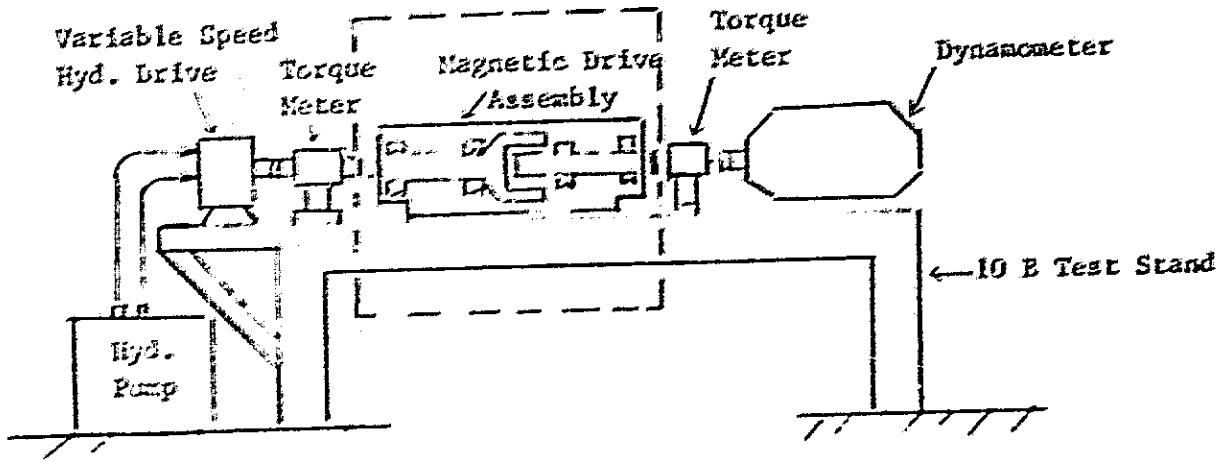

FIGURE 2-11. MAGNETIC DRIVE TEST STAND

SECTION 3

TASK 1.3 - DELIVERABLE HARDWARE

3.1 Normal, Ill.

The prime Solar Integrator was delivered to this site and installed the latter part of June. This activity completes delivery of all hardware.

3.2 Spokane, Wash.

All planned deliverable hardware for Spokane was delivered this quarter. A modification to the controls required some additional items to be shipped. They are: (1) reset controller with sensors (hand carry 7/17); (2) flow switch (ship 8/17) and the on-site monitor (ship 7/13).

3.3 Milwaukee, Wisc.

Hardware is on hold pending customer direction.

3.4 Ft. Meade, Md.

Hardware is on hold pending customer direction.

SECTION 4

TASK 1.4 - OPERATIONAL TEST SITES

4.1 SITE IDENTIFICATION

4.1.1 Fort Meade, Md. - HSF-1

Design activity was reinitiated for HSF-1, Ft. Meade, Md. An interface meeting was held on May 16, 1978 with the U.S. Army to agree on the design approach to the site. Hardware procurement has begun and all hardware will be available in late August. The construction bid package has been prepared for system installation and has been sent out for bid.

4.1.2 Milwaukee, Wisc. - HCOM-1

The Washington Park Community Center has been identified as a site. An interface meeting was held with the County of Milwuakee on June 9. The final site selection/go-ahead has to be determined by the Milwaukee County Board of Supervisors which meets on July 18, 1978. A system installation schedule has been developed to complete installation by 15 Nov. 1978.

4.1.3 Dallas Tex.

The Graduate Student House at SMU, Dallas, Tex. has been declared the first single family heating and cooling operational test site. An interface meeting was held on June 29, 1978 to discuss the site requirements.

A summary of the site candidates that have been visited is shown in Table 4-1. The status of the operational test sites is given in Table 4-2.

4.2 Site Installations

4.2.1 Normal, Ill. HSF-2 (OTS-32)

The site has been on line and operating for the quarter. The heat dump diverting valve, V4 has not been switching until the fluid temperature was above 135°F. A new motor driven valve has been installed; June 26, 1978, the system was checked out and is back on line. A prime Solar Integrator has been installed in place of the prototype unit. EP500 and EP600 power meters have been rewired in the furnace to correct their output.

During these time periods when V4 was operating properly, preliminary calculations showed system performance of 44% efficiency (insolation on collectors to net energy in the TES tank) under average insolation conditions of 200 BTU/hr/ft^2. This compares favorably with the predicted performance.

4.2.2 Spokane, Wash. HCOM-2 (OTS-36)

The Spokane system has been installed and checked out. Shrouds were installed in early June. The solar distribution system for pool heating has caused a pressure imbalance problem in the existing pool circulation system that results in contamination to be introduced into the pool.

Table 4-1. Sites Inspected by GE

Bldg. Type	General City	Site
HSF	Baltimore	7502 Your[illegible]., Ft. Meade, MD
HCOM	Muscle Shoals	TVA Office at Muscle Shoals, AL
HMF	Nashville	Airman's Quarters, AEDC, Tullahoma, TN
HSF	Peoria	Chanute Air Force Base
HSF	Peoria	MHA, Champaign, Illinois
HSF	Peoria	ISU House, Normal, Illinois
HMF	Schenectady	MHA, Schenectady, NY
HMF	Schenectady	VA Hospital Staff Housing, Albany, NY
HMF	Schenectady	Ely Park Housing, Binghamton, NY
HCMF	Chicago	Ft. Sheridan, ILL
HCMF	Chicago	Great Lakes Naval Training Center
HCOM	Madison	Hill Farm State Office Bldg., Madison, WI
HCOM	Milwaukee	Washington Park Senior Citizens Center
HCOM	Milwaukee	Washington Park Community Center
HCOM	Milwaukee	Dr. Martin Luther King Community Center
HCOM	Spokane	YWCA
HCOM	Spokane	East Washington State College
HCOM	Spokane	Community College
HCCOM	Los Angeles	West L.A. Municipal Building
HCCOM	Los Angeles	Department of Water & Power #1
HCCOM	Los Angeles	Department of Water & Power #2
HCCOM	Los Angeles	Peck Park Recreation Building
HCCOM	Los Angeles	Police Credit Union
HCSF	Dallas	President's Home, Univ. of Texas, Dallas
HCSF	Dallas	President's Home, N. Texas State, Denton, TX
HCSF	Dallas	Grad Student Housing at SMU
HCSF	Philadelphia	Visitor's Center, Valley Forge National Park
HCSF	Philadelphia	Rental House, Valley Forge National Park
HCSF	Philadelphia	Ampitheatre, Valley Forge National Park
HCSF	Philadelphia	Storage Barn, Valley Forge National Park

Table 4-2. Operational Test Site Status (4/30/78)

Type	Site No.	Location	Date Accepted By GE	Comments
HSF-1		Ft. Meade, Maryland	Jan. 19, 1977	Reinitiated April, 1978
HSF-2	OTS-32	Normal, Illinois	Feb. 7, 1977	
HMF		Tullahoma, Tennessee	Feb. 7, 1977	Multi-family units dropped from program verbally on April 4 and documented in minutes of April 4 meeting.
HCOM		Muscle Shoals, Alabama	Jan. 19, 1977	Converted to Heating and Cooling Site on 4/20/77*
HCOM-1		Milwaukee, Wisconsin	May 23, 1977	Boathouse in MLK identified as new site ≈5/24.
HCOM-2	OTS-36	Spokane, Washington	July 1, 1977	
HCSF-1		Dallas, Texas		SMU House recommended by NASA on 8/15/77
HCSF-1		Philadelphia, PA		
HCCOM-2		Muscle Shoals, Alabama	April 20, 1977	
HCCOM-2		Open		

* Design activity was on hold pending this decision

Note: Great Lakes, Ill. was accepted as a HCMF site on 2/7/77. All multi-family sites have been dropped from the program.

ORIGINAL PAGE IS OF POOR QUALITY

This problem will be corrected by removing valves V6 and V7 from the system and placing the solar pool heat exchanger (HX3) and the pool heating convector in series. This change will eliminate all pressure pulses in the pool circulation loop. In conjunction with this change, a pneumatic valve will be added to the pneumatic system to the existing steam control valves to interlock the control systems. The outdoor reset (CT3) was determined to be inadequate for its intended use and components for a new design is on order and will be installed when received. A new more sensitive flow switch is on order and will replace the existing one when received.

☆ U.S. GOVERNMENT PRINTING OFFICE 1978—640-081/275 REGION NO'4