(NASA-CR-157625) PRELIMINARY POWER TRAIN DESIGN FOR A STATE-OF-THE-ART ELECTRIC VEHICLE (EXECUTIVE SUMMARY) (Booz-Allen and Hamilton, Inc.) 119 p HC A09/MF A01 CSCL 13F G3/85

N79-12968

Unclas 15303

BOOZ, ALLEN & HAMILTON Inc.
DESIGN and DEVELOPMENT

PRELIMINARY POWER TRAIN DESIGN FOR A STATE-OF-THE-ART ELECTRIC VEHICLE

NATIONAL AERONAUTICS AND SPACE ADMINISTRATION
LEWIS RESEARCH CENTER

CONTRACT NAS3-20595

PART OF THE UNITED STATES
ENERGY RESEARCH AND DEVELOPMENT
ADMINISTRATION
DIVISION OF TRANSPORTATION ENERGY CONSERVATION
ELECTRIC AND HYBRID VEHICLE SYSTEMS PROGRAM

RECEIVED
NASA STI FACILITY
JAN 1979

DRA
11/77
RO 12-77
2-78
4-78
6-78
8-78

BOOZ, ALLEN & HAMILTON Inc.
DESIGN and DEVELOPMENT

PRELIMINARY POWER TRAIN DESIGN FOR A STATE-OF-THE-ART ELECTRIC VEHICLE

NATIONAL AERONAUTICS AND SPACE ADMINISTRATION
LEWIS RESEARCH CENTER

CONTRACT NAS3-20595

PART OF THE UNITED STATES
ENERGY RESEARCH AND DEVELOPMENT
ADMINISTRATION
DIVISION OF TRANSPORTATION ENERGY CONSERVATION
ELECTRIC AND HYBRID VEHICLE SYSTEMS PROGRAM

EXECUTIVE SUMMARY

I. INTRODUCTION

- THE PRELIMINARY DESIGN OF A STATE-OF-THE-ART ELECTRIC VEHICLE POWER TRAIN IS PART OF A NATIONAL EFFORT TO REAP THE POTENTIAL BENEFIT OF USEFUL URBAN ELECTRIC PASSENGER VEHICLES.

- THE OBJECTIVES OF THE PROGRAM FOCUSED ON STATE-OF-THE-ART ELECTRIC VEHICLES AND COMPONENTS.

- THE METHODOLOGY FOR THE POWER TRAIN STUDY COMBINED LITERATURE SEARCH, ENGINEERING JUDGMENT AND COMPUTER AIDED ANALYSIS.

II. ASSESSMENT OF THE STATE-OF-THE-ART IN ELECTRIC VEHICLE TECHNOLOGY

- THE MOST COMMON APPROACH TAKEN IN THE DESIGN OF AN ELECTRIC VEHICLE POWER TRAIN HAS BEEN TO CONVERT A CONVENTIONAL INTERNAL COMBUSTION ENGINE VEHICLE CHASSIS TO ELECTRIC DRIVE.

  - Many Hobbyists Have Built Electric Vehicles In This Country.

  - Electric Vehicle Technology Is More Advanced In Foreign Countries.

  - By Designing From The "Ground Up", Improved Performance Has Been Obtained In Several Experimental Research Vehicles.

- DC MOTORS AND CONTROLLERS REPRESENT A MATURE TECHNOLOGY WHICH IS WELL SUITED TO THE ON-THE-ROAD, ELECTRIC VEHICLE APPLICATION.

- THE MECHANICAL PORTION OF AN ELECTRIC VEHICLE POWER TRAIN SERVES TO MATCH THE OUTPUT OF THE MOTOR TO THE LOAD REQUIRED AT THE VEHICLE WHEELS.

  - Mechanical Transmissions Generally Sacrifice Efficiency For the Flexibility of Automatic Ratio Change.

  - The Radial Tire Represents the State-of-the-Art Tire For an Electric Vehicle.

- COMPONENTS WHICH REPRESENT THE CURRENT STATE-OF-THE-ART INCLUDE THE SERIES DC MOTOR, CHOPPER CONTROLLER AND RADIAL TIRES.

  - The Rear Mounted Motor/Transaxle Or The Front Wheel Drive Are Preferred Power Train Architectures.

  - The Selection of an Optimum Power Train Requires a Systems Analysis of the Hardware Operating Over the Drive Cycle.

TYPICAL VEHICLE CONFIGURATION

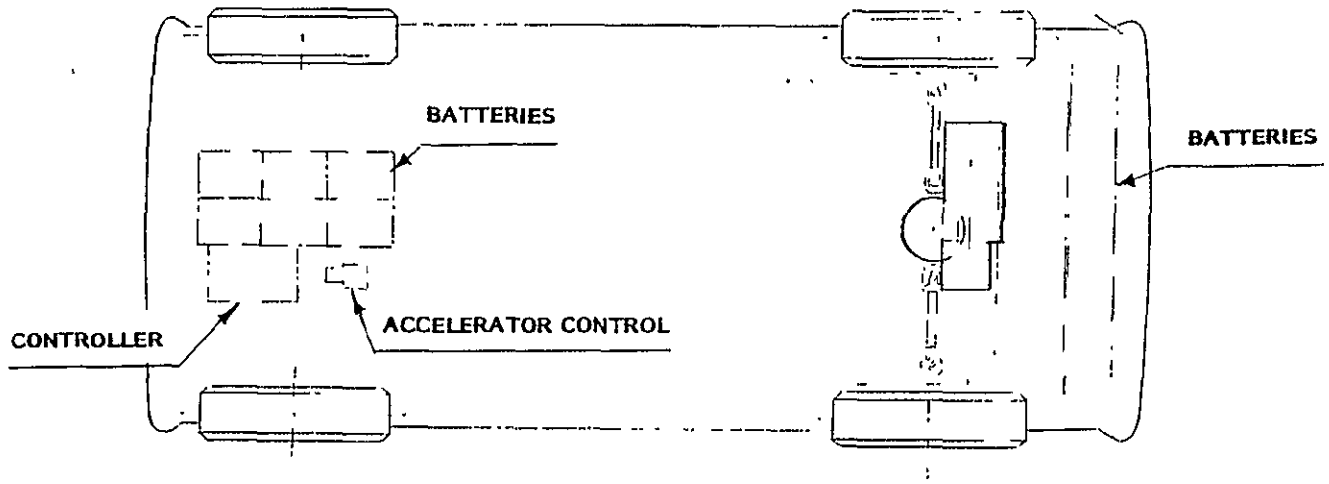

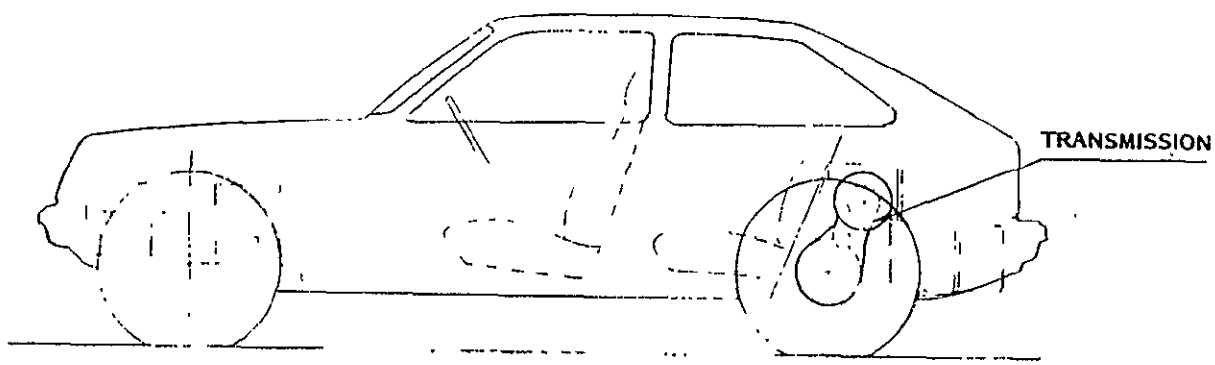

Source: Booz, Allen & Hamilton Inc.

ORIGINAL PAGE IS
OF POOR QUALITY

III. STATE-OF-THE-ART POWER TRAIN DESIGN

- THE CALCULATION OF RANGE PROCEEDS BY ACCOUNTING FOR THE ENERGY CONSUMED BY THE COMPONENTS AND THEN DRAWN FROM THE BATTERIES AS THE VEHICLE OPERATES OVER A DRIVING CYCLE.

- ANALYSES SERVED TO ESTABLISH THE MAXIMUM POTENTIAL RANGE, THE SENSITIVITY OF RANGE TO THE COMPONENT PARAMETERS AND TO SIZE THE COMPONENTS.

  - An ideal, 3,600 Pound Vehicle Can Achieve a Range of 50 Miles Over the SAE J227a/D Driving Cycle and 75 Miles at a Constant 55 MPH.

  - Lighter Weight Vehicles, Lower Tire Rolling Resistance and the Use of Regenerative Braking Are Most Effective in Extending Range.

  - A Motor Rated at 24 Horsepower Is Required for the Electric Vehicle Power Train.

- THE STATE-OF-THE-ART POWER TRAIN CONSISTS OF A DC SERIES WOUND MOTOR, SCR CONTROLLER, V-BELT TRANSMISSION, LOW-LOSS DIFFERENTIAL AND RADIAL TIRES.

The State-Of-The-Art Power Train Installed in an Electric Vehicle Could Achieve a Range of 36 Miles Over the SAE J227a/D Driving Cycle.

DRIVE TRAIN UTILIZING THE "V" BELT TRANSMISSION

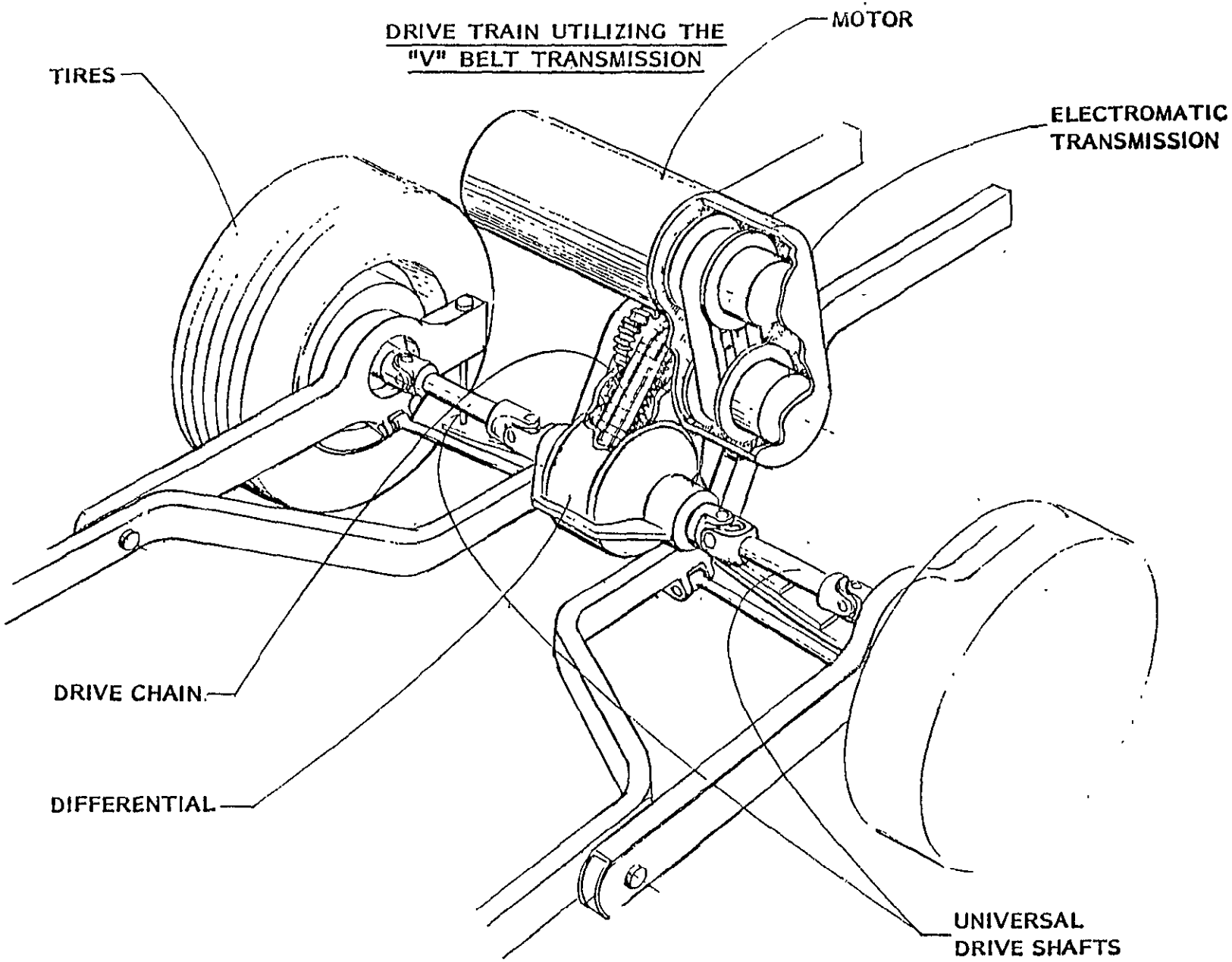

ORIGINAL PAGE IS OF POOR QUALITY

IV. IMPROVED POWER TRAINS

- BY APPLYING NEAR-TERM ADVANCES IN TECHNOLOGY, AN IMPROVED POWER TRAIN DESIGN WILL INCREASE VEHICLE RANGE.

- THE USE OF A SEPARATELY EXCITED DC MOTOR, AS COMPARED TO A SERIES MACHINE, CAN IMPROVE THE RANGE OF AN ELECTRIC VEHICLE.

  - Analysis Predicts That the Range of an Electric Vehicle With a Separately Excited Motor is 20% Greater Than the Comparable Series Motor Design.

- SEVERAL OTHER IMPROVEMENTS WILL LEAD TO FEATURES WHICH WILL ENHANCE THE SUCCESS OF THE ELECTRIC VEHICLE.

ELECTROMAGNETIC TRANSMISSION

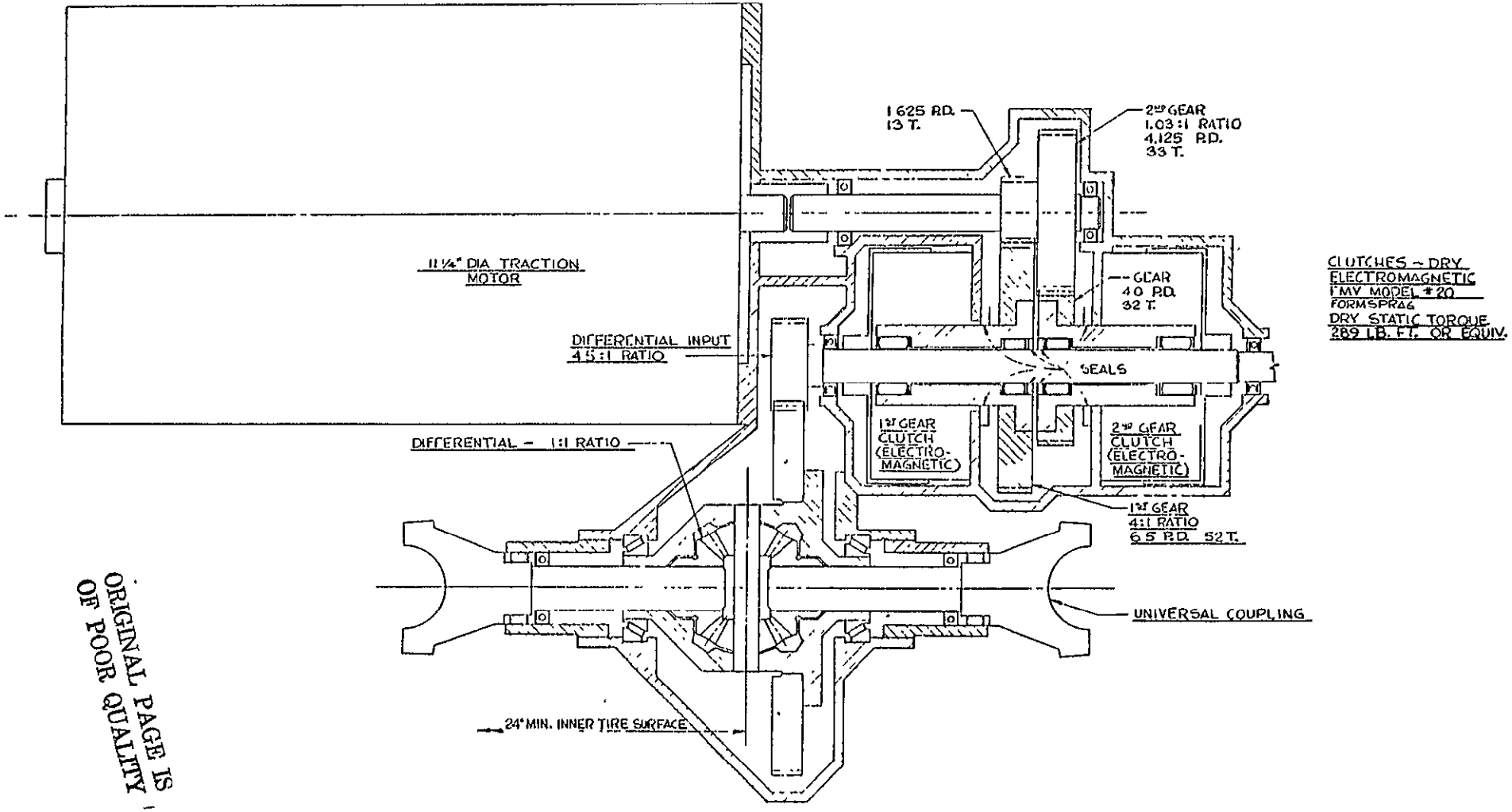

ORIGINAL PAGE IS
OF POOR QUALITY

V. SUMMARY AND RECOMMENDATIONS

- STATE-OF-THE-ART ELECTRIC VEHICLES ARE PRIMARILY CONVERSIONS WITH A HANDFUL OF ORIGINAL DESIGNS.

- THE MAJOR ELEMENTS OF THE PRELIMINARY POWER TRAIN DESIGN DEVELOPED IN THIS STUDY ARE A DC SERIES MOTOR, SCR CONTROLLER AND V-BELT CVT.

- IMPROVEMENTS STUDIED IN DETAIL INCLUDE THE USE OF SEPARATELY EXCITED MOTORS AND AN ELECTROMAGNETIC TRANSMISSION.

- FUTURE WORK SHOULD EMPHASIZE NEAR TERM TECHNICAL ADVANCES TO BRING A PRACTICAL ELECTRIC VEHICLE CLOSER TO REALITY.

  - Better Batteries, Expanded Use of Light Weight Materials and Low Rolling Resistance Tire Designs Are the Areas With the Major Potential for Improved Range.

  - Further Development of High Speed DC Motors and Electronic Control Packages Will Enhance the Potential for "All Electric" Drives.

  - The Electromatic CVT and the Electromagnetically Shifted Transmission Should Be Applied To Vehicle Power Trains To Demonstrate Their Reliability in the Field.

DETAILED PRESENTATION

DETAILED PRESENTATION

I. INTRODUCTION

II. ASSESSMENT OF THE STATE-OF-THE-ART IN ELECTRIC VEHICLE TECHNOLOGY

III. STATE-OF-THE-ART POWER TRAIN DESIGN

IV. IMPROVED POWER TRAIN

V. SUMMARY AND RECOMMENDATIONS

I. INTRODUCTON

I. INTRODUCTION

1. THE PRELIMINARY DESIGN OF A STATE-OF-THE-ART ELECTRIC VEHICLE POWER TRAIN IS PART OF A NATIONAL EFFORT TO REAP THE POTENTIAL BENEFIT OF USEFUL URBAN ELECTRIC PASSENGER VEHICLES.

   (1) Over One Half of the Nation's Air Pollution Is Associated With Gasoline Powered Automobiles.

   (2) An Electric Vehicle Moves the Energy Conversion Back To the Central Power Plant, Thereby Controlling Pollution and Reducing the Consumption of Petroleum.

   (3) Studies Have Shown That a Useful Electric Vehicle With a Range of 80 - 100 Miles Would Meet the Requirements for a Second Car.

2. THE OBJECTIVES OF THE PROGRAM FOCUSED ON STATE-OF-THE-ART ELECTRIC VEHICLES AND COMPONENTS.

   (1) Identify and Evaluate the State-Of-The-Art of Electric Vehicles and Electric Vehicle Power Train Components.

   (2) Develop a Power Train Design Using State-Of-The-Art Components.

   (3) Identify and Evaluate the Benefit of Potential, Near-Term Improvements To the State-Of-The-Art Electric Vehicle Power Train.

3. THE METHODOLOGY FOR THE POWER TRAIN STUDY COMBINED LITERATURE SEARCH, ENGINEERING JUDGMENT AND COMPUTER AIDED ANALYSIS.

(1) Information Was Obtained by Literature Search, In Person and Telephone Interviews and Mailings To Manufacturers of Vehicles and Components.

(2) Conceptual Approaches To Electric Vehicle Design Were Identified and Studied.

(3) Analyses of Parameter Sensitivity, Idealized Performance and Range Over a Driving Cycle Guided the State-Of-The-Art Design.

(4) Engineering Design Study and Computer Aided Analyses Were Used To Evaluate Potential Improvements in Power Train Performance.

BASIC POWER TRAIN

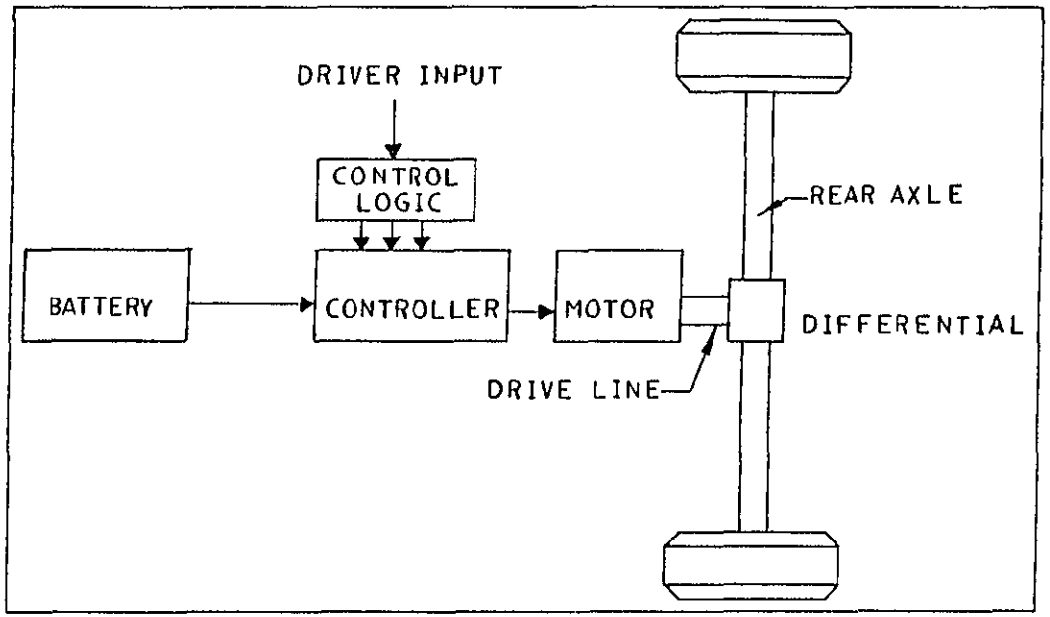

II. ASSESSMENT OF THE STATE-OF-THE-ART IN ELECTRIC VEHICLE TECHNOLOGY

1. THE MOST COMMON APPROACH TAKEN IN THE DESIGN OF AN ELECTRIC VEHICLE POWER TRAIN HAS BEEN TO CONVERT A CONVENTIONAL INTERNAL COMBUSTION ENGINE VEHICLE CHASSIS TO ELECTRIC DRIVE.

   (1) Many Hobbyists Have Built Electric Vehicles In This Country.

   (2) The Conversion Approach Has Been Employed In Several Professional Electric Vehicle Designs.

DOMESTIC ELECTRIC VEHICLES

VEHICLE (Date)	TYPE/ CURB WEIGHT	BATTERIES	MOTOR	CONTROLLER	TRANSMISSION	DIFFERENTIAL	TIRES	BRAKES	PERFORMANCE	REFERENCE
GM Electrovair II (1967)	Corvair, 5 passenger 3400 lbs.	Silver-zinc 530 V. 60Ah	Delco, 4 pole, 3 phase AC induction, 130 lbs , 115 HP at 13,000 RPM, oil cooled.	Three Phase SCR, Oil Cooled.	Fixed gear reduction.	Standard			80 mph max 0-60/17 sec 40 - 70 mi range	(147)
GM XEP Opel (1970)	4 passenger 3000 lbs.	Zinc-air and Lead-acid	Two DC series in parallel, rear mount. 128 lbs , 28 HP each Blower cooled	Two synchronized SCR	Dual input gearbox	Standard 3.89 1			60 mph max 0-30/10 sec. 7, 80 mi. range	(63)
Ford Cortina Estate Wagon	5 passenger 3086 lbs	Nickel-cadmium 110 V., 900 lbs	GE DC series, 150 lbs , 40 HP, 100 V , 26 ft. lbs , 8000 rpm Fan cooled (60 watt)	SCR and bypass contactor	Front wheel drive, standard manual, 3 12 1 in second	3.9.1	Radial		77 mph max (3rd gear), 40 mi at 25 mph	(33)
Boeing LRV	Rail	Pantograph	2 in series, DC separately excited, 210 HP Blower cooled.	SCR armature chopper	Fixed gear reduction			Dynamic (regenerative optional) and hydraulic disc.		(155)
EVA Metro	Renault R-12 4 passenger 3150 lbs	Lead-acid, EV-106 96 V , 1040 lbs.	DC series 13 4 HP 4500 RPM Fan Cooled	SCR, no bypass, 340 amp limit.	Torque converter and 3 speed Renault automatic.	2.34 1	Radial 155 R-13 32 psi		50 mph max , 56 mi at 25 mph 27 mi during urban cycle	(152), (161), (162)
EVA Contactor (1977)	4 passenger AMC Pacer		DC shunt 8 HP	HB contactor	Automatic					(163)
Battronic Minivan (1973)	Van 5800 lbs.	Lead-acid 112 V 330 Ah	GE DC series 54 V., 42 HP, 6000 rpm	GE SCR chopper, field weakening bypass contactor, current limit	2 speed, helical gear rear axle 1 96, 1.0 1	Hypoid differential 3 07 1	6.70 x 15	Hydraulic	60 mph max , 60 mi. at 20 mph.	(168)

ORIGINAL PAGE IS OF POOR QUALITY

DOMESTIC ELECTRIC VEHICLES

VEHICLE (Date)	TYPE/ CURB WEIGHT	BATTERIES	MOTOR	CONTROLLER	TRANSMISSION	DIFFERENTIAL	TIRES	BRAKES	PERFORMANCE	REFERENCE
Waterman CHW-886	4 passenger 2480 lbs.	Lead acid, 48V	Prestolite, DC series 12 HP	Contactor, 3 speed	Infinitely variable belt transmission			Regenerative available	45 mph max 60 mi at 30 mph	(160)
Jet Industries Electra-Van	Subaru Van 2500 lbs.	Lead-acid, EV-106 96 V., 910 lbs.	Baldor, DC series, 10 HP, 3500 rpm, 168 lbs Blower cooled.	Cableform SCR	Standard	Standard	Bridgestone K663, bias ply 40 psi	Hydraulic	45 mph max 40 mi at 40 mph	(152)
Dana Electric Van	Van 8080 lbs.	Lead-acid 144 V 328 Ah/5 hr	Reliance, DC shunt, 120 V, 53 HP at 4250 rpm, 830 lbs	Reliance, SCR chopper, 300 lbs	3 speed, clutch standard manual 3 03, 1.75, 1.0 1	Dana 7.17 1		Regenerative and hydraulic	50 mph max , 200 mi at 25 mph	(156)
AM General Electruck DJ-5E (1975)	Van/Jeep 3640 lbs	Lead-acid 54 V., 1250 lbs.	DC compound, 283 lbs.	SCR blower cooled 110 lbs	No transmission, conventional shaft with universals	5 89 1	CR 78-15 (Range G)	Regenerative over 15 mph and hydraulic drum	45 mi at 30 mph, 0-30/26 sec., 30 mi. on cycle	(27), (164)
Otis P-500	Van 3900 lbs.	Lead-acid, 96 V, EV-106, 1640 lbs.	Otis, DC series 30 HP, 4000 rpm, Blower cooled.	GE pulse type, SCR, 96 V blower cooled	None, conventional shaft with universals	Standard 5.17 1	Uniroyal Rally 180, 6 ply radial, 175-SR-13, 32 psi.	Hydraulic	0-30/12 sec., 21 mi on cycle	(27), (152)
Sebring/Vanguard Citicar (1974)	2 passenger 1300 lbs	Lead-acid, 48 V	GE, DC series rear mounted, 6 HP, 4100 rpm,	Contactor and starting resistor	No transmission	6.83 1	Goodyear, 2 ply nylon, 4 80x12, 50 psi	Disc/drum hydraulic	35 mph max 36 mi at 25 mph. 20 mi. on cycle	(165), (166)
GM Delta (1971)		Lead acid and nickel cadmium							180 mi at 20 mph 80 mi at 40 mph	(14)
Linear Alpha (1974)	Dodge Van 5950 lbs	Lead-acid (24) 220 Ah, 144 V, 1433 lbs.	3-phase AC induction, 36 HP.		Direct 1.6 1	Standard		Regenerative and hydraulic		(135)
EFP Mars II (1964)	4 passenger Renault R-10 4100 lbs	Lead acid 120 V 1840 lbs	DC series	Contactor			Goodyear radial	Regerative, 4-wheel disc.	125 mi at 30 mph 22 mi on cycle	(46)

ORIGINAL PAGE IS OF POOR QUALITY

(3) Electric Vehicle Technology Is More Advanced In Foreign Countries.

FOREIGN ELECTRICAL VEHICLES

VEHICLE (Date)	TYPE/ CURB WEIGHT	BATTERIES	MOTOR	CONTROLLER	TRANSMISSION	DIFFERENTIAL	TIRES	BRAKES	PERFORMANCE	REFERENCE
Thev II Taiwan	4 passenger 2654 lbs	Lead-acid 192 V, 1102 lbs	Tongyuan, DC series, rear mount 176 lbs., 44 HP, 6000 rpm, Blower cooled	SCR chopper	Fixed reduction 1.6 1	Standard differential 4 1.1			56 mph max, 0 - 37/12 sec. 200 mi at 30 mph	(90)
Lucas Taxi (1976)	4851 lbs.	Lead-acid 216 V	DC series, front mount transverse, CAV, 50 HP	Lucas SCR chopper	Double reduction, Morse Hy Vo chain, transverse to differential	5 63 1		Regenerative and Girling servo hydraulic brakes.	60 mph max 200 mi at 30 mph	(55)
Daihatsu Kogyo Lightweight car (1972)	4 passenger 2010 lbs.	Lead-acid, 98 V, 220 Ah/5 hr.	Two rear wheel, DC series, 7 5 HP each, 45 V,	SCR chopper	Rear mounted, automatic, 2-speed			Regenerative and hydraulic.	55 mph max., 0-20/3 sec. 175 mi at 25 mph.	(98), (153)
Toyota Compact car (1972)	5 passenger 3054 lbs.	Lead-acid, 192 V 158.5 Ah/5 hr	DC separately excited 27 HP, (20 kw) rated 54 hp. (40 kw) max. Blower cooled	SCR chopper, automatic field weakening	Rear transverse mount, automatic, torsional damper, no fluid coupling, 3-speed hydraulic from electric pump		Special	Regenerative and hydraulic.	58 mph max , 0-20/2 5 sec. 180 mi. at 25 mph	(67), (98), (153)
Toyota Small Truck	2 passenger + 770 lbs load	Lead-acid, 96 V , 135 Ah/5 hr., 723 lbs.	DC separately excited 13 HP, rated, 18 HP max.	SCR	Fixed gear reduction			Regenerative and hydraulic.	38 mph max., 26 mi. over urban cycle.	(67), (153)
Enfield 8000 (1976)	2 passenger + 2 children 2100 lbs.		DC series, 48 V, Mawdsley, 8 HP., 175 lbs Blower cooled.	6 step contractor, field weakening	Optional	3 55 1	Radial, 35 psi		0-30/12 sec. 40 mph max	(142)
Bedford Van ERC England	Van 6000 lbs	120 V	DC series, 50 HP.	5 step contactor (patented)	Torque converter, Variable Kinetic Drive, 4.5 at stall, 90% cruise efficiency				0-30/14 sec 47 mph max. 33 mi. over cycle	(47)

ORIGINAL PAGE IS OF POOR QUALITY

FOREIGN ELECTRICAL VEHICLES

VEHICLE (Date)	TYPE/ CURB WEIGHT	BATTERIES	MOTOR	CONTROLLER	TRANSMISSION	DIFFERENTIAL	TIRES	BRAKES	PERFORMANCE	REFERENCE
Ford Comuta England (1968)	2 passenger + 2 children 1200 lbs.	Lead-acid (4) 12 V 120 Ah/5 hr. 384 lbs.	CAV type TM 55, DC series (2), 24 V , 5 HP Blower cooled.	Thyristor pulse controller, Sevcon Mk VI, bypass contactor.	Rear transverse mount fixed gear reduction	Overall ratio 4.0 1, helical pinion	4.4 x 10	Hydraulic drums all wheels	40 mph max 40 mi. at 25 mph 0-30/12 sec	(92)
VW Electric Transporter	Van 5000 lbs approx.	Lead-acid 144 V. 150 Ah/5 hr. 1896 lbs.	DC separately excited, Bosch and Siemens, 21 HP (42 peak), 6700 rpm max, Separate fan	Electronic, pulse width and frequency modulation.	Fixed gear, VW Standard transaxle		Radial	Regenerative and hydraulic.		(2), (3)
Damler Benz LE 306	Van 6500 lbs. approx.	Lead-acid 180 V 180 Ah/5 hr 1234 lbs.	DC Separately excited, 42 HP (70 peak), 6000 rpm max.	Electronic, 2 position variable pulse width and frequency	Fixed gear reduction	Standard		Regenerative and hydraulic.	47 mph max.	(3), (51)
Elcar Model 4000 (1975)	4 passenger 1500 lbs.	Lead-acid 48 V, 300 Ah	DC series, OE, 3.5 HP., Rear mount.	SCR chopper with contactors and resistor.	Fixed reduction		Steel Radial SR-145x10	Hydraulic.	45 mi at 35 mph 40 mi at 40 mph 0-30/14 sec	(158)
SRF Combi-Truck Israel	2 passenger van 2800 kg.	Varta, MD 750-V3 144 V.	DC separately excited, 25 HP, continuous at 4500 rpm., GE.	No armature control, field weakening	Front wheel drive, continuously variable transmission, flywheel				43 mph max.	(159)

ORIGINAL PAGE IS OF POOR QUALITY

(4) By Designing From The "Ground Up", Improved Performance Has Been Obtained In Several Experimental Research Vehicles.

NONCONVERSION ELECTRIC VEHICLES

VEHICLE (Date)	TYPE/ CURB WEIGHT	BATTERIES	MOTOR	CONTROLLER	TRANSMISSION	DIFFERENTIAL	TIRES	BRAKES	PERFORMANCE	REFERENCE
GM 512 (1969)	2 passenger	Lead-acid, 84 V, 328 lbs.	DC series, 50 lbs , 8.5 HP , 4000 rpm, Blower cooled	SCR	Coaxial motor, planetary gear and differential at rear axle.	5 0.1 overall ratio.			45 mph max. 0-30/12 sec. 100 mi at 34 mph.	(49)
Copper Development Association Van III (1970)	Van 5100 lbs	Lead-acid, 108 V	GE, DC series & interpoles 12 HP at 4725 rpm, 231 lbs.	SCR, 500 amp and bypass contactor	Chrysler 3-speed automatic. 15.14, 9.33, 6 30: 1 overall ratios No torque converter	Front wheel drive Morse Hy-Vo chain to differential.	Firestone radial	Hydraulic		(35)
Copper Development Association Town Car (1976)	2 passenger 2952 lbs.	Lead-acid, 108 V.	DC separately excited, 40 HP. max.	4 6·1 field variation by transistor chopper. Armature resistance switching	Front wheel drive, standard toothed belt and spiral bevel gear.	4 95 1	AR 70-13 radial.		60 mph max. 0 - 20/11.2 sec.	(6), (105), (152)
ESB/McKee Sundancer - 2 (1972)	2 Passenger 1600 lbs.	Lead-acid 72 V., 750 lbs.	Tork link, DC series, 8/17 HP.	SCR chopper, 400 amp	Rear transaxle and motor McKee 2-speed 6 08, 3 14 1, manual	Dana EG-20	Goodyear low rolling resistance 6.55 x 9, 30 psi.	Disc/drum hydraulic	100 mi. at 30 mph, 45 mi at 60 mph	(94)
Amectran EXAR-1	4 Passenger 2800 lbs	Lead-acid	DC	Solid state	Fixed	11.81 1	Goodyear, Run Flat.	Disc Brakes.	65 mph max 100 mi. at 55 mph	(167)
Anderson Third Generation	Utility Van 2500 lbs	Lead-acid 72 V	DC series, 20 HP. (35 HP peak), 240 amp, 4000 rpm , 170 lb Blower cooled.	SCR	2-speed automatic, planetary gear, mechanical shift on speed and torque, FWD		Radial, 165 x 15.	Dis/drum hydraulic	55 mph max 60 mi. at 45 mph	(40), (41)
TSL - T/3 Van (1974)	Van 3000 lbs.	Lead-acid 84 V, 900 lbs	DC series 20 HP (35 HP. peak)	SCR, 600 amp	Fixed	7 83.1	Radial, 165 x 15	Disc/drum	40 mph max. 0 - 30/16 sec 30 mi. on cycle	(157)
Lunar Rover (1971)	500 lbs		Four DC series, brush type, or four permanent magnet brush-less	Electronic plus four power contacts for reversing	80 1 harmonic drive and planatary spur gear.		32 in diameter wire mesh.	4 wheel regen-erative brakes	10 mph 74 mi. range	(73)

ORIGINAL PAGE IS OF POOR QUALITY

(5) Generally The Overall Vehicle Body Design Presents Constraints On The Power Train Configuration.

(6) The Concept of "Load Levelling" Has Been Given A Good Deal Of Attention In The Electric Vehicle Literature.

(7) Discharge Characteristics Of Lead-Acid Batteries In Electric Vehicle Applications Are Not Well Understood.

(8) Several Trends In The Approach To Electric Vehicle Power Train Design Are Evident.

FREQUENCY OF ELECTRIC VEHICLE DESIGN APPROACH

	NUMBER*
Total number of vehicles reviewed	37
Motor Types	
DC Series	23
DC Separately Excited	7
AC	2
Blower Cooling of Motor	13
Controller Types	
Battery Switching (Contactor)	6
Solid State (SCR)	27
Transmission Types	
Fixed Gear Reduction	20
Manual Gear Change	4
Automatic Gear Change	6
CVT	3
Power Train Configuration	
Rear Motor and Drive	8
Front Motor and Drive	3
Conventional	11

*Complete data not available for all vehicles.

ORIGINAL PAGE IS OF POOR QUALITY

Source: Booz, Allen & Hamilton Inc.

2. DC MOTORS AND CONTROLLERS REPRESENT A MATURE TECHNOLOGY WHICH IS WELL SUITED TO THE ON-THE-ROAD, ELECTRIC VEHICLE APPLICATION.

(1) AC Motors Are Extensively Used In Constant Speed Applications.

(2) AC Motor Controls Require Complex and Sophisticated Circuitry.

(3) DC Motors Have Been Extensively Used In Variable Speed Applications.

(4) DC Motor Controls Have Covered A Spectrum Ranging From Battery Switching To Variable Duty-Cycle Choppers.

(5) An Integrated Traction Control System For An Electric Automobile Is Desirable.

MOTORS AND CONTROLLERS

MOTOR/CONTROLLER SUMMARY

Motor Type:	AC Induction	DC Series Wound	DC Shunt Wound
Primary Application Areas:	. Constant speed	. Variable speed . Torque control	. Variable speed . Speed control
Advantages:	. Low cost motor which - Is rugged - Is brushless - Is low in weight - Requires little maintenance . Control circuitry is isolated from power electronics	. Compact frame size . High starting torque and high torque at low speed . Ease of speed control . Inherent feedback characteristic of the series field . Excellent torque regulation . Chopper control offers - Smooth operation - Efficiency - High reliability	. Compact frame size . High torque at low speed . Excellent speed regulation . Ease of accomplishing controlled braking and regeneration . Chopper control offers - Smooth operation - Efficiency - High reliability
Disadvantages:	. Low speed operation is difficult to achieve . Complex controller is required. This leads to - Low reliability - High costs - Low efficiency due to power conversions . Limited speed range of seven or eight to one	. Regenerative braking more difficult to accomplish . Loss of load results in dangerous overspeed condition	. Difficult to control under varying load conditions . High hysteresis content in the weakened field range . Field loss results in dangerous overspeed condition

ORIGINAL PAGE IS OF POOR QUALITY

Source: Booz, Allen & Hamilton Inc.

PRINCIPAL SUPPLIERS OF DC MOTORS

- BALDOR
- GENERAL ELECTRIC
- GOULD
- LAWNEL
- PRESTOLITE
- RELIANCE

PRINCIPAL SUPPLIERS OF DC MOTOR CHOPPER CONTROLLERS

- CABLEFORM
- GENERAL ELECTRIC
- RELIANCE
- SEVCON

3. THE MECHANICAL PROTION OF AN ELECTRIC VEHICLE POWER TRAIN SERVES TO MATCH THE OUTPUT OF THE MOTOR TO THE LOAD REQUIRED AT THE VEHICLE WHEELS.

(1) Mechanical Transmissions Generally Sacrifice Efficiency For the Flexibility of Automatic Ratio Change.

(2) Differentials and Axles Are Tailored To Each Application.

(3) The Self-Adjusting Drum Brake System Without Power Assist Offers Low Weight and Low Residual Drag.

(4) The Radial Tire Represents the State-of-the-Art Tire For an Electric Vehicle.

(5) Bearing Power Loss Can Be a Relatively Insignificant Part of the Total Power.

- TRANSMISSIONS
- DIFFERENTIALS/AXLES
- BRAKES
- TIRES
- BEARINGS

MANUFACTURERS OF CANDIDATE TRANSMISSIONS

Company	Type
Gates Rubber Co. Denver, Colorado	Belts for variable speed belt drives
Graham Transmissions, Inc. Menomonee Falls, Wisconsin	CVT - traction type
Hans Heynau GmbH Germany	CVT - traction and "V" belt types
Industrial Tectonics, Inc. Ann Arbor, Michigan	CVT - traction type
McKee Engineering Corp. Palatine, Illinois	Modified STD automotive automatic transmissions
Marathon - USA Inc. Stamford, Connecticut	CVT-hydrostatic type
Morse Chain Div. Ithaca, New York	Fixed ratio chain & belt types
Neuweg GmbH Wuert, West Germany	CVT-traction type
SRF Jerusalem, Israel	CVT-hydrostatic
Sumitomo Machinery Co. Ltd. Carlstadt, New Jersey	CVT-various traction element types
Walter Chery Meadville, Pennsylvania	CVT
Warner Gear Div. Muncie, Indiana	Fixed ratio gear reducers
Electromatic Incorporated Cleveland, Ohio	CVT - variable slip fluid drive
Electromatic Drive Corp. Orange, California	CVT - variable ratio "V" belt

Company	Type
American-Standard Dearborn, Michigan	CVT - fluid drive
Arter and Co. Mannedorf, Switzerland	CVT - traction type
Emil Beeklege Willowick, Ohio	Multiration planetary - automatic shift
Chrysler Corp. East Syracuse, New York, N.Y.	Standard automotive manual & automatic transmissions
Chrysler Marine Marysville, Michigan	Standard automotive manual & automatic transmissions
Dana Corporation Auburn, Indiana	Manual shift, hydrostatic and fixed ratio gear type
Eaton Corp. Marshall, Michigan	Fixed ratio gear reducers
Excelermatic Austin, Texas	CVT - traction type
Fafnir Bearing Co. New Britain, Connecticut	CVT - traction type
Floyd Drives Co. Denver, Colorado	CVT - traction type
Fluid Drive Engineering Co. Wilmette, Illinois	Fluid torque converter & variable speed "V" belt
Ford Motor Co. Livonia, Michigan	Standard automotive manual & automatic transmissions

ORIGINAL PAGE IS
OF POOR QUALITY

Source: Booz, Allen & Hamilton Inc.

MANUFACTURERS OF CANDIDATE TRANSMISSIONS

Company	Type
Holton Axle & Transmission Juneau, Wisconsin	Fixed ratio transmissions
Fairfield Manufacturing Co., Inc. Lafayette, Indiana	Fixed ratio gear reducers
Winsmith Springfield, New York	CVT - traction type and fixed ratio gear reducers
SEW - Eurodrive Bruchsal, West Germany	CVT - traction and self types, fixed ratio gear reducers
AVS Ltd. England	High efficiency Hobbs torque converter
Sta Rite	CVT-hydrostatic type
Rydreco	CVT-hydrostatic type
Ernodrive Inc. Troy, Ohio	CVT - traction type
Lewellen Mfg. Co. Columbus, Ohio	CVT - pulley type
Reliance Electric Co. Cleveland, Ohio	CVT - pulley type
Lovejoy Inc. Downers Grove, Illinois	CVT - "V" belt type

Source: Booz, Allen & Hamilton Inc.

INPUT/OUTPUT CHARACTERISTICS OF TRACTION DRIVES

TYPE	SUPPLIER	RATING HP	RATIO RANGE	OUTPUT SPEED 1750 RPM INPUT	WEIGHT, LB, WITHOUT MOTOR 10 HP	100 HP	EFFICIENCY %
Ring-Cone							
With planetary	Graham	1/15-5	3:1	0-500	--	--	85-90
	Graham-Shimpo SCM	1/8-5	4:1	112-450	--	--	82
dual with planetary	Graham-Shimpo OM	1/8-5	10.1	300-0-300	--	--	60
single cone	Graham-Shimpo NT	1/16-2	10.1	5-500	--	--	60
Variator ball	Eaton	1/2-16	9:1	600-5400	600	--	75-93
	Winsmith-Allspeed	1/4-15	9:1	600-5200	375	--	75-90
roller	Koppers-Kopp	1-100	12:1	250-3000	265	1275	83-94
	Parker-Unicum	1/4-20	8:1	300-2500	480	--	77-92
Free Ball	Floyd	1/3-1 1/2	10.1	to ± 1750	--	--	80
	TFK-Contraves	1-25	40:1	80-3500	180	--	85-90
Disc planetary	ITI Disco-Lenze	1/3-15	6:1	200-1200	230	--	75-84
Beier	Sumitomo	1/4-220	4:1	360-1440	400	4200	80-87
Toroidal	David Brown-Sadi	1/3-5.5	7:1	600-4200	--	--	80
Metal Belt	FMC PIV	7.5-75	6:1	715-4200	310	1200 (75HP)	85-90

Source: Power Transmission Design, November, 1975.

ORIGINAL PAGE IS OF POOR QUALITY

EXCELERMATIC TRANSMISSION

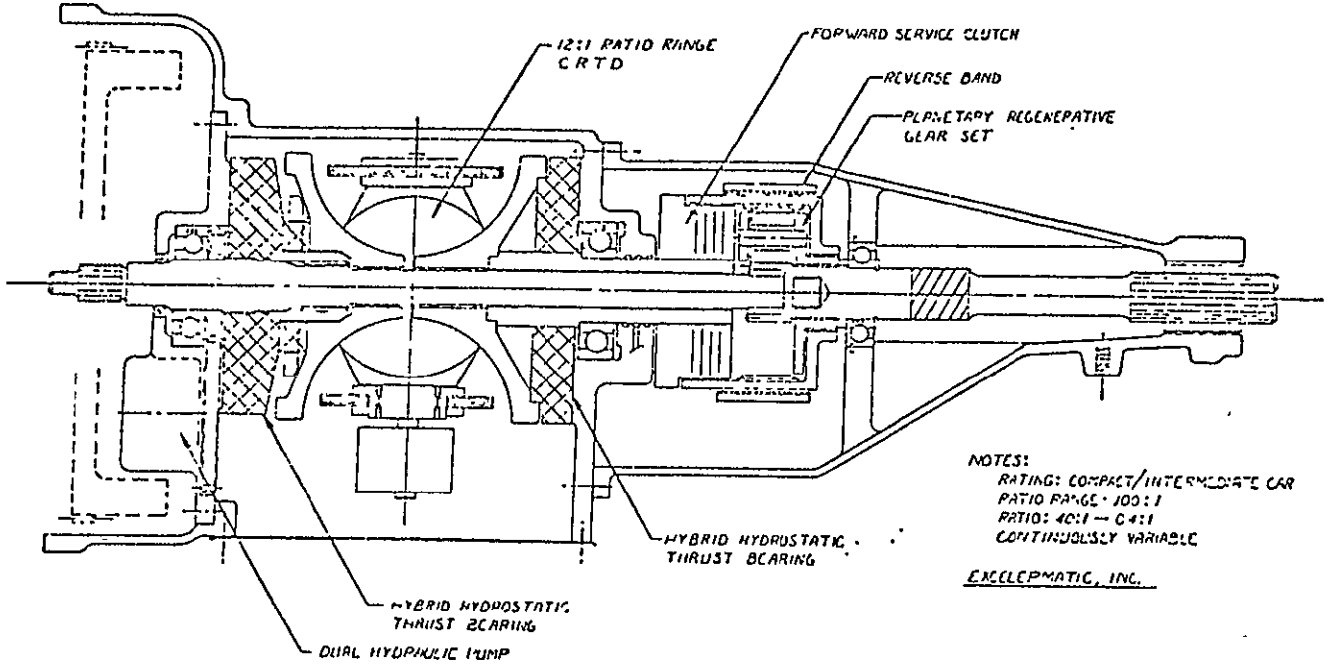

ORIGINAL PAGE IS
OF POOR QUALITY

Source: Excelermatic

HANS HEYNAU TRANSMISSION
(TRANSMISSION TYPE)

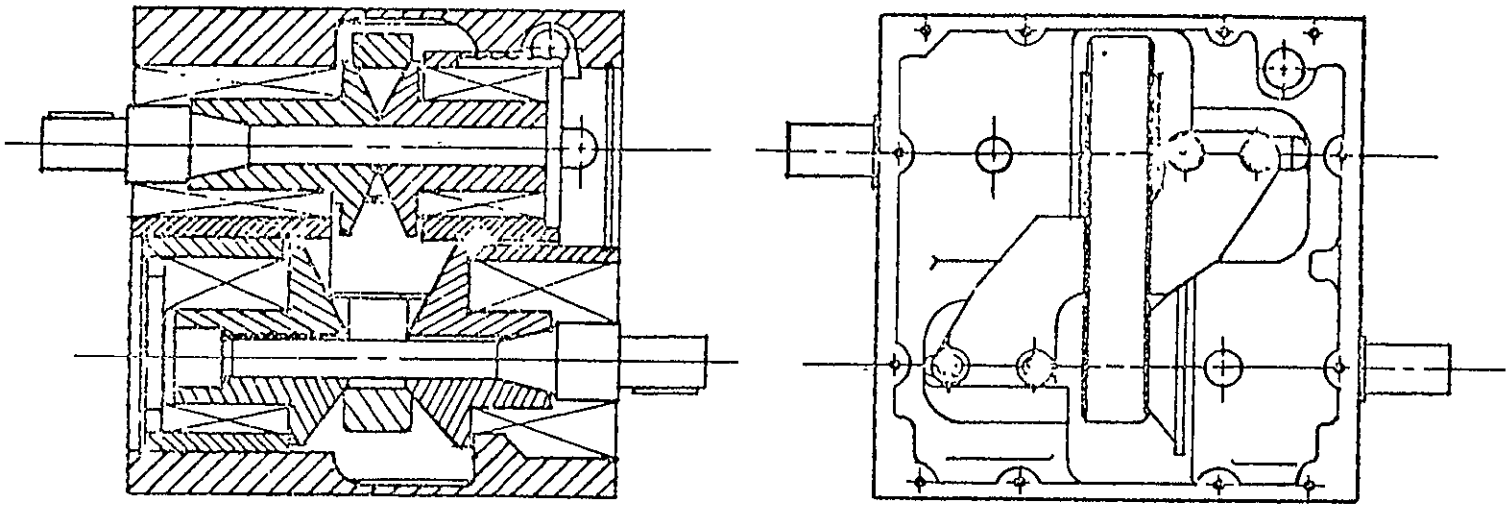

Source: Hans Heynau GmbH, Germany

HANS HEYNAU TRANSMISSION
(BELT TYPE)

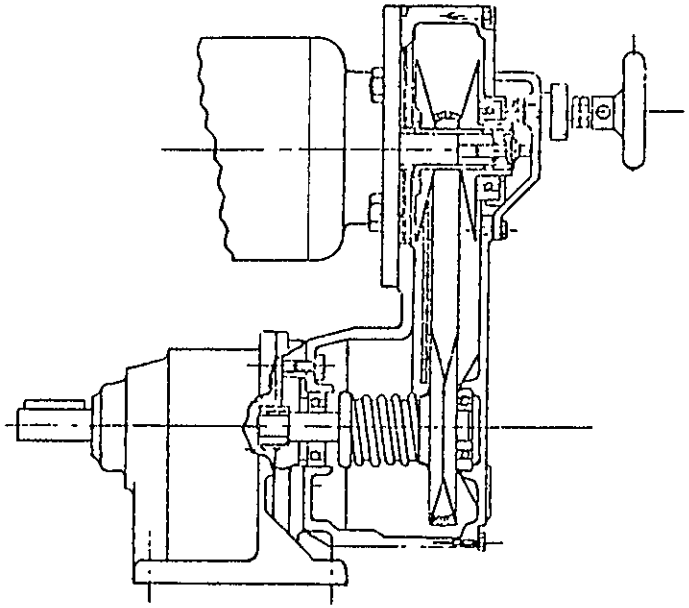

Source: Hans Heynau GmbH, Germany

ORIGINAL PAGE IS
OF POOR QUALITY

FAFNIR TRANSMISSION

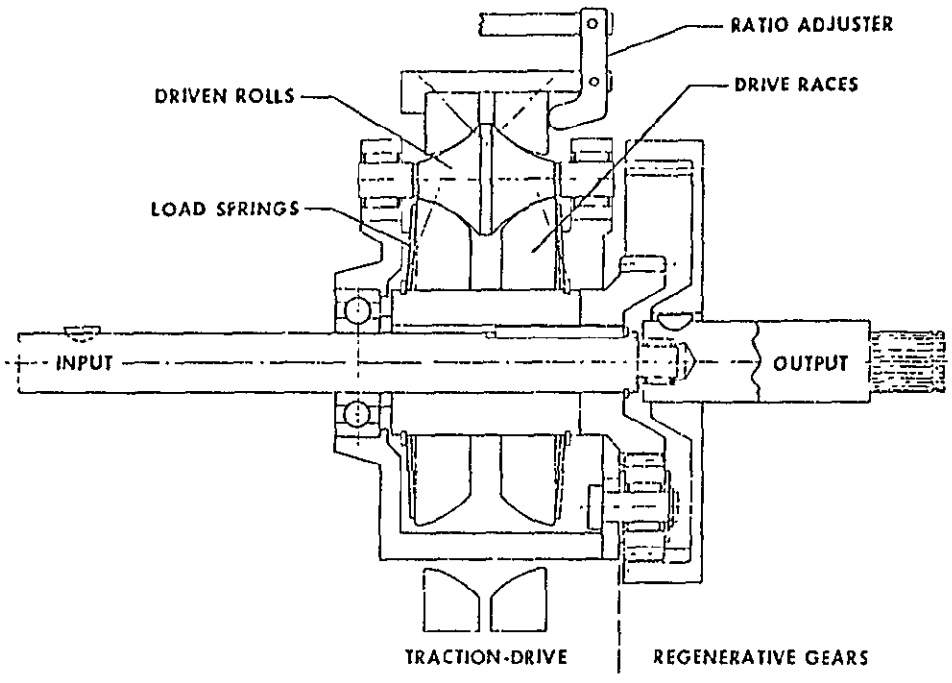

Source: Fafnir

ELECTROMATIC DRIVE TRANSMISSION

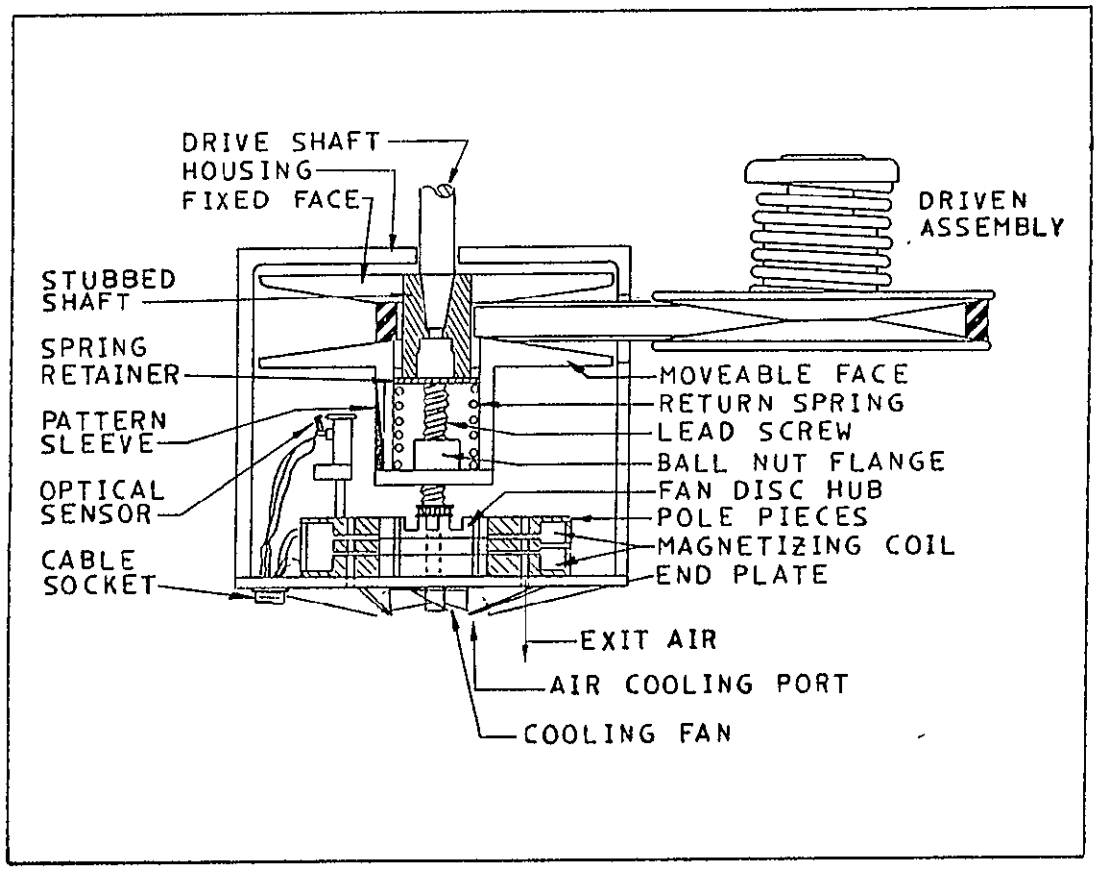

Source: Electromatic Drive Corp.

ORIGINAL PAGE IS
OF POOR QUALITY

TRANSMISSION SELECTION CRITERIA

- SIZE AND WEIGHT
- EFFICIENCY
- POWER CAPACITY
- RANGE OF RATIO CHANGE
- CONTROLLABILITY
- RELIABILITY

PERFORMANCE CHARACTERISTICS
AVS 7.5" DIA HOBBS CONVERTER
ELECTRIC VEHICLE APPLICATIONS
(35° Fixed vane pitch)

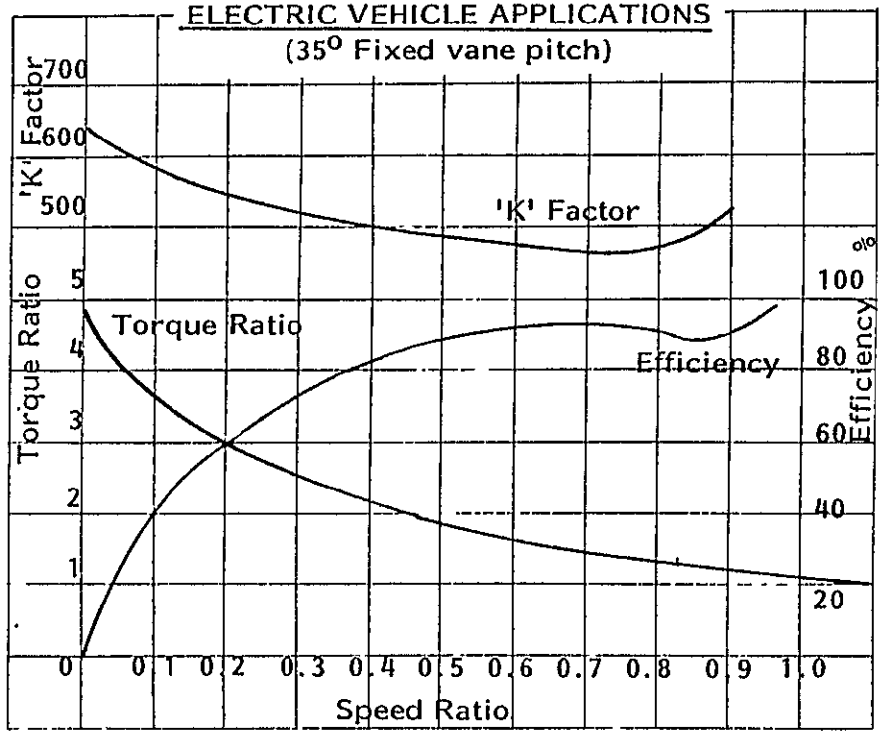

Source: Advanced Vehicle Systems, Ltd.

ORIGINAL PAGE IS
OF POOR QUALITY

EFFICIENCY OF TYPICAL AUTOMOTIVE TRANSMISSION

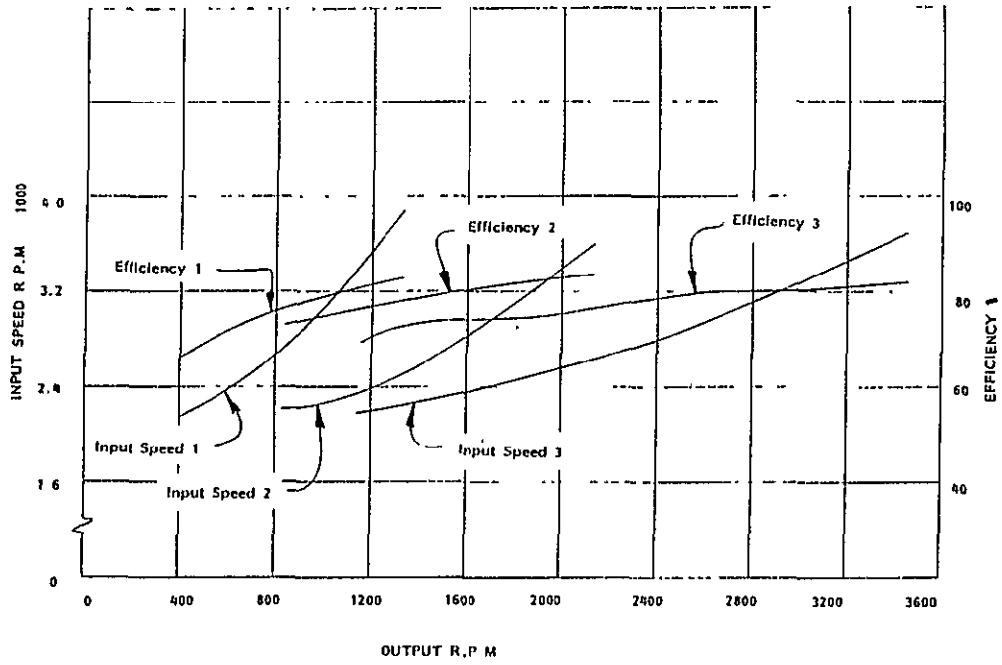

ORIGINAL PAGE IS
OF POOR QUALITY

Source: Major Automotive Manufacturer

SUPPLIERS OF AXLES AND DIFFERENTIALS

- DANA
- EATON
- FAIRFIELD MANUFACTURING
- HOLTAN AXLE AND TRANSMISSION
- LEAR SIEGLER

BRAKE SUPPLIERS

- BENDIX
- DELCO MORAINE
- GOODYEAR INDUSTRIAL BRAKES
- MERCURY DIVISION OF APRO
- MINNESOTA AUTOMOTIVE
- TOOL-O-MATIC

TIRES

EFFECT OF TORQUE ON ROLLING RESISTANCE OF CROSS-PLY TIRES

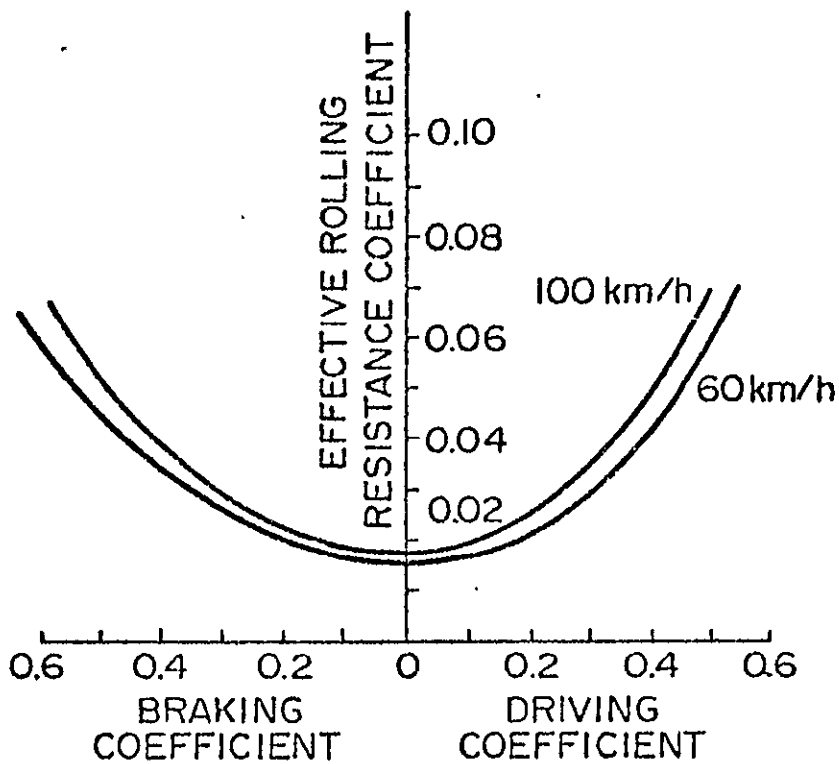

Source: Ref. 182

EFFECT OF INFLATION PRESSURE ON EQUILIBRIUM ROLLING RESISTANCE

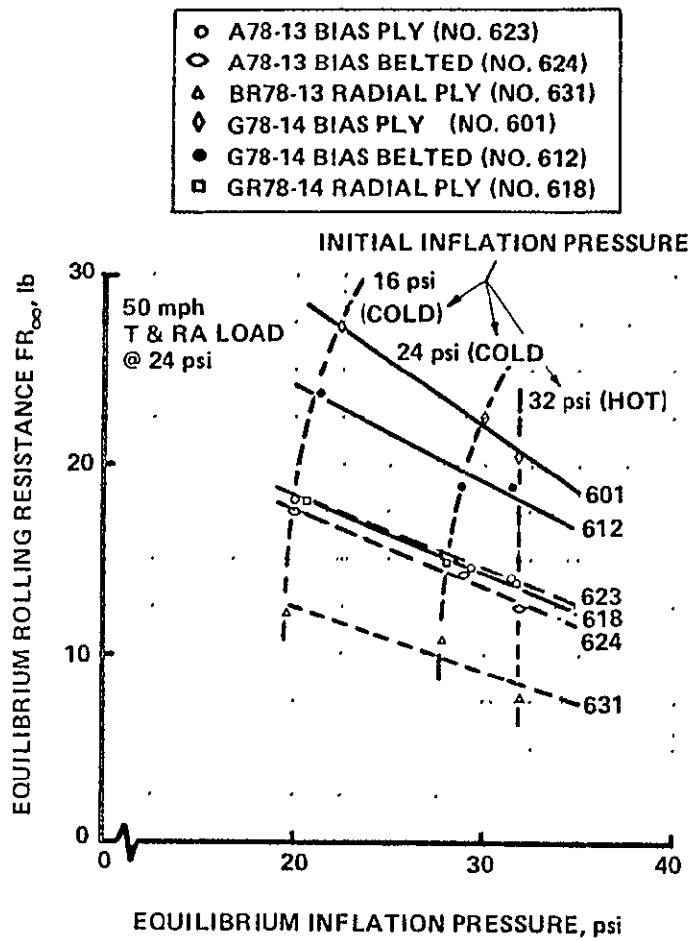

ORIGINAL PAGE IS
OF POOR QUALITY

EFFECT OF LOAD ON ROLLING RESISTANCE

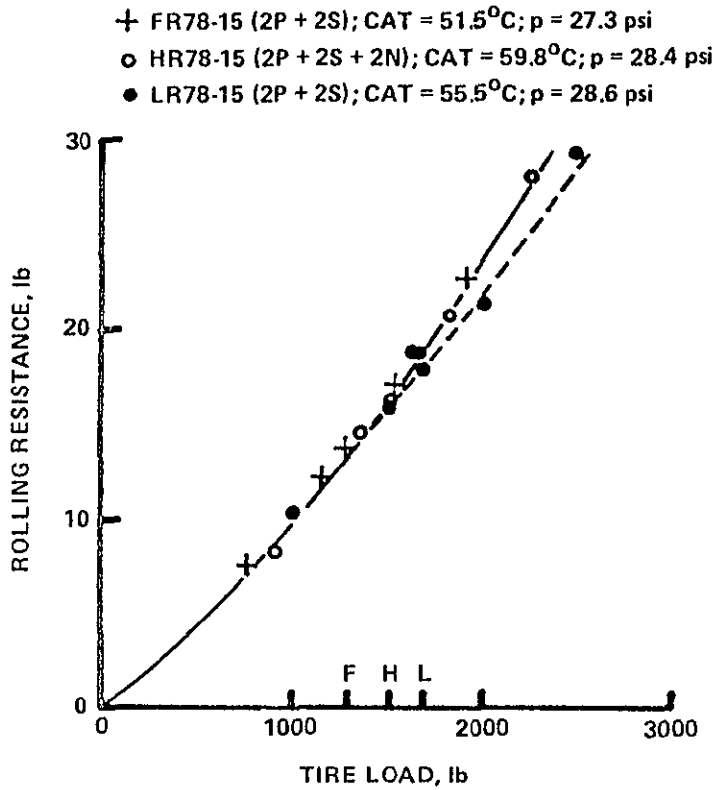

ORIGINAL PAGE IS
OF POOR QUALITY

EQUILIBRIUM TIRE ROLLING RESISTANCE

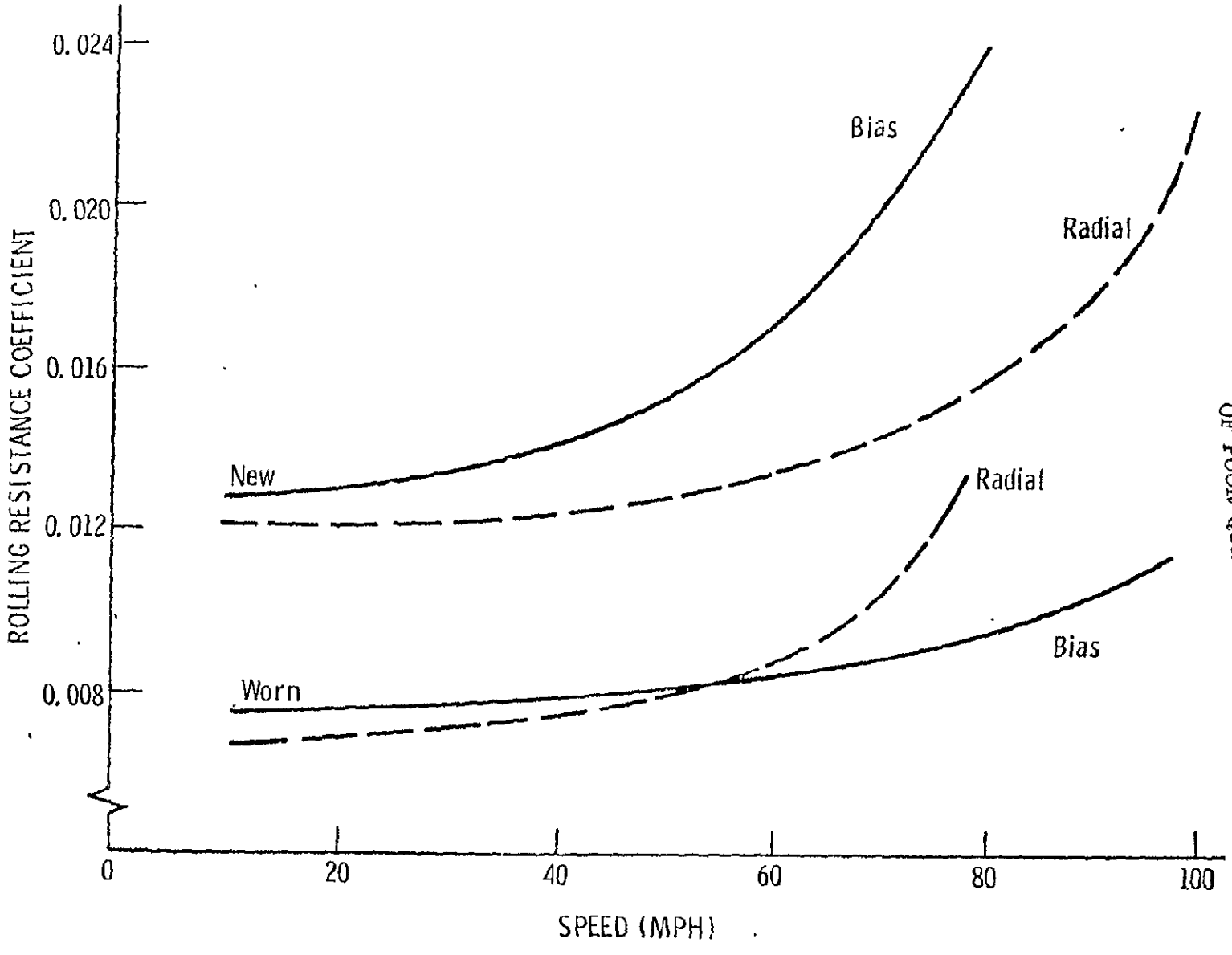

ORIGINAL PAGE IS
OF POOR QUALITY

RELATIVE ROLLING RESISTANCE AS A FUNCTION OF DISTANCE TRAVELED DURING WARMUP

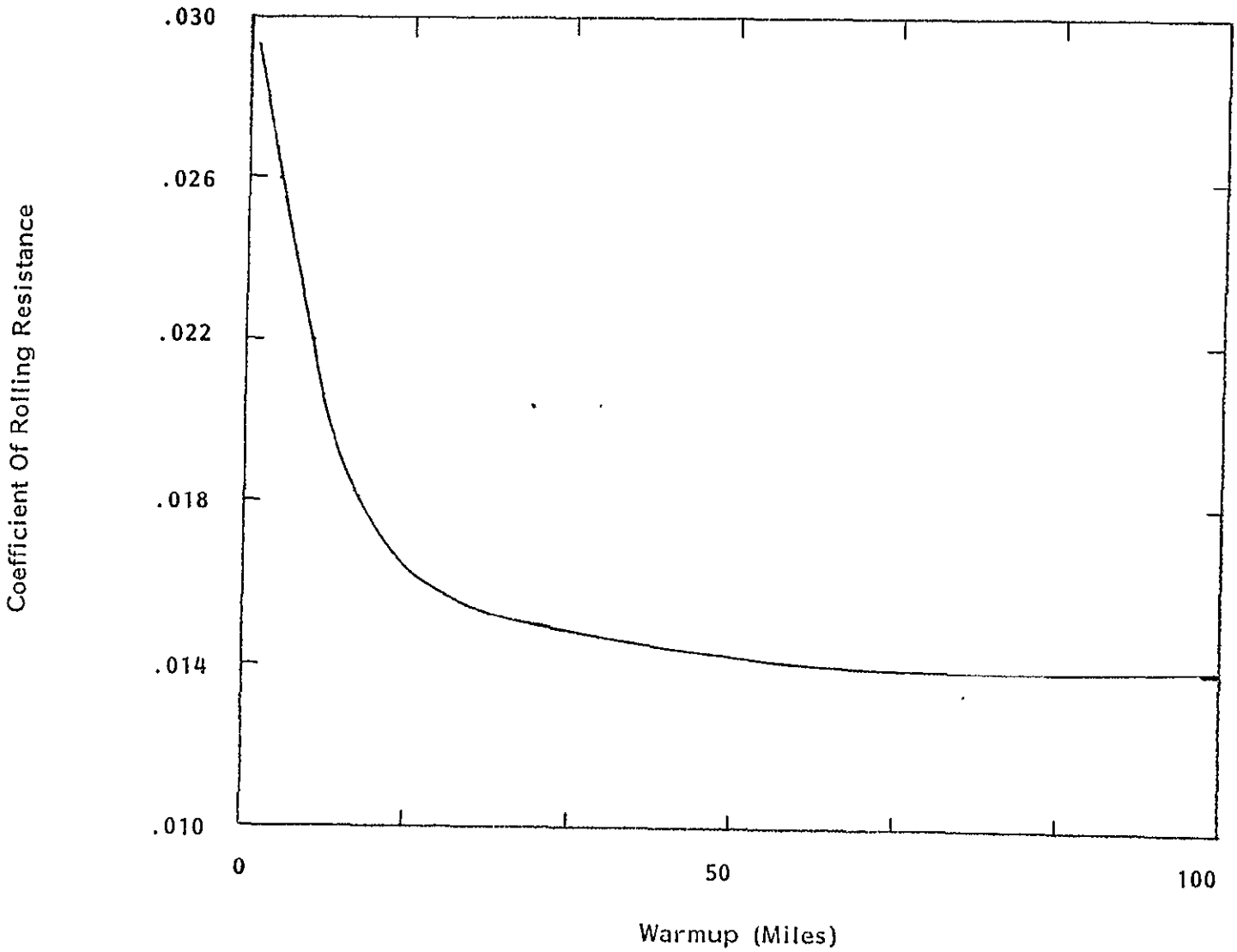

EFFECT OF TIRE SIZE ON ROLLING RESISTANCE

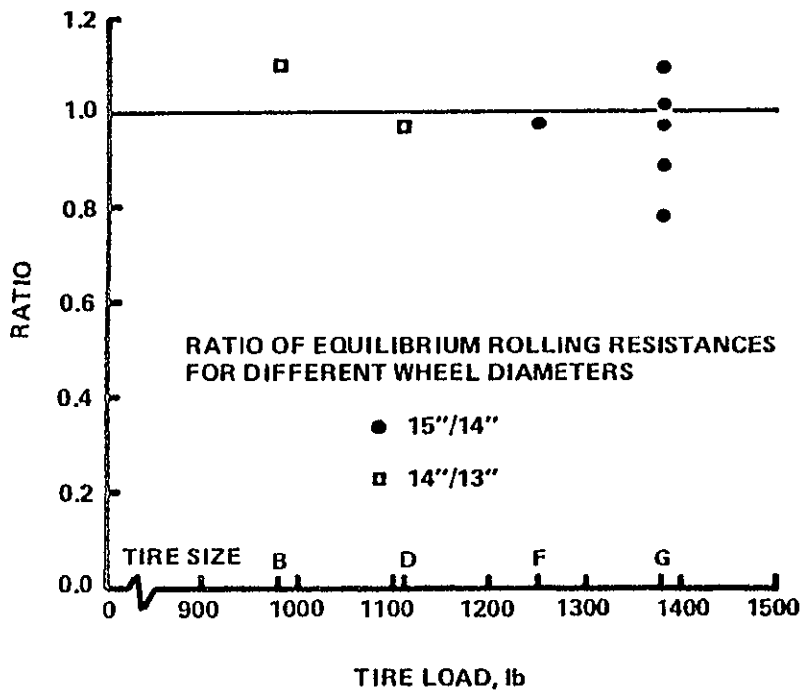

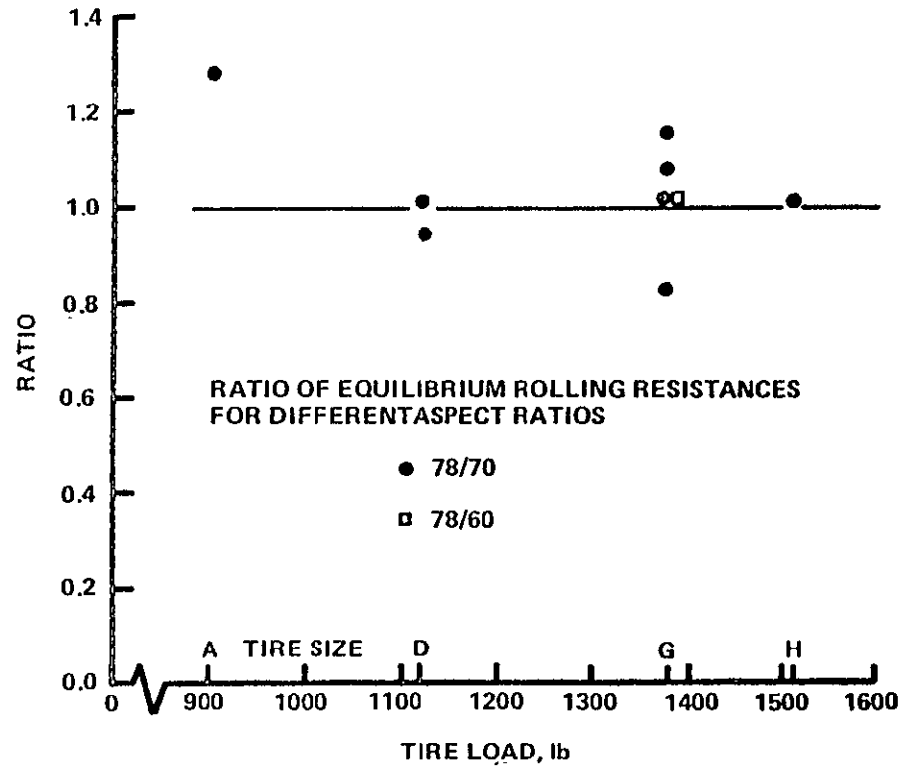

ORIGINAL PAGE IS
OF POOR QUALITY

IN GENERAL, TIRES FOR THE ELECTRIC VEHICLE SHOULD BE:

- Of Radial Construction
- With Load Capacity Well In Excess of That Required To Support The Vehicle.
- Inflated To The Maximum Safe Pressure.

REPRESENTATIVE ROLLING RESISTANCE DATA

Manufacturer	Model	Load	Inflation Pressure	Speed	Rolling Resistance
Firestone	ACT P185/65R14	940 lbs.	24 psi	20 mph	13 lbs.
				50	13.6 lbs.
Firestone	HR7515	80% rated	20	60	15 lbs.
	HR7515	80% rated	30	60	12 lbs.
Firestone	GR7815	700	--	--	6.8 lbs.
	GR7815	1000	--	--	10.2 lbs.
Goodyear	BR7813	980	24	--	9.8 lbs.
Goodyear	HR7815	1510	24	--	12.1 lbs.

4. COMPONENTS WHICH REPRESENT THE CURRENT STATE-OF-THE-ART INCLUDE THE SERIES DC MOTOR, CHOPPER CONTROLLER AND RADIAL TIRES.

(1) The Series Wound DC Motor and Pulse Type Controller Are Well Suited To Electric Vehicle Power Trains.

(2) Several Mechanical Transmissions Are Suitable For EV's In The Power Range Required.

(3) Low Energy Loss Differentials, Bearings and Tires are Available.

(4) The Rear Mounted Motor/Transaxle Or The Front Wheel Drive Are Preferred Power Train Architectures.

(5) The Selection of an Optimum Power Train Requires a Systems Analysis of the Hardware Operating Over the Drive Cycle.

III. STATE-OF-THE-ART POWER TRAIN DESIGN

VEHICLE CHARACTERISTICS:

- Four Passenger, Urban Type
- Test Weight = 2850 + Power Train
- 16 EV - 106 Batteries
- Effective Frontal Area = 6 $ft.^2$

PERFORMANCE REQUIREMENTS:

- Cruise Speed = 55 MPH
- Gradeability = 10% @ 30 MPH
- Driving Cycle Per SAE J227a, Schedule D

SAE J227a
SCHEDULE D
DRIVING CYCLE

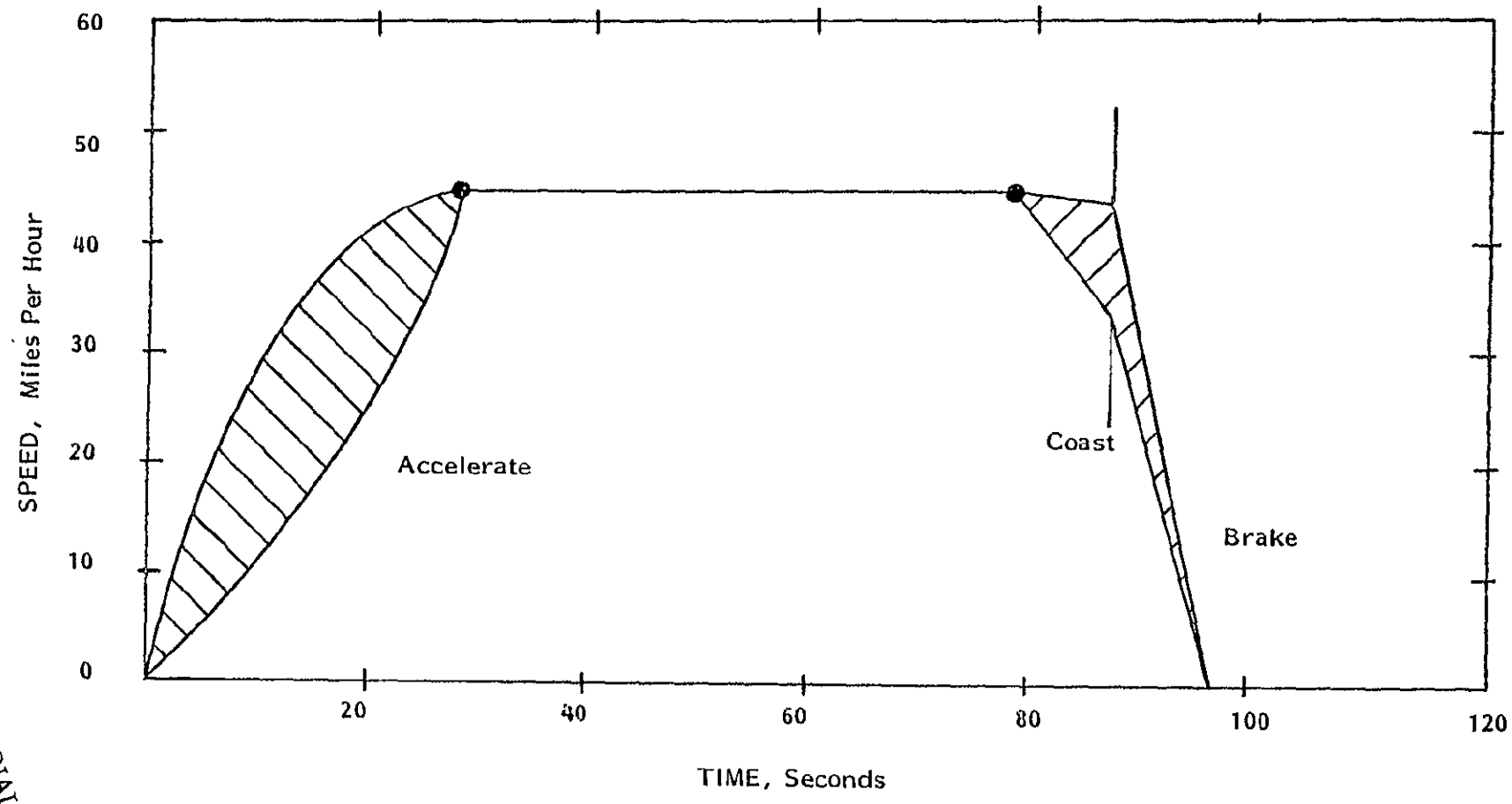

ORIGINAL PAGE IS
OF POOR QUALITY

1. THE CALCULATION OF RANGE PROCEEDS BY ACCOUNTING FOR THE ENERGY CONSUMED BY THE COMPONENTS AND THEN DRAWN FROM THE BATTERIES AS THE VEHICLE OPERATES OVER A DRIVING CYCLE.

(1) Vehicle Road Load Is the Sum of Aerodynamic Drag and Inertial Forces.

(2) Losses Due To Tire Rolling Resistance, Mechanical Friction and Windage, As Well As Motor/Controller Losses Require Additional Power.

(3) Range Is Calculated By Depleting the Energy Stored In the Batteries Until the Vehicle Cannot Operate Over the Driving Cycle.

(4) An Existing Computer Program Was Used To Support Preliminary Design Studies.

CALCULATION SEQUENCE

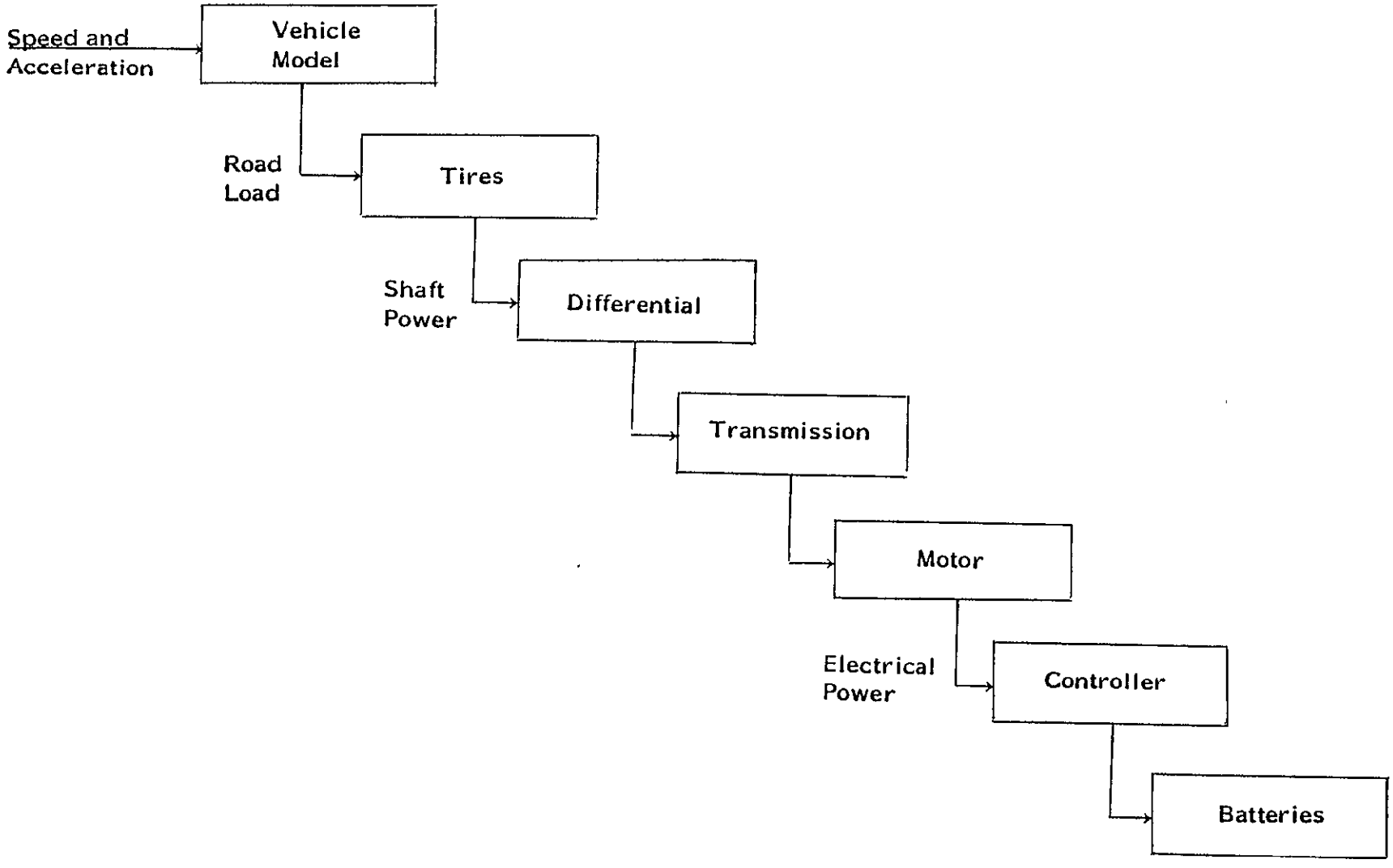

COMPUTER SIMULATION

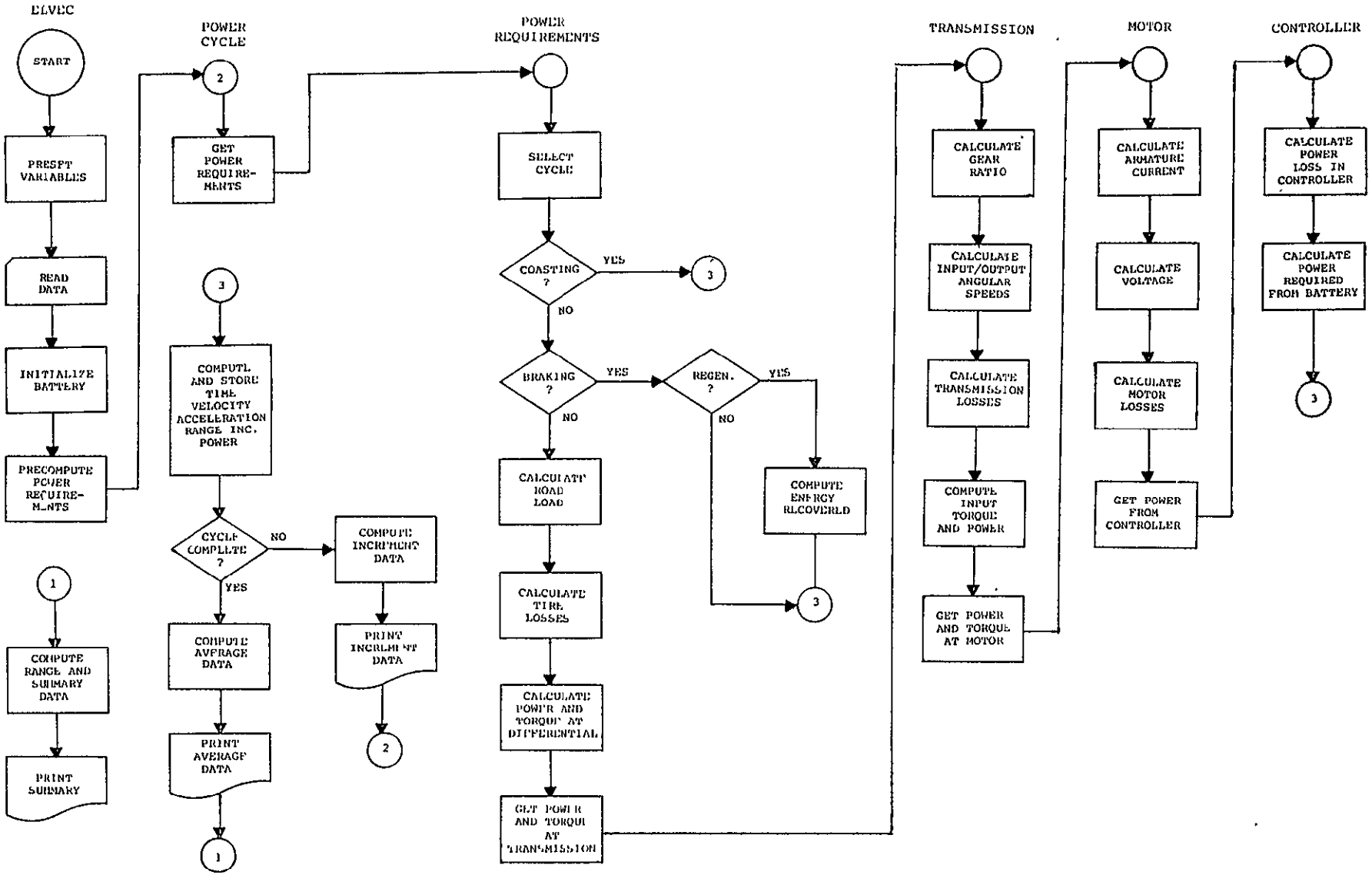

ORIGINAL PAGE IS OF POOR QUALITY

ACCELERATION PROFILE

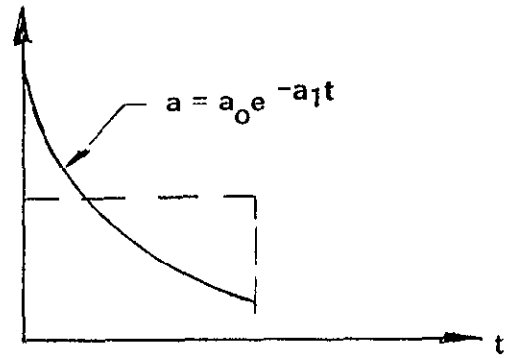

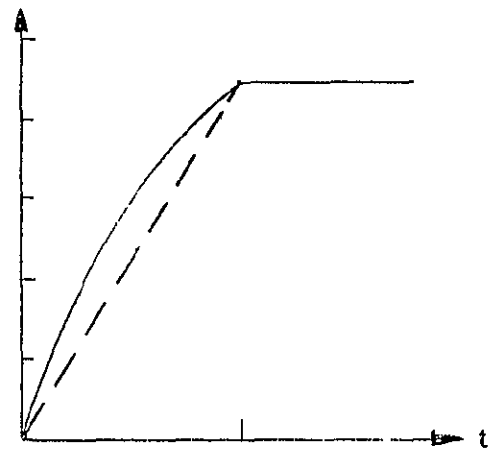

- INITIAL ACCELERATION 0.125 G
- FINAL ACCELERATION 0.037 G

2. ANALYSIS SERVED TO ESTABLISH THE MAXIMUM POTENTIAL RANGE, THE SENSITIVITY OF RANGE TO THE COMPONENT PARAMETERS AND TO SIZE THE COMPONENTS.

COMPUTED RANGE OF IDEAL 3600 POUND VEHICLE

CYCLE	RANGE (Miles)
55 MPH, CONSTANT SPEED	75
SAE J227a, SCHEDULE D	51/60*
30 MPH, 10% GRADE	15

* With Regeneration

RANGE SENSITIVITY

A=J 227 CYCLE
B=55 MPH
C=30 MPH & 10% GRADE

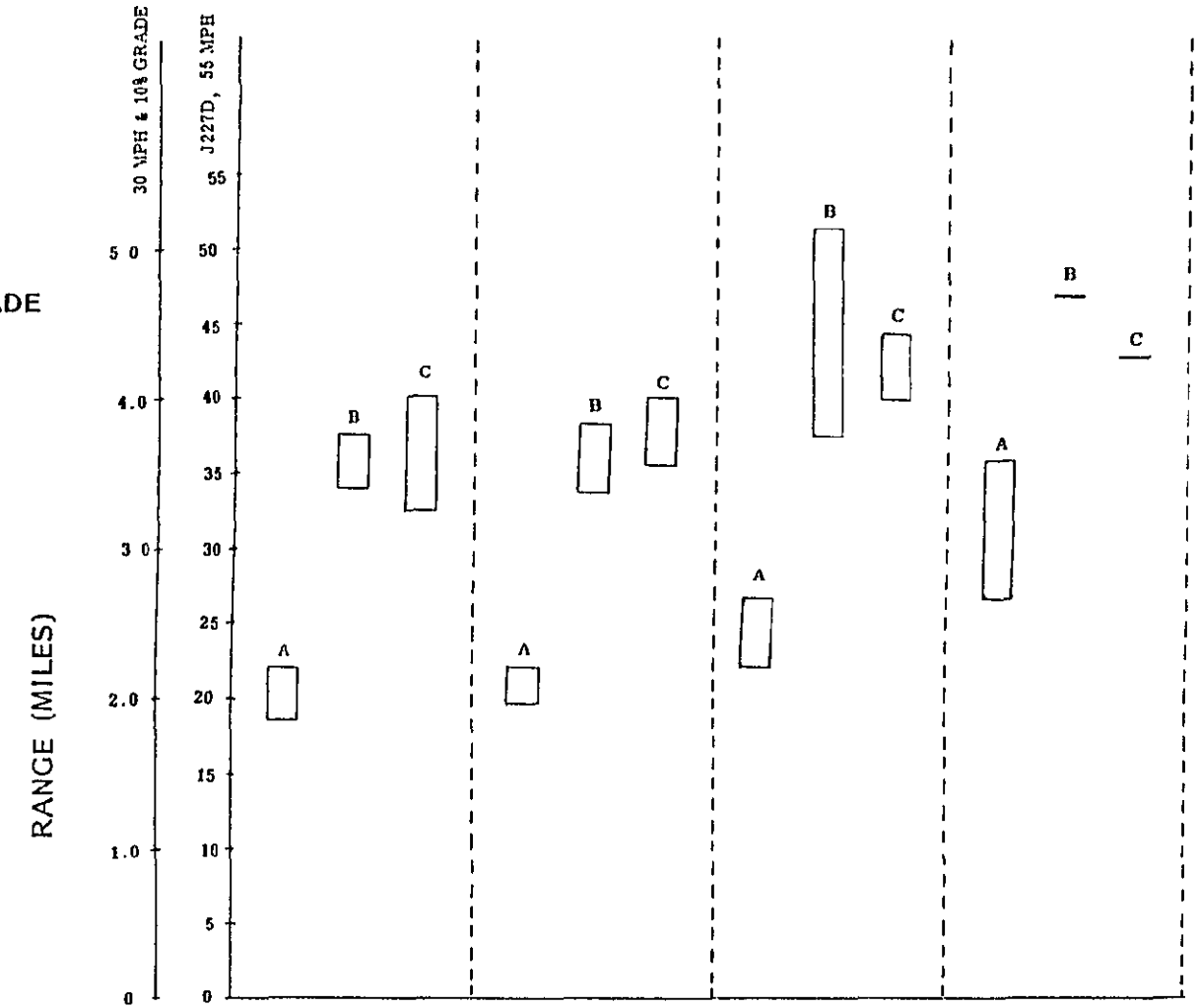

Vehicle Weight (lbs.)	3500 - 4000	3600	3600	3600
Transmission Efficiency	0.92	0.85 - 0.98	0.92	0.92
Rolling Resistance (lb./lb.)	0.014	0.014	0.008-.014	0.01
Regenerative Braking	No	No	No	No-Yes

ORIGINAL PAGE IS OF POOR QUALITY

ROAD LOAD FOR IDEAL, 3600 POUND VEHICLE

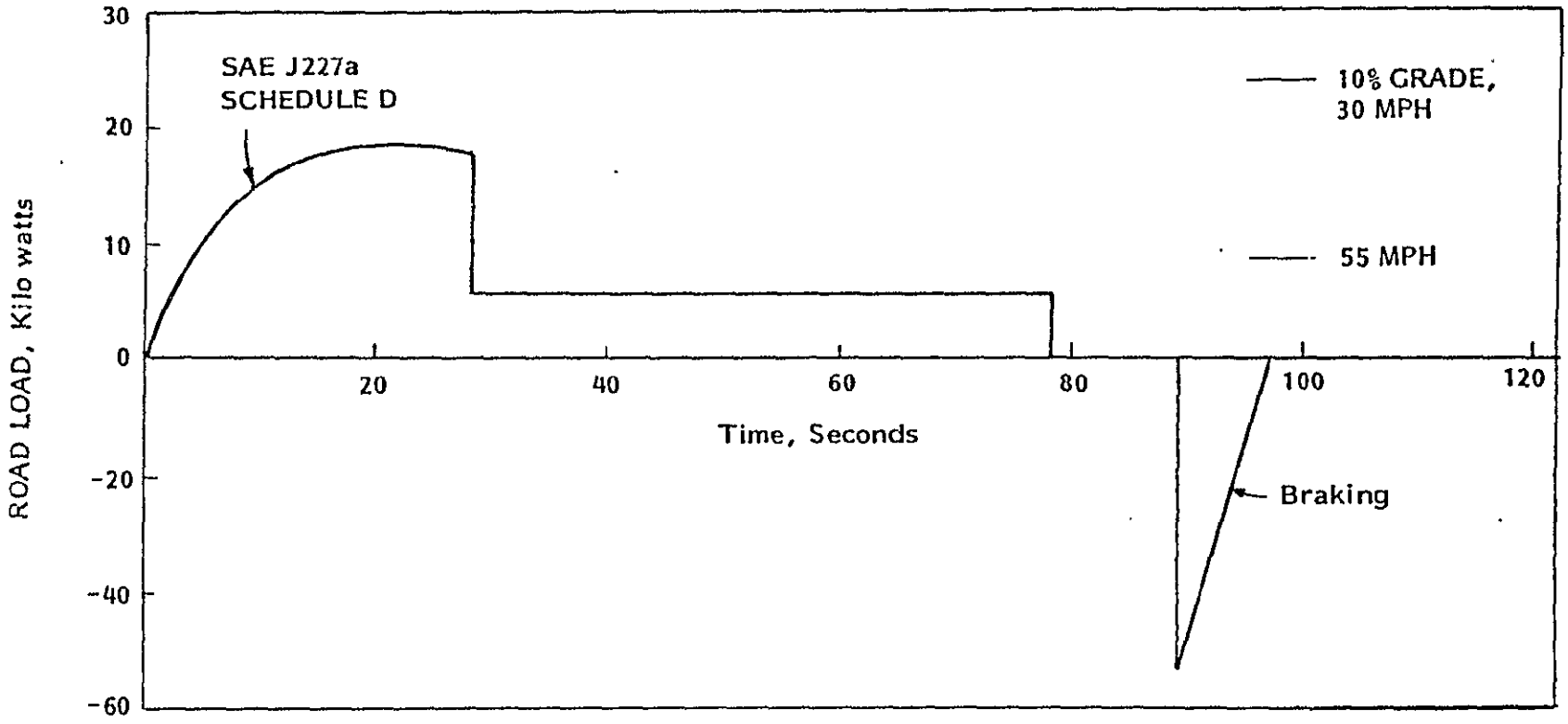

A Motor Rated at 24 Horsepower Is Required for the Electric Vehicle Power Train.

3. THE STATE-OF-THE-ART POWER TRAIN CONSISTS OF A DC SERIES WOUND MOTOR, SCR CONTROLLER, V-BELT TRANSMISSION, LOW-LOSS DIFFERENTIAL AND RADIAL TIRES.

STATE-OF-THE-ART MOTOR

Type	Series wound DC with interpoles
Manufacturer	Prestolite
Model	EO-26747
Weight	205 lbs.
Size	$11\frac{1}{4}$" OD x 17" L
Power Rating	24HP continuous (28HP, blower cooled)
Voltage	100 V Nominal
Maximum Speed	4000 RPM

PRESTOLITE EO-26747 CHARACTERISTICS

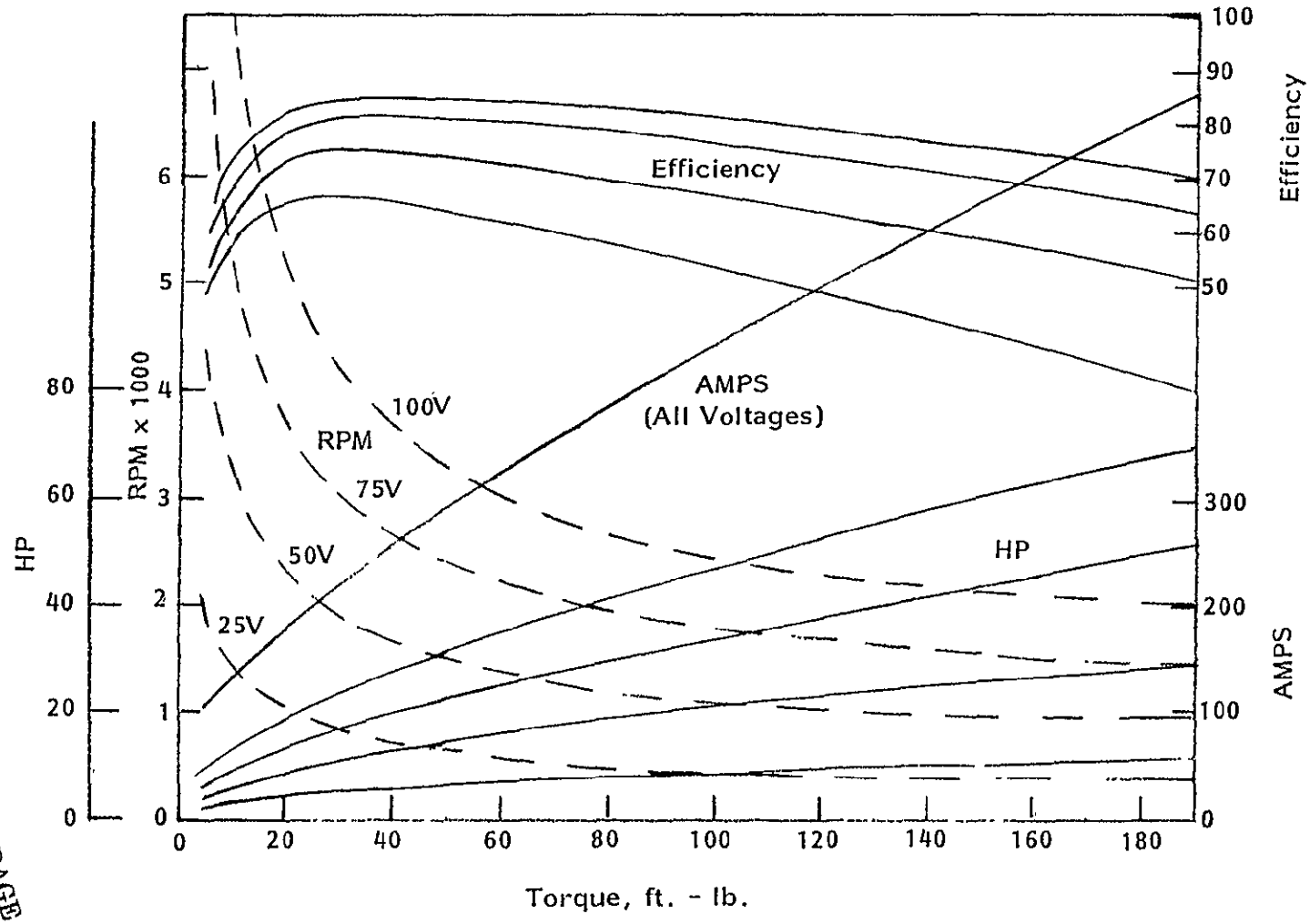

ORIGINAL PAGE IS
OF POOR QUALITY

MOTOR CONTROLLER SPECIFICATION

Type	SCR chopper, logic unit, coil and capacitors
Manufacturer	Sevcon
Model	7650-4
Rated Voltage	80-130 volts
Rated Current	750 amps max, 400 amps continuous
Weight	60 lb.
Size	Chopper: 14" x 10" x 7" Logic: 3" x 11" x 6" Coil: 6" x 4" x 5" Capacitors: 10" x 5" x 6"

CONTACTORS

- Directional Contractor Pair
  - HB Electric
  - Model HB 33BA 123LIB
  - Coil Voltage = 12 volts
  - Weight = 10 lbs.

- Line Contactor
  - HB Electric
  - Model HB 39BD 122LIB
  - Coil Voltage = 12 volts
  - Weight = 5 lbs.

MECHANICAL COMPONENTS

Component	Supplier	Estimated Weight (lbs.)
Tires	Goodyear Custom Polysteel Radial HR-78-15, 32 psi, or equivalent	4 x 20
Wheels	Kelsey-Hayes	4 x 20
Brakes	Delco-Moraine drum type	4 x 20
Drive Shaft	Dana Spicer Universals and Torque Tubes	30
Differential	Dana Spicer IS-18, modified	35
Drive Chain	Morse Hy-Vo	15
Miscellaneous		10

SIMULATED POWER TRAIN PERFORMANCE WITH TEN MOTOR/TRANSMISSION COMBINATIONS HAD THE FOLLOWING COMMON FEATURES:

- The motor was the Prestolite EO-26747 DC series motor
- The tires were of 0.32 m radius
- The rolling resistance assumed was 0.098 N/kg.
- The transmission and differential efficiencies were estimated from manufacturer's data.
- A weight penalty (or benefit) was assigned with respect to a baseline of 3600 lbs. (1633 kg)

CASE 1

FIXED RATIO REDUCTION
HYPOID GEARING

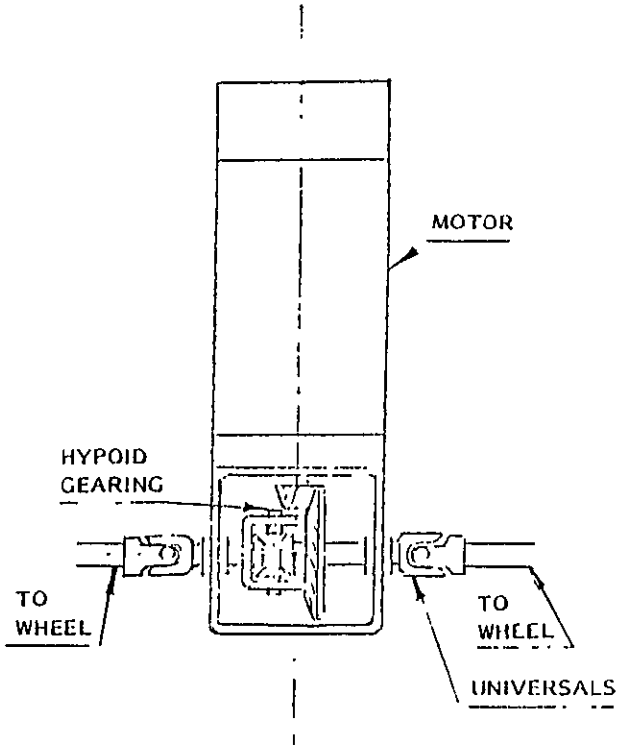

PARAMETERS

. WEIGHT PENALTY	0
. TRANSMISSION RATIO	4.2:1
. TRANSMISSION EFFICIENCY	0.92
. DIFFERENTIAL RATIO	1.0
. DIFFERENTIAL EFFICIENCY	1.0

RANGE

. SAE J227a/D	30-36 MILES
. 55 MPH	47 MILES
. 30 MPH, 10% GRADE	4.3 MILES

ADVANTAGES

- SIMPLE, COMMONLY USED CONSTRUCTION
- LIGHTWEIGHT

DISADVANTAGES

- LIMITS VEHICLE RANGE DUE TO POOR MATCHING WITH MOTOR EFFICIENCY CHARACTERISTICS.
- HYPOID GEARING EFFICIENCY IS A SOURCE OF SIGNIFICANT POWER LOSS.
- EFFICIENCY SENSITIVE TO LUBRICANT TEMPERATURE.

ORIGINAL PAGE IS
OF POOR QUALITY

CASE 2

FIXED RATIO REDUCTION, HIGH EFFICIENCY CHAIN DRIVE

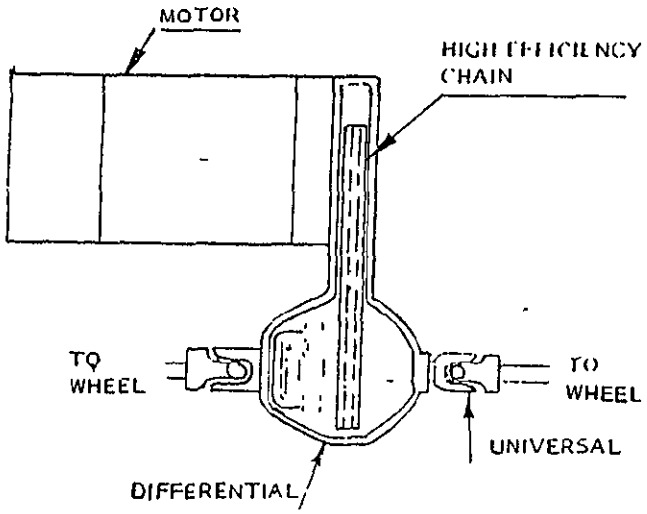

PARAMETERS

. WEIGHT PENALTY	0
. TRANSMISSION RATIO	4.2:1
. TRANSMISSION EFFICIENCY	0.98
. DIFFERENTIAL RATIO	1.0
. DIFFERENTIAL EFFICIENCY	1.0

RANGE

. SAE J227a/D	31-41 MILES
. 55 MPH	51 MILES
. 30 MPH, 10% GRADE	4.6 MILES

ADVANTAGES

- SIMPLE CONSTRUCTION
- HIGH EFFICIENCY FIXED RATIO REDUCTION
- EFFICIENCY RELATIVELY INSENSITIVE TO TEMPERATURE

DISADVANTAGES

- LIMITS RANGE DUE TO POOR MATCHING WITH MOTOR EFFICIENCY CHARACTERISTICS.

ORIGINAL PAGE IS OF POOR QUALITY

CASE 3

DUAL MOTOR DRIVE, FIXED REDUCTION

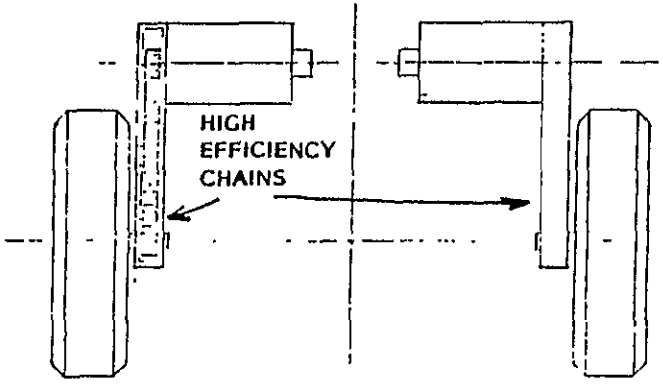

PARAMETERS

. WEIGHT PENALTY	- 100 LBS
. TRANSMISSION RATIO	4.2:1
. TRANSMISSION EFFICIENCY	0.98
. DIFFERENTIAL RATIO	1 0
. DIFFERENTIAL EFFICIENCY	1.0

RANGE

. SAE J227a/D	32-42 MILES
. 55 MPH	51 MILES
. 30 MPH, 10% GRADE	4.8 MILES

ADVANTAGES

LIGHTWEIGHT DRIVE TRAIN RESULTING IN IMPROVED VEHICLE RANGE COMPARED TO A SINGLE MOTOR.

HIGH EFFICIENCY CHAIN DRIVE

. DUAL MOTORS PROVIDE DIFFERENTIAL ACTION

DISADVANTAGES

. TWO MOTORS ARE REQUIRED

TWO SMALL MOTORS MAY BE LESS EFFICIENT THAN ONE LARGE ONE

FIXED RATIO LIMITS RANGE DUE TO POOR MATCHING WITH MOTOR EFFICIENCY CHARACTERISTICS.

CASE 4

STANDARD 3 SPEED AUTOMATIC TRANSMISSION WITH A TORQUE CONVERTER

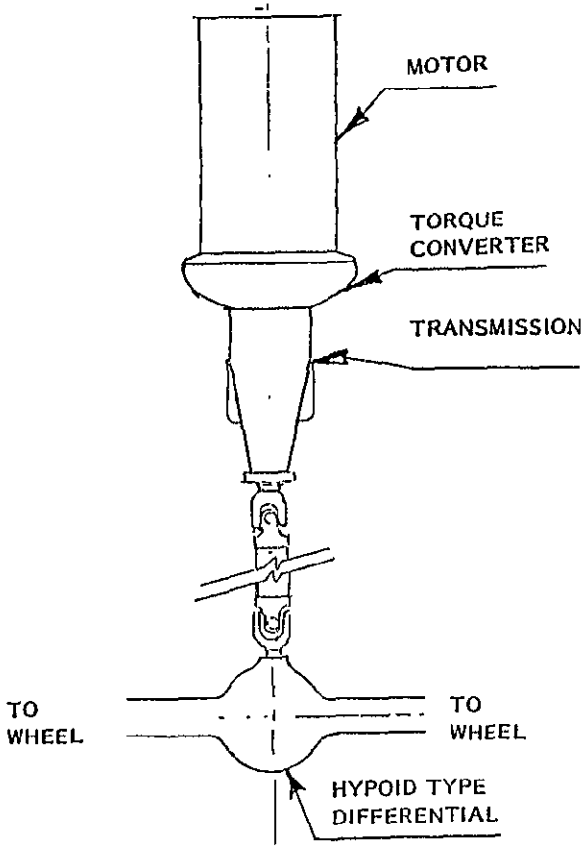

PARAMETERS

.	WEIGHT PENALTY	+150 LBS
.	TRANSMISSION RATIO	3.5:1 (0-20 MPH) 1.7:1 (20-35 MPH) 1.0.1 (ABOVE 35 MPH)
.	TRANSMISSION EFFICIENCY	0.70 (0-20 MPH) 0.88 (20-35 MPH) 0.92 (ABOVE 35 MPH)
.	DIFFERENTIAL RATIO	4.2 1
.	DIFFERENTIAL EFFICIENCY	0.92

RANGE

.	SAE J227a/D	25-39 MILES
.	55 MPH	44 MILES
.	30 MPH, 10% GRADE	4.9 MILES

ADVANTAGES

. AVAILABLE MULTI-RATIO TRANSMISSION WITH AUTOMATIC SPEED CHANGE.

DISADVANTAGES

. LOW EFFICIENCY COMPARED TO OTHER TRANSMISSION TYPES DUE TO INTERNAL PUMP LOSSES OF 1-3 HP (DEPENDING ON VEHICLE SPEED).

EFFICIENCY SENSITIVE TO TEMPERATURE CHANGE.

. TORQUE CONVERTER ADDS SIGNIFICANT LOSSES TO THE DRIVE TRAIN DURING BOTH ACCELERATION AND CONSTANT VELOCITY OPERATION

. LOW PROBABLE VEHICLE RANGE.

ORIGINAL PAGE IS OF POOR QUALITY

CASE 5

3 SPEED AUTOMATIC TRANSMISSION CHAIN COUPLED TO THE DIFFERENTIAL WITHOUT TORQUE CONVERTER

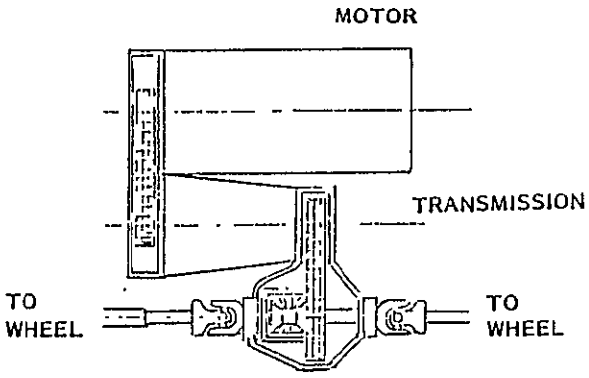

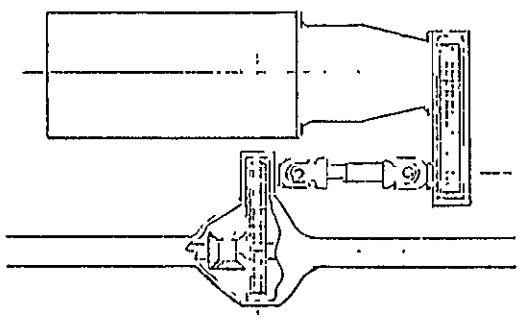

ALTERNATE CONSTRUCTION

PARAMETERS

.	WEIGHT PENALTY	+100 LBS
.	TRANSMISSION RATIO	2.74.1 (0-20 MPH) 1.57.1 (20-35 MPH) 1.0:1 (ABOVE 35 MPH)
.	TRANSMISSION EFFICIENCY	0.76 (0-20 MPH) 0.80 (20-35 MPH) 0.82 (ABOVE 35 MPH)
.	DIFFERENTIAL RATIO	5.0.1
.	DIFFERENTIAL EFFICIENCY	0.98

RANGE

	SAE J227a/D	28-42 MILES
.	55 MPH	42 MILES
.	30 MPH, 10% GRADE	4.0 MILES

ADVANTAGES

AVAILABLE MULTI-RATIO TRANSMISSION WITH AUTOMATIC SPEED CHANGE.

DISADVANTAGES

- LOW EFFICIENCY COMPARED TO OTHER TRANSMISSION TYPES DUE TO INTERNAL PUMP LOSSES OF 1-3 HP (DEPENDING ON VEHICLE SPEED)
- EFFICIENCY SENSITIVE TO TEMPERATURE CHANGE.
- WHEN COUPLED DIRECTLY TO THE MOTOR, TRANSMISSION LIFE IS SHORT DUE TO EXCESS SHOCK LOADING.

ORIGINAL PAGE IS OF POOR QUALITY

CASE 6

STANDARD 2 SPEED AUTOMATIC TRANSMISSION WITHOUT A TORQUE CONVERTER

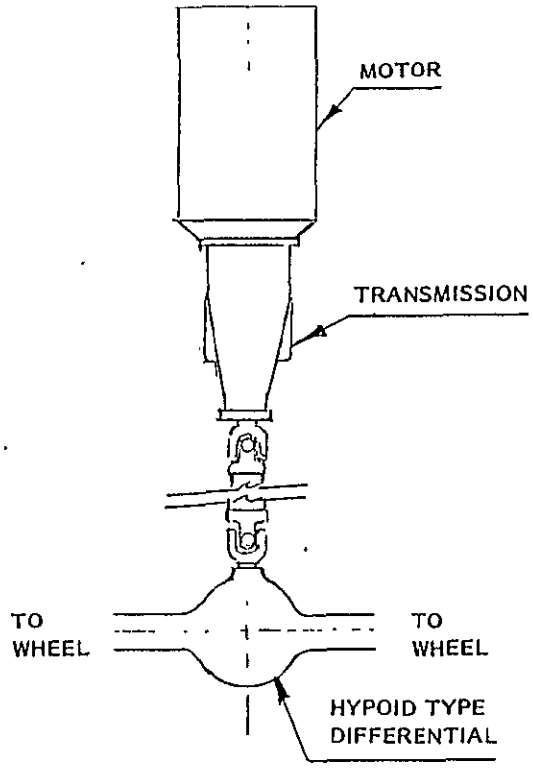

PARAMETERS

. WEIGHT PENALTY	+75 LBS
. TRANSMISSION RATIO	2.74:1 (0-20MPH), 1.0:1 (ABOVE 20MPH)
. TRANSMISSION EFFICIENCY	0.90
. DIFFERENTIAL RATIO	4.2:1
. DIFFERENTIAL EFFICIENCY	0.92

RANGE

. SAE J227a/D	31-40 MILES
. 55 MPH	46 MILES
30 MPH, 10% GRADE	4.2 MILES

ADVANTAGES

. AVAILABLE MULTI-RATIO TRANSMISSION WITH AUTOMATIC SPEED CHANGE.

DISADVANTAGES

. LOW EFFICIENCY COMPARED TO OTHER TRANSMISSION TYPES DUE TO INTERNAL PUMP LOSSES OF 1-3 HP (DEPENDING ON VEHICLE SPEED)

EFFICIENCY SENSITIVE TO TEMPERATURE CHANGE

IF DIRECTLY COUPLED TO THE MOTOR, TRANSMISSION LIFE IS VERY SHORT DUE TO EXCESSIVE SHOCK LOADING IN FIRST GEAR

CASE 7

TORQUE CONVERTER COUPLED DIRECTLY TO A DIFFERENTIAL

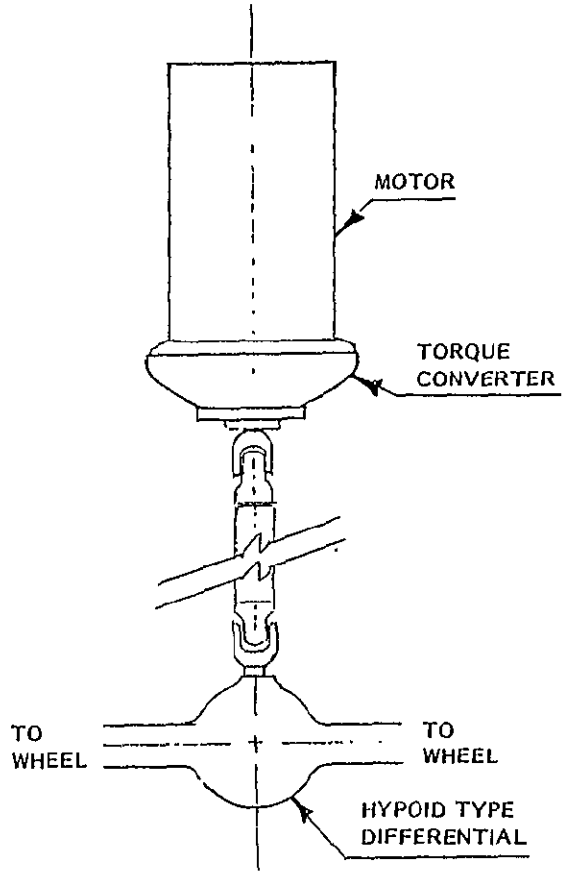

PARAMETERS

.	WEIGHT PENALTY	+50 LBS
.	TRANSMISSION RATIO	10.1 (0-2.5 MPH) 2.5 1 (2.5 - 5 MPH) 1.25.1 (5-10 MPH) 1 05: 1 (ABOVE 10 MPH)
	TRANSMISSION EFFICIENCY	0.20 (0-2.5MPH), 0 65 (2.5-5 MPH) 0.91 (5-10 MPH) 0.95 (ABOVE 10 MPH)
.	DIFFERENTIAL RATIO	4.2·1
	DIFFERENTIAL EFFICIENCY	0.92

RANGE

	SAE J227a/D	30-36 MILES
.	55 MPH	48 MILES
.	30 MPH, 10% GRADE	4.4 MILES

ADVANTAGES

FORMS A VARIABLE RATIO TRANSMISSION WHICH ALLOWS THE MOTOR TO OPERATE AT HIGHER, MORE EFFICIENT SPEEDS AT LOW VEHICLE SPEEDS

DISADVANTAGES

. NO NET GAIN IN PERFORMANCE COMPARED TO A SYSTEM WITHOUT THE TORQUE CONVERTER

ORIGINAL PAGE IS OF POOR QUALITY

CASE 8

HYPOTHETICAL INFINITELY VARIABLE SPEED TRANSMISSION, ROLLING ELEMENT TYPE

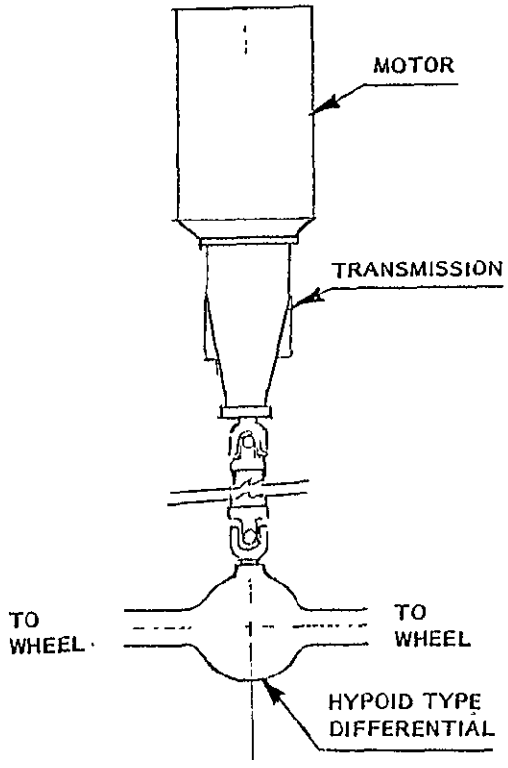

PARAMETERS

.	WEIGHT PENALTY	+200 LBS
.	TRANSMISSION RATIO	32.4:1 (0-2.5 MPH) 16.2:1 (2.5-5.0 MPH) 8.1:1 (5.0-10 MPH) 5.76:1 (10-20 MPH) 1.68:1 (20-30 MPH) 1.0:1 (ABOVE 30 MPH)
.	TRANSMISSION EFFICIENCY	0.76 (0-2.5 MPH) 0.86 (2.5-5.0 MPH) 0.90 (5.0-10 MPH) 0.91 (10-20 MPH) 0.92 (20-30 MPH) 0.93 (ABOVE 30 MPH)
.	DIFFERENTIAL RATIO	4.2:1
.	DIFFERENTIAL EFFICIENCY	0.92

RANGE

	SAE J227a/D	29-35 MILES
.	55 MPH	45 MILES
.	30 MPH, 10% GRADE	5.2 MILES

ADVANTAGES

DRIVE TRAIN CAN BE IDEALLY MATCHED WITH THE MOTOR REQUIREMENTS OVER A WIDE RANGE OF TORQUE AND SPEED.

DISADVANTAGES

- NOT AVAILABLE AS A STATE-OF-THE-ART DEVICE.
- PROBABLY SIGNIFICANTLY HEAVIER THAN ALTERNATE MULTISPEED TRANSMISSIONS.

ORIGINAL PAGE IS OF POOR QUALITY

CASE 9

VARIABLE SPEED V BELT TRANSMISSION

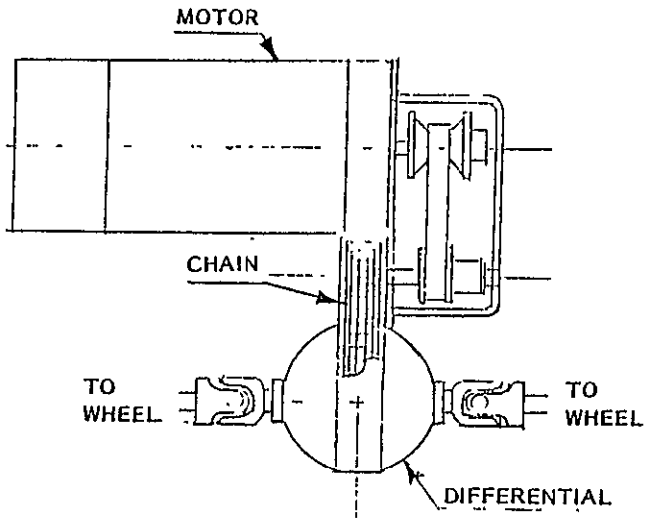

PARAMETERS

. WEIGHT PENALTY	+100 LBS
. TRANSMISSION RATIO	4.8:1 (0-10 MPH) 4.0:1 (10-20 MPH) 3.0 1 (20-30 MPH) 2.0.1 (30-40 MPH) 1.0:1 (ABOVE 40 MPH)
. TRANSMISSION EFFICIENCY	0.90
. DIFFERENTIAL RATIO	4.2.1
. DIFFERENTIAL EFFICIENCY	0.99

RANGE

. SAE J227a/D	33-46 MILES
. 55 MPH	45 MILES
. 30 MPH, 10% GRADE	5.7 MILES

ADVANTAGES

VARIABLE SPEED TRANSMISSION MAXIMIZES OPERATION OF THE DRIVE MOTOR AT EFFICIENT SPEED/TORQUE RANGES DURING THE DRIVING CYCLE.

- CLAIMED EFFICIENCIES OF 86-94%, RELATIVELY CONSTANT WITH SPEED.
- ELECTRICAL ACTUATION COMPATIBLE WITH SCR CONTROL SYSTEM
- MINIMIZES CURRENT DEMAND BY PROVIDING HIGH WHEEL TORQUE AT LOW VEHICLE SPEEDS.
- EFFICIENCY RELATIVELY INSENSITIVE TO AMBIENT TEMPERATURE.

DISADVANTAGES

- MORE COMPLEX THAN A FIXED RATIO DRIVE.
- NO COMPREHENSIVE DOCUMENTATION ON RELIABILITY AND PERFORMANCE.

CASE 10

2 SPEED TRANSMISSION USING ELECTRICALLY OPERATED CLUTCHES

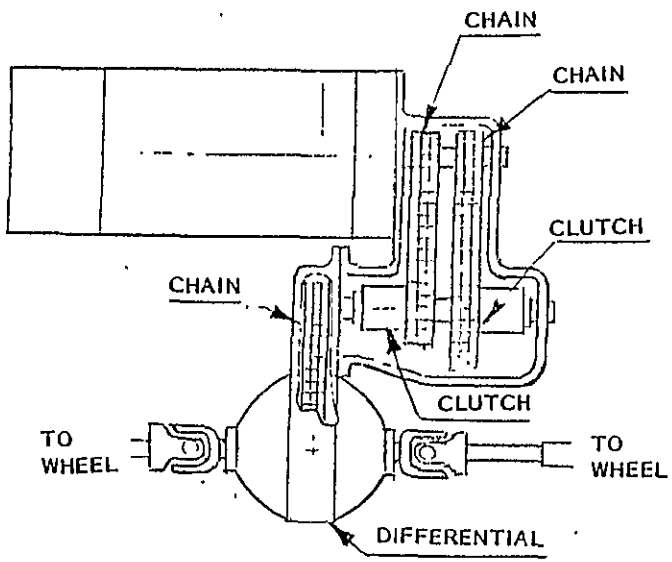

ALTERNATE: HELICAL GEARING IN PLACE OF CHAINS

PARAMETERS

. WEIGHT PENALTY	+100 LBS
. TRANSMISSION RATIO	4 0.1 (0-20 MPH) 1.0.1 (ABOVE 20 MPH)
. TRANSMISSION EFFICIENCY	0.92
. DIFFERENTIAL RATIO	4.5.1
. DIFFERENTIAL EFFICIENCY	0.98

RANGE

. SAE J227a/D	32.5-45 MILES
. 55 MPH	49 MILES
30 MPH, 10% GRADE	4.5 MILES

ADVANTAGES

. HIGHLY EFFICIENT TRANSMISSION. ELECTRIC CLUTCHES REQUIRE .07 HP.

. HIGHER PROBABLE VEHICLE RANGE COMPARED TO FIXED RATIO DRIVES

LOW GEAR ALLOWS MORE EFFICIENT OPERATION OF THE MOTOR DURING LOW SPEED OPERATION

EFFICIENCY RELATIVELY INSENSITIVE TO AMBIENT TEMPERATURE.

. 3 SPEED OPTIONS

DISADVANTAGES

NOT PROVEN IN CURRENT VEHICLES

MORE COMPLEX THAN A FIXED RATIO DRIVE.

ORIGINAL PAGE IS OF POOR QUALITY

RANKING OF CALCULATED PERFORMANCE

RANGE OVER SAE CYCLE (MILES/CASE)	RANGE AT 55 MPH (MILES/CASE)	RANGE AT 30 MPH, 10% GRADE (MILES/CASE)	PEAK CURRENT (AMPERES/CASE)
33-46/9	51/2, 3	5.7/9	375/9
32.5-45/10	49/10	5.2/8	400/5
32-42/3	48/7	4.9/4	425/4
31-41/2	47/1	4.8/3	450/10

THE SELECTION OF THE ELECTROMATIC DRIVE TRANSMISSION FOR THE STATE-OF-THE-ART POWER TRAIN IS BASED ON:

- High Calculated Range
- Good Efficiency (≈90%)
- Low Weight and Compact (40 lbs.)
- Potentially Reliable
- Electrically Controllable
- Emerging in Market Place
- Well Suited to Transaxle Configuration

DRIVE TRAIN UTILIZING THE "V" BELT TRANSMISSION

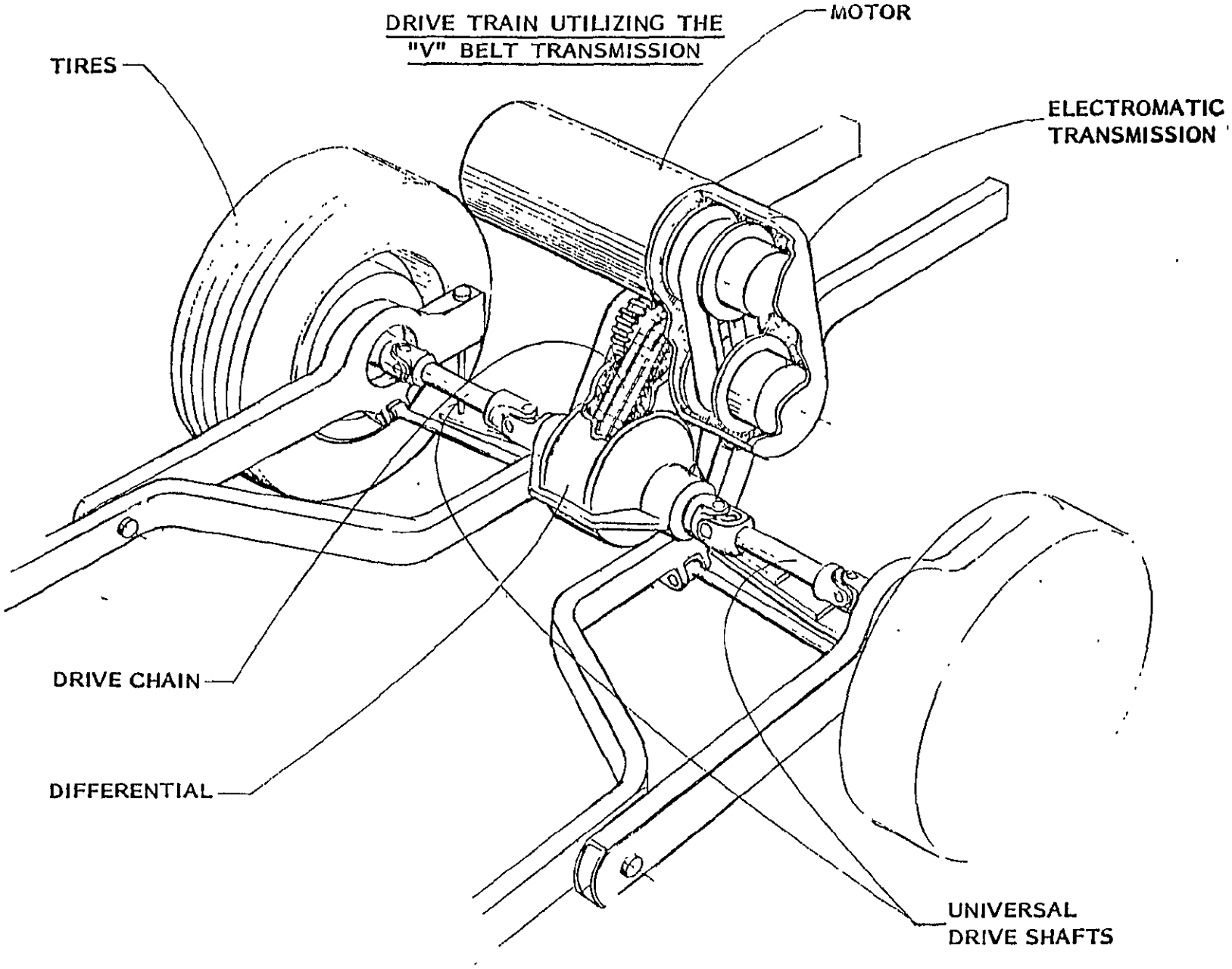

ORIGINAL PAGE IS OF POOR QUALITY

DRIVE TRAIN INSTALLATION IN A TYPICAL VEHICLE CONFIGURATION

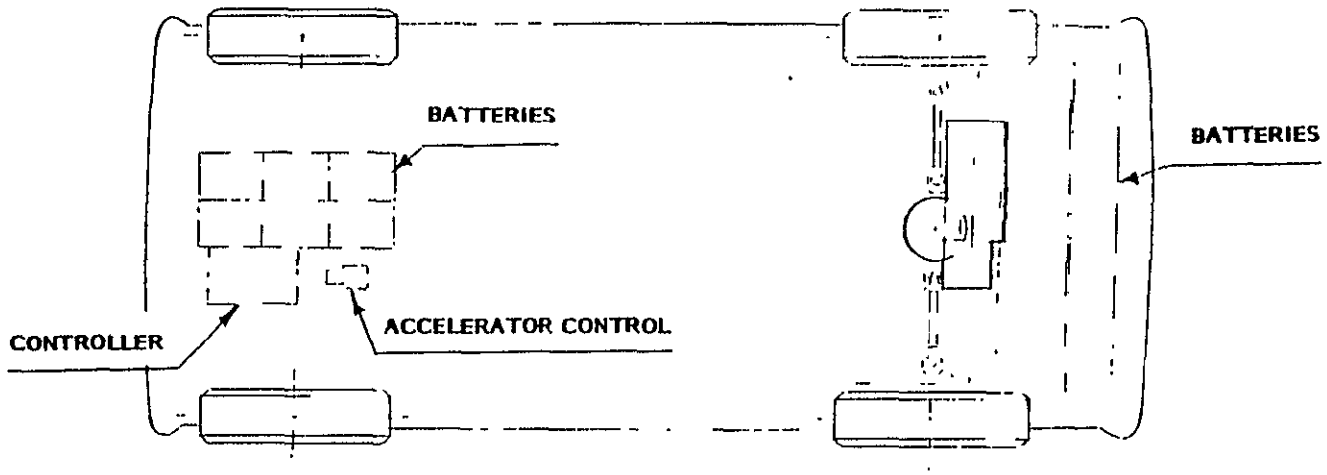

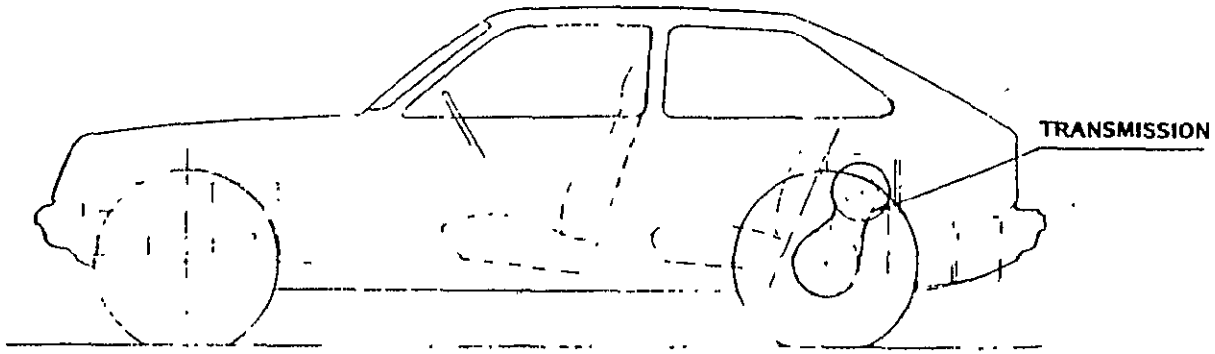

ORIGINAL PAGE IS
OF POOR QUALITY

PREDICTED RANGE OF THE STATE-OF-THE-ART POWER TRAIN (650 lbs.)

Cycle	Range
SAE J227a/D	36-50
55 MPH	47
30 MPH, 10% Grade	6.2

IV. IMPROVED POWER TRAINS

1. BY APPLYING NEAR-TERM TECHNICAL ADVANCES, IMPROVED POWER TRAIN DESIGNS WILL INCREASE VEHICLE RANGE.

(1) Use a Separately Excited DC Motor

(2) Reduce Vehicle Weight by Using Lightweight Materials in the Power Train Components.

(3) Develop Tires Specifically Designed for the Electric Vehicle Application.

(4) Design an Integral Motor/Transmission Package.

(5) Increase Battery Mass Fraction.

(6) Change Battery Voltage.

(7) Use an AC Motor and Controller.

(8) Incorporate Supplemental Load Leveling Batteries.

(9) Use Batteries With Higher Energy Density.

(10) Use Flywheels for Load Leveling.

COMPARISON OF POTENTIAL IMPROVEMENT AREAS

Evaluation Task Area	State-of the-Art	Improved Range	Development Risk	Technical Feasibility	Commercial-ization Potential	Estimated Program Effort	Comments
1. Separately excited DC motor	Near	Unknown	Moderate	Yes	Yes	Moderate	Improved motor/transmission match. Verify efficiency.
2. Component weight reduction	Current	Yes	Low	Yes	Yes	Moderate	
3. Electric vehicle tires	Near	Yes	Low	Yes	Yes	High	
4. Integral motor/transmission	Current	None	Low	Yes	Yes	Moderate	Specific to packaging. Possible weight savings.
5. Increase battery mass fraction	Now	Yes	?	?	Yes	---	Vehicle impact.
6. Battery voltage change	Near	?	Moderate	?	?	Moderate	Batteries?
7. AC motor system	Near	None	High	?	?	High	
8. Supplemental load leveling batteries	Advanced	?	Low	?	?	High	
9. Improved batteries	Advanced	Yes	High	Yes	Yes	High	
10. Flywheels for load-leveling	Advanced	Yes	High	Yes	?	High	

Source: Booz-Allen & Hamilton Inc.

ORIGINAL PAGE IS OF POOR QUALITY

2. THE USE OF A SEPARATELY EXCITED DC MOTOR, AS COMPARED TO A SERIES MACHINE, CAN IMPROVE THE RANGE OF AN ELECTRIC VEHICLE.

(1) The Power Trains Studied Are Distinguished By Armature Control, Field Control or the Incorporation of the Electromatic CVT.

(2) An Iterative Simulation With Empirically Adjusted Efficiency Models Was Used To Investigate the Performance Of the Separately Excited Motor Systems.

(3) The Computer Analysis Predicted That the Range Over the SAE Cycle With a Separately Excited Motor is 20% Greater Than With a Comparable Series Motor.

(4) The All Electrical Motor Control Scheme Represents the Most Viable Near-Term Design Approach.

SEPARATELY EXCITED DC MOTOR

COMPUTER SIMULATION TRADE-OFF STUDY

- TRIAD iterative model
- Constant current during acceleration
- 3,600 pound vehicle
- Vehicle parameters
  - Effective frontal area = 6 ft^2
  - Tire radius = 12.6 inches
  - Rolling resistance = 0.01 lb./lb.
- 96 percent chopper efficiency
- Shunt wound version of Prestolite EO-26747 motor
- Realistic CVT model
- Deceleration limited to 0.1 G.

ELECTROMATIC CVT EFFICIENCY

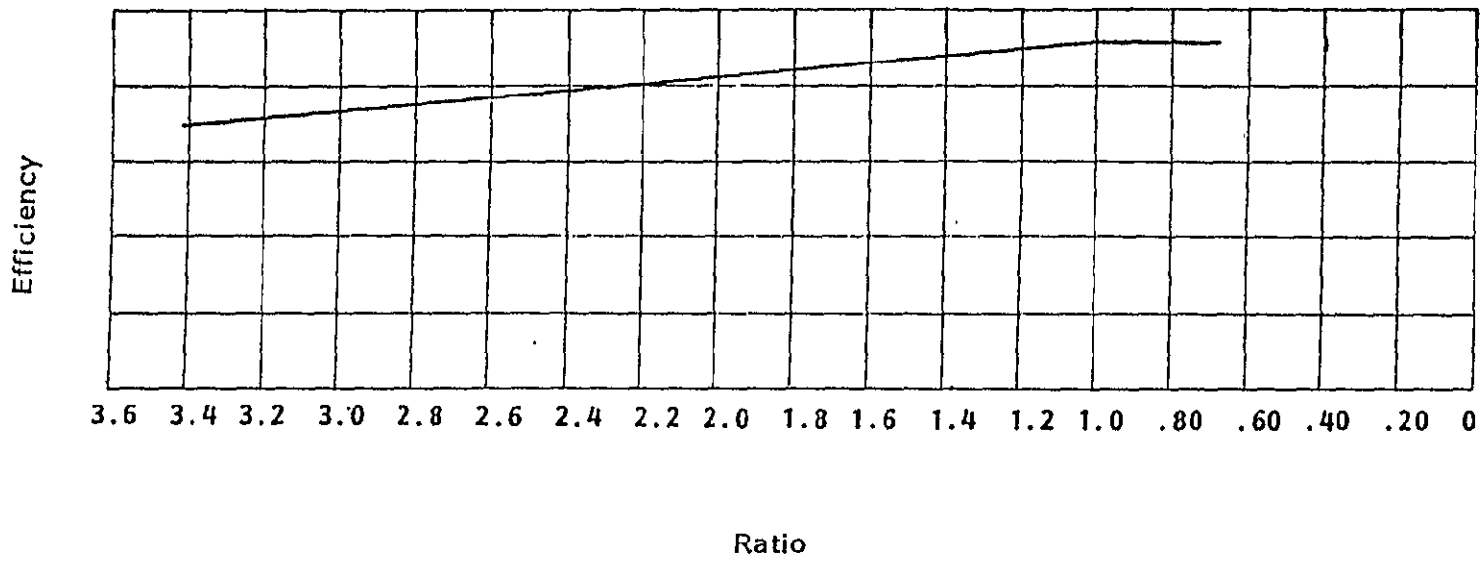

Source: Booz-Allen & Hamilton Inc.

CASE 9 PERFORMANCE

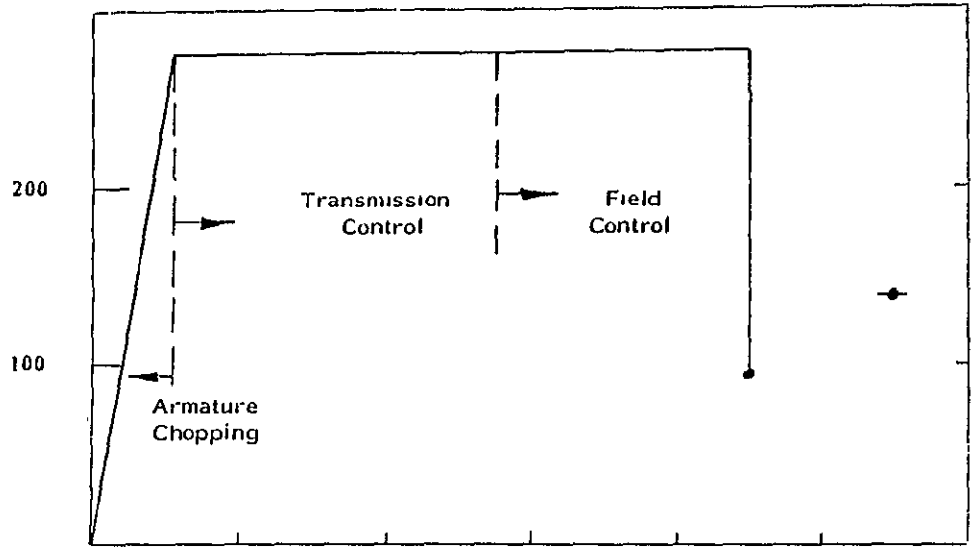

Motor - Separately excited
Control - Armature and field
Transmission - CVT

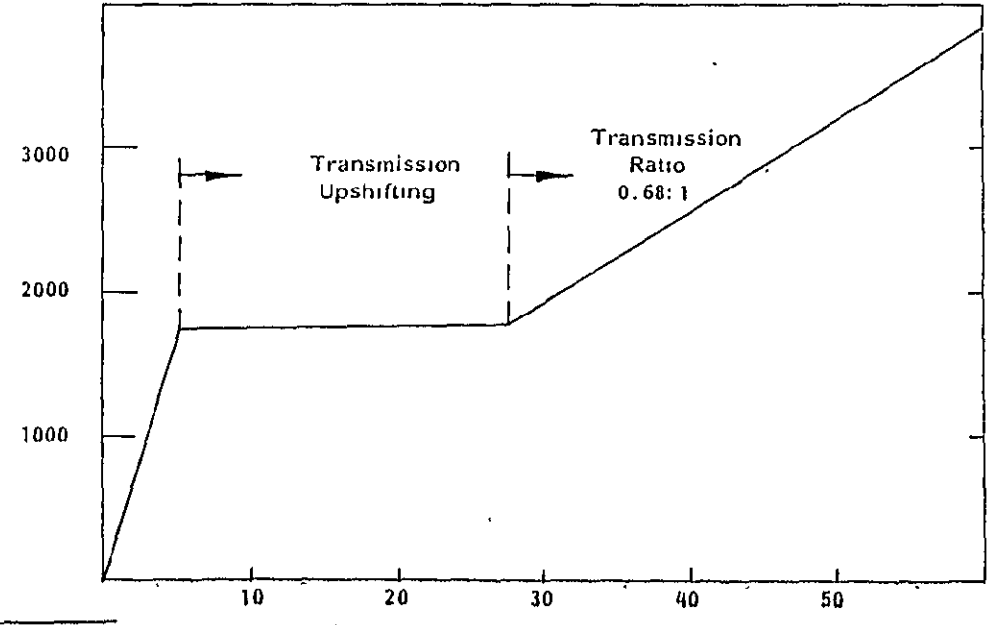

Source: Booz, Allen & Hamilton Inc.

ORIGINAL PAGE IS OF POOR QUALITY

CASE 11 - FULL CONTROL

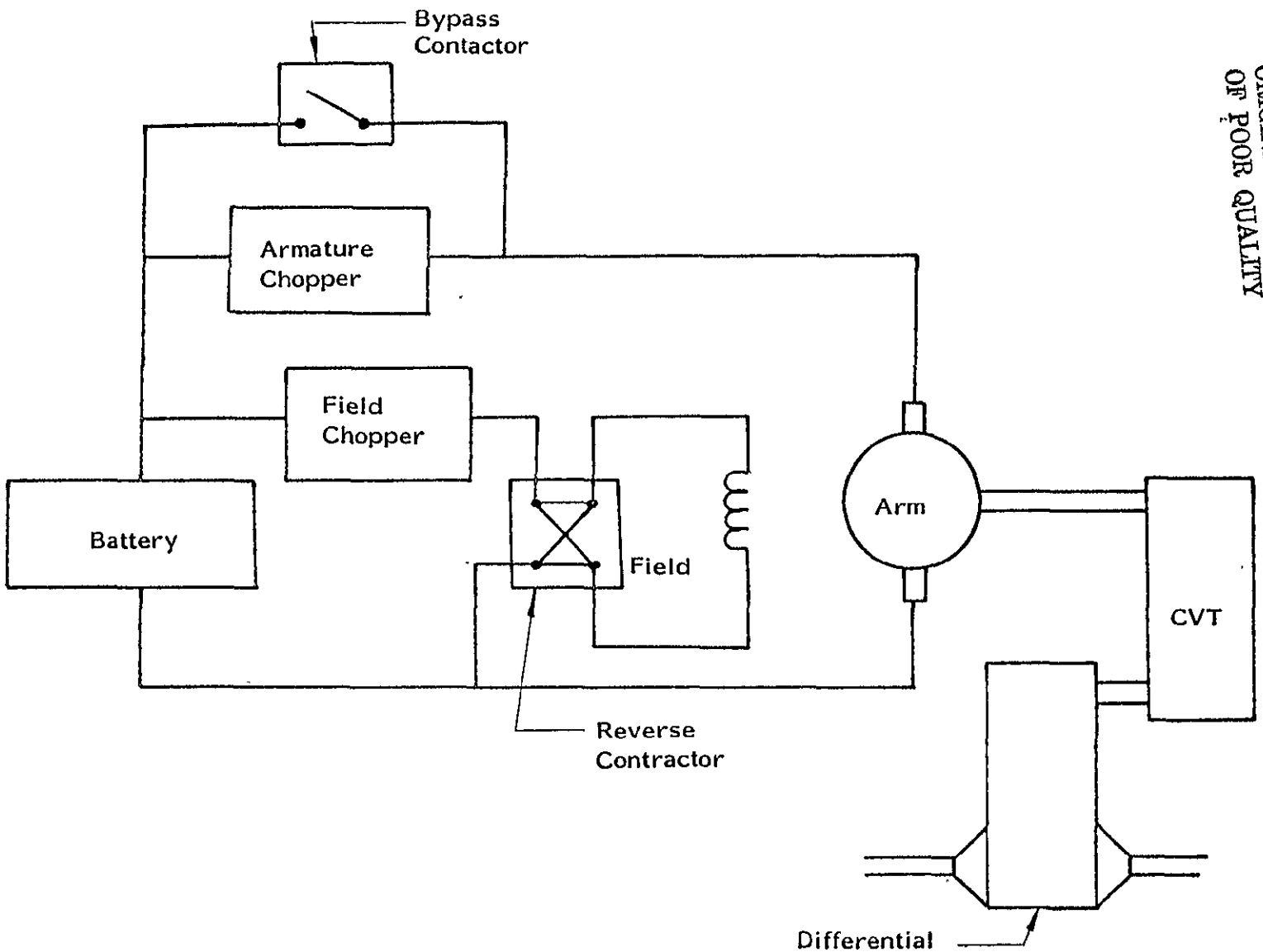

ORIGINAL PAGE IS
OF POOR QUALITY

CASE 11 PERFORMANCE

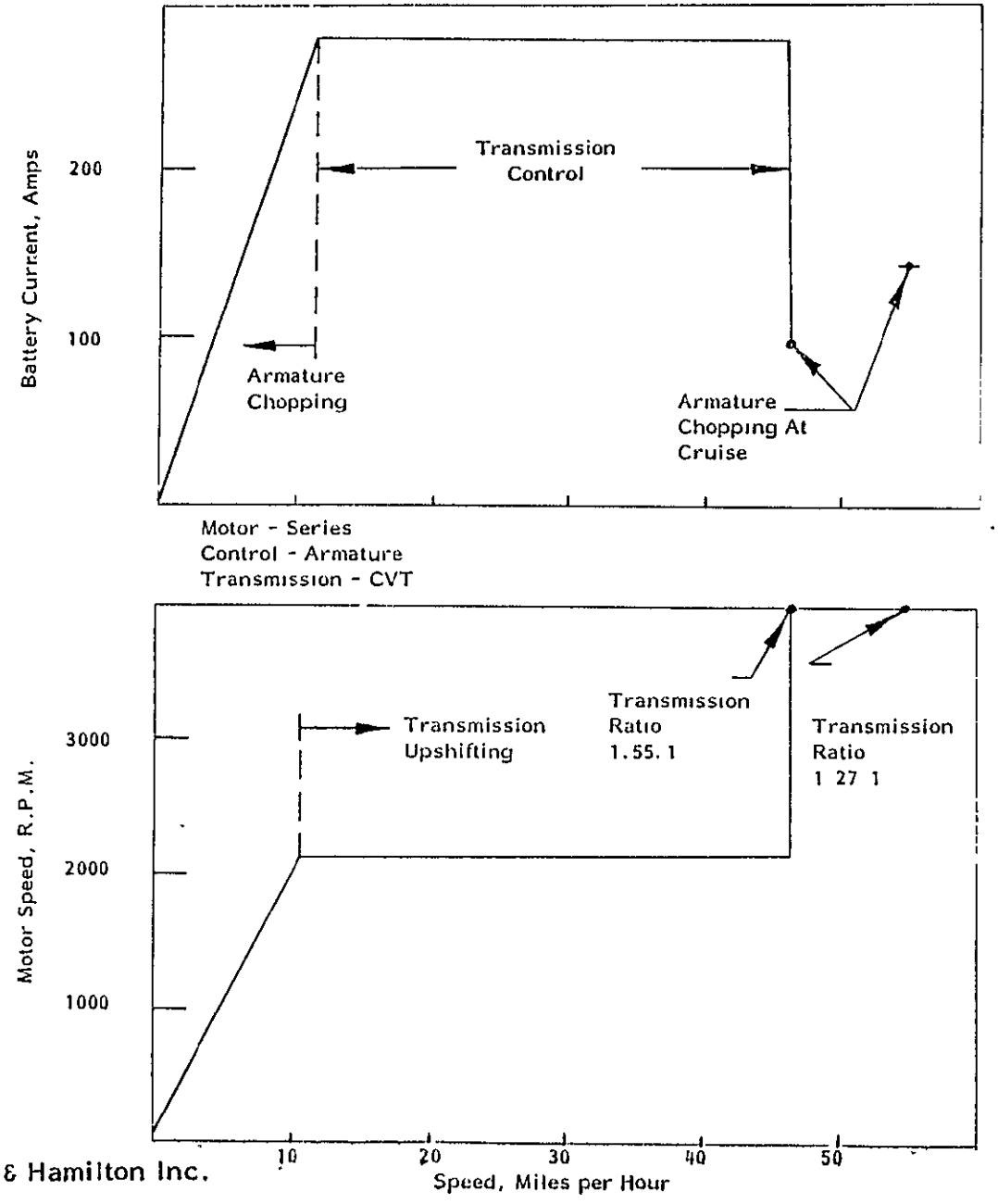

ORIGINAL PAGE IS OF POOR QUALITY

Source: Booz-Allen & Hamilton Inc.

CASE 12 - FIRED ARMATURE

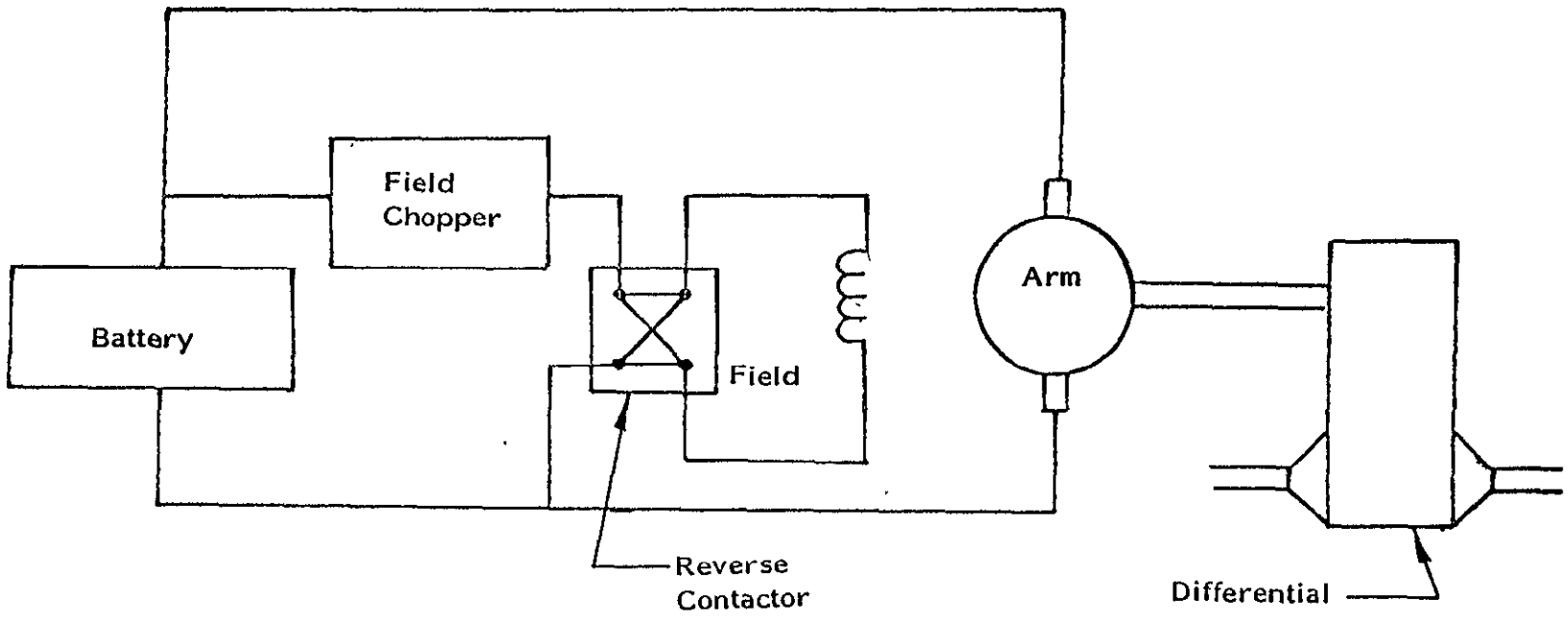

CASE 12 PERFORMANCE

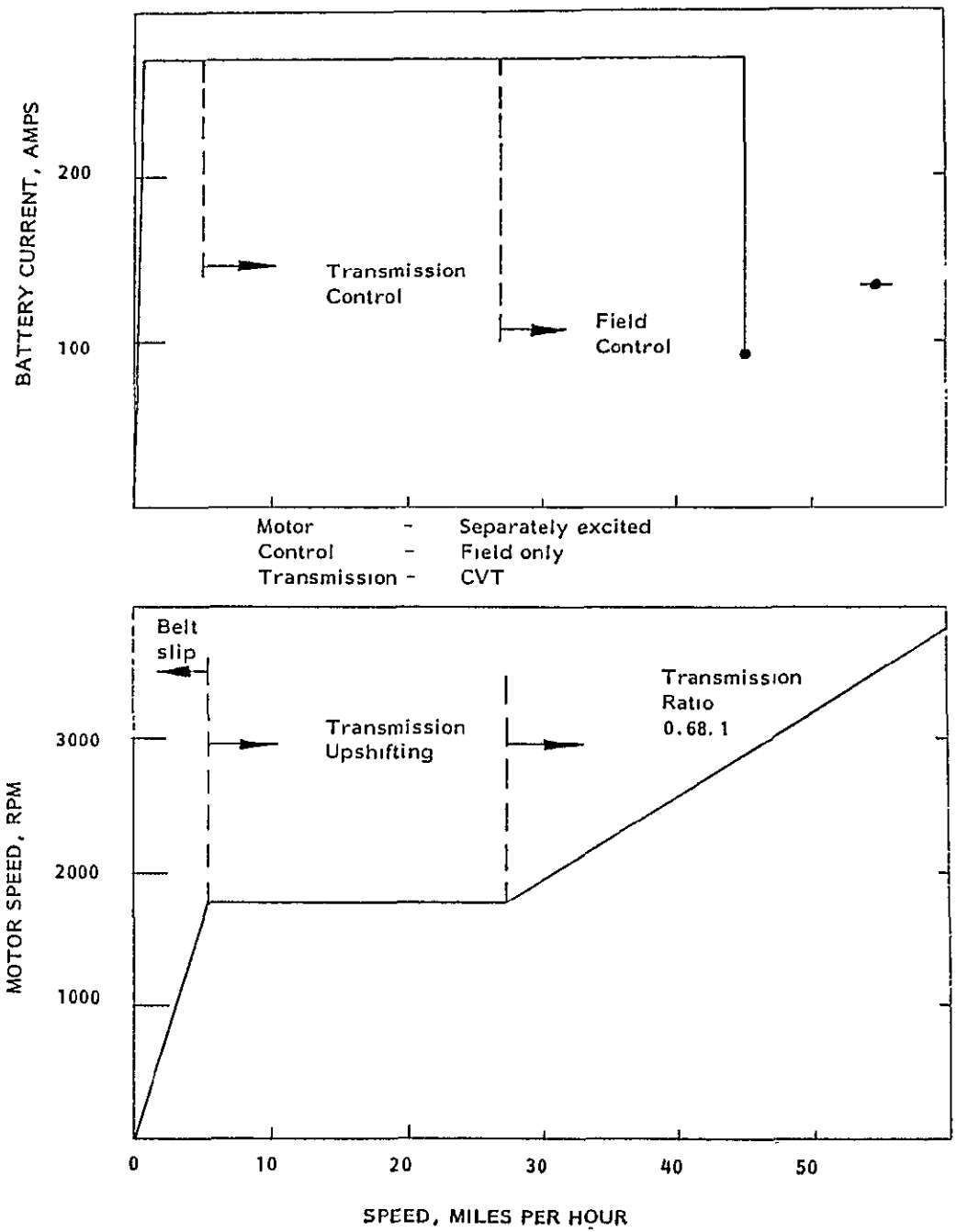

Source: Booz, Allen & Hamilton Inc.

ORIGINAL PAGE IS OF POOR QUALITY

CASE 13 - FIXED FIELD

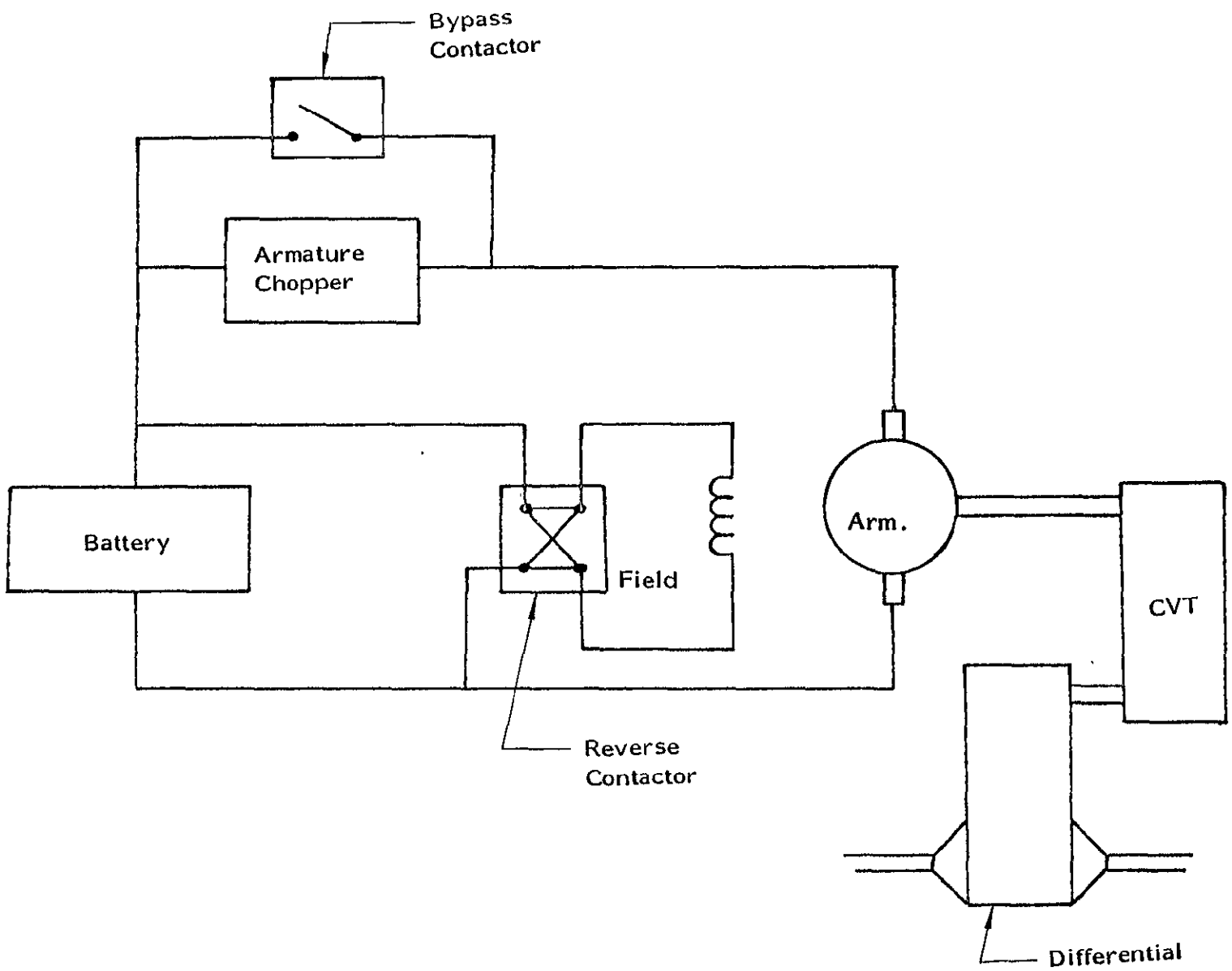

CASE 13 PERFORMANCE

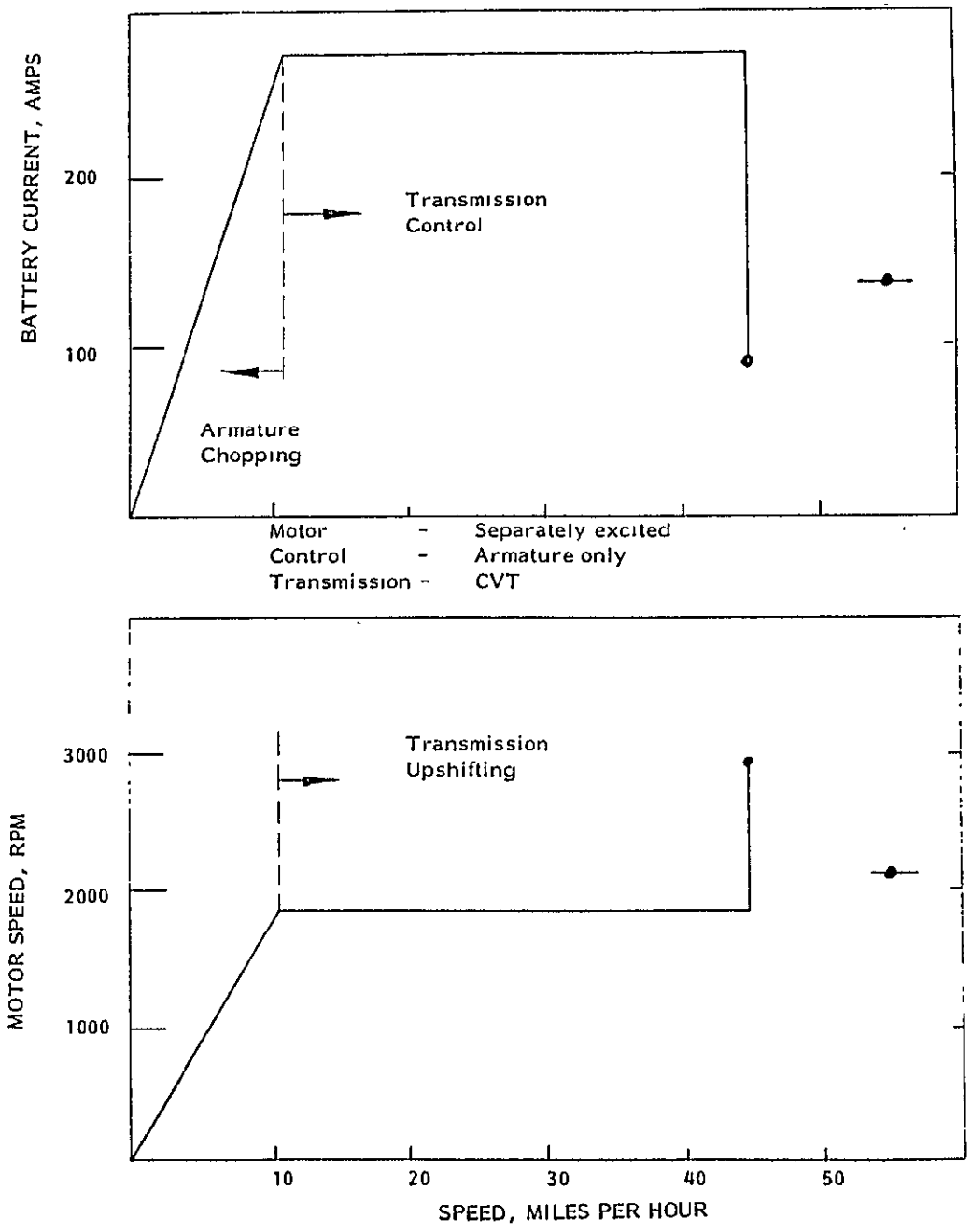

Source: Booz, Allen & Hamilton Inc.

ORIGINAL PAGE IS
OF POOR QUALITY

CASE 14 - "ALL ELECTRIC" CONTROL

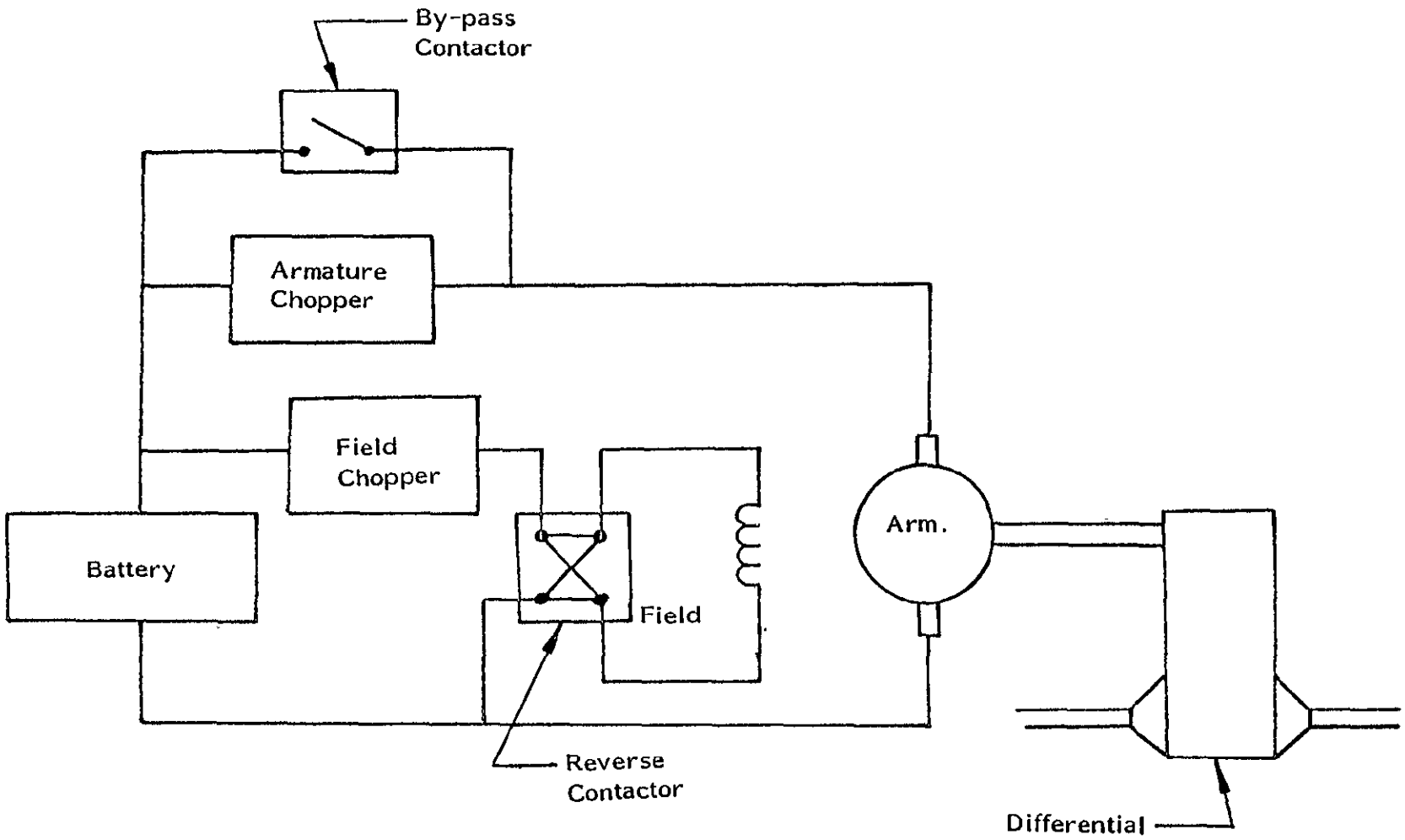

CASE 14 PERFORMANCE

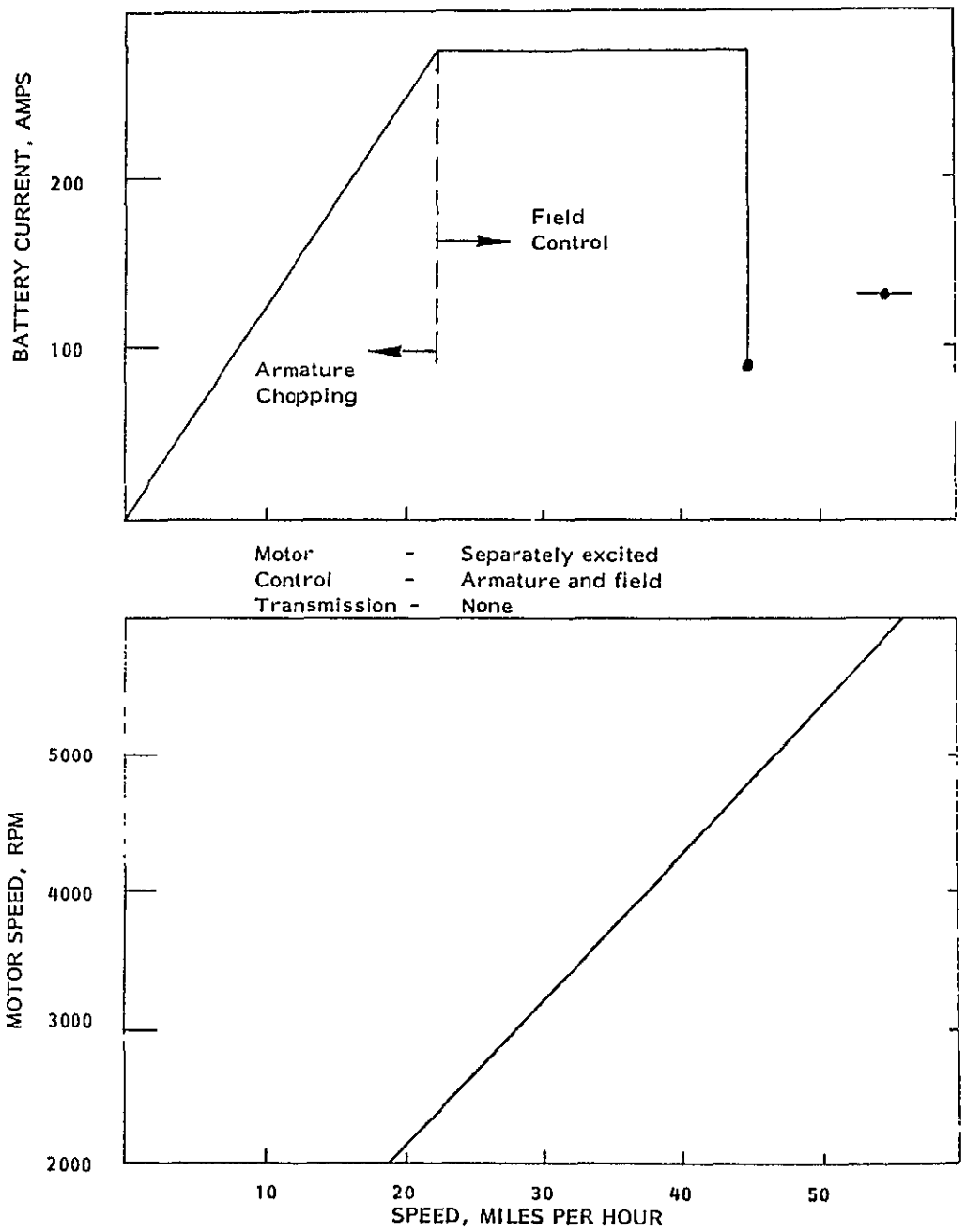

Source: Booz, Allen & Hamilton Inc.

ORIGINAL PAGE IS
OF POOR QUALITY

POWER TRAIN PERFORMANCE WITH SEPARATELY EXCITED MOTOR

	CASE STUDIED				
	9	11	12	13	14
Motor Type	Series	Shunt	Shunt	Shunt	Shunt
Armature Control	Chop	Chop	Fixed	Chop	Chop
Separate Field Control	---	Chop	Chop	Fixed	Chop
Transmission Type	EM/CVT	EM/CVT	EM/CVT	EM/CVT	---
Differential	4.3:1	7:1	7:1	4.2:1	8:1
Range Over SAE J227a/D, 3,600 lb. vehicle (miles)	4000	3491	3491	2094	5870
Motor Speed at 55 mph (RPM)	30	34	33.5	34.5	36.1

Source: Booz-Allen & Hamilton Inc.

RELATIVE EVALUATION OF CANDIDATE SEPARATELY EXCITED MOTOR SYSTEMS

DESCRIPTION	CASE STUDIED			
	9	11	13	14
Motor Type	Series	Shunt	Shunt	Shunt
Armature Control	Chop	Chop	Chop	Chop
Separate Field Control	---	Chop	Fixed	Chop
Transmission	EM/CVT	EM/CVT	EM/CVT	---
Differential	4.3:1	7:1	4.2:1	8:1
Motor Speed at 55 mph (RPM)	4000	3491	2094	5870
Range Over SAE J227a/D Actual Weight (miles)	31.2	35.3	35.9	38.0
Relative Weight (lbs.)	0	+5	0	-35
Reliability	Moderate	Moderate	Moderate	High
Cost	Low	Moderate	Moderate	High
Development Risk	High	High	High	Moderate

3. SEVERAL OTHER IMPROVEMENTS WILL LEAD TO FEATURES WHICH WILL ENHANCE THE SUCCESS OF THE ELECTRIC VEHICLE.

(1) Develop a Brake Blending Control.

(2) Reduce Drive Train Noise.

(3) Assess and Improve Component Reliability.

(4) Assess Safety.

(5) Develop Efficient and Reliable Automatic Transmissions.

ELECTROMAGNETIC TRANSMISSION

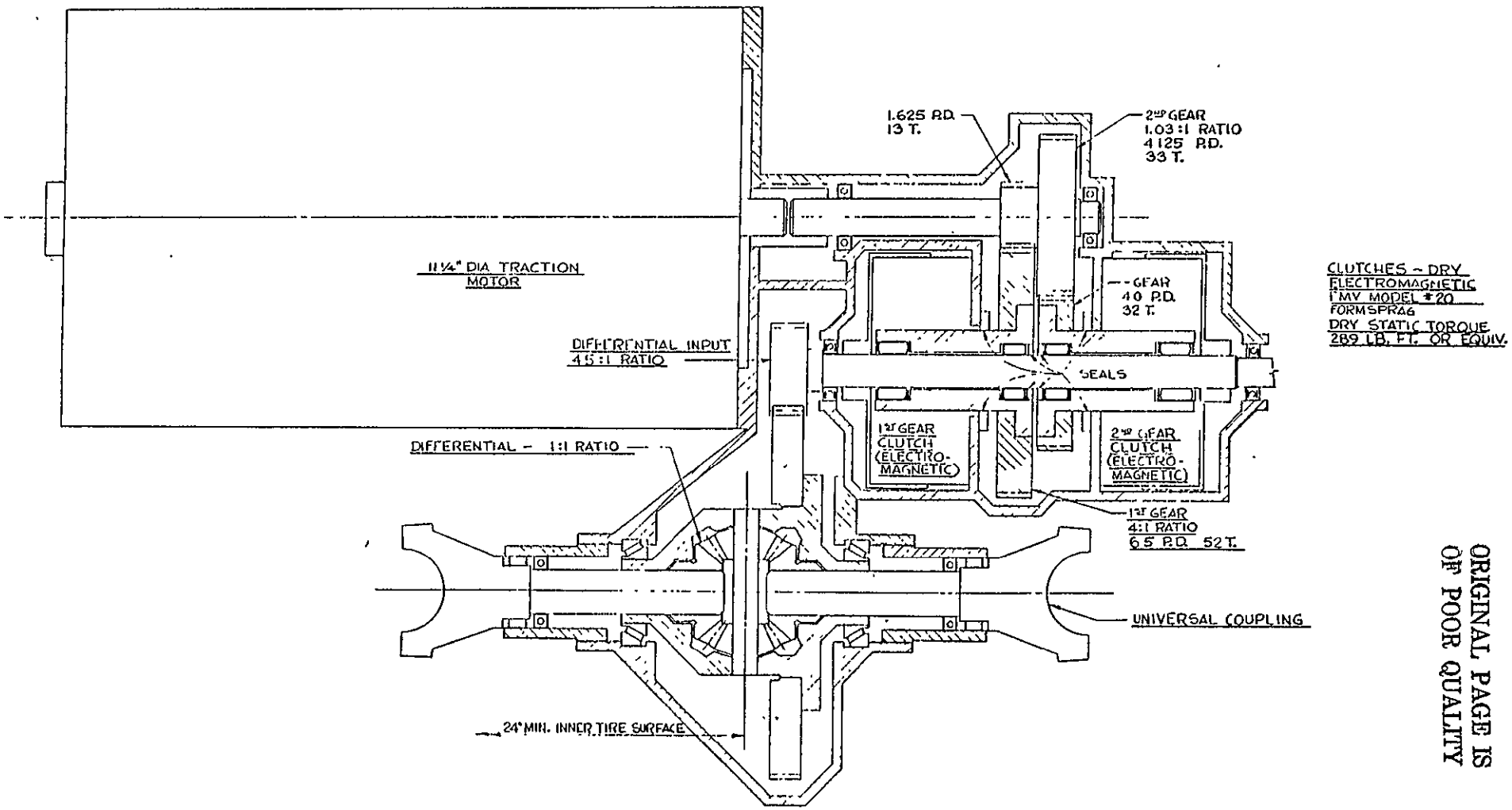

ORIGINAL PAGE IS OF POOR QUALITY

ELECTROMAGNETIC TRANSMISSION
INSTALLED IN A TYPICAL
VEHICLE CONFIGURATION

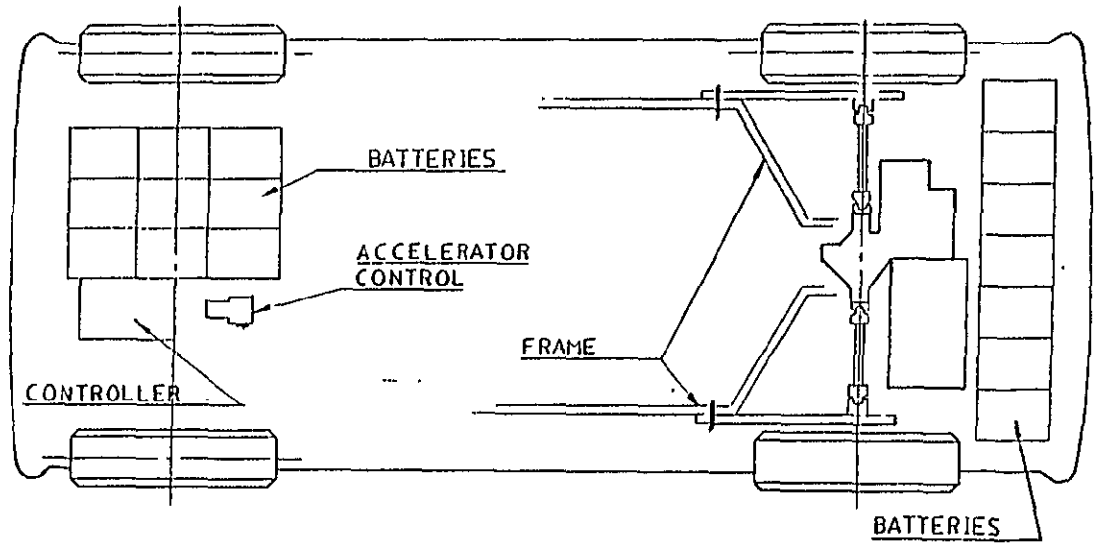

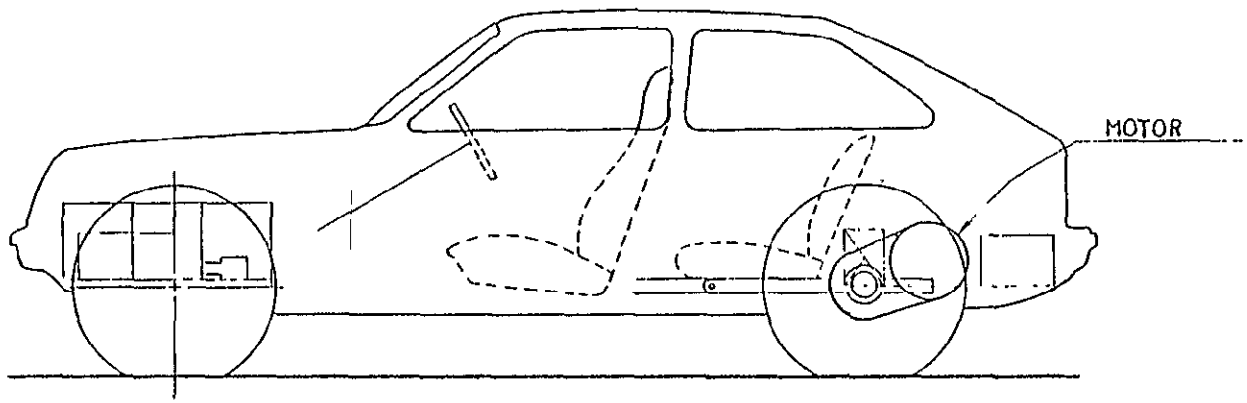

ORIGINAL PAGE IS
OF POOR QUALITY

POWER FLOW IN THE ELECTROMAGNETIC TRANSMISSION

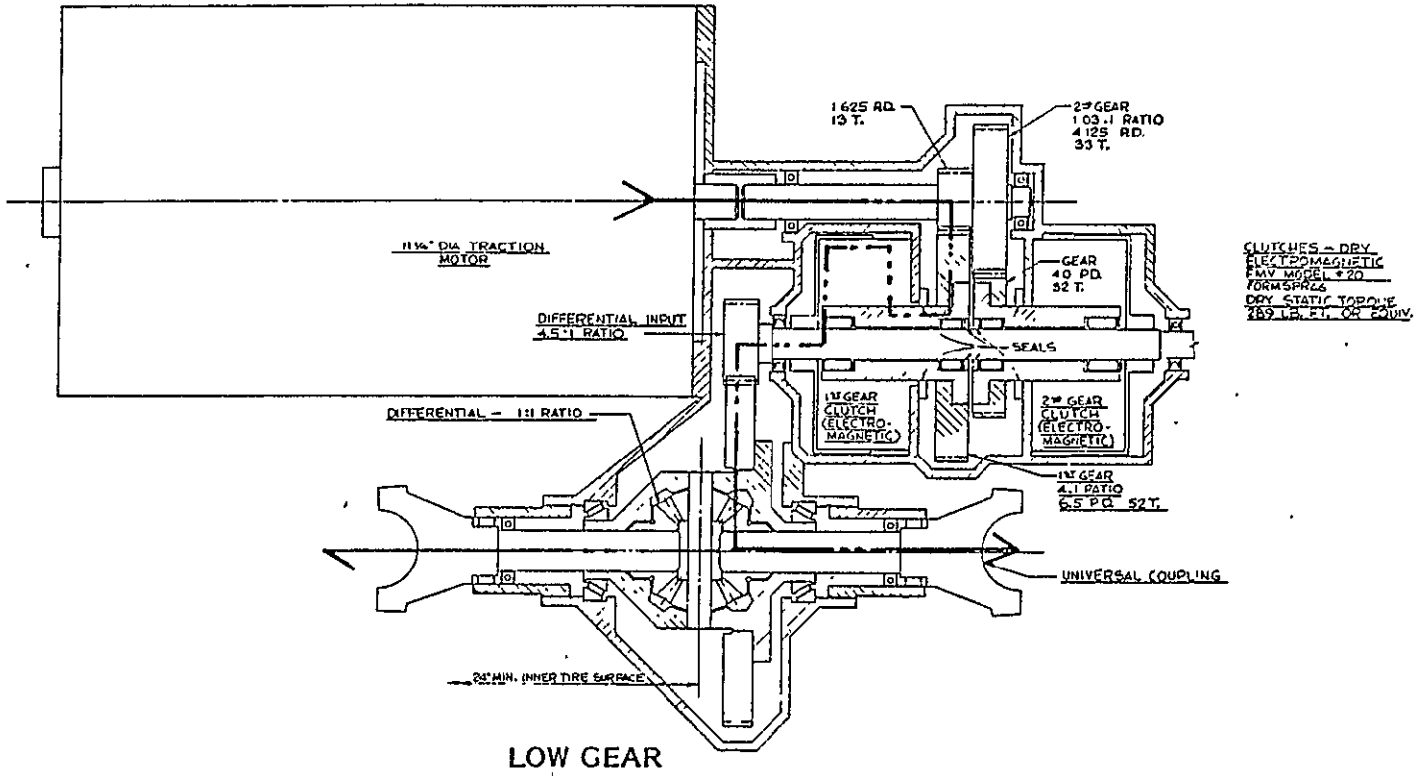

LOW GEAR

ORIGINAL PAGE IS OF POOR QUALITY

POWER FLOW IN THE ELECTROMAGNETIC TRANSMISSION

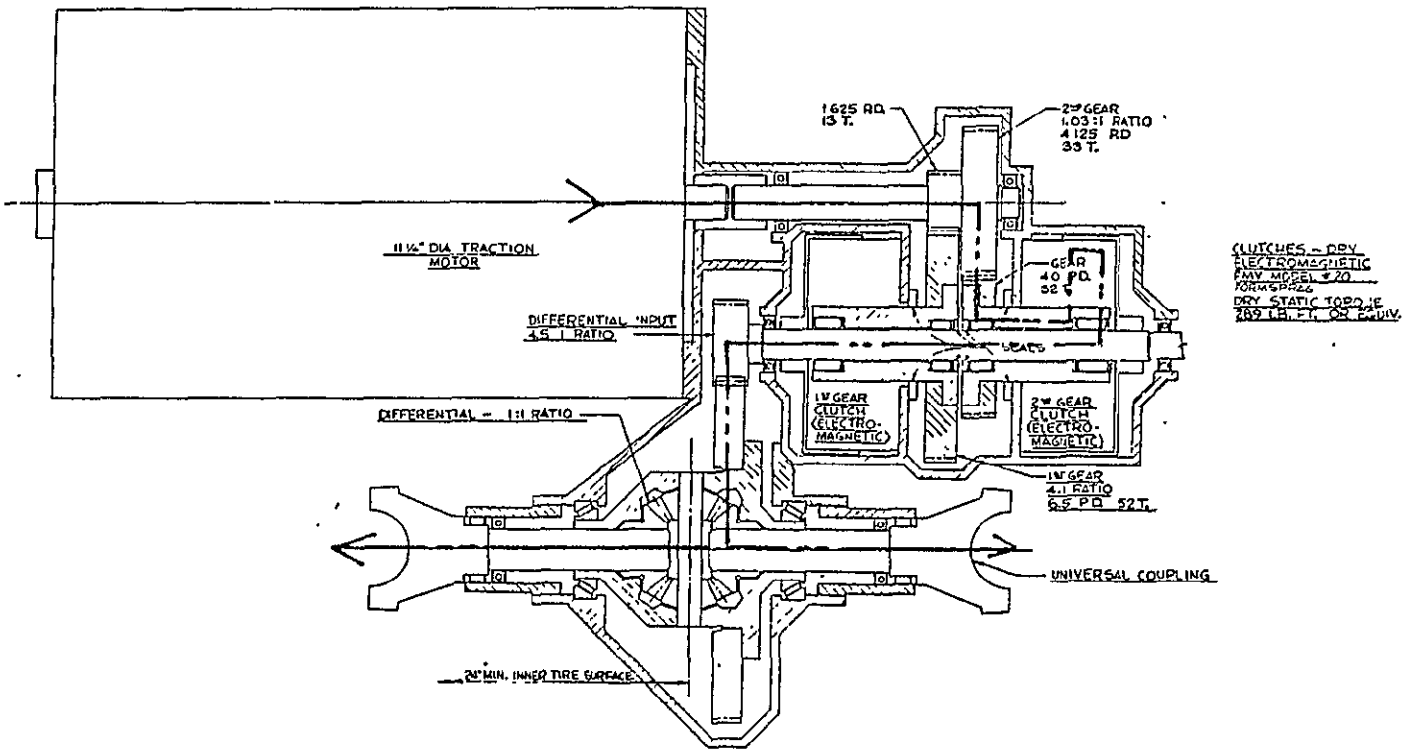

HIGH GEAR

ORIGINAL PAGE IS OF POOR QUALITY

CHARACTERISTICS OF THE ELECTROMAGNETIC TRANSMISSION

- Based on off-the-shelf components.
- Weight less than 100 pounds.
- Compact.
- Activation power 0.04 HP.
- Slip friction loss less than 0.1 HP.
- Conservative gear loading.
- Requires synchronized motor control to maximize reliability and smoothness.
- An alternate version using tooth-type clutches would be smaller and lighter.

TOOTH TYPE ELECTROMAGNETIC
3 SPEED TRANSMISSION

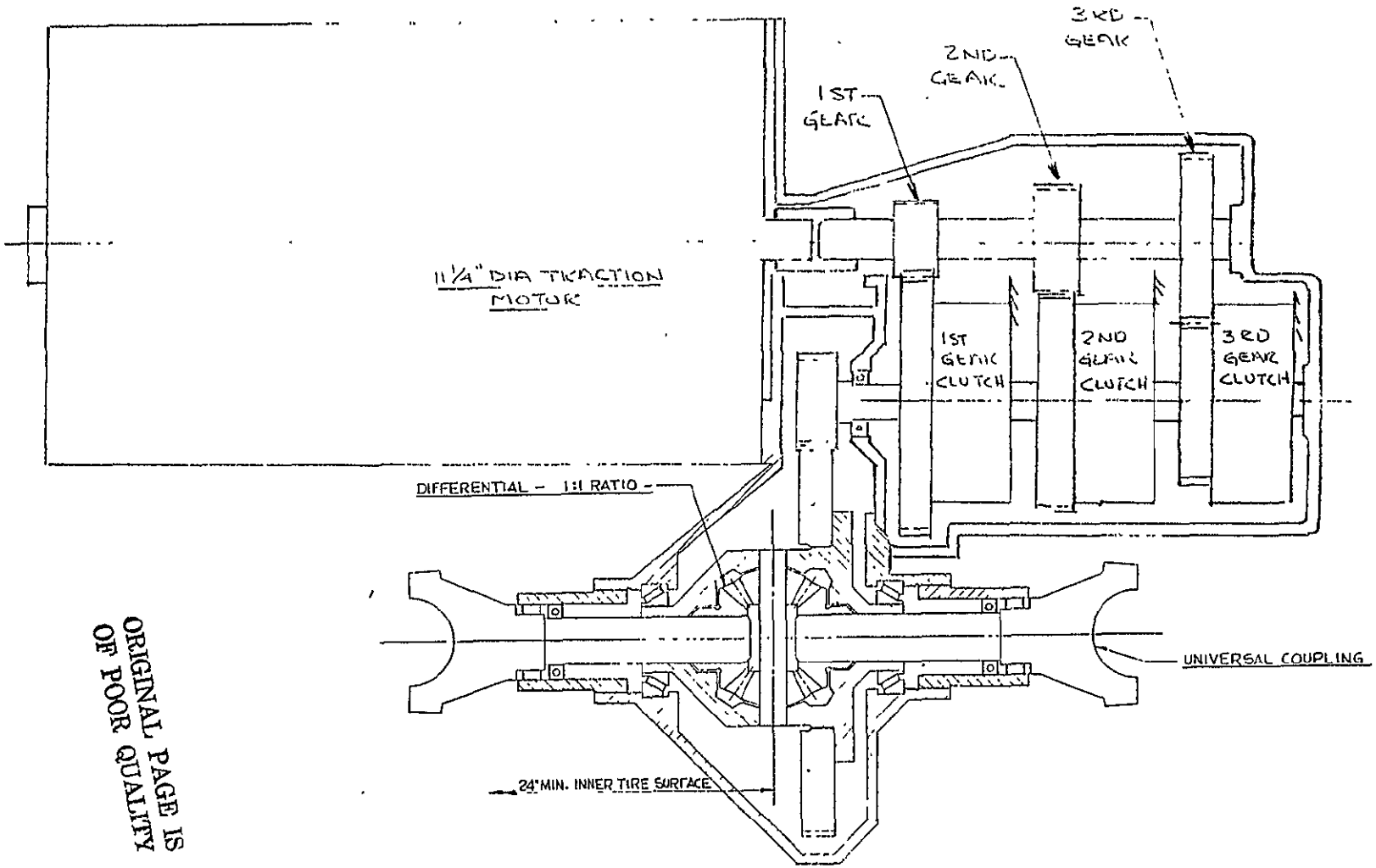

ORIGINAL PAGE IS
OF POOR QUALITY

V. SUMMARY OF RESULTS

1. STATE-OF-THE-ART ELECTRIC VEHICLES ARE PRIMARILY CONVERSIONS WITH A HANDFUL OF ORIGINAL DESIGNS.

   (1) Most Suitable, Off-The-Shelf, Components Are Well Qualified Automotive or Industrial Products.

   (2) Reliability Has Not Been Demonstrated in a Suitable, Efficient Automatic Transmission.

2. THE MAJOR ELEMENTS OF THE PRELIMINARY POWER TRAIN DESIGN DEVELOPED IN THIS STUDY ARE A DC SERIES MOTOR, SCR CONTROLLER AND V-BELT CVT.

   (1) The DC Series Motor With SCR Controller Represents the State-Of-The-Art Prime Mover.

   (2) An Electrically Controlled V-Belt CVT When Used In a State-Of-The-Art Power Train Offers Superior Range When Compared To Other Available Transmissions.

   (3) The State-Of-The-Art Power Train Can Achieve a Range of 36 Miles Over The SAE J227a/D Cycle, 47 Miles at a Constant 55 MPH and 6.2 Miles Up a 10 Percent Grade at 30 MPH.

3. IMPROVEMENTS STUDIED IN DETAIL INCLUDE THE USE OF SEPARATELY EXCITED MOTORS, AN ELECTROMAGNETIC TRANSMISSION AND MORE REALISTIC COMPONENT WEIGHT AND EFFICIENCIES.

(1) The Use of a Separately Excited DC Motor, As Compared To a Series Machine, Can Achieve a Range of Approximately 38 Miles Over the SAE Cycle.

(2) A Two Speed Electromagnetically Shifted Transmission, Composed of Off-the-Shelf Components, May Provide An Efficient and Reliable Electric Vehicle Transmission.

4. FUTURE WORK SHOULD EMPHASIZE NEAR TERM TECHNICAL ADVANCES TO BRING A PRACTICAL ELECTRIC VEHICLE CLOSER TO REALITY.

(1) Better Batteries, Expanded Use of Light Weight Materials and Low Rolling Resistance Tire Designs Are the Areas With the Major Potential for Improved Range.

(2) Further Development of High Speed DC Motors and Electronic Control Packages Will Enhance the Potential for "All Electric" Drives.

(3) The Electromatic CVT and the Electromagnetically Shifted Transmission Should Be Applied To Vehicle Power Trains To Demonstrate Their Reliability in the Field.