United States Patent [19]

Polstorff

[11] **4,106,218**

[45] **Aug. 15, 1978**

[54] **SIMULATOR METHOD AND APPARATUS FOR PRACTICING THE MATING OF AN OBSERVER-CONTROLLED OBJECT WITH A TARGET**

[75] Inventor: **Walter K. Polstorff,** Huntsville, Ala.

[73] Assignee: **The United States of America as represented by the Administrator of the National Aeronautics and Space Administration,** Washington, D.C.

[21] Appl. No.: **772,165**

[22] Filed: **Feb. 25, 1977**

Related U.S. Application Data

[63] Continuation-in-part of Ser. No. 590,183, Jun. 25, 1975, abandoned.

[51] **Int. Cl.**[2] **G09B 9/02**

[52] **U.S. Cl.** ..... **35/12 C;** 35/12 N; 358/104

[58] **Field of Search** ..... 35/10.2, 11 A, 11 R, 35/12 C, 12 N, 25; 235/151; 273/101.1, DIG. 28; 340/324 A, 324 AD, 324; 358/104, 88; 364/200

[56] **References Cited**

U.S. PATENT DOCUMENTS

3,439,105	4/1969	Ebeling et al.	35/12 N X
3,507,990	4/1970	Wolff	358/104
3,665,408	5/1972	Erdahl et al.	340/324 A X
3,682,553	8/1972	Narinder	358/88 X
3,729,129	4/1973	Fletcher et al.	35/10.2
3,736,564	5/1973	Watkins	235/151
3,804,977	4/1974	Driskell	35/11 A X
3,862,358	1/1975	Wolff	35/11 A
3,910,533	10/1975	Cheatham	35/12 C X
3,918,714	4/1972	Ceccaroni	273/101.1
3,961,133	6/1976	Bennett	340/324 AD

OTHER PUBLICATIONS

Elson, B. M.; "Color T.V. Generated by Computer to Evaluate Space Borne Systems", *Aviation Week & Space Technology,* Oct. 30, 1967, pp. 78–82.

Lockwood, L. W., "Visual Simulators for Moon Men", *Optical Spectra,* Oct. 1971, pp. 32–35.

Primary Examiner—Vance Y. Hum

Attorney, Agent, or Firm—George J. Porter; John R. Manning; L. D. Wofford, Jr.

[57] **ABSTRACT**

A servo controlled target replica, and a surface bearing a computer generated line drawing of an object are individually viewed by separate television cameras allowing a two-dimensional composite of the target replica and the object to be displayed on a monitor simulating what an observer would see through a window in a spacecraft. The target replica is coded along one self coordinate axis in such a way that the distance of an elemental area on the target along the axis is capable of being remotely readout by a television camera. A third television camera responsive to the code reads out this information by which the Z-coordinate, relative to the observer, can be calculated, on-line with the scan, for the contents of each picture element of the scene televised by the target camera. The computer calculates the X, Y, Z-coordinates relative to the observer for the contents of each picture element of the scene televised by the object camera; and a comparator compares the Z-coordinates for corresponding picture elements of both scenes in order to determine which camera is to be blanked from the monitor so as to create the illusion that either the target or the object is closer to the observer. The range and aspect of the object is directly controlled by manual inputs to the computer in order to create the illusion of movement of the object relative to the observer and to the target. Realism is further enhanced by creating, on the target, the shadow cast by the object.

20 Claims, 3 Drawing Figures

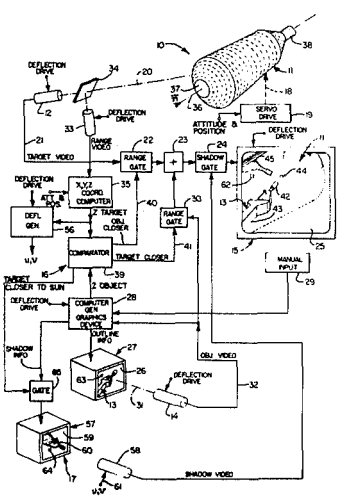

FIG. 1.

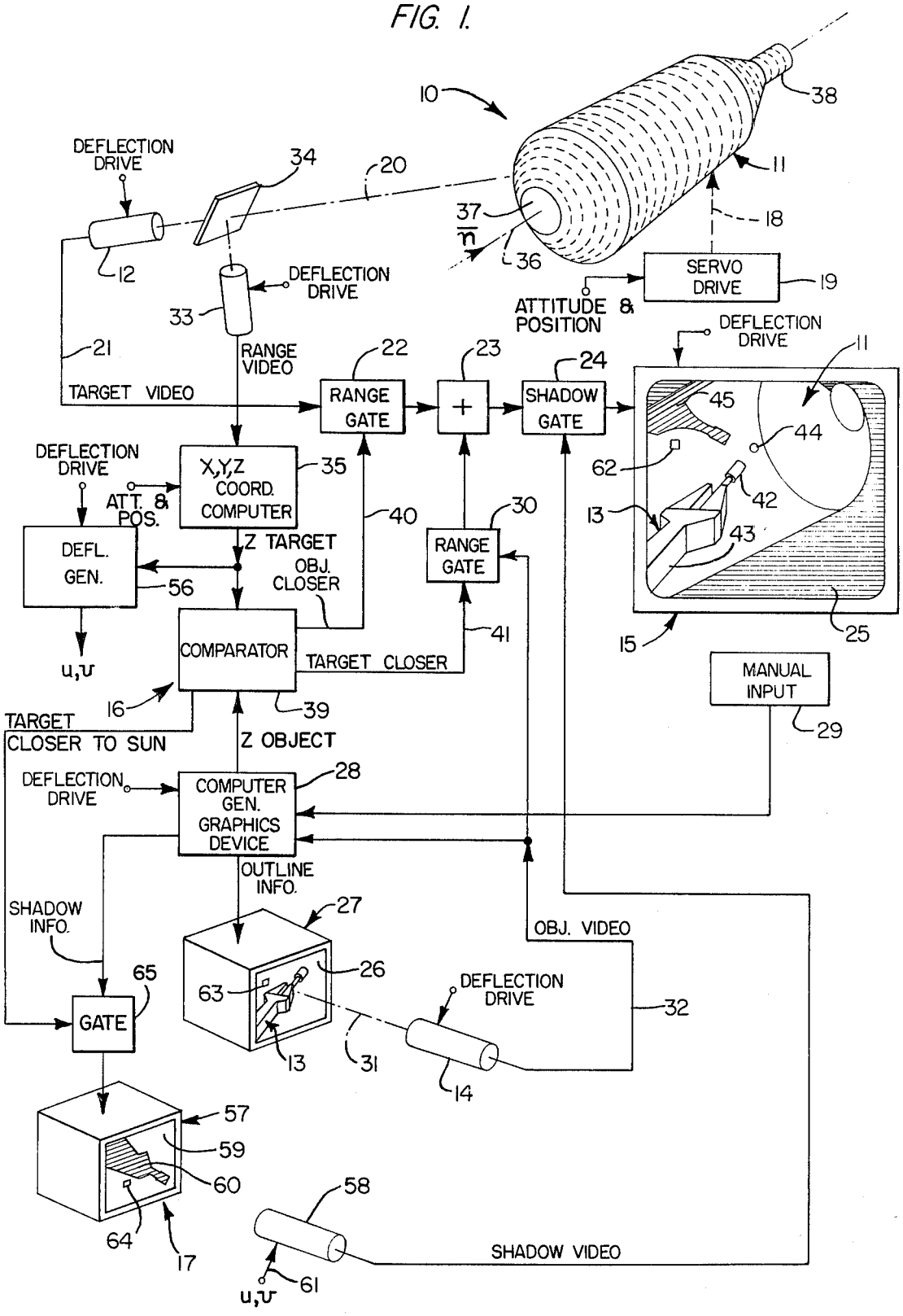
10
38
11
18
DEFLECTION DRIVE
34
20
37
n
36
12
DEFLECTION DRIVE
33
SERVO DRIVE
19
ATTITUDE & POSITION
DEFLECTION DRIVE
11
21
RANGE VIDEO
22
23
24
TARGET VIDEO
RANGE GATE
+
SHADOW GATE
45
44
DEFLECTION DRIVE
X,Y,Z COORD. COMPUTER
35
62
ATT. & POS.
42
13
40
30
43
DEFL. GEN.
Z TARGET
RANGE GATE
56
OBJ. CLOSER
41
COMPARATOR
TARGET CLOSER
15
25
u,v
MANUAL INPUT
16
39
TARGET CLOSER TO SUN
Z OBJECT
29
DEFLECTION DRIVE
28
COMPUTER GEN. GRAPHICS DEVICE
OUTLINE INFO.
SHADOW INFO.
27
OBJ. VIDEO
65
26
63
DEFLECTION DRIVE
32
GATE
13
31
14
57
59
60
58
64
17
SHADOW VIDEO
61
u,v

FIG. 2.

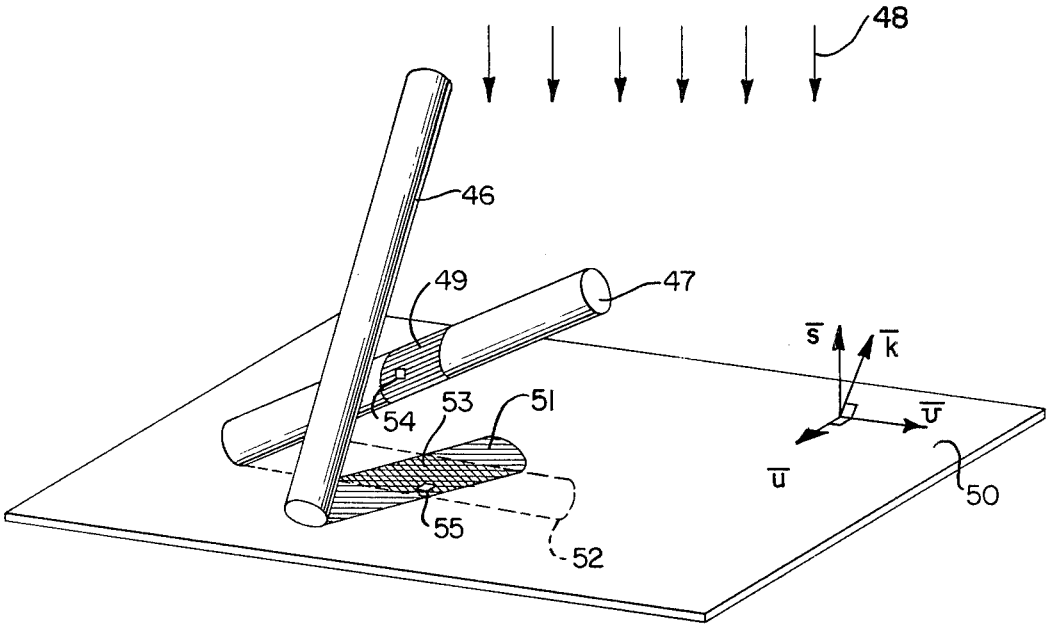

FIG. 3.

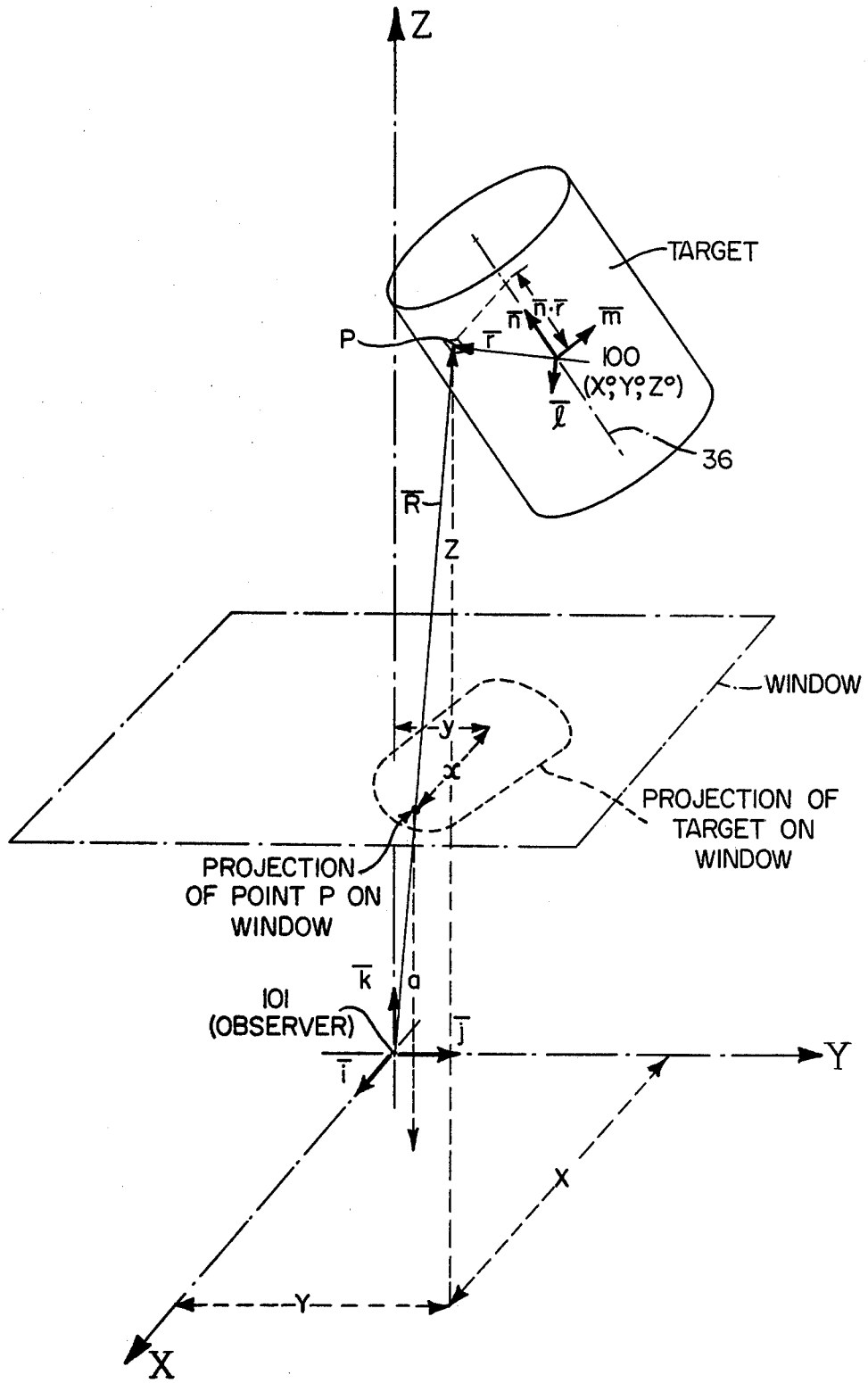
Z
TARGET
n·r
n
m
P
r
100
(X°;Y°;Z°)
ℓ
36
R
Z
WINDOW
y
x
PROJECTION OF
TARGET ON
WINDOW
PROJECTION
OF POINT P ON
WINDOW
k
a
101
(OBSERVER)
j
i
Y
X
Y
X

SIMULATOR METHOD AND APPARATUS FOR PRACTICING THE MATING OF AN OBSERVER-CONTROLLED OBJECT WITH A TARGET

ORIGIN OF THE INVENTION

The invention described herein was made by an employee of the United States Government, and may be manufactured and used by or for the Government for governmental purposes without the payment of any royalties thereof or therefor.

This application is a continuation-in-part of application Ser. No. 590,183 filed June 25, 1975, now abandoned.

BACKGROUND OF THE INVENTION

This invention relates to a simulator by which an observer, viewing both a target and an object under his control, can practice mating the object with the target; and such simulator is hereinafter termed a simulator of the type described.

Space orbital operations currently in preparation for the future involve deployment and retrieval of shuttle orbiter payloads relative to an orbiting space station or space vehicle, as well as refurbishing and repair of orbiting vehicles. Such operations will often have to be executed using manipulators controlled by an operator aboard one of the spacecrafts viewing the termination of the manipulator and the target through a window in the craft, or by means of a television link which would also enable operations to be carried out by an earth-based operator.

Maneuvering a manipulator and mating it with the target in a gravity free environment are operations that are different from corresponding operations on earth. In particular, gravity induced torques, which dominantly influence design and performance on earth are absent in space. Furthermore, the mating of the termination of the manipulator with the target must take place with essentially zero velocity in order to minimize a target and manipulator reactive impulse. Such impulse would tend to separate the target from the body carrying the manipulator and therefore must be avoided.

For personnel destined to carry out missions of the type referred to above, it is essential to practice such missions in ground-based simulators to insure proficiency in space. One approach to this training is to construct simulators of the type described using actual or replica models with built-in servo operations to simulate the peculiarities of space performance as noted above. This approach, while having the advantage of visual realism, is very complex and can achieve only limited realism in performance thereby reducing the effectiveness of a training program. Another approach is to employ computer-generated graphics in which both the target and a manipulator, for example, are created on a surface that is supposed to represent the view from a window of a spacecraft or a television monitor. This approach more closely simulates the reactions of the components in a weightless environment but at the expense of visual realism. Complex surfaces familiar to an operator are approximated by polyhedrons in computer-generated graphics and thus appear distorted and hence unrealistic decreasing training effectiveness.

It is therefore an object of the present invention to provide a new and improved simulator method and

apparatus of the type described which is less complex in terms of equipment yet realistic in terms of visual perception and equipment performance, thus overcoming substantially all of the deficiencies of the prior art as noted above.

SUMMARY OF THE INVENTION

According to the present invention, a servo controlled target replica, and a surface bearing a computer generated line drawing of an object are individually viewed by separate television cameras allowing a two-dimensional composite of the target replica and the object to be displayed on a monitor simulating what an observer would see through a window in the spacecraft. The target replica is coded along one coordinate axis in such a way that the distance of an elemental area on the target along the axis is capable of being remotely readout by a television camera. The code is by way of a variation in color (i.e., wavelength) or in brightness (or a combination of color and brightness). A third television camera responsive to the code provides information by which the Z-coordinate, (and also X,Y) relative to the observer, can be calculated, on line with the scan, for the contents of each picture element of the scene televised by the target camera. The computer that develops data by which the line drawing of the object is generated also calculates the Z-coordinate relative to the observer for the contents of each picture element of the scene televised by the object camera; and a comparator compares the Z-coordinates for corresponding picture elements of both scenes in order to determine which camera is to be blanked from the monitor so as to render either the target or the object opaque and create the illusion that one or the other is closer to the observer.

The range and aspect of the object is directly controlled by manual inputs to the computer in order to create the illusion of movement of the object relative to the observer and to the target. Greater realism is achieved by creating a shadow of the object on the target. Their mating is visually established by merger of the shadow on the target with the point on the object furthermost from the observer.

The present invention utilizes existing equipment in the sense that servo driven target replicas are well known as is apparatus for generating animated line drawings on a surface. As a consequence of utilizing both a real target and a computer-generated graphical representation of the object, a realistic display of a composite of the target and the object is achieved while also preserving the ability of the target and object to respond to interactions in ways that are peculiar to operation in a weightless environment.

BRIEF DESCRIPTION OF THE DRAWINGS

An embodiment of the invention is illustrated in the accompanying drawings wherein:

FIG. 1 is a block diagram of a simulator according to the present invention illustrating a typical target and a typical object; and

FIG. 2 is a perspective view of a general type of object and target for the purpose of illustrating how the shadow of the object on the target can be determined using a shadow plane perpendicular to the direction of light falling on the object and the target.

FIG. 3 is a perspective view of the target in relation to the observer coordinate system and is useful in explaining the manner in which the location of a given

point on the target relative to an observer is computed as X, Y, Z.

DESCRIPTION OF THE PREFERRED EMBODIMENT

Referring now to FIG. 1, reference numeral **10** designates a simulator according to the present invention comprising a target **11** and an associated target image channel including a first television camera **12**; object **13** and an associated object image channel including a second television camera **14**; a television monitor **15**; coordinate computer **35** and comparator **16**; and a shadow generating channel **17**. Target **11**, which may be an actual space vehicle or a scaled replica thereof, is mounted for three-axis movement at **18** by means of servo drive **19**. Translational motions of the target, which are shown in FIG. **1** as being accomplished by servo drive **19**, can be, alternatively, simulated by zoom optics on the camera, and/or camera pan or tilt by actual motion of the camera or by modifications in the deflection drive furnished to the camera. For simplicity, all 6° of target motion are performed. by servo drive **19**, the input to drive **19** being indicated by the legend "target attitude and position."

As shown in FIG. **3**, the location of the origin **100** of the target coordinate system (i.e., the point to which all points on the target surface are referred for measurement purposes, and in general, the center of mass of the target) is predetermined and given by coordinates X°, Y°, Z° in the observer coordinate system. As shown in FIG. **1**, the longitudinal axis **36** of the target passes through the origin of the target coordinate system. In addition, the attitude of the target relative to the observer is also predetermined so that drive **19** provides target attitude and position data relative to the observer as described below.

Camera **12**, which is responsive to the spectral region of light only reflected by the target and not to the light used for coding the target as described below, views the target **11** through dichroic mirror **34** along optical axis **20** and produces a target video signal in line **21** that is applied via normally-open target range gate **22**, OR circuit **23** and normally-open target shadow gate **24** to the intensity control of television monitor **15**. As is conventional in a closed circuit television system, deflection drive signals derived from a cental source (not shown) are applied to camera **12** and to monitor **15** enabling the scene being televised by camera **12** to be reproduced on screen **25** of the monitor. As indicated above, controlled inputs to servo drive **19** (alone or in combination with corresponding changes in zoom, pan and tilt operation of camera **12**) will provide on screen **25** an image of the target changing in range and aspect with respect to the vantage point at which the camera **12** is located. The display on screen **25** thus simulates what an observer would see through a window in an adjacent space vehicle in orbit with target **11** or what a ground-based observer would see by reason of a television-link with the adjacent craft.

Object **13** is shown as a two-dimensional, perspective line drawing of the operating end of a manipulator such as it would appear to an observer through the window of a spacecraft carrying the manipulator. Alternatively, object **13** may be the operating end of an actual manipulator. Preferably, however, object **13** is generated on screen **26** of a display device **27** in accordance with the output of a computer-generated graphical device **28** of the type shown in U.S. Pat. No. 3,736,564. The range and aspect of the object relative to an object vantage point defined by the location of camera **14** relative to screen **26** are determined by observer-controlled manual inputs **29** in a conventional way in order to permit the observer to move the object on screen **26** which is not directly viewed by the observer.

In addition to the second television camera **14**, the object image channel includes normally-open object gate **30**, summing junction **23** and the shadow gate **24**. Camera **14** views the screen **26** along optical axis **31** and produces an object video signal in output line **32** by reason of the deflection drive applied to the camera. Consequently, the scenes televised by cameras **12** and **14** are superimposed on screen **25**. To an observer of screen **25**, it appears that the target vantage point, which is the location of camera **12**, and the object vantage point, which is the location of camera **14**, are merged into a single point and both the object and the target are within the observer's field of view.

In the absence of relative range calculation means **16**, the target and object would appear to be transparent so that it would not be possible to establish the relative distance from the observer of the object and the target. This ambiguity is resolved by comparator **16** which compares the Z-coordinates (relative to the observer) of the contents of corresponding picture elements in the scene televised by cameras **12** and **14** to the respective vantage points. If the distance from the target vantage point to the contents of a picture element in the scene being televised by camera **12** is greater than the distance from the object vantage point of camera **14** to the contents of a corresponding picture element in the scene being televised by camera **14**, then the object will be in the foreground on screen **25** and should be opaque concealing that part of the target lying behind the object. This result is achieved by causing the video signal produced by camera **14** to pass through gates **30** and **24** to the television monitor **15**, while, at the same time, blocking the target video signal by closing gate **22**. Thus, the contents of the currently scanned picture element in the scene televised by camera **14** would appear on screen **25** to the exclusion of the contents of the currently scanned picture element in the scene televised by camers **12** with the result that the object **13** would be opaque on screen **25** blocking the target **11**.

Comparator **16** has a target X-coordinate channel and an object Z-coordinate channel. The target channel includes observer coordinate system computer **35**, and a third television camera **33** which views the target **11** from the same vantage point (with identical zoom, pan and tilt) as the first television camera **12** by reason of dichroic mirror **34** causing the optical axis of camera **33** to coincide with the optical axis **20** of camera **12**. In addition, target **11** is provided with a coding which for each point on the target surface indicates the distance of the projection of that point on axis **36** as measured from origin **100** of the target coordinate system. As shown in FIG. **3**, $\bar{n}$ is the unit vector lying along the axis **36** and $\bar{r}$ is the vector connecting origin **100** to a point p on the surface of the target. Consequently, the scaler $\bar{n}\cdot\bar{r}$ is the distance of the projection of point p on axis **36** measured from origin **100**; and such scalar represents the value of the coding for the point p. Preferably, the coding is in the form of a variation in brightness along axis **36**, the relative value of brightness at a point p having the value $\bar{n}\cdot\bar{r}$. In other words, the brightness of the target changes from one axial end to the other. (See FIG. **1**) For example, if the forward end **37** is brightest, and the opposite

axial end **38** of the target is dimmest, then the brightness of an intermediate region would have an intermediate value of brightness. Concentric circles **70** shown on the target in FIG. **1** represent bands of constant brightness, the magnitude of which varies along the axis **36** of the target.

The instantaneous output of camera **33**, which is functionally related to the brightness of the subject matter of the picture element currently scanned by both cameras **12** and **33**, is the quantity $\bar{n}\cdot\bar{r}$ associated with the contents of the currently scanned picture element. Such quantity is termed the "distance component" of the contents of the currently scanned picture element. Such output is converted by computer **35** (in the manner described below) to the previously referred target Z-coordinate for the scanned picture element (i.e., the distance from the target vantage point to the subject matter of the scanned picture element as measured along a normal to the window plane — See FIG. **3**). The nature of the dichroic mirror is such that camera **12** is responsive only to the spectral region of the light simulating the sun and illuminating the target. If necessary, a filter can be placed before the camera to achieve the desired response. On the other hand, camera **33** is responsive only to the spectral region of light that constitutes the target coding. Thus, the video signal in the line **21** applied to gate **22** contains information that would, if gate **22** were open, enable the reproduction on screen **25** of the contents of the picture element currently being scanned by camera **12**, and the output of computer **35** contains the target Z-coordinate of such contents.

The manner in which computer **35** computes the target Z-coordinate is now described with reference to FIG. **3**, it being understood that the amplitude of the output of camera **33** at any instant is the distance component $(\bar{n}\cdot\bar{r})$ of the contents of the picture element being scanned at that instant. If point p is the elemental area on the target being currently scanned by camera **33**, FIG. **3** shows that the projection of this point on the axis **36** of the target is $\bar{r}\cdot\bar{n}$ where $\bar{r}$ is the vector from origin **100** to the point p, $\bar{n}$ is the unit vector directed along the axis **36**, and the symbol "·" means the dot-product of two vectors. In view of the above terminology, it can be seen that the video signal produced by camera **33** at any instant during the scan of its raster provides three pieces of information: the x,y coordinates (i.e., the location on the "window") of the currently scanned picture element p, and the scalar quantity $\bar{r}\cdot\bar{n}$ (i.e., the projection of p measured along the axis **36**).

By reason of the initial set-up, the following parameters are also known: a, which is the distance of the "window" from the observer's eye located at the origin **101** of the observer coordinate system X, Y, X; X°, Y°, Z°, which are the coordinates of the origin **100** of the target; and $\bar{I}\cdot\bar{n}$, $\bar{j}\cdot\bar{n}$ and $\bar{k}\cdot\bar{n}$, which are the components (i.e., direction cosines) of the unit vector $\bar{n}$ in the observer coordinate system and constitute attitude information available from the drive **19**.

From inspection of FIG. **3**, it can be seen that

$$x/a=X/Z=(X^\circ+\bar{r}\cdot\bar{i})/(Z^\circ+\bar{r}\cdot\bar{k}) \text{ and}$$
$$y/a=Y/Z=(Y^\circ+r\cdot j)/(Z^\circ+r\cdot k) \quad (1)$$

$$\bar{r}\cdot\bar{n}=(\bar{r}\cdot\bar{i})\,(\bar{i}\cdot\bar{n})+(\bar{r}\cdot\bar{j})\,(\bar{j}\cdot\bar{n})+(\bar{r}\cdot\bar{k})\,(\bar{k}\cdot\bar{n}) \quad (2)$$

These are three linear equations with three unknowns, $\bar{r}\cdot\bar{i}$, $\bar{r}\cdot\bar{j}$, $\bar{r}\cdot\bar{k}$, the components of $\bar{r}$ in the observer coordinate system. The direction cosines $\bar{i}\cdot\bar{n}$, $\bar{j}\cdot\bar{n}$, $\bar{k}\cdot\bar{n}$ and the position of the target's center of mass in the observer's coordinate system X°; Y°,Z° are known from the target attitude and position information furnished to servo drive **19**. Thus, for each image point x,y it is possible to calculate (based on the readout of $\bar{r}\cdot\bar{n}$ with camera **33**) the corresponding unknowns in real time. These equations can be solved, however, only as long as the equations' system determinent D does not go to zero: $D=\bar{x}\cdot(\bar{n}\cdot\bar{i})+\bar{y}\cdot(\bar{n}\cdot\bar{j})+\bar{a}\cdot(\bar{n}\cdot\bar{k})$. D can be interpreted as the scalar product of $\bar{n}$, the unit vector of the target body coordinate axis along which the coding for remote readout is conducted and the position vector for the image point in the window. For example, with a field of view of 50° diagonally, and the $\bar{n}$ vector within a cone of ±55° around the Z-axis, D/a will always be more than 0.18. Then, for any point in the window it is possible to determine the components $\bar{r}\cdot\bar{i}$, $\bar{r}\cdot\bar{j}$, $\bar{r}\cdot\bar{k}$, which in turn determines X,Y,Z the coordinates of any visible point of the target in the observer's coordinate system. The comparator **6** compares, as the scan x,y progresses, the target coordinate $Z_t(x,y)$ with the corresponding object $Z_o(x,y)$. The latter is generated in the object coordinate computation as described below.

The arrays used in computer **35** for the real time solution of the three linear equations identified above are based on commercially available components such as multiplying digital/analog converters (e.g., the AD 7522) and analog dividers (e.g., the AD422) both of which are produced by Analog Devices of Norwood, Massachusetts. Implementation of the components to achieve the required real time solution can follow the arrays used for coordinate transformation described in "Hybrid Analog/Digital Technique for Signal Processing Applications" by Thomas G. Horan and Robert Treiber appearing in "Proceedings Spring Joint Computer Conference, 1966."

Computer **28**, which generates object **13** on screen **26**, is programmed to compute the range of each elemental area of the object relative to the object vantage point. By applying to computer **28** the same deflection signal as applied to television cameras **12**, **14** and **33**, the computer will produce object range signals synchronised with the target range signals produced by computer **35** enabling the subject matter of the picture elements to the respective scenes being televised by cameras **12** and **14** to be compared in terms of range to the respective vantage points.

Both the target range signals and the object range signals are applied to comparator **39** of range means **16**. When a target range signal exceeds an object range signal in amplitude, the object will be closer than the target to an observer viewing screen **25**, and a gate signal generated by the comparator is applied to line **40** closing gate **22** and blocking the video output of camera **12**. As a result, the video signal in line **32** is passed by gate **30** through shadow gate **24** to monitor **15** enabling the subject matter of the picture element currently scanned by camera **14** to be reproduced on screen **25** to the exclusion of the subject matter of the picture element currently scanned by camera **12**. Conversely, when an object range signal exceeds a target range signal in amplitude, comparator **39** produces a gate signal in line **41** closing gate **30** blocking the video signal produced by camera **14**. In such case, the subject matter of the picture element currently scanned by camera **12** passes to the monitor to the exclusion of the subject matter of the picture element currently scanned

by camera **14**. FIG. **1** thus shows a situation in which all parts of object **13** viewed by camera **14** are closer to the observer than the portion of target **11** viewed by camera **12**. Object **13** thus appears to be opaque on screen **25** overlying and blocking portions of target **11**.

Since screen **25** is two-dimensional, cues must be provided to the observer in order to enable him to judge the relative clearance between the object and the target. One such cue is the perspective of the object and target achieved by reason of the camera **12** and the computer **28**; but this is not sufficient. It is essential for the shadow of the object to be shown on the target since mating of the object with the target can be seen to occur when the shadow merges with the portion of the object furtherest from the observer.

Referring to screen **25** in FIG. **1**, it can be seen that tool **42** held by the manipulator arm **43** is spaced from a tool receiving lug **44** on target **11** because the tip of shadow **45** of the tool and manipulator arm on the target is spaced from the free end of the tool. Observer operated controls **29** enable computer **28** to generate a changing picture of the manipulator and the tool to simulate movement of the tool towards the target, and, eventually their mating. It is desired to achieve mating at essentially zero relative velocity in order to minimize a reactive impuse that would thrust the target away from the tool. By observing shadow **45** while manipulating controls **29**, the operator can practice mating the tool with the lug in order to become proficient in achieving low velocity contact.

In order to generate shadow **45**, shadow generating channel **17** is utilized. Before describing the operation of this channel, reference is now made to FIG. **2** which is useful in explaining the theory behind its operation. Referring now to FIG. **2**, object **46** and target **47**, while actually three-dimensional, are shown in two dimensions as they would appear on a monitor screen using the target and object channel equipment described above. Object **46** is seen to be closer to the observer than target **47** by reason of the blocking of the target by the object. Furthermore, object **46** is seen to be spaced from the target by reason of the location on the target of the shadow **49** cast thereon by the object. Such shadow results from parallel light rays **48**.

Assuming there exists a plane **50** perpendicular to the rays **48**, the object casts shadow **51** and the target casts shadow **52** on the plane. It can be shown that the shadow **49** on target **47** maps into the area **53** defined by the overlap between shadows **51** and **52**. Thus, elemental area **54** having coordinates X,Y,Z relatie to an observer and lying within the shadow **49** maps into elemental area **55**, for example, lying within the overlap region **53** in shadow plane **50**.

The direction of the solar rays is represented by the unit vector $\bar{s}$. Assuming that the sun is not directly behind the observer (i.e., $\bar{k}$ not parallel to $\bar{s}$), vector product $\bar{k} \times \bar{s}$ defines a direction in the shadow plane. This direction is selected as the direction of the u-axis in the shadow plane (FIG. 2). The unit vector is:

$$\bar{u}=\bar{s}\times\bar{k}/\sqrt{(\bar{s}\cdot\bar{i})^2+(\bar{s}\cdot\bar{j})^2}=((\bar{s}\cdot\bar{j})\cdot\bar{i}-(\bar{s}\cdot\bar{i})\cdot\bar{j})/\sqrt{(\bar{s}\cdot\bar{i})^2+(\bar{s}\cdot\bar{j})^2} \quad (3)$$

The $\bar{v}$-axis is perpendicular to the u-axis; and its unit vector v has the direction of the vector product of $\bar{u}$ and $\bar{s}$.

$$\bar{v}=\bar{s}\times\bar{u}/|(\bar{s}\times\bar{u})| \quad (4)$$

$$\bar{v}=[(\bar{s}\cdot\bar{j})(\bar{s}\cdot\bar{k})\cdot\bar{i}+(\bar{s}\cdot\bar{j})(\bar{s}\cdot\bar{k})\cdot\bar{j}-((\bar{s}\cdot\bar{i})^2+(\bar{s}\cdot\bar{j})^2)\bar{k}]/\sqrt{(\bar{s}\cdot\bar{i})^2+(\bar{s}\cdot\bar{j})^2} \quad (5)$$

With the shadow plane defined, together with the coordinate system u,v on the plane, expressions can be obtained for the shadows cast by the object (which is described in the observer coordinate system since the object is attached to the observer's frame) and the shadow cast by the target on the shadow plane. The latter is available because coordinate computer **35** (See FIG. **1**) provides the coordinates X,Y,Z of each visible point of the target in real time in synchronism with the scan x,y of the deflection drive. The computer **28** for the object graphics generates the view of the object in the window as well as the shadow of the object in the shadow plane. If a point on the object has observer coordinates X,Y,Z, its shadow has the coordinates $u=(X\cdot\bar{i}+Y\cdot\bar{j}+Z\cdot\bar{k})\cdot\bar{u}$; $v=(X\cdot+Y\cdot\bar{j}+Z\cdot\bar{k})\cdot\bar{v}$. If comparator **39** also determines that the object point is closer to the sun than the corresponding target point, gate **65** opens and the shadow of the object is displayed on the screen **59** of monitor **57**. The deflection generator **56** receives the target coordinates X,Y,Z as functions of the scan x,y and generates the deflection coordinates u,v which represent the shadow point of the target point appearing in the window at x,y. The scanning beam of the camera **58** is deflected by u,v $u=(X\cdot\bar{i}+Y\bar{j}+Z\bar{k})\bar{u}$ and $v=(X\cdot\bar{i}+Y\cdot\bar{j}+Z\cdot\bar{K})\cdot\bar{v}$. When it senses the shadow of the object, shadow gate **24** is closed and a shadow of the object on the target is displayed on monitor **15**.

If the currently scanned picture element is that element designated by reference numeral **62** on screen **25**, the corresponding currently scanned picture element on screen **26** is indicated by reference **63** while the deflection signal produced by generator **56** is such as to cause the scanning beam of camera **58** to impinge upon elemental area **64** of screen **59**. Since elemental area **64** is not within shadow **60**, the video output from camera **58** has no effect on gate **24** and the video information derived from either target camera **12** or object camera **14** is free to pass gate **24** and into the intensity control circuit of monitor **15**. On the other hand, when the currently scanned elemental area of the target is such as to cause the beam of camera **58** to scan into shadow **60**, the video output of camera **58** serves to close gate **24** thus blocking any input from either camera **12** or camera **14** and causing a dark elemental area to be produced on screen **25**. In this manner, a composite representation of both the object and the target is displayed on monitor **15** with the inclusion of the shadow of the object on the target.

Training an observer to properly mate an object with a target is made more realistic by providing for an independent input to servo drive **19** which is manifested on screen **25** by a target slowly changing in position and aspect relative to the observer. By independently programming servo drive **19** for predetermined position and attitude variations, an observer would appear to be aboard a chase craft in orbit with a target craft.

Finally, camera **14** and monitor **27** can be eliminated by arranging for device **28** to feed information into monitor **15** through gate **30**. In such case, object **13** would be generated directly on screen **25** of the monitor.

Alternative to brightness coding along the longitudinal axis of the target, coding by variation in color, or a combination of spectral brightness and color for the

coding can be employed. The use of brightness as the measurable stimulus for coding is advantageous because brightness is substantially independent of the aspect of the target and its distance from the camera.

The target can be coded by applying to the same a self-luminant coating which is stimulated to emit light by its own radioactivity or an electroluminescent material that emits light in the presence of an electrical field. The latter material is preferred because the brightness of light emitted can be controlled easily. If the brightness distribution in the direction of the selected body-axis of the target does not correspond to the desired distribution, correction can be effected in the manner indicated below.

The actual brightness distribution over the entire target is measured, elemental area by elemental area, and recorded for later processing. Where the target has a longitudinal axis of symmetry, as, for example, axis **36** of target **11**, rotation of the target about such axis is carried out as a spot photometer, focused on the target surface, is moved axially from one end of the target to the other. Other predetermined programs for scanning the target could be used, however. The output of the spot photometer is recorded on magnetic tape, for example, providing a record of the actual brightness of each elemental area of the target. Where the record is in the form of a magnetic tape, the position in the tape of a segment thereof establishes the three coordinates of an elemental area of the target with which the segment is associated, while the information in such segment is the brightness of such elemental area. Segments with the same position along axis **36** are thus identifiable in the tape allowing it to be processed to introduce into each segment having the same position along axis **36**, information that is necessary to conform the brightness to the level required for such position.

After the target is scanned with the spot photometer, it is covered with a photographic emulsion under conditions that prevent exposure. The target is then exposed to a light beam whose intensity is modulated by the processed record as the beam scans the target following the same procedure by which scanning was carried out by the spot photometer. In this way, each elemental area of the emulsion is exposed in accordance with the ultimate brightness such area is to have. After exposure in the manner indicated above, the emulsion is developed forming a dye filter that is selectively absorbent in the spectral region utilized for coding of the target thus providing the desired brightness gradient of the target.

The brightness distribution of the target can then be checked by repeating the scanning process with the spot photometer. A repetition of the procedure described above can be carried out if the resultant brightness distribution does not meet the desired requirements.

Camera tubes are limited in their dynamic range which is the range from the maximum signal down to the noise level. Photo statistics impose a natural minimum limit for noise which is approached by some camera tubes. As an example, a resolution of brightness of 1% involves conversion to electrons of more than 10,000 photons/frame, picture element; and in such case, the photoon statistics is the dominant noise source. This translates into a high brightness requirement. An alternate to the required high brightness is to increase the information content by adding color.

Color information is added to the target by coating the same with a color emulsion and exposing the coated target to three light beams of three widely separate colors (e.g., red, gree and blue) yet different and separate from the spectral region for which camera **12** is responsive under control of the processed record. After development of the emulsion, each elemental area of the target will have a color that has three components separable by means of filters. Each component can be one bit of a three bit word that establishes the brightness of an elemental area, thus increasing the resolution of the coding of the target.

What is claimed is:

1. A simulator for practicing the mating of an observer-controlled object with a target comprising:

a. means for generating a first video signal representative of a scene containing the target as viewed from a target vantage point;

b. means for generatiing a second video signal representative of a scene containing the object as viewed from an object vantage point;

c. range means for generating, for each picture element of the scene containing the target, a target range signal representative of the range of the contents of the last-mentioned picture element to the target vantage point, and for generating for each picture element of the scene containing the object, an object range signal representative of the range of the contents of the last-mentioned picture element to the object vantage point;

d. comparator means for comparing the target and object range signals of corresponding picture elements of the target and object scenes to identify which of said elements has its contents closer to its vantage point;

e. a television monitor having a viewing screen; and

f. gate means responsive to the comparator means for controlling the application to the monitor of the first and second video signals whereby both the target and the object are simultaneously reproduced on the screen with the object appearing to block the target when the object is closer to the object vantage point than the target is to the target vantage point.

2. A simulator according to claim **1** wherein the means for generating a first video signal includes a target, and a first television camera viewing the target and producing said first video signal.

3. A simulator according to claim **1** including an auxiliary target slaved to the first mentioned target, and means on the auxiliary target by which its range to the target vantage point is determined.

4. A simulator according to claim **1** including a light source and means for generating the shadow of the object on the target when the object is closer to said light source than the portions of the target whereby mating of a point on the object with the target is observable on the monitor when the distance between said point and the shadow decreases to zero.

5. A simulator for producing a composite image on a display screen comprising:

(a) a target in the form of a three-dimensional replica or model and provided with a coding that varies as a function of one coordinate of the target;

(b) a first television camera viewing the target and producing a first video signal;

(c) means for generating a second video signal representative of a scene containing the object as viewed from an object vantage point;

(d) a target range channel responsive to the coding for generating a target range signal associated with each picture element of the scene containing the target, said target range signal being representative of the range of the contents of the last-mentioned picture element to the target vantage point;

(e) means for generating for each picture element of the scene containing the object, an object range signal representative of the range of the contents of the last mentioned picture element to the object vantage point;

(f) comparator means for comparing the target and object signals of corresponding picture elements of the target and object scenes to identify which of said elements has its contents closer to its vantage point;

(g) a television monitor having a viewing screen; and

(h) gate means responsive to the comparator means for controlling the application to the monitor of the first and second video signals whereby both the target and the object are simultaneously reproduced on the screen with the object appearing to block the target when the object is closer to the object vantage point than the target is to the target vantage point.

6. A simulator according to claim **5** wherein said target range channel includes a third television camera for viewing the target from said target vantage point and producing a third video signal related to the distance of the contents of a picture element to a reference point on the target as measured along said one coordinate, and means responsive to the third video signal for producing said target range signals,

7. A simulator according to claim **6** wherein said means responsive to the third video signal is also responsive to the target attitude and the displacement of a reference point on the target from the target vantage point.

8. A simulator according to claim **6** including means for producing, on a surface, the projection of the object on a shadow plane having a predetermined position with respect to both the object and the target, a fourth television camera viewing said surface, means for causing the currently scanned picture element of the scene televised by the fourth camera to be that element constituting the projection on the shadow plane of the picture element of the scene televised by the first television camera, and means to blank the video input to the television monitor when the scan of the fourth television camera is within the projection of the object and when the target is between the shadow plane and the object.

9. A simulator according to claim **6** including observer-controlled means for changing the aspect and range of the object relative to the object vantage point.

10. A simulator according to claim **5** wherein the means for generating a second video signal includes an object and a second television camera viewing the object and producing said second video signal.

11. A simulator according to claim **10** wherein the object is provided with a coding that varies as a function of one coordinate thereof and the range means for determining the range of the object is responsive to said coding for generating an object range signal for each elemental area of the object, each object range signal being representative of the distance from the object vantage point to the elemental area of the object with which it is associated.

12. A simulator according to claim **5** wherein the means for generating a second video signal includes computer generated graphic means for generating a two-dimensional perspective display of the object and a second television camera viewing said display for producing the second video signal, the object range signal being generated by the computer generated graphic means.

13. A simulator according to claim **12** including means independent of the observer for changing the aspect and range of the target relative to the target vantage point.

14. A simulator according to claim **5** wherein the target coding is a variation in brightness along said self-coordinate.

15. A simulator according to claim **5** wherein the target coding is a substantial linear variation in spectral brightness along said self-coordinate.

16. A simulator according to claim **5** wherein the target coding is a variation in color along said self-coordinate.

17. A simulator according to claim **5** wherein the target coding is a variation in both brightness and color along said self-coordinate.

18. A simulator according to claim **5** including a computer for producing an object signal representative of the object as viewed from an object vantage point wherein, and means for supplying said object signal to the monitor whereby the scene being televised by the first camera and a representation of the object are superimposed on the monitor screen.

19. A simulator according to claim **5** including a light source and means for generating the shadow of the object on the target when the object is closer to said light source than the portions of the target whereby mating of a point on the object with the target is observable on the monitor when the distance between said point and the shadow decreases to zero.

20. A method for practicing the mating of an observer-controlled object with a target comprising the following steps:

(a) generating on a television monitor a composite view of both the target and the object with the object occluding the target when the object is closer than the target to the viewer;

(b) generating the shadow of the object on the target; and

(c) determining engagement of a point on the object with the target by the spacing between said point and the shadow.

* * * * *