DRL 59
DRD SE-9

DOE/JPL-954887-78/4
Distribution Category UC-63

LSSA LARGE AREA SILICON SHEET TASK
CONTINUOUS CZOCHRALSKI PROCESS DEVELOPMENT

Texas Instruments Report No. 03-78-46

Annual Report

October 1977 - September 1978

Samuel N. Rea

October 1978

JPL Contract No. 954887

Texas Instruments Incorporated
P. O. Box 225012
Dallas, Texas 75265

JAN 1979
RECEIVED
FACILITY

(NASA-CR-158042) LSSA LARGE AREA SILICON SHEET TASK CONTINUOUS CZOCHRALSKI PROCESS DEVELOPMENT Annual Report, Oct. 1977 - Sep. 1978 (Texas Instruments, Inc.) 53 p HC A04/MF A01 CSCL 10A G3/44

N79-14554

Unclas
41955

The JPL Low-Cost Silicon Solar Array Project is sponsored by the U.S. Department of Energy and forms part of the Solar Photovoltaic Conversion Program to initiate a major effort toward the development of low-cost solar arrays. This work was performed for the Jet Propulsion Laboratory, California Institute of Technology by agreement between NASA and DOE.

This report was prepared as an account of work sponsored by the United States Government. Neither the United States nor the United States Department of Energy, nor any of their employees, nor any of their contractors, subcontractors, or their employees, makes any warranty express or implied, or assumes any legal liability or responsibility for the accuracy, completeness or usefulness of any information, apparatus, product or process disclosed, or represents that its use would not infringe privately owned rights.

ABSTRACT

A Czochralski crystal growing furnace was converted to a continuous growth facility by installation of a premelter to provide molten silicon flow into the primary crucible. The basic furnace is operational and several trial crystals have been grown in the batch mode.

The key element in this continuous Czochralski process is the premelter and considerable effort has been expended in developing a suitable design. Numerous premelter configurations have been tested both in laboratory-scale equipment as well as in the actual furnace. The best arrangement tested to date is a vertical, cylindrical graphite heater containing small fused silicon test tube liner in which the incoming silicon is melted and flows into the primary crucible. The premelter is positioned immediately over the primary melt.

Economic modeling of the continuous Czochralski process has continued utilizing the IPEG option of SAMICS. The influence of both crystal size and total furnace run size have been examined. Results of these studies indicate that for 10-cm diameter crystal, 100-kg furnace runs of four or five crystals each are near-optimal. Costs tend to asymptote at the 100-kg level so little additional cost improvement occurs at larger runs. For these conditions, crystal cost in equivalent wafer area of around $\$20/m^2$ exclusive of polysilicon and slicing is obtained.

PRECEDING PAGE BLANK NOT FILMED

TABLE OF CONTENTS

Section		Page
	INTRODUCTION	1
II.	TECHNICAL DISCUSSION	2
	A. Furnace Design and Construction	3
	1. Lower Dome	3
	2. Upper Chamber	3
	3. Auger Feed	3
	4. Silicon Hopper	3
	5. Hot Zone	3
	6. Miscellany	4
	B. Premelter Development	4
	C. Additional Considerations	7
	1. Continuous Czochralski Doping	7
	2. Crystal Pull Rate	8
	3. Thermal Modeling	8
	D. Economic Analysis	9
	1. Basic Assumptions	9
	2. IPEG Inputs	9
	3. IPEG Cost	10
	4. Total Crystal Cost	11
	5. Total Wafer Cost	11
	6. Cost Sensitivity	11
	7. Cost Discussion	13

TABLE OF CONTENTS (Continued)

Section		Page
III.	CONCLUSIONS AND RECOMMENDATIONS	14
IV.	NEW TECHNOLOGY	14
V.	PLANS FOR NEXT QUARTER	14
VI.	PROGRAM COST	15
VII.	REFERENCES	16

APPENDICIES

A. Engineering Drawings
B. Economic Model Backup

LIST OF ILLUSTRATIONS

Figure	Title	Page
1	Continuous Czochralski Silicon Furnace	17
2	Program Plan	18
3	Auxiliary Crucible Vertical Split Tube	19
4	Auxiliary Crucible Half-Tube Design	19
5	Auxiliary Crucible Heater: Split-Tube Design	20
6	Integral Auxiliary Heater/Crucible	20
7	Theoretical Maximum Pull Rates of Continuous Versus Single Charge Czochralski Silicon Crystal Growth	21
8	Combined Melt/Crucible Heat Losses During Crystal Growth	21
9	Combined Melt/Crucible Heat Losses as a Function of Crucible Size	22
10	SAMICS/IPEG Continuous Czochralski Crystal Cost Expressed in Equivalent Slice Area	22
11	SAMICS/IPEG Cost Projections of a Continuous Czochralski Wafer Process	23
12	Effect of Furnace Run Size on Continuous Czochralski Add-on Cost	23
13	Effect of Crystal Size on Continuous Czochralski Add-on Cost	24
14	SAMICS/IPEG Cost Breakdown of a Continuous Czochralski Wafer Process	24
15	Program Labor Hours	25
16	Total Program Cost	25

LIST OF TABLES

Table	Title	Page
I.	Cost Parameters for Various Run Sizes	12
II.	Cost Parameters for Various Crystal Sizes	12

CONTINUOUS CZOCHRALSKI PROCESS DEVELOPMENT

Texas Instruments Incorporated

Annual Report
October 1977 - September 1978

I. INTRODUCTION

This program is to demonstrate feasibility of a continuous Czochralski process employing liquid silicon melt replenishment during growth. An incoming flow of solid granular or nugget polysilicon will be premelted in a small auxiliary crucible from which liquid silicon will be introduced into the main or primary crucible. Liquid melt addition is being pursued since this replenishment technique should cause minimal thermal and mechanical disturbances to the primary melt thereby allowing high crystal productivity.

Continuous Czochralski is defined here as the growing of several crystals from a single liner with continual melt replenishment during growth. The process is interrupted periodically in order to remove completed crystals after they have grown to some maximum predetermined size. During crystal removal the hot zone is maintained under power with the silicon in the crucible remaining molten.

The technical thrust of this program is to demonstrate silicon crystal growth under continuous, steady state conditions. The specific goals are:

1. Liquid silicon feed into the crucible which will be capable of using a variety of polysilicon forms.

2. 10-cm diameter crystal growth,

3. 10 cm/h crystal growth rate,

4. 100 kg crystal output from a single crucible.

In addition to the specific goals above, several common-sensical guidelines suggest themselves as being desirable in a new generation of crystal growth furnaces:

1. Minimal furnace component count,

2. Low complexity, low-cost components,

3. Easy maintenance,

4. Low energy consumption,

5. Minimum equipment size.

In keeping with these general design guidelines Texas Instruments has constructed the furnace illustrated in Figure 1. A Varian 2848A puller was modified extensively to permit continuous silicon feed. Modifications included a new lower chamber, addition of a high-temperature vacuum valve, and a modified upper chamber to accept a Hamco cable seed pull mechanism equipped with crystal weight readout. In addition, the polysilicon storage and feed components depicted in Figure 1 were constructed. The vibratory hopper supplies granular, chunk, nugget, or fine polysilicon to an auger feed. A variable speed auger drive transports the silicon to a melt station where the polysilicon is melted in an auxiliary crucible and then flows into the primary crucible. The furnace operates under vacuum with argon purge.

All the components in the continuous furnace are either off-the-shelf items or fairly straightforward in design. The major technical obstacle is the design of the auxiliary crucible/melter. A cost estimate indicates that this crystal growth machine should sell for less than $125 K each.

Economics of this continuous Czochralski process have been modeled extensively using SAMICS/IPEG costs. Results of this modeling indicate that 100-kg furnace runs consisting of four crystals are near-optimal. Crystal cost, exclusive of polysilicon and slicing costs, is around $20/M^2$ assuming a realistic conversion efficiency of crystal to slices.

II. TECHNICAL DISCUSSION

The technical discussion roughly parallels the program plan shown in Figure 2. As a perusal of that figure indicates, approximately one-third of the program consisted of equipment design, one-third in construction, and the rest in demonstration runs and miscellaneous activities such as auxiliary melter testing and thermal and economic modeling. As of this report all equipment is operational and the demonstration/modification phase has begun.

A. Furnace Design and Construction

1. Lower Dome

A new lower chamber was designed and built to accept the vacuum valve, auger feed, and auxiliary melter. A flat-top chamber was utilized in order to minimize overall puller height. The chamber is double-wall construction with water cooling. A 25-cm (10-inch) diameter side appendage 13 cm (5 inches) long is integral with the lower chamber to provide room for the auger feed and auxiliary melter. Engineering drawings of the chamber are contained in Appendix A.

2. Upper Chamber

The existing upper chamber of the Varian 2848A furnace is being utilized with the addition of transition sections designed and built to mate the vacuum valve and to attach the Hamco cable pull mechanism. Other minor modifications were effected in order to use the existing chamber lift mechanism.

3. Auger Feed

A commercial auger was purchased from Thomas Conveyor of Fort Worth, Texas. The auger is 3 inches ID and approximately 3.5 feet long and is constructed of stainless steel. It is driven by a 3/4 hp variable speed DC motor purchased from Hampton Products in Rockford, Ill. The auger assembly is vacuum tight being sealed at the motor end by a dual o-ring design having intermediate vacuum pumping. This arrangement has proven to be virtually leak-free in tests to date.

4. Silicon Hopper

The hopper is constructed of stainless steel and is designed to hold 100 kg of silicon fines whose average density is approximately 40% that of solid silicon. The hopper lid is aluminum with an o-ring seal at the top flange. An Eriez Magnetic vibrator is attached to the conical exit section to prevent material clogging. Details of the hopper are in Appendix A.

5. Hot Zone

A careful assessment of the heater, heat shield package, and chamber space available indicates that the standard Varian 2848A 12-kg configuration is adequate. Thus, no modifications to the hot zone were made.

6. Miscellany

The stainless steel vacuum valve between the lower and upper chamber is water-cooled and pneumatically operated. Throat diameter is six inches. The valve was manufactured by VAT of Switzerland and was purchased through HPS Corporation in Denver, Colorado.

The Hamco cable pull seed lift was purchased with the crystal weight readout option to enable melt level control. The calibrated auger feed rate will be adjusted to balance the rate of crystal withdrawal thereby maintaining a stationary melt level. No active feedback control will be installed at present but can be effected once the basic puller concept is proven.

An auxiliary control panel for the melter, hopper, auger, and crystal weight controls and readouts was constructed. This panel was attached to the top of the existing Varian puller control console.

B. Premelter Development

The key technical challenge in this approach to a continuous puller is designing a suitable auxiliary crucible which will supply the liquid feed to the primary crucible. By premelting the silicon in a small crucible the auxiliary power requirements can be minimized and crucible/heater costs can be held to a minimum. To maintain a constant melt level in the primary crucible while growing a 10-cm crystal at 10 cm/h, a 1838 g/h flow of silicon into the crucible is required. The power required to melt this flow starting from room temperature is around 1.5 kW. However, early experimental work with various premelter design indicated a power supply around 6 kW would be required to overcome heat losses and provide sufficient heat to melt the incoming silicon rapidly.

Initial experiments to determine a workable heater/crucible design utilized a small RF power supply operating at 5 MHz. At this frequency it was not possible to load directly into small polysilicon nuggets so a graphite sleeve was placed over the quartz tube crucible to provide a load for the RF power. Some success was achieved in melting silicon using this setup. A careful assessment of the pros and cons of RF power indicated, however, that a RH (resistance-heated) auxiliary crucible had many advantages. For instance, initial cost is lower, heater design is simpler, and maintenance is considerably less for a RH power supply as opposed to a RF design. Consequently, subsequent work has focused on RH auxiliary crucibles.

A laboratory-scale experimental setup was assembled to test various premelter configurations. This work was done in a small sand quartz reactor tube 24 cm ID by 46 cm long under a 1-atm argon ambient. A 400A, 12V power supply was utilized. The first design tested was a vertical split-tube configuration shown in Figure 3 fabricated from high-density purified graphite. The tube OD was 2.5 cm, the silica liner ID was 1.0 cm, and overall length was 20 cm. The original design had a 3 mm orifice in the base of the liner and silicon was caused to flow from the tube by pressurizing with argon while granular silicon fines were being added. The flow of material through the orifice, even with larger openings, was never controllable (due to the high surface tension of the melt) under the experimental conditions. The major limitation was that of achieving a sufficiently high temperature to assure maximum fluidity of the melt.

A half-tube resistive element design was then tested with a fused silica boat positioned horizontally as shown in Figure 4. Inside diameter of the heater was 5.0 cm and length was 15 cm. The maximum available power input to the element (4.8 kW) was barely sufficient to melt the silicon and insufficient to cause the melt to flow from the spout. Again, the temperature acheived was only slightly above the silicon melting point. A large amount of heat was lost to the environment and the chamber containing the heating element was inadequately sealed and purged to completely eliminate oxygen back-diffusing into the system. The "dross" or skin formed on the melt surface greatly inhibited melt flowability.

The half-tube design of Figure 4 was carried one step further to the cylindrical design of Figure 5. This cylindrical design provided substantially greater temperatures in the silicon since the graphite heater served as its own heat shield. Dimensions of the heater were approximately the same as the half-tube; 5 cm ID by 16 cm long. The quartz boat of Figure 4 was placed inside the heater to serve as a crucible. The premelter was wrapped with several layers of graphite felt for additional insulation and no problems were encountered in achieving melts with approximately 4 - 4.2 kW power input. However, melt solidification in the crucible exit spout prevented good liquid flow from the crucible. Also, extreme devitrification of the fused silica boat was observed due to the high temperatures achieved in efforts to effect silicon flow.

The Figure 5 premelter configuration was then altered slightly to utilize silicon boats containing a vertical exit spout in the bottom extending through a hole in the graphite heater. This arrangement was successful in providing molten flow from the premelter. However, the nonwetting of the fused silica by the molten silicon caused the silicon to ball up and not flow out of the crucible in a continuous stream. Instead, the silicon exited the crucible in discrete globules which would probably create a high level of melt agitation

in the primary crucible.

The most straightforward approach to overcoming the nonwetting and devitrification associated with fused silica crucibles is to eliminate the crucible altogether. This was tried by making an integral heater/crucible using the Figure 5 heater design. Graphite end plates were glued to the heater using Dylon GC graphite cement. A graphite exit nozzle was screwed into a threaded hole drilled through the bottom of the heater and the entire assembly was SiC-coated. This crucible is illustrated in Figure 6.

Results in laboratory tests with the integral heater crucible were moderately encouraging. The intimate contact between silicon and heater provided rapid, efficient melting and the exit flow more nearly resembled a stream than did the previous approaches. However, some plugging in the exit nozzle was observed due to inadequate power available from the small power supply. The thermal environments in the test chamber was quite different from that of a puller under power and operating at 20 mm Hg pressure. Consequently, it was decided to discontinue premelter development work in the test chamber and begin using the continuous puller which was now completed and ready for testing.

The various technical and operational difficulties uncovered in laboratory work with the horizontal premelter configurations of Figures 4 - 6 caused a re-evaluation of the "test tube" premelter design of Figure 3. This design offers several advantages over the horizontal configurations: (1) the heater is relatively easy to fabricate, (2) heating is efficient, (3) the premelter can be positioned directly over the primary melt and in close proximity to minimize melt splashing, and (4) minimal premelter insulation is required since the primary crucible and melt provide a built-in thermal barrier to heat losses. Thus, the premelter approach illustrated in Figure 3 was selected for testing in the continuous puller.

The graphite heating element was machined with a 38 mm ID and was 140 mm long. Initial testing to date has utilized either SiC-coated or bare graphite so that the heater formed its own crucible. The auxiliary power supply for the continuous puller premelter can provide 9kVA (600A at 15V) and this power is supplied to the premelter through water-cooled copper electrodes bolted to the premelter top flange with tantalum bolts. In tests thus far the premelter has been positioned 30° from vertical angled into the primary crucible. Silicon fines are fed into the open top by the auger feed system. The primary crucible was loaded with 4 kg silicon which was maintained in the molten state during premelter testing. No attempts were made to grow crystal while testing the premelters.

Several experimental runs were made at first with the bare graphite heaters. These runs showed feasibility in that the incoming silicon could be melted and caused to flow into the primary crucible. However, the molten silicon reacted rapidly with the bare graphite premelter and the large volume expansion which occurs when silicon reacts with graphite to form SiC caused severe cracking of the heater. Once the heater cracked, electrical continuity was lost and the heater cooled down below the silicon melting point thereby terminating the test.

Somewhat better results were obtained with SiC-coated premelters. The coating generally prevented gross heater cracking although eventually during a test run some cracking would occur probably from silicon-graphite reactions at small pinholes in the coating.

Even without the cracking another problem with the combination heater/crucibles was the tendency of the molten silicon to fill the slit forming the two electrode halves. The silicon surface tension was sufficient to hold it in the slit creating an electrical short. This short would lower the current density near the heater tip causing it to cool below the silicon melting point.

In view of the several problems encountered in using the various combination heater/crucible premelters it was decided to insert fused silica "test tube" crucibles into the cylindrical heaters. This is the arrangement illustrated in Figure 3. As of this report date testing has not yet begun with the test tube crucibles.

C. Additional Considerations

1. Continuous Czochralski Doping

An analysis of dopant impurity levels in a continuous Czochralski process indicates that the crystal resistivity can be held constant during growth. Details of the analysis are omitted but the general result for crystal resistivity under continuous growth is:

$$\rho/\rho_i = \frac{kC_{li}}{C_r - (C_r - kC_{li}) \exp(-kV_s/V_o)} \qquad (1)$$

where

C_{li} = initial melt dopant concentration
C_r = incoming melt replenishment concentration
V_s = crystal volume grown
V_o = primary crucible melt volume
k = dopant segregation coefficient
ρ_i = initial crystal resistivity, $V_s = o$

Equation (1) indicates that, without special precaution, the crystal resistivity will continually decrease as more crystal is grown due to the exponential term in the denominator. However, if $C_r = k\ C_{li}$, the exponential term drops out and the resistivity will remain constant, independent of crystal volume, V_s, grown. Thus, the incoming feed stream should be doped to a level $k\ C_{li}$ in order to maintain constant axial crystal resistivity profiles.

In the case of minor impurities inherent in the polysilicon (Al, Cu, Ti, etc.), $C_r = C_{li}$ and the reciprocal of equation (1) reduces to the result given in reference 1.

2. Crystal Pull Rate

The crystal growth model developed in reference 2 was utilized to model 10-cm growth. Figure 7 shows theoretical maximum pull rates for continuous versus single charge pulls from 12-kg crucible melts. At the longer crystal lengths, continuous growth provides a 25% pull rate advantage over batch growth. The indicated 19 cm/h continuous pull rate offers a comfortable margin over the 10 cm/h goal of this program.

3. Thermal Modeling

A thermal model of the melt/crucible/crystal was developed to examine heat losses from these elements as a function of various parameters such as operational mode, crucible size, and crystal size. Figure 8 compares heat losses to the furnace ambient for single charge versus continuous crystal pulling. That figure assumes a nominal 10-inch crucible liner from which a 10-cm diameter crystal is growing. In the batch charge mode heat losses from the melt and crucible continually increase as the crystal grows which means that furnace power must increase proportionally to maintain thermal equilibrium. On the other hand, continuous growth offers a fairly stable heat load to the furnace which implies that temperature control of the melt would be more easily attained in this case.

Figure 9 illustrates the influence of crucible size on heat losses from the melt and crucible for continuous growth. A band is obtained because of the variation of the losses with crystal length. For instance, a 10-cm crystal growing from a nominal 10-inch liner (24.5 cm ID) will produce a heat loss varying from 8.5 to 10.2 kW as can be verified from Figure 8. Figure 9 suggests that there is a practical upper limit on crucible diameter and 35 cm (14 inches) may be approaching that limit. At this and larger diameters heat shielding may be necessary to keep heat losses to a manageable level.

D. Economic Analysis

The IPEG option of SAMICS was used to estimate costs of the continuous Czochralski process under development. Fairly conservative assumptions were made regarding labor, supplies costs, and yields. A 100-kg furnace run results in 544 cm of 10-cm diameter crystals. For a baseline process it is assumed that seven crystals, each of 78 cm length, will be grown in one run for a total of 546 cm crystal at 100% yield. A summary of the basic model assumptions is given below with backup information in Appendix B.

1. Basic Assumptions

a. 100-kg furnace run
b. 10-cm diameter crystal pulled at 10 cm/h
c. Equipment cost is $121,000
d. Equipment utilization is 83%
e. Furnace floor space is 150 ft^2
f. Run cycle time is 78.6 h
g. Two pullers per operator
h. Direct labor cost $5.00/h
i. Operating supplies are $516/furnace run
j. Power per run is 3800 kW-h at $0.03/kW-h
k. 100% yield/run is 85.77 m^2 in slice equivalent area based on 20 slices/cm crystal
l. Multiblade slicing cost is $27/$m^2$ at 95% saw yield

The above cost assumptions are in 1978 dollars. Later these costs will be adjusted back to 1975 dollars per the IPEG inflation factors in order to remain compatible with the 1982 cost goals.

2. IPEG Inputs

a. Furnace Runs/Year

With the assumed 83% utilization factor applied to a 24 h day, 364 day year the furnace runs/yr are:

Runs/year = (0.83)(24)(364)/78.6 = 92.6

b. Direct Labor

Labor/run = (78.6 h)($5.00/h)/2 = $196.50

Direct labor/year = (196.50)(92.6) = $18,196

c. Operating Materials

From Appendix B the materials costs/run are $515.92.

The annual materials costs are:

MATS - ($515.92)(92.6) = $47,774.19

d. Utilities

The only utilities cost of consequence is the electrical power per run assumed at $0.03/kW-h.

Cost/run = (3800 kW-h)($0.03) = $114

Utilities/year = ($114)(92.6) = $10,556.40

e. Crystal Output

At 100% yield, 546 cm crystal will be produced, which, at 20 slices/cm yields 85.765 m^2 per furnace run. Then,

Output/year = (85.765)(92.6) = 7941.88 m^2/yr

3. IPEG Cost

The IPEG cost model uses the equation:

$$\text{Cost} = (0.49 * \text{EQPT} + 97 * \text{SQFT} + 2.1 * \text{DLAB} + 1.3 * \text{MATS} + 1.3 * \text{UTIL})/\text{QUAN}$$

where

EQPT = equipment cost = $121,000
SOFT = space requirements per furnace = 150 ft^2
DLAB = annual direct labor = $18,196
MATS = annual materials cost = $47,774
UTIL = annual utilities cost = $10,556
QUAN = annual output = 7941.88 m^2

With these parameters the IPEG cost is $23.65/$m^2$. Deflating this cost back to 1975 dollars using the 1.203 inflation factor gives a 1975 equivalent cost of $19.66/$m^2$ at 100% crystal yield.

4. Total Crystal Cost

Polysilicon expense can be added easily to the above crystal processing cost using 104.58 kg/run and the same slice equivalent area. Total crystal costs are shown in the table below for unburdened polysilicon in 1975 dollars.

Poly Cost	1975 Crystal Cost-100% yield
\$0/kg	\$19.66/m^2
10	31.85
25	50.14
60	92.82

Figure 10 shows the above crystal costs as a function of yield. On a grams in — grams out basis a crystal yield of 80% or better should be feasible in a continuous process.

5. Total Wafer Cost

Crystal slicing costs must be added to the above to arrive at the final slice value. Based on past experience with multiblade sawing[2], a 1975 IPEG sawing cost in the neighborhood of \$27/m^2 appears feasible. When this value is added to the various crystal costs, total wafer costs represented in Figure 11 are obtained. With an 80% crystal yield, a wafer cost around \$90/m^2 is indicated which is comfortably below the JPL 1982 goal of \$128/m^2.

6. Cost Sensitivity

The sensitivity of crystal cost to run size and crystal size were estimated using the previous cost assumptions. However, operating supplies costs were altered slightly. These supplies were assumed \$248/run exclusive of argon and crystal seeds up to the 100 kg run level. For runs larger than 100 kg, supplies were increased 1% per kilogram per run. Thus, a 120-kg run would consume (\$248)(1.2) = \$297.60 in operating supplies. In addition, argon costs, which are proportional to cycle time, were lowered to \$1/h which is more nearly in line with recent actual operating experience.

a. Furnace Run Size

The sensitivity of crystal cost to run size was examined assuming a crystal weight of 20 kg exclusive of bottom taper. This crystal weight is convenient from a handling and length standpoint and is compatible with current practice. Table I gives pertinent data for this case along with the yearly costs used in IPEG.

TABLE I

COST PARAMETERS FOR VARIOUS RUN SIZES

Run Size	Poly Charged	Cycle Time	Power	Runs/yr	Labor/yr	Mat'ls/yr	Utilities/yr	Wafers/yr
20 kg	20.6 kg	16.9 h	740 kW-h	429.0	$18,127	$116,115	$ 9,524	7345 m^2/yr
40	41.3	30.8	1420	235.4	18,127	68,327	10,028	8061
60	61.9	44.7	2100	162.2	18,127	50,258	10,219	8331
80	82.5	58.6	2800	123.7	18,127	40,753	10,391	8472
100	103.2	72.5	3530	100.0	18,127	34,905	10,590	8561
120	122.6	86.4	4180	83.9	18,127	35,089	10,521	8619
140	144.4	100.3	4870	72.3	18,127	35,239	10,563	8665
160	165.1	114.2	5550	63.5	18,127	35,343	10,573	8698
200	206.3	142.0	6930	51.1	18,127	35,511	10,624	8749

TABLE II

COST PARAMETERS FOR VARIOUS CRYSTAL SIZES

NOMINAL 100 kg RUNS

No. Crystals	Crystal Weight	Cycle Time	Runs/yr	Labor/yr	Matl's/yr	Utilities/yr	Wafers/yr
4	25 kg	69.4 h	104.4	$18,127	$35,600	$10,600	8921 m^2/yr
5	20	72.5	100.0	18,127	34,900	10,600	8561
6	16.7	75.6	95.9	18,127	34,300	10,500	8225
7	14.3	78.6	92.6	18,127	33,800	10,500	7942
8	12.5	81.4	89.0	18,127	33,200	10,500	7605
10	9.9	87.0	83.3	18,127	32,400	10,400	7066

A graph of the resulting crystal costs is shown in Figure 12. It is very interesting that the cost curves approach a minimum asymptote at about 100 kg/run. The reason for this is apparent from Table 1. Yearly labor cost per furnace is independent of the number of runs and materials, utilities, and wafer output are essentially constant from 100 kg up. Thus, crystal costs flatten out and become independent of run size. As mentioned, material costs were increased proportional to run size above 100 kg. However, removing this restriction does not alter the fundamental result presented here. If materials were held constant at $248/run, crystal costs at the 200 kg/run level would be only 8% lower than those shown in Figure 12.

b. Crystal Size

The effect of crystal size on add-on costs was examined for a nominal 100 kg run size. Table II presents pertinent parameters for this analysis and Figure 13 shows the results using IPEG. Crystal costs vary almost linearly with the number of crystals/run (crystal size) having a slope of about $0.60/m^2 per crystal. Obviously, productivity is increased the fewer the number of crystals/run so that the yearly wafer output increases the larger the crystal. The ultimate limit would be growing a single 100 kg crystal which would be approximately 16% cheaper than the 4-crystal case in Figure 13. It is desireable to minimize the crystals per run (maximize size) since in addition to cost/productivity improvements accompanying larger crystals there will be fewer furnace operation interruptions with their attendant dangers.

7. Cost Discussion

Figure 14 graphically shows the cost elements for the baseline continuous Czochralski process at the 1982 polysilicon goal of $25/kg. Excluding polysilicon, the total wafer costs are fairly evenly distributed among equipment, labor, materials, and space/utilities. In fact, equipment, labor and materials are equally divided between crystal growth and slicing. Thus, a frontal attack on all cost elements is justified with crystal slicing as important as crystal growth.

All the modeling results presented depend heavily on the underlying assumptions. One key assumption employed here is that 20 slices/cm are produced. With 10-cm crystal this translates into 0.855 m^2/kg crystal which is below the 1.0m^2 kg targeted for 1980[3]. The wafering costs in Figure 14 assume a moderate extension of current multiblade sawing technology. Machines are under development to slice 1000 slices per run[4] which could lower sawing costs by 30-40%. This greater sawing capacity coupled with the 1.0m^2/kg target should lower wafering costs included in Figures 13 and 14 by 50% as well as improve the polysilicon area yield and crystal growth costs. All these advances combined should put continuous Czochralski within shooting distance of the 1986 cost goals.

III. CONCLUSIONS AND RECOMMENDATIONS

The basic furnace is completed and has been tested by growing a couple of crystals. Continuous growth runs are pending final design of a suitable premelter. A wide variety of premelter configurations have been tested with a vertical cylindrical design positioned directly over the primary melt showing the most promise. However, this design consumes a fair amount of space inside the primary crucible so that at least a 12-inch crucible will be necessary in order to grow 10-cm diameter crystals.

Continuing economic modeling indicates that the 100 kg run size goal for continuous growth is an excellent choice. Run sizes larger than this contribute only a very slight improvement in costs. However, as few crystals as practical should comprise the 100 kg runs. Larger crystals improve furnace productivity since less dead time is involved in crystal removal, seed-in, and taper. It appears that four, 25 kg crystals is probably ideal at the present for current furnace designs and sizes.

The economic analyses of continuous Czochralski show that the 1982 price goal of $\$128/m^2$ including polysilicon at $25/kg can be met. The 1986 cost goal of $\$18.20/m^2$ exclusive of polysilicon is more formidable. Several technical breakthroughs will be required especially in the slicing area to achieve a maximum number of slices per ingot.

IV. NEW TECHNOLOGY

The continuous Czochralski furnace concept under development in this program in which a flow of solid silicon is premelted in-situ prior to entering the primary crucible was submitted as a new technology item.

V. PLANS FOR NEXT QUARTER

1. Grow a 3-inch crystal to solar cell specifications in the batch mode for characterization and solar cell fabrication.

2. Complete the premelter design.

3. Demonstrate continuous Czochralski growth.

4. Update the economic model as new information becomes available.

5. Review program with JPL as appropriate.

VI. PROGRAM COST

During the latest quarter 2066 manhours were expended and a total cost of $65,297 was incurred including fee. To date through September 30, 1978 cumulative labor expended is 5443 hours at a total cost of $239,213. Figure 15 shows actual versus planned labor and Figure 16 depicts program costs to date.

VII. REFERENCES

1. R.H. Hopkins, et al., "Silicon Materials Task of the Low Cost Solar Array Project (Part 2), "Fifth Quarterly Report and Summary, ERDA/JPL-954331-77/1, December 1976, p. 78.

2. S. N. Rea and P.S. Gleim, "Large Area Czochralski Silicon, " Final Report, ERDA/JPL-954475-77/4, April 1977.

3. R.G. Wolfson and C.B. Sibley, "Development of Advanced Methods for Continuous Czochralski Growth, " Quarterly Report, DOE/JPL-954884-77/4, January 1978.

4. S.C. Holden and J.R. Fleming, "Slicing of Silicon into Sheet Material, " Quarterly Report, ERDA/JPL-954374-77/4, January 1978.

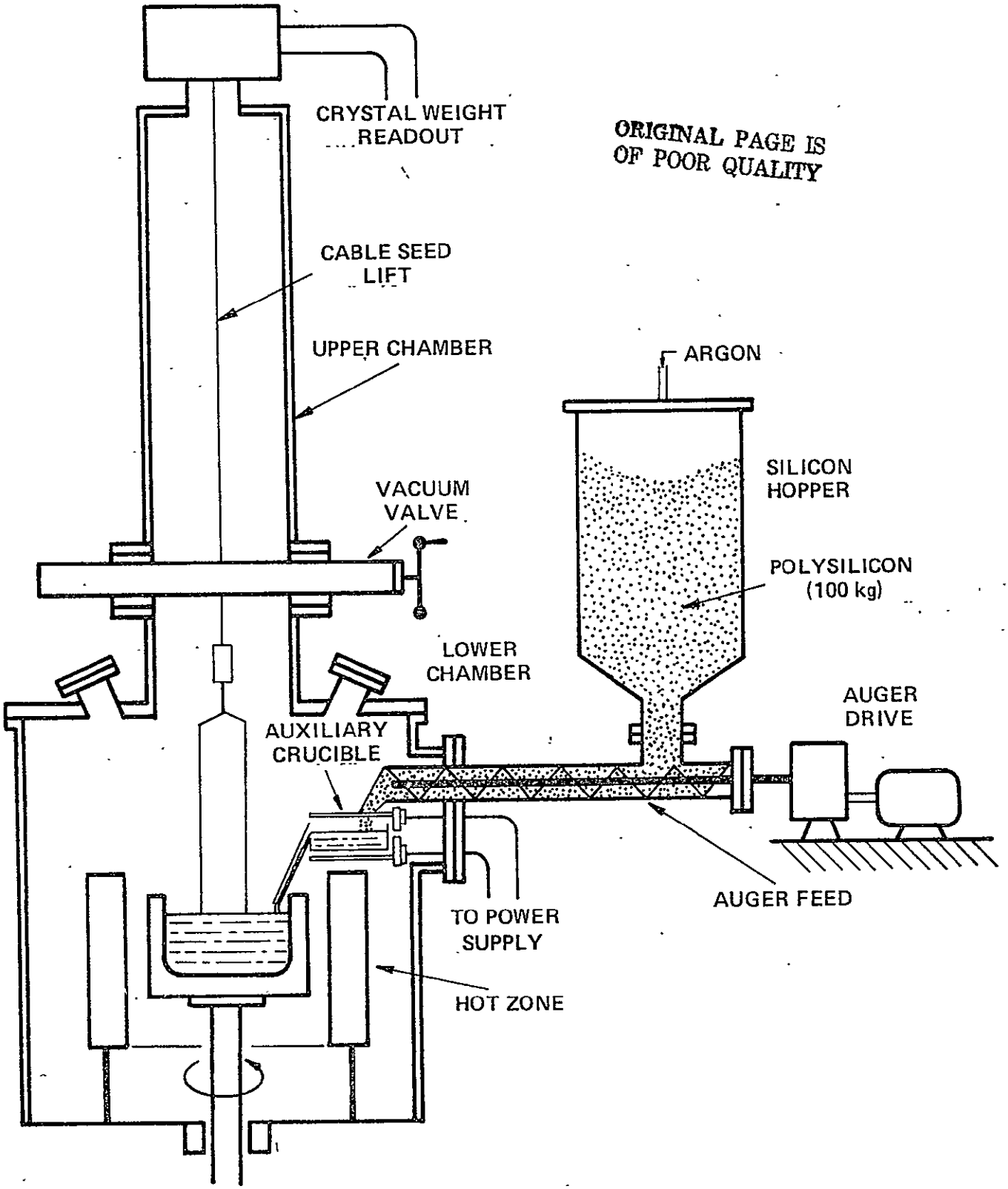

ORIGINAL PAGE IS
OF POOR QUALITY

FIGURE I. CONTINUOUS CZOCHRALSKI SILICON FURNACE

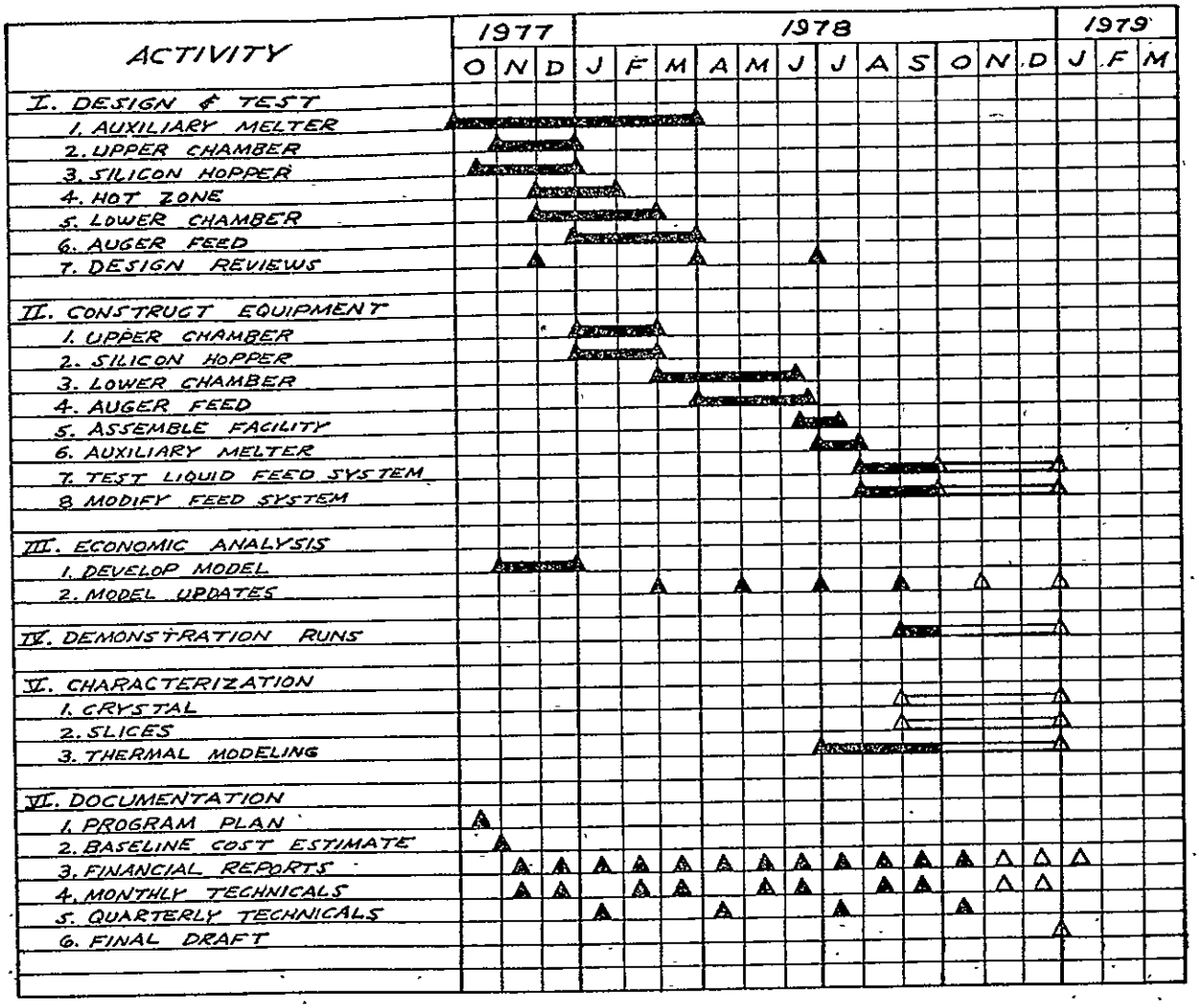

Figure 2. Program Plan

ORIGINAL PAGE IS
OF POOR QUALITY

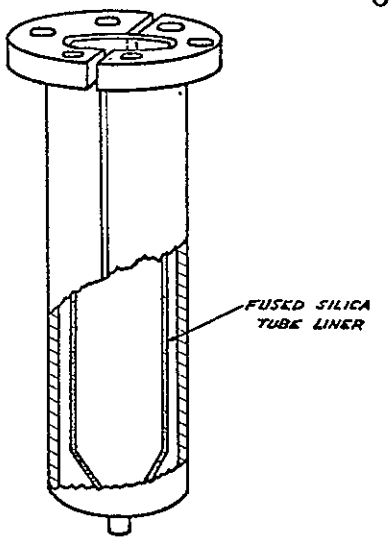

AUXILIARY CRUCIBLE
VERTICAL SPLIT TUBE

Figure 3

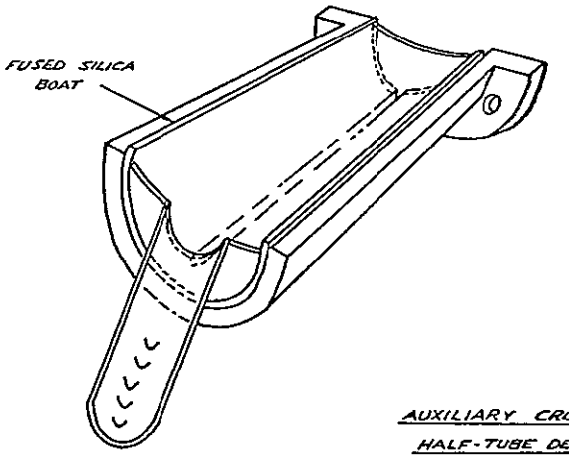

AUXILIARY CRUCIBLE
HALF-TUBE DESIGN

Figure 4

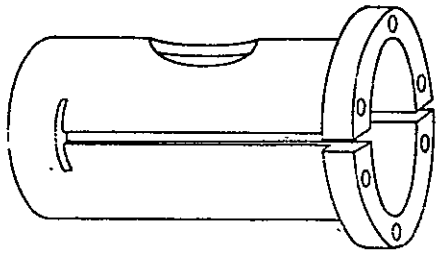

Figure 5. Auxiliary Crucible Heater: Split-Tube Design

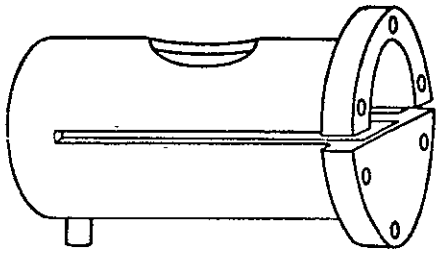

Figure 6. Integral Auxiliary Heater/Crucible

ORIGINAL PAGE IS
OF POOR QUALITY

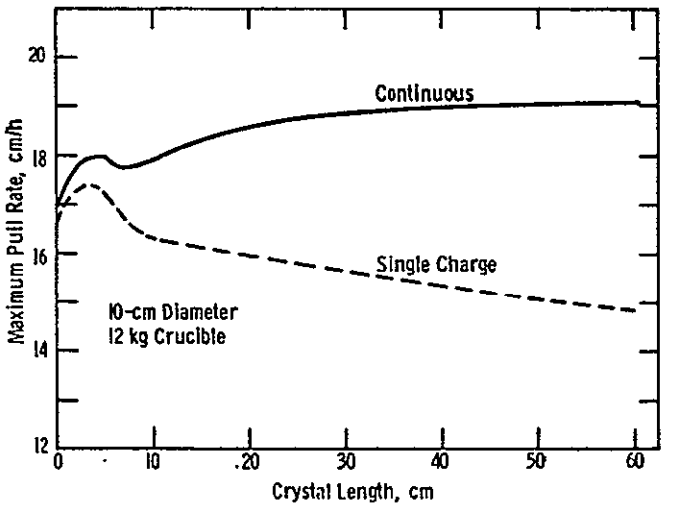

Figure 7. Theoretical Maximum Pull Rates of Continuous Versus Single Charge Czochralski Silicon Crystal Growth

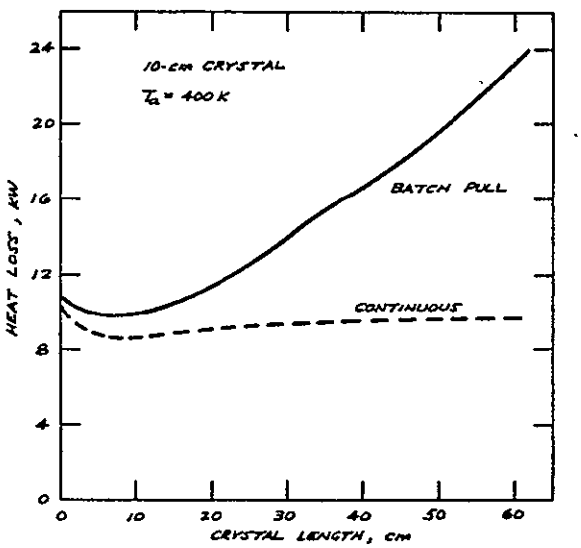

Figure 8. Combined Melt/Crucible Heat Losses During Crystal Growth

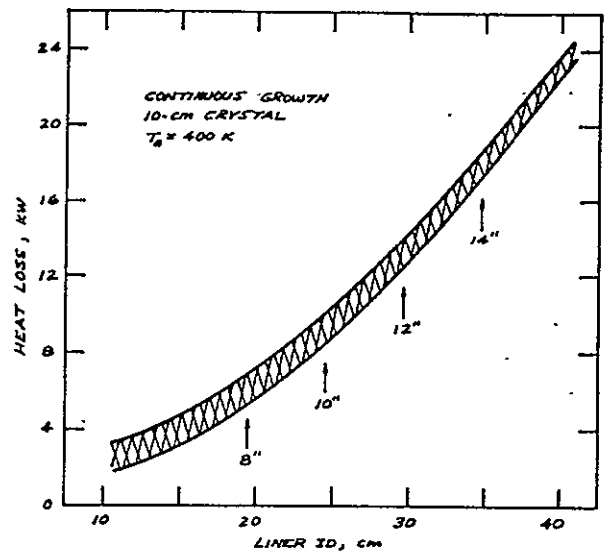

Figure 9. Combined Melt/Crucible Heat Losses as a Function of Crucible Size

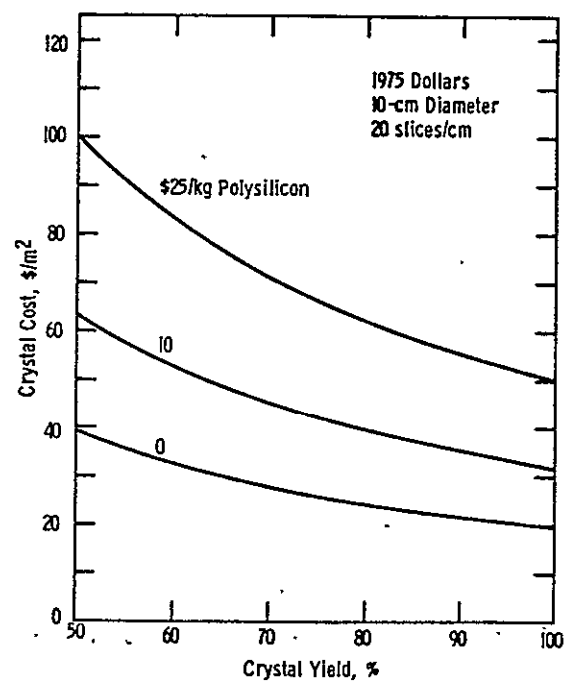

Figure 10. SAMICS/IPEG Continuous Czochralski Crystal Cost Expressed in Equivalent Slice Area

ORIGINAL PAGE IS
OF POOR QUALITY

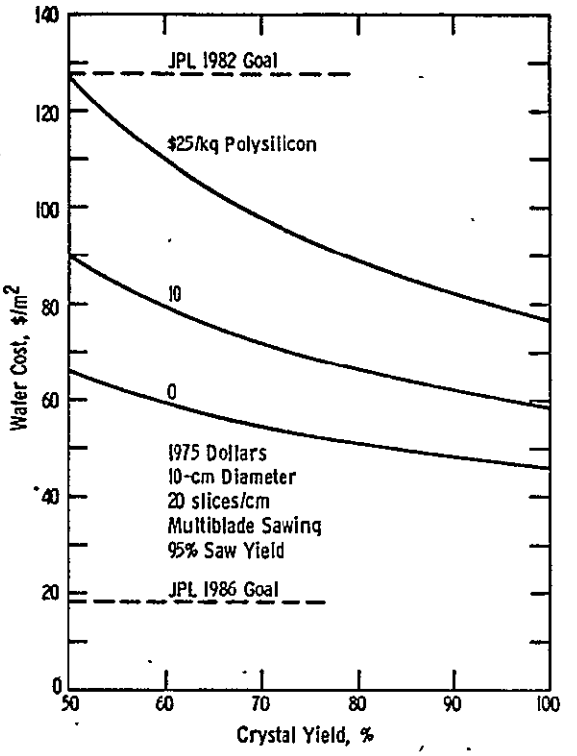

Figure 11. SAMICS/IPEG Cost Projections of a Continuous Czochralski Wafer Process

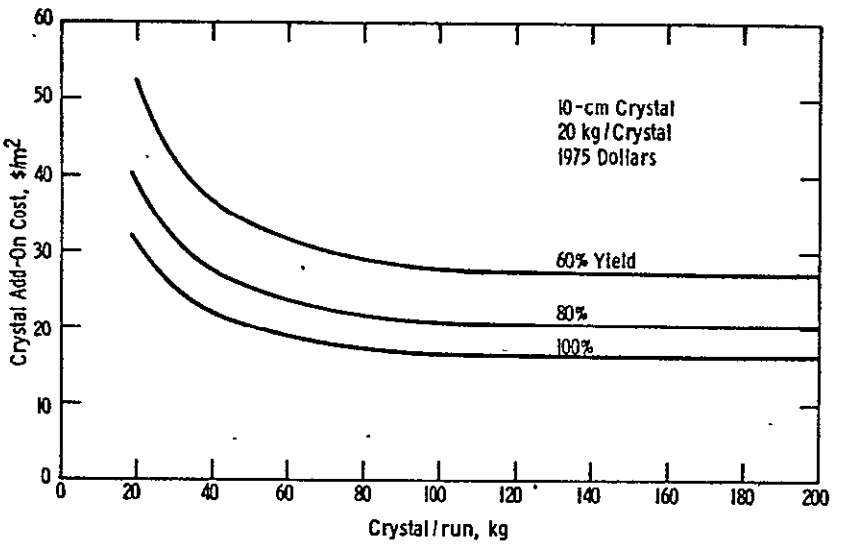

Figure 12. Effect of Furnace Run Size on Continuous Czochralski Add-On Cost

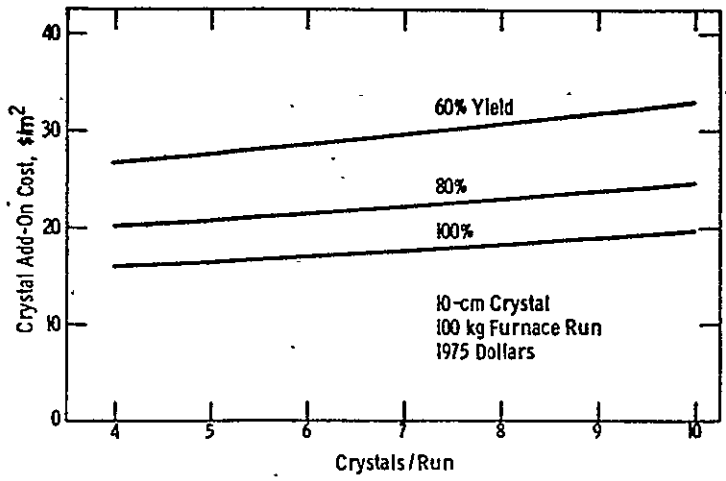

Figure 13. Effect of Crystal Size on Continuous Czochralski Add-On Cost

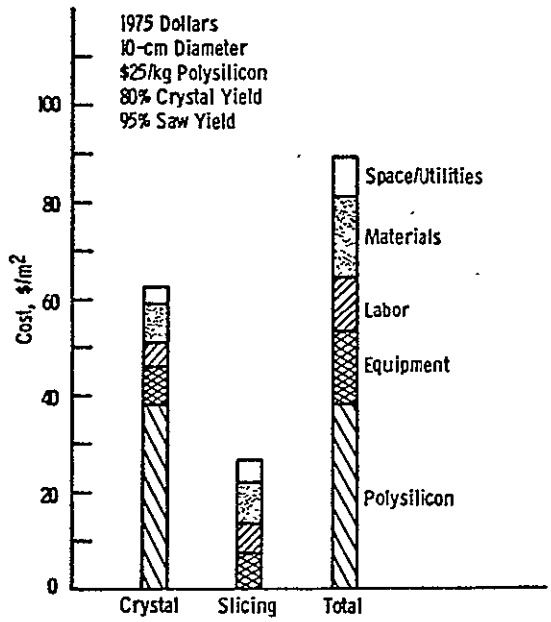

Figure 14. SAMICS/IPEG Cost Breakdown of a Continuous Czochralski Wafer Process

ORIGINAL PAGE IS
OF POOR QUALITY

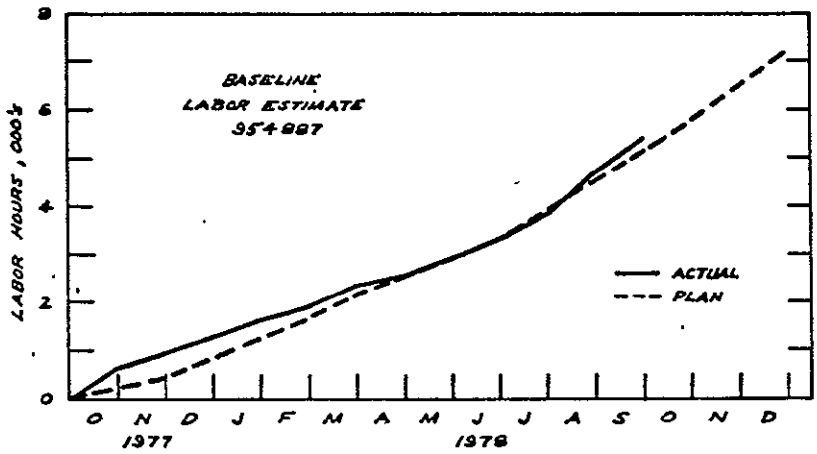

Figure 15. Program Labor Hours

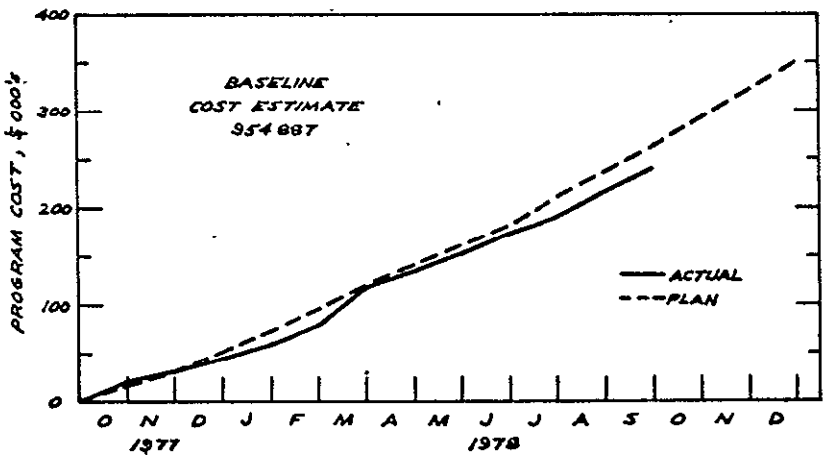

Figure 16. Total Program Cost

APPENDIX A

ENGINEERING DRAWINGS

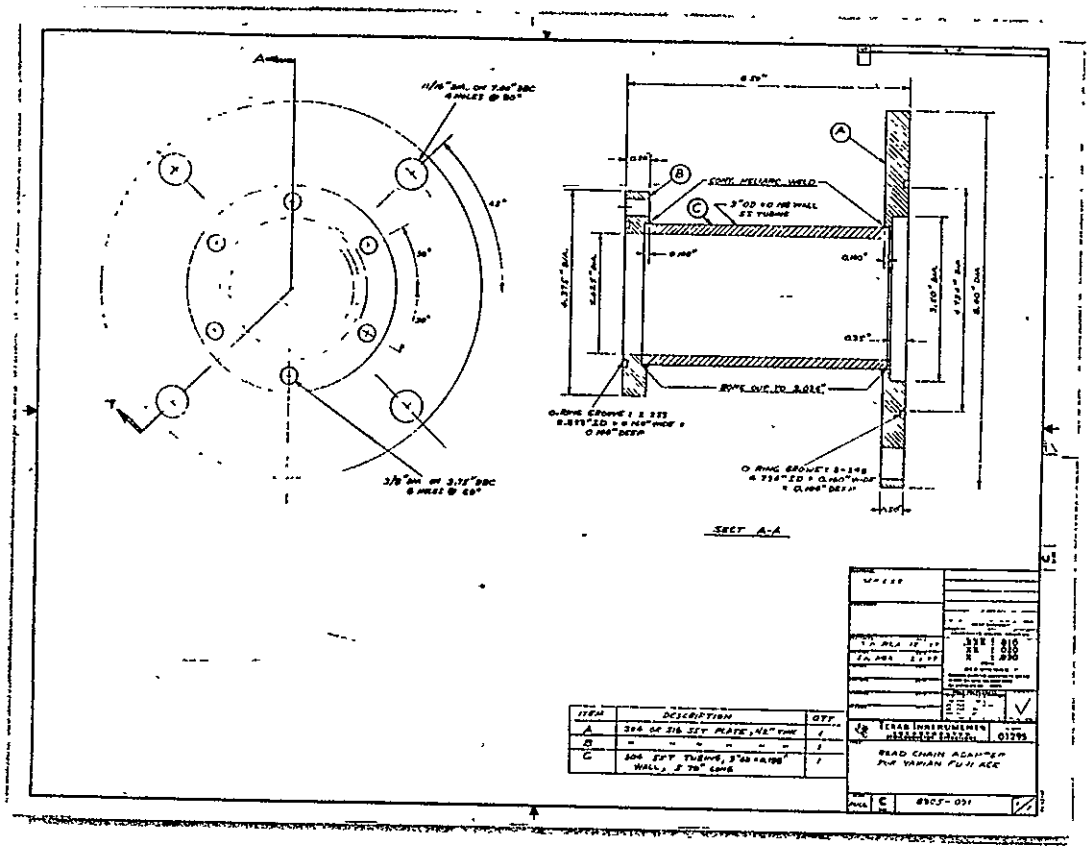

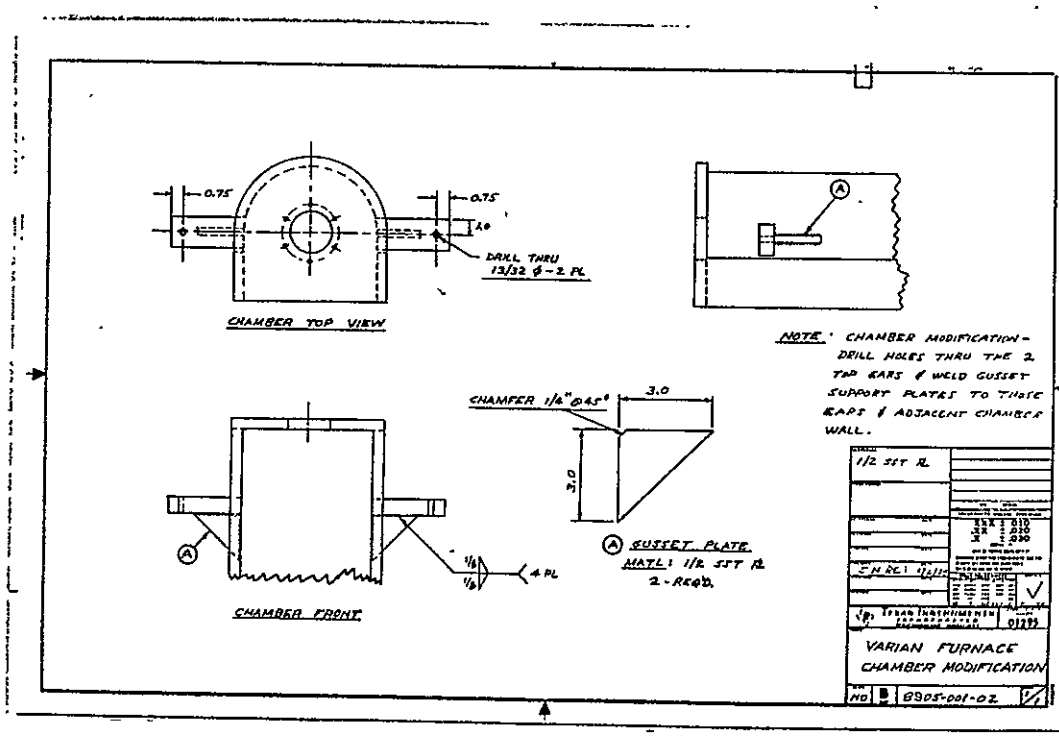

ORIGINAL PAGE IS OF POOR QUALITY

ORIGINAL PAGE IS
OF POOR QUALITY

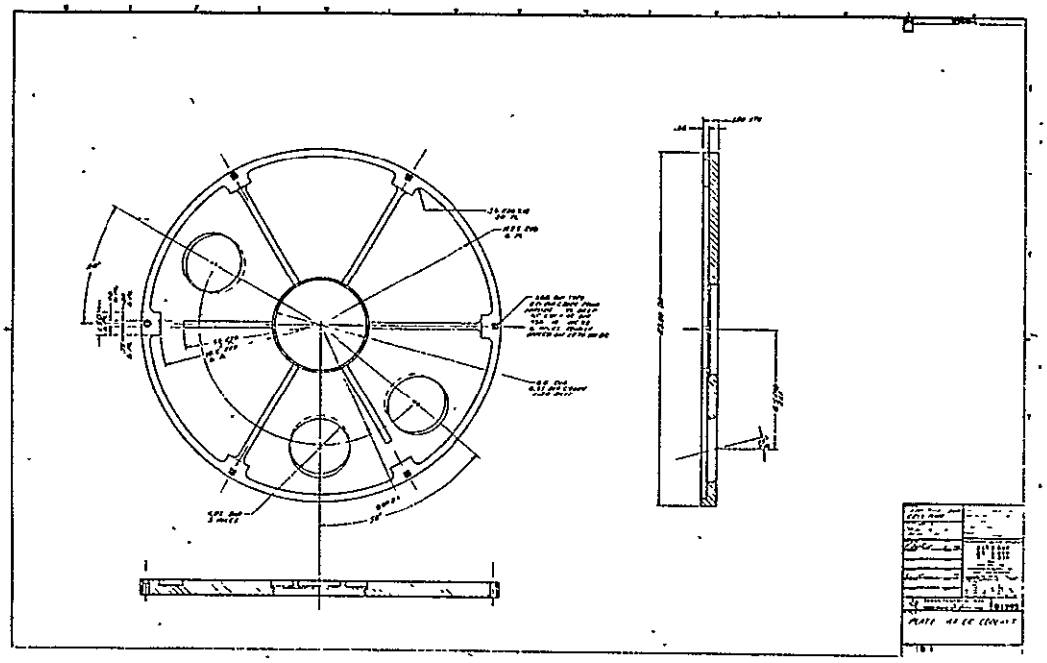

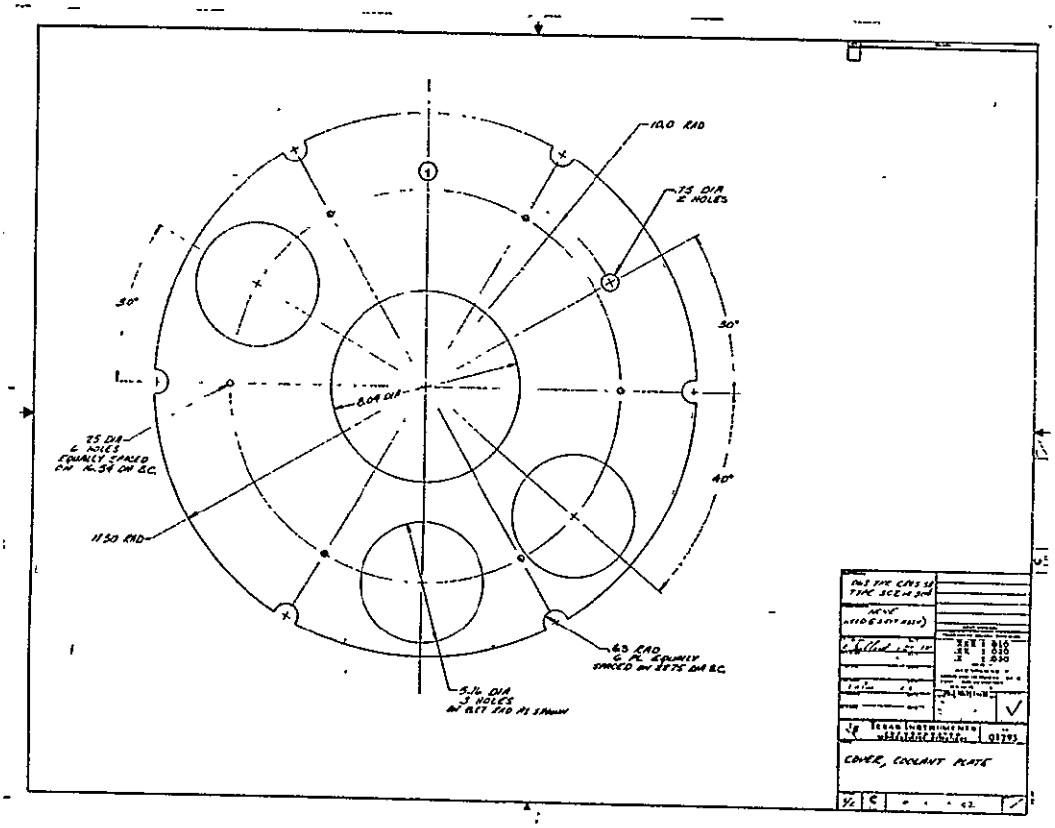

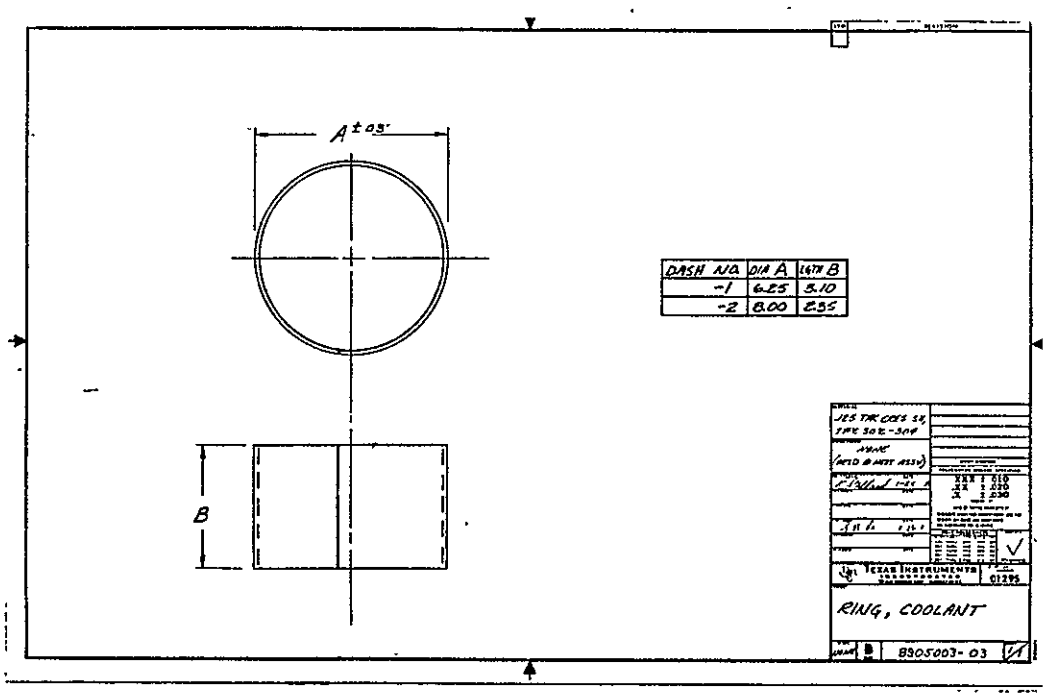
A ±.03
B
DASH NO. | DIA A | LGTH B
-1 | 6.25 | 5.10
-2 | 8.00 | 2.55
TEXAS INSTRUMENTS
01295
RING, COOLANT
B
8905003-03

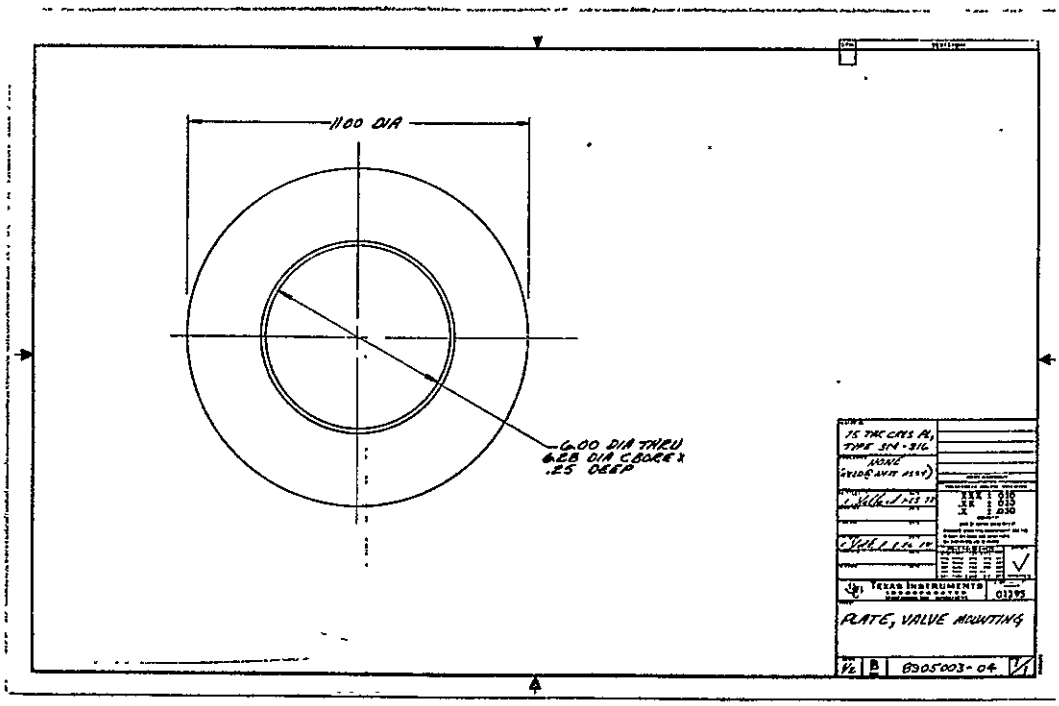
11.00 DIA
6.00 DIA THRU
6.28 DIA C'BORE X
.25 DEEP
TEXAS INSTRUMENTS
01295
PLATE, VALVE MOUNTING
B
8905003-04

ORIGINAL PAGE IS
OF POOR QUALITY

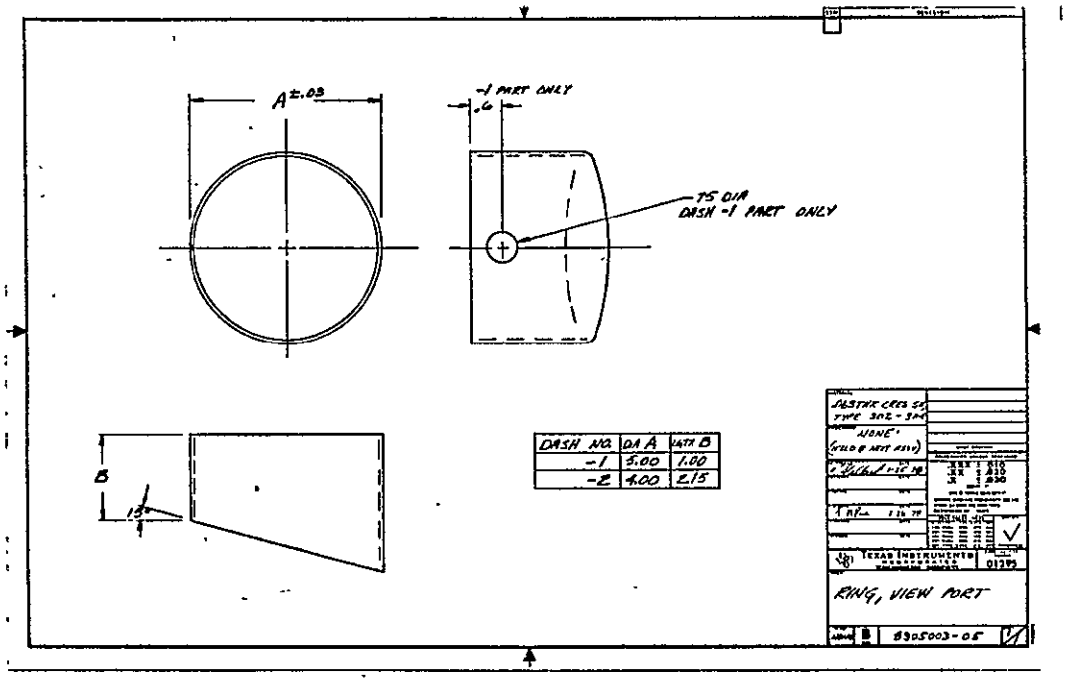

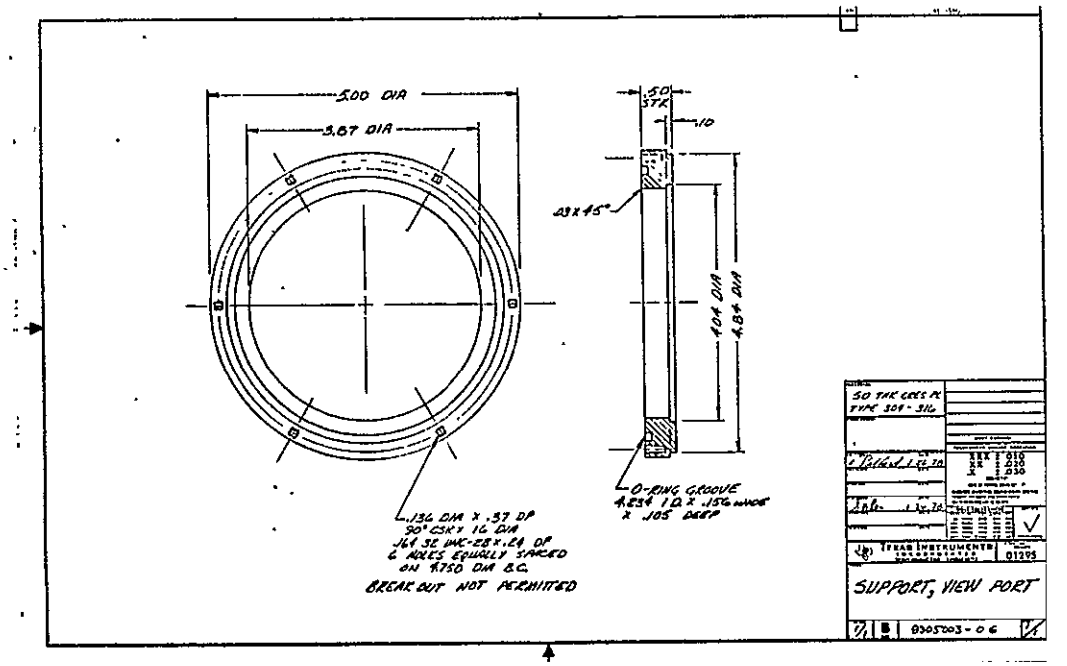

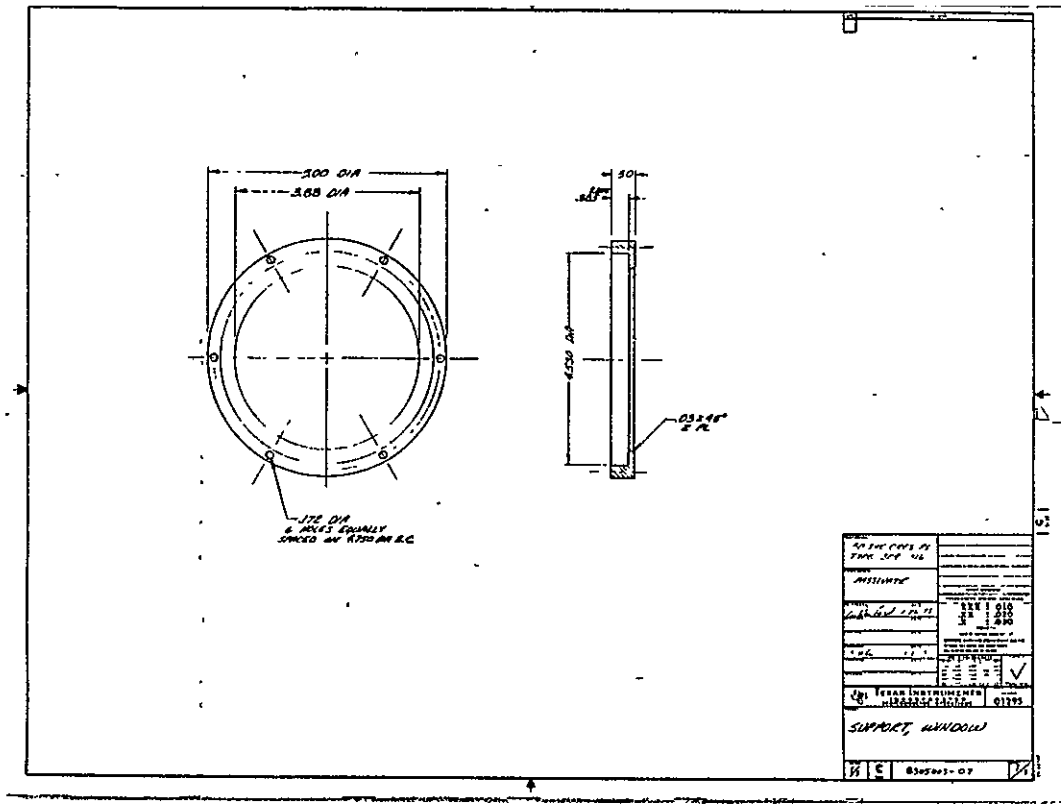
3.00 DIA
3.88 DIA
.50
4.530 DIA
.03 x 45°
2 PL
.172 DIA
6 HOLES EQUALLY
SPACED ON 4.750 DIA B.C.
PASSIVATE
TEXAS INSTRUMENTS
01295
SUPPORT, WINDOW
8305003-07

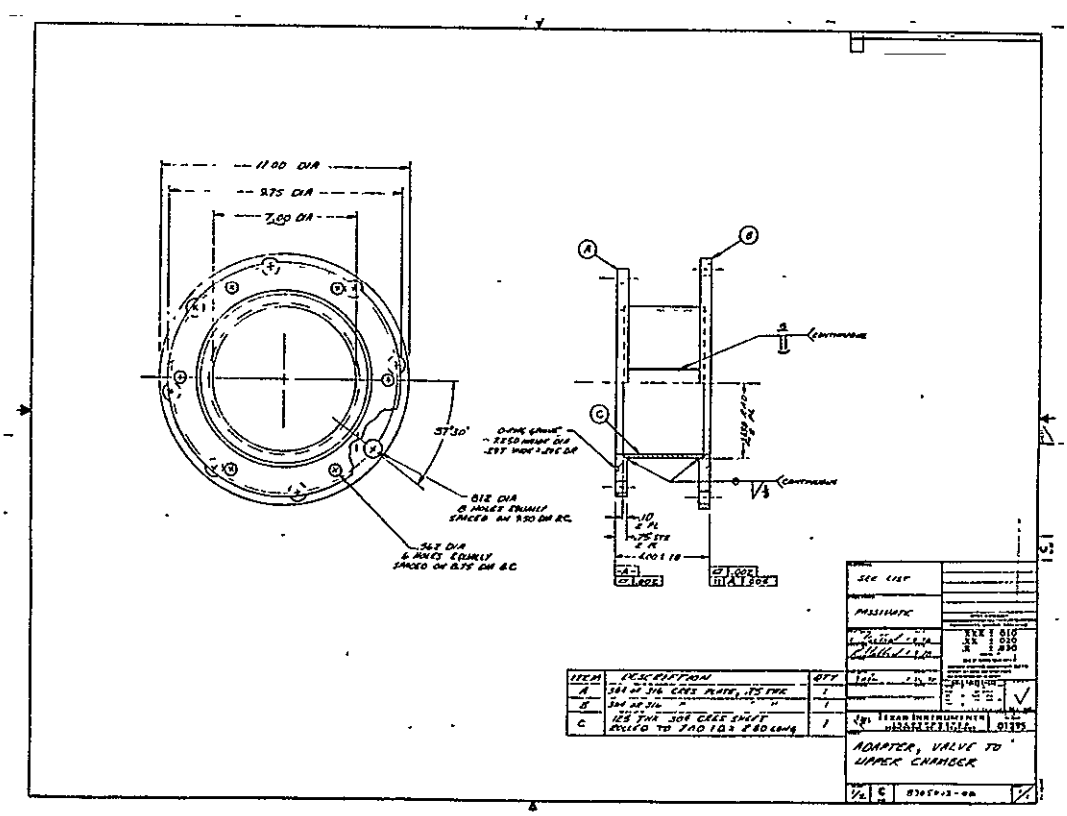
11.00 DIA
9.75 DIA
7.00 DIA
37°30'
.812 DIA
8 HOLES EQUALLY
SPACED ON 9.50 DIA B.C.
.562 DIA
6 HOLES EQUALLY
SPACED ON 8.75 DIA B.C.
CONTINUOUS
CONTINUOUS
SEE LIST
PASSIVATE
ITEM
DESCRIPTION
QTY
A
B
C
1
1
1
TEXAS INSTRUMENTS
01295
ADAPTER, VALVE TO
UPPER CHAMBER
8305003-08

ORIGINAL PAGE IS
OF POOR QUALITY

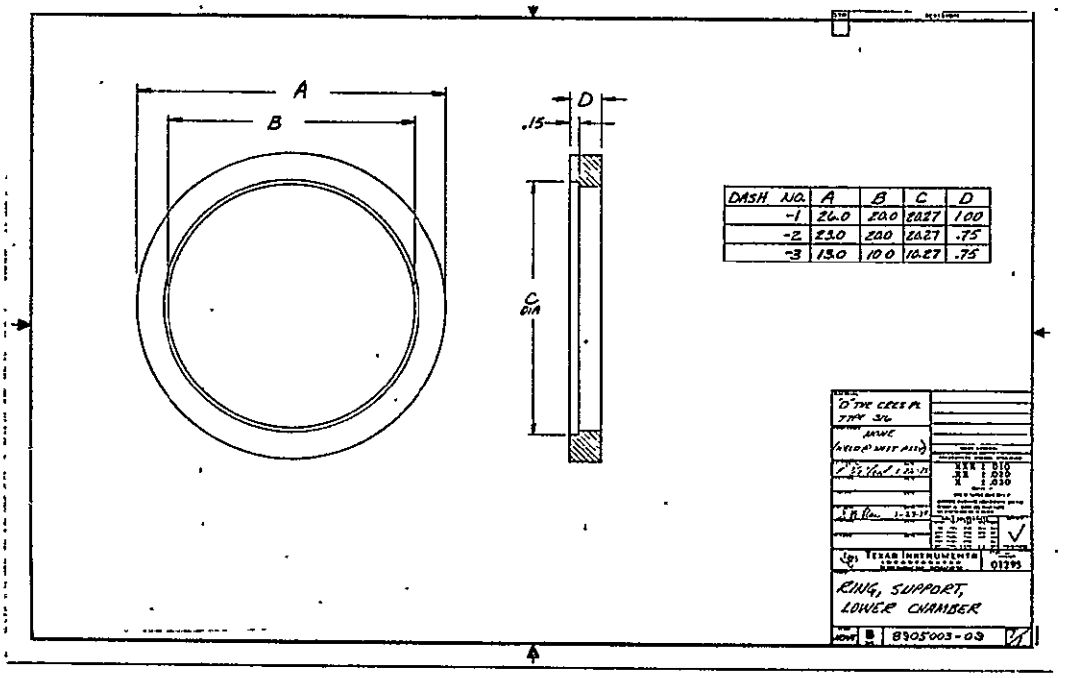

DASH NO.	A	B	C	D
-1	26.0	20.0	20.27	1.00
-2	23.0	20.0	20.27	.75
-3	13.0	10.0	10.27	.75

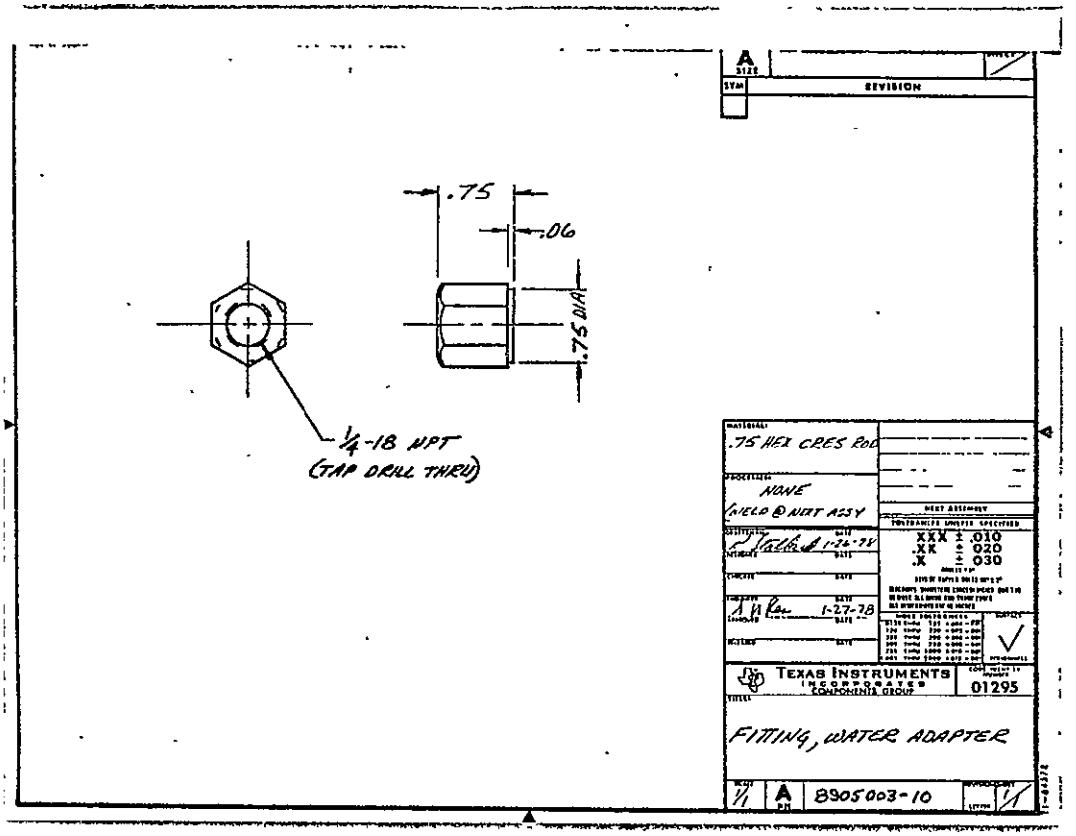

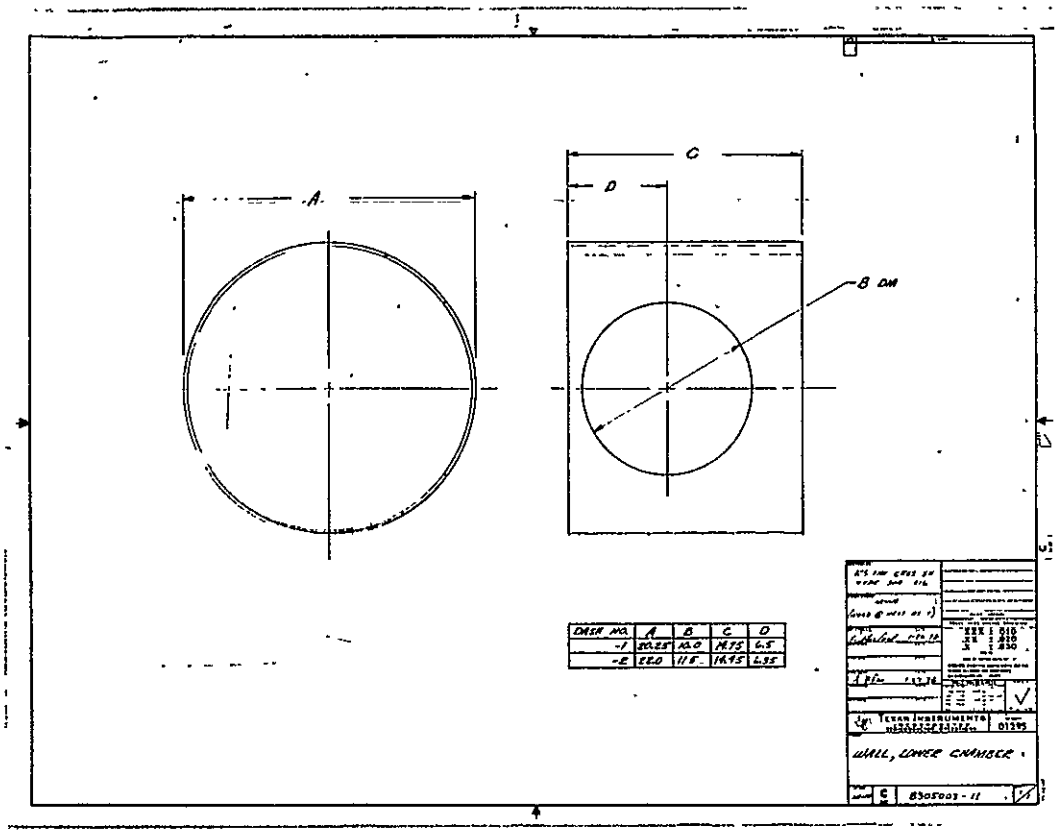
A
C
D
B DIA
DASH NO. | A | B | C | D
-1 | 20.25" | 10.0 | 14.75 | 6.5
-2 | 22.0 | 11.5 | 14.75 | 6.55
TEXAS INSTRUMENTS
01295
WALL, LOWER CHAMBER
C
8905003-11

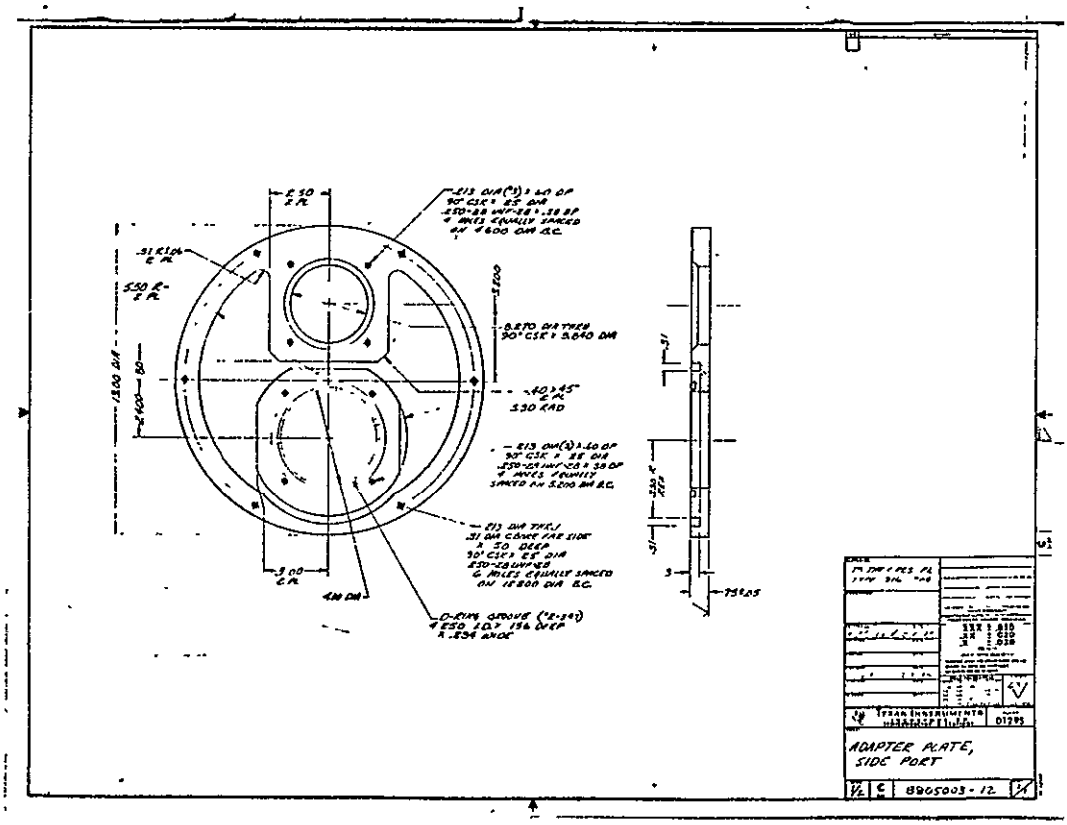
TEXAS INSTRUMENTS
01295
ADAPTER PLATE,
SIDE PORT
C
8905003-12

ORIGINAL PAGE IS
OF POOR QUALITY

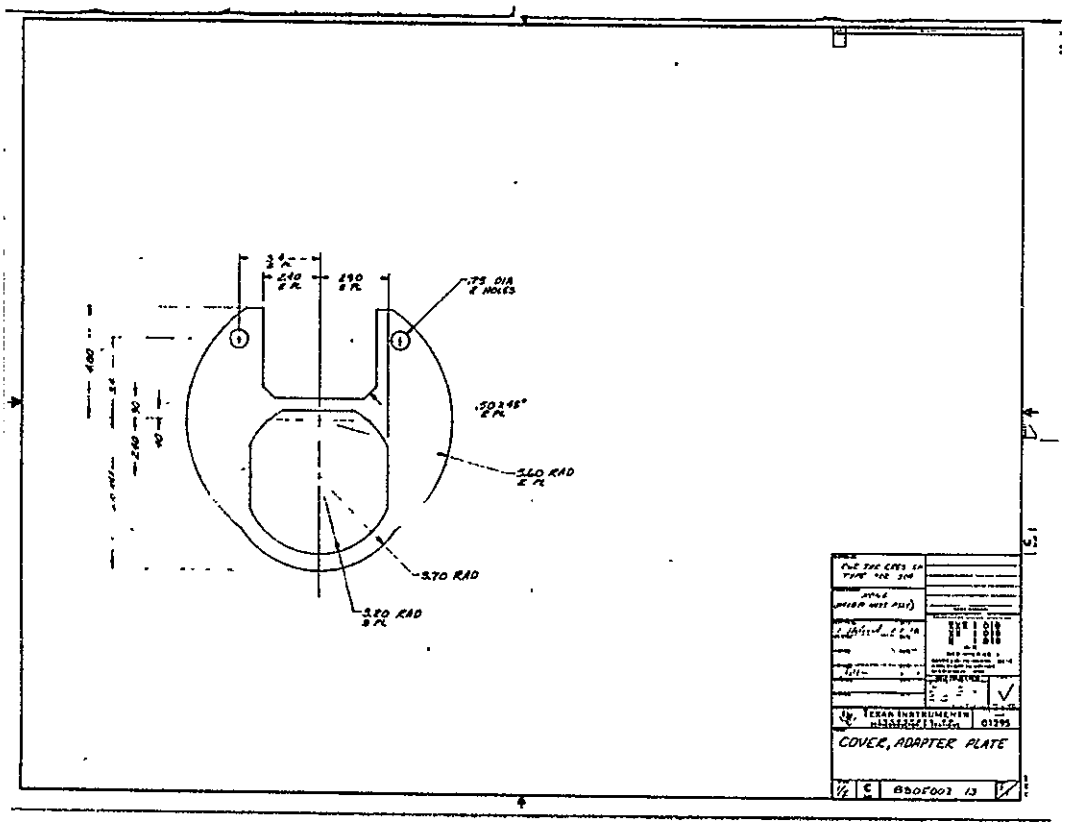

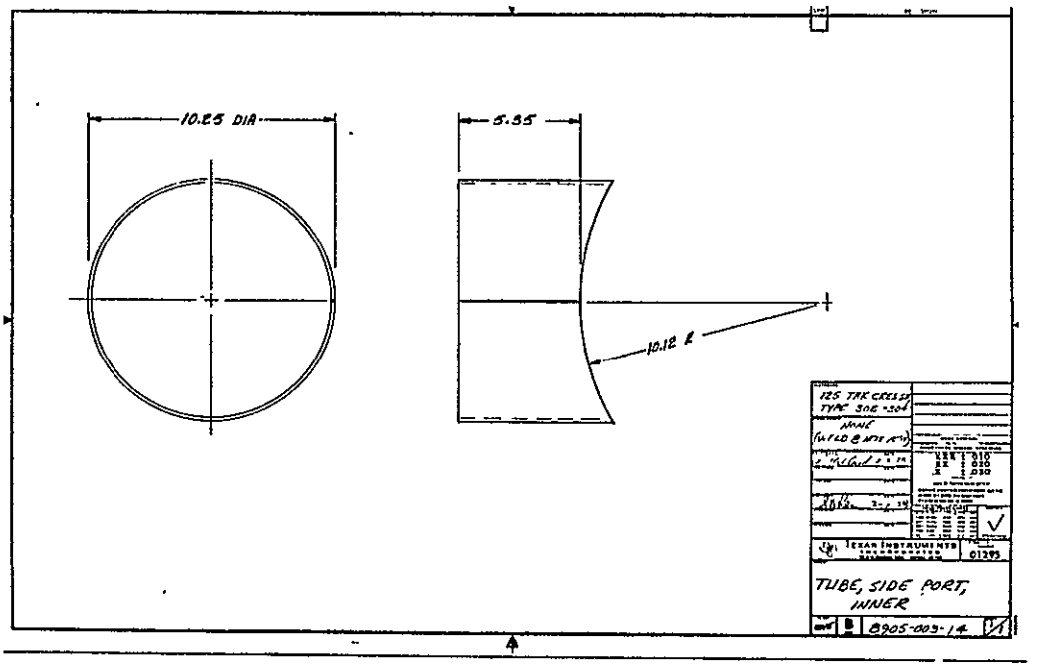

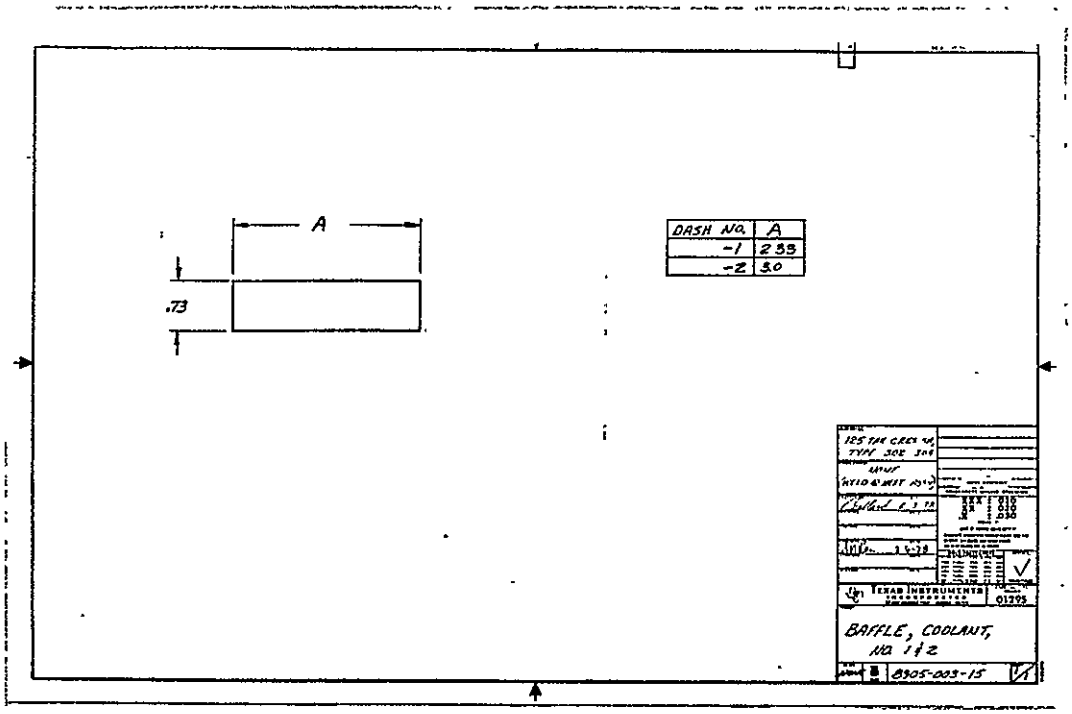
A
.73
DASH NO. | A
-1 | 2.55
-2 | 3.0
TEXAS INSTRUMENTS
01295
BAFFLE, COOLANT, NO 1 & 2
8905-003-15

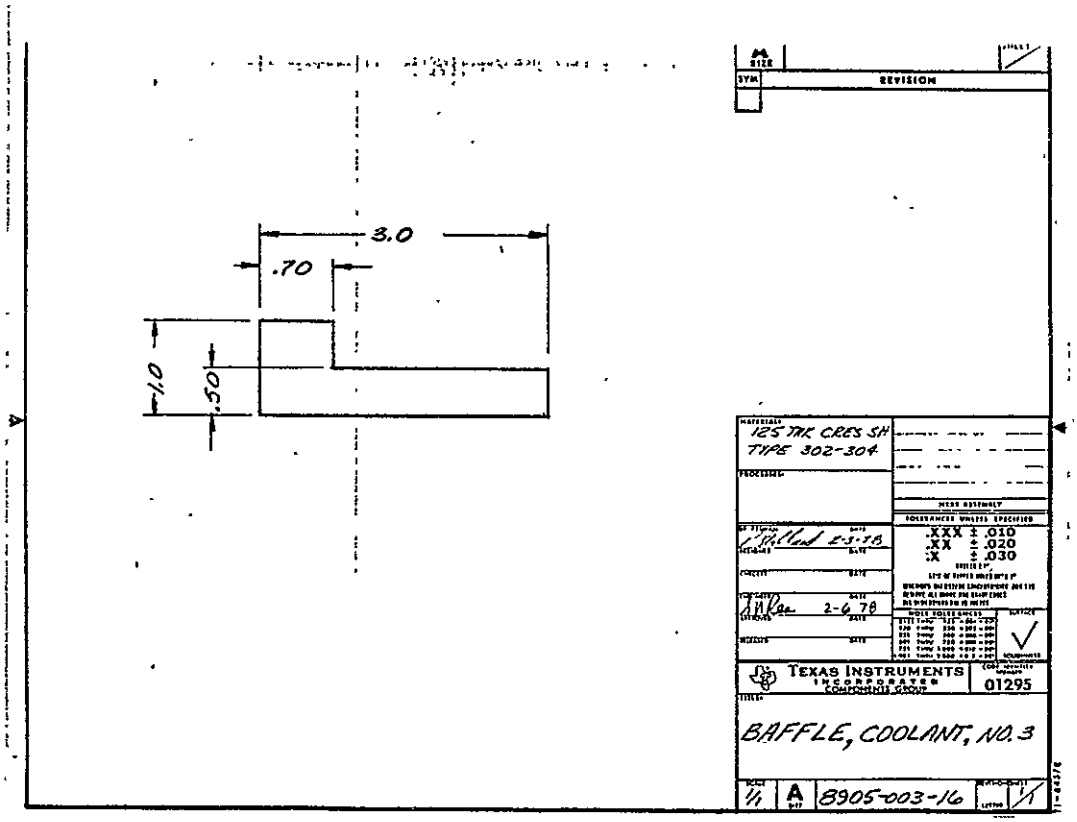
3.0
.70
1.0
.50
REVISION
125 THK CRES SH
TYPE 302-304
.XXX ± .010
.XX ± .020
.X ± .030
TEXAS INSTRUMENTS
INCORPORATED
COMPONENTS GROUP
01295
BAFFLE, COOLANT, NO. 3
8905-003-16

ORIGINAL PAGE IS
OF POOR QUALITY

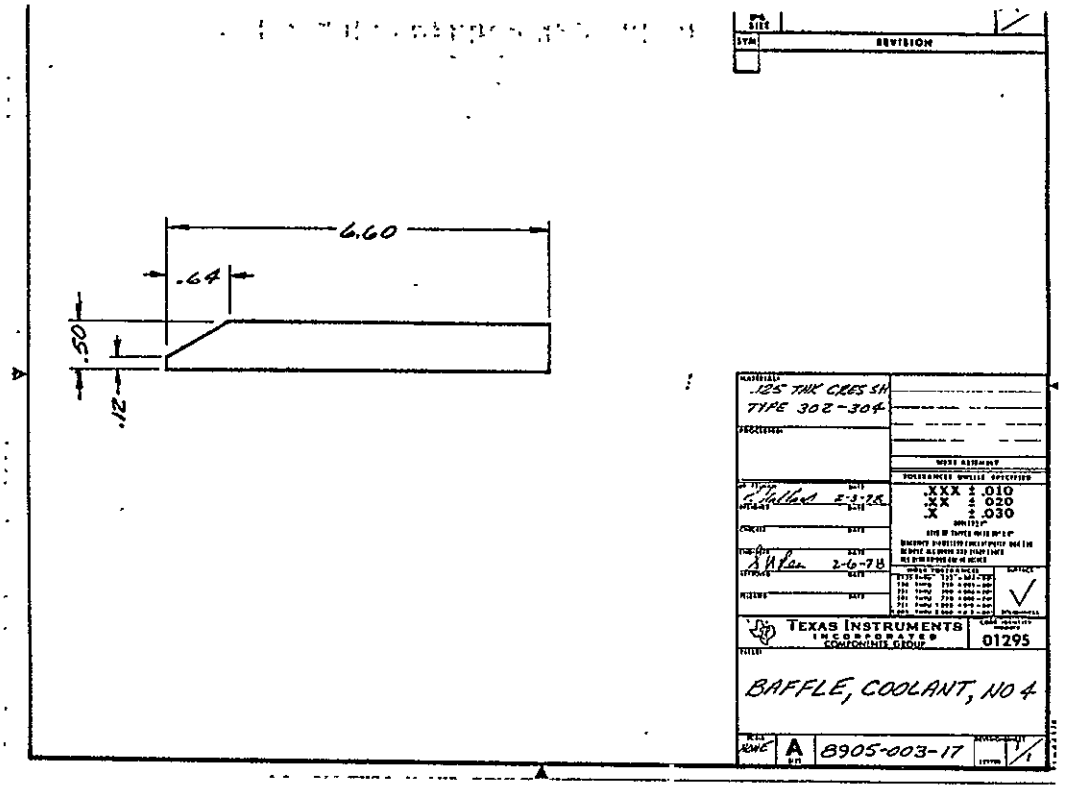

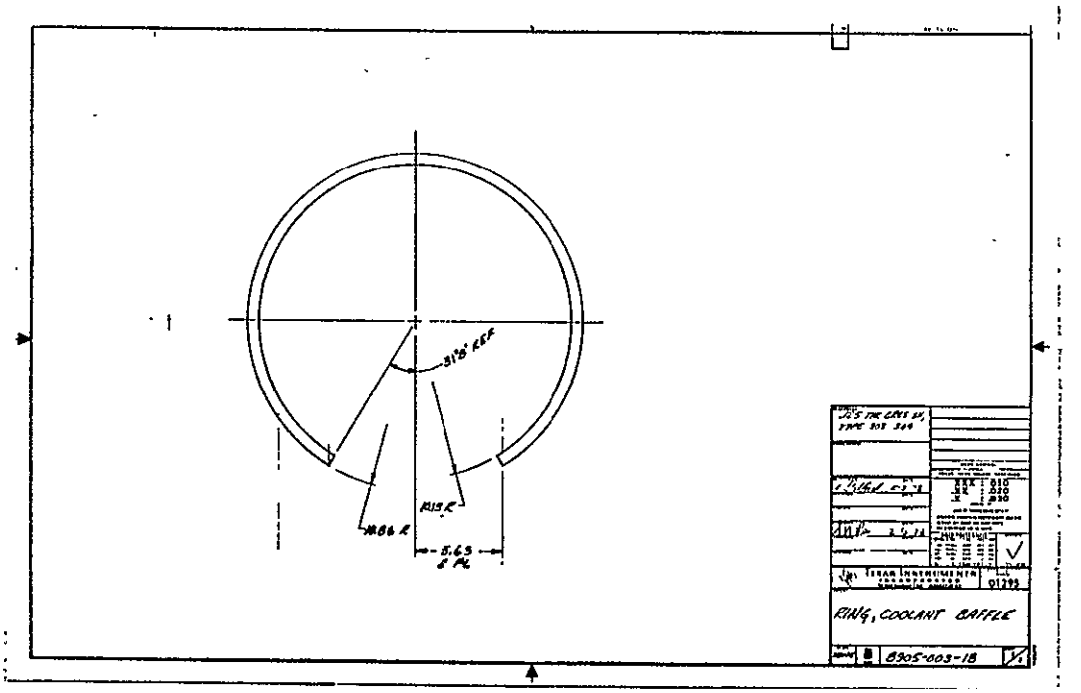

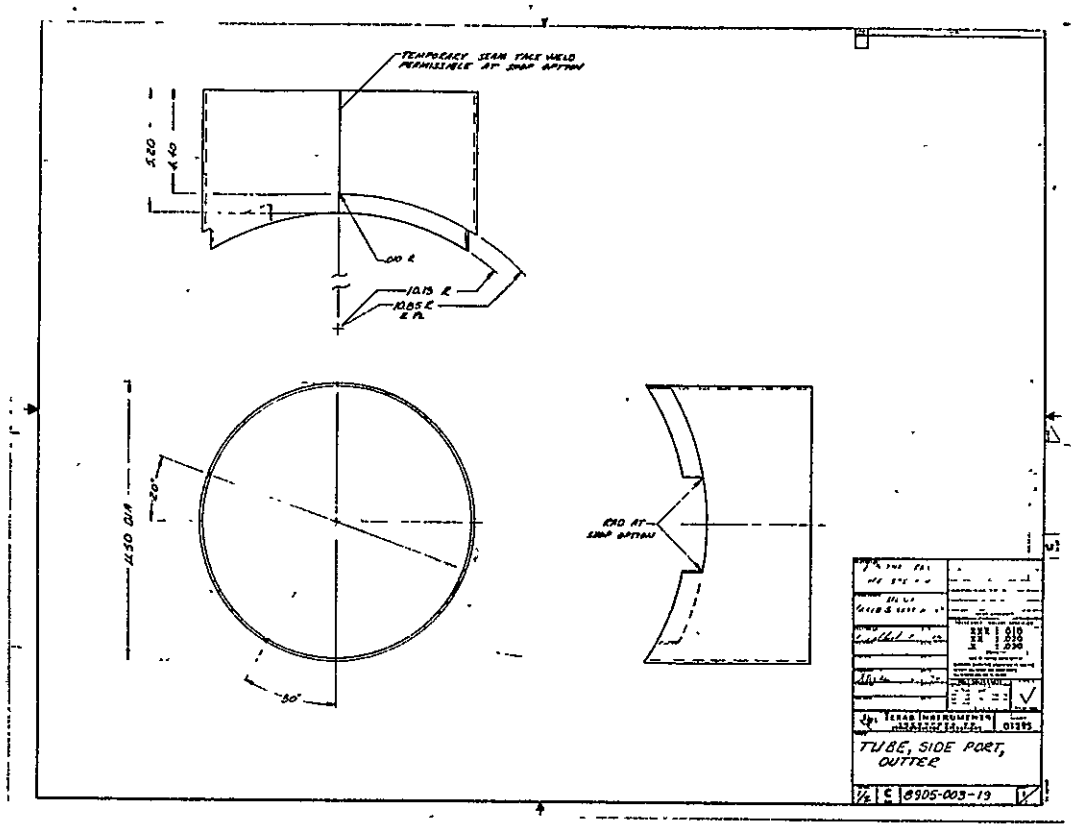
TEMPORARY SEAM TACK WELD PERMISSIBLE AT SHOP OPTION
5.20
4.40
.00 R
10.15 R
10.85 R
2 PL
11.50 DIA
20°
30°
RAD AT SHOP OPTION
TEXAS INSTRUMENTS
01295
TUBE, SIDE PORT, OUTTER
1/2 C 8905-003-19 1/1

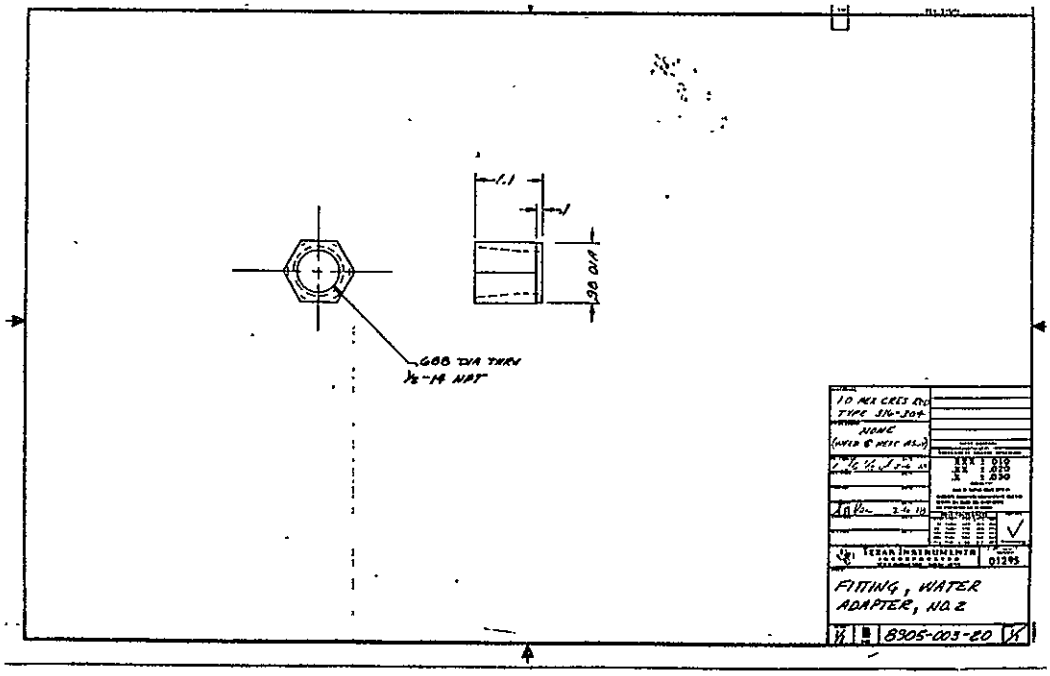
1.1
.1
.98 DIA
.688 DIA THRU
1/2-14 NPT
10 HEX CRES RYD
TYPE 316-304
NONE
(WELD & HEXT ASSY)
TEXAS INSTRUMENTS
01295
FITTING, WATER ADAPTER, NO. 2
1/1 B 8905-003-20 1/1

ORIGINAL PAGE IS
OF POOR QUALITY

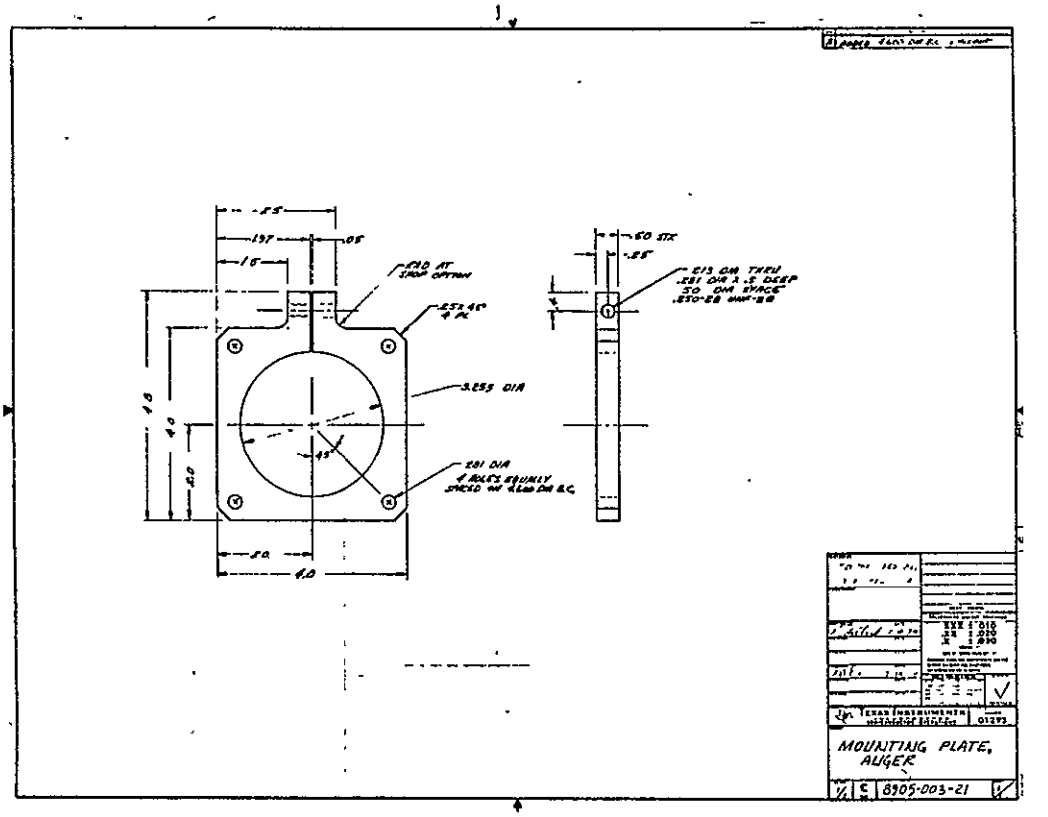

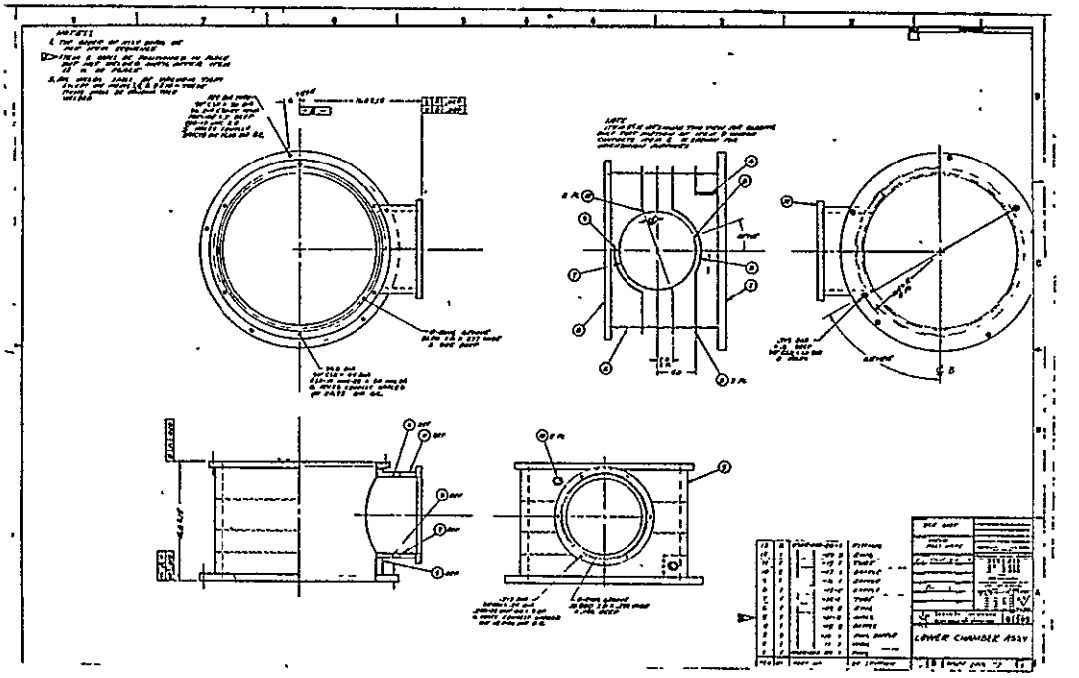

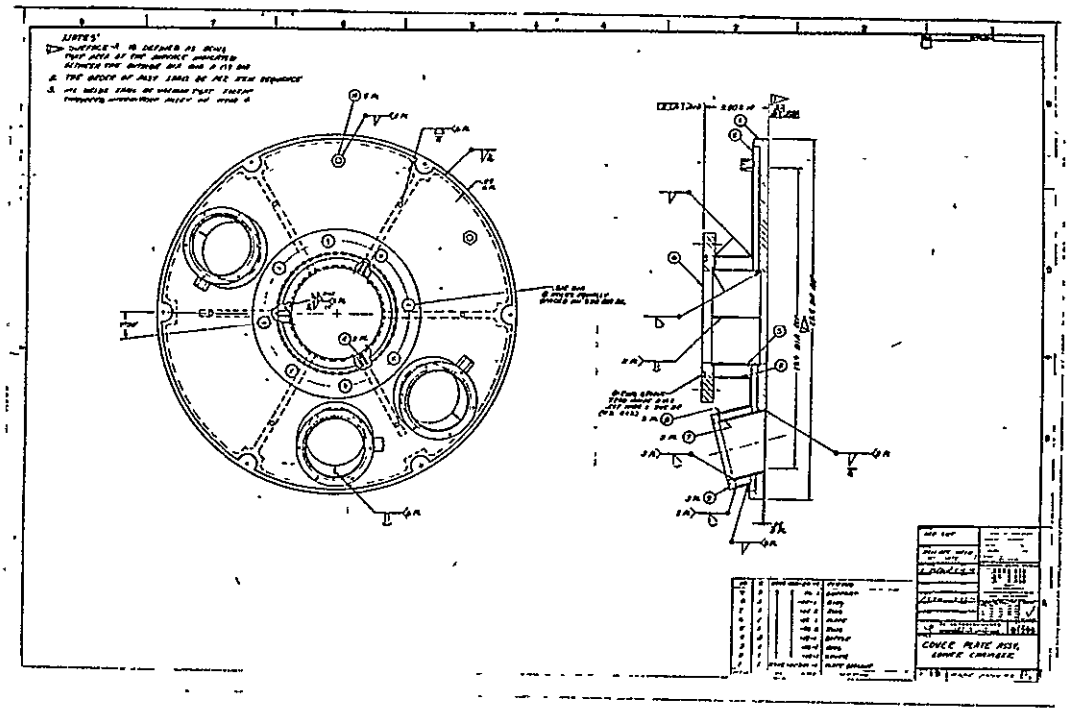
NOTES:
COVER PLATE ASSY.
COVER CHAMBER

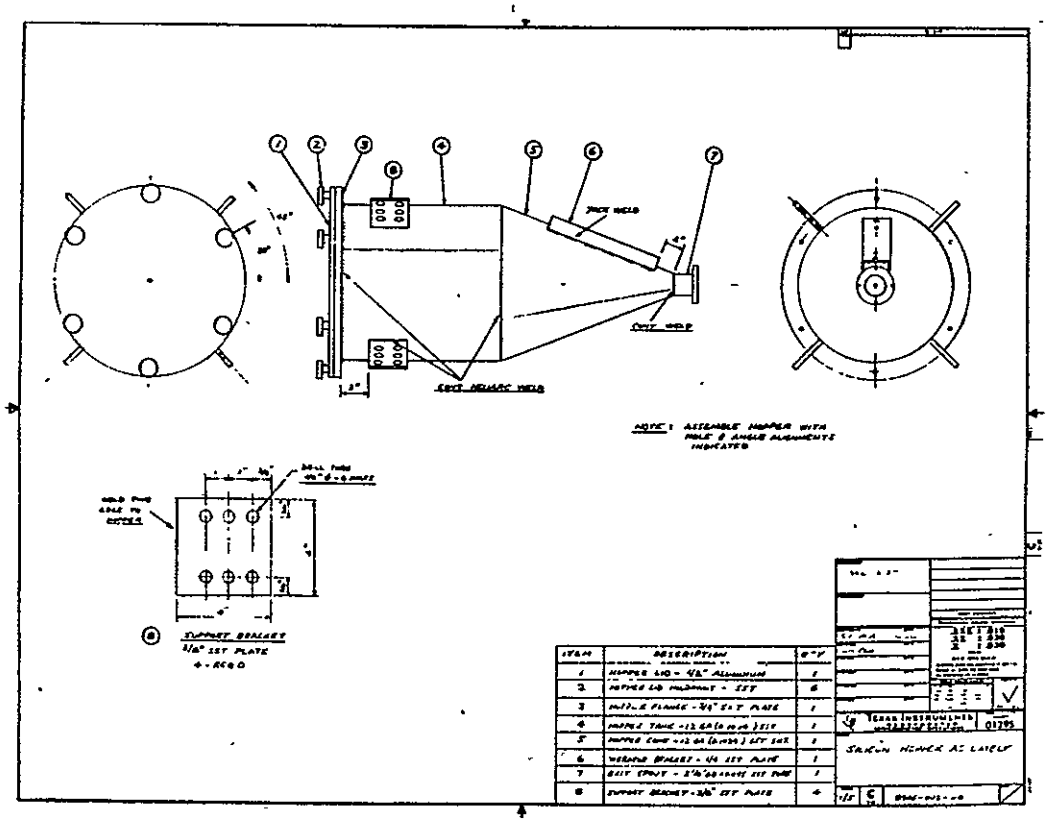
JACK WELD
CONT WELD
CONT NEUARC WELD
NOTE: ASSEMBLE HOPPER WITH HOLE & ANGLE ALIGNMENTS INDICATED
SUPPORT BRACKET
3/8" SST PLATE
4 - REQ'D
ITEM
DESCRIPTION
Q'TY
1
2
3
4
5
6
7
8
TEXAS INSTRUMENTS
01795
SILICON HOPPER AS LATELY

ORIGINAL PAGE IS
OF POOR QUALITY

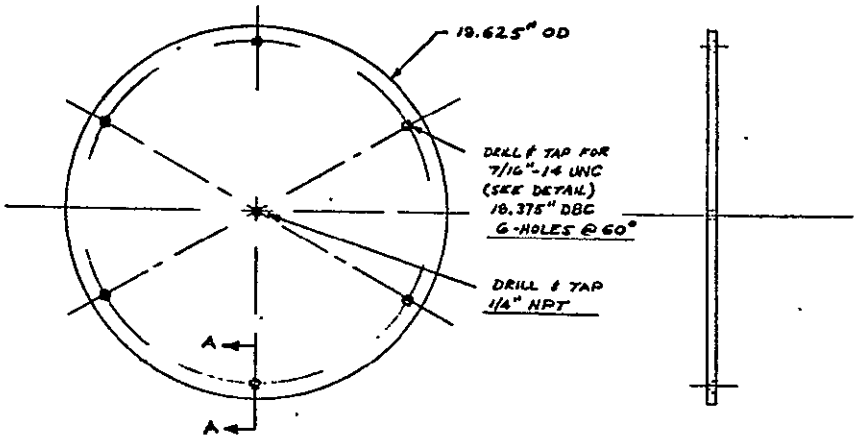

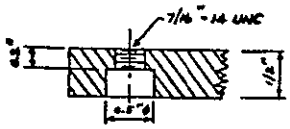

DETAIL A-A

(1)

1-REQ'D.
HOPPER LID
MAT'L: 1/2" AL PLATE
8305-002-01
S.N. REA - XT. 2334
12/21/77

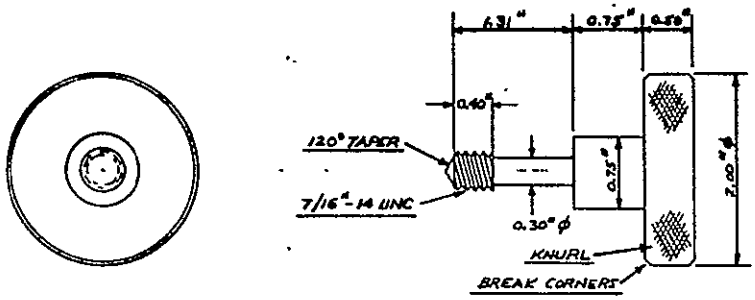

ADVANCED CZ PULLER
HOPPER LID HOLDOWNS
MAT'L.: 316 S.S.
NO REQ'D: 6

(2)

8305-002-02
S.N. REA
11-28-77
XT. 2334

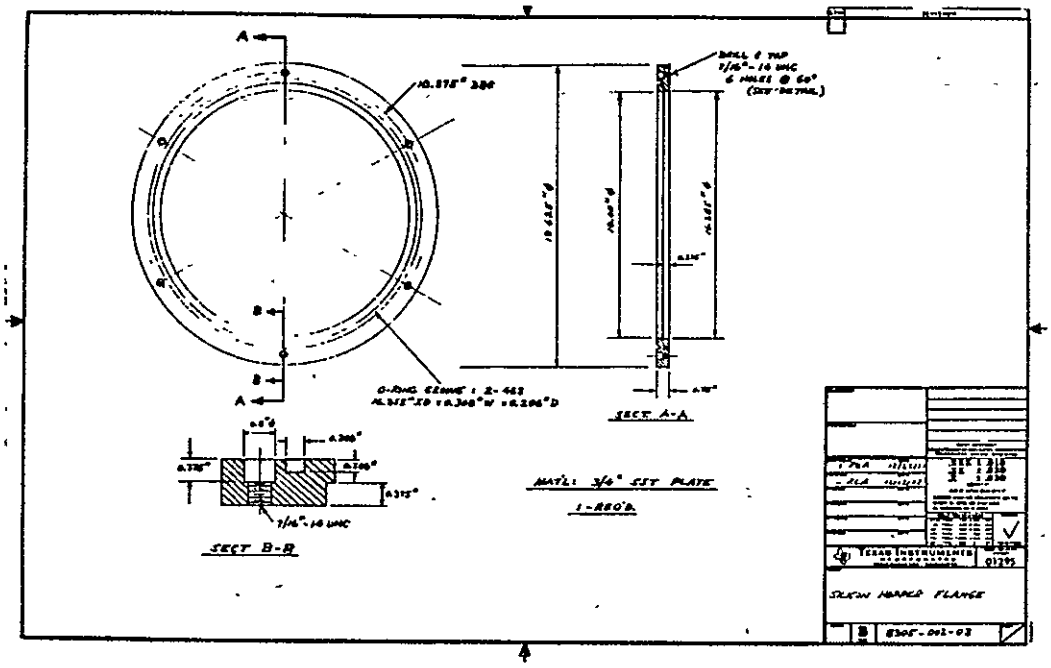

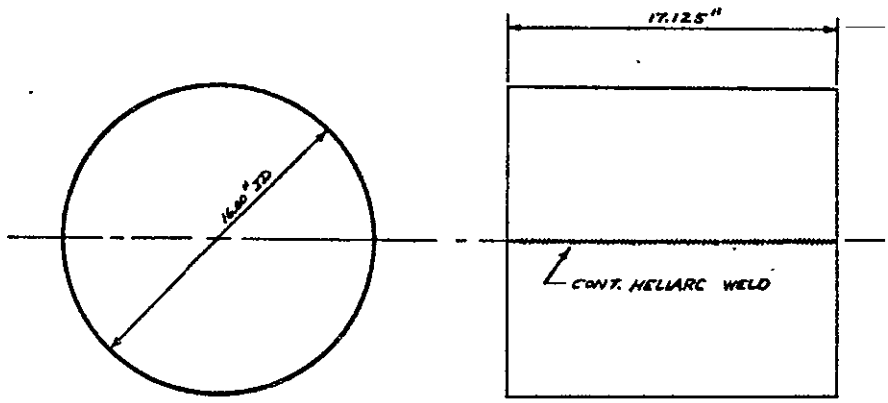

(4)

HOPPER TANK

MAT'L: 12 GA SST SHEET

1-REQ'D.

8905-002-04

S.N. RCA-XT. 2334

12/22/77

ORIGINAL PAGE IS
OF POOR QUALITY

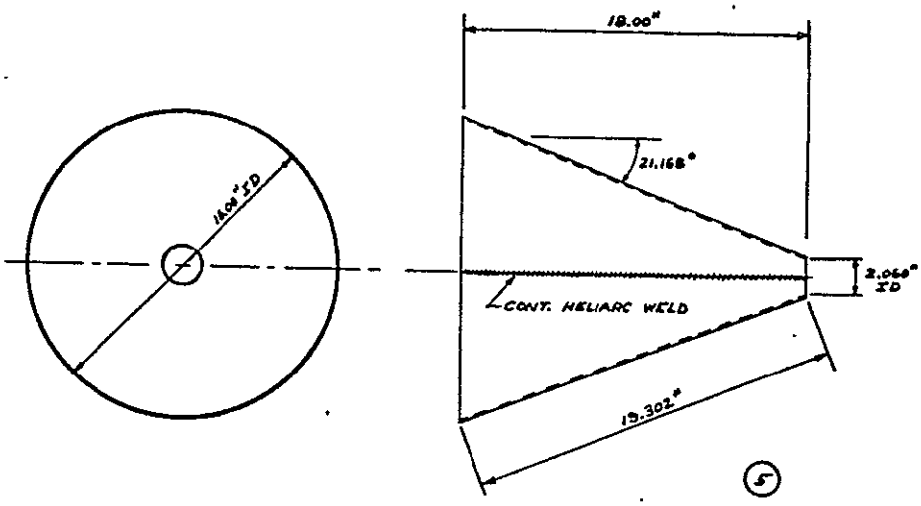

(5)

HOPPER CONE
MAT'L: 12 GA SST SHEET
1 - REQ'D
8905-002-05
S.N. RCA - XT. 2334
12/22/77

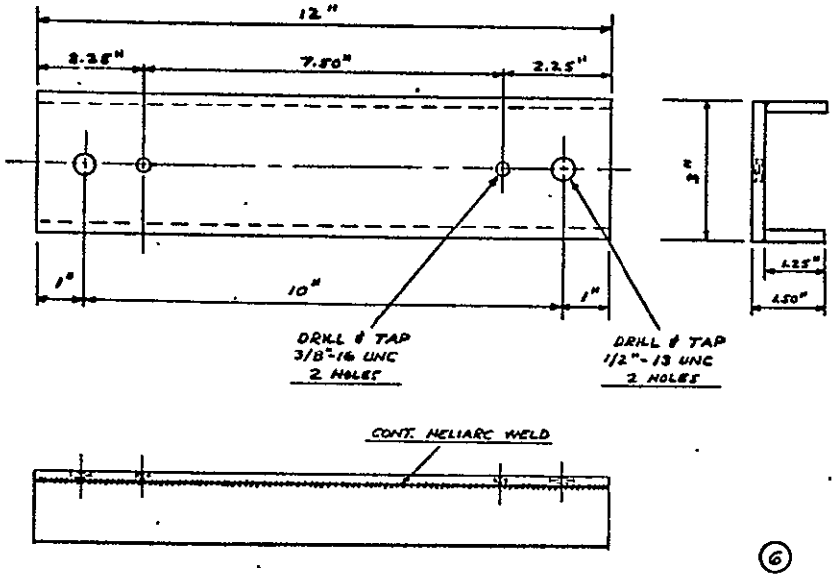

(6)

VIBRATOR BRACKET
MAT'L: 1/4" SST PLATE
1 - REQ'D.
8905-002-06
S.N. RCA - XT. 2334
12/21/77

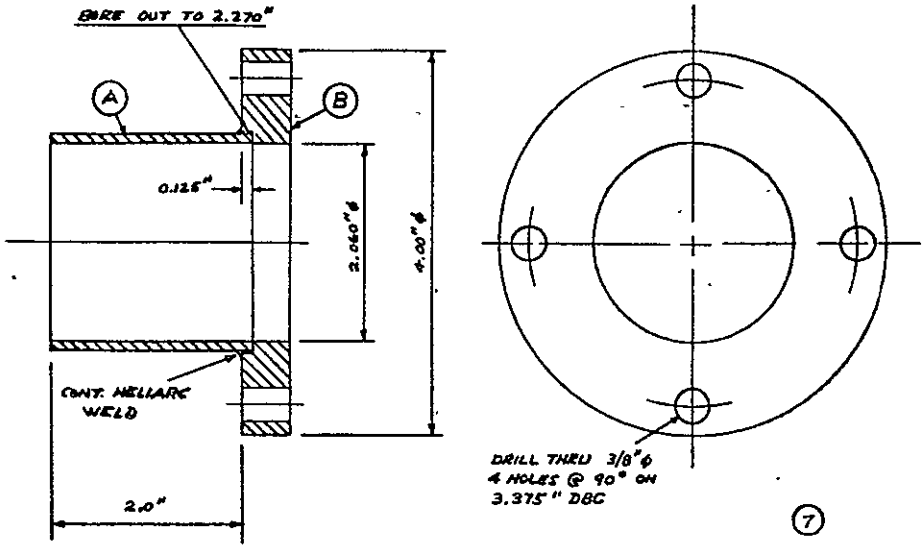

(7)

HOPPER EXIT SPOUT

1-REQ'D

8205-002-07

S.N. REA - XT. 2334
12/21/77

(A) 2 1/4" OD x 0.095 WALL SST TUBING

(B) 1/2" SST PLATE

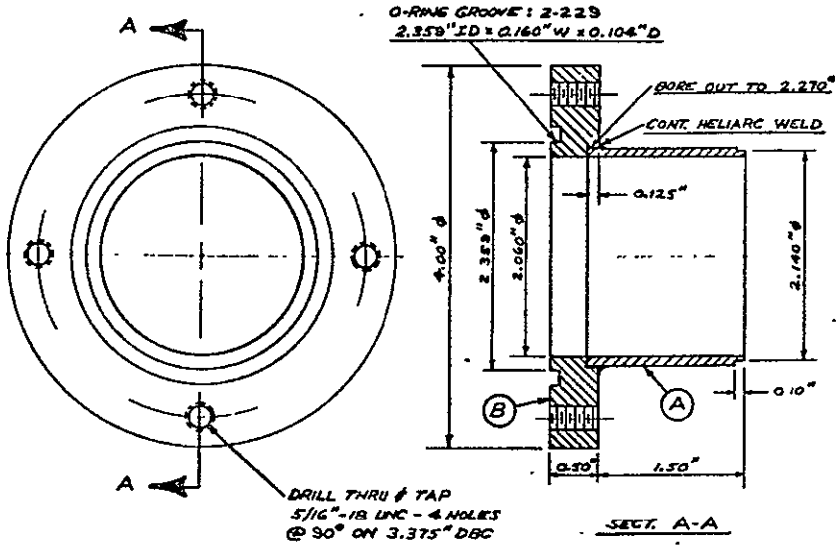

SECT. A-A

(A) 2 1/4" OD x 0.095" WALL SST TUBING

(B) NOMINAL 1/2" SST PLATE

ADVANCED CZ PULLER

SI HOPPER TRANSITION

NO. REQ'D: 2

S.N. REA
XT. 2334
12-6-77

APPENDIX B

ECONOMIC MODEL BACKUP

The attached pages detail pertinent assumptions and costs associated with the continuous process under development. These data were utilized in the IPEG model presented in this report.

CONTINUOUS CZOCHRALSKI ECONOMIC MODEL

CRYSTAL GROWTH EQUIPMENT COST

1.	Basic Furnace	$100,000
2.	Auxiliary Melter/Power Supply	3,000
3.	Silicon Hopper/Feed System	4,000
4.	Melt Level Control	5,000
5.	Vacuum Valve	4,000
6.	Contingency	5,000
	Total	$121,000

CONTINUOUS CZOCHRALSKI ECONOMIC MODEL

CYCLE TIME

	Event	Time	
1.	Cleanup	0.5 h	
2.	Load and Melt (12 kg)	1.5	
3.	Seed and Top	1.0	
4.	Growth (14.34 kg)	7.8	78 cm
5.	Taper (10.6 kg)	1.0	
6.	Unload	1.0	
7.	Repeat - 6 Crystals	64.8	468 cm
8.	Cooldown and Unload	1.0	
	Totals:	78.6 h	546 cm
	Polysilicon Charged:	104.6 kg	
	Power Consumption:	3800 kW-h	

CONTINUOUS CZOCHRALSKI ECONOMIC MODEL

CRYSTAL GROWTH OPERATING SUPPLIES COSTS

	Item	Cost/Run
1.	Crucible Shaft	$ 18.00
2.	Graphite Crucible	32.00
3.	Quartz Liner	100.00
4.	Graphite Shaft Parts	9.00
5.	Graphite Heater	16.67
6.	Misc. Graphite Heater Parts	3.75
7.	Graphite Heat Shield	20.00
8.	Graphite Felt Insulation	3.00
9.	Outer Stainless Heat Shield	4.00
10.	Misc. Heat Shield Parts	6.00
11.	Shaft Seals	1.00
12.	Auxiliary Heater	12.50
13.	Auxiliary Crucible	10.00
14.	Crystal Seeds	35.00
15.	Vacuum Pump Filter	9.00
16.	Vacuum Pump Oil	3.00
17.	Argon	233.00
	Total	$515.92/run