General Disclaimer

One or more of the Following Statements may affect this Document

- This document has been reproduced from the best copy furnished by the organizational source. It is being released in the interest of making available as much information as possible.

- This document may contain data, which exceeds the sheet parameters. It was furnished in this condition by the organizational source and is the best copy available.

- This document may contain tone-on-tone or color graphs, charts and/or pictures, which have been reproduced in black and white.

- This document is paginated as submitted by the original source.

- Portions of this document are not fully legible due to the historical nature of some of the material. However, it is the best reproduction available from the original submission.

Produced by the NASA Center for Aerospace Information (CASI)

DECEMBER 1978

MDC G7555

CR 151878

(NASA-CR-151878) ORBITAL SERVICE MODULE SYSTEMS ANALYSIS STUDY DOCUMENTATION. VOLUME 2: TECHNICAL REPORT Final Report (McDonnell-Douglas Astronautics Co.) 179 p HC A09/MF A01 CSCL 22B G3/16

N79-16059

Unclas 43390

ORBITAL SERVICE MODULE SYSTEMS ANALYSIS STUDY DOCUMENTATION

VOLUME 2
Technical Report

FEB 1979
RECEIVED
NASA STI FACILITY

MCDONNELL DOUGLAS ASTRONAUTICS COMPANY

MCDONNELL DOUGLAS CORPORATION

PREFACE

The purpose of the Orbital Service Module Systems Analysis Study has been to investigate potentially feasible system concepts for providing additional power, thermal control, and attitude control to the baseline Orbiter in order to support a greater variety of space missions and to extend the Orbiter's ability to remain in orbit. The results of these analyses have led to an incremental growth plan that offers the flexibility of adding capability as, and when, it is needed in order to satisfy emerging user requirements.

The study consists of three documents:

Volume 1	Executive Summary
Volume 2	Technical Report
Volume 3	Program Plan

Questions regarding this study activity should be directed to:

Jerry Craig/Code EA4
Manager, Orbital Service Module Systems Analysis Study
National Aeronautics and Space Administration
Lyndon B. Johnson Space Center
Houston, Texas 77058, (713) 483-2703

C. J. DaRos (or D. C. Wensley)
Study Manager, Orbital Service Module Systems Analysis Study
McDonnell Douglas Astronautics Company-Huntington Beach
Huntington Beach, California 92647, (714) 896-1886

PRECEDING PAGE BLANK NOT FILMED

CONTENTS

Section 1	INTRODUCTION		1
	1.1	Projected User Needs	2
	1.2	Payload Extension Package (PEP)	3
	1.3	Power Module Concepts	5
Section 2	MISSION ANALYSIS AND REQUIREMENTS DEFINITION		11
	2.1	PEP/Power Module Requirements Analysis	11
	2.1.1	PEP Requirements	12
	2.1.2	Power Module Requirements	16
	2.2	PEP Mission Analysis	21
	2.2.1	PEP System Performance	23
	2.2.2	PEP Mission Application	25
	2.3	Power Module Mission Analysis	28
	2.3.1	System Performance	29
	2.3.2	Orbit Selection	32
	2.3.3	Reboost System Analysis	35
Section 3	OSM CONCEPTS		41
	3.1	PEP Design Definition	42
	3.1.1	Background of PEP Design	42
	3.1.2	PEP Design Drivers and Interfaces	43
	3.1.3	PEP System Features	48
	3.1.4	Subsystem Description, Major Trade-offs and Analysis	52
	3.1.5	PEP Mission Integration and Operations	71
	3.2	OSM Power Module Design Concept	76
	3.2.1	Mission Requirements	76
	3.2.2	Configuration Design Variables	77
	3.2.3	Orientations and Control System Sizing	79
	3.2.4	OSM Power Module Concept Definition	88
	3.2.5	Subsystem Definition for the Full-Capability Reference Configuration and a Limited Configuration	100

PRECEDING PAGE BLANK NOT FILMED

	3.2.6	OSM Power Module Operations	132
3.3	Alternate Configurations		137
	3.3.1	Intermediate Power Module	138
	3.3.2	Limited Capability Power Module	141
	3.3.3	Alternate Full-Capability Configuration	141
3.4	Growth Options		146
	3.4.1	Siamese Twins	149
	3.4.2	On-Orbit Addition of Subsystem	150
	3.4.3	Ground Based Growth	151
	3.4.4	Comparison of Growth Options	153
Section 4	PROGRAMMATICS		155
4.1	PEP		156
	4.1.1	PEP Costs	156
	4.1.2	PEP Schedule and Funding	157
4.2	Power Module		159
	4.2.1	Power Module Costs	159
	4.2.2	Power Module Schedule and Funding	160
4.3	Power Module Variations and Cost Sensitivities		161
	4.3.1	Electrical Power Subsystem	162
	4.3.2	User Service Options	163
	4.3.3	Power Module Variations	165
4.4	OSM Program Planning Baseline		166

FIGURES

1-1	Schedule and Milestones	1
1-2	PEP Elements	3
1-3	PEP Performance Benefits	4
1-4	Full-Capability Reference Concept	6
1-5	Power Module Variations	7
1-6	PEP Conclusions	9
1-7	OSM Power Module Conclusions	10
2-1	Requirements Analysis Methodology	11
2-2	Power Requirements—STS Mission Model (Spacelab Missions)	13
2-3	Mission Duration—STS Mission Model (Spacelab Missions)	14
2-4	Orbit Inclination/Altitude Requirements STS 10-77 Model-SL	15
2-5	Orientation Requirements	16
2-6	User Power and Duration Requirements	18
2-7	Multiple Viewing Requirements	18
2-8	Pointing Requirements and Potential Solutions	19
2-9	User Power Stack Requirements	21
2-10	Orbit Inclination/Altitude Candidate OSM Missions (10-77 Model)	22
2-11	PEP Performance Benefits 55° x 250 nmi	23
2-12	PEP Mission Capability, 55° x 250 nmi (4 Tank Sets)	24
2-13	Payload Delivery Capability	25

2-14	PEP Performance Capability	27
2-15	PEP Co-Manifest Capability Flights 7 Through 23	28
2-16	Spacelab 2 Power-Time Profile Using PEP	29
2-17	Power Capability	30
2-18	Array System Power Output	31
2-19	Intermittent Power Capability	32
2-20	Orbit Inclination Selection	33
2-21	Orbit Altitude Selection	34
2-22	Power Module Reboost Concepts	35
2-23	Orbiter Reboost	36
2-24	Added Reboost System	37
2-25	Ion Propulsion Capability	38
3-1	Orbital Service Module Program	41
3-2	Power Extension Package (PEP) Design Concept	44
3-3	Power Extension Package (PEP)	45
3-4	Load Sharing	46
3-5	PEP Interface	47
3-6	PEP Utilizes Existing SEP Technology Base	49
3-7	PEP System Configuration	49
3-8	Deployment Sequence	50
3-9	PEP Electrical Power System	53
3-10	Power Distribution System with PEP (Daytime)	54
3-11	PEP and Orbiter Fuel Cell Voltage Regulation/ Load Shaking	56
3-12	PEP Installation	59
3-13	Deployed PEP Coilable Mast	59
3-14	Proposed PEP Powerbus Routing on SRMS	60

3-15	PEP Solar Array Beam Loading Factors (RCS Primary Thrustors)	62
3-16	Array Positioning and Control Equipment	64
3-17	PEP Solar Array Control Alternatives	65
3-18	Heat Rejection Requirement Fuel Cell Powered Orbiter and PEP	68
3-19	PEP Thermal Control Interfaces	69
3-20	Typical PEP Heat Rejection Performance	70
3-21	PEP Operations	72
3-22	PEP Initial Launch Processing Timeline	73
3-23	PEP Turnaround Timeline	74
3-24	Configuration Design Variables	78
3-25	Array Axis Perpendicular to Local Vertical	80
3-26	Combined IOP and Solar Inertial	81
3-27	Gravity Gradient Moments	83
3-28	OSM-Power Module Momentum Containment Concept	83
3-29	Angular Momentum History (Without Bias Trim)	84
3-30	CMG Desaturation Techniques	85
3-31	Full-Capability Major Configuration Alternates	87
3-32	OSM Concept Alternatives	89
3-33	OSM Power Module - Alternate Concepts	91
3-34	Effect of Configuration Geometry on Control Parameters	92
3-35	Field of View Effects	94
3-36	Sensor Field of View - OSM Concept 1	95
3-37	Field of View Effects	96
3-38	Full-Capability Reference Concept	97
3-39	OSM - Full-Capability Concept Core Body	98

3-40	Limited Capability Concept	100
3-41	Modular Gimbal Design Concept	104
3-42	Rotary Fluid Coupling Operating Position	105
3-43	Rotary Fluid Coupling Positioned for Seal Replacement	105
3-44	Orbiter Stowage - Full-Capability Concept	108
3-45	Power Module Deployment	109
3-46	OSM Electrical Power System Block Diagram (Full-Capability System)	110
3-47	OSM/Orbiter/Free Flyer Power Distribution Arrangement	111
3-48	OSM Electrical Power System Block Diagram (Limited System)	115
3-49	Full-Capability OSM Cooling Loads	117
3-50	OSM Thermal Control Loop Arrangement Performance for 113-V Electrical Output (Full Capability)	120
3-51	Limited OSM Cooling Loads	121
3-52	OSM Thermal Control Loop Arrangement Performance for 113-V Electrical Output (Limited Capability)	123
3-53	Pointing Requirements and Potential Solutions	125
3-54	OSM-Power Module Stabilization and Control System Elements	125
3-55	All-Attitude Power Module Stabilization System	126
3-56	Communications and Data Handling	130
3-57	Avionics System Block Diagram	131
3-58	High-Gain Antenna System	133
3-59	OSM Power Module Operations	133
3-60	OSM Power Module Processing Timelines	134
3-61	Orbiter OSM Power Module Equipment Turnaround	135

3-62	OSM Concepts and Derivatives	138
3-63	Intermediate Power Module Concepts	139
3-64	Limited Capability Concept	142
3-65	Full-Capability OSM - With Multiple Simultaneous Payload Orientation	143
3-66	Gimbal Locations	144
3-67	Modular Gimbal Design Concept	145
3-68	Power Module Growth Concepts	149
3-69	Growth Concept	152
4-1	PEP Cost (Millions of 1978 Dollars)	157
4-2	PEP Schedule and Funding	158
4-3	Reference Design Power Module	160
4-4	Power Module Schedule and Funding	161
4-5	Electrical Power Subsystem Cost Sensitivity	162
4-6	Power Module User Services Hardware Cost Sensitivity	164
4-7	Power Module Variations	165
4-8	OSM Program Planning Baseline	167

TABLES

1-1	Mission-Derived Design Requirements	2
2-1	Mission-Derived Design Requirements	17
2-2	User Requirement Summary, 1984-1991	20
2-3	Mission-Derived Design Requirements	22
2-4	STS Flight Assignment Baseline, 10-77	26
2-5	Reboost System Comparison	39
3-1	PEP Baseline Characteristics	45
3-2	PEP Design Drivers	46
3-3	PEP System Features	48
3-4	PEP Stabilization and Control Utilizing Orbiter RCS	51
3-5	RMS Power Cable Wiring Trades	63
3-6	PEP Avionics Orbiter Interface Options Trade Data	67
3-7	Thirteen Items of GSE Identified (One Each)	76
3-8	Mission-Derived Design Requirements	77
3-9	Control Actuation System Sizing	88
3-10	Full-Capability Reference OSM Power Module	99
3-11	Power Delivered to Payload Ports	110
3-12	Power System Weight	112
3-13	OSM System/Power Conditioning Options	114
3-14	Power Delivered to Payload Ports (kW)	116
3-15	Power System Weight	116

PRECEDING PAGE BLANK NOT FILMED

3-16	OSM-Power Module Avionics, Guidance and Control Requirements	124
3-17	OSM Control Actuation System Sizing Full Capability Versus Limited Concept (IOP/Solar Inertial Orientation)	127
3-18	Control Actuator Sizing Full-Capability Configuration IOP/Solar Inertial Orientation	129
3-19	Concept Variations Responsive to Key Issues	138
3-20	Intermediate OSM Power Module	141
3-21	Features of Limited Capability Concept	142
3-22	OSM Growth Options	147
4-1	Definition of User Services Options	163
4-2	Power Module Cost Comparison	166

Section 1
INTRODUCTION

The Orbital Service Module (OSM) System Analysis Study was an eight-month study to investigate OSM requirements and concepts. The objectives of the study were to (1) define near-term (1981), cost-effective concepts to augment the power and duration capability offered to Shuttle payload users, and (2) show possible concept options that could evolve to provide free-flying power and other services to users in the 1984 time-frame.

The study tasks and schedule shown in Figure 1-1, indicate when meetings were held with the National Aeronautics and Space Administration (NASA) and major study products emphasized at these meetings.

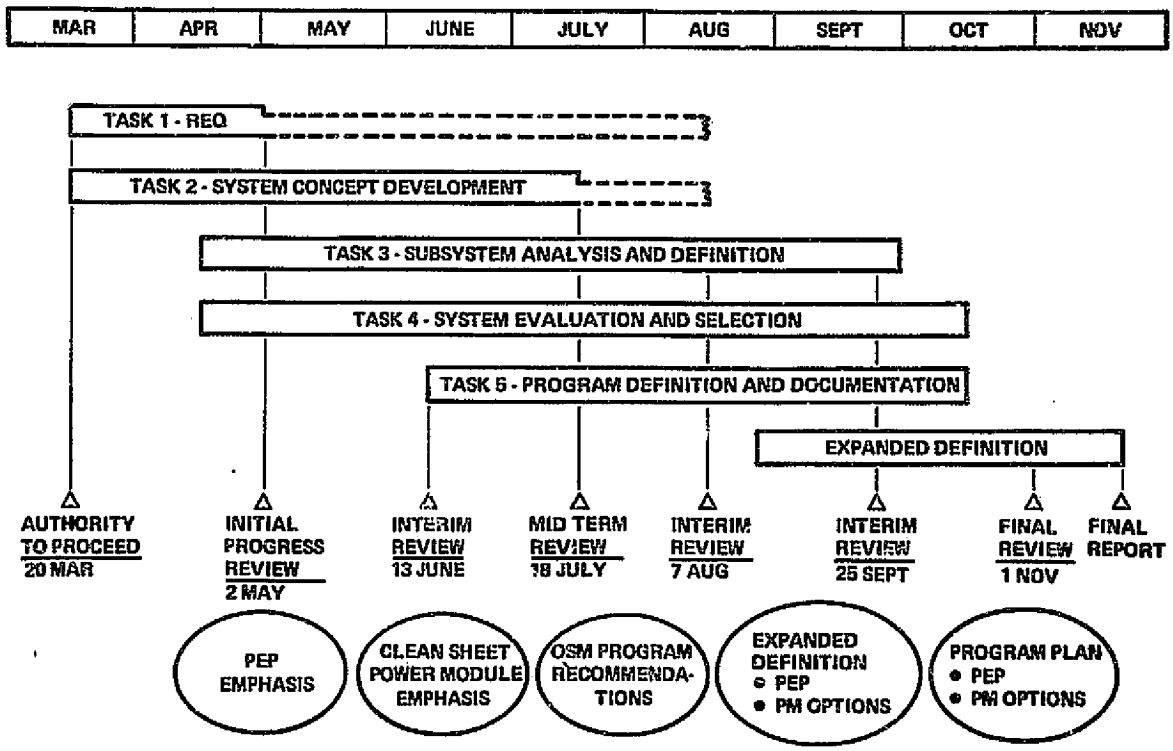

Figure 1-1. Schedule and Milestones

This study defined the Payload Extension Package (PEP) in response to the first objective and a free-flying Reference Design Power Module concept in response to the second objective. Also examined were variations to this Reference Design Power Module including lower cost concepts with corresponding reductions in user services.

1.1 PROJECTED USER NEEDS

The mission-derived design requirements for PEP and the Reference Design Power Module are summarized in Table 1-1 and discussed in detail in Section 2.

Table 1-1. Mission-Derived Design Requirements

	PEP	Reference design power module
Power, kW	21 - 29	35 - 40
Duration, days	to 30	continuous
Thermal, kW	21 - 29 w/orbiter	symmetric
Inclination, deg	28.5 - sun synch	28.5, 57, polar (29.5 nom)
Altitude, nmi	160 - 300	180 - 300 (200 - 235 nom)
Operational time period	1981 - 91	1984 on
Orientation	all attitude	all attitude
Stability	4 $\widehat{\text{sec}}$ - 1°	0.4 $\widehat{\text{sec}}$ - 0.1°
Acceleration level	10^{-3}G	10^{-5}G
Berthing/docking ports	—	4 - 6
Interface compatibility		
• Orbiter	yes	yes
• Multiple free flyers	no	yes
Orbit keeping interval	—	60 days
Comm/data	orbiter	to 10 mbps

Requirements derived for the 1981-1984 era, were based on the NASA Space Transportation System (STS) Mission Model (October 1977). This model supplied mission, payload, schedule, orbit, and weight data. Power and duration requirements were obtained from NASA planning documents (i.e., NASA Five-Year Plan, Outlook for Space), as well as from other agency and industry data (Aerospace 2.7 study). These time-phased requirements were then used in developing PEP.

ORIGINAL PAGE IS
OF POOR QUALITY

Requirements for the 1984 period and beyond were derived in a similar manner. The traffic model data and the power-duration overlay data are less precise, as would be expected for longer term predictions, and included additional inputs for dedicated modules from NASA personnel and previous study results.

However, the requirements listed for the Reference Design Power Module are far from firm. The list represents the best "strawman" set that can be extracted from existing data, and, for this reason, the study addressed a variety of Power Module concepts and configuration variations that are responsive to varying requirement levels.

1.2 PAYLOAD EXTENSION PACKAGE (PEP)

Figure 1-2 graphically illustrates elements of the PEP system. Section 3 discusses PEP design and subsystems in detail.

PEP is a Remote Manipulator System (RMS) deployed solar array which, when used in conjunction with the Orbiter fuel cells, offers power and mission duration to payloads considerably greater than that available with cryo tanks alone, as summarized in Figure 1-3.

CR54
46686

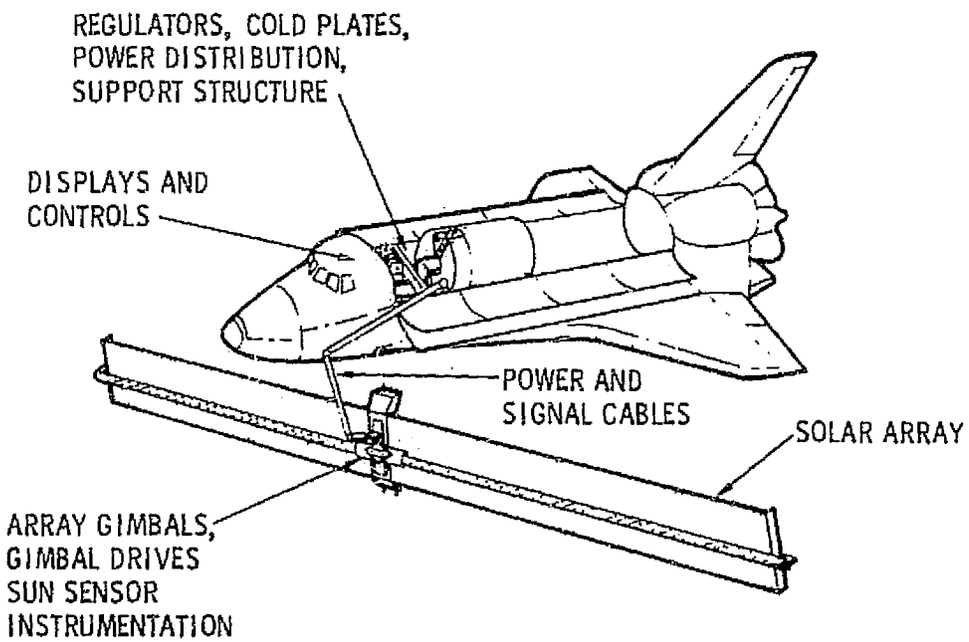

Figure 1-2. PEP Elements

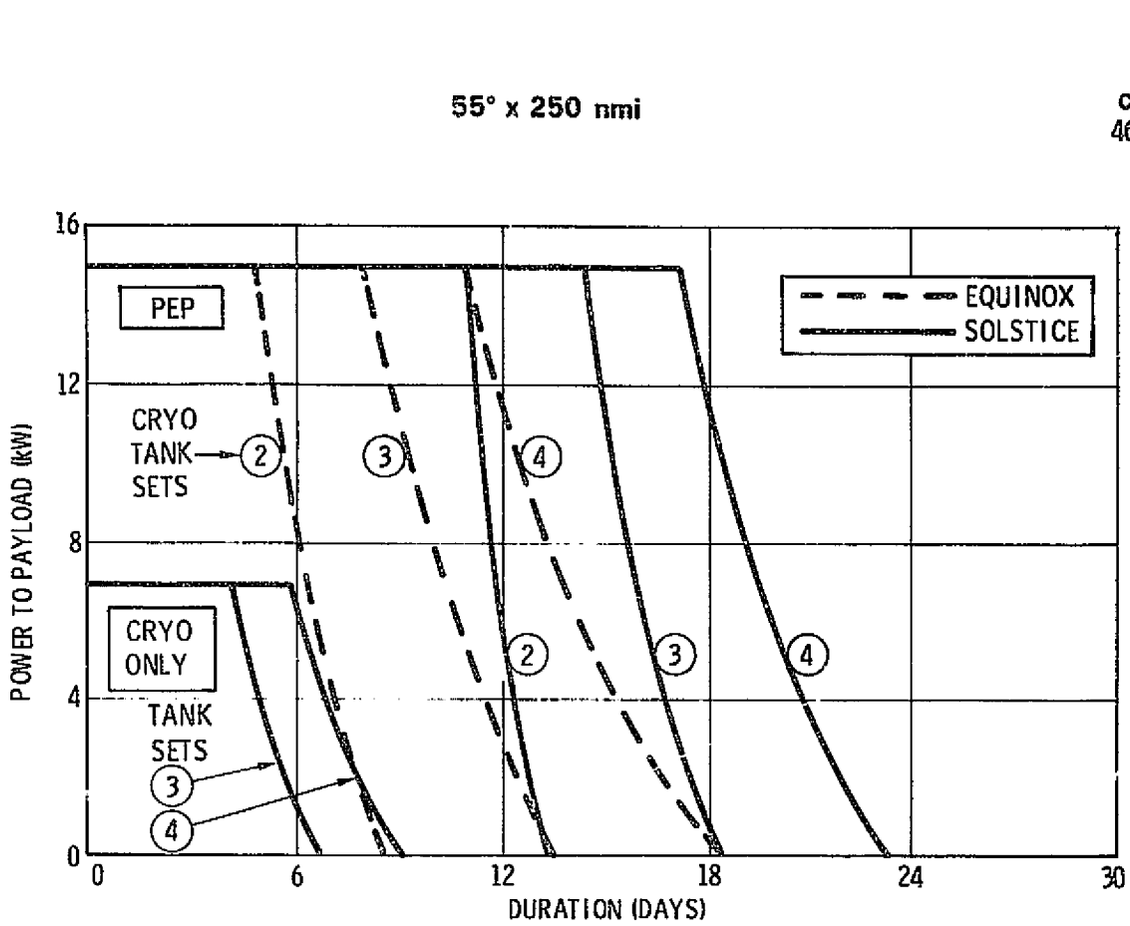

Figure 1-3. PEP Performance Benefits

Major elements of the PEP system are designed for installation using Orbiter bridge fittings in a manner compatible with the Spacelab tunnel, module, and/or pallet hardware.

The deployable/retractable Solar Array design incorporates Solar Electric Propulsion (SEP) technology. Array dynamic loads are compatible with a standard RMS which, in conjunction with the Orbiter, provides array orientation flexibility to support a variety of mission needs. Independent two-axis array gimbal control allows utilization of orientation flexibility while maintaining full solar array illumination.

Analysis of ground operations has shown that the PEP system is compatible with Orbiter turnaround and introduces no facility impacts. The PEP has been designed to interface with the Orbiter in a manner resulting in minimum scar. The all-up flight weight of the system is 2,010 pounds.

PEP cost, both nonrecurring and recurring, for one set of hardware is estimated at $47 million (constant 1978 dollars). Section 4 discusses PEP cost, schedules, and funding in greater detail.

1.3 POWER MODULE CONCEPTS

Based upon the "strawman" Power Module requirements shown in Table 1-1, numerous alternatives were assessed, and the concept shown in Figure 1-4 emerged as a reference full-capability configuration. Details of Power Module configuration and subsystem work are documented in Section 3.

The Reference concept is characterized by an array sized to produce 35 kW, end-of-life, regulated at 28 volt direct current (VDC) (nominally three times the size of the PEP array). Radiators provide the capability to fully reject the thermal load associated with the beginning of life output of the system plus parasitic loads associated with battery charging and power regulation. This heat rejection capability equates to 61.3 kW_e. A two-axis gimbal system on the core allows ± 90 degree array rotation about the Y-axis and 360 degree core module rotation about the X-axis, as shown in Figure 1-4. Control is provided by Control Moment Gyros (CMG's) augmented by a rotatable balance boom. The all-up weight of the system, which can be delivered to orbit in a single shuttle launch, is 28,422 pounds.

The study concludes that the Reference Design Power Module satisfies all requirements of Table 1-1. The symmetric configuration of the solar arrays minimizes gravity gradient bias moments when the array axis is in the orbit plane, resulting in balanced aero moments, thus minimizing CMG size. Orientation of radiator panels, perpendicular to the array, minimizes area and weight.

Separation of the solar array wings provides rendezvous and departure plume clearance without requiring array retraction, increases payload field of view, and allows central clustering of payloads which has favorable mass distribution properties with respect to gravity gradient torques and momentum buildup.

The two-axis gimbal system allows all attitude payload orientation (sequentially) and full-power production at all attitudes.

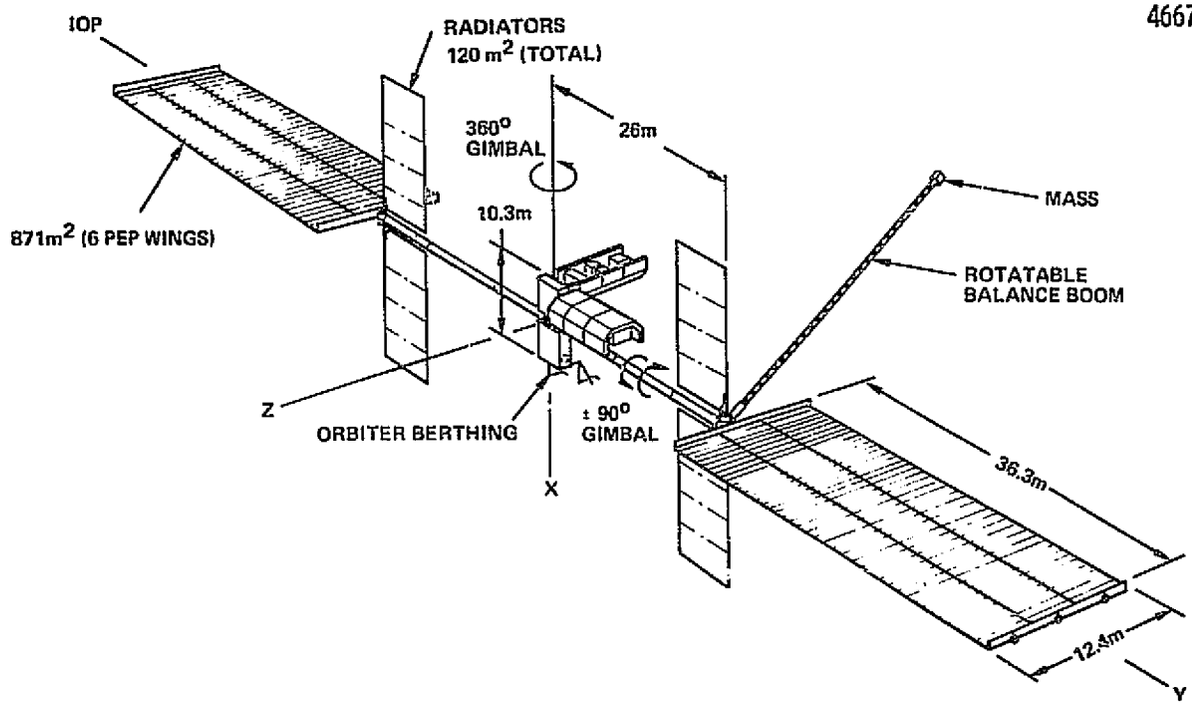

Figure 1-4. Full-Capability Reference Concept

Five payload berthing ports are provided along with a dedicated Orbiter port. Berthing with the OSM core above the Orbiter cabin assures adequate RMS reach for payload berthing operations.

Cost, both nonrecurring and recurring for one set of hardware, is estimated at $139 million in constant 1978 dollars. The $139 million Reference Design Power Module cost is heavily influenced by power level and other user related services such as pointing capability and number of berthing ports.

Because user requirements for the 1984-1990 time frame are admittedly soft, and recognizing the realities of funding limitations and competition for available funds, the Power Module variations examined were those reflecting a compromise of capability in return for reduced cost. A growth version of the reference design was also examined to establish an upper cost limit with respect to perceived requirements for power. These Power Module variations are summarized in Figure 1-5. Major cost differences with respect

ORIGINAL PAGE IS
OF POOR QUALITY

CR54
46712

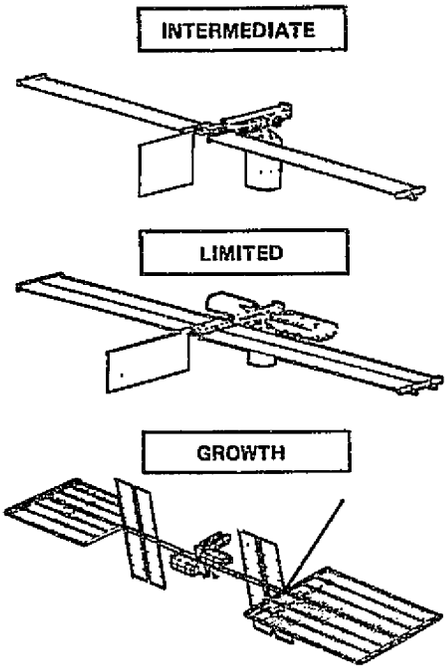

CHARACTERISTICS

- PEP SIZE ARRAY: 16 kW BOL, UNREGULATED
- APPLICATIONS: FREE FLYING PALLETS, HIGH INCLINATION
- 3 PAYLOAD PORTS
- WEIGHT 9,573 LB
- $ 11 M COMMON DEVELOPMENT WITH REFERENCE DESIGN
- COST $ 68 M

- 35 kW BOL, UNREGULATED
- AUSTERE VERSION OF FULL CAPABILITY CLASS
- 4 PAYLOAD PORTS
- WEIGHT 20,319 LB
- COST $ 106 M

- ~100 kW CLASS BOL, UNREGULATED
- SERVE HIGH-POWER USERS IN LATE 1980'S
- WEIGHT 48,342 LB
- $ 20 M COMMON DEVELOPMENT WITH REFERENCE DESIGN
- COST $ 198 M

Figure 1-5. Power Module Variations

to the Reference Design are reflected in lower solar array and power distribution subsystem costs for the Limited concept (approximately two-thirds Reference concept power level) and the Intermediate concept (approximately one-third Reference concept power level).

Structural/mechanical comparisons reflect differences in equipment support structure size, variations in numbers of berthing ports, the deletion of the counter balance boom in both the Limited and Intermediate designs, and the deletion of array axis and core module gimbals in the Intermediate design. The Intermediate design equipment support structure is not optimized for repair and maintenance.

Instrumentation, communication, and data subsystem costs reflect not only the variation in concept power levels but also differences in data handling capacity, i.e., 10 Mbps, 64 kbps and 4 kbps for the Reference, Limited, and Intermediate designs, respectively.

If the Intermediate Power Module were developed first, the $139 million total cost for the Reference Design Module would be reduced $11 million due to the nonrecurring common development cost. Conversely, should the Intermediate design be developed after the Reference Design (for use at polar inclination for example) its cost would be reduced by $11 million to $57 million.

A similar development cost commonality relationship exists for the "growth" version. The $198 million presumes $20 million development write-off against a previously developed "Reference" class Power Module.

Section 3 of this report discusses Power Module alternate design concepts in greater detail.

1.4 STUDY CONCLUSIONS

The study has resulted in high confidence in the requirements for PEP and in the feasibility and cost-effectiveness of the design approach. At maximum performance, PEP will double the power available to Orbiter payloads and triple the mission duration on orbit. No problems of technical feasibility have been identified to date and none are anticipated inasmuch as the basic system is predicated upon current technology and hardware already under development. Figure 1-6 summarizes PEP conclusions.

Although major uncertainties in requirements exist, with respect to Power Module, the interactions between key requirement variables and their corresponding concept impacts are well understood. For example, the configuration studies have clarified the interactions between power level, altitude, orientation, control torques, and field of view considerations.

Many of the design drivers are operational in nature. Control system sizing, for example, is highly dependent on the mission profile, the payload complement versus time, and the orientation requirements of the individual payloads versus time. System design is impacted by payload interactions such as concurrent power demands and interactions such as Orbiter-generated plume impingement affect configuration definition. Periodic reboost and on-orbit component replacement are examples of life-cycle considerations affecting design.

PAYLOAD REQUIREMENTS FOR POWER AND DURATION IN FEB 1981 TO FEB 1984 TIMEFRAME ARE WELL UNDERSTOOD

PEP WILL:
- SIGNIFICANTLY INCREASE POWER AND DURATION FOR PAYLOADS
- REDUCE ORBITER TURNAROUND TIME
- INCREASE ORBITER PAYLOAD
- PROVIDE FLEXIBILITY FOR OPERATIONS PLANNING

STUDY TO DATE HAS PROVIDED GOOD TECHNICAL UNDERSTANDING
- NO FEASIBILITY ISSUES
- DETAILED ORBITER INTERFACE DEFINITION INITIATED

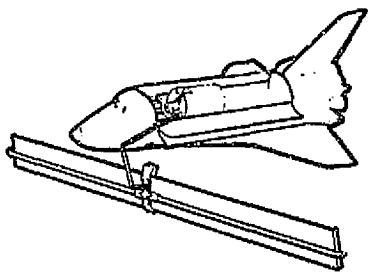

Figure 1-6. PEP Conclusions

Although configuration and subsystem designs are seen as highly dependent on requirement and operational variations, there appear to be no major technology barriers in any subsystem area. The OSM will extend the use of already-developed deployable structures. Array blankets of the SEP-PEP variety can be used, and several power regulation types are currently in development. CMG's of the Apollo Telescope Mount (ATM) variety are acceptable although improved reliability and capacity would be desirable. The gimbal mechanism is the most unique design feature of the concepts investigated. Depending on the final design concept selected, this device could include rotating fluid couplings, power and signal slip rings, and payload umbilical and berthing port connections. As such, it is perhaps the most significant individual development item.

Figure 1-7 summarizes OSM Power Module conclusions.

- INTERACTIONS BETWEEN MISSION REQUIREMENTS AND CONCEPT DEFINITION WELL UNDERSTOOD
- OPERATIONAL ISSUES HAVE MAJOR IMPACT ON CONCEPT DEFINITION:
  - ORIENTATION FLIGHT PROFILES
  - PAYLOAD INTERACTIONS
  - ORBITER/OSM INTERACTIONS
  - LIFE CYCLE SUPPORT
- NO TECHNOLOGY BARRIERS
  - PEP DEVELOPMENT RESOLVES ARRAY ISSUES
  - MECHANISM DEVELOPMENT - MOST SIGNIFICANT ITEM

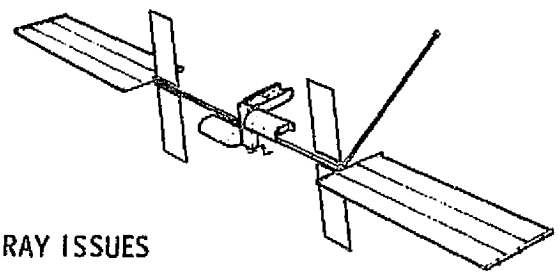

Figure 1-7. OSM Power Module Conclusions

ORIGINAL PAGE IS
OF POOR QUALITY

Section 2
MISSION ANALYSIS AND REQUIREMENTS DEFINITION

This section includes those analyses related to the Task I portion of the study – the generation of the system requirements for Payload Extension Package (PEP) and the Power Module concepts and their respective mission analyses.

2.1 PEP/POWER MODULE REQUIREMENTS ANALYSIS

The requirements derived for PEP and Power Module are different in actual values, but related in time and the manner in which they were derived. The system requirements and the schematic of the methodology used, are identified in Figure 2-1. The prime sizing and configuration influencing requirements are power, duration, and orientation which were determined for two time periods: 1981 to 1984, and 1984 and beyond. The early requirements

CR54
41804

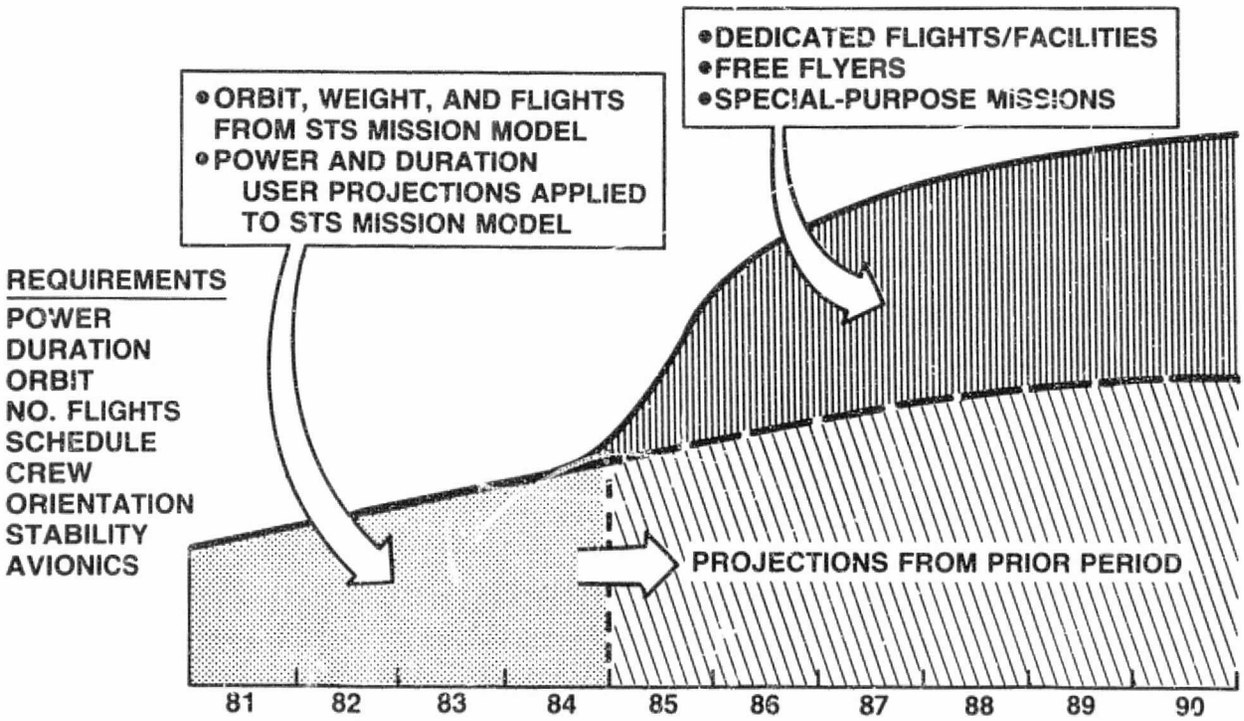

Figure 2-1. Requirements Analysis Methodology

were tied to the Spacelab sortie missions of the Shuttle traffic model (October 1977 Space Transportation System (STS) Mission Model). The data used directly from the model was flight schedule, payload identification, weight, and orbit requirements. Power and duration requirements were determined for each user area by an in-house survey of what was needed to satisfy a systematic growth in capability. Data sources are listed in the reference section and include the NASA Five-Year Plan, Outlook for Space reports, prior study results including the Space Station Systems Analysis Study, and direct conversation with selected user representatives. These power and duration requirements were then matched with the Mission Model data to produce a time phased set of requirements.

The approach for the 1984 and beyond period was similar with some additions. The prior data base was extended by projecting the growth in user requirements into this period. Specific user input data for dedicated missions and free-flyers was added.

The resulting data for the two periods is presented in the following subsections. It should be mentioned that the definition of these requirements is a continuing process; in fact, the data base was modified at several points during the study itself. As programs developed or user needs mature, the requirements became more firm. The requirements for the initial period (1981-1984) are relatively firm since they are based on actual mission schedules and planned mission detailed data. The 1984 and beyond requirements are less firm by their very nature. They are dependent upon predecessor results, and, since they are generally more expensive, they are more dependent on budgeting directives. The requirements for this period were thus treated parametrically, i.e., ranges were established and these, in turn, resulted in a variety of Power Module capabilities.

2.1.1 PEP Requirements

The requirements derived for the 1981 to 1984 time period as discussed below reflect the expected user needs for Shuttle Spacelab missions. As such, these requirements would be satisfied best by a PEP concept that could be launched with the payload thereby satisfying the unique mission and orbit requirements.

ORIGINAL PAGE IS
OF POOR QUALITY

2.1.1.1 Power

The power needed for each of the 49 Spacelab missions scheduled through 1984 in the 10-77 STS Mission Model is shown in Figure 2-2. The totals range from 17 to 37 kW. These totals include the power needed by the docked Orbiter (14 kW), the Spacelab equipment (1.5 to 4.2 kW depending on whether the mission includes a pallet or manned module), and the payload itself. The suggested design range for PEP is overlaid on the requirements. As shown, 29 kW would accommodate 80 percent of the missions. This appears to be a reasonable balance between the capability offered and the utilization of that capability. For reference, the baseline Orbiter capability is 21 kW. The high power missions (>29 kW) can be accommodated by rescheduling or by time-phasing the power delivered. The missions that make up these requirements are multiple payload missions, and no single payload requires these high power levels. Thus, they probably could be rearranged. It appears that power capability should be used as a mission formulation factor in conjunction with payload weight, orbit, center of gravity (CG), etc.

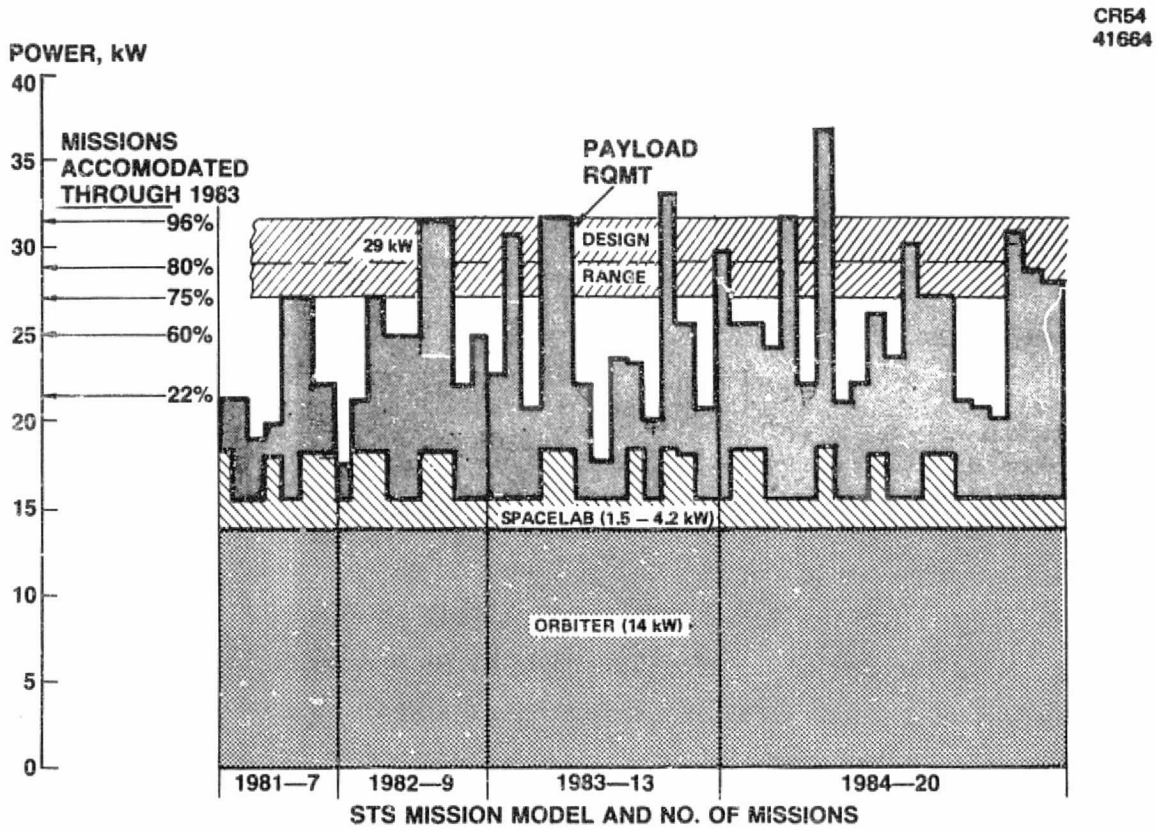

Figure 2-2. Power Requirements – STS Mission Model (Spacelab Missions)

2.1.1.2 Duration

The mission duration requirements needed by these same missions are shown in Figure 2-3. As illustrated, the duration required ranges from 7 to 60 days.

CR54
41659

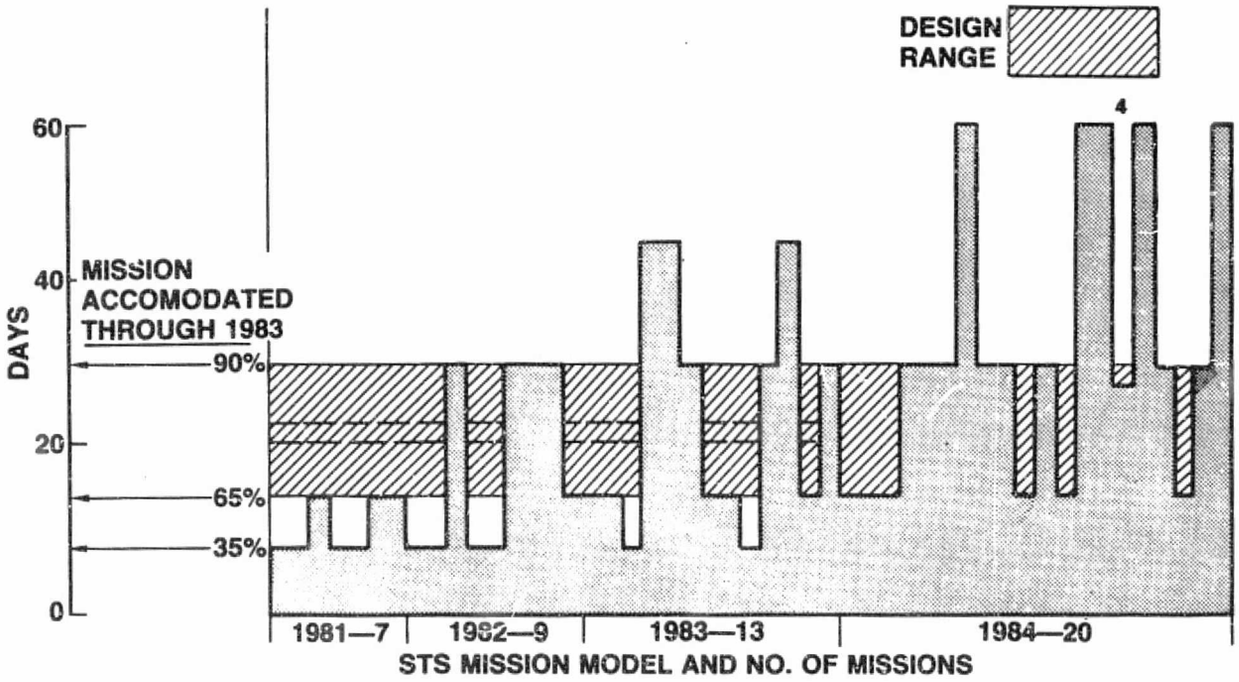

Figure 2-3. Mission Duration – STS Mission Model (Spacelab Missions)

For the first 3 years, a 30-day capability would satisfy 90 percent of the mission requirements. Thus, 30 days seems to be a reasonable limit for a PEP system. The few missions requiring longer duration could be deferred or accommodated over a series of flights.

2.1.1.3 Orbit Inclination and Altitude

The orbit requirements for the early Spacelab missions are shown distributed in altitude for the three inclination bands shown in Figure 2-4. The majority (two-thirds) of the missions are at 28.5 degree inclination to take advantage of increased Orbiter performance and to be co-manifested with missions that do require 28.5 degrees, i.e., transfer to geosynchronous orbit. The latter are indicated by the connecting dashed lines. The solid lines indicate multiple altitude required for the Spacelab mission itself. The missions whose payloads require more than 7 kW are indicated by an ⊕. Most of these occur at the lower inclination.

ORIGINAL PAGE IS
OF POOR QUALITY

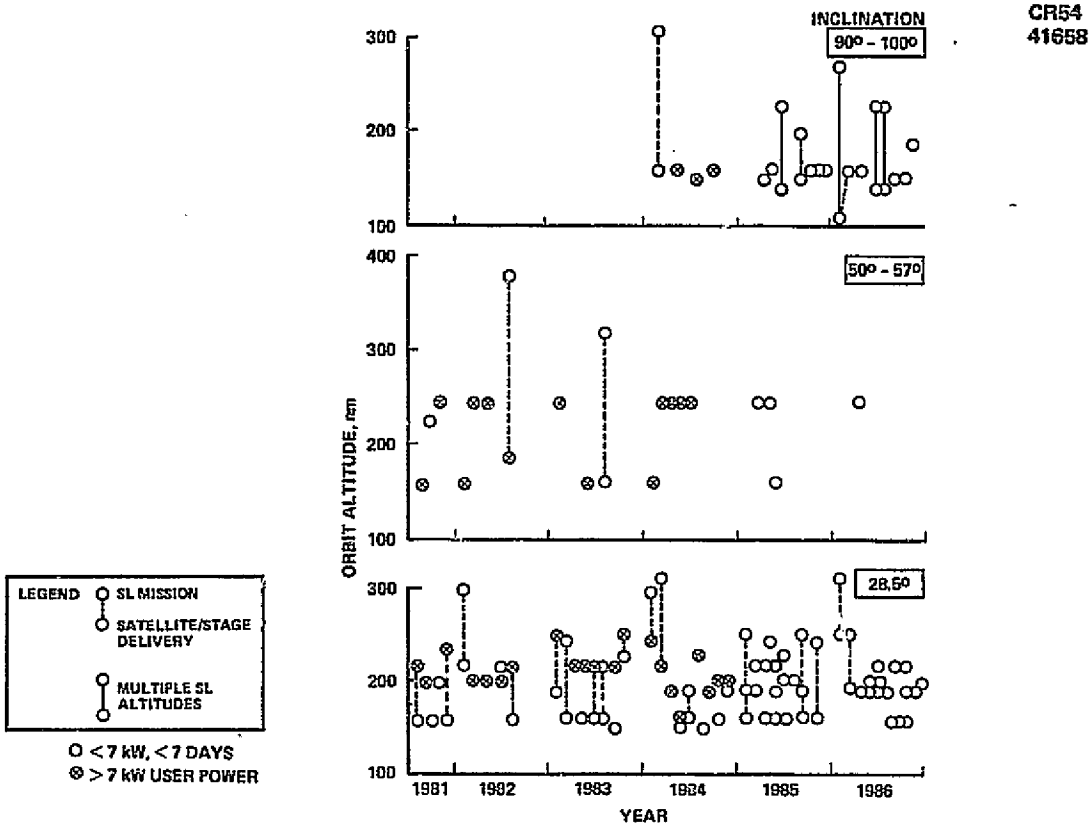

Figure 2-4. Orbit Inclination/Altitude Requirements STS 10-77 Model-SL

The altitude spread indicates the diverse nature of the experiment requirements themselves. Further analysis would probably indicate that some of the missions could be accommodated at a single altitude; however, it is felt that the requirement for a variety of altitudes will remain. The PEP system, therefore, is required to accommodate missions at inclinations from 28.5 degrees through sun synchronous (~98 degrees). The design altitude region should include 160 to 300 nmi.

2.1.1.4 Orientation

The orientation requirements for the user areas are shown in Figure 2-5. The individual requirements range from none to a series of specific orientations required for a particular mission. By user area, Space Processing and Life Sciences require the orbit environment only and do not need a specific orientation. The other areas require pointing at the earth, sun, or stellar targets. Further refinements on these require more specific requirements, i.e., nadir, earth horizon, etc. Because of the range of orientations required

USER AREA	DESIRED ORIENTATION	RECOMMENDED ORIENTATION
• SPACE PROCESSING	ANY	X-LV, Z-POP (GG)
• LIFE SCIENCES	ANY	X-LV, Z-POP (GG)
• EARTH OBSERVATION	EARTH ORIENTED	Z-LV, X-VV
• SPS	EARTH ORIENTED	X-VV, Z-POP
• SOLAR OBSERVATION	SUN	Z-SOLAR, X-IOP
• ASTRONOMY	INERTIAL	Z-INERTIAL, X-IOP

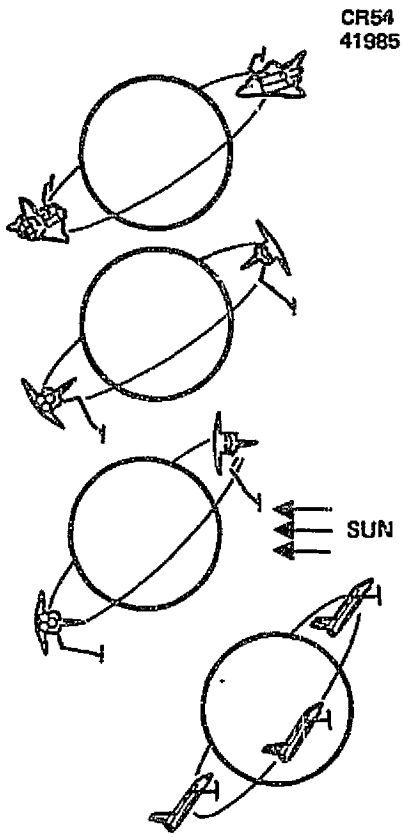

Figure 2-5. Orientation Requirements

for specific user areas and the needs of potential composite missions, PEP is required to have all attitude capability with the ability to accommodate a changing orientation as the mission progresses.

2.1.1.5 PEP Requirements Summary

The requirements imposed on PEP are summarized in Table 2-1. In addition to those discussed above, other requirements are included. Missions requiring application of PEP are found throughout the mission model. It is therefore expected that PEP would be utilized through 1991.

2.1.2 Power Module Requirements

As discussed earlier, the 1984 and beyond requirements were determined by projecting the prior era requirements and adding free-flyer data where applicable. The Power Module (to be designed) consists of an orbiting system providing power and other utilities to users on a long-term basis. Thus, user requirements themselves would form the basis of the Power Module requirements, i.e., the Orbiter is a periodic visitor only.

Table 2-1. Mission-Derived Design Requirements

	Increment II PEP
Power, kW	21 - 29
Duration, days	to 30
Thermal, kW	21 - 29 w/Orbiter
Inclination, degree	28.5 - sun synch
Altitude, nmi	160 - 300
Operational time period	1981 - 91
Orientation	all attitude
Stability	4 $\widehat{\text{sec}}$ - 1°
Acceleration level	10^{-3} g
Interface compatibility	
• Orbiter	yes
• Multiple free flyers	no
Comm/data	Orbiter

2.1.2.1 Power and Duration

Power and duration requirements for six objective areas are shown in Figure 2-6. Materials Processing is the dominant requirement at 36 kW power and continuous operation. The other user power requirements are in the 15 kW range for power except for the communications and Solar Power Satellite antenna tests. These could be handled on a short-term peak overload or by using storage batteries. The duration requirements for all areas eventually become long-term.

2.1.2.2 Orientation

Those user areas with orientation requirements such as Solar and Earth Observations, Astronomy, and Communications are illustrated in Figure 2-7. Materials Processing and Life Sciences do not have orientation requirement. Figure 2-7 indicates that Solar and Earth Observations have many specific pointing requirements that are nominally earth-, solar-, and stellar-oriented with subsets of these shown. Furthermore, the orientations needed are intermittent or long-term. Simultaneous multiple pointing is nominally needed for both Solar and Earth Observations. Each requires solar, earth, and cold space viewing with Solar Observation and also requires some celestial targets. This simultaneous multiple viewing, i.e., earth and sun, is needed to correlate earth phenomena with corresponding sun activity. This

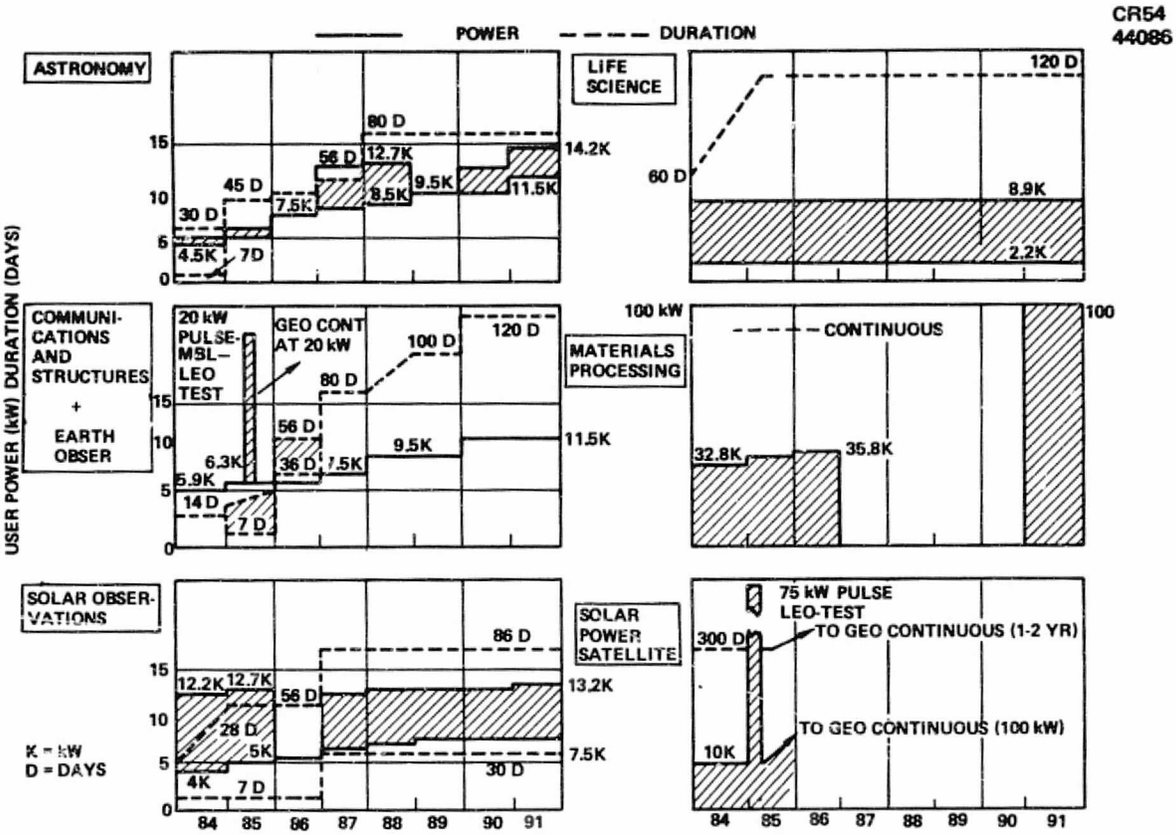

Figure 2-6. User Power and Duration Requirements

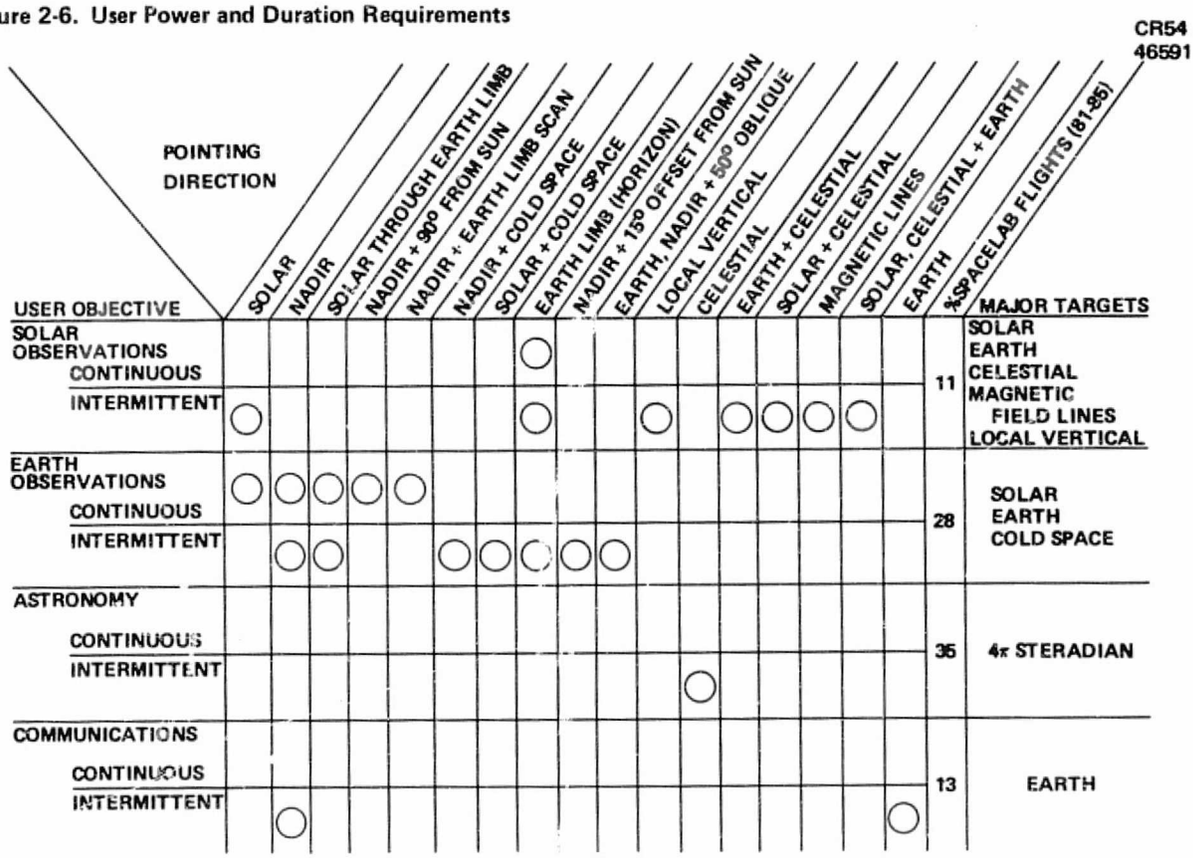

Figure 2-7. Multiple Viewing Requirements

ORIGINAL PAGE IS
OF POOR QUALITY

requirement was found to have a major effect on the configuration and the port design. Additional analysis of this emerging requirement is needed prior to implementing these more complex solutions.

Astronomy and communications require singular pointing directions. The nature of astronomy activity, though, requires the ability to view a sequence of celestial targets as the system proceeds around the orbit.

The pointing accuracy and stability required for these four user areas are summarized in Figure 2-8. Pointing accuracy is defined as the degree of alignment between the intended target and the steady-state line-of-sight of the instrument; stability refers to transient errors about that line-of-sight. The range of requirement for each is large, 0.2 arc sec to several degrees. Solar Observation and Astronomy require the tightest accuracy. The Skylab mission and expected Orbiter capability indicate that the Power Module itself will supply pointing to about 0.6 degree accuracy. Beyond that, Instrument Pointing Systems and Experiment Pointing Systems will be accommodated by the Power Module to meet the requirements.

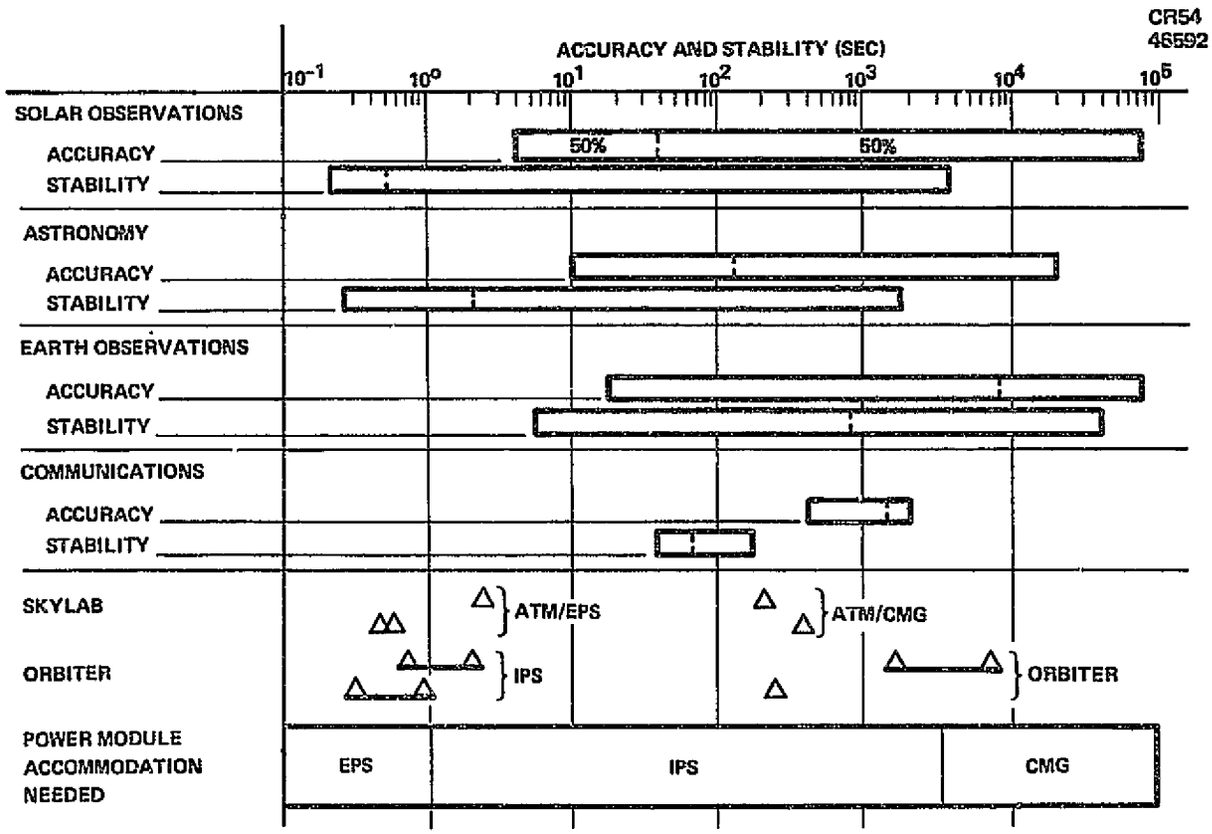

Figure 2-8. Pointing Requirements and Potential Solutions

2.1.2.3 Orbit

The orbit requirements for a Power Module must be examined with care since it does not have the flexibility ease of a single mission system. Power Module user requirements are summarized in Table 2-2. The manner in which these users are accommodated (combined together, schedule, etc.), will influence the orbit selection. The unique requirements from Table 2-2 are for Materials Processing, i.e., high power, continuous duration, any orbit or orientation, and a low g-level. If a Power Module system was formulated to meet this requirement then that same capability could be used to accommodate combined users from other areas. Figure 2-9 shows potential combinations. At 28.5 degrees, a 36 kW Power Module could accommodate Materials Processing, Solar Power Satellite Testing, or Communications and Life Sciences.

Table 2-2. User Requirement Summary, 1984–1991

	Materials process	Life sciences	Earth OBS comm	Astronomy	Solar OBS	SPS
Power, kW						
user	29–31	1–4	4–20	3–10	2.5–9	10–25(75)
w/support	33–36	2–9	6–20	5–14	5–13	10–25
Duration, days	cont	60–120	7–120	30–80	7–86	cont
Inclination						
any	X	X				
28 degree			X	X		X
55 degree			X	X	X	
polar			X	X	X	
Orientation						
any	X	X				
solar			X		X	
stellar				X		
earth			X		X	
Stability, $\widehat{sec}$	—	—	30	0.1	0.1	0.25 degree
Crew	No	3–4	0–4	0–4	2–4	2–3
G-level, g's	10^{-5}	10^{-3}				

At 55 degrees and/or Polar inclination, Earth Observation, Solar Observation, and Astronomy could be combined within the capabilities of the system. If these latter were accommodated singly, a smaller Power Module at high inclination would suffice. A further indication of the user inclination needs

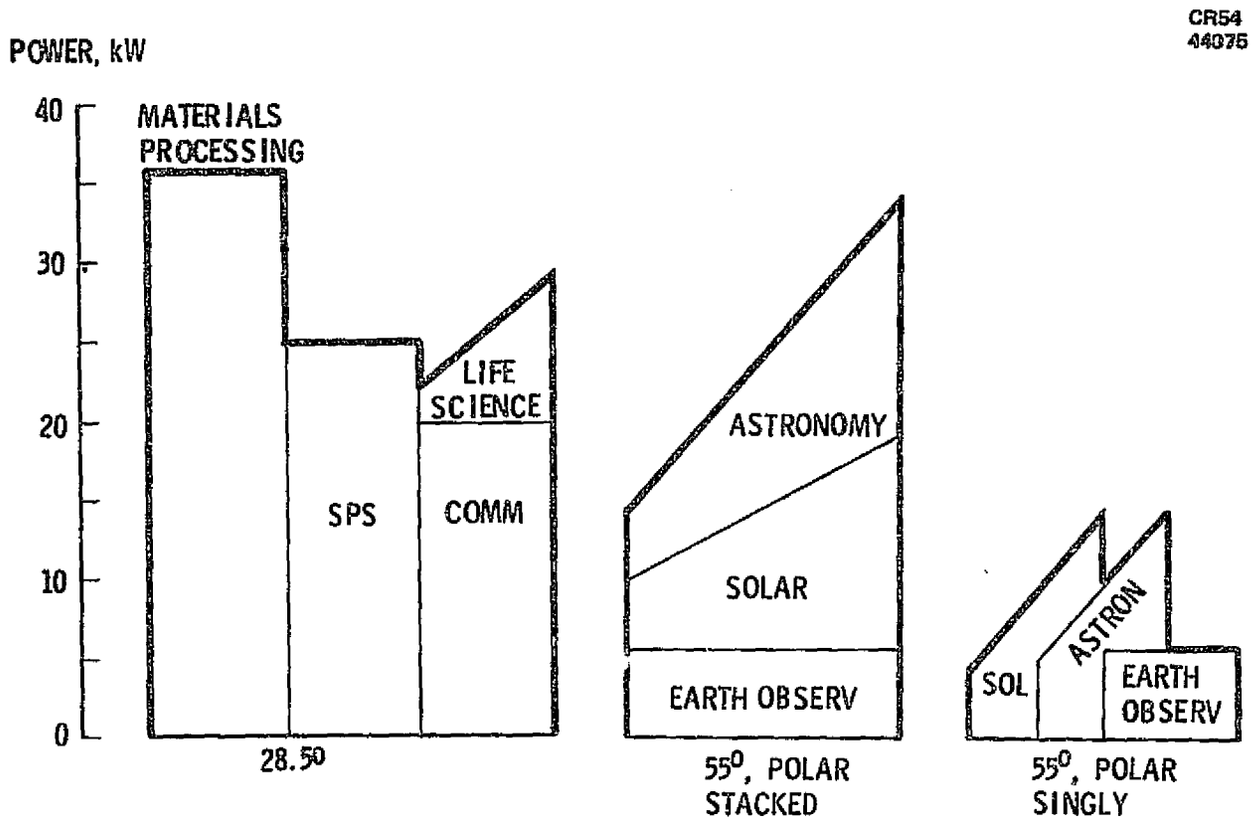

Figure 2-9. User Power Stack Requirements

are indicated by the scheduled sortie missions from the 10-77 STS Traffic Model in Figure 2-10. Sixty-three percent of these are at 28.5 degrees with 9 percent at mid-inclination and 28 percent in the polar region. From a user standpoint, the Power Module orbit requirements are somewhat indeterminate. Mission influences, program objective emphasis, funding availability, etc., will influence the final selection. In the interim, the Power Module should be designed for operation capability at inclinations from 28.5 degrees to sun synchronous. Additional factors including altitude selection are discussed in Section 2.3.

A summary of the PEP and Power Module requirements is listed in Table 2-3. As mentioned earlier, these are not yet firm and will change as the program matures. For this reason, ranges of power and orientation capability were examined to determine their effect on the system design.

2.2 PEP MISSION ANALYSIS

Mission analysis of PEP included analysis of the system performance and the applications of PEP to early Orbiter flights.

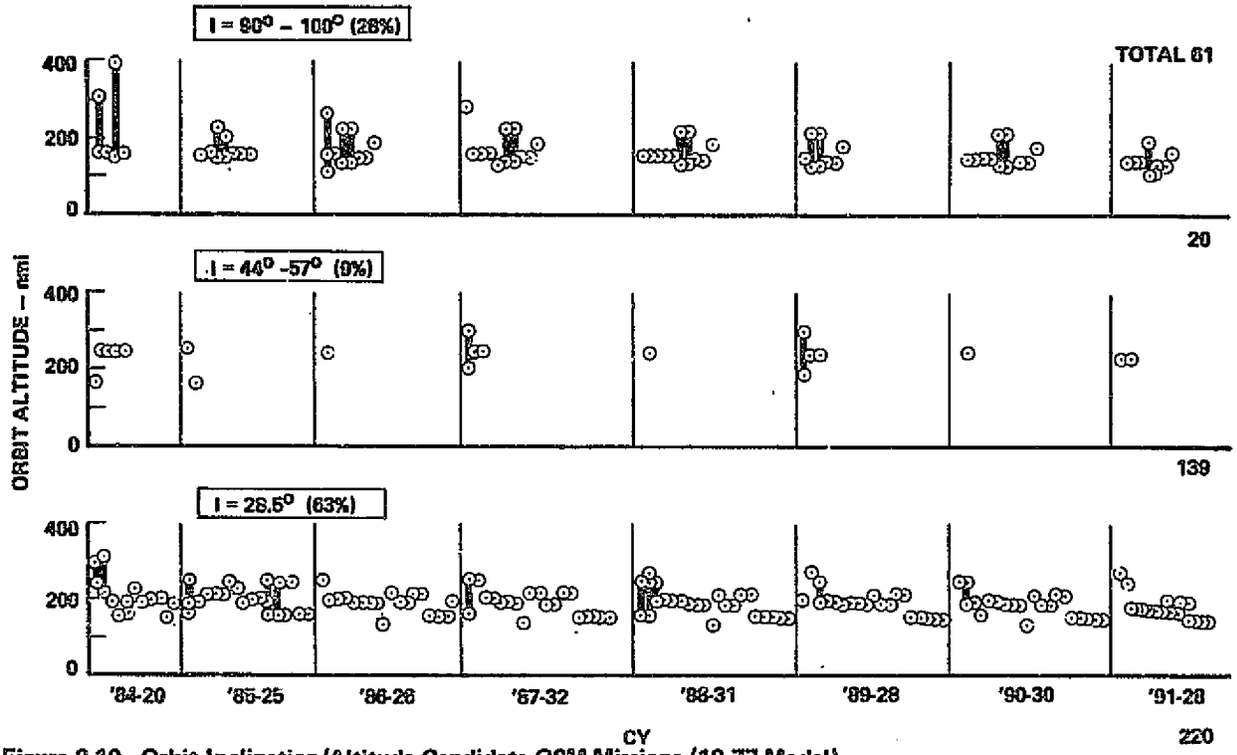

Figure 2-10. Orbit Inclination/Altitude Candidate OSM Missions (10-77 Model)

Table 2-3. Mission-Derived Design Requirements

	Increment II PEP	Full-capability increment IV OSM power module
Power, kW	21 - 29	35 - 40
Duration, days	to 30	Continuous
Thermal, kW	21 - 29 w/orbiter	Symmetric
Inclination, Degree	28.5 - sun synch	28.5, 57, polar (28.5 nom)
Altitude, nmi	160 - 300	180 - 300 (200 - 235 nom)
Operational time period	1981 - 91	1984 on
Orientation	All attitude	All attitude
Stability	4 $\widehat{\text{sec}}$ - 1°	0.4 $\widehat{\text{sec}}$ - 0.1°
Acceleration level	10^{-3} G	10^{-5} G
Berthing/docking ports	—	4 - 6
Interface compatibility		
• Orbiter	Yes	Yes
• Multiple free flyers	No	Yes
Comm/date	Oribter	to 10 mbps

2.2.1 PEP System Performance

Since the PEP concept is a hybrid system using PEP solar panels for power during the sun portion of the orbit and Orbiter fuel cells for power during the dark portion, its performance (in terms of power, duration, and payload capability) is a function of many parameters including orbit altitude, inclination, β angle (angle between sun line and its projection on the orbit plane), fuel cell idle level, and number of fuel cell cyro tanks. The β angle varies from zero to a maximum equal to the sum of earth tilt (23.5 degrees) plus orbit inclination.

The power and duration capability of PEP is shown in Figure 2-11 for a 55 degree x 250 nmi orbit. Power shown is power delivered to the payload. In addition, 14 kW is being supplied to maintain the Orbiter on orbit. As seen, with the nominal four cyro tank sets, PEP can provide 15 kW to the payload for 17 days for a near Solstice launch. This would vary down to 11 days for a near equinox launch. In the event that the Orbiter included less than the nominal four cyro tank sets, the performance is also shown for two and three tank sets. A comparison with a fuel cell only capability shows that

CR54
46698

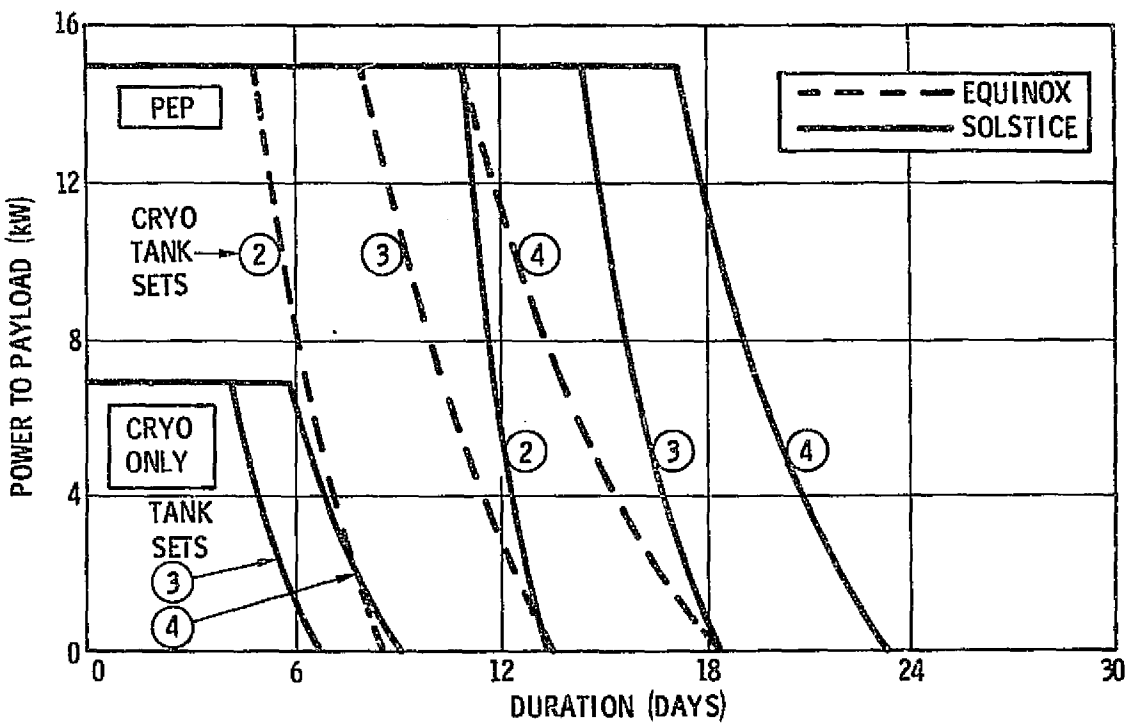

Figure 2-11. PEP Performance Benefits 55° x 250 nmi

PEP with two cyro tank sets provides at least as much and up to twice as much capability as the fuel cell system with four cyro tank sets. The duration capability variation in launch data for a total delivered power (payload plus 14 kW for Orbiter) of 21 and 29 kW is shown in Figure 2-12 for both 28.5 degrees and 55 degrees.

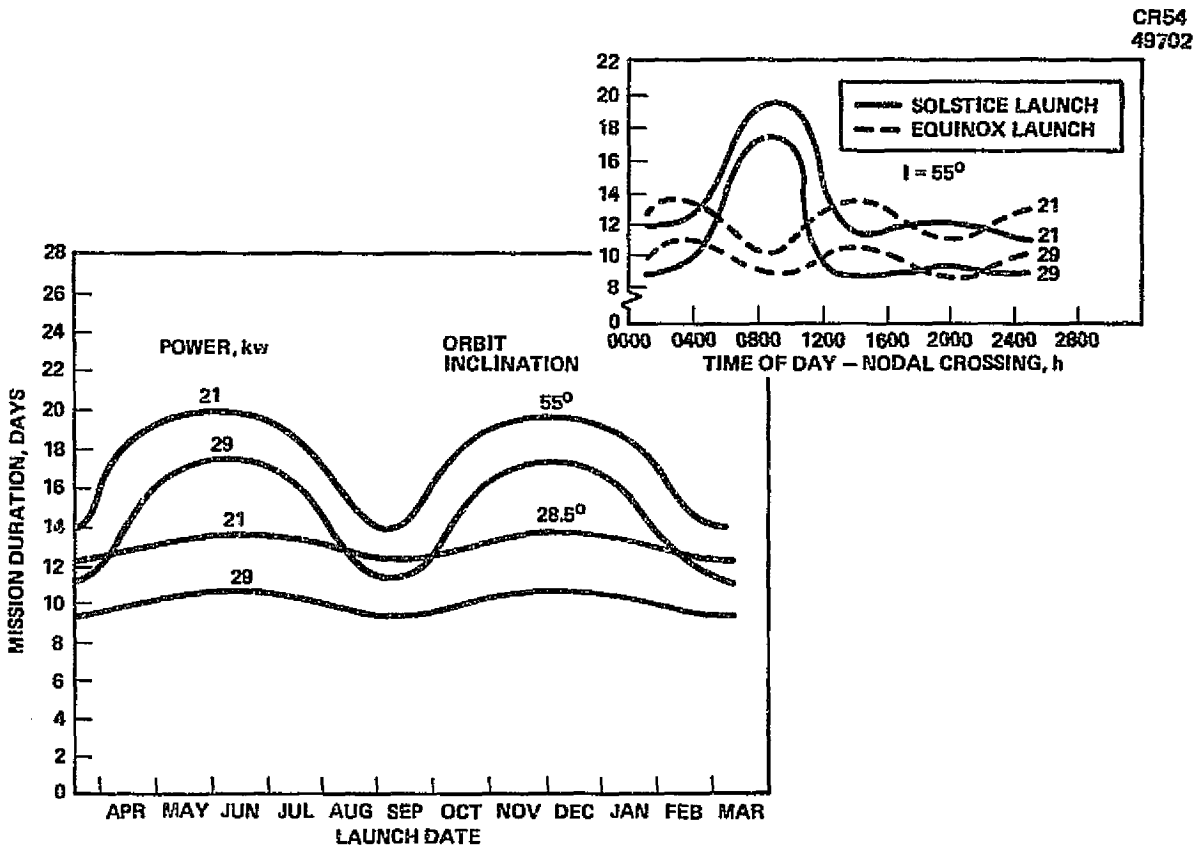

Figure 2-12. PEP Mission Capability, 55° x 250 nmi (4 Tank Sets)

The sensitivity of PEP performance to small changes in key parameters was determined. An increase in the nominal fuel cell idle level from 1 kW per fuel cell would reduce the mission duration capability by 2.5 days/kW at 21 kW level and by 1.8 days/kW at 29 kW. The duration sensitivity to orbit inclination is about 0.25 days/degree at either power level. Duration sensitivity to altitude is about 0.14 to 0.25 days per 10 miles variation.

The payload delivery capability of the Orbiter is effected by the up and down weight allowance that must be made for PEP. The weights involved are the weight of the PEP itself - 2,010 lbs and the chargeable weight of the cyro tank sets needed. These are nominally 1,760 lbs up and 760 lbs down for each tank

set needed. For a typical early mission, the derated delivery capability of the Orbiter to 55 degrees x 250 nmi is 33,000 lbs, as shown in Figure 2-13. As a function of the power provided to the payload and the mission duration, the net payload capability, using PEP, would be 27,000 lbs for a 21-day mission. For a comparable mission using only fuel cells, the payload capability would be about 8,000 lbs. The payload penalty shown for each system is total penalty -- not just that chargeable to the user.

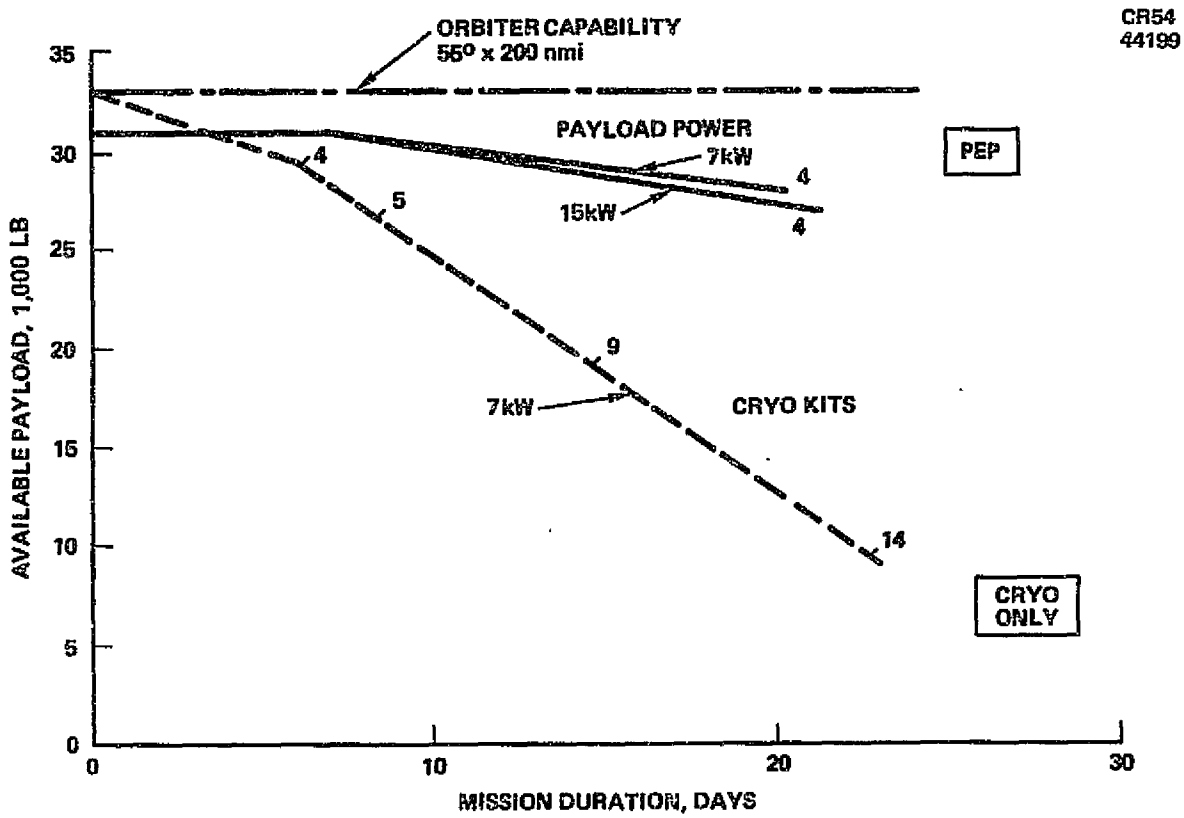

Figure 2-13. Payload Delivery Capability

2.2.2 PEP Mission Application

The capability of PEP was tested by measuring its potential application to early Spacelab Sortie Missions. Of the first 17 operational Orbiter flights shown in Table 2-4, seven (circled) had payload of opportunity (unassigned payload capability) capability that could incorporate PEP. In addition, Flight No. 14, Spacelab 2, was examined in detail because of the long-duration desired by that mission. As an example of how the seven were analyzed, data for Flight 9 is shown overlaid on the PEP performance capability curve of Figure 2-14. The as planned mission capability of 1 kW for 5 days

Table 2-4. STS Flight Assignment Baseline, 10-77

Flight No		Preliminary launch date	Cargo
7		5/30/80	LDEF deliver, (oft pallet of opportunity)
8		7/1/80	TDRS-A, SBS-A
9		8/1/80	(Two pallets of opportunity), GOES-D, ANIK—C/1 ← EXAMPLE
10		11/14/80	TDRS-B, SBS-B
11		12/18/80	Spacelab No 1, long module with pallet
12		1/30/81	TDRS-C/ANIK—C/2
12	Alternate	1/30/81	(One pallet of opportunity), INTELSAT V, ANIK—C/2
13		3/3/81	(Two pallets of opportunity), GOES-E, (SSUS-D of opportunity)
14		4/7/81	Spacelab No 2, four pallets with igloo ← SPACELAB 2
15		5/13/81	TDRS-D/either SBS-C or ANIK—C/3
16		6/16/81	Spacelab No 3, (SSUS-D of opportunity)
17	Up	7/16/81	INTELSAT V, (SSUS-D of opportunity)
17	Down	7/19/81	LDEF Retrieval
18		7/29/81	One pallet for space processing, (one pallet of opportunity), (STP-P80-1)
19		9/2/81	Five spacelab pallets with igloo, physics and astronomy
20		9/30/81	Spacelab long module with pallet, life science and astronomy pallet
21	Up	10/14/81	(One pallet of opportunity), (MMS opportunity), OMS kit
21	Down	10/19/81	SMM retrieval
22		11/25/81	Spacelab long module with pallet, ESA-E3
23		1/5/82	Jupiter orbiter probe

MCDONNELL DOUGLAS

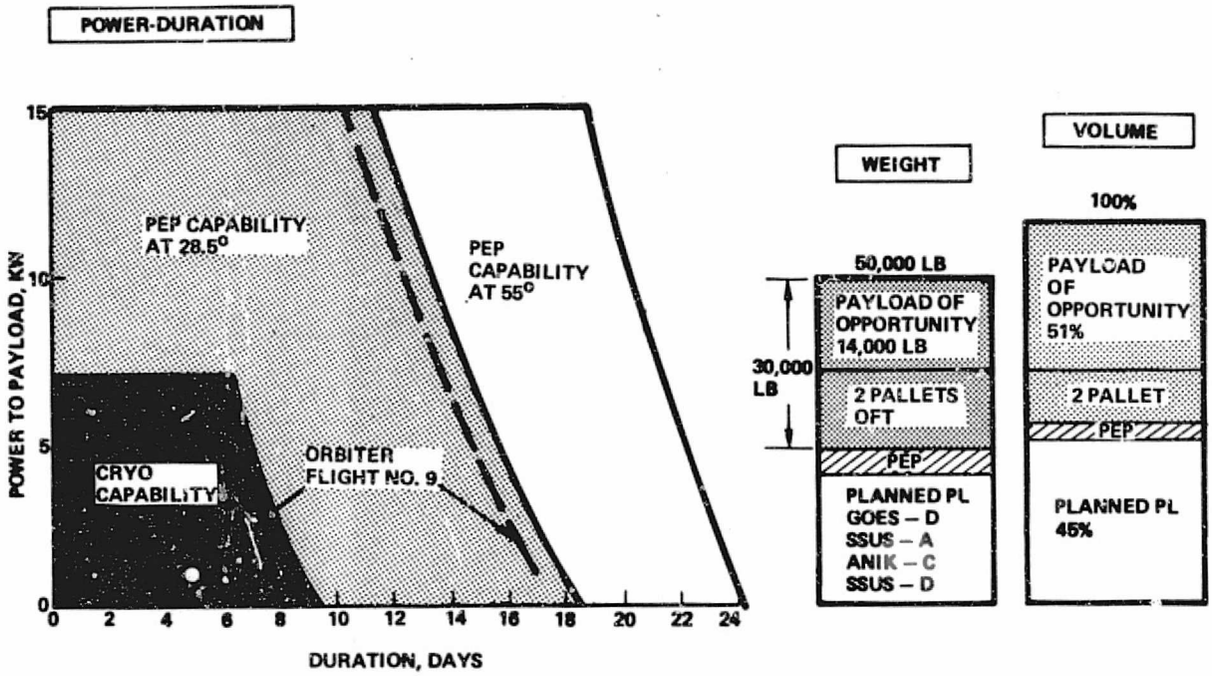

Figure 2-14. PEP Performance Capability

using fuel cells only could be extended to the dashed line using PEP. This higher power and longer duration capability could allow the accommodation of additional payloads. The right side of Figure 2-14 indicates that there is room on the mission for 2 pallets plus 14,000 lbs of additional payload for a total of 30,000 lbs above that planned. There is also space equivalent to about half the payload bay for additional payload. Thus, PEP can augment the basic Orbiter capability to accomplish more on a given mission. This analysis was done for all seven of the candidate early missions and the results summarized in Figure 2-15. The added capability for each mission using PEP is shown. The payload of opportunity available after accounting for the weight of PEP totals 48,000 lbs—the equivalent of more than one flight. The additional duration (days) and electrical energy (kWh) available for each mission is large and totals 66 days and 22,272 kWh, the equivalent of 10 and 21 additional Orbiter flights. Clearly, PEP would augment the basic Orbiter and allow more of its capability to be used.

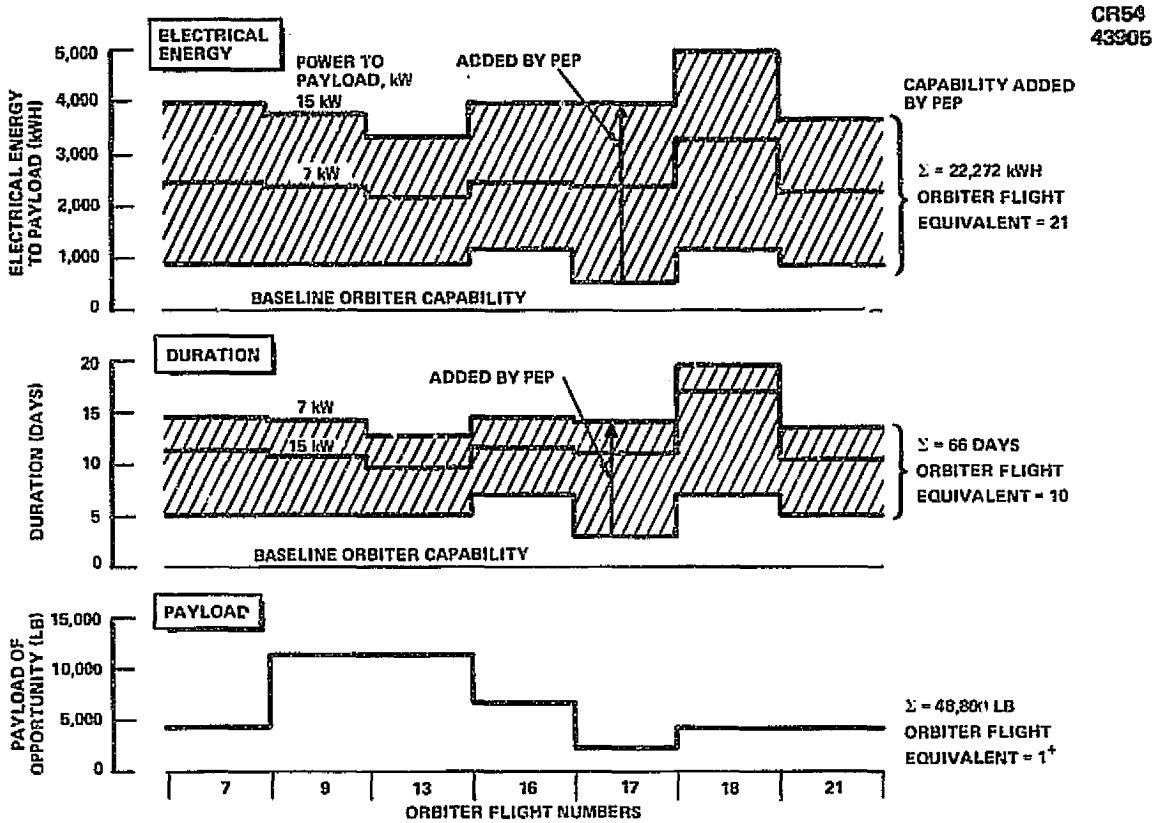

Figure 2-15. PEP Co-Manifest Capability Flights 7 Through 23

Flight No. 14, Spacelab 2, was examined in detail for PEP application. This planned mission has a payload power duration requirement as shown in Figure 2-16; in fact, the desired mission duration is about 11 days. With the baseline (four Orbiter cyro tank sets) this mission cannot be accommodated using fuel cells only; but the addition of PEP would extend the capability to beyond that desired. In addition, the payload weight, CG location, and orientation history were examined and found to be compatible with the PEP application. These analyses indicate the potential of PEP and illustrate how its use can allow the exploitation of the full capability of the Orbiter.

2.3 POWER MODULE MISSION ANALYSIS

The major mission analyses performed on the Power Module included system performance, mission applications, orbit selection, and orbit-keeping. These are discussed below.

ORIGINAL PAGE IS
OF POOR QUALITY

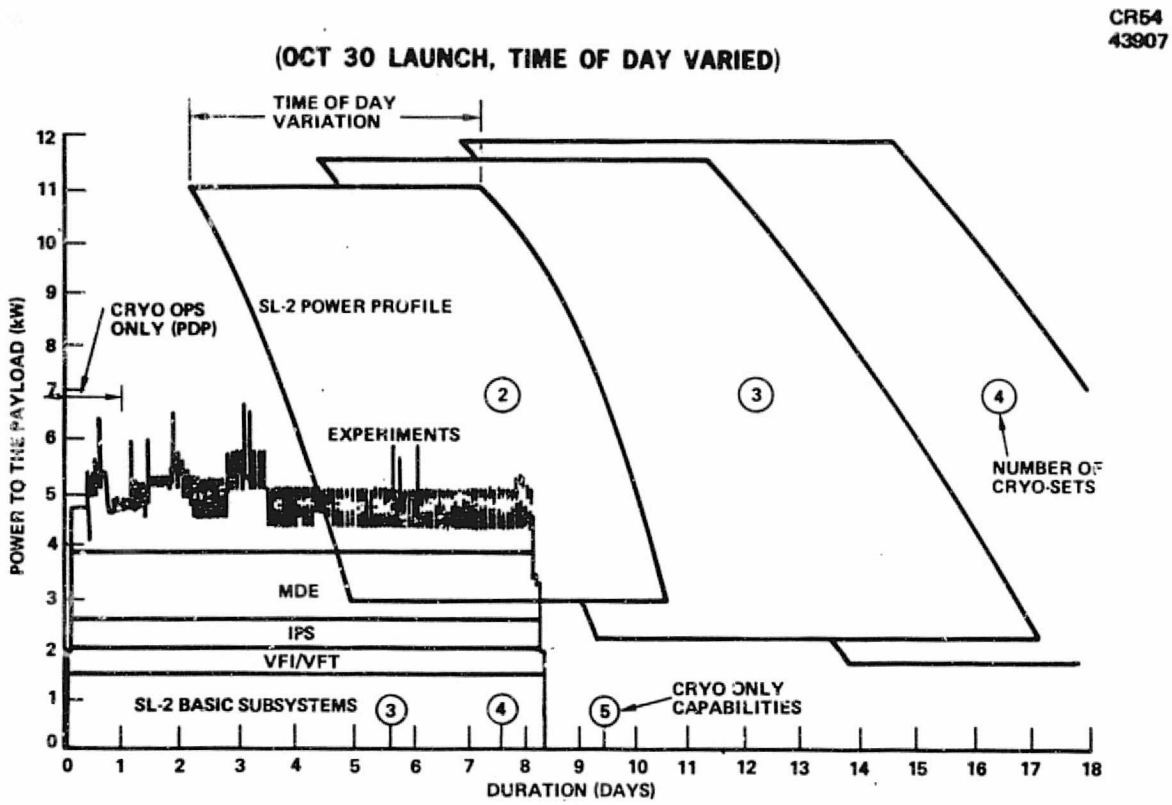

Figure 2-16. Spacelab 2 Power-Time Profile Using PEP

2.3.1 System Performance

The Power Module is an orbiting system designed to provide power and other utilities to potential users on a long-term basis. It would be periodically visited by the Orbiter for payload and subsystem servicing. Being a long-term system, its performance capability (power output) is a function of the changing light/dark cycle due to β angle variations, degradation of array output with time, and the manner in which it is used. The continuous power output as a function of time after launch is shown in Figure 2-17. Recall that the nominal requirement was 35 kW. As shown, that is the design point for regulated output after 5 years of operation for the worst orbital condition ($\beta = 0$; β is the angle between the sun line and its projection on the orbit plane). This minimum regulated output is 42 kW at Beginning-of-Life (BOL). This 17 percent difference in 5 years is due to degradation in the array output. (Ultraviolet -2 percent, Radiation -13 percent, and Thermal Cycling -2 percent.) This extra potential may be advantageous to some users, i.e., Materials Processing. As shown in Figure 2-17, the actual output capability varies due to β angle changes. A maximum capability of 55 kW is available

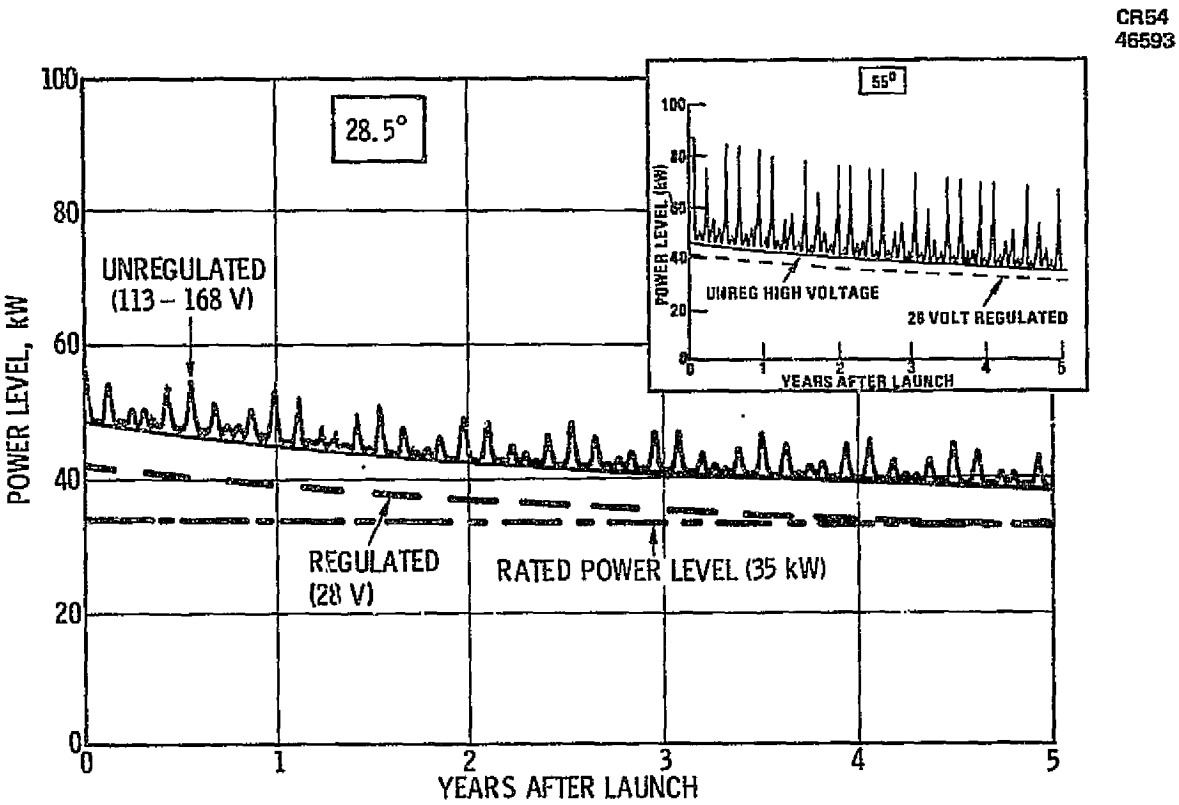

Figure 2-17. Power Capability

at 28.5 degree inclination. The β angle history varies cyclically with the rotation of the earth around the sun and the regression of the orbit plane about the North Pole. The result is to vary the day-night cycle and thus, the power generation capability. The cyclic unregulated output is shown in Figure 2-17 for both 28.5 degree and 55 degree inclinations. A corresponding cyclic increase above the minimum level is also generated for the regulated output, though not shown on the curve.

At higher inclination, i.e., 55 degrees, the power level capability is increased as seen because of the higher maximum β angle; up to 90 kW is available for short periods.

The output of the array over a daylight portion of the orbit is shown in Figure 2-18. As the Power Module enters the sunlight at dawn, the output capability is high because of the low temperature of the cells. As the array warms, the output decreases until local noon beyond which it increases again

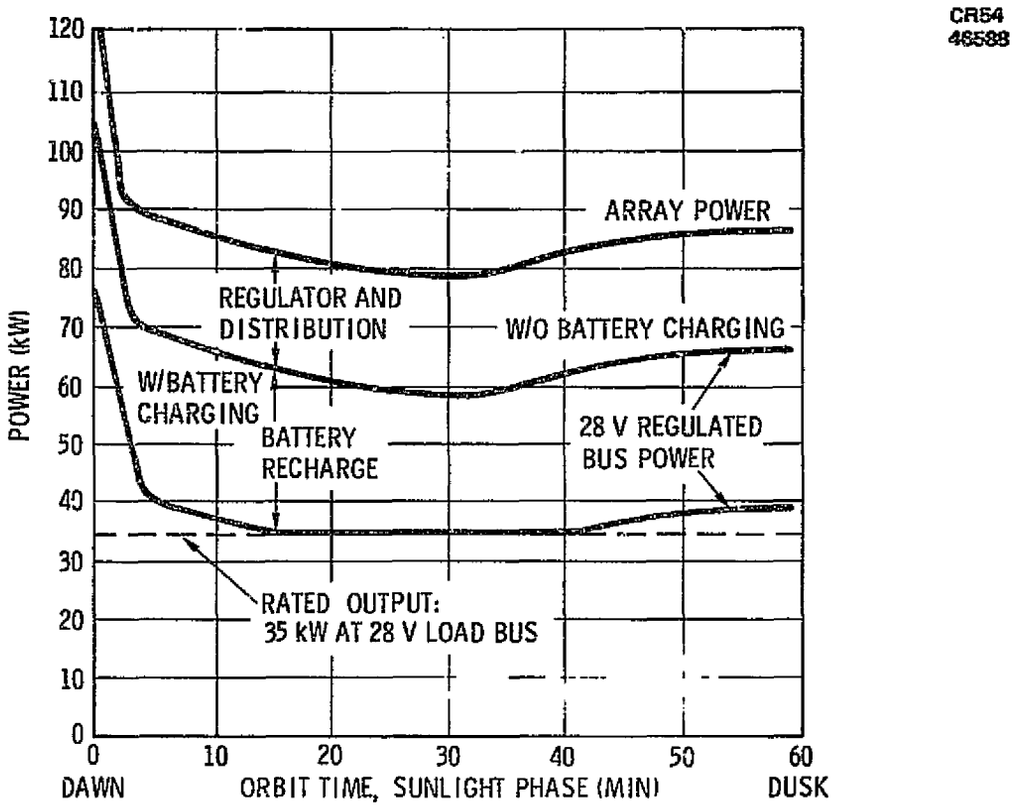

Figure 2-18. Array System Power Output

as the array cools from its warmest condition. The panel temperature used for sizing was 60°C. Regulator and distribution losses reduce the array output as shown. For peak loads, >60 kW could be provided for 58 minutes on a single pass. The increased battery Depth-of-Discharge (DOD) would be made up on subsequent orbits. In addition, the short very high peaks at dawn could possibly be used for particular payloads.

A further peaking capability is shown in Figure 2-19. The maximum β angle achieved as a function of orbit inclination shows that up to 64 kW regulated power could be used by proper scheduling. High peak power could also be delivered by using the batteries with the array output as shown, i.e., a peak of 80 kW could be provided for 35 minutes. These variable capabilities of the system may in fact, be used to satisfy much higher requirements if the system is used properly. This is important to avoid oversizing a system to satisfy the high power requirements that might be needed for short-term missions, i.e., development of Solar Power Satellite elements or communication systems.

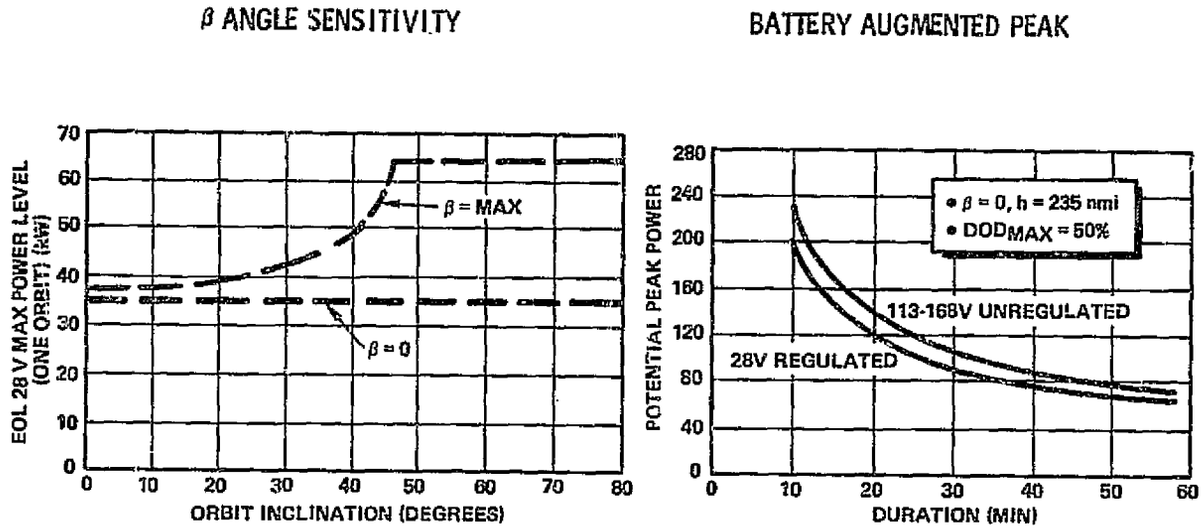

Figure 2-19. Intermittent Power Capability

2.3.2 Orbit Selection

The influence of user requirements on-orbit selection were discussed in Section 2.1. From a user standpoint alone, the specific inclination for a Power Module is indeterminate. There are potential user areas that would favor various portions of the spectrum from 28.5 degrees to sunsynchronous. As programs mature and are selected and scheduled, the user inferences will become more clear. There are no user preferences for altitude as long as g-level and environmental factors are met.

A summary of orbit inclination selection influences is shown in Figure 2-20. The summarized user requirements at the top are spread across the band. The potential to support geosynchronous bound missions in the role of construction, assembly, or logistics would require a 28.5 degree orbit. The scheduled sortie missions in the 10-77 STS Mission Model were reviewed as a potential indicator of the inclination areas of interest for future missions.

As seen, 159 (66 percent) of the missions are scheduled to be at 28.5 degrees, 30 (12 percent) at mid-inclination, and 52 (22 percent) in the polar

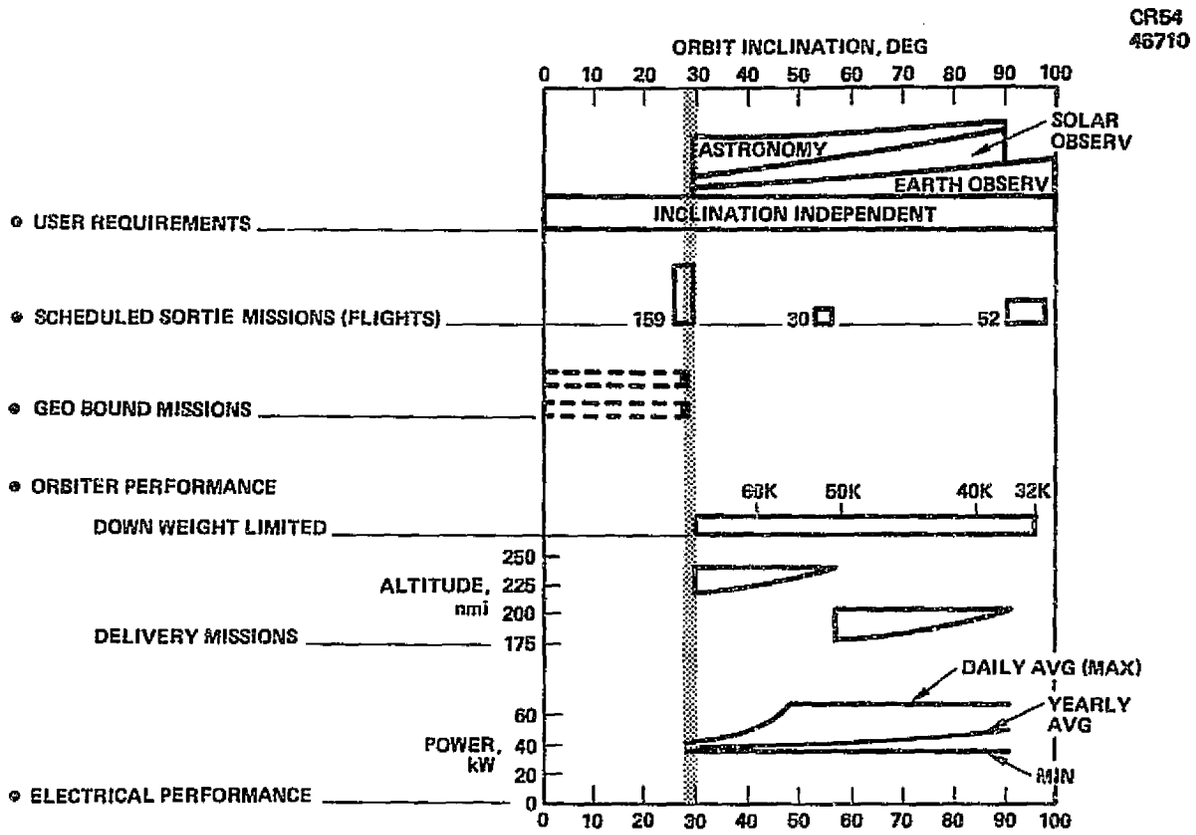

Figure 2-20. Orbit Inclination Selection

region. This would indicate that many missions are flown at 28.5 degrees to take advantage of maximum Orbiter performance and/or to be co-manifested with missions that do require 28.5 degrees.

Orbiter performance influence on inclination is not a factor for normal (32,000 lbs) down weight limited missions. For delivery (performance limited) missions, however, inclination does have an effect dependent upon altitude. At the altitude of interest (~220 to 235 nmi) the performance is decreased with increasing orbit inclination.

The electrical performance (power) is dependent on inclination in terms of maximum capabilities as shown. Based upon these considerations, it is felt that the Power Module should be designed capable of flying at any inclination from 28.5 degrees to sun synchronous. For reference purposes, 28.5 degrees was selected for this study because of the ability to accommodate the largest number of user areas, and to take advantage of the largest planned number of Orbiter flights and maximized Orbiter performance.

The orbit altitude selection factors considered are summarized in Figure 2-21. Orbit keeping propellant needed to maintain a given altitude is shown as a function of altitude for maximum and minimum solar activity periods. Below 215 nmi, the propellant expenditure begins to rapidly increase which would place contamination and logistics impositions on the system. Orbiter performance is reduced as the altitude is increased above 220 nmi. The maximum net delivered considering performance less orbit-keeping occurs at about 215 nmi.

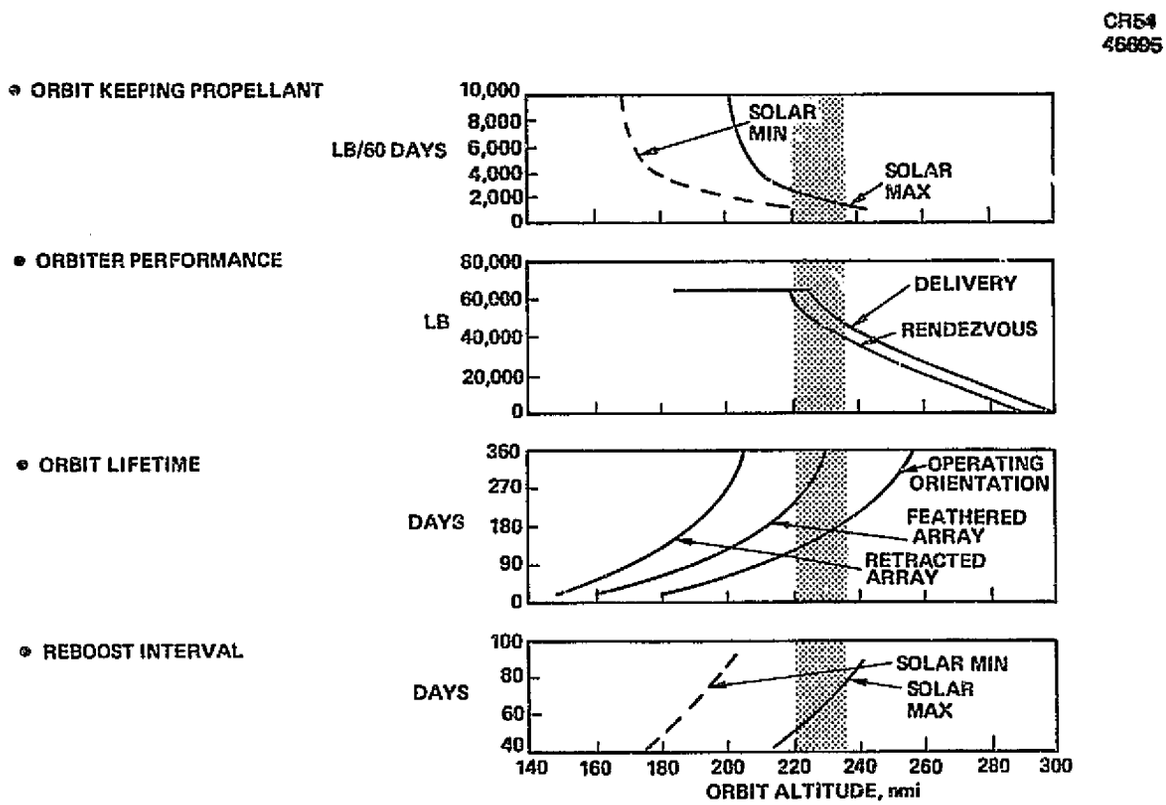

Figure 2-21. Orbit Altitude Selection

Orbit lifetime is a consideration from two aspects—time between reboosts and maximum life desired in the event of the logistics system (Orbiter) being unavailable for some period of time, say 6 months or a year. This would be a contingency mode and the Power Module could be operated in a minimum drag mode by feathering the array or possibly retracting it. For a 6-month contingency life, the lower limit on normal altitude excursion should be above 210 nmi; for a year, 230 nmi. A reboost capability of 15 to 20 nmi is

ORIGINAL PAGE IS
OF POOR QUALITY

compatible with the capability of candidate reboost systems. This would require reboost intervals as shown—a 235 nmi altitude would require a reboost interval of 80 days during solar maximum.

Based on these considerations, an operating altitude band between 220 and 235 nmi was selected. This would allow near full Orbiter performance capability and would require reboost about two to four times per year.

2.3.3 Reboost System Analysis

Candidate reboost techniques for the Power Module are illustrated in Figure 2-22. These include periodic reboost by the Orbiter itself using OMS or Reaction Control System (RCS), teleoperator delivered by Orbiter, or chemical or ion engine on-board systems. The Orbiter reboost capabilities are shown in Figure 2-23. The gimbal control cone of the OMS engines does not include the composite CG for reboost, thus, a pitch up moment must be counteracted. This would be supplied by the aft RCS (490 lbs propellant) for a total expenditure of 2,930 lbs. The acceleration level for a 100,000 lbs

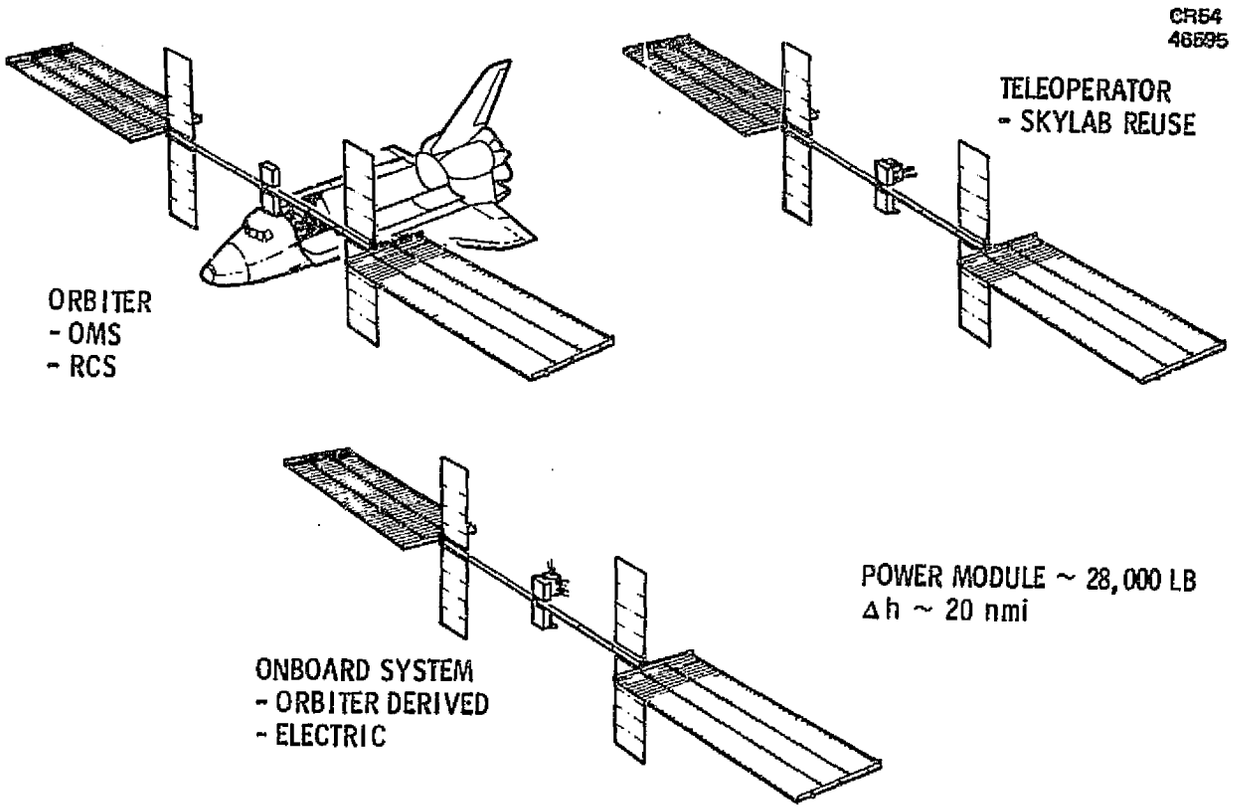

Figure 2-22. Power Module Reboost Concepts

CR54
46609

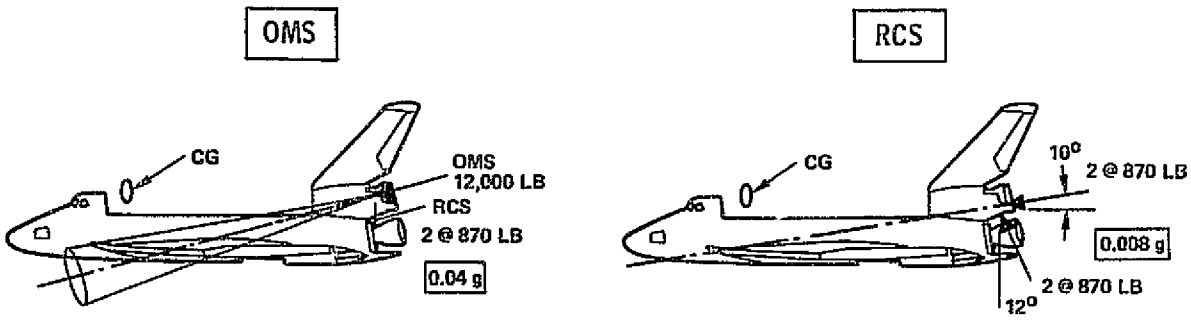

PROPELLANT		PROPELLANT	
OMS	(2440)	X	2700
AFT RCS	490	Z	685
	2930 LB		3385
ACCELERATION		ACCELERATION	
	0.04 g		0.008 g

Figure 2-23. Orbiter Reboost

Power Module with modules is 0.04 g. The Orbiter RCS has the same CG offset problem. The total propellant needed is 3,385 lbs of which about 20 percent is needed for moment control. The total of 3,385 lbs is beyond the RCS propellant available for payload use and would thus require the use of the 2,000 lbs available through the OMS crossover feed. Without this, the reboost capability would be limited to 8 nmi. The RCS imposed acceleration is low at 0.008 g.

The teleoperator designed for Skylab reuse could be used for Power Module reboost per Figure 2-24. It would be delivered to the vicinity of the Power Module by Orbiter, then it would rendezvous/dock with Power Module, reboost it, and return to Orbiter. The system weight is 5,963 lbs including payload bay support. It would require 9 feet of Orbiter payload bay reserved for teleoperator. The acceleration is low at 0.002 g.

An on-board propulsion system was defined for comparison purposes. It would weigh about 2,900 lbs to be adequate for two reboost cycles. It would

ORIGINAL PAGE IS
OF POOR QUALITY

CR54
46611

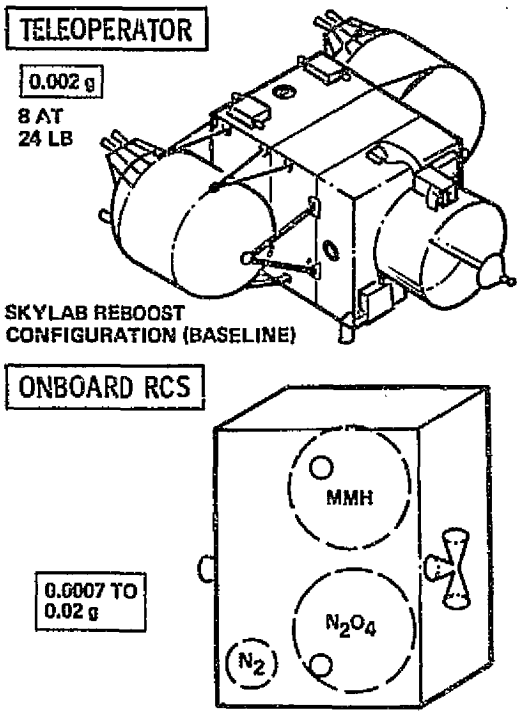

- TELEOPERATOR 2,115
  PROPELLANT 3,000
  SUPPORT EQUIPMENT 848
  } 5,963 LB
- REQUIRE 9 FT PAYLOAD BAY
- LOW ACCEL - 0.002 g

- LOW WEIGHT - 2,900 LB
- REQUIRES ORBITER BAY ENVELOPE
- PROVIDES CONTINGENCY REBOOST/DEBOOST
- PROVIDES CMG DESATURATION POTENTIAL
- COST INCREMENT ~ 3.5 M$

Figure 2-24. Added Reboost System

require about 5 feet of Orbiter payload bay length for refueling or replacement. There would be an added cost to the program—typically $3.5 million; however, the on-board system does provide some additional capabilities. It would provide a contingency reboost or deboost system should that be needed. It would also have the capability for contingency CMG desaturation or attitude control.

An Ion engine system was also analyzed. It would use the excess power (above rated value) generated for reboost. Three-thousand second Isp Kaufman engines were used in the analysis. Figure 2-25 shows the Power Module drag and the Ion engine thrust as a function of altitude. Crossover occurs such that full drag makeup could be made at the 235 nmi altitude selected at the beginning of the mission. At the end of 5 years, a 260 nmi altitude would be required because of the reduced array output. Ion engines may also produce an electrical charge on the system that would be undesirable.

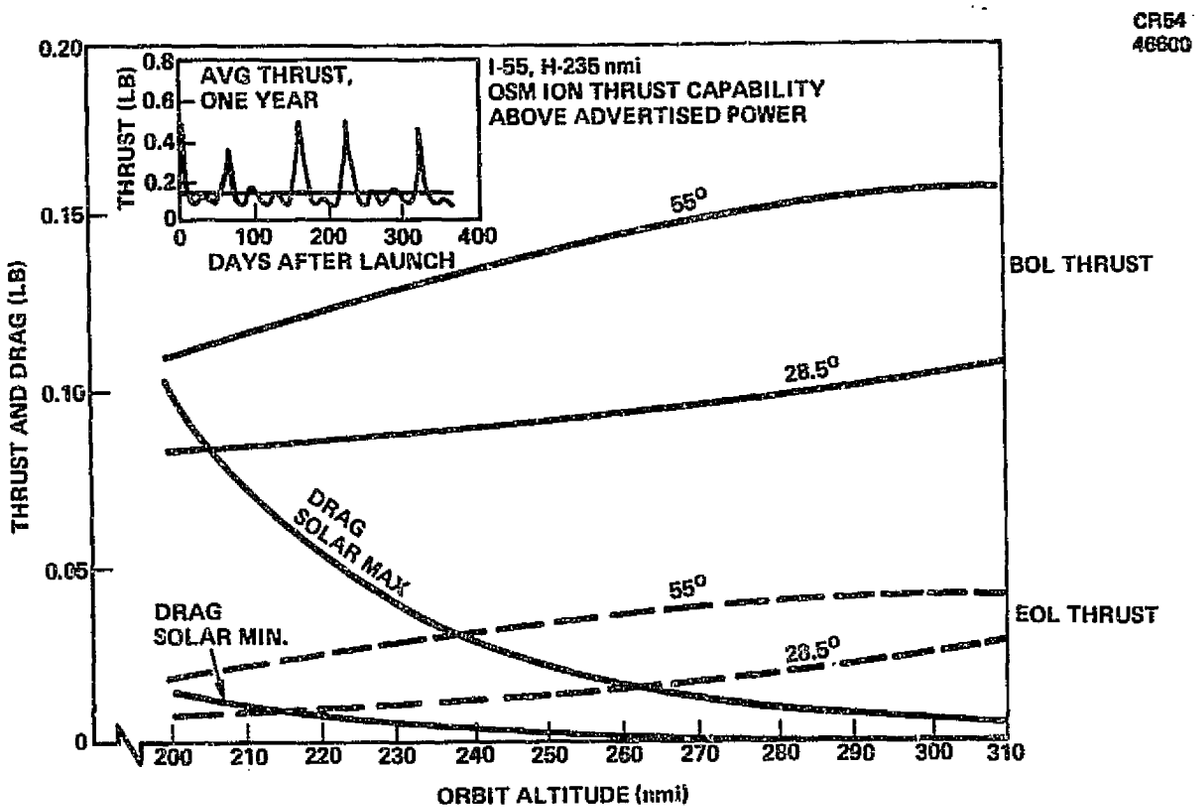

Figure 2-25. Ion Propulsion Capability

The reboost concepts are compared in Table 2-5. The Orbiter RCS technique was selected because of its low acceleration, low cost, and because it does not have a cost or payload bay penalty. It is recommended that a contingency reboost/deboost system be kept on-board the Power Module to preclude "Skylab" situations. A 2,200 lb solid motor would typically suffice. It is further recommended that future analyses weigh the potential incorporation of reboost, contingency reboost/deboost, desaturation, etc., functions, and determine the preferred solution.

Table 2-5. Reboost System Comparison

	Orbiter			On Board	
	OMS	RCS	Teleoperator	Chemical	Ion
System weight (lb)	2,930	3,385	5,115	2,900	1,000-5,000 lb
G-Level (g's)	0.04	0.008	0.002	0.001 to 0.01	~0
Payload bay penalty	-	-	848 lb 9-ft length	400 lb ~5-ft length	neg
Power	-	-	-	-	BOL-peak power EOL-peak power plus 2.5 kW
ΔCost	-	-	TBD	~3.5 M$	~7 M$

ORIGINAL PAGE IS
OF POOR QUALITY

ORIGINAL PAGE IS
OF POOR QUALITY

Section 3
OSM CONCEPTS

To meet the primary objective of the Orbital Service Module (OSM) program, to economically enhance low-earth orbit operations in terms of increased energy and services, several OSM concepts have been identified and are shown in Figure 3-1. This evolutionary program will (1) provide an increasing level of utilities service to incrementally match capability to evolving user needs, and (2) offer alternative capabilities that are responsive to variations in users' requirements.

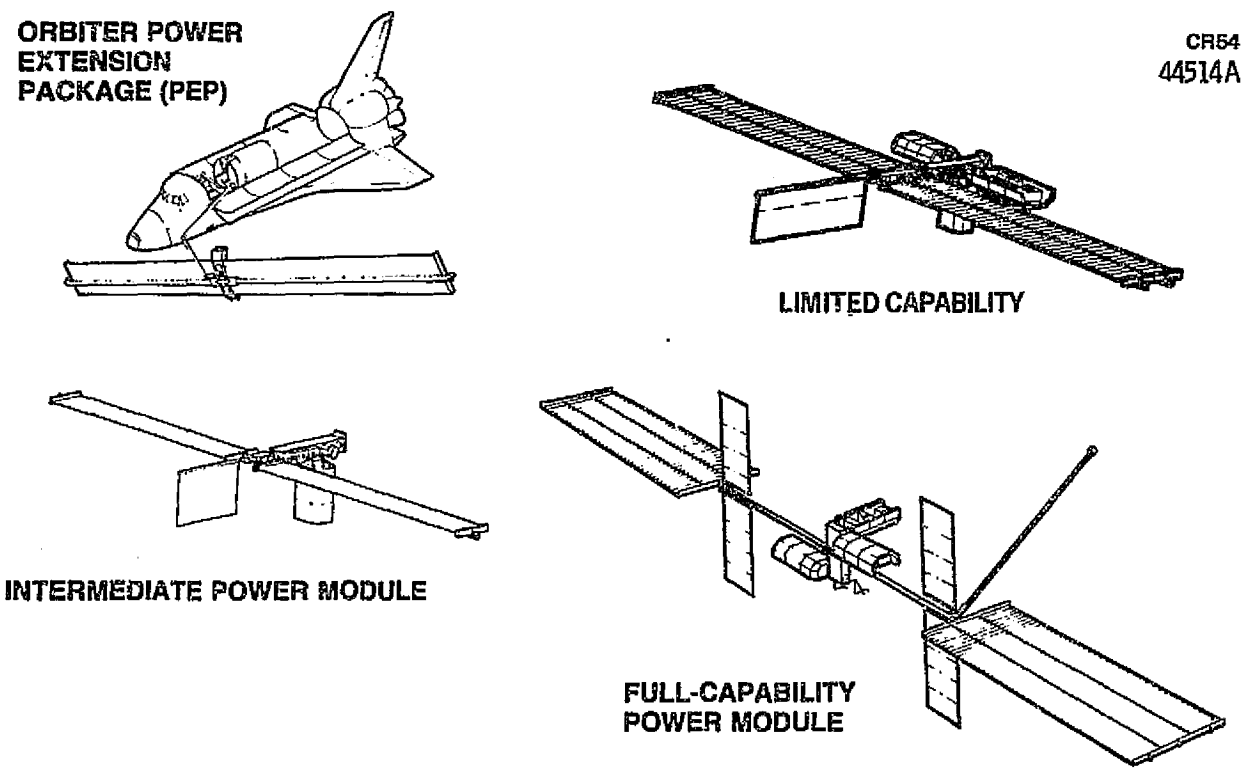

Figure 3-1. Orbital Service Module Program

The Orbiter baseline configuration offers a great operational flexibility. Many of NASA's future programs depend upon the capability to provide services beyond that of a conventional launch vehicle. Therefore, the OSM program will initially assure good balance in the use of flexibility in providing payload services such as delivery and return weights, power, duration,

PRECEDING PAGE BLANK NOT FILMED

cooling, attitude control, and orbit location. Therefore, the first step in the OSM program is an Orbiter power improvement, the Power Extension Package (PEP). This step also develops major components of later orbitally stored systems: primarily solar arrays and power conditioning and distribution equipment.

The figure also indicates other possible growth steps beyond the initial PEP. The Intermediate Power Module essentially would be a free-flying PEP array intended primarily for support of single large (or multiple small) application modules. The Limited Capability Power Module and the Full-Capability Power Module employ multiple PEP solar array wings and support multiple free-flying applications modules as well as a berthed Orbiter-Spacelab mission.

In this manner, the OSM study has (1) defined a system which, in a constrained budget environment, provides the enhanced capability for near-term missions while providing capability of growing to satisfy future requirements, and (2) addressed critical technical issues to establish feasibility and a sound basis for cost and schedule predictions.

3.1 PEP DESIGN DEFINITION

3.1.1 Background of PEP Design

The concept of an Orbiter carried solar array that would be both deployed and continuously supported by the Orbiter Remote Manipulator System (RMS) during a mission was originated and studied at the Johnson Space Center (JSC) in the Fall and Winter of 1977. The PEP design described in this section is an expanded definition of this original design concept.

A number of design areas requiring further investigation were identified by JSC in this original study. Typical examples include:

A. The original study indicated that RMS loading was within design limits when the Orbiter was controlled with the Vernier Reaction Control System (VRCS) but would exceed allowable RMS braking torques using primary RCS control. In this condition the RMS joints would back-drive resulting in uncontrollable array motion. While the VRCS is the standard

control mode for attitude hold, this system does not have redundant thrusters and the primary RCS is to be employed as backup to the VRCS. Additionally, attitude maneuvers require an inordinate time if primary RCS cannot be used to initiate rotation. For these reasons, there is a strong need for the PEP system to be compatible with use of the Orbiter Primary RCS. A structural design concept has been selected in the study that permits limited but adequate use of the RCS. The feasibility of using both VRCS and RCS with an RMS-mounted array has been verified.

B. Integration of PEP with the RMS also requires carrying high current (200 amps) down the full manipulator length and across its six rotating joints. Development of a wire harness packaging concept that would allow the RMS to support PEP, and also retain its ability to deploy or retrieve payloads without requiring removal of the PEP harness, was in important design objective. This design problem was investigated by SPAR, of Canada, under subcontract to McDonnell Douglas Astronautics Company (MDAC). A workable solution was devised which meets the objectives originally established by JSC.

C. Another potential problem area identified by the JSC study concerned physical integration of the PEP system into the Orbiter/Spacelab combination when the short tunnel is employed. In this configuration, little free volume is available forward of the Spacelab module, and mounting PEP equipment aft of this module would infringe upon the available payload volume. Many arrangements, of varying degrees of complexity, were investigated to solve this dilemma before the design solution presented in this report was adopted. The design concept (shown in Figure 3-2), was suggested by J. C. Jones of JSC; it not only fits over the baseline Spacelab short tunnel (right angle joggle), but is also compatible with an alternate design (straight diagonal) currently under consideration.

3.1.2 PEP Design Drivers and Interfaces

Based upon the mission analysis and requirements definition presented in Section 2, the initial PEP should provide 29 kW of which 15 kW should be available to the payload. The package should be designed to accommodate mission durations of 19 to 21 days, be capable of multiple orientations, and be predicated upon existing technology. This suggests the use of solar array technology developed under the Solar Electric Propulsion programs (SEP), and the technology of existing Orbiter systems, insofar as possible. The RMS offers

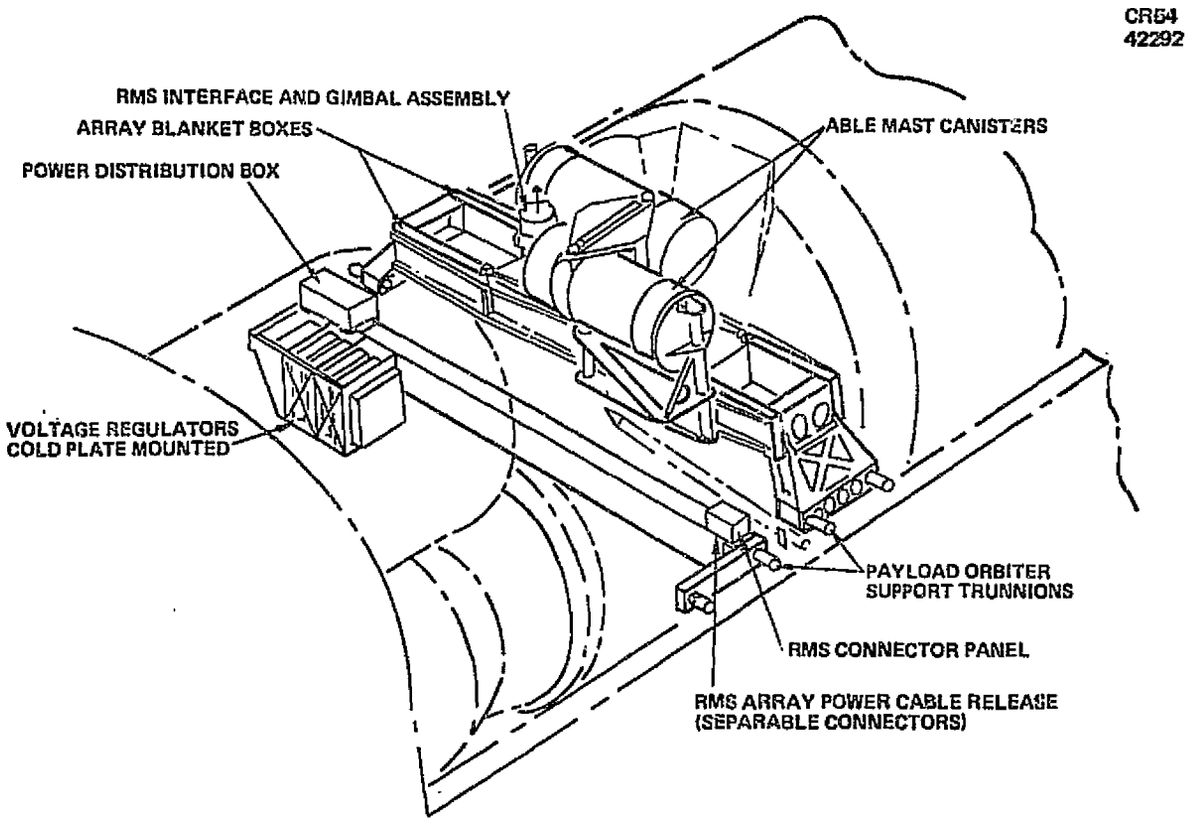

Figure 3-2. Power Extension Package (PEP) Design Concept

a highly flexible means for development and positioning of the solar arrays. Figure 3-3 portrays the concept that meets these requirements.

Table 3-1 summarizes the baseline characteristics of the initial PEP concept. In the PEP concept, the solar arrays provide most of the power (26 kW) while the Orbiter is in the sun, and the standard Orbiter fuel cells provide all of the power on the shadeside of the orbit. The fuel cells (three are currently used to provide electrical power to the payloads) idle at 3 kW (1 kW each) during the sunside operation, as shown in Figure 3-4; the combination of solar arrays and fuel cells provide a continuous capability of 29 kW.

The design drivers for this PEP concept, used in conjunction with the Orbiter capabilities, are listed in Table 3-2. An all orientation stabilization capability is required as is a multiple orbit (inclination and altitude) requirement to satisfy the communications, earth and solar observations and astronomy users. The interfaces of PEP with various Orbiter subsystems, hardware and operations are of major importance in minimizing both orbiter scar weight and PEP development and operational cost.

ORIGINAL PAGE IS
OF POOR QUALITY

CR54
44209

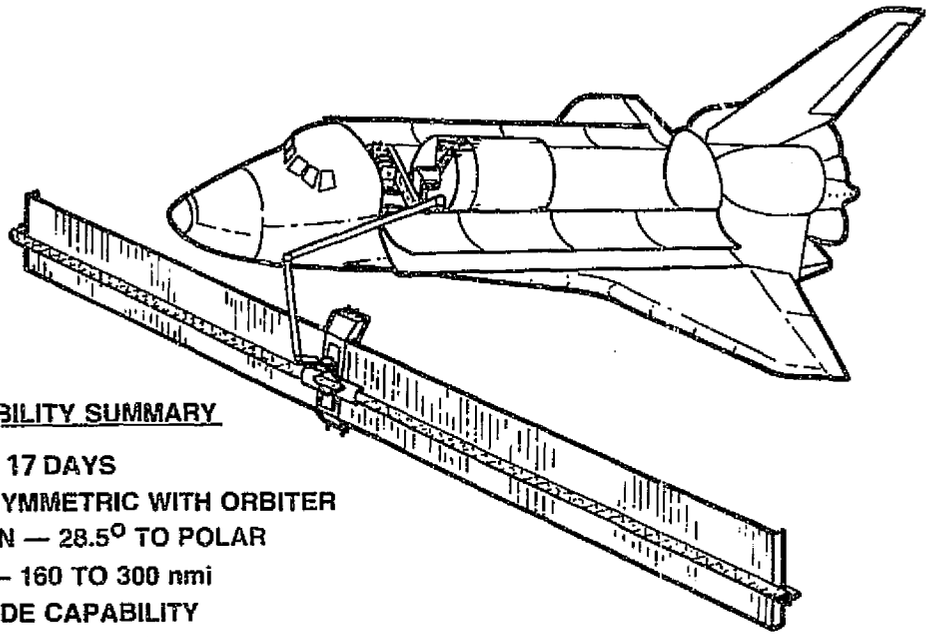

CAPABILITY SUMMARY

29 kW, > 17 DAYS
- THERMAL-SYMMETRIC WITH ORBITER
- INCLINATION — 28.5° TO POLAR
- ALTITUDE — 160 TO 300 nmi
- ALL ATTITUDE CAPABILITY
- OPERATION — 1981 ON
- WEIGHT: 2,094 LB

Figure 3-3. Power Extension Package (PEP)

Table 3-1. PEP Baseline Characteristics

Power and duration:	29 kW, 17 days 21 kW, 19 days
Array size:	Two SEP-type wings, 4.0 meters x 36.3 meters each
Storage location:	Over Spacelab short or long tunnel standard Orbiter attachment aft location optional
Deployment:	Remote manipulator system (RMS)
Array rotation:	Separate gimbal/torquer drive RMS inactive except during Orbiter maneuvers
Weight:	2,094 lb
Heat rejection:	Uses Orbiter radiators flash evaporator supplement - some orientations
Output voltage:	Per Orbiter specs

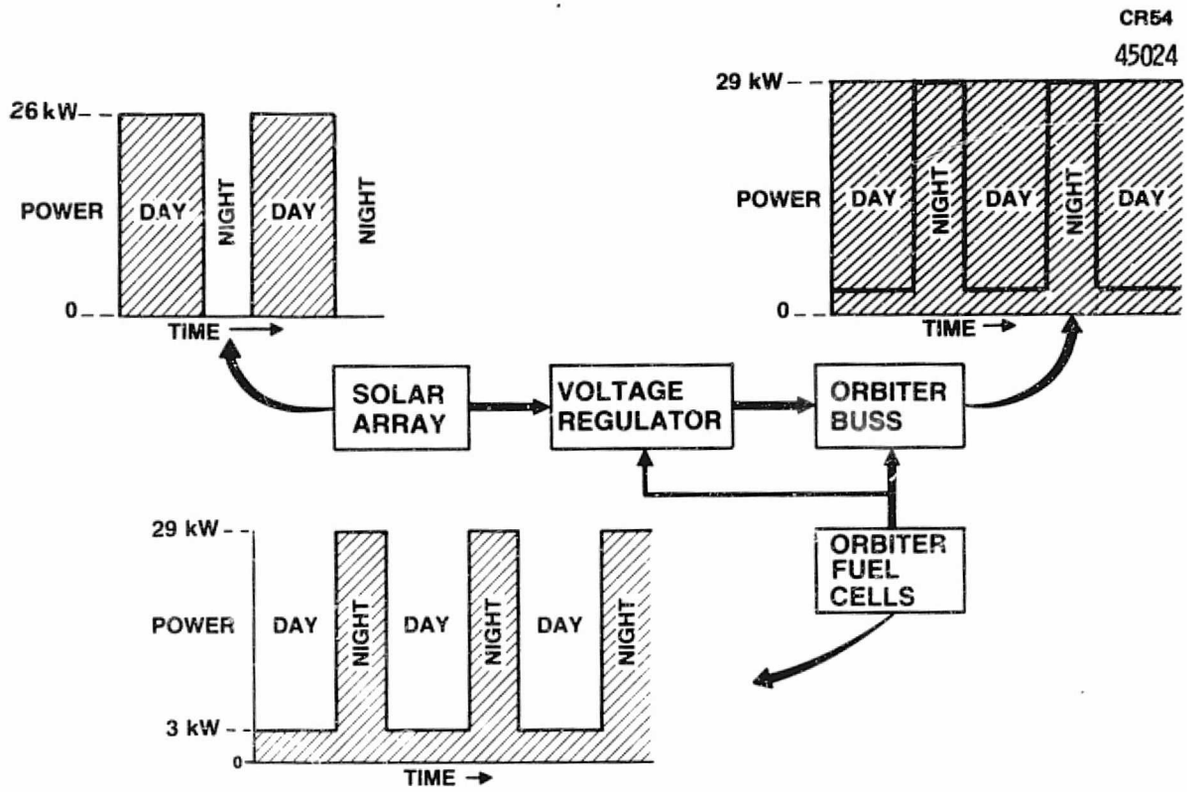

Figure 3-4. Load Sharing

Table 3-2. PEP Design Drivers

- Power level: 29 kW total, 15 kW to payload
- Mission durations: 19-21 days nominal
- Multiple orientations
- Use of RMS for deployment and orientation
- Commonality with SEP and OSM power module
- Existing interfaces:
  - Stowage attachments/volume
  - Fuel cell voltage/power characteristics
  - Orbiter/Spacelab power distribution
  - Orbiter heat rejection constraints
  - RMS load capacity; structural dynamics
  - Orbiter RCS loads

Figure 3-5 portrays the major elements of PEP interface with the RMS and the Orbiter. The PEP kit stowage in the Orbiter cargo bay results in no loss of available payload volume. The package easily fits into the forward area between the airlock and the Spacelab as shown. The two-mast canister for deploying the arrays and the two-blanket boxes are shown in the stowed position in the lower right of Figure 3-5. The linkages are designated to rotate the canisters 90 degrees when the mast begins to emerge. The array module and the equipment support beam may be easily removed from the Orbiter when they are not needed for a mission or for maintenance. Array power cables from the RMS terminate at the voltage regulators. The regulator outputs go directly to the power distribution box. The sketch indicates the routing of cables from the power distribution box and the downstream junction box interface. The junction box is located at Station 660 and is installed in line with existing Orbiter and payload power cables. The RMS connection to the solar array is made through a standard grapple connection over the two-axis gimbal system of the array. In the lower left and center of Figure 3-5, the array is shown in the deployed position with the two extendable masts deployed from their initial storage canisters.

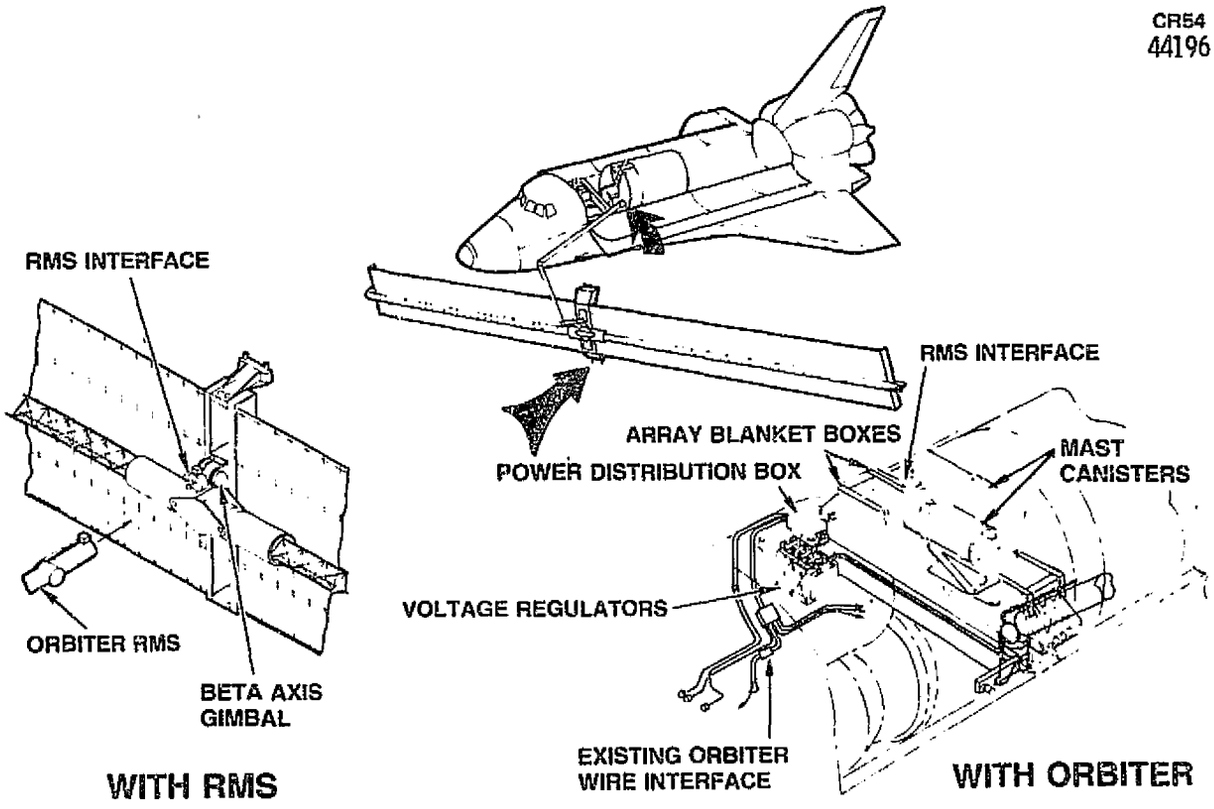

Figure 3-5. PEP Interface

3.1.3 PEP System Features

The PEP system features are summarized in Table 3-3.

Table 3-3. PEP System Features

- SEP technology solar array
- Multiple storage locations
- Standard RMS utilization – with cable kit
- Independent two-axis, gimbal control
- Array dynamic loads compatible with RMS capabilities
- Versatility of missions and Orbiter/array orientations
- Ground operations compatible with Orbiter turnaround
- System interfaces produce minimum scar

3.1.3.1 Array

One wing of the PEP array is shown in Figure 3-6. Each wing of the array is 4-meters-wide and 36.3-meters-long, identical to the SEP array but longer (36.3 meters versus 31 meters) in order to generate the higher power capability required for the PEP missions. The type of cell used, number of cells connected in series (306) and other details of assembly and construction of the PEP are the same as used for the SEP. The use of the SEP technology will result in reduced development cost and schedule risk for the PEP mission. The PEP array has been designed to deliver 26 kW of power at 28 volts to the Orbiter bus.

3.1.3.2 Multiple Storage Locations

In addition to mounting the PEP kit in the forward location in the volume between the airlock and the Spacelab module, the PEP can be used with Spacelab pallets, as shown in Figure 3-7. The equipment support beam with the power distribution box and voltage regulators would normally be mounted in the forward location to minimize scar weight and standardize the Orbiter interface, but the solar array assembly can be mounted at any fore and aft location in the bay which can accommodate payload support trunnion. Should the center of gravity (CG) control or other reasons so require, the equipment support beam with the associated power distribution and voltage regulation gear also can be located elsewhere, by providing a supplemental wiring to the Orbiter bus and payload junction box.

ORIGINAL PAGE IS
OF POOR QUALITY

CR64
44092

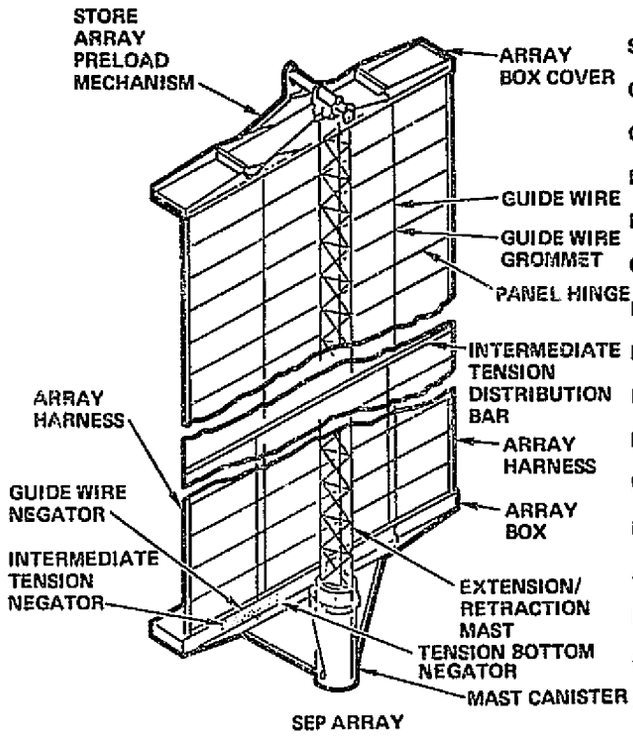

Si CELL THICKNESS (mil)	8 mil	8 mil
CELL SIZE (cm)	2 X 4	2 X 4
CELL EFFICIENCY (%)	12.9	11.4
NUMBER OF CELLS PER PANEL	3060	3060
NUMBER OF CELLS IN SERIES	306	306
COVER THICKNESS (mil)	6	6
KAPTON SUBSTRATE THICKNESS	1/2 mil	1/2 mil
BLANKET HARNESS TYPE	A1	A1
INTERCONNECTS	WELDED	WELDED
PANEL SIZE (m)	0.756X4	0.756X4
WING SIZE (m)	4X36.3	4X31
NO. PANELS/WING	48	41
AREA/WING (m^2)	145	124
BLANKET AND HARNESS MASS (kg)	138	118
OUTPUT OF WING (kW)	15.5	12.5
SPECIFIC MASS (kg/m^2)	0.95	0.95

Figure 3-6. PEP Utilizes Existing SEP Technology Base

CR64
46565

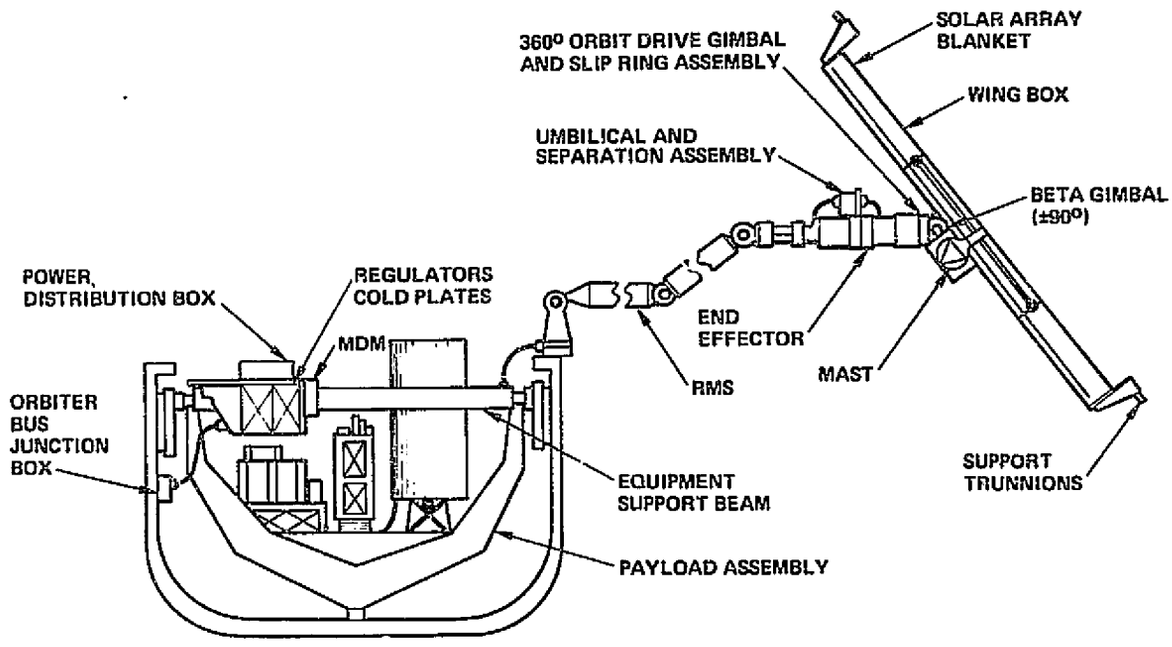

Figure 3-7. PEP System Configuration

3.1.3.3 Standard RMS Utilization

The PEP solar array is deployed and positioned by the RMS. The RMS is moved from its stowed position and attaches to the standard grapple fixture located on the gimbal system of the array, as shown in Figure 3-8. The attach fixtures on the Orbiter are released and the array support fixture and equipment beam is lifted vertically out of the cargo bay. It is translated to the deployment position, deployed under visual monitoring, and translated to its operational position. The transfer of electrical power from the array to the Orbiter is accomplished through a power cable attached to the outside of

CR54
41819

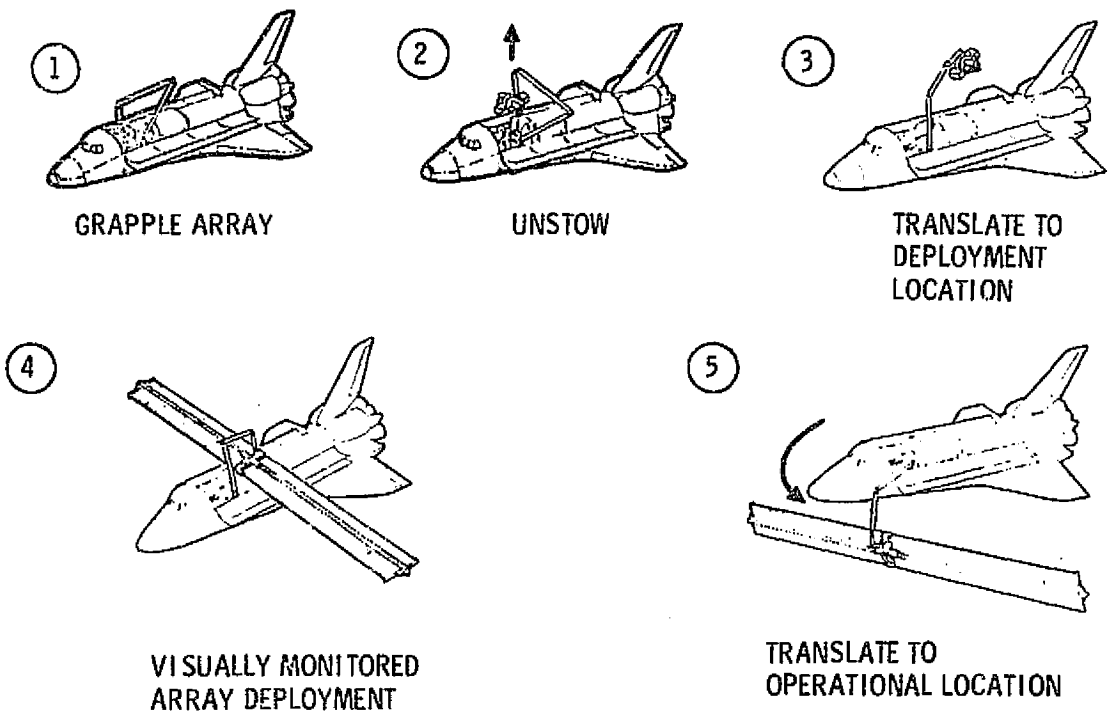

Figure 3-8. Deployment Sequence

the RMS arm. Existing spare RMS wires are used to carry signals for array positioning and controls across the end effector interface to the control electronics equipment, mounted on the top of the array support fixture, via slip rings in the PEP orbit drive gimbal and by a flexible cable across the hinge gimbal.

3.1.3.4 Two-Axis Gimbal Control

In addition to the 360 degree orbit drive gimbal mentioned above, a ±90 degree

beta angle gimbal is provided, thus giving the PEP system independent two-axis gimbal control, as shown in Figure 3-7.

3.1.3.5 Stabilization and Control with RCS

Both the vernier and primary RCS thrustor groups can be utilized in control of the orbiting vehicle with PEP as noted in Table 3-4 and discussed below. The Orbiter stabilization and control electronics will be used to drive the RCS. The low frequency structural isolation reduces the dynamic loading on both the array masts and the brakes in the RMS joints.

Table 3-4. PEP Stabilization and Control Utilizing Orbiter RCS

RCS Vernier thrustors	RCS Primary thrustors

• Attitude hold
  • Primary mode
  • Good propellant economy
  • Small reaction loads
  • Plume impingement
  • Loads generally small
  • Direct impingement at 10 meters distance requires low limit cycle rates
	• Attitude hold
	  • Back-up mode
	  • Poor propellant economy
	  • Permissible reaction loads
	  • Plume impingement
	  • Excessive loads
	  • Existing thrustor inhibit software used to prevent plume loads

• Attitude maneuvers
  • Primary mode
  • Applicable when S/A <u>not</u> on bottom side of or biter
  • Plume loads generally excessive when S/A on bottom sice of orbiter
	• Attitude maneuvers
	  • Primary mode
	  • Applicable with S/A in any location/orientation with thrustor inhibit

<u>Both systems utilize</u> • Orbiter attitude and DAP systems • S/A structural dynamic isolation about S/A major axes above 0.02 Hz frequency	

S/A = solar array

The RCS verniers are preferred for operation in the attitude hold mode because of their superior propellant economy and small dynamic reaction loading. Four of the six vernier thrustors direct their plumes downward from the Orbiter, thus plume impingement will occur on the array in this mode when the array is located at the bottom side of the Orbiter. The plumes induced moments will be acceptable when in the attitude control mode, however, these moments would become unacceptably large if attitude maneuvers are performed while the arrays are located at the bottom side.

The RCS primary thrustors are considered as back-up to the verniers because of their higher propellant consumption. This capability is necessary because of the nonredundant nature of the vernier system. Since direct plume forces in attitude hold with the primary RCS thrustors is excessive, this is avoided by utilizing the highly redundant nature of the appropriate thrustors. This same technique is used to effect attitude maneuvers regardless of solar array location and orientation. Limiting case calculations made by MDAC and simulation runs conducted by SPAR have indicated that the array dynamic loads under these conditions are within the RMS capabilities for the variety of Orbiter/array orientations necessary to satisfy the versatile mission requirements.

3.1.3.6 Ground Operations

Operations flows at the launch side for both the first flight and for the subsequent turnarounds of the PEP have been developed by MDAC and KSC. The PEP processing timelines show that PEP turnaround activities fall into the Orbiter turnaround assessment times, per STAR 14, without impact. Throughout the design approach to PEP, emphasis has been placed on developing a Shuttle system interface that minimizes the Orbiter scar weight and PEP system cost.

3.1.4 Subsystem Description, Major Trade-offs and Analysis

3.1.4.1 Electrical Power System

Requirements and Constraints

The EPS is required to provide 29 kW average power to the load buses and to have minimum design modifications and scar weight additions to the Orbiter. Operating voltage of the solar array must be relatively high to minimize losses in the power transfer cables, with the upper limit being set by voltage regulator design considerations.

The RMS power transfer cables are required to provide good flexibility to not restrict or inhibit the rotations and translations of the RMS. The maximum cable size used to distribute the lower voltage regulated power is "0" gage. This is the largest size cable qualified for use in the Orbiter power distribution system.

During daylight operation, the Electrical Power System (EPS) and the Orbiter fuel cells operate in parallel and share load based on their current-voltage characteristics. To keep fuel cell reactant consumption to a minimum, the fuel cells must operate at low current levels.

System Description

The PEP EPS consists of the solar array, RMS power transfer cables, voltage regulators, distribution box, and distribution cables. The block diagram of the system is shown in Figure 3-9 and gives the power ratings, operating efficiencies, and voltages of the major components.

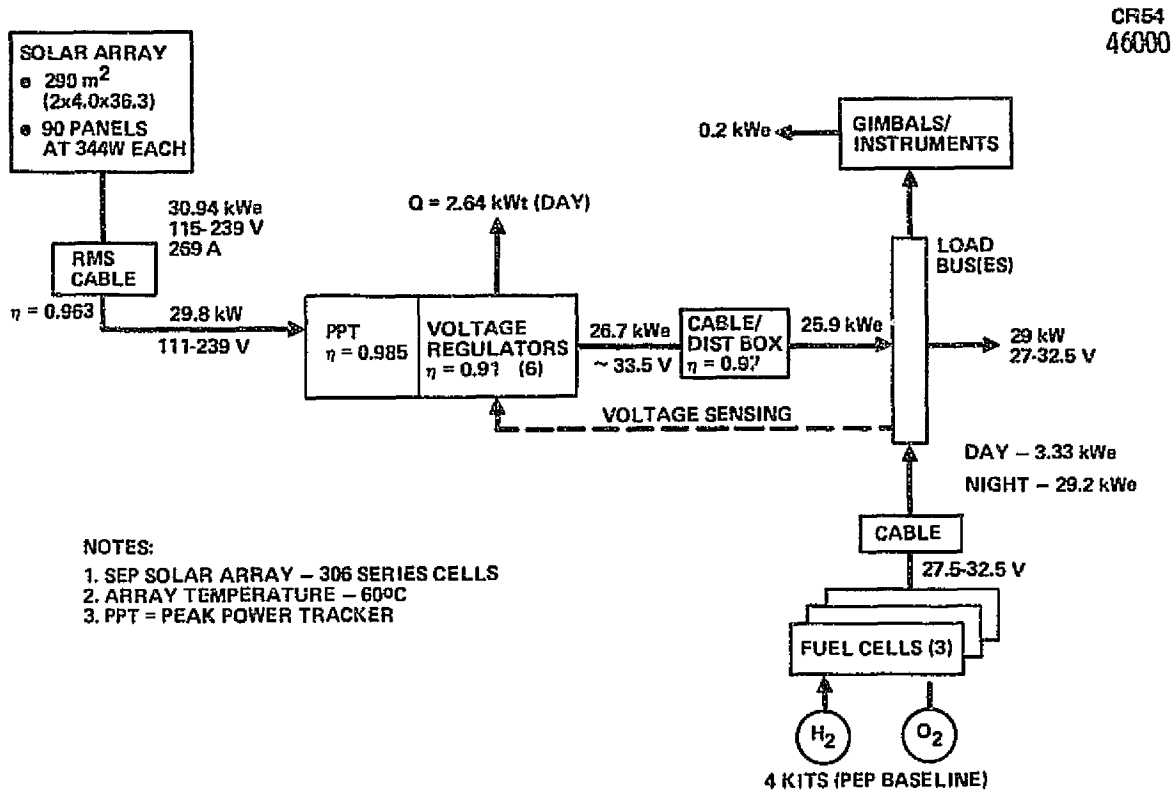

Figure 3-9. PEP Electrical Power System

The solar array, which uses SEP array technology and panel size, (see Figure 3-6) consists of two wings 4-meters-wide by 36.3-meters-long. The SEP array has been developed to the technology readiness state and utilizes 2 x 4 cm Si cells, 8 mils thick with a 6 mil cover glass. Each SEP panel is 0.756 m x 4 m and has a total of 3,060 cells. The PEP array is identical to the SEP array but is longer (36.3 m versus 31 m) in order to meet the higher power capability required for the PEP missions. The array has an output of 30.94 kW at 115 V and operating temperature of 60° C.

Voltage regulation for the PEP is accomplished by the use of six identical pulse-width-modulated regulators that are capable of parallel operation as required to supply the Orbiter buses and Spacelab loads. Regulator output voltage is held to within a 0.25-V band at remotely sensed regulation points for the purpose of load sharing with the Orbiter fuel cells.

A schematic diagram showing how the PEP power distribution system interfaces with and integrates into the Orbiter is shown in Figure 3-10. The PEP system is nominally rated to provide 29 kW average power to the load buses with the fuel cells providing approximately 3 kW in the daytime and supplying the entire load at night.

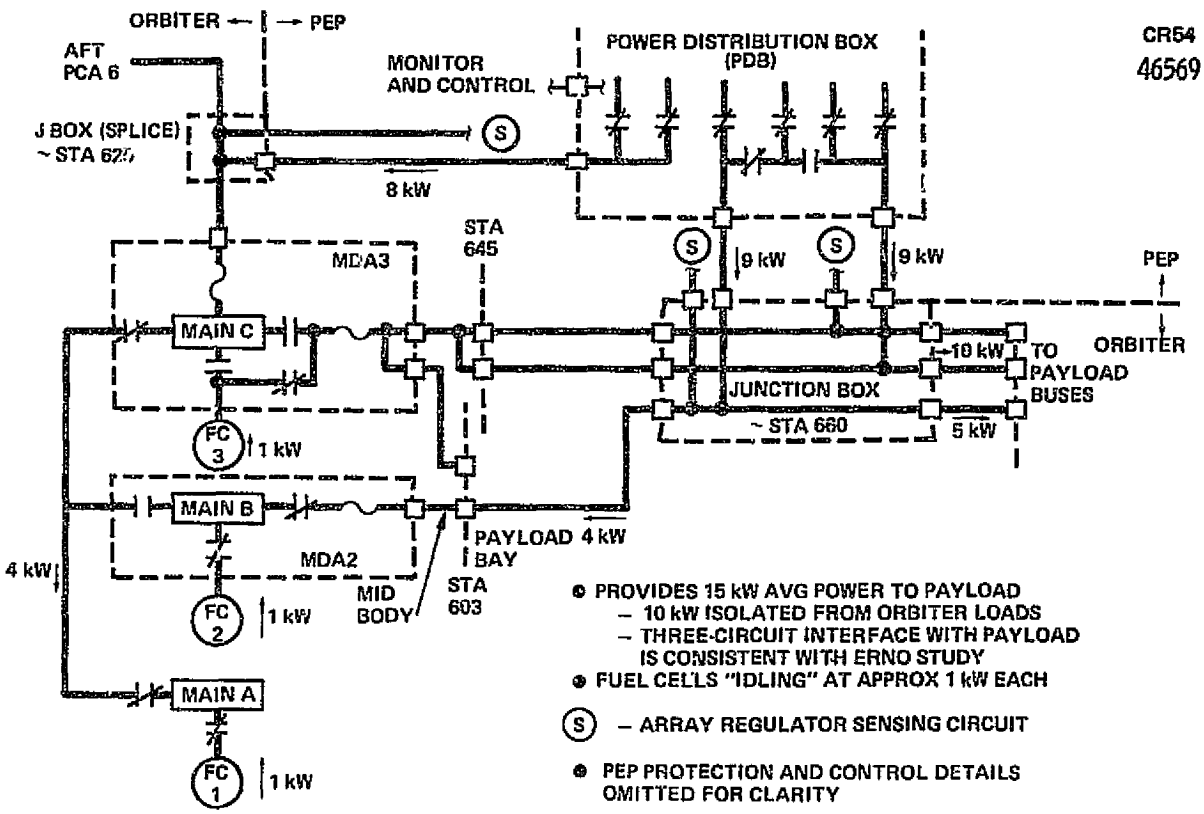

Figure 3-10. Power Distribution System With PEP (Daytime)

ORIGINAL PAGE IS OF POOR QUALITY

Major Trade Options

Trades performed to establish the baseline EPS included: (1) array operating voltage, (2) RMS power cable sizing, (3) fuel cell operation in daytime, and (4) isolation of payloads from Orbiter loads.

Trade Factors and Decisions

Array Operating Voltage—Series cell strings of 306, 374, and 510 cells on the panel (0.756 m x 4 m) were investigated. The corresponding array voltages are 115.2, 141.0 and 182.7 volts.

The 306 cell series string operating at 115.2 V was selected because (1) it results in early availability and low cost because it is identical to the SEP array design, and (2) the 115.2 V allows the PEP voltage regulators to operate more efficiently resulting in minimum heat rejection to the Orbiter thermal control system.

RMS Power Cable Sizing – The RMS power cables are sized to minimize cable I^2R losses consistent with the need to achieve a good balance between cable weight, size, and flexibility. Trades were performed to evaluate the use of No. 8, No. 6 and No. 4 gage conductors. The No. 6 gage was selected as best meeting the above criteria.

The use of the larger No. 4 gage would be attractive from the standpoint of reduced I^2R losses. For every 100 watts saved in cable I^2R losses, approximately $18,000 is saved in solar array cost. The No. 4 gage conductor offers the potential of saving approximately $70,000 in array cost. However, the relative weight penalty in terms of pounds added per watt saved increases significantly. In addition, the increased size and stiffness may potentially interfere with RMS wrist roll freedom. Additional studies should be performed to determine and verify cable flexibility and size requirements for the RMS application.

Fuel Cell Operation in Daytime – The fuel cells must either be switched off line during the daytime or operate at a controlled minimum (idle) load while in parallel with the solar array voltage regulators. The paralleling approach is selected because of the advantages in system simplicity, reliability, voltage regulation, and reduced array size. Nominally, one fuel cell is in parallel with each of the three bus sections in the PEP power distribution box as indicated previously in Figure 3-10.

System voltage regulation/load sharing performance is presented in Figure 3-11. Typically, a new fuel cell at 32.25 volts will deliver 40 amps (1.29 kW). An old fuel cell at 32.5 volts will deliver 26 amps (0.85 kW). A representative value for mission planning purposes is approximately 1.07 kW per fuel cell. The voltage regulators will supply the balance of the load up to the array capability within the regulation band of 32.25 to 32.5 volts.

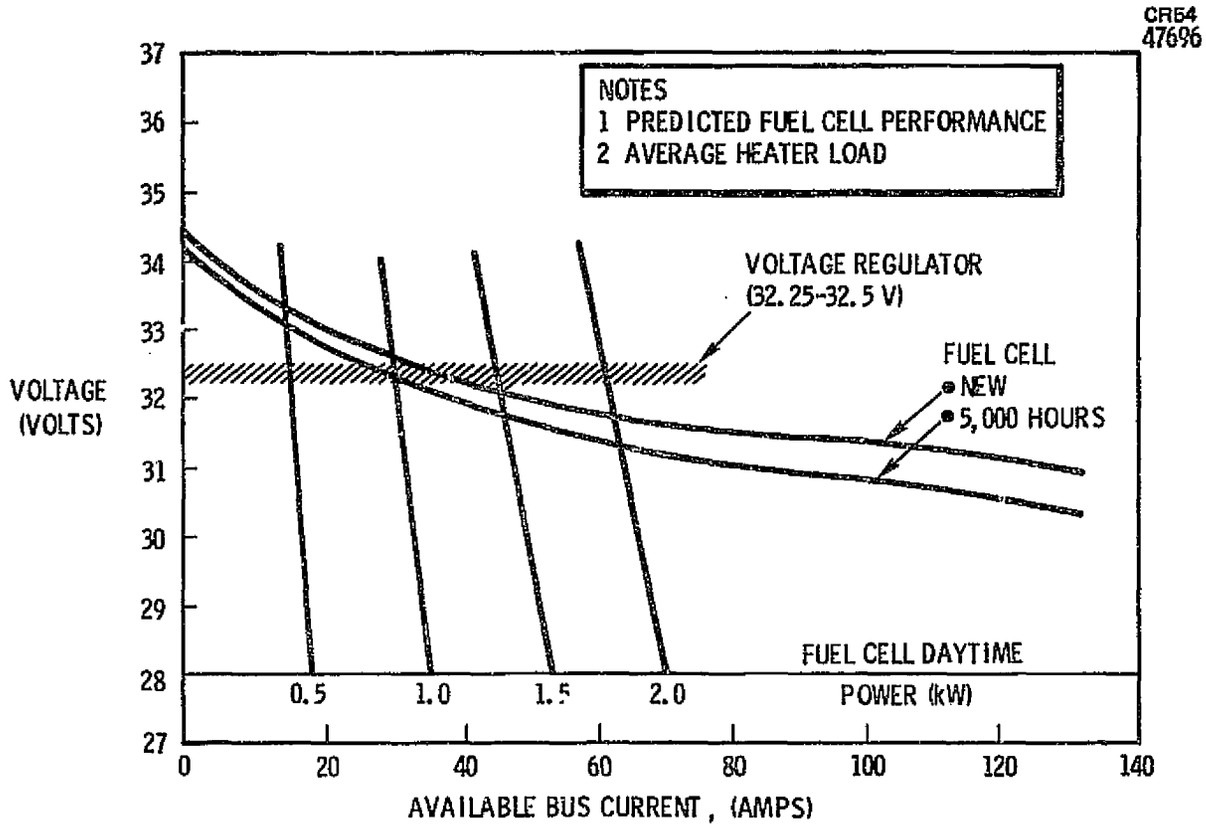

Figure 3-11. PEP and Orbiter Fuel Cell Voltage Regulation/Load Shaking

The regulator is also required to track the array peak power point during: (1) the sunrise and sunset transients; (2) periods when the array is at > 60° C temperature; peak power tracker inefficiencies do not result in regulator heat rejection. Each of the six regulators is supplied by its own solar array section and is required to have a capacity of 150 amps, allowing a margin over the required 134 amps. An adaptation of the NASA Standard Power Regulator Unit (SPRU), modified to operate at the higher input voltages of the PEP solar array (up to 239 V) has been used as a typical regulator concept for PEP study purposes.

Consideration has been given to regulator failure modes that could result in high voltage being impressed on the Orbiter buses and means for limiting any overvoltage to within the envelopes specified in Rockwell requirements document MF0004-002. A transformer coupled regulator approach may offer some benefit in Orbiter overvoltage protection, as contrasted to pulse width modulated regulators (e.g., SPRU and the MSFC Programmable Power Processor) at the expense of array and regulator cost and efficiency (111 V in; 33.5 V out), and perhaps prohibitive heat rejection.

The voltage regulator settings (32.25-32.5 V nominal) can be made on the ground between flights. Each of the three fuel cells will contribute current and consume cryogenics in accordance with its voltage/current characteristic in conjunction with the set point of the associated PEP regulators. Mission duration performance predictions should be relatively accurate. In-flight adjustment capability for the PEP regulators may be desirable.

Isolation of Payload Power—As referenced in ICD-2-05301, and the Spacelab Accommodations Handbook, the baseline Orbiter power system is normally configured to supply the Spacelab experiment main direct current (DC) bus from a dedicated fuel cell. With PEP, payload power available from the solar array exceeds the capability of a single fuel cell. A minimum of two fuel cells must be utilized during dark side operations to meet payload requirements.

The selected scheme utilizes Fuel Cell No. 3 in a dedicated mode to supply a nominal 10 kW to the experiment main bus over the existing payload interface circuits. A third circuit, in parallel with the loads on main B is added to supply a nominal 5 kW for use by the payload subsystems which would be decoupled from the experiment main bus. This scheme, which is the nighttime equivalent of the daytime schematic given in Figure 3-10, is consistent with ERNO studies for handling increased power capability as addressed in Spacelab preliminary report TN-PD-007178.

3.1.4.2 Structural/Mechanical

Requirements and Constraints

The PEP installation for launch, orbital periods of no use, and re-entry shall be in the Orbiter payload bay. A location in the forward payload bay was selected based on visual access from the aft flight deck (AFD) window for RMS operations and minimal interference with aft bay payloads. Because of the high likelihood that PEP will be used in conjunction with Spacelab, this case represents the most stringent envelope constraints. The envelopes to be considered are those of Spacelab, the tunnel, and the external airlock located on top of the tunnel adapter.

The deployment masts for the solar blankets must be sized to withstand the orbiting flight bending modes due to maneuvers and RCS jet firings. They must deploy from and retract into minimum volume canisters.

Power and signal wires to operate and point the PEP array will utilize the existing Special Purpose End Effector (SPEE) wiring mounted along the RMS. Special cabling for carrying solar array generated power must be added to the RMS, and it must minimize the operational impact on RMS performance.

System Description

The PEP installation in the Orbiter payload bay is shown in Figure 3-12. The array boxes are mounted transversely in the bay over the transfer tunnel between the airlock and Spacelab. The deployment masts are retracted into a 21-inch diameter canister that rotates 90 degrees for deployment and retrieval. The baseline concept for the coilable mast is shown in Figure 3-13. Trunnions on each end of the PEP assembly are used for installation into standard payload attachment fittings on each side of the payload bay. Power regulation and distribution equipment are mounted on a structure adjacent and parallel to the PEP array package.

An inboard profile of the special PEP power cable installed as a kit along the RMS is shown in Figure 3-14. As conceptualized by SPAR Aerospace, Ltd, the power wire bundle will run along the arm generally in a 1 x 12 flat cable configuration or will be divided into two bundles. The wires will be

ORIGINAL PAGE IS
OF POOR QUALITY

CR54
42292

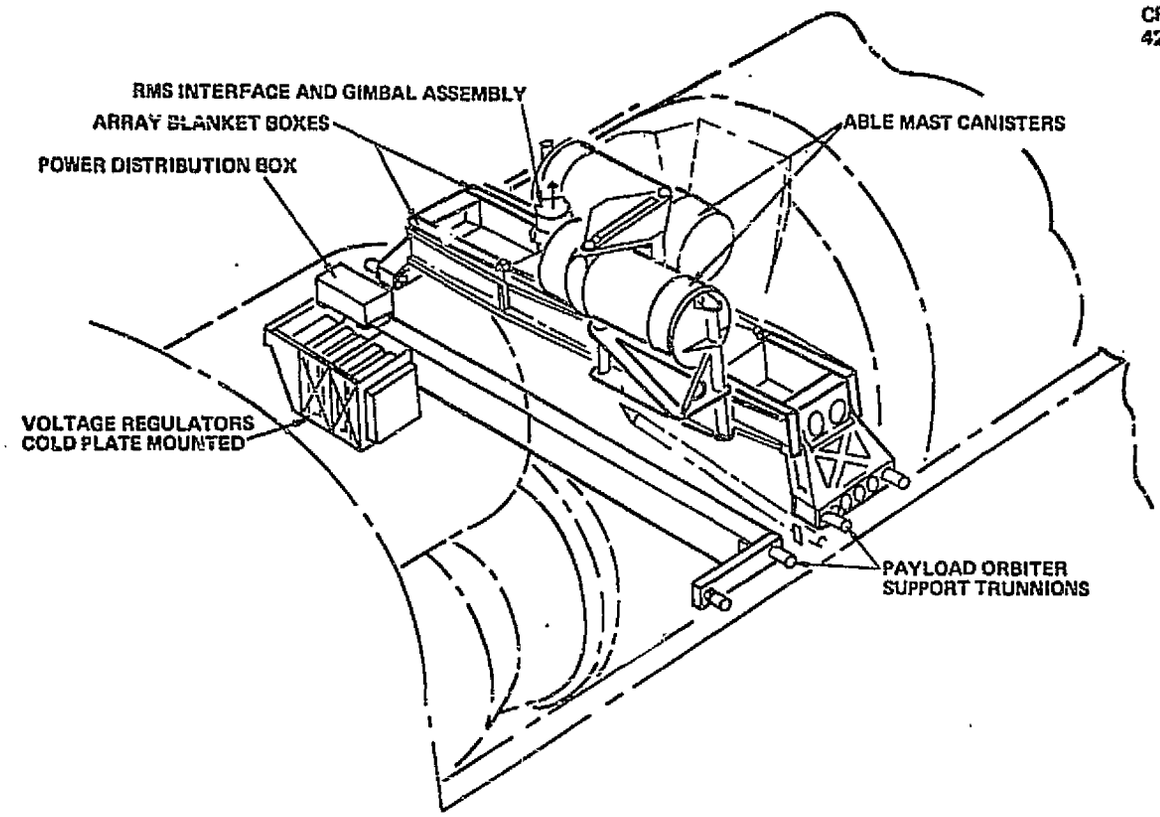

Figure 3-12. PEP Installation

CR54
41898

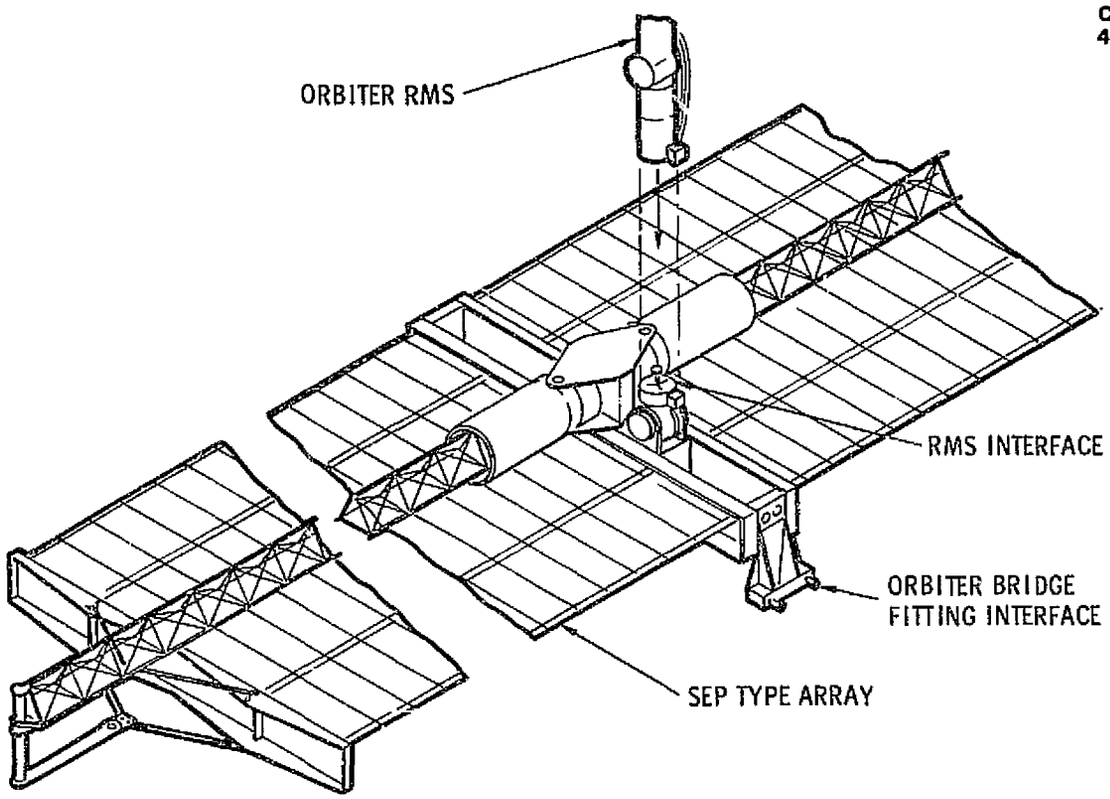

Figure 3-13. Deployed PEP Coilable Mast

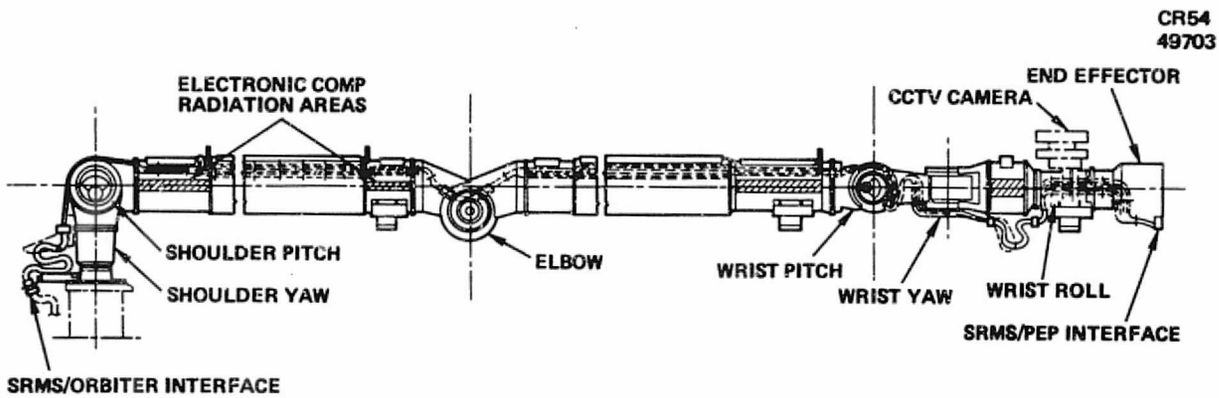

ORIGINAL PAGE IS
OF POOR QUALITY

Figure 3-14. Proposed PEP Powerbus Routing on SRMS

routed to avoid interference with existing RMS cabling and to maximize thermal dissipation. Near the RMS joints, the wires will be configured to accommodate the joint motion by dividing into two bundles and in some cases by grouping into a nearly circular cross section. After trading off several approaches, the recommended concept for the important wrist roll axis routs the cable grouped as a 3 x 4 configuration utilizing a cable loop which allows ±180 degrees of wrist rotation. The cable crosses the RMS effector interface through an umbilical (motor driven for attachment and disattachment), passes through slip rings and finally a cable loop leading to the array wiring.

Majcr Trade Options

The principal structural/mechanical trades performed in this study were primarily configuration oriented to determine a method of packaging the two wing symmetrical array for stowage in the Orbiter. Additional trade areas included solar array mast sizing/dynamics and wire installation features on the RMS.

Trade Factors and Decisions

PEP Packaging and Orbiter Installation—There are two primary candidate locations in the Orbiter payload bay for storing the added PEP array assembly with Spacelab and tunnels installed in the Orbiter bay. One is parallel and

adjacent to the Orbiter side walls and the other is transversely (sidewall to sidewall) between the airlock and the Spacelab. Several versions were examined. Most arrangements use a deployment mast for each blanket although prior to the selection of the symmetrical bi-wing, at least one asymmetrical concept was examined using a single deployment mast for both blankets. Because of the geometry constraints forward of the Spacelab (with short tunnel) due to the airlock, the longitudinal orientation of the array boxes could not be used with the deployment mast canisters centered on the blankets.

The transverse box concepts are complicated by the size of the deployment mast canister and, based on the originally sized boom, a canister 25 inches in diameter was assumed. This size and the related canister length required the canisters to be staggered where stacked vertically on the array boxes as in the selected version. Other versions where the boxes are oriented to place the canister in an aft position with respect to the boxes would allow the canisters to be butted axially with each other on a common pivot. The canister diameter (and boom) has subsequently decreased, but the concepts were not further iterated for the new size which is approximately 21 inches in diameter and proportionately shorter. A further examination of packaging possibilities with smaller size canisters may afford some simpler packaging concepts.

The installation of the array package was complicated by the necessity of stradling the short Spacelab tunnel and its supports at the Orbiter sidewall. Recent developments (at the time of preparation of this report) have changed the planned configuration of the tunnel which will require some change to the equipment support rack but will delete the tunnel's sidewall supports and simplify the interface between the PEP array and the Orbiter support fitting.

Solar Array Mast Sizing/Dynamics—The blanket deployment masts were examined for candidate concepts including coilable, folding and telescoping. For the most part, folding and telescoping concepts either required too large a package or involved many segments with companion complexity and weight. The coilable mast concept was originally sized to equal in bending strength to the wrist of the RMS; however, later dynamic considerations showed an improvement from a softening of the array mast stiffness and lowering of the

natural frequency. Figure 3-15 shows a typical influence case wherein the limiting case of RMS wrist torque in a roll maneuver is illustrated. As indicated, the distribution of torque due to axial reaction and beam moments is given as a function of the array isolation frequency. An important limiting parameter is in the input pulsed roll rate. The allowable roll rate curve represents the roll rate permitted so that the sum of the two moments does not exceed the wrist torque. As seen, high isolation stiffness (which increases the load with a constant rate) governs the permissible roll rate for a constant wrist load. A realistic maneuver rate of 0.25 deg/sec was used, requiring a high compliance mast mounting providing an array natural frequency of 0.02 Hz. This and other considerations resulted in a final preference for a collable mast approximately 18 inches in diameter in a 21-inch diameter canister.

CR54
44093

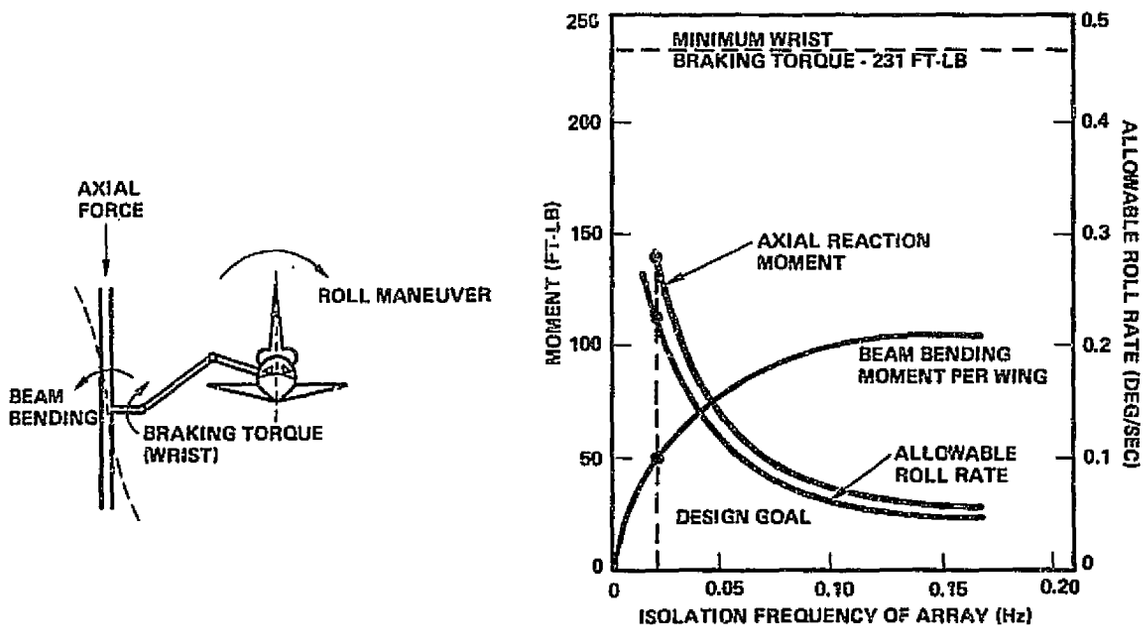

Figure 3-15. PEP Solar Array Beam Loading Factors (RCS Primary Thrustors)

Power Cable Installation Along RMS—Several trades were performed by SPAR to provide a design concept for the power cable that would have minimum

impact on normal RMS operation. These are summarized in Table 3-5. The limitation of wrist roll freedom appears to have a minor effect on payload operations when the cable is attached with PEP undeployed. This limitation requires selectivity in the method for payload handling in some cases, which could be relieved if the freedom were increased to ±210 degrees. Further study is necessary to determine if greater freedom is required or achievable with the volumetric constraints.

Table 3-5. RMS Power Cable Wiring Trades

Subject	Trade	Comments
Installation	$\boxed{\text{External}}$ vs internal to thermal protection	External saves complete redesign of thermal protection system.
Installation	Permanent vs $\boxed{\text{kit}}$	Kit lessens weight impact and increases operational flexibility for non-PEP missions.
Harness Attachments	$\boxed{\text{Permanent}}$ vs kit attachments	Permanent harness attachments provide less turnaround time, with a flight penalty of under five pounds.
Wiring Routing	Numerous alternatives	Routed to allow maximum heat dissipation, avoid RMS electronic heat radiation areas, and (where possible) maximize cable turning radius.
Wrist Roll Concept	$\boxed{\text{Loop}}$ vs cassettes or leaf spring	Physical interference of large wire bundle with TV camera and connector box result in loop as best practical solution.
Wrist Roll Freedom	$\boxed{\pm 180^\circ}$ vs $\pm 447^\circ$	$\pm 180^\circ$ may have minor operational limitations when PEP not deployed. $\pm 447^\circ$ (present capability without PEP) probably not achievable, but $\pm 210^\circ$ may remove operational limitations.

$\boxed{}$ Selected

3.1.4.3 Avionics and Control System

Requirements and Constraints

The PEP Avionics and Control System provides deployment and retraction control for the solar array, performance and event assessments, command, actuation, and sensing and control computations essential to pointing the

array panels toward the sun. The pointing accuracy of the array is not a critical factor because of its low quadratic power loss characteristics. Operating power and communications relative to the Orbiter are carried by the RMS wiring harness for the SPEE. The pointing system must operate in conjunction with RMS controls and the Orbiter Digital Autopilot (DAP) and Attitude Control System (ACS) in maintaining array orientation.

System Description

The Avionics and Control System consists of a two-axis sun tracker, microprocessor, gimbal angle encoders, servos, deployment meters, instrumentation on the solar array, and a multiplexer-demultiplexer (MDM) mounted in the payload bay. This is shown in Figure 3-16.

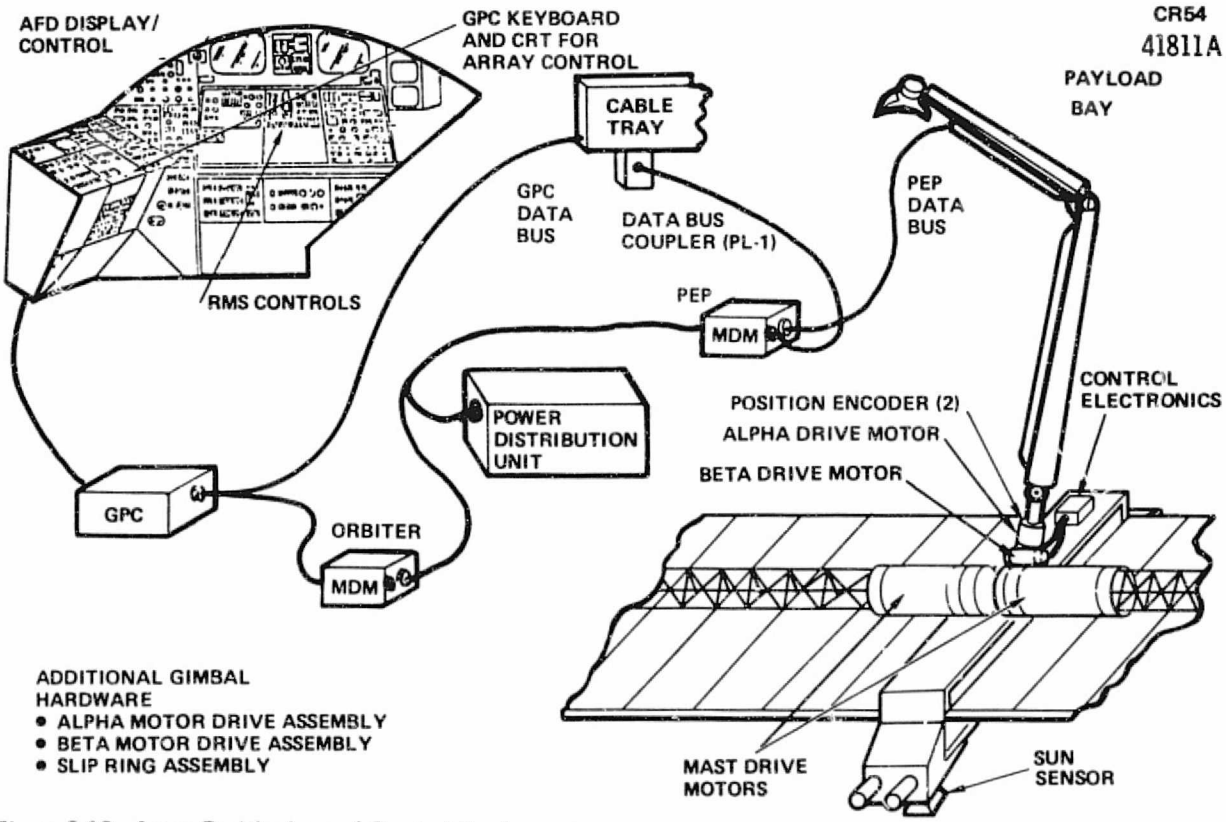

Figure 3-16. Array Positioning and Control Equipment

Major Trade Options

Two major trades in Avionics and Control have involved architectural considerations. One was involved with comparing two mechanization approaches to solar pointing of PEP. The other was an electronics system tradeoff that compared four methods for interfacing the PEP avionics with the Orbiter aft flight deck and its electronics systems.

Trade Factors and Decisions

The alternatives considered for PEP solar pointing are given in Figure 3-17. Each concept needs the General Purpose Computer (GPC) to orient the RMS wrist perpendicular to the orbit plane for the given Orbiter orientation. Also, the GPC must position the PEP so that it cannot come in contact with the Orbiter, as its gimbals sweep through their angular excursions. The two approaches consist of an automatic pointing system where commands are generated in the GPC and given to the array servo system with gimbal angle feedbacks, and a sun tracking control system for the sunlit side, and array orientation feedback for the darkside of the orbi..

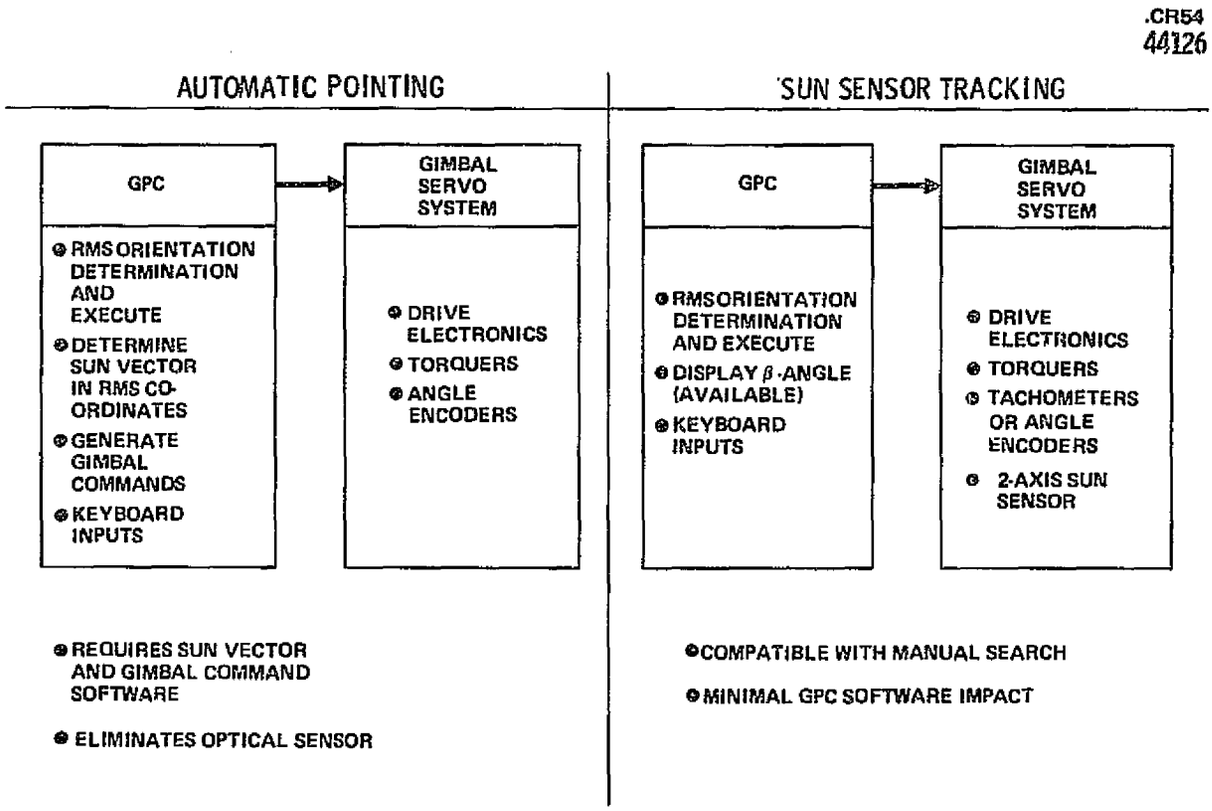

Figure 3-17. PEP Solar Array Control Alternates

Although the automatic pointing approach eliminates an optical sensor, it has a measurable impact on the GPC software because the relationships between the Orbiter attitude, the Orbiter location in orbit, the RMS gimbal angles, and the sun vector must be solved. Sun sensor tracking approach is preferred because it allows greater astronaut participation in search and reorientation, gives a more direct assessment of system performance, and minimizes the impact on the GPC software. Within this concept, the choice

of gimbal encoders versus integrating the output of tachometers favors the former because it presents a calibratable reference for measuring and displaying gimbal angle.

The four options considered for the PEP avionics interface with the Orbiter are: (1) a payload bay-mounted MDM interfacing with a GPC data bus coupler, the array-mounted control electronics unit and a payload bay-mounted power distribution unit, (2) an AFD-mounted MDM with the same interfaces as Option 1, but requiring some 60 pressurized AFD bulkhead penetrations, (3) a pulse code modulation (PCM) multiplexer for control electronics and power distribution unit data which interfaces with a data interleaver channel and a PEP-peculiar control/display panel for hardwire control, and (4) a large AFD-mounted control display panel performing all control and data handling and interfacing with an MDM for ingress to the Orbiter display processor, cathode ray tube (CRT), and telemetry accommodations. The options were traded on the basis of qualitative considerations, equipment cost, and weight as shown in Table 3-6. Although Option 2 has least cost and weight, the considerations of the pressurized bulkhead penetrations and the lack of room in the AFD for additional MDM modules make it less attractive than Option 1. The other options are not strong contenders.

Although the avionics and control system has been structured to use the existing SPEE wiring along the RMS for its interface with the Orbiter, the high data rate (1 mbps) associated with the MDM interface may be incompatible with the standard thermal protection system (TPS) wiring along the arm. Detailed analysis and/or tests will be required to resolve this potential incompatibility. Alternate concepts to be considered, should incompatibility exist, are: adding special wiring, changing the SPEE wiring, and developing an MDM surrogate.

3.1.4.4 Thermal Control System

Requirements and Constraints

The PEP thermal control system in conjunction with Orbiter capability provides cooling of all heat generated within the Orbiter, PEP, and payloads.

Table 3-6. PEP Avionics Orbiter Interface Options Trade Data

Option No. (Cost, Wt)	Pro	Con
1* ($194K, 32 lb)	• No Orbiter modifications. • Standard crew interface--training/simulator not required. • PEP equipment removal facilitated. • Reduced probability of wire breakage with repeated removals/reinstallation.	• Addition of electronic component to equipment requirements unless OFT MDM available GFE. • Cold plate addition required (22 W must be dissipated).
2* ($121K, 11 lb)	• Reduced equipment requirements. • Standard crew interface.	• AFD MDM I/O module positions reportedly unavailable. • 60 additional AFD bulkhead penetrations required. • Increased probability of wire breakage with repeated removal/reinstallation.
3 ($329K, 35 lb)	• Minimum interface with Orbiter computer system.	• AFD removal/reinstallation impact. • Loss to payloads of data channel (1 of 5) • Two additional electronic components required. • Cold plate addition required (≈10 W) must be dissipated). • 60 additional AFD bulkhead penetrations required. • Wire breakage probability with repeated removal/reinstallation.
4 (236K, 28 lb)	• Reduced interface with Orbiter computer system.	• Nonstandard crew interface requires crew training/equipment. • 60 additional AFD bulkhead penetrations required. • Wire breakage probability with repeated removal/reinstallation. • AFD removal/reinstallation impact. • AFD MDM serial I/O channel required.

*Recommended options.

These heat loads include electrical power dissipation, PEP and Orbiter parasitic loss, Orbiter fuel cell waste heat, and metabolic loads.

Figure 3-18 shows the PEP heat loads in addition to those for the baseline fuel cell powered Orbiter operating at 21 and 29 kW electrical power output. Shadeside heat loads are the same for PEP and fuel cell powered Orbiter, but the PEP loads are less for sun operation when fuel cell waste heat is reduced.

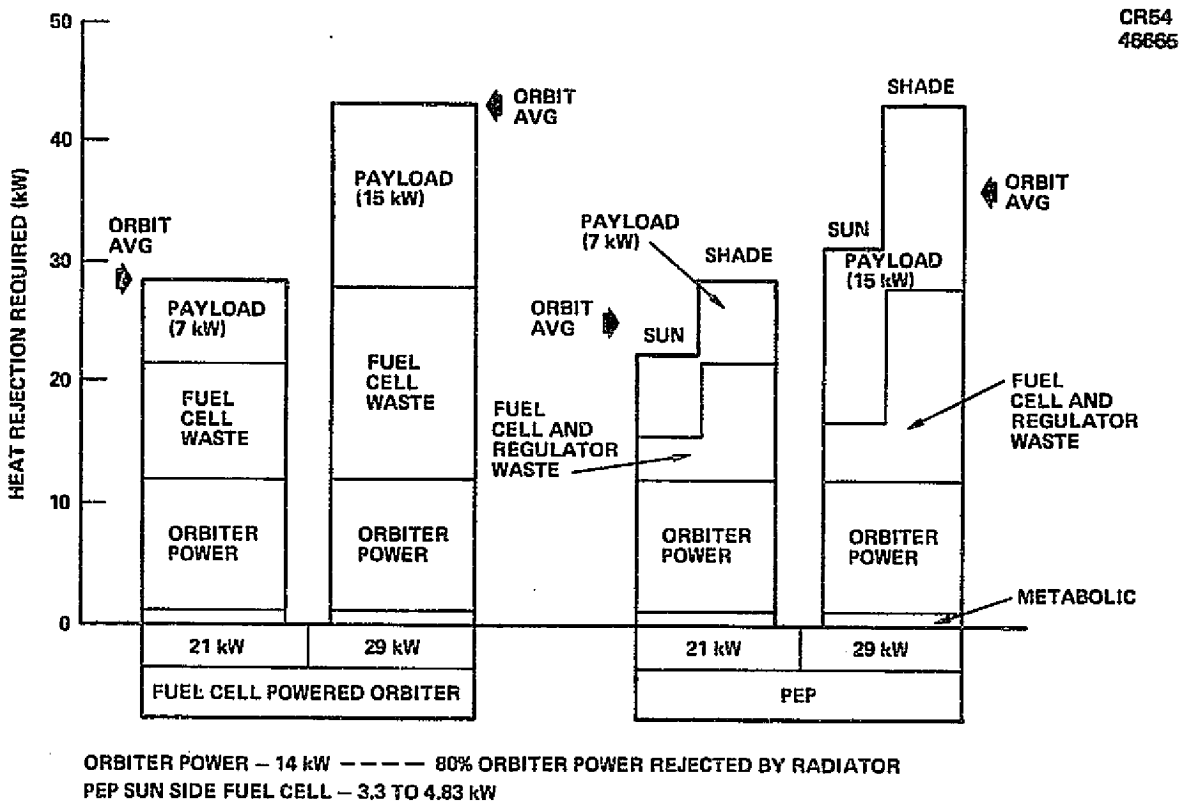

Figure 3-18. Heat Rejection Requirement Fuel Cell Powered Orbiter and PEP

Several maximum cooling temperature constraints exist within the systems include (1) 140° F fuel cell return temperature, (2) 120° F for Orbiter cold plate temperatures, and (3) 166° F for PEP regulators.

Subsystem Description

The PEP thermal control subsystem consists of cold plates, lines and connectors to provide cooling to the PEP voltage regulators. This cooling, amounting to about 2.64 kW, is required on the sunside of the orbit when power is provided by the solar array.

The regulators, mounted on cold plates, are maintained below 66° C by freon 21 cooling fluid from the Orbiter. PEP cooling fluid from the aft cold plate loop is diverted for PEP thermal control. The physical arrangement is shown in Figure 3-19. The two aft cold plate loops run down either side of the Orbiter bay and disconnects are provided to interface the Orbiter loops. Jumpers are installed when the PEP is not installed in the Orbiter. The pressure drop of these jumpers is comparable to the PEP thermal control system, thus preventing flow balance changes when the PEP is not being flown.

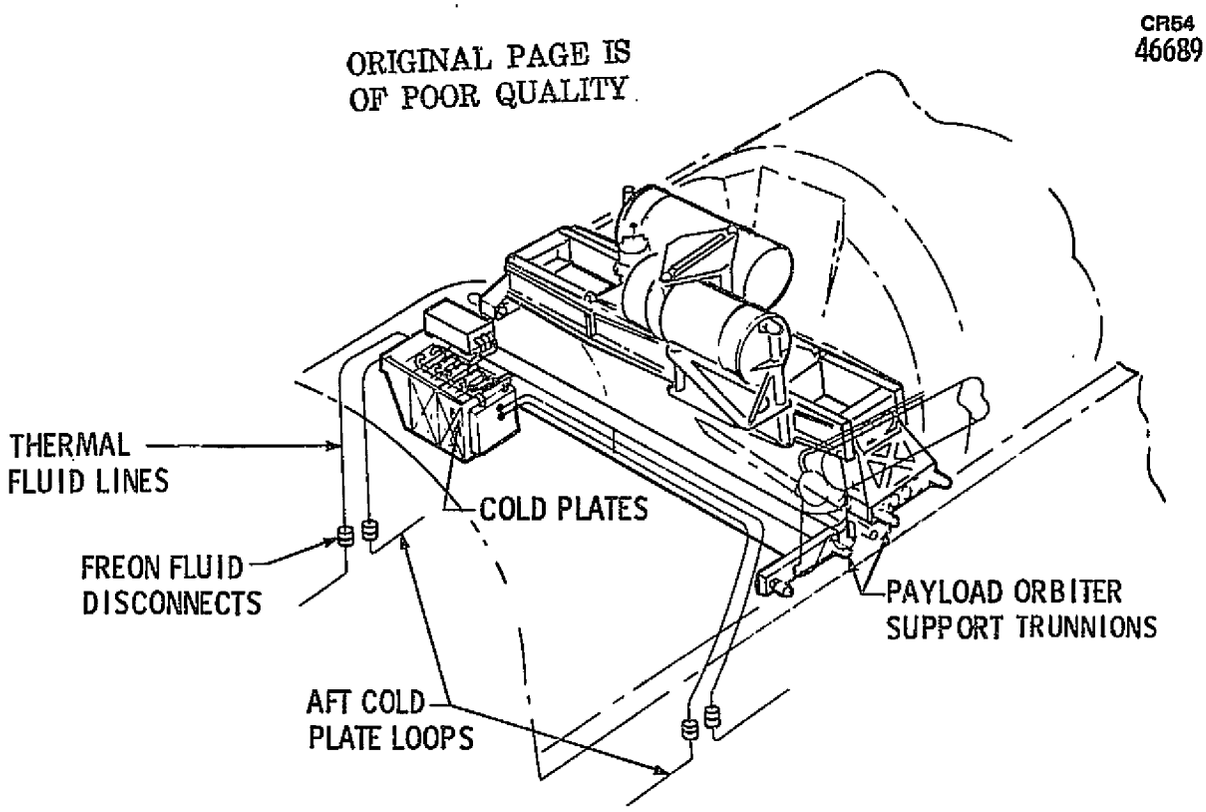

Figure 3-19. PEP Thermal Control Interfaces

Major Trade Options

Several alternates were considered for providing the thermal control function, i.e., (1) all cooling by Orbiter, (2) Orbiter supplemented by a PEP radiator, or (3) Orbiter with passive cooling of the PEP regulators.

A separate trade was performed to determine the location within the thermal control system of the PEP cold plated regulators.

Trade Factors and Decisions

The option wherein all the cooling is provided by the Orbiter has the advantages of low cost, weight, and complexity. Performance adequacy is the key question regarding this option. Figure 3-20 shows the results of an analysis evaluating the performance capability for various Orbiter orientations, forward radiator deployment angles, and degree of Flash Evaporator System (FES) operation.

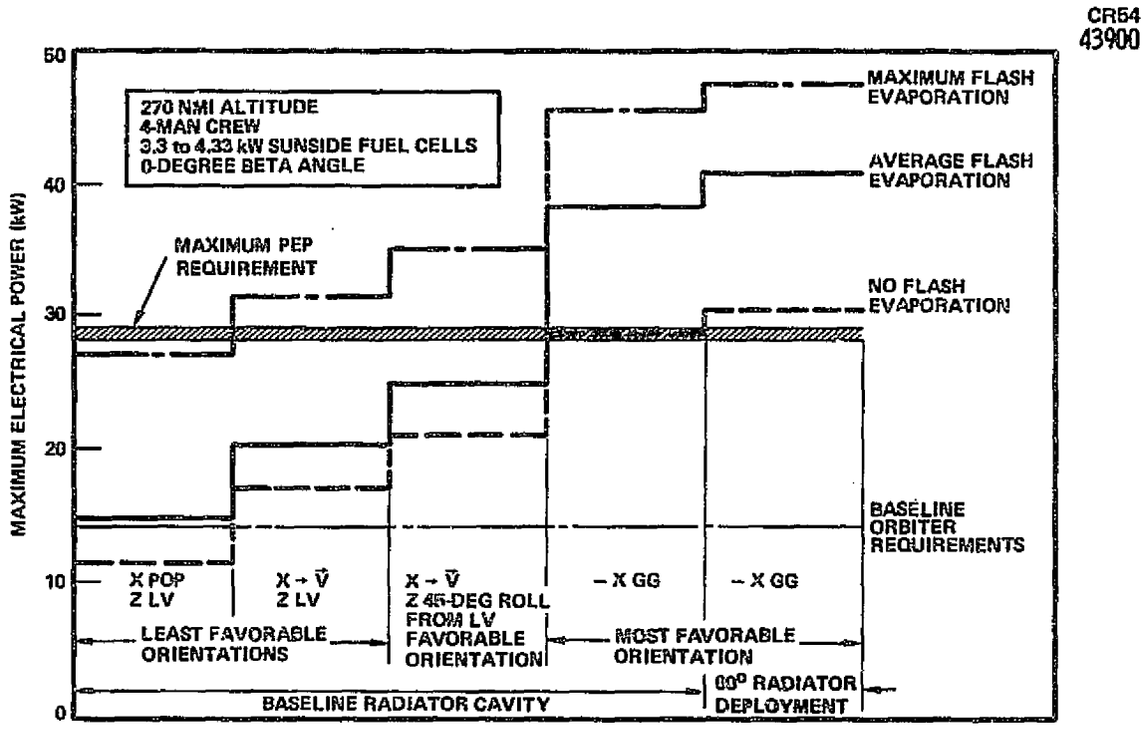

Figure 3-20. Typical PEP Heat Rejection Performance

Orbiter bay facing earth (XPOP, ZLV) represents a very unfavorable orientation and the basic Orbiter heat loads cannot be accommodated without FES operation. Performance is improved at other earth-viewing orientations (X→V, ZLV with and without roll), however, the design power level of 29 kW cannot be accommodated on a continuous basis.

Favorable orientations, such as nose down with roll for favorable radiator orientation, will nearly allow the 29 kW design load to be rejected without FES operation. Changing the Orbiter radiator deployment angle to 60 degrees allows a PEP power level of 30 kW to be accommodated without FES operation. Use of the FES with favorable orientations results in a large overcapacity in heat rejection.

Based on these results, the Orbiter can provide adequate cooling because (1) a 60 degree radiator deployment can be easily obtained, (2) gravity gradient operation will be a primary orientation to reduce RCS expendables, and (3) high power payloads will not require the unfavorable orientations.

Thermal control of the PEP regulators involved two trades: (1) method of cooling, i. e., passive or active, and (2) if active, where should the regulators be located in the Orbiter or payload cooling loops?

A simplified analysis showed that the passive approach required radiating areas around 50 square feet. Because such an area would cause packaging difficulties and tunnel/Spacelab interference, the active cooling was selected with the regulators serviced by the aft cold plate loop. This option provides adequate cooling, provides a clean Orbiter interface, and can be integrated without charging freon flow rates in any of the Orbiter freon loops.

3.1.5 PEP Mission Integration and Operations

Figure 3-21 is a pictorial flow of the PEP processing activities required at each launchsite facility along with the most significant on-orbit activities. Horizontal processing and integration was baselined for the PEP, with integration in the Orbiter occurring in the Orbiter Processing Facility (OPF). More detail of the ground activities is included in subsequent paragraphs.

During orbital stay, the PEP will be deployed with the RMS arm and provide the power level and duration needed by the payload. The PEP will be stowed during orbital changes that require firing of the Orbital Maneuvering System or when the RMS is needed for other payload activities. During return from orbit, the PEP will again be quiescent.

The PEP will be removed from the Orbiter in the OPF and checked out in Hangar S. The dark arrows in Figure 3-21 depict the activities flow for turnaround on subsequent flights.

The PEP will utilize the Kennedy Space Center (KSC) "host" concept with JSC and the PEP contractor performing the PEP processing until it becomes operational, and then KSC will process the PEP like other flight kits.

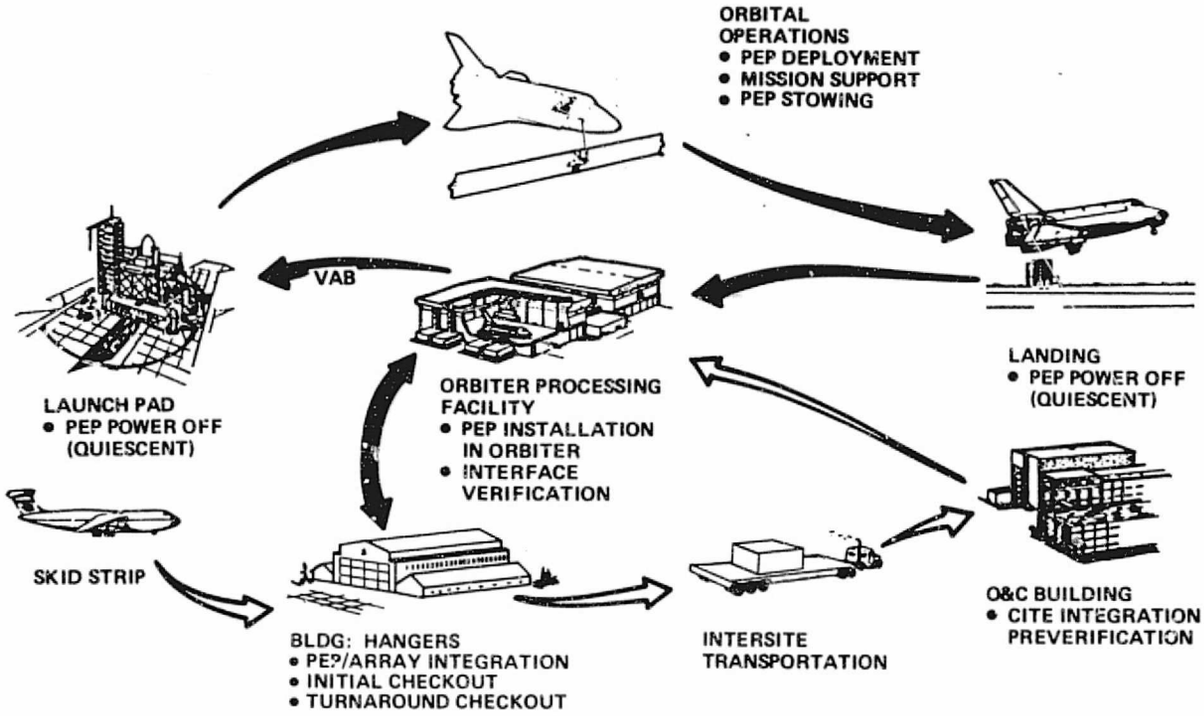

Figure 3-21. PEP Operations

3.1.5.1 Initial Launch Processing

The timeline for the PEP activities for the initial launch are shown in Figure 3-22. The PEP arrives at the Cape Canaveral Air Force Station (CCAFS) Skid Strip in its own shipping container aboard an aircraft. It will be off-loaded onto a low-boy trailer and towed to Hangar S in the CCAFS Industrial Area. After final integration of the solar arrays with the Power Supply Module (PSM), the PEP total system will be checked to verify successful integration and subsystem compatibility. Depth of testing will be based on a modified ship-and-shoot philosophy for minimum KSC checkout effort. The total initial checkout effort will require 104 hours or 13 shifts.

The PEP will be transported to the KSC Operations and Checkout (O&C) Building and installed in the Cargo Integration and Test Equipment (CITE) where it will be tested with other cargo elements and an Orbiter simulator. CITE activities for subsequent PEP flights will be on an "as needed" basis determined by other payload needs. The CITE time for the total cargo will be 88 hours, however, PEP's participation will be limited to about two days or 16 hours with power up.

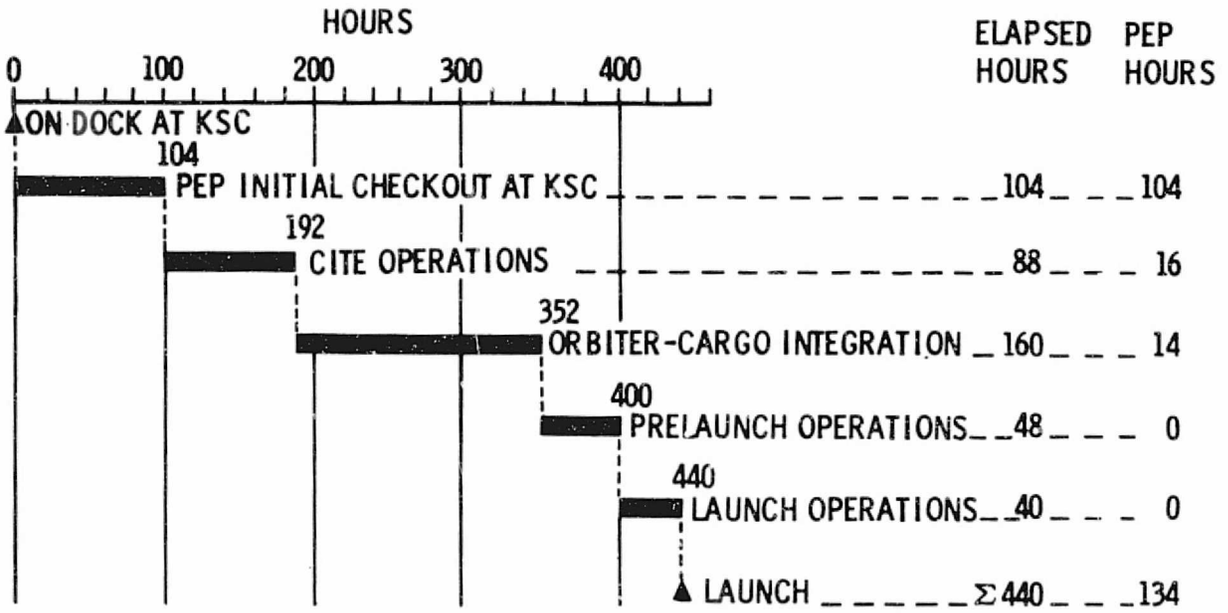

Figure 3-22. PEP Initial Launch Processing Timeline

The integration of PEP into the payload bay is identical to the similar task during subsequent turnaround flights. It is detailed in section 3.1.5.2 of this report. Installation of PEP fluid lines and special bridge fittings in the payload bay will require six hours. The Power Supply Module (PSM) and Equipment Support Rack (ESR) installation and verification will require only 8.5 hours for a total PEP time of 14.5 hours. After interface verification, PEP power will remain off through VAB and PAD operations; hence there are zero PEP hours planned for those operations.

3.1.5.2 PEP Turnaround Operations

The PEP processing activities required for either an operational or an extended turnaround are shown in the Figure 3-23 timeline. The dashed lines depict the Orbiter turnaround times per Shuttle Turnaround and Analysis Report (STAR) No. 14 (contractual guideline) and the continuous lines show how the PEP activities fit into the Orbiter turnaround. Considerable emphasis was placed on minimizing impact to Orbiter turnaround.

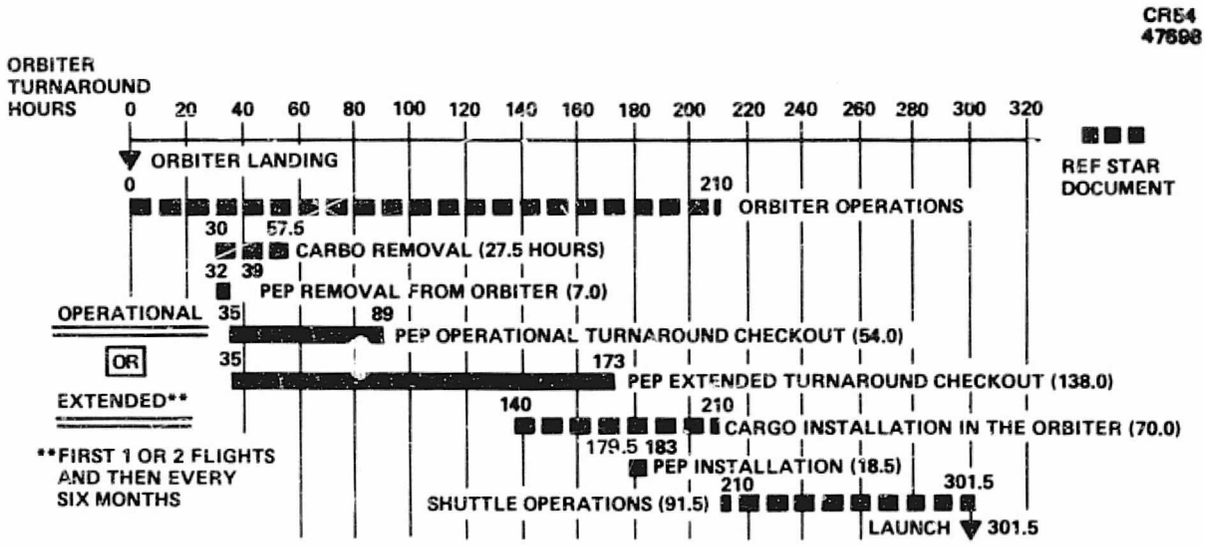

ORIGINAL PAGE IS
OF POOR QUALITY

Figure 3-23. PEP Turnaround Timeline

The critical periods are PEP installation in and removal from the Orbiter in the OPF. Mission requirements analysis thus far have identified only Spacelab flights requiring PEP, therefore, ground operations analyses have been limited to Spacelab module and pallet missions. For module flights, the PEP will have to be installed after, and removed before, the tunnel because the PEP will be located directly over it. Removal of the PEP ESR and PSM will require only seven hours because a special PEP ground support equipment (GSE) strongback will be provided to lift them simultaneously out of the payload bay.

In addition, the following design provisions for the PEP fluid lines and electrical harnesses were made to minimize impact time on the Orbiter. Quick disconnects will interface with the Orbiter coolant lines to allow wet connection of pre-serviced lines. The PEP electrical cabling will be integrated into the Spacelab standard harness to eliminate separate PEP installations. The PEP harness on the RMS arm should remain on the arm as scar to save installation and removal time. Finally, the PEP electrical and fluid interface connectors will be provided near the PEP Equipment Support Rack for easy access during integration.

The operational turnaround will be the routine processing mode. Extended turnarounds will be required until the PEP becomes operational and for solar panel maintenance (about every 2,000 hours of exposure). The PEP will be transported in its container on a flat-bed trailer to Hangar S and installed in the PEP test fixture. Its subsystems will be checked out followed by an integrated systems/mission simulation test without opening the array boxes. This effort is anticipated to take 54 working hours.

The extended turnaround checkout will require greater detail. The solar arrays will be removed from the PEP, returned to the factory for maintenance and checkout, and then returned to the launch site. Simultaneously with those activities, the remaining PEP subsystems will be checked out. After the solar arrays are reintegrated with the PEP, interfaces will be verified and an integrated systems test will be performed. The total time for this effort, including preparation and transportation to the OPF, will be 138 working hours.

The PEP strongback will be utilized for simultaneous installation of the PSM and ESR into the Orbiter payload bay. Installation and verification will require a total of 14.5 hours. Subsequently, PEP power will be off until the PEP is needed on orbit.

3.1.5.3 PEP Facilities and GSE

The facilities required for PEP processing were shown in Figure 3-21. Opening of the arrays at KSC was avoided to eliminate the resulting high cost of facilities construction or modification and GSE that would be needed. Hangar S was selected for performing the routine off-line PEP processing, and no major modifications are anticipated.

A single set of GSE will satisfy both the factory and launch site checkout and test requirements. A total of 13 GSE end items were defined as shown in Table 3-7.

Table 3-7. Thirteen Items of GSE Identified (One Each)

Array power simulator	Thermal conditioning unit
Power bus load simulator	Freon leak detector
Canister electrical simulator	Pep strongback
Orbiter cable simulator set	Pep test fixture
Integrated test cable kit	Pep transporter
Digital interface test unit	Handling and transportation kit
	Dolly

3.2 OSM POWER MODULE DESIGN CONCEPT

3.2.1 Mission Requirements

The OSM Power Module requirements were developed in Section 2. In their development, it was brought out that the requirements derived for the post-1983 period are less certain than those for the prior period. To ensure that the eventual Power Module design will be responsive to the needs of future program requirements as they emerge, a range of requirement values was examined. The mission derived requirements for the Power Module are listed in Table 3-8. These requirements were reviewed to identify those that were subject to change as user programs would mature and that would materially influence the design of the Power Module. Power level was a prime candidate and the nominal 35 kW sizing requirement was extended from 25 to 50 kW. Power Module concepts variations were defined in this range to determine the design and cost influences. The nominal orbit range was considered adequate for low earth orbit, however, potential applications at geosynchronous could emerge, therefore, the design effects of geosynchronous operation were addressed.

The orientation requirement is specified to include all attitude capability. This was extended to assess the sensitivity of simultaneous all attitude pointing. Potential changes in the remainder of the requirements were not examined because they would not greatly affect the Power Module design concept.

The actual parameters investigated show that these mission derived requirements effected the design through the considerations listed in Table 3-8. Each of these was systematically analyzed to determine the individual influence on a given design or the relative comparison of the effect on several

candidate designs. These considerations were found to influence the size of the solar arrays, the separation distance between them, the size and location of radiation, the number and type of gimbals, the center body configuration and location, location of ports, and utilities provided at each port.

Table 3-8. Mission-Derived Design Requirements

Full capability OSM Function	Increment IV Requirement	Power module Key design considerations
Power, kW	35-40	Power output Orientations Gimbal requirements Control sizing Field of view Radiator size, location Plume effects Payload clearance envelope RMS capabilities
Duration, days	Continuous	
Thermal, kW	Symmetric	
Inclination, deg	28, 5, 57, polar (28.5 nom)	
Altitude, nmi	180-300 (220-235 nom)	
Operational time period	1984 on	
Orientation	All attitude	
Stability	0.4 sec—0.1	
Acceleration level	10^{-5} G	
Berthing/docking ports	4-6	
Interface compatibility		
• Orbiter	Yes	
• Multiple free flyers	Yes	
Comm/data	To 100 mbps	

3.2.2 Configuration Design Variables

During the study, the mission requirements and configuration design drivers were used to guide the development of the OSM Power Module concepts. A "clean sheet" design approach was used to satisfy the Power Module requirements. This approach resulted in the disection of various configuration design variables to determine their relative advantages and disadvantages. Figure 3-24 illustrates the major design alternatives affecting the overall geometry of the Power Module and the design drivers which were taken into consideration in evaluating the alternatives and in selecting a concept.

The Power Module configuration may assume a number of logical geometries as shown. One of the most important considerations is the principal axis orientation of the module with respect to the orbit plane. This selection of orientation will have a significant effect on gravity gradient torques and CMG sizing and on the saturation of the CMG's used for attitude control. The symmetry or asymmetry of the mass distribution with regard to the

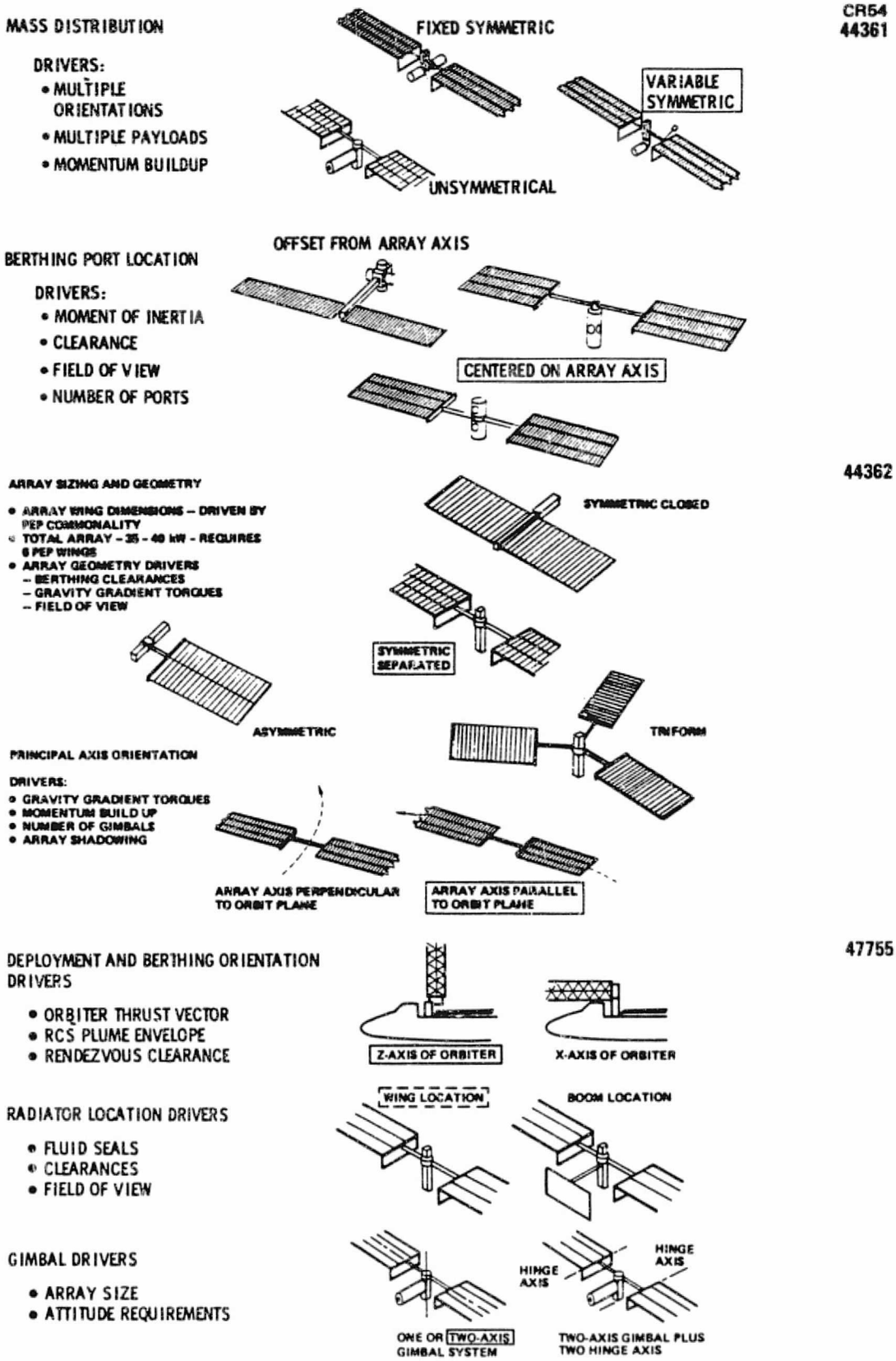

Figure 3-24. Configuration Design Variables

ORIGINAL PAGE IS
OF POOR QUALITY

array axis will have a similar impact on momentum buildup and CMG saturation. Location of the berthing ports can also impact mass imbalance since the attachment of modules will result in various mass redistributions. Optimally, one would desire to maintain the center of gravity of all masses to be as close to the solar array axis as operationally rational.

Location of the berthing ports with respect to the array wings also affects possible RCS plume impingement loads on the arrays from Orbiter rendezvous and release, rendezvous clearances, and field of view characteristics.

Location of the radiator may affect the design of the fluid lines if the location results in passage of the fluid through a gimbal system that rotates 360 degrees, requiring a rotational fluid seal rather than flexible lines.

The gimbal systems used can be located in the basic Power Module structure itself or supplied as gimbal kits to the payloads, depending on the operational requirements of the particular payload (e.g., some payloads require no pointing, others require stringent or varied pointing accuracies.) The location and number of gimbals depend on the manner in which the Power Module is flown and the requirements for β angle adjustments and orbit rate adjustments.

Throughout this section, these variables will be discussed in more detail and their effects on the operational aspects of selected configuration concepts will be compared with analytical results obtained during the study.

3.2.3 Orientations and Control System Sizing

One of the most important variables in the concept configuration is the manner in which it is to be flown (orientation) and the gravity gradient moments and other torques to which the configuration is subjected. Before discussing concept definition in Section 3.2.4, therefore, it is important to clarify the fundamental aspects of control system factors and control system sizing and to discuss several comparisons in order to provide the reader with a synopsis of the important factors which can affect the conceptual design of the configuration.

3.2.3.1 Orientation

The ability of the OSM to produce power is intimately related to the orientation of the vehicle and its pertinent parts. In turn, orientation is a function of mission requirements for pointing and has a major effect on sizing of the control system actuators. Figure 3-25 indicates the effect on average power of two vehicle orientations with the array axis perpendicular to the local vertical. They are given as a function of β angle and compared with an orientation which provides maximum average power. As indicated, the array axis perpendicular to the orbital plane (POP) provides good power levels at low β angles and the array axis in the orbital plane (IOP) provides good power levels at high beta angles. The crossover is at β = 33 at a power level of approximately 31 kW. Either of these orientations require Y-axis gimbaling and provide good earth viewing, but poor solar and celestial viewing.

CR54
46722

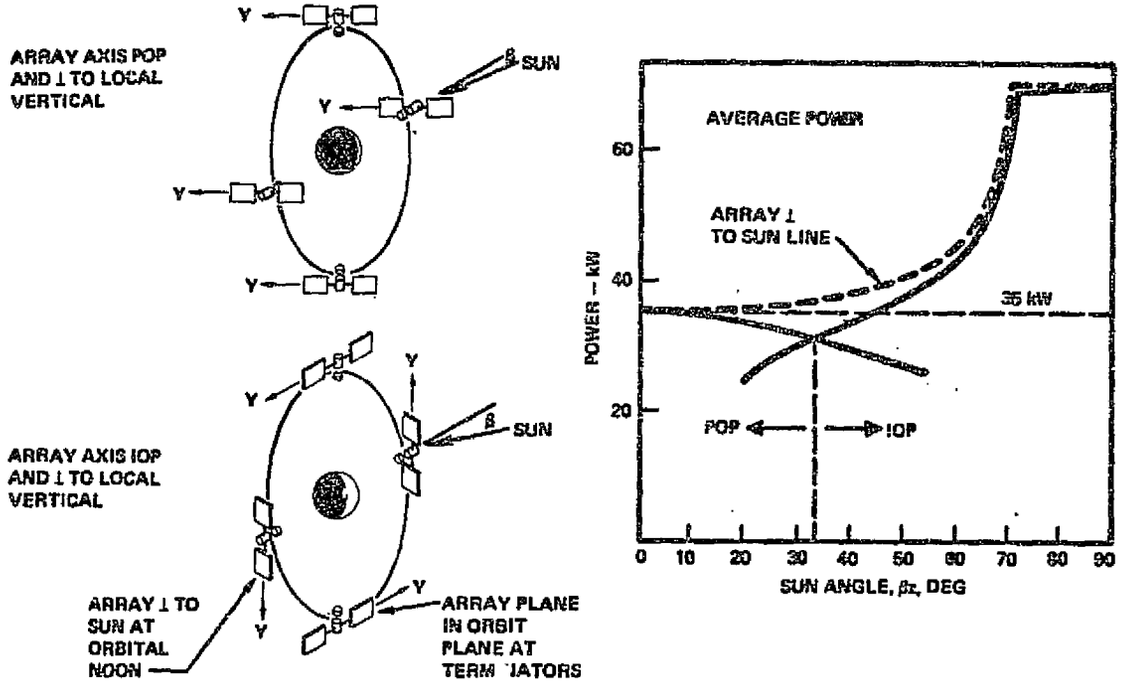

Figure 3-25. Array Axis Perpendicular to Local Vertical

The orientation with the array IOP and with the array surface perpendicular to the sun line is illustrated in Figure 3-26. It produces the maximum power (dotted) curve in Figure 3-25. The left hand illustration of Figure 3-26

ORIGINAL PAGE IS
OF POOR QUALITY

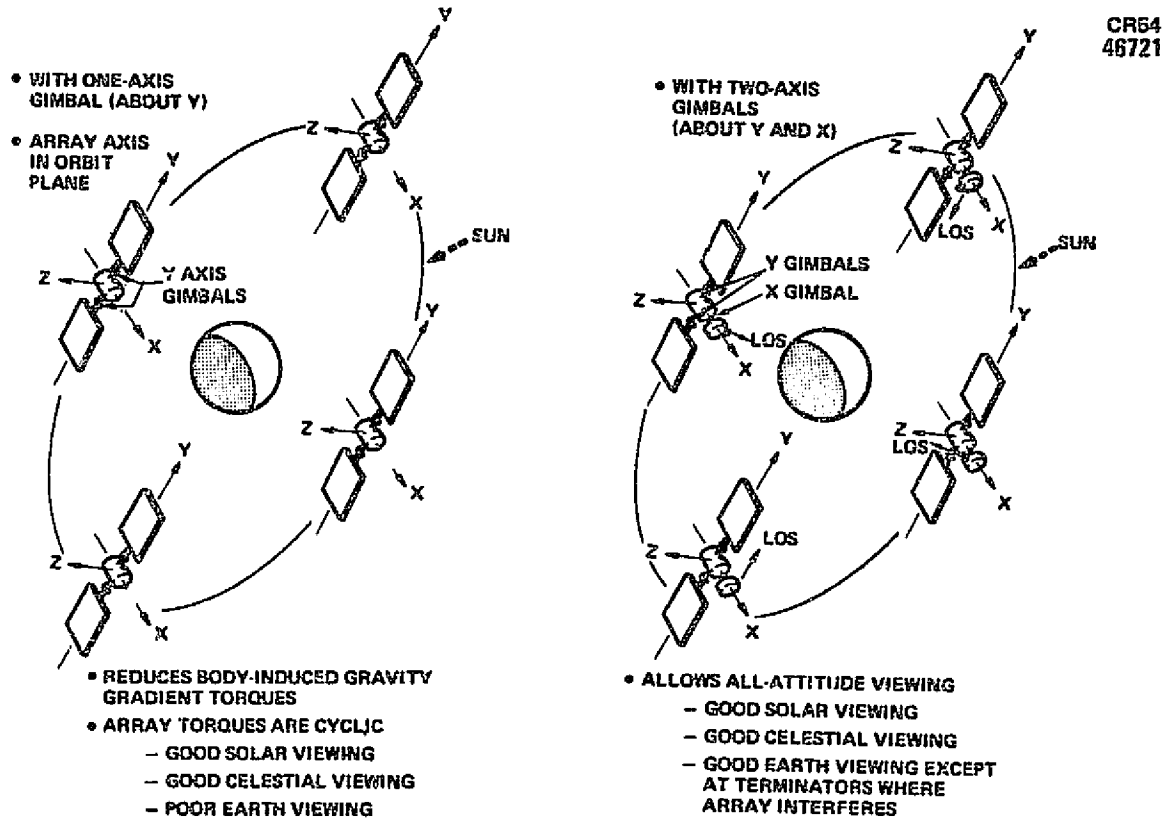

Figure 3-26. Combined IOP and Solar Inertial

shows a single Y-axis gimbal version of the IOP orientation with the solar panels perpendicular to the sun line. It provides good solar and celestial viewing, but poor earth viewing because one gimbal is insufficient for viewing on all sides. The right side illustration uses an extra gimbal about the X-axis, adding the necessary viewing freedom for earth observations. Although there is some interference by the array in earth viewing straight down near the terminators (dawn and dusk), this configuration concept has been chosen as the baseline full-capability design. Difficulty with viewing near the terminators can be alleviated by using mission programming flexibility or either of the two orientations shown in Figure 3-25. The control system sizing will be driven by the IOP/Solar Inertial orientation.

3.2.3.2 Gravity Gradient and Aerodynamic Moments

Actuation systems for active attitude control of spacecraft are strongly influenced by the moment histories caused by gravity gradient and aerodynamic moments. The moment histories in near earth orbit are generally oscillatory in nature, but, depending upon configuration and orientation,

can produce oscillatory torques that have superimposed bias torques. Unless these torques are countered or otherwise cancelled, the momentum buildup will exceed the momentum limit capabilities of a storage control system, resulting in a loss of the attitude control of the vehicle.

The effects of gravity gradient and aerodynamic torques are minimized by choosing close-coupled configuration so that the aero moment lever arm is minimized and the differential moments of inertia are also minimized. Additionally, choosing a particular axis for an appropriate orientation can further minimize oscillatory and bias torques. Conversely, configurations that are gravity gradient stabilized tend to have large booms for obtaining the ideal moment of inertia distribution for completely passive stabilization. Because the solar arrays must be solar oriented, most of these configurations will have hinges at the roots for β angle adjustment. The stabilization booms must be sized to restrict the attitude excursions during the orbit travel. Optimum location for the center of the solar array is close to the center of gravity in order to minimize aerodynamic disturbances from solar cell rotation at orbit rate, as well as atmospheric density variations because of the diurnal bulge.

An approach to accommodating gravity gradient torques for active attitude control with CMGs is introduced by Figure 3-27. The upper picture illustrates the symmetrical aspect of oscillatory (without bias) torques about the POP axis. The lower picture shows the oscillatory (but biased) nature of torques about an IOP axis. These conditions are put into use in Figure 3-28, showing the OSM full-capability configuration with the solar array axis in the orbit plane. The tilt of the mission module close-coupled about the solar array axis will result in the indicated bias torque about the IOP axis. This axis was chosen in this condition because it provides minimum moments and minimum bias. This torque can be effectively negated by the use of a "balance boom," on the configuration as shown. The balance boom essentially makes the principal axes of the moment of inertia ellipsoid orthogonal relative to the orbit plane. The controlled two degrees of freedom for the balance boom (length and pitch angle combined with a fixed lateral offset from the CG) in fact control both IOP axes (this one normal to the sun line, and the other one about the local vertical).

ORIGINAL PAGE IS
OF POOR QUALITY

CR54
44212

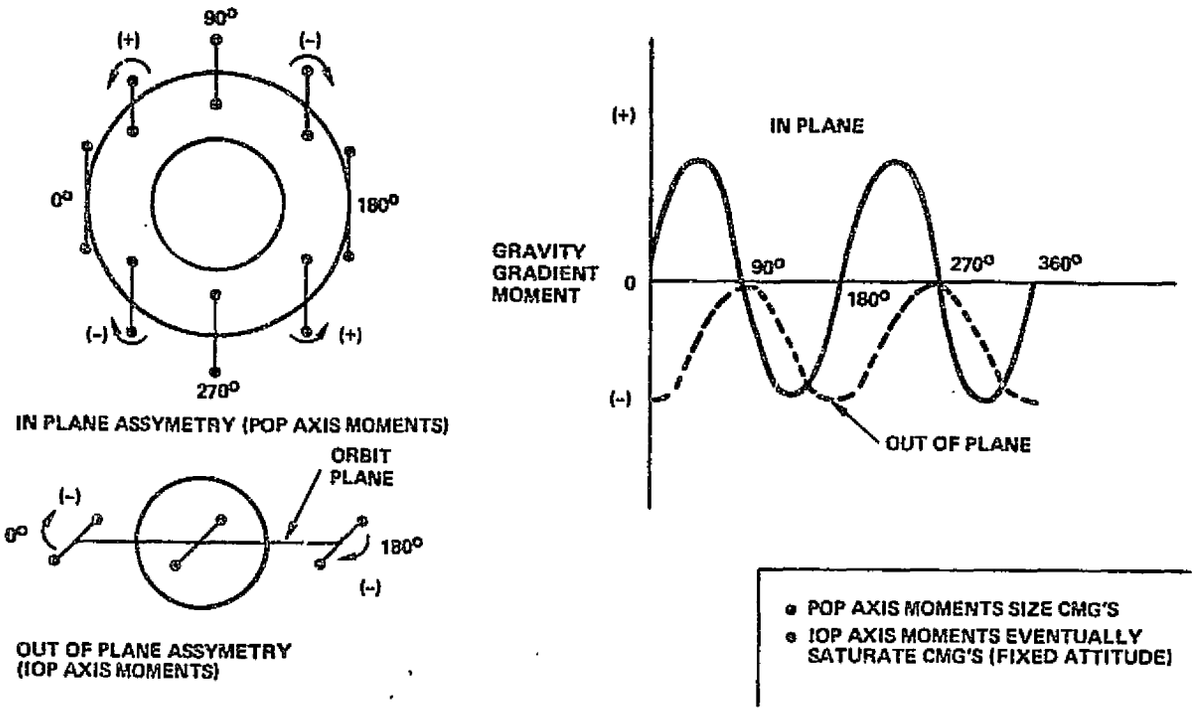

Figure 3-27. Gravity Gradient Moments

CR54
44123

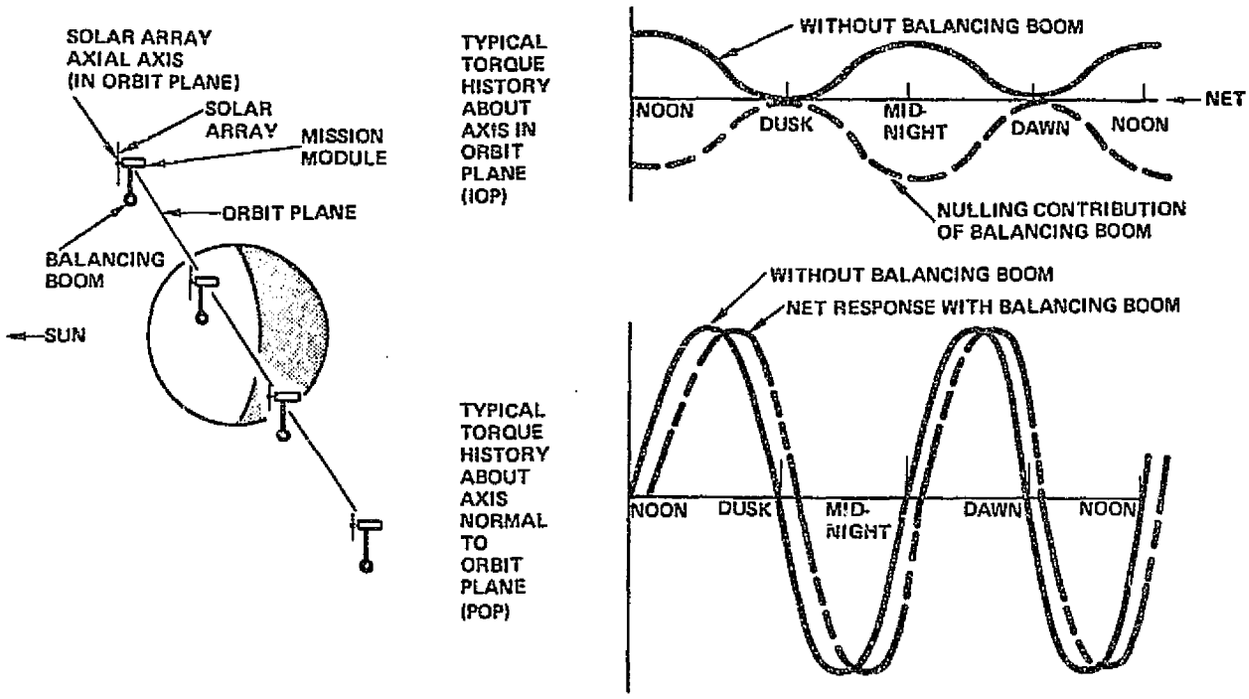

Figure 3-28. OSM-Power Module Momentum Containment Concept

Aerodynamic torques produce both oscillatory and bias moments because of the characteristics of the configuration and properties of the upper atmosphere. The existence of the diurnal bulge, a density anomaly that is a function of solar corpuscular activity, contributes to the bias torque components that can provide a momentum buildup about the POP and IOP axes. Typical momentum histories for the IOP and POP axes with both gravity gradient and aerodynamic moments are shown in Figure 3-29. The IOP axis history shown is for momentum about the vehicle principal axis close to the solar array axial axis. The gravity gradient momentum builds up as a linear function of time plus a sinusoid. The aerodynamic moment, a function of center of pressure (CP)/CG distance, results in an additional bias caused by the atmospheric density diurnal bulge resulting from solar corpulcular radiation. The flight condition shown consists of a circular orbit at 407 km (220 nmi) altitude in a condition of maximum solar array activity (S = 175). The necessity is indicated for a desaturation or nulling technique with greater than 2,555 ft-lb-sec/orbit capability. The balance boom technique is the leading candidate for this function. The POP axis history shows the symmetrical gravity gradient history resulting from a complete orientation traversal of the axis with maximum gravity gradient torque. This

CR54
46628

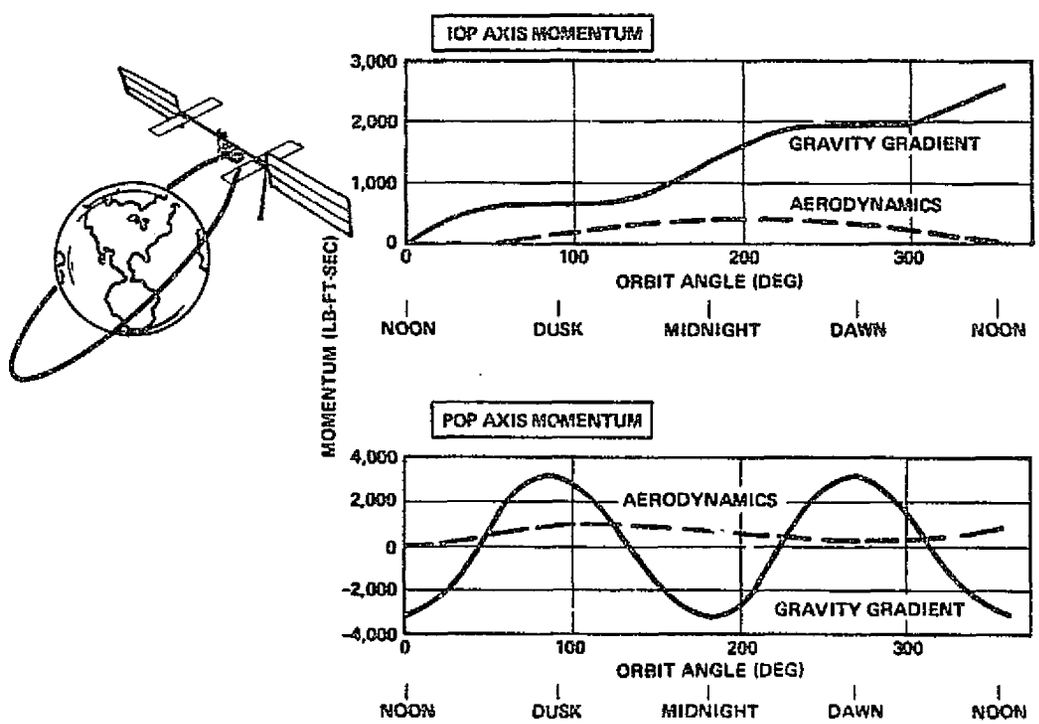

Figure 3-29. Angular Momentum History (Without Bias Trim)

amplitude is the major influence in sizing the momentum storage (CMG) system. The aerodynamic history, once again a function of CP/CG distance and the diurnal bulge, results in a bias requiring a desaturation of nulling technique with a 725 ft-lb-sec/orbit capability.

3.2.3.3 Desaturation Techniques

The bias momentum requirements for the full-capability configuration are indicated in Figure 3-30 for both the IOP and POP axes. Five techniques for nulling or desaturating the momentum storage system (ATM CMGs) were considered.

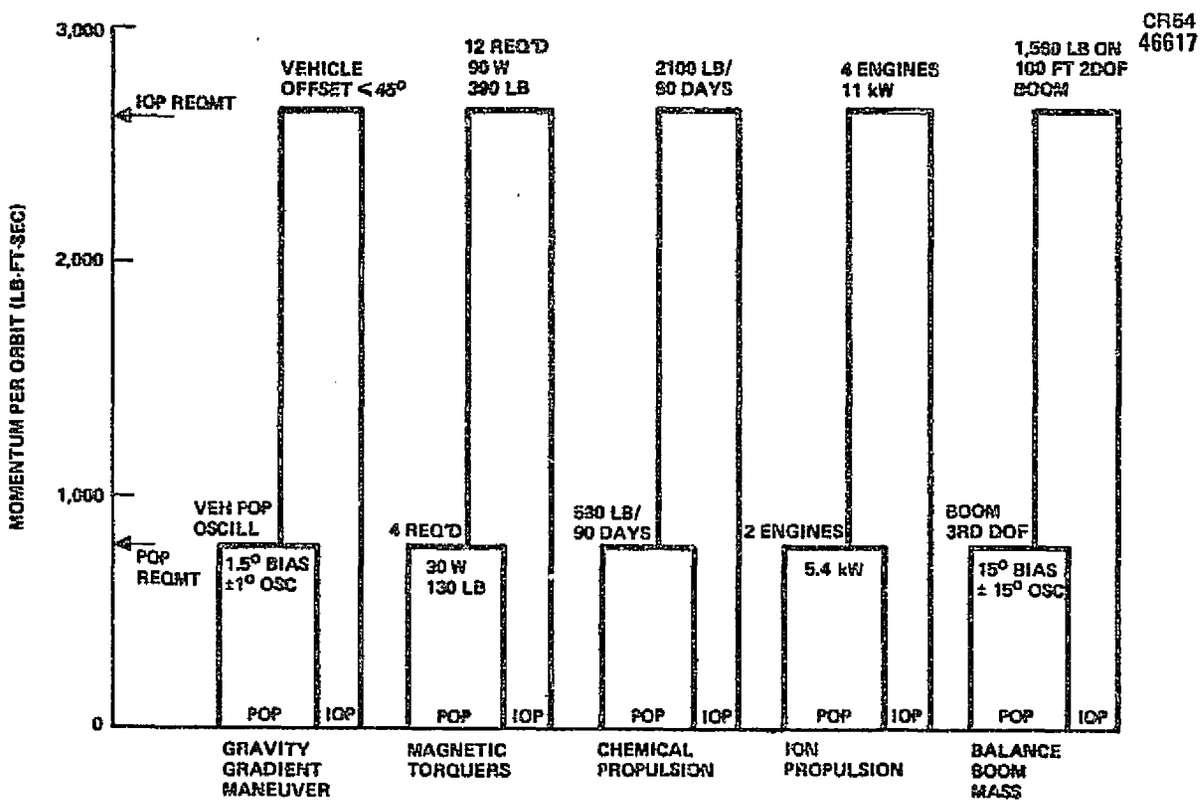

Figure 3-30. CMG Desaturation Techniques

The gravity gradient maneuver requires large offset angles to satisfy the IOP requirement compromising the desired all-attitude capability of the vehicle. On the other hand, the maneuver presents a simple solution for the POP axis momentum bias, requiring a very small addition to the stabilization and control software and resulting in a ± 1.5 degree slow (twice orbit frequency) oscillation at solar max and a g-environment of 10^{-7} g's.

It requires the use of already generally available angular compensation for precision mission pointing equipment.

The magnetic torquer system (being developed for the NASA Large Space Telescope) appears reasonable for relieving the POP bias and is particularly attractive as a backup control system. However, at the indicated level for POP, it will have an effect on near field and plasma instrumentation and, at the IOP level, it will have a major effect on these missions.

Two propulsion candidates were examined and might be attractive if on-board orbit-keeping capability is provided. The chemical system requires resupply and produces contamination. The ion propulsion system requires high electrical power that will severely compromise the delivered power. Additionally, it will have a high probability of near electrical field and plasma interference with some mission instrumentation.

The two degrees-of-freedom balance boom mass provides a satisfactory solution to the IOP bias without compromising mission flexibility and environment. Adding a third degree of freedom (second gimbal axis) to the boom would negate the POP bias torques, but would add some hardware complexity and potential axis cross-coupling.

The reference solutions for eliminating momentum bias are the balance boom mass for the IOP axis and gravity gradient maneuver for the POP axis. Continued analysis of magnetic torquer, chemical propulsion, and the balance boom for POP bias torque is recommended.

3.2.3.4 Control Actuation System Sizing

Control actuation system (CMG, balance mass) sizing was evaluated for three general configuration concepts (See Figure 3-31) to show the effect of configuration and orientation variations. As indicated in Table 3-9, the superiority of the dymmetrical configuration in sizing is apparent.

The symmetric and asymmetric concepts are compared for the basic IOP-solar inertial orientation (array axis in the orbit plane with the other axes at the inertial angle for worst moment) and POP-local vertical (array axis perpendicular to the orbit plane, and other axes aligned to achieve minimum

ORIGINAL PAGE IS
OF POOR QUALITY

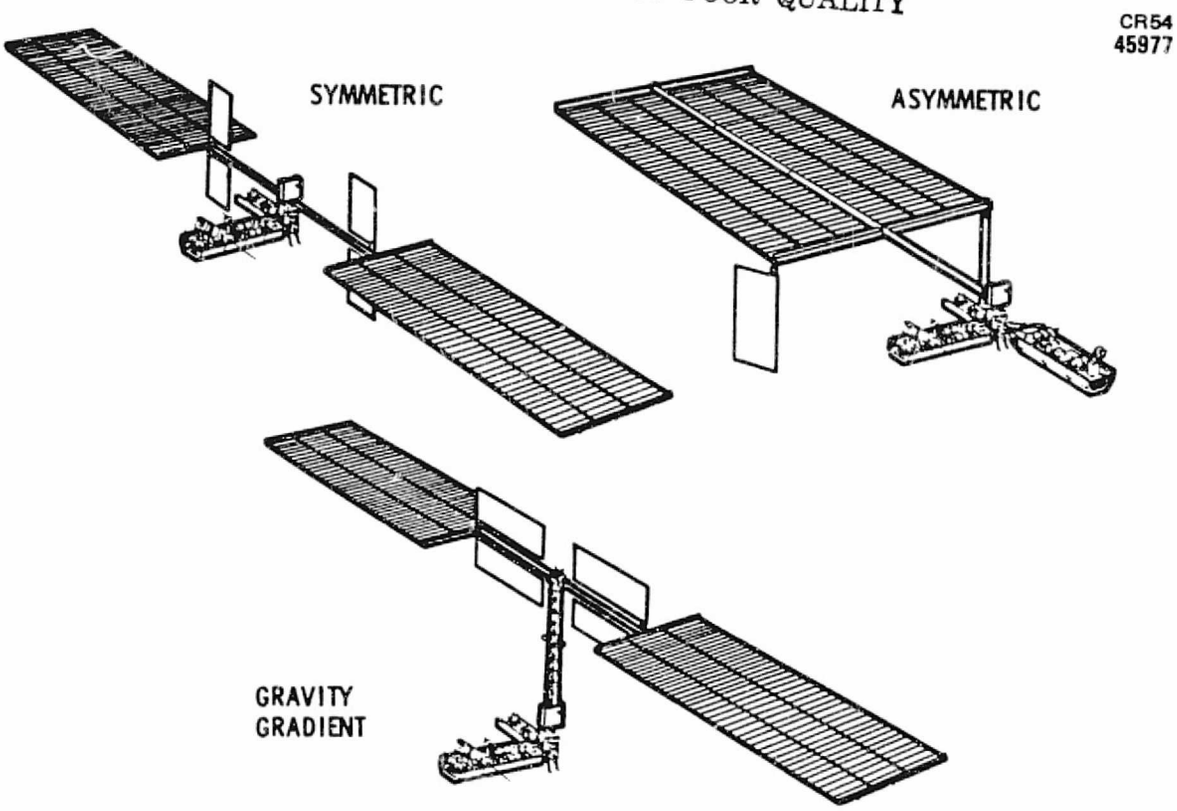

Figure 3-31. Full-Capability Major Configuration Alternates

torque about the POP axis). With a mass balance of two degrees of freedom, the basic IOP-solar inertial orientation is left with 725 ft-lb-sec per orbit about the POP axis. This could be eliminated by any of several methods, but the baseline method is a mild (0.15 ± 1.5 degree) attitude maneuver at time orbit frequency. Although the sizing for the POP orientation appears small, it provides maximum power only for low β angles. If the vehicle must be tipped to compensate for β angle, the balance weight on a 100-ft boom would be 10,000 lbs.

The asymmetric concept has three to four times the sizing requirements of the symmetric concept for the basic IOP-solar inertial orientation. The POP-local vertical requirements are similarly large, and an additional 10,000-lb weight would be required to hold the vehicle tilted to compensate for high β angles.

The gravity gradient configuration must have at least a 31-m offset of the solar array to be gravity gradient stable under the influence of aerodynamic torques with the solar array axis POP. The configuration shown

C-2

Table 3-9. Control Actuation System Sizing

Concept	Orientation	Bias momentum (ft-lb-sec/orbit)	Balance weight (lb)	Cyclic momentum (ft-lb-sec)
1. Symmetric	IOP-solar inertial	2,555(*) without balance boom	1,560(*)	±3,335(*)
		723(*) with 2-DOF balance boom		
	POP-local vertical	630 without balance boom	1,000	630
		450 with 2-DOF balance boom		
2. Asymmetric	IOP-solar inertial	6,275 without balance boom	6,080	±9,200
		2,590 with 2-DOF balance boom		
	POP-local vertical	4,400 without balance boom	2,300	5,670
		1,905 with 2-DOF balance boom		
3. Gravity gradient (36-meter mast)	Array solar inertial mast tilted 16° from local vertical about POP axis	34,320 without mast tilt or balance boom	6,352	2,160
		0 with balance boom and mast tilt		
	Array POP—mast tilted 16° from local vertical about POP axis	22,150 without mast tilt	1,000	1,640
		0 with mast tilt		

*Worst case

uses a 36-m offset, allowing an average of 16 degree tilt of the mast to balance the average aerodynamic moment with gravity gradient. The cyclic momentum is sized to absorb the aerodynamic torques about the average value. The gravity gradient concept requires an 11,900-lb balance weight on a 100-ft boom to hold the vehicle in the IOP-solar inertial orientation.

3.2.4 OSM Power Module Concept Definition

The full family of OSM concepts investigated in this Phase A study is shown in Figure 3-32. As illustrated, the PEP represents the continuously Orbiter-attached or "flyback" category of OSM concept discussed in Section 3.1. In the autonomous or free-flying class of OSM concepts, the study has

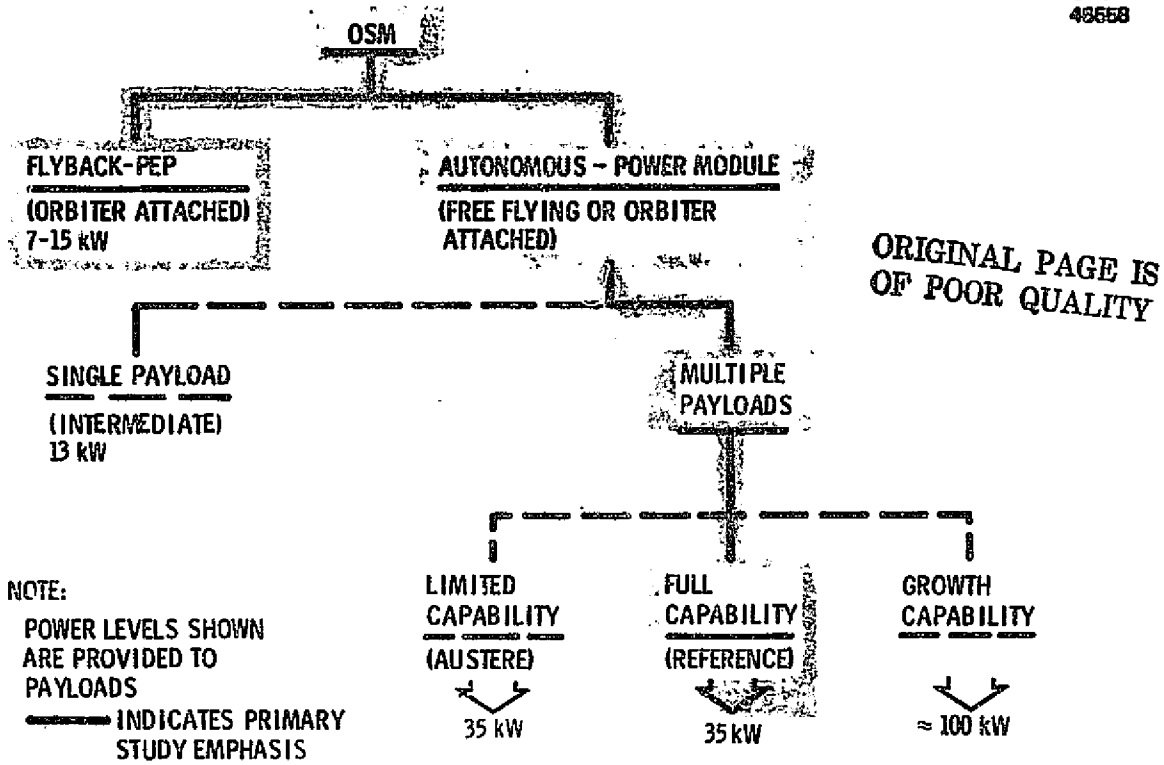

ORIGINAL PAGE IS OF POOR QUALITY

Figure 3-32. OSM Concept Alternatives

emphasized power module designs that are fully responsive to the active attitude control free-flyer (Increment 4) "strawman" set of mission requirements presented in Section 3.2. The major requirements include a minimum of 35 kW regulated power over the life of the mission, multiple berthing ports for payloads, and all-altitude orientation of payloads.

Derivatives of the PEP and autonomous Power Module have also been examined but in lesser detail. These include:

- An intermediate capability system that combines the PEP solar array with the autonomous features of the Power Module to yield a 13 kW free-flyer which is discussed in Section 3.3;
- The limited capability or austere derivative of the power module that compromise some of the full-capability features to reduce cost. Using only four of the PEP-sized array segments, instead of six as is required for the full-capability system, a maximum of 35 kW unregulated power or 30 kW at 28 VDC can be delivered at the beginning of the mission. This limited capability concept is discussed and compared with the full-capability Power Module

in this section (Section 3. 2); and

- Growth capability concepts that are in the 100 kW power range. Various approaches to adapt the full-capability concept to higher power levels have been examined and are discussed in Section 3. 4.

3. 2. 4. 1 Configuration Alternatives

Many full-capability Power Module configuration concepts have been examined in this Phase A Study. A number of alternate design concepts are shown in Figure 3-33. The key design considerations from which these Power Module concepts were derived included power output, orientation capability, gimbal requirements, control system requirements, field-of-view capabilities, radiator size and location, plume effects from orbiter RMS capabilities as associated with each concept. Preliminary tradeoffs and analyses during the beginning of the Power Module portion of the study, which included attitude control calculations, thermal analyses, and field of view computations, indicated that three generic types of configurations (Figure 3-31) were worthy of more detailed study and analysis: (1) a symmetrical separated-wing design, (2) an asymmetrical separated-wing design, and (3) a gravity gradient type configuration.

The symmetric concept is characterized by a central subsystem core assembly with attached payloads, separated array wings to provide clearance for payload orientation and the Orbiter when berthed, and geometric as well as mass symmetry to minimize control disturbances. The asymmetric type is structurally simple and has the subsystem/payload cluster offset for maximum unobstructed field of view. The gravity gradient concept separates the two main mass assemblies (array/radiators and subsystems/payloads) to provide gravity gradient stabilized orientation with respect to local vertical, primarily to enhance earth viewing.

3. 2. 4. 2 Tradeoffs

A choice of a reference configuration was based on the aforementioned analyses and tradeoffs. A major consideration was to determine the effect of configuration geometry on control parameters. Figure 3-34 summarizes variations in angular momentum requirements as a result of payload offset distance from the solar array longitudinal axis.

ORIGINAL PAGE IS
OF POOR QUALITY

CR54
44520

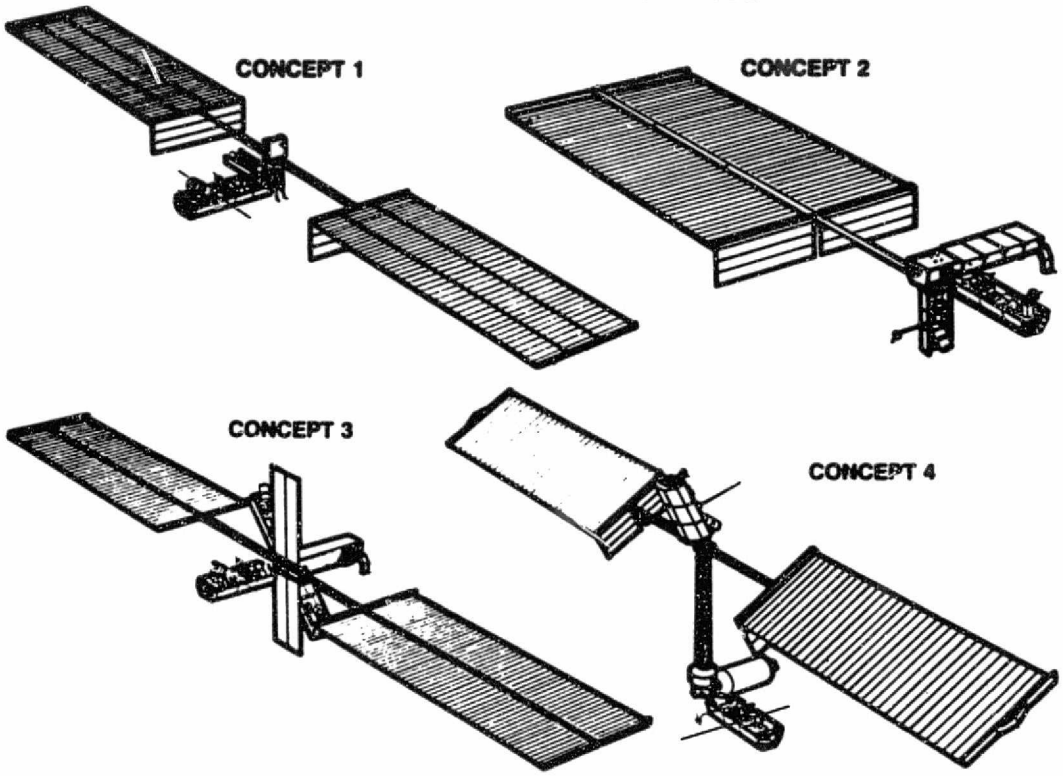

CR54
46734

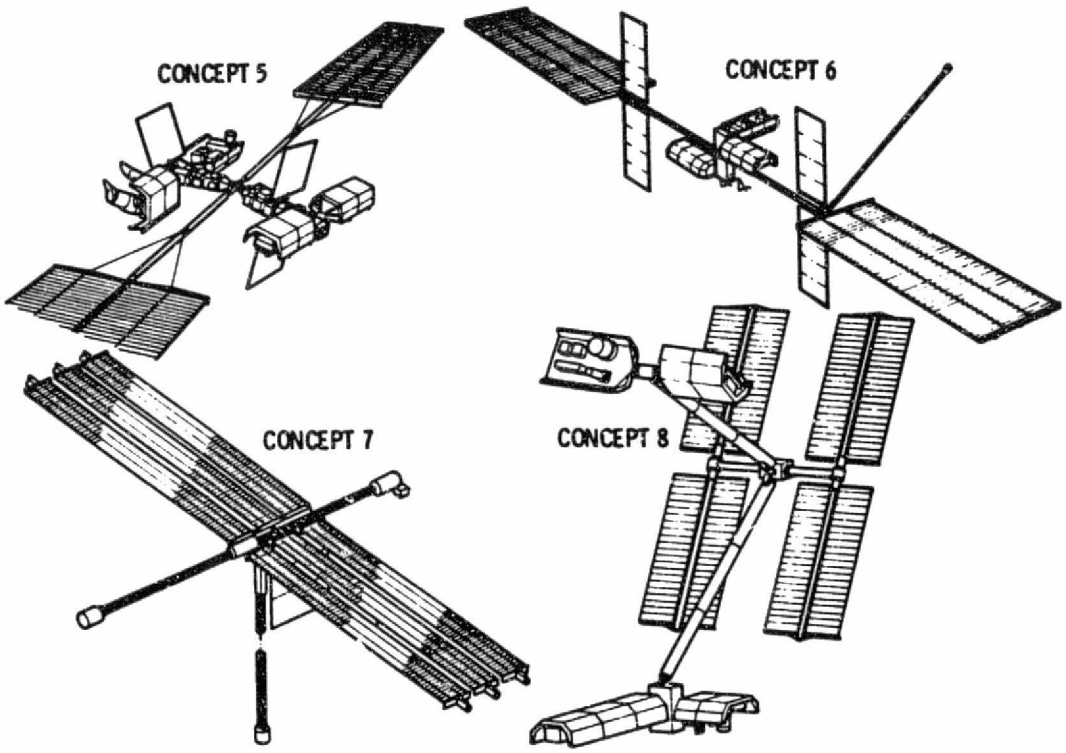

Figure 3-33. OSM Power Module - Alternate Concepts

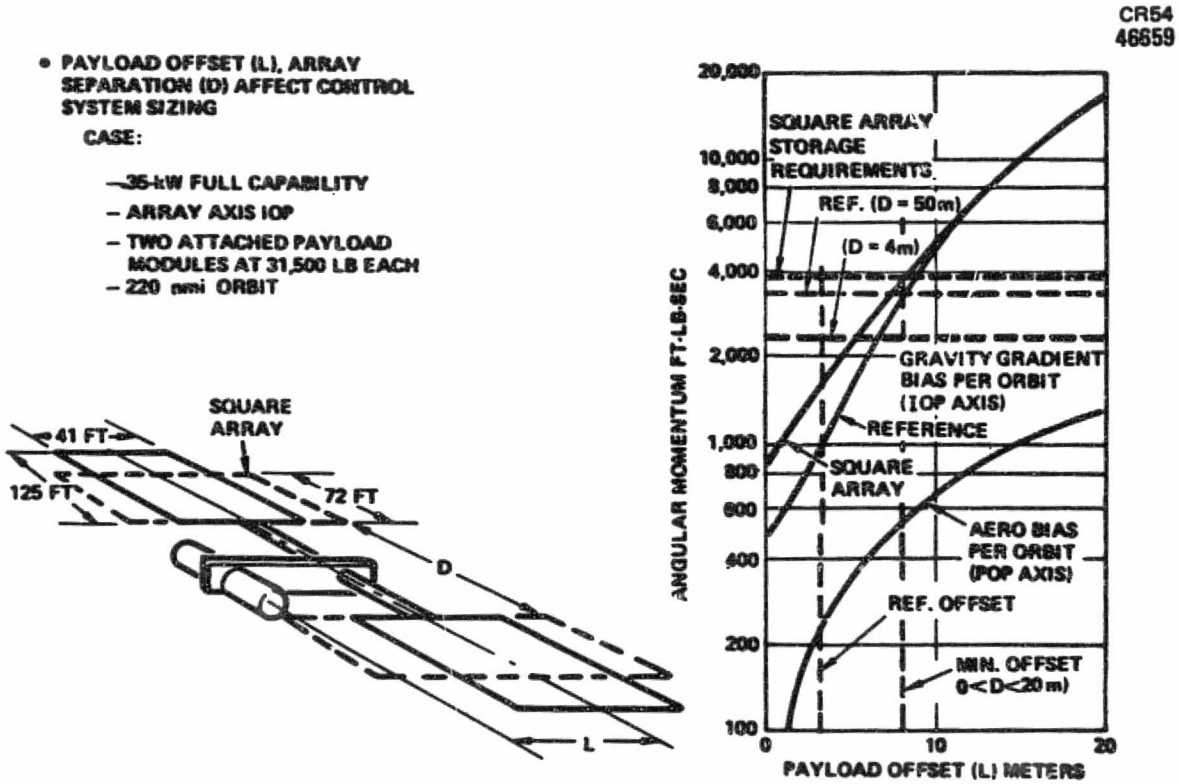

Figure 3-34. Effect of Configuration Geometry on Control Parameters

This figure assumed a symmetric array configuration with two 31,500 lb attached payloads as indicated. It also assumes that the center body can be gimbaled about two mutually perpendicular axes, one of which is coincident with the array's major axis. Momentum storage requirements and bias momentum buildup per orbit are then for "worst case" attitudes. It is noted that payload offset has a very strong affect on the bias momentum. Although eliminating the gap between the solar arrays reduces momentum storage requirements for the reference array from approximately 3,500 to 2,500 ft-lb-sec, it would force the payload to a minimum offset of about 8-9 m in comparison to the reference configuration's 3.65 m. This would increase the total bias momentum buildup (aero plus gravity gradient) from about 1,300 to over 3,000 ft-lb-sec per orbit. Thus, it may be concluded that concentration of the payload and OSM system masses close to the array center of area (and center of gravity) is a desirable design goal.

Also, the degree of control of the configuration, the orientation of the configuration in orbit, and the resulting power level are closely interrelated. To extract the maximum performance from the OSM system, at least two

gimbal sets (two degrees of rotational freedom) are required. One allows the array to track the sun for maximum power as the beta angle changes (±52 degree gimbal angle required for a 28.5 degree orbit). By increasing this from ±52 degree to ±90 degree, and adding a continuous 360 degree rotation gimbal on an orthogonal axis (e.g., about X, the axis perpendicular to the array longitudinal but in the plane of the arrays), full spherical coverage for payload viewing can be obtained.

When the vehicle Y (solar array) axis in the orbit plane and X perpendicular to the sunline, full power is obtained at all β angles with minimum control torques. To enhance earth viewing, POP orientations can be used, but at significant power loss occurs at high β angles. This can be partially compensated for by tilting the array axis out of the orbit plane (i.e., cross plane). With this technique, power loss is minimal (<10 percent) but control torques are greatly increased (approximately an order of magnitude). Alternately, hinge gimbals can be added to the array for POP-high beta operation or the vehicle may be flown IOP at high beta with only minimal power loss and no increase in control moments.

In summary, the configurations having mass and geometric symmetry are easiest to control and, because of bias momentum buildups, the best orientations from a control standpoint are those orienting the array axis of the configuration either parallel or perpendicular to the orbit plane. Without any gimbal systems the power losses in these orientations can be severe, however, with a two-axis gimbal system full power can be obtained, all attitude payload orientation is achieved, and the resulting control moments are reasonable.

3.2.4.3 Field of View Effects

Field of view effects for each concept are closely associated with orientation and control moment considerations. During this study, an analytical method was developed for assessing field of view performance for candidate configurations. Figure 3-35 illustrates the geometry of a typical earth-viewing situation. In this case, the symmetric type of configuration is shown. The computerized analysis provided the following critical characteristics valuable in assessing field of view relative merit: (1) percentage of

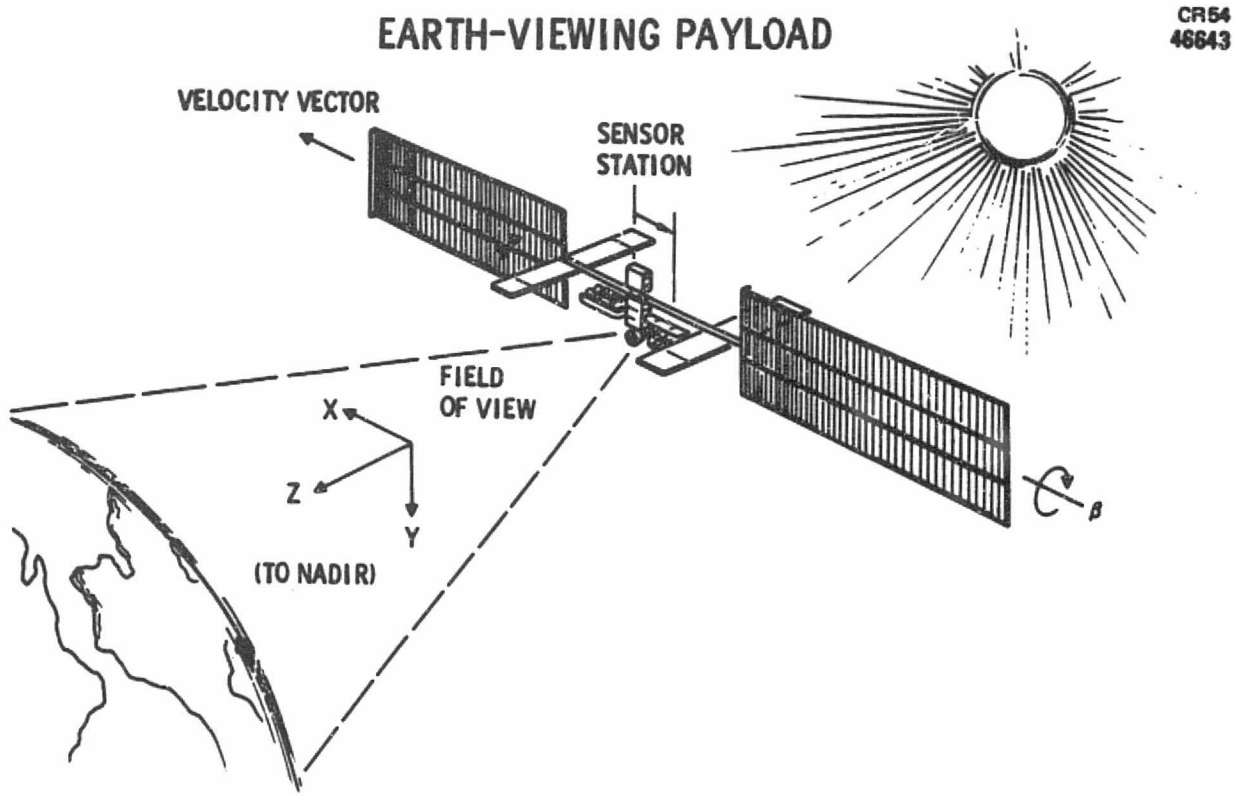

Figure 3-35. Field of View Effects

the hemispherical solid angle instantaneously obscured by the OSM major elements, (2) percentage of the hemispherical field of view subject to obscuration during an orbital angle, (3) shape of the obscurations, and (4) time required for the obscuration to sweep the field of view of the observer.

A sample of the results of these computations is shown in Figure 3-36. This illustrates the observations seen by an observer on OSM as he looks toward the nadir with the OSM traveling in a solar-inertial orientation, array axis in the orbit plane. Three glimpses of the obscuration are seen: one radiator as it enters the field of view, the edge-on view of one array wing and radiator as OSM passes the terminator, and a radiator as it leaves the hemispherical field of view.

To fully assess each configuration concept, the parameters of interest can be varied including configuration geometry, orientation, location of the observer (sensor) from the center coordinates, and viewing direction.

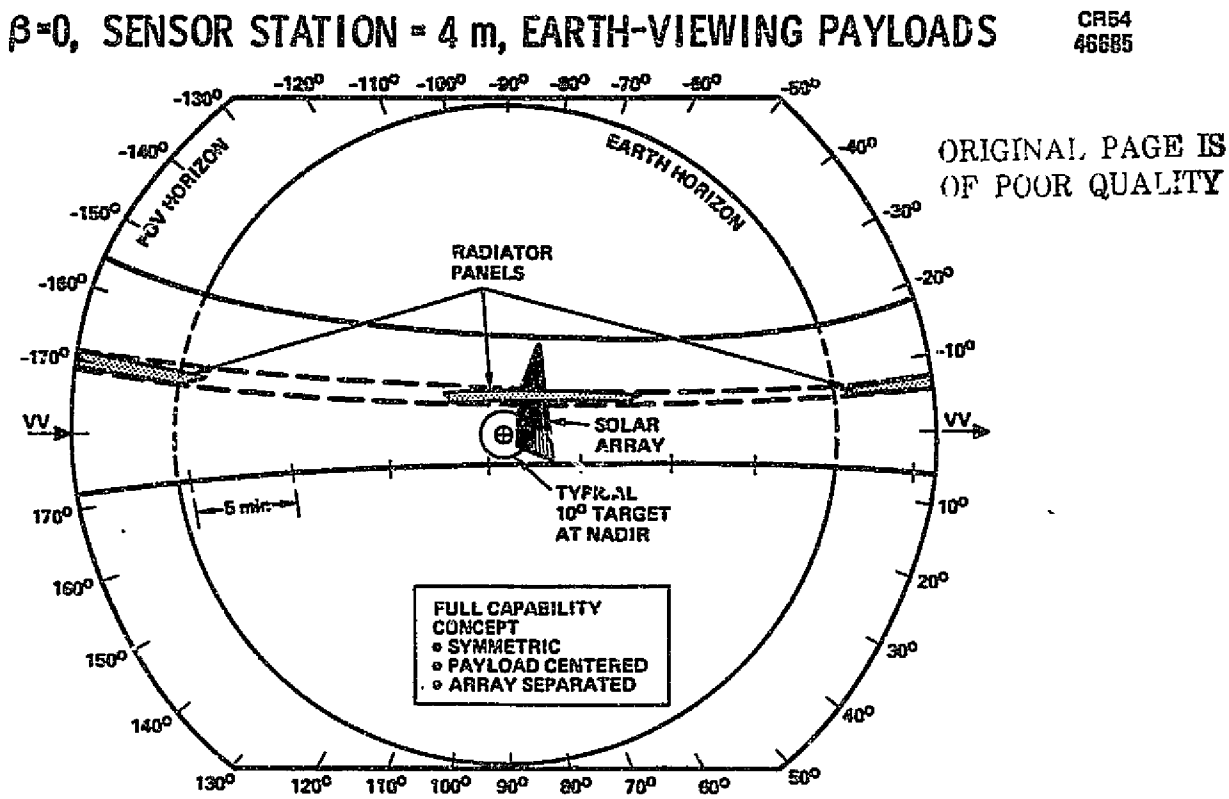

Figure 3-36. Sensor Field of View — OSM Concept 1

Figure 3-37 summarizes the results of the field of view studies using the three basic configuration geometries examined. Two combinations of vehicle orientation and viewing direction are shown for each of the three configurations.

Solar-inertial orientations obviously offer clear fields of view for solar observations and large unobstructed fields for celestial observations. With the array axis IOP, the OSM obstructs the field of view during earth observations. With the symmetric design this occurs twice per orbit as each half sweeps through the field. With the asymmetric, this occurs once per orbit. By orienting the array long axis (Y) across or perpendicular to the orbit plane, and aligning the body with the local vertical, a clear view of the nadir is obtained over the entire orbit. Of course, celestial viewing may be impaired. The extent of this is illustrated by the Concept 3 data.

OBSERVATION POINT 4 m FROM CENTER

CR64
46678

CONFIGURATIONS:

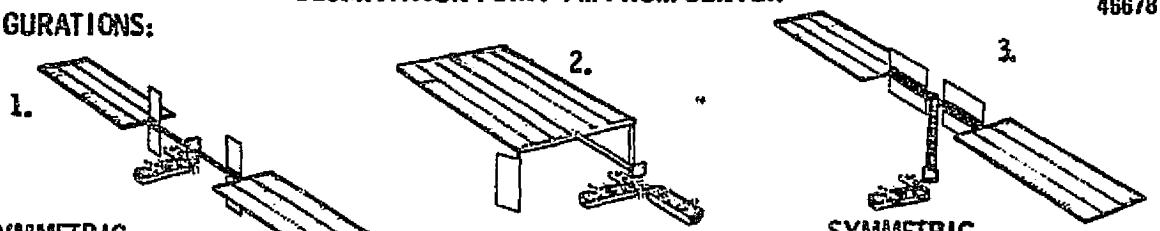

SYMMETRIC, SEPARATED WINGS PAYLOAD CENTERED

ASYMMETRIC PAYLOAD OFFSET

SYMMETRIC SEPARATED WINGS PAYLOAD OFFSET

CONFIGURATION/ ORIENTATION	TARGET	INSTANTANEOUS FOV OBSCURED	FOV SUBJECT TO OBSCURATION
1. SOLAR INERTIAL	EARTH	0.8% TWICE/ORBIT	22%
POP - LOCAL VERT	EARTH	0.8% TWICE/ORBIT (*)	11% (*)
2. SOLAR INERTIAL	EARTH	1.8% ONCE/ORBIT	55%
POP - LOCAL VERT	EARTH	0.8% TWICE/ORBIT(*)	7%(*)
3. POP - LOCAL VERT	EARTH	0	0
POP - LOCAL VERT	CELESTIAL	16%, ONCE/ORBIT	85%

(*) CAN BE REDUCED TO ZERO BY LOCATING OBSERVATION POINT FARTHER FROM ARRAY CENTERLINE.

Figure 3-37. Field of View Effects

3.2.4.4 Selection of Reference Configurations

From these analyses, the symmetric configuration offers reasonable viewing opportunities when operated solar-inertial (array axis IOP) if two gimbals are used to permit payload orientation. The asymmetric concept offers a wider unobstructed view angle and minimizes probability of reflected radiation entering the field of view. The gravity gradient concept offers excellent earth viewing but has major obstructions for celestial observations.

After each of the configuration concepts had been analyzed and evaluated, a number of salient conclusions were made concerning a choice of a full-capability Power Module to be used as a reference model for subsystem analysis and comparison:

- All mission requirements can be accommodated.
- Symmetric configurations possess the desirable features of minimal bias moments when the array axis is oriented in the orbit plane and minimal CMG size due to balanced aerodynamic moments.
- A separation area between the solar array wings provides adequate

ORIGINAL PAGE IS
OF POOR QUALITY

rendezvous and departure plume clearance, increases payload field of view, and allows a central mass cluster which minimizes bias moments.

- A two-gimbal system allows full power in all attitudes desired for the orientation of the module.
- Both in-orbit plane orientation and perpendicular to the orbit plane orientation can be used when desired.
- A mass balance is needed on all concepts to minimize CMG desaturation requirements.

3.2.4.5 Features of the Full-Capability Reference Configuration

The results of the preliminary tradeoff studies led to the selection of the full capability reference configuration shown in Figure 3-38. The following are the salient features of this configuration: (1) it possesses 35 kW of regulated power available to the user at end of life and 42 kW of unregulated high voltage necessitating six PEP-type solar array wings 36.3-m-long by 4-m-wide; (2) it is a symmetric type configuration with a centrally located subsystem and payload core and with 25-m-long standoff booms to separate the array wings away from the core; (3) two radiators provide a heat rejection capability symmetrical to the power output.

CR54
46679

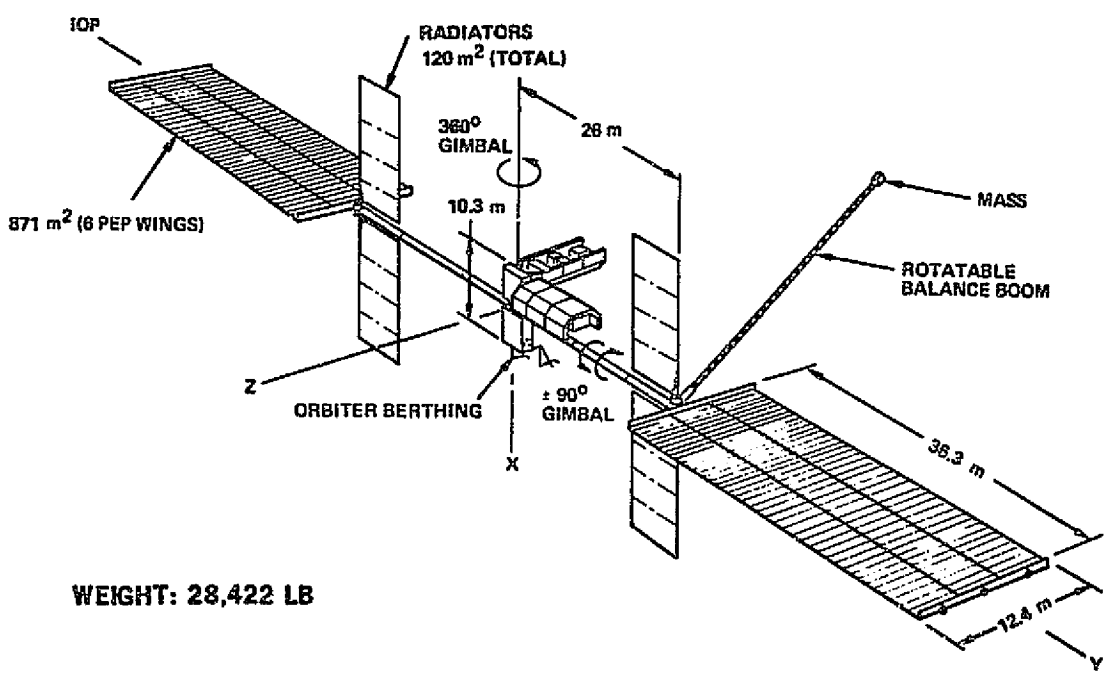

Figure 3-38. Full-Capability Reference Concept

The full-capability core body features are shown in Figure 3-39 consisting of two rectangular (1.25 x 3.8 m) structures 5.45 and 3.95 m-long joined by a 1-m-long cylinder 1-m-diameter. This is the base for the solar arrays orbit gimbal and supports the entire solar array structure. The basic structure is a perimeter frame having a semi-monocoque box section 1.25-m-deep and 0.15-to 0.3-m-thick. One face of the perimeter frame has an isogrid shear panel supporting an insulation blanket. The exterior surfaces of the perimeter frame supports many subsystem features that follow.

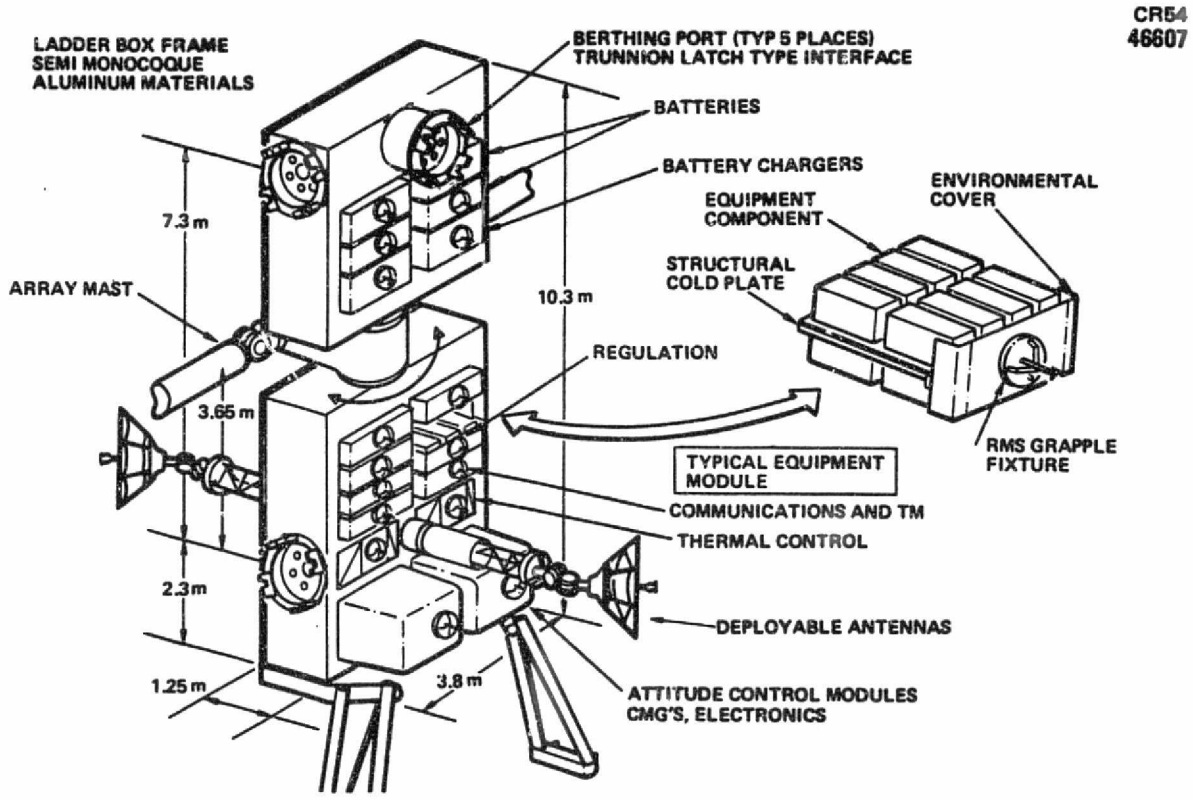

Figure 3-39. OSM—Full-Capability Concept Core Body

All payload berthing ports and all subsystem installations are accessible to RMS reach from the Orbiter's berthed location. The Orbiter berthing structure is offset from the subsystem core vertical axis to facilitate operation of the RMS arm. The berthing structure possesses standard trunnions which will attach to normal orbiter payload attachment fittings.

The total reference OSM power module weighs 28,522 lb (12,893 kg) (Table 3-10). The structure/mechanical is approximately 25 percent of

Table 3-10. Full-Capability Reference OSM Power Module

Description	Weight
Solar array	2,950
Structure/mech	7,022
Module structure assembly	2,883
Gimbal/hinge assembly	1,331
Counter balance	2,028
Berthing provisions	780
Power distribution and regulation	11,395
Thermal control	4,416
Avionics	2,639
Instrumentation	213
Attitude control	1,987
Communication/data management	439
Total weight (lb)	28,422

the total weight and includes a 52-m mast with a ±90 degrees and a continuous rotational gimbal. The equipment housing contains all equipment internally and provisions for five payload ports and one orbiter.

The solar array is 6 wings for a total of 288 panels and 9,372 ft^2 (871 m^2) for approximately 6.5 percent of the total weight.

Power distribution and control is approximately 40 percent of the total. Major elements include eighteen 28-V regulators, two shunt voltage limiters, twelve batteries, six chargers and power control units (PCU's) plus distribution cabling of 1,644 lb (764 kg).

Thermal control is 15.5 percent of the total launch weight with the 1,300 ft^2 (120 m^2) four panel radiators being three quarters of the thermal control. This weight includes four pump packages, six interface kits, two accumulators and associated fluids and plumbing. The equipment thermal control includes provisions for 250 ft^2 (23 m^2) of cold plates.

The avionics are approximately 9 percent of the total. Included is the instrumentation and associated control electronics and wiring. The attitude control includes four CMG's and inverters, an inertial measurement unit (IMU), and two sun sensors. Some key elements of the communication data

management are the high-gain antenna system and the 10 Mbps data management system plus associated recorders, multiplexers, RIU's, etc.

3.2.5 Subsystem Definition for the Full-Capability Reference Configuration and a Limited Configuration

The following sections describe the main subsystems for the full-capability configuration and indicate either the changes to, or define the concept for, the limited configuration. The major subsystem trades and conclusions are also discussed. These subsystems include (1) structural/mechanical subsystem and its power module stowage and deployment, (2) the electrical power subsystem, (3) thermal control subsystem, (4) avionics, guidance and control subsystem, and (5) communications and data handling subsystem.

Comparisons will be made throughout the subsystem sections related to the basic full-capability reference configuration previously described and a limited more austere capability configuration illustrated in Figure 3-40. The basic features of this concept consist of a 35 kW unregulated power output at beginning of life, thereby necessitating only four PEP solar array wings, a fixed radiator, a two-axis gimbal system, four payload berthing ports and one orbiter port.

CR64
46638

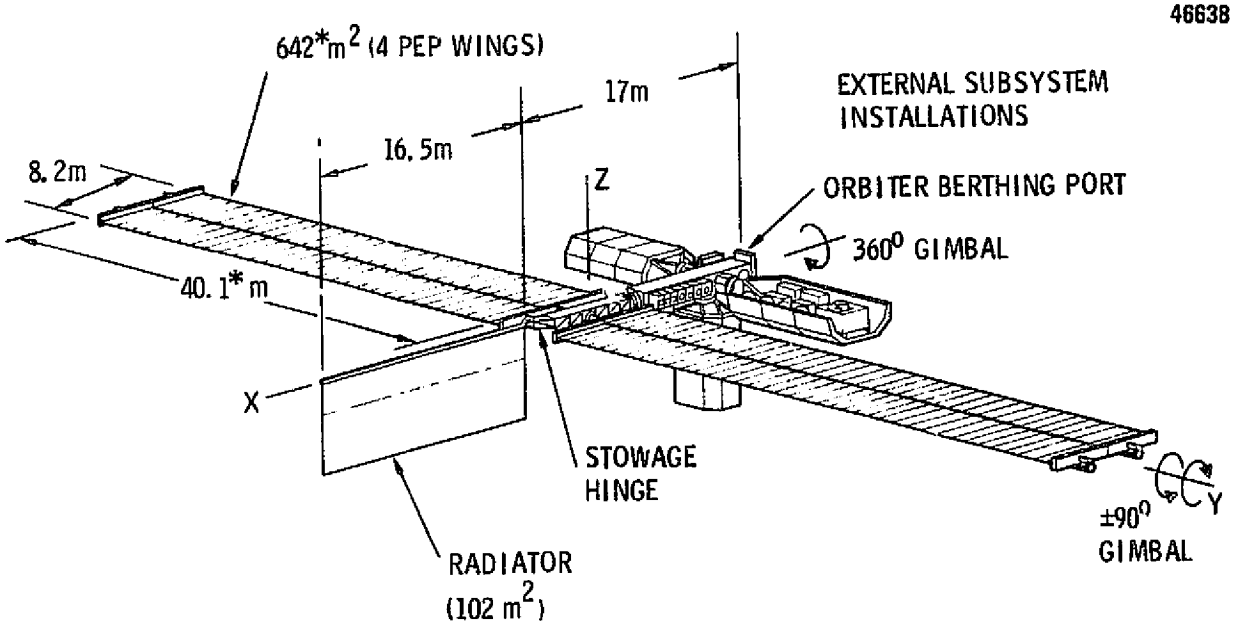

* SOLAR ARRAY BLANKET

Figure 3-40. Limited Capability Concept

ORIGINAL PAGE IS OF POOR QUALITY

3.2.5.1 Structural/Mechanical Subsystems

The major structural elements of the reference configurations can be reduced to a few substructures: core bodies, standoff or separation booms and equipment support structures. The significant mechanical systems include gimbals, rotating fluid joints and optional berthing port equipment. The two reference configurations utilize different structural concepts which are related to their compaction technique for Orbiter stowage.

Full-Capability Power Module

Requirements and Constraints – The structural/mechanical subsystems provide the basing structure for mission and experiment (user) equipment in providing launch support and providing the appropriate placement and orientation on orbit. The basic requirements for the structure is to provide the framework for the specified configuration, to accept and distribute the launch loads, to provide natural frequency and dynamic characteristics compatible with control requirements, and to provide the mechanization to convert from an Orbiter transportable configuration to the on-orbit operational configuration.

The most significant force loads on the general structure is the result of launch phase environment which is typically the design case. The exception to this is the solar array mast and standoff booms whose design case is driven by their dynamic response (when deployed on orbit) to maneuver or reboost loads.

Summary of Trades and Analyses – Aside from the various trades which are configurational in nature and reflected previously, the structural/mechanical efforts included:

- Mast design types
- Gimbal systems
- Rotating fluid joints
- Berthing port design and kits

Mast and boom trades examined folding, telescoping, and collapsible structures. The collapsible concepts included both coilable and articulated

longeron truss beams. Two areas of interest were masts for solar array blanket deployment and array standoff booms. The analysis for the array mast indicated the collapsible truss beam as a preferred candidate. Early in the study when the mast was sized to a bending moment comparable to the RMS wrist capability, the best selection was an articulated longeron concept; however, control system goals lowered the design stiffness parameter which resulted in a preference for a coilable longeron truss beam mast. The array standoff booms were sized and selected as tubular structures with both folding and telescoping concepts. Stowage configuration considerations, simplicity of hinging and the ease of installing the array power and command wiring on the booms substantially supported the selection of hinged boom structures.

Gimbals were examined as an integral part of the OSM body and as an interface kit to be used at the berthing ports and either left in position on the OSM or flown (ascent/descent) as a kit part of the payload (as required). Gimbal degrees of freedom required were related to the orientation flown by the OSM, its configuration, and the serial or simultaneous payload viewing requirements. It was found for the OSM configurations that, whether the gimbal is an integral body device or a payload interface kit, one continuous rotation gimbal (orbit rate) and one limited motion hinge gimbal can satisfy all attitude viewing requirements.

The configurational distribution of thermal sources, thermal control system components, and radiators for a singular system requires coolant to be passed across at least one rotating (gimbal) interface. A design concept was generated for a redundant loop (four-manifold joint). The design goal was to minimize dynamic seal problems and to provide a means of on-orbit seal maintenance without significant loss of coolant during seal replacement.

Berthing port design was evaluated for concept, both symmetrical (androgynous) and asymmetrical (with active parts on either payload or the OSM side of the interface). The effort evolved an interface concept and an associated family of interface gimbal kits.

Subsystem Description and Features – The full-capability concept is principally characterized by the use of long booms for supporting the solar arrays

away from the core body. The overall configuration and detail description of core body was presented in Section 3.2.4.5.

The boom length, approximately 26 m, provides swing clearance for the longest anticipated payload berthed on the core body from the radiator panels which are located on the boom side of the array wing support point of the boom. Analysis has determined an order of preference for candidate boom structures (folding, telescoping, coilable) based on complexity of wire cable and fluid line installations and Orbiter in-bay stowage concepts for OSM. Candidate boom structures of aluminum and composite full skin cylinders and composite open lattice cylinders were considered. With the low, natural frequency goal of the entire array wing (near 0.02 Hz), the composite open lattice cylinder looks favorable. Also, the open lattice provides the least amount of boom (and array wing) flexure due to solar heating caused by day-night orbit phases. The open lattice allows a degree of solar illumination of both sides of the boom for a lower cross diameter thermal gradient than a full web cylinder.

The full-capability OSM has the orbit drive gimbal centrally located in the core body while the limited capability OSM concept places that gimbal on the end of the core body. A pertinent difference is that the full-capability concept gimbal must provide structural fixity to core body portions on each side, and this complicates the design of the radiator fluid interface between the core body and the array booms. The beta axis gimbals for both reference concepts are co-axial with the array wing or boom and may be virtually identical except that the full-capability is integrated into the array standoff boom base. The loads and drive rates of both gimbal systems are slow and have only moderate precision requirements. Simple pinion driven ring gear concepts should suffice.

The study has evolved the concept of a family of berthing port kits for the payload ports of the OSM. Figure 3-41 summarizes these kits which have the basic fixed port elements (payload retention/support latches, a driven umbilical plate and the connectors for electrical and fluid services across the interface) in a bolt-on structure. Also included are port interface adapters to provide two different levels of gimbal capability for a payload at any

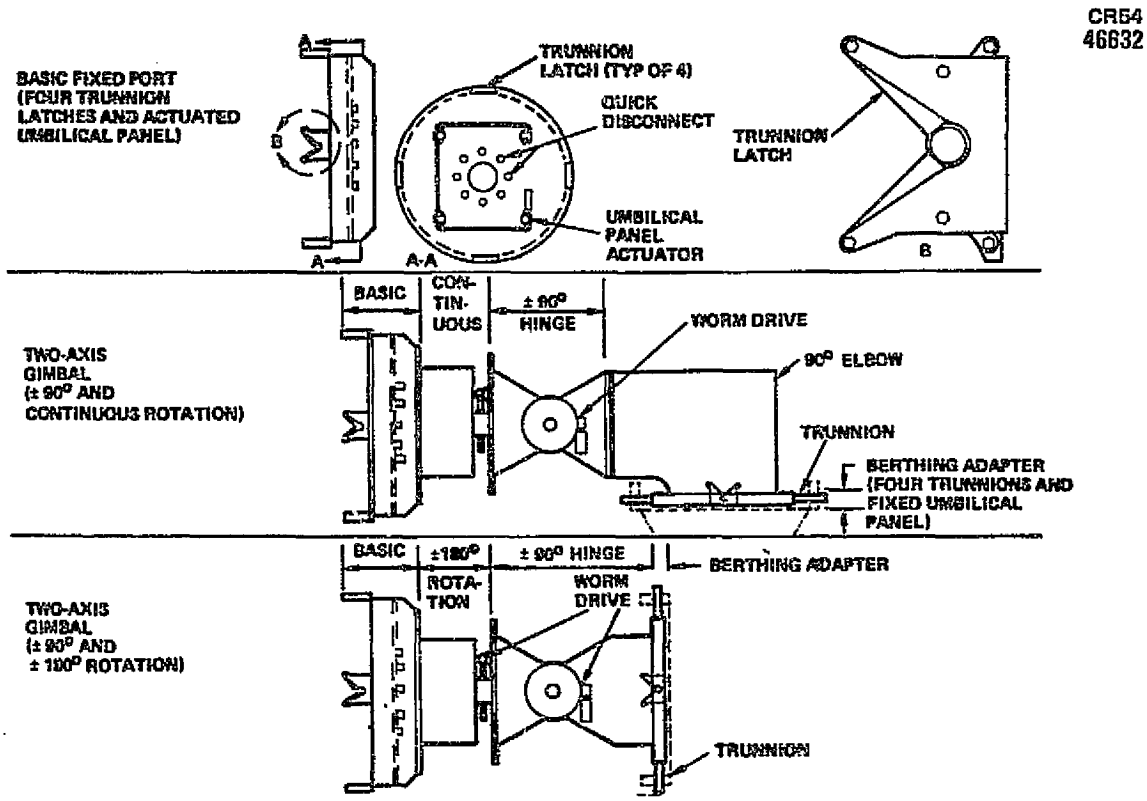

Figure 3-41. Modular Gimbal Design Concept

given OSM berthing port. The adapters would be delivered as required as part of the payload.

The concept for OSM berthing with the Orbiter consists of a set of folding legs which place the OSM body over the Orbiter cabin (for RMS kinematic freedom) while interfacing payload retention hardpoints on the Orbiter's doorsill in the same manner as a payload. One leg would incorporate an umbilical interface with the Orbiter.

Most OSM concepts examined during the study, including the two reference configurations, placed the radiator panels in conjunction with the solar array wings. This location requires that the working fluid of the thermal control system be moved across at least one continuously rotating gimbal. Since the success of the concepts is related to this requirement, a concept for an easily maintainable fluid rotating joint was developed. The complexity of this joint is compounded by the need to provide for at least four lines (inlet and outlet for redundant loops). Figures 3-42 and 3-43 show this joint in its operational position and in its seal maintenance position.

ORIGINAL PAGE IS
OF POOR QUALITY

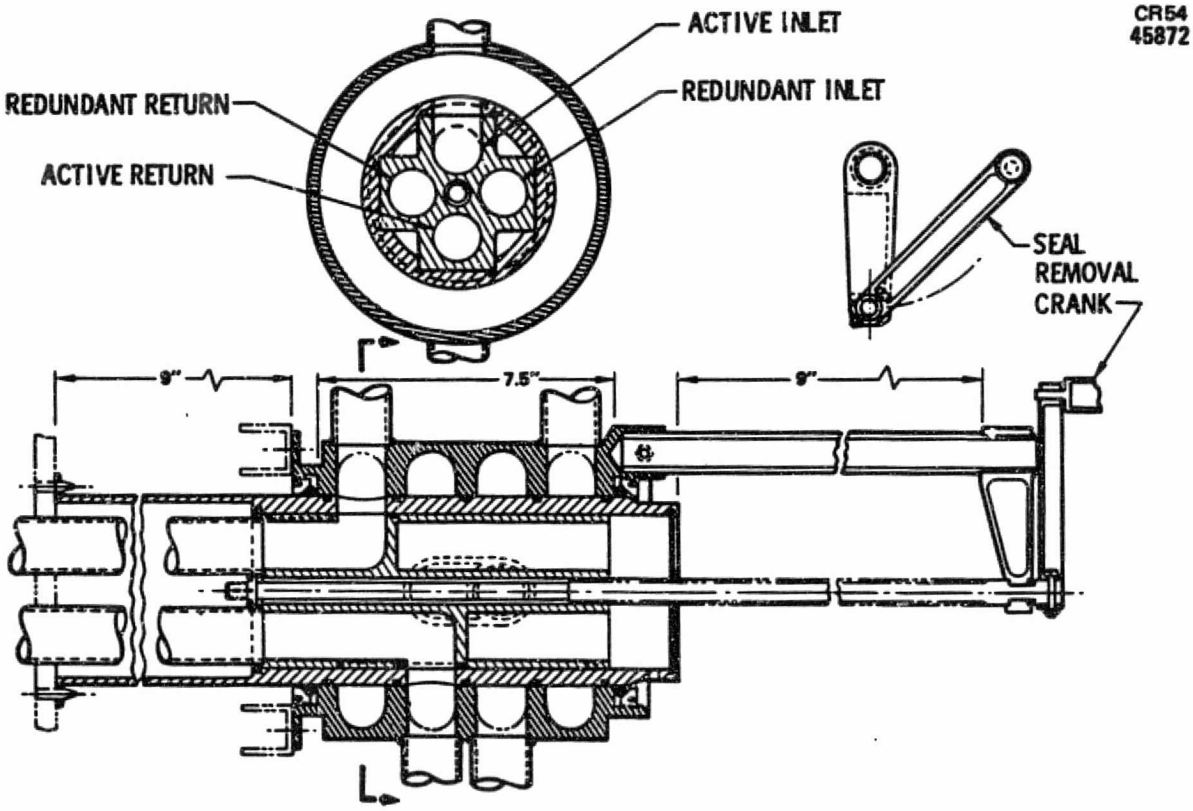

Figure 3-42. Rotary Fluid Coupling Operating Position

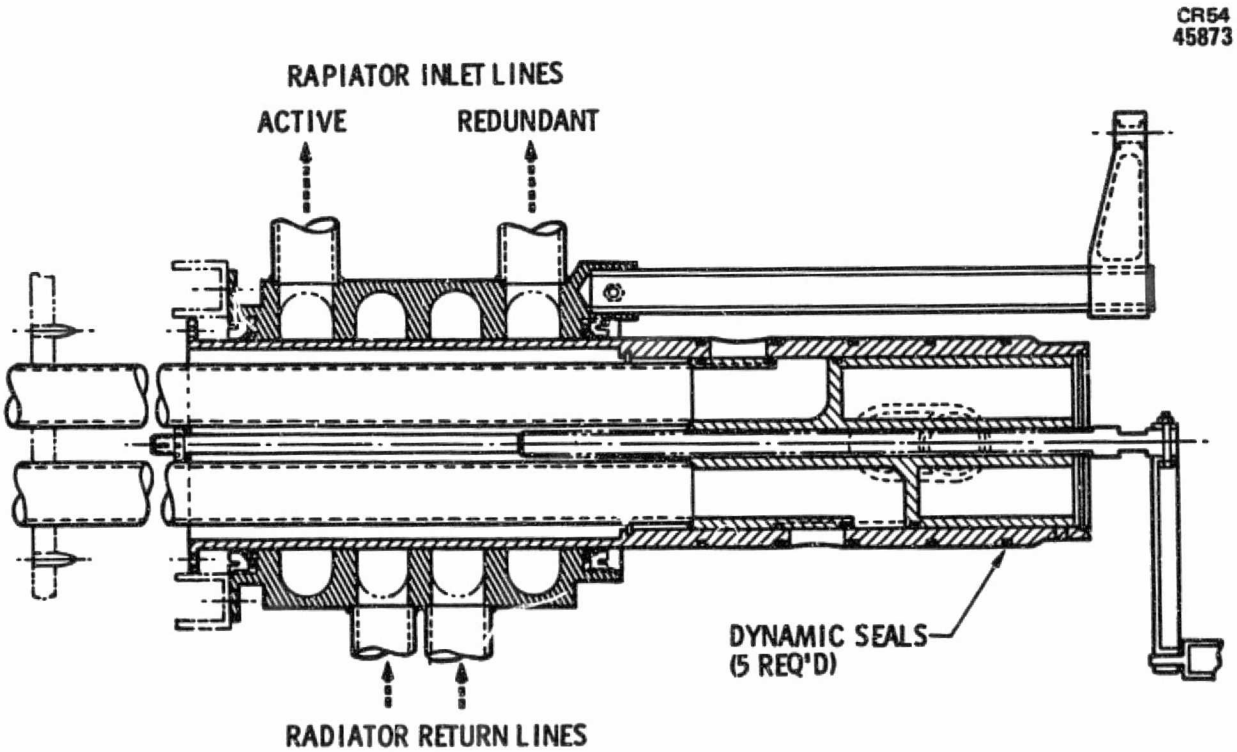

Figure 3-43. Rotary Fluid Coupling Positioned for Seal Replacement

Limited Configuration

Requirements and Constraints – The limited or austere capability configuration differs most significantly by the direct mounting of the solar array assemblies on the OSM core body as is also the radiator (see Figure 3-40). This approach dictates a much longer core body than is seen in the full-capability configuration. The requirements and constraints for this concept is essentially the same as for the full-capability concept except that various subsystems have been scaled downward.

Summary of Trades and Analyses – The trades and analyses which supported the full-capability concept is also generally applicable to this concept, and no analysis peculiar to the limited concept was done.

Subsystem Description and Features – The limited configuration is characterized by scaled down subsystems and direct mounting of the solar array and radiator on the end of the core body. Of the structural/mechanical subsystem elements, the core body is different from the full-capability concept but the gimbals, berthing ports and Orbiter berthing fixtures are essentially the same.

The core body consists of a hybrid semi-monocoque and truss beam with a 1.5-m square cross section and 8-m long. On one end is a continuous rotation (orbit rate) gimbal supporting an 8-m long truss beam to which the solar array wings and the radiator are mounted. The solar array wings are attached with a gimbal having a plus or minus 90 degree travel. The main core body has framing and interface provisions to mount the subsystems equipment externally on their cold plates.

3.2.5.2 Power Module Stowage and Deployment

OSM concepts studied have ranged from minimal to extensive amounts of articulation to deploy the various configuration elements from their Orbiter stowage package. The two reference configurations represent a minimal and a moderate articulation case. The Orbiter stowage packaging concepts are significant configuration drivers and proportion several elements of the system.

3.2.5.2.1 Full-Capability Power Module Stowage Concepts

Requirements and Constraints – The requirements and constraints placed on transport packaging are almost entirely derived from the Orbiter and its launch environment. A summary of Orbiter constraints include:

- Allowable payload envelope including OSM dynamic excursions
- Center of gravity limits
- Standardized payload support locations
- Standardized payload support mechanized interfaces
- Orbiter quasi-static and dynamic environments
- Launch abort and emergency (crash) landing survivability
- RMS grappling accessibility

Operationally, the packaging design is constrained by the selected deployment mode which, in this case, is by fully automated release, articulation, latching and functional initiation. Articulation sequences and dynamic geometries must also be considered.

Summary of Trades and Analyses – No stowage peculiar trades or analyses were performed other than the layout development and variations from which the presented configuration was selected. The packaging configuration and the operational configuration are a mutual effort.

Subsystem Description and Features – The following is a description of the OSM in its packaged configuration and the companion description of its on-orbit deployment.

Full capability is configured for Orbiter stowage by folding the array standoff booms in three segments to locate the array box beam over the core body opposite the subsystems installation, see Figure 3-44. To fit the radiator panels into the folding approach, they are mounted on the boom adjacent to the array beam hinge and fold parallel to the boom upright between the boom and the array beam. The core body is rectangular and oriented flatwise across the Orbiter bay, and its width requires only a fitting to mount the trunnions which interface the Orbiter's payload retention fittings. A strut truss on the back side of the orbit drive gimbal interfaces the Orbiter's payload yaw fitting.

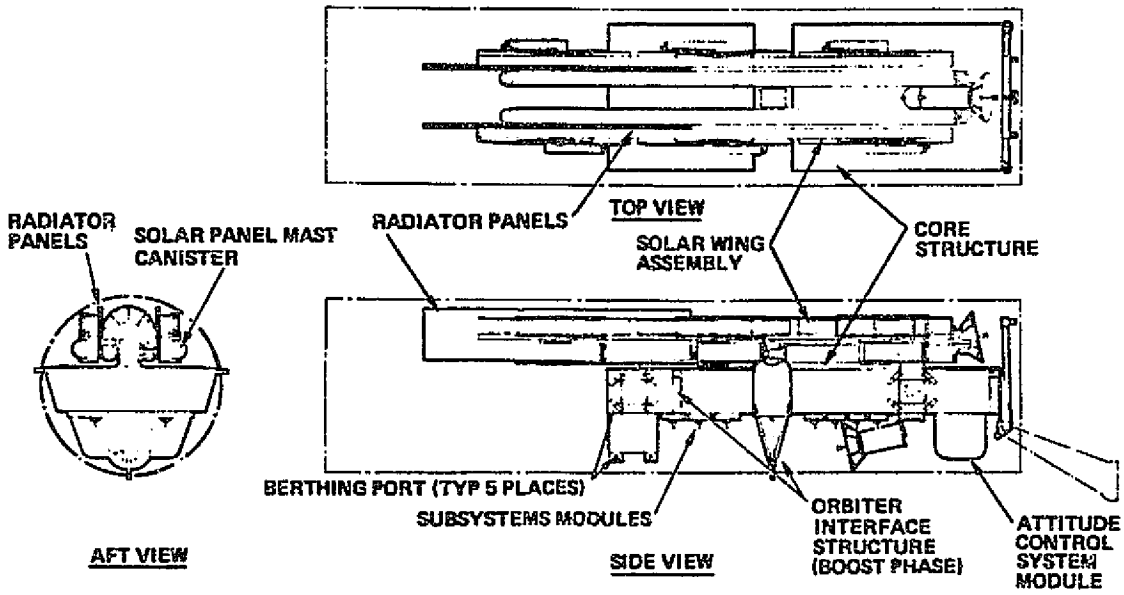

Figure 3-44. Orbiter Stowage – Full-Capability Concept

The deployment of the full-capability OSM Power Module is illustrated in Figure 3-45. It starts by grappling the Power Module with the Orbiter RMS and removing it from the cargo bay then unfolding the Orbiter interface legs and berthing the Power Module over the cabin on the forward payload retention fittings. The Orbiter interface umbilical on one of the Power Module's legs is engaged and the Power Module systems are checked. The radiator and array beam support-restraints are released and the three-segment standoff booms are extended via a cable system simultaneously driving the boom hinges allowing the array beams to translate without changing their orientation. Both radiator panels are mounted on a common pivot trunnion on the same side of the end of the boom. The outer panel lying along the boom is first rotated 180 degrees about an axis parallel to the boom and then pivoted 90 degrees until normal to the boom on the sunside of the array. It is then unfolded towards the core body. The remaining radiator panel is simply pivoted 90 degrees until normal to the boom and similarly unfolded on darkside of the array. The solar array blankets are then extended.

ORIGINAL PAGE IS
OF POOR QUALITY

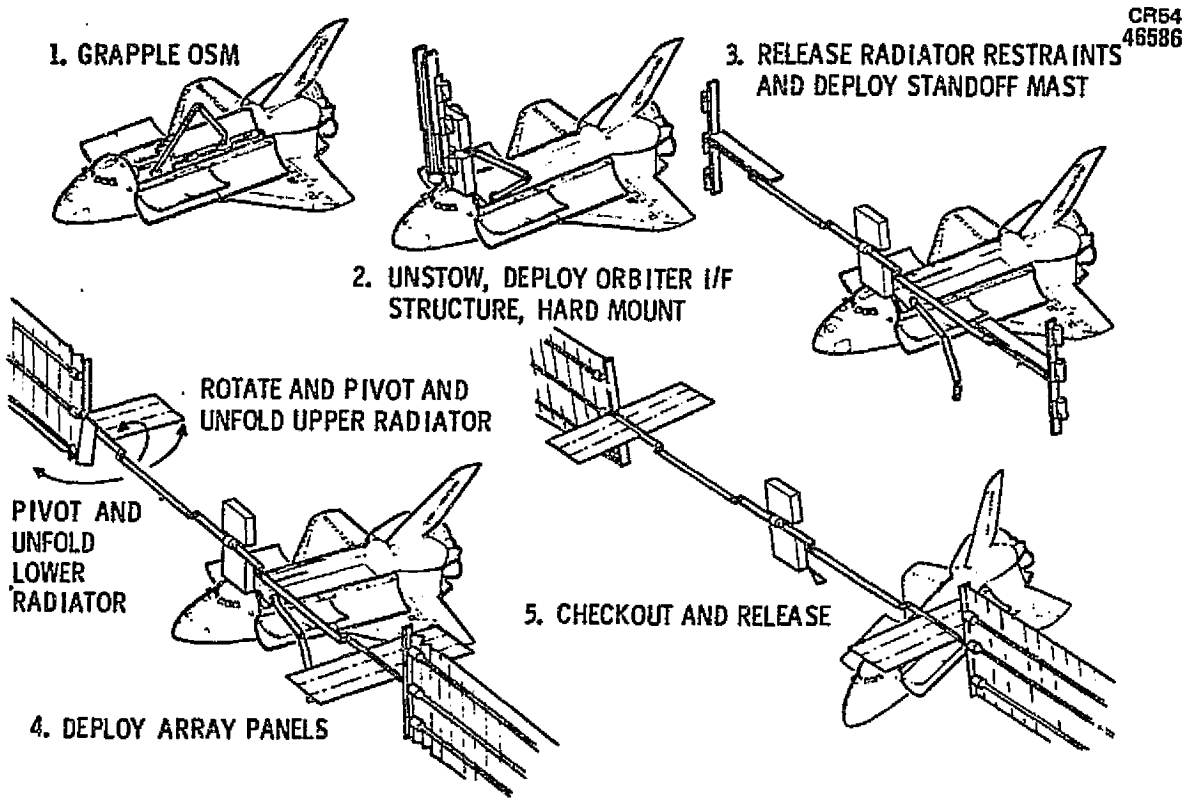

Figure 3-45. Power Module Deployment

3.2.5.3 Electrical Power System

Requirements and Constraints

The EPS must be capable of delivering 35 to 40 kW average power to specified load interfaces (payload berthing port umbilical connectors) after five years of on-orbit operation. The total power may be used at a single payload port with no other payloads berthed, or divided between payloads simultaneously docked at different berthing ports. In addition, the EPS must supply parasitic loads of approximately 2.12 kW for radiator pumps, CMG's, and miscellaneous instrumentation and control.

The EPS umbilical connectors must be de-energized when mating or demating interface power circuits.

System Description - Full Capability Configuration

The full-capability OSM electrical power system (EPS) is designed to deliver a nominal 35 kW at 28 volts direct current (VDC) or 40.5 kW at 113-168 VDC

(End-of-Life, EOL) to the user subsystems after five years of on-orbit operation. The power system consists of the solar arrays, NiCd batteries, battery chargers, voltage regulators (28 V, nominal) and the power distribution and control network. The block diagram of the EPS is shown in Figure 3-46, which illustrates the major components, the operating efficiency, voltages, system output power levels (EOL and Beginning-of-Life [BOL])and the required number of units. The power and types of power delivered to the payload ports for the full-capability system were developed from payload requirements and cost/performance trades, and are shown in Table 3-11.

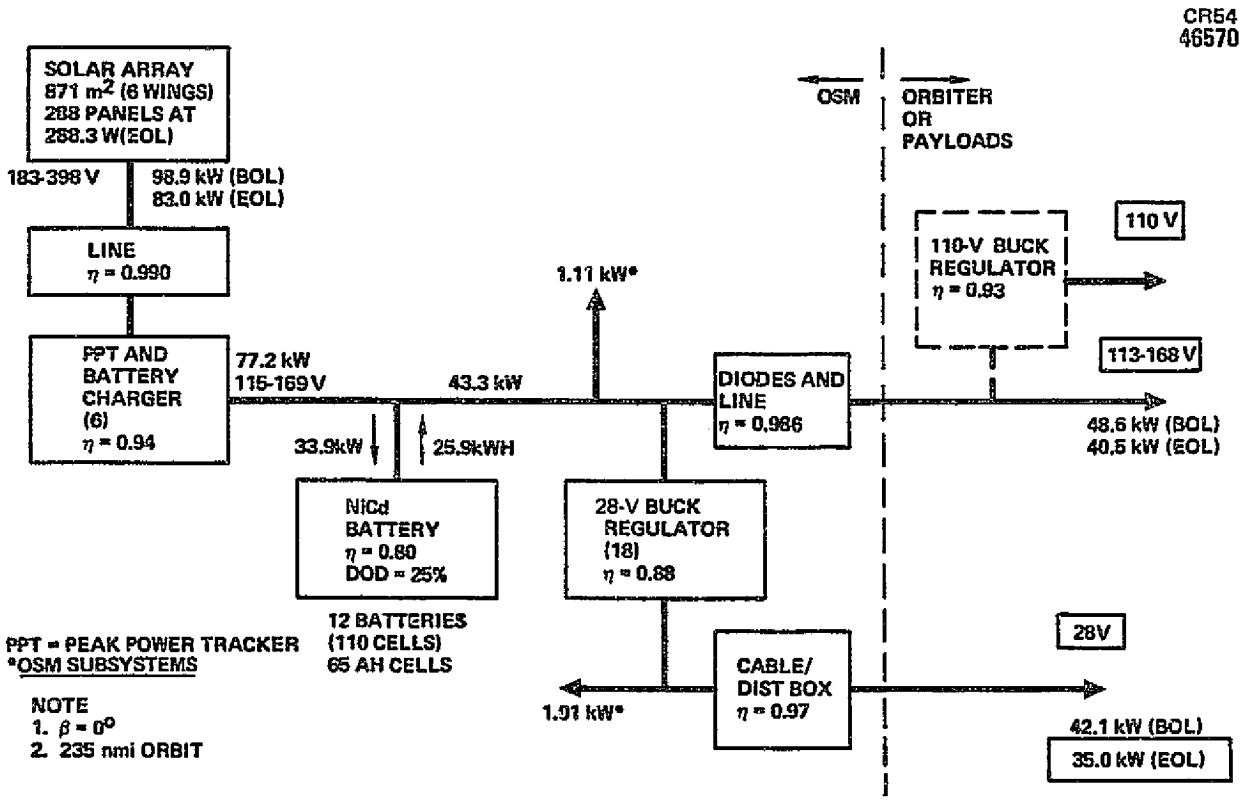

Figure 3-46. OSM Electrical Power System Block Diagram (Full-Capability System)

Table 3-11. Power Delivered to Payload Ports

Port Number	28 VDC	113-168 VDC	113-168 VDC Peaks
Orbiter	28	0	--
2 Ports	35	40.5	128 for 30 min
3 Ports	15	40.5	--

The solar array is solar-oriented and consists of six wings, each almost identical to the PEP design (three panels added, end of five-year configuration). The array has a power of 98.9 kW when launched and 83.03 kW output after five years of on-orbit operation. The array is made up of 288 panels and each panel has six strings of 510 cells in series (versus 10 strings of 306 series cells for PEP) to produce a peak power voltage of 183 VDC. The array open circuit voltage is 398 V at sunrise because of the low array temperature. The array operating temperature is 60°C at the design power rating. The peak array temperature is 70°C and the minimum array temperature during eclipse is -70°C. Each panel has 3,060 silicon cells, 8-mils-thick and 2 x 4 cm in size. The solar cells are 2 Ω-cm hybrid cells rated at 12.9 percent efficiency at 28°C. A 6-mil fused silica cover glass is used on the cells. The area of the array is 871 m^2 and the six wings are each 4-m-wide by 36.3-m-long.

Figure 3-47 illustrates how regulated 28 VDC and 113 to 168 VDC power is developed and made available to the payloads. Power from each solar array section is fed directly to the high-voltage switching box. This unit provides

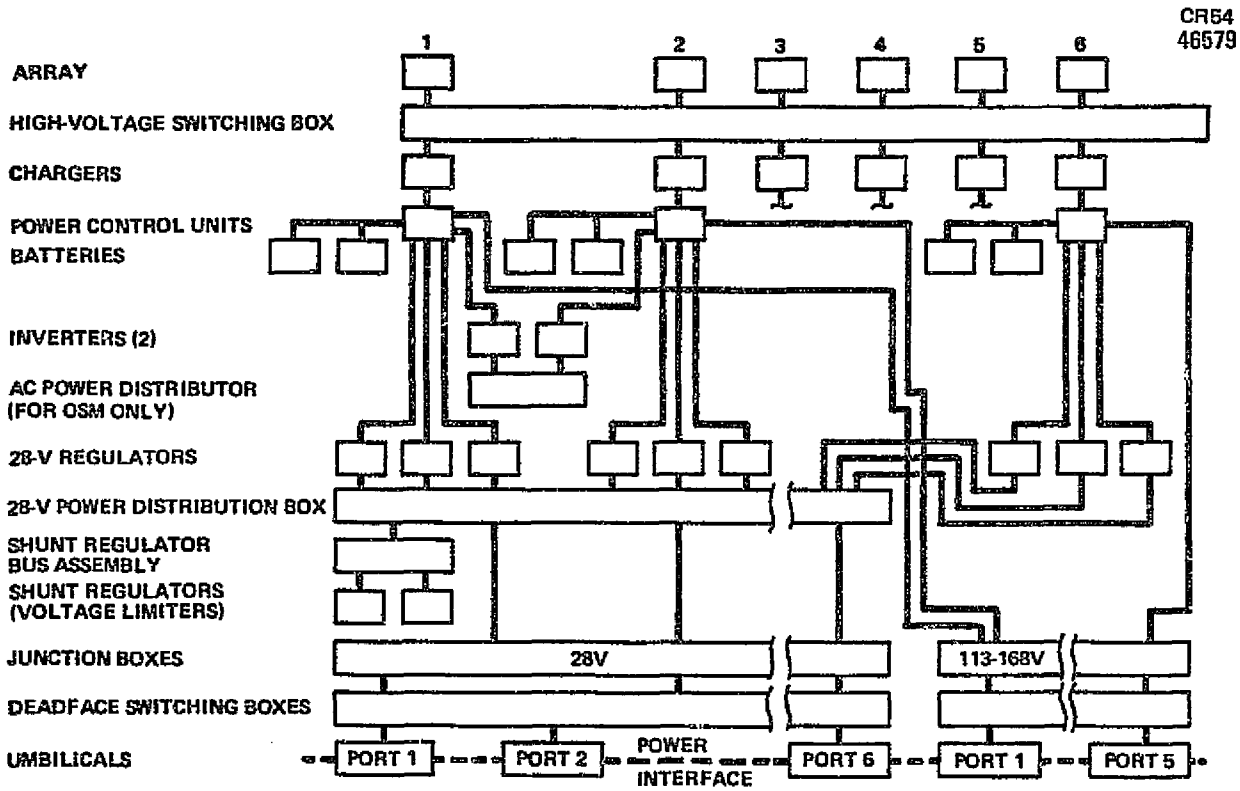

Figure 3-47. OSM/Orbiter/Free Flyer Power Distribution Arrangement

cross-strap switching of array sections and chargers for contingency modes of operation. Under normal operating conditions, power from each array is supplied to its associated charger where it is conditioned for delivery to a PCU. The PCU distributes charger output power to batteries, 28-V regulators, and the intermediate voltage (113-168 V) junction box.

Regulated 28-V power is developed by the 28-V regulars, which steps down the intermediate voltage (113-168 V) output from the PCUs for delivery to the 28-V Power Distribution Box (PDB). The PDB contains buses, switches, and instrumentation which provide the basic flexibility for the 28-V power distribution system.

Final busing and distribution provisions for 28-V power and 113- to 168-V power prior to delivery to the load interfaces are accomplished in the junction boxes and deadface switching boxes. The latter provides for deenergized mating and demating of power circuits at the berthing port interface umbilical panels.

The weight of the major EPS assemblies are shown in Table 3-12.

Table 3-12. Power System Weight

Assembly	Weight (lb)
Solar array assembly	2,950
Batteries	7,200
Power conditioning	2,067
Power distribution and control	484
Cables and wires	1,644
Total	14,345 lb

Major Trade Options

Trades were performed to establish (1) OSM output voltage, (2) solar array voltage, (3) regulator/charger type, (4) battery charging approach, (5) battery switching (day/night) configuration, and (6) power distribution to berthing ports.

Trade Factors and Decisions

Several candidate voltage levels were considered in defining the power to be delivered by the system. The first requirement is for 28 VDC because of Shuttle compatibility and the predominance of equipment now designed for this voltage. A number of users have expressed an interest also in higher voltage for new payloads; a voltage level of approximately 110 VDC is considered reasonable considering OSM and user system efficiency, the potential availability of components and compatibility with reasonable OSM solar array/battery power sources.

A wide variety of voltage and OSM EPS configuration options exist; these are summarized in Table 3-13 along with the pros of each option. The selected options are shown in a box. The 113-168 VDC option is compatible with regulated 110 VDC via a user provided PWM buck regulator that is basically common with the battery charger and 28-V regulator. This system requires an array with 183 VDC at maximum power and 398 VDC (cold, open circuit). These voltages are higher than the PEP array, 115-239 VDC. The use of the PEP voltages results in 65-101 VDC output and requires a user boost regulator (with the attendant loss of commonality) to obtain regulated 110 VDC. Array voltages higher than 398 V were not considered because of battery charger component (e.g., power transistor) limitations.

The full capability system battery is sized for an energy requirement of 25.9 kWh as noted in Figure 3-46. It is sized for 65 AH cells, the usable capacity of the Eagle-Picher RSN-55-3 cell. System voltages dictate on the order of 110 cells per battery for which the extreme discharge and charge voltages are 115 and 169 V, respectively. The 110-cell battery consists of five battery modules of 22 cells each. The battery life is two and one-half to three years; the nominal replacement period is two and one-half years, which yields an integral number of batteries for either a five- or ten-year mission duration. Twelve batteries are required and this number is compatible with six chargers, 18 voltage regulators and six circuits to the payload ports.

Table 3-13. OSM System/Power Conditioning Options

Option	Pros/Remarks
OSM output voltage	
• Regulated 28 VDC	Shuttle and early payloads require 28 V
• 113-168 VDC	Compatible with regulated 110 VDC via buck regulator; high efficiency; small conductors
• Regulated 110 V	Proposed high-voltage strandard; user provided regulator
• 72-127 VDC	Efficient buck system for raw power with 141 V array
• 65-101 VDC	Use PEP array; requires boost regulator for 110 V
Solar array voltage	
• 115-239 V	SEP and PEP blanket configuration
• 141-293 V	Reasonable output (72-127 V) with moderate voltage array
• 183-398 V	Regulated 110 VDC with high efficiency and all-buck regulator commonality
Regulator/charger type	
• Buck	High-efficiency system and good commonality
• Buck/boost	Required for some schemes with 115- or 141-V arrays and regulated 110-V output
• Boost	Same as buck/boost; high efficiency
Battery charging approach	
• Series	Proven on skylab AM and planned for Multimission Modular Spacecraft; simplicity of peak power tracking
• Parallel (direct transfer)	Slightly higher efficiency and smaller array.
Battery switching (day/night)	
• Yes	Efficient 110 VDC output with 115-or 141-V array.
• No	Eliminates switching system complexity/reliability problem

Selected

Buck PWM regulators and chargers are selected for commonality, although a transformer coupled 28-V regulator would likely be somewhat more efficient. The array penalty is on the order of $200,000 for each point (1 percent) of regulator efficiency. This is a significant, but not overriding, factor favoring a more efficient regulator. The 88 percent regulator efficiency is likely conservative. The regulators and chargers are oversized to allow for parallel load sharing, internal redundancy, peak loads, and off-design-point array capabilities (temperatures less than 60° C and early in life). Some regulator oversizing is also required for size commonality and compatibility with twelve batteries and six circuits.

OSM Limited Capability Configuration

The limited capability OSM electrical power system is designed to deliver a nominal 30 kW at 28 VDC or 35 kW at 113 to 168 VDC to the user subsystems at the beginning of the mission. The block diagram of the power system is shown in Figure 3-48. The power and types of power delivered to the payload ports for the limited capability system are shown in Table 3-14.

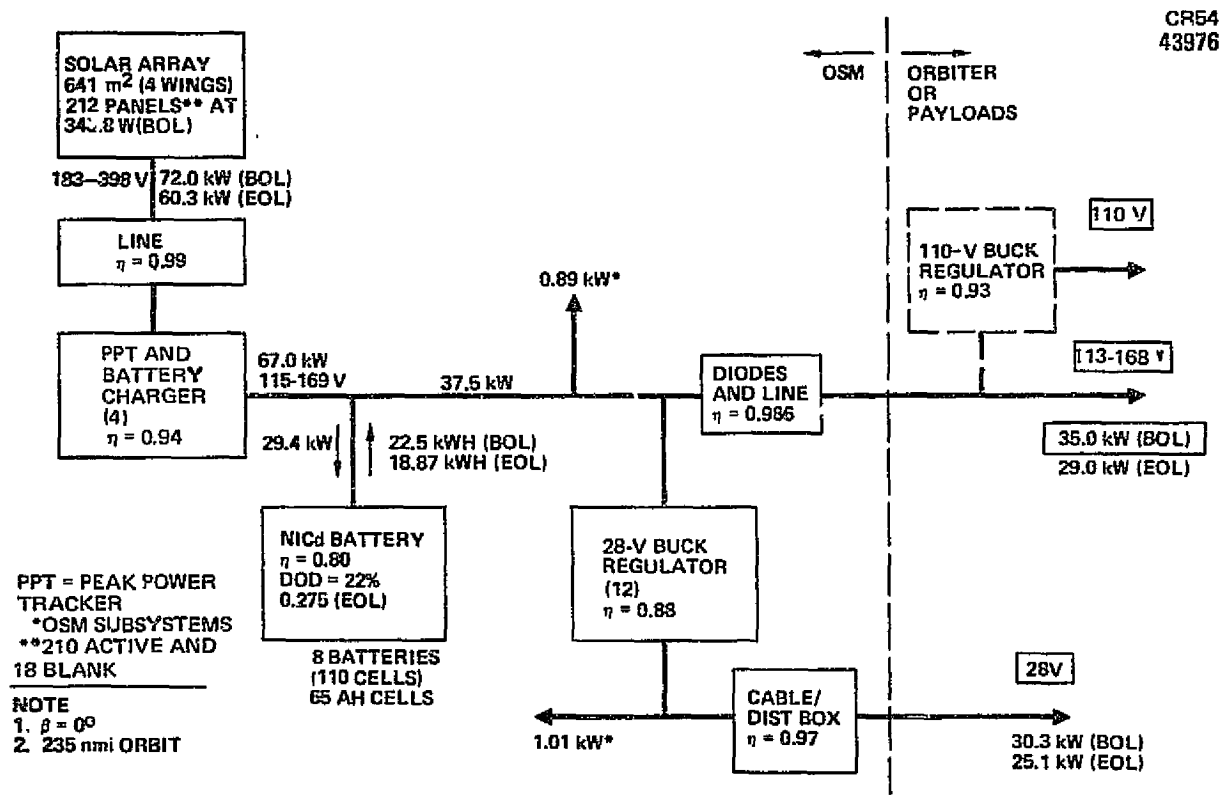

Figure 3-48. OSM Electrical Power System Block Diagram (Limited System)

ORIGINAL PAGE IS
OF POOR QUALITY

Table 3-14. Power Delivered to Payload Ports (kW)

Port Number	28 VDC	113-168 VDC
Orbiter	28	0
2 Ports	30	35
2 Ports	15	35

The solar array for the limited capability OSM configuration is sun-oriented, consisting of four wings patterned after the PEP array design concept. The array has a power of approximately 72 kW when launched. The array is made up of 212 panels, each panel having six strings of 510 cells in series to produce a minimum output voltage of 183 VDC. The array cell design, performance, and operating temperatures and voltages are the same as for the OSM full-capability configuration. The array has 210 panels covered with solar cells and two blank panels. The area of the array is 640 m^2, and the four wings are each 4 by 40.1-m-long.

The battery chargers, batteries, and voltage regulators are identical to those used in the full capability configuration although fewer chargers and batteries are needed because of the reduced power requirements.

The power distribution arrangement for the limited capability configuration is similar to that shown in Figure 3-47 for the full-capability configuration. The principal differences are that there are only four power circuits from the array instead of six, the power circuits are much shorter, and there is one less berthing port.

The weights of the power subsystem assemblies are shown in Table 3-15.

Table 3-15. Power System Weight

Assembly	Weight (lb)
Solar array assembly	2,216
Batteries	4,800
Power conditioning	1,416
Power distribution and control	324
Cable and wires	680
Total	9,436 lb

ORIGINAL PAGE IS
OF POOR QUALITY

3.2.5.4 Thermal Control Subsystem

Full-Capability Power Module Thermal Control Subsystem – Requirements and Constraints.

The function of the thermal control subsystem is to maintain the temperatures of OSM equipment within limits and provide cooling to the attached payloads. The amount of cooling provided amounts to the total electrical power generated by the OSM plus parasitic losses. Because the heat load is assumed to be lost to the space environment, no cooling is provided for electrical cable losses.

Cooling loads imposed on the system are shown in Figure 3-49 along with cooling temperature requirements for the load types. Values are given for both sun and shade sides of the orbit for 113-V unregulated and 28-V regulated power output to the payload. Values given in the figure for 113-V output show that total heat rejection is 61.4 kW shadeside and 56.7 kW sunside. Total heat loads for 28-V output are slightly lower. The bulk of the cooling loads are provided to payloads, 48.7 kW for 113 V and 42.1 kW for 28-V

CR54
47751

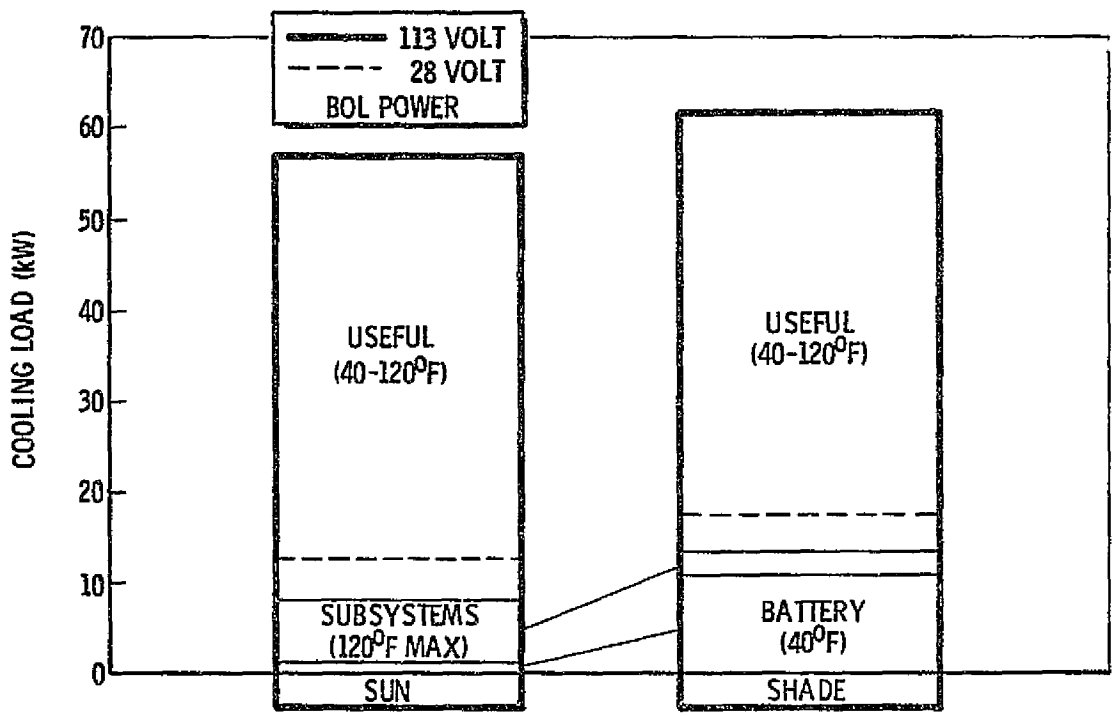

Figure 3-49. Full-Capability OSM Cooling Loads

output. Temperature requirements for these loads range from 40°F (4.4 °C) for life science/manned payloads to 120°F, or higher, for other avionics or space processing payloads. Battery life considerations indicate a 40°F (4.4°C) or lower temperature while other subsystem equipment can tolerate up to 120°F (48.9°C).

Key design guidelines for the OSM are low-cost and maximum use of existing technology and hardware.

Summary of Trades and Analyses – Several trades and analyses were performed to arrive at efficient OSM configuration and subsystem designs. Key trades and analyses are listed below.

- Radiator location trades
- Configuration comparison trades
- Heat pipe versus pumped fluid radiator trade
- Loop arrangements
- Off design point performance
- Radiator sizing
- Meteoroid protection analysis
- Effects of docked OSM on Orbiter performance

Radiator location trades showed that radiator area could be about 600 square feet (55.8 sq m) less for favorable locations which limit direct solar impingement and IR radiation from the solar arrays. Other considerations such as drag, experiment scan angle, packaging, and complexity were also examined but these impacted the design less than area considerations.

Little difference was noted between configurations regarding the thermal control subsystem. The most significant effect was for the gravity gradient configuration 3 where radiator performance was reduced at high β angles because the β angle correction for the array position placed it in the proximity of the radiators.

Radiator type trades showed that the heat pipe design cost about $0.5 million more but had greater potential for ease of maintenance.

Loop arrangement studies indicated that a series/parallel arrangement gave a good compromise of reasonable loop pressure drop and cooling capacity. This study assumed the use of the existing Orbiter payload heat exchanger.

Larger power levels can be handled by the thermal control design resulting in increased radiator temperature. These higher power levels can occur for limited time periods when full array output is used or with discharge of batteries in conjunction with array power. Results show radiator outlet temperature will rise about 0.8°F (0.45°C) for each additional kW of power over the design point.

Meteoroid protection analysis compared the weight required to increase probability of no puncture for conventional pumped fluid radiators, and heat pipe radiators. It was found that heat pipe radiator weight, attributable to meteoroid protection, was about ten times less than for pumped fluid approach.

Because of the small view angles between Orbiter radiators and OSM surfaces, Orbiter radiator performance is only reduced by about 2 percent by a docked OSM.

Subsystem Description and Features — The full capability OSM thermal control subsystem consists of two freon loops, both operating continuously. Each loop contains two Orbiter pump packages, one pump operates continuously in each pump package and the other is standby. The four active pumps for the subsystem provide a freon 21 flow of 10,500 lb/hr (4,773 kg/hr).

Figure 3-50 gives a simplified block diagram of the subsystem showing components, heat loads, and temperatures for shade and sunside operation. Dual loops are omitted in the figure for clarity. Orbiter equipment is used for temperature control values, experiment heat exchangers, and pump packages. Orbiter technology is reflected in the radiator design.

Component location in the loop is selected to provide the cooling amount and temperature required by each component, consistent with maximizing radiator performance and minimizing pump pressure drop. Batteries are located

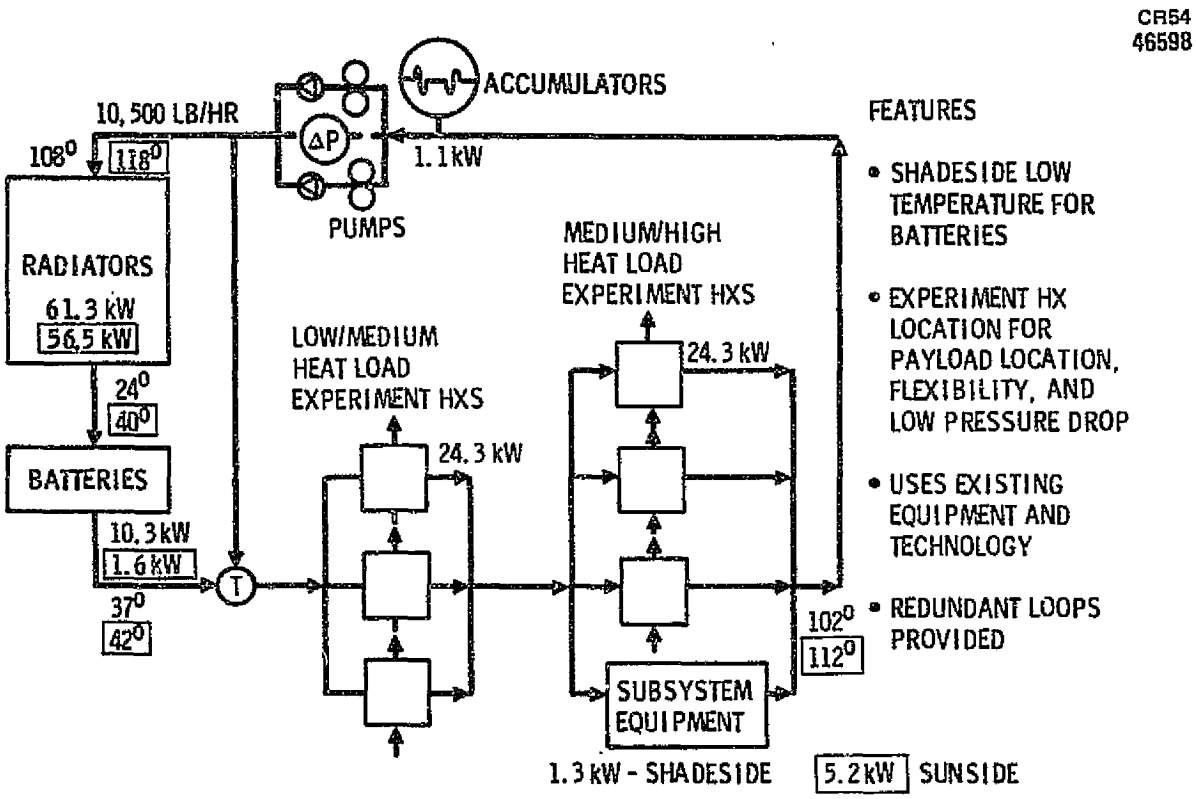

Figure 3-50. OSM Thermal Control Loop Arrangement Performance for 113-V Electrical Output (Full Capability)

just downstream of the radiators to take advantage of the cold 24°F (-4.4°C) fluid leaving the radiator on the shadeside of the orbit when battery loads are greatest.

A temperature control valve maintains a 40°F (4.4°C) minimum temperature to the first bank of experiment heat exchangers. This control temperature is compatible with an interfacing water loop normally used for life sciences or manned payloads. The experiment heat exchangers and subsystem cold plates are arranged in series/parallel allowing use of Orbiter equipment while maintaining reasonable fluid pressure drops and high cooling capacity in each heat exchanger.

A reliability of about 0.86 is obtained for the subsystem based on a 1-year mission. One component failure would be predicted about every 3 years.

Even though both loops are required for full capacity, the components are plumbed so reduced cooling is available to all components after losing a single loop.

The radiator design for the full capability is the pumped fluid type based on honeycomb composite Orbiter technology. This design was chosen largely because of its superior packaging dimensions.

Limited Power Module Thermal Control Subsystem – Requirements and Constraints.

The limited Power Module thermal control subsystem provides cooling to subsystem equipment and attached payloads. Sufficient performance is provided to reject all heat produced by Power Module subsystems plus all the electrical power generated (symmetric heat rejection). Figure 3-51, shows the amounts and temperature of cooling required for sun and shadeside operation with power output as 113-V unregulated and 28-V regulated.

The design point corresponds to a required rejection rate of 44.8 kW shadeside and 41.3 kW sunside. Batteries require 40°F (4.4°C) cooling and subsystem equipment have a 120°F (48.9°C) maximum temperature limit. Payload cooling varies depending upon type but life sciences have a general requirement of 40°F (4.4°C) and other types are compatible with a 120°F (48.9°C) maximum.

CR54
47754

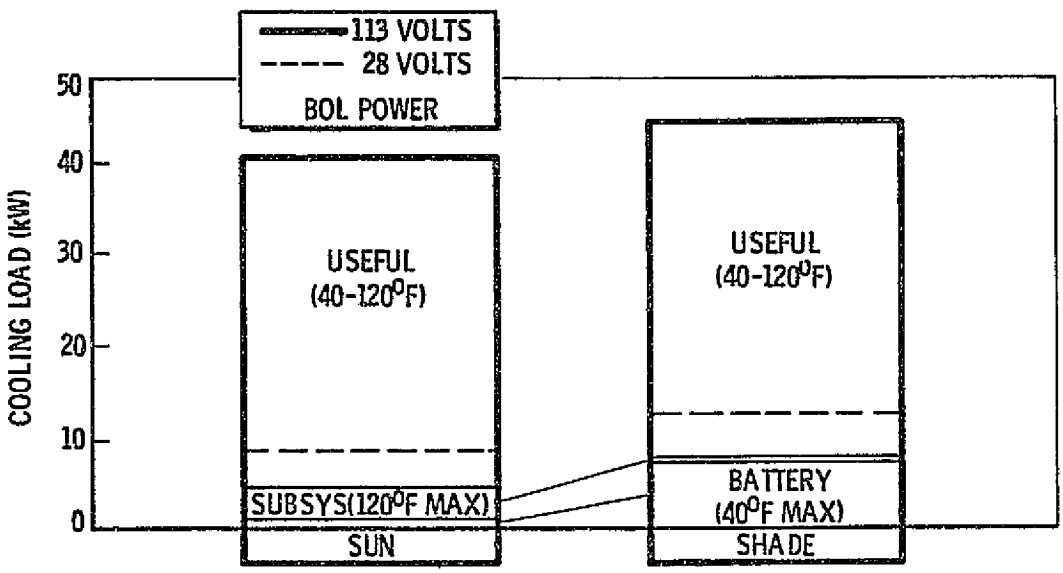

Figure 3-51. Limited OSM Cooling Loads

ORIGINAL PAGE IS
OF POOR QUALITY

Summary of Trades and Analyses – Listed below are several trades and studies performed that are applicable to the Limited Power Module.

- Heat pipe versus pumped fluid radiators
- Thermal loop arrangements
- Off design point performance
- Radiator sizing
- Meteoroid protection analysis

An off design point performance analysis showed that much higher heat rejection can be obtained with moderate increase in cooling loop temperatures. The radiator outlet temperature increases by about 1°F (0.56°C) for each kW of heat load above the design load. Radiator sizing analysis showed that a radiating area of 1,100 sq ft (102 sq m) is required to reject the design cooling load.

Meteoroid protection analysis assessed the penalties for increased meteoroid protection of both heat pipe and conventional pumped fluid radiators. It was found that about ten times more armor weight was needed for pumped fluid concepts to increase the probability of no puncture from 0.96 to 0.99.

Subsystem Description and Features – The limited OSM thermal control system consists of two continuously operating freon loops, which pick up the OSM parasitic and experiment heat loads and transport the loads to the radiator where it is rejected to space. Figure 3-52 gives a simplified block diagram of the system along with predicted performance on the sun and shadeside portions of the orbit. A detailed breakdown of the loads was given previously in Figure 3-51.

Each of the two freon loops provided contains one Orbiter pump package. The required fluid flow in the two loops is achieved by operating one pump in one loop and both pumps in the other loop. The temperature of freon entering the first experiment heat exchangers is controlled to 40°F (4.4°C) minimum to be compatible with manned or life science payloads with a water loop interface. Because the batteries reject most of their heat on the shadeside, they are placed just downstream of the radiators so that the better radiator performance on the shadeside of the orbit can be used to cool them.

ORIGINAL PAGE IS
OF POOR QUALITY

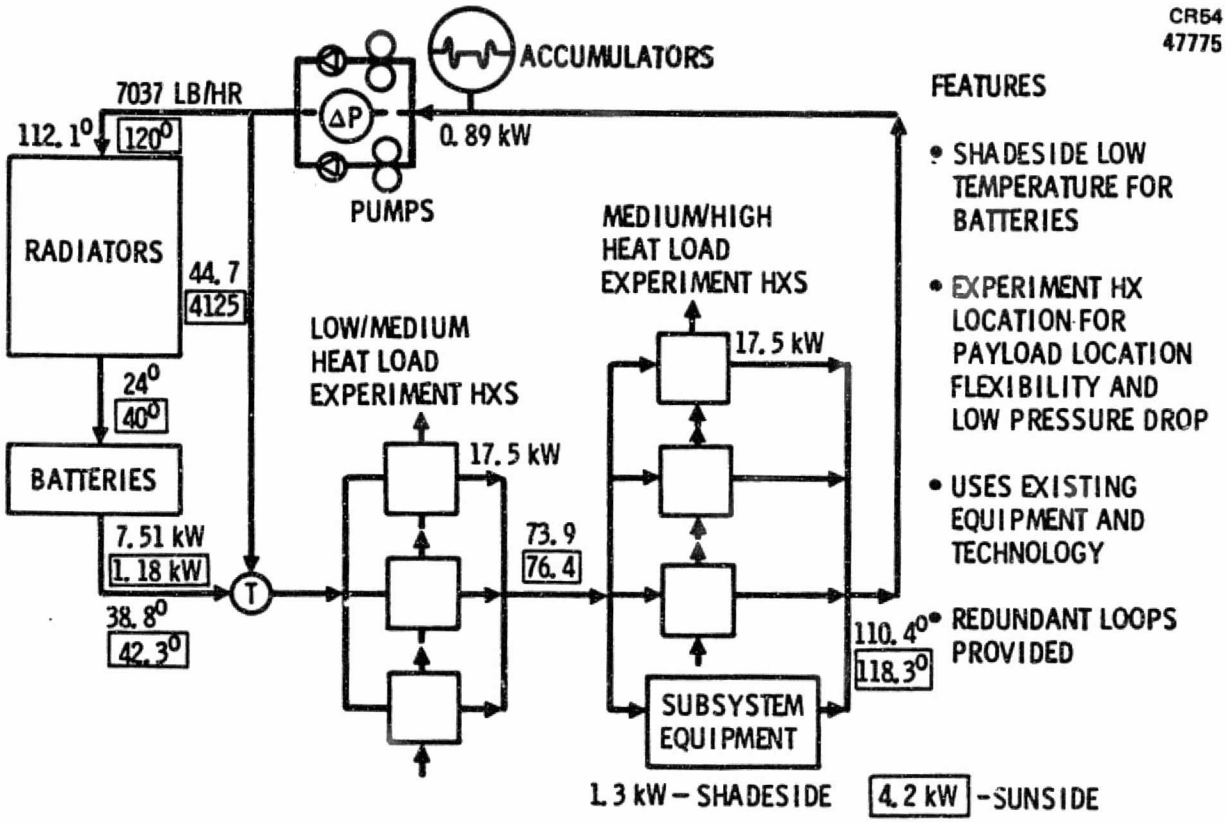

Figure 3-52. OSM Thermal Control Loop Arrangement Performance for 113-V Electrical Output (Limited Capability)

Experiment heat exchangers, identical to the Orbiter payload heat exchanger, are configured in a series-parallel arrangement to obtain a favorable balance between pressure drop and cooling capacity. Each freon loop flows through one of the redundant passages of the heat exchangers.

The payload interfaces with the OSM via disconnects on the experiment side of the heat exchangers. This prevents possible fluid contamination, loss of fluid, or pressure drop incompatibilities which could occur if experiments are physically tied into the OSM fluid loops.

To maintain low loop pressure drop, cold plated subsystem equipment is located in parallel with the last row of experiment heat exchangers.

A single OSM radiator is mounted to the central structural number and is 54.1-ft (16.5 m)-long and 20.3-ft (6.2 m)-wide. The design of the radiator uses Orbiter technology consisting of a composite aluminum honeycomb construction covered with a silver/teflon surface coating.

3.2.5.5 Power Module Avionics, Guidance and Control Subsystems

Requirements and Constraints

The general requirements for these subsystems are listed in Table 3-16. Stabilization of mission elements in the free-flyer mode is required to 0.2 sec accuracy as indicated in Figure 3-53. However, experience with the Skylab program and Shuttle planning data (both on the bottom of Figure 3-53) indicate a gross level of control for the spacecraft (of the order of 360 arc seconds) separate from that of the most accurate mission requirements which require a second, or vernier, level of control to achieve precision as low as the sub arc-second region. Accordingly, the OSM requirements were chosen in the gross spacecraft region and were as necessary to support the flight integrity of the OSM vehicle. It is required that these levels be compatible with a second (precision) level of control associated with special sensors and dynamic isolation from the OSM.

System Description (Full-Capability and Limited Concepts)

The elements of the Stabilization and Control system are shown in Figure 3-54. Three separate actuation systems are involved; one controls the solar array gimbal angles, the CMG gimbal torquers, and finally the two degrees-

Table 3-16. OSM-Power Module Avionics, Guidance and Control Requirements

- Provide stabilization for the orbiting vehicle in free-flyer mode
  - All-attitude, active stabilization without propulsive desaturation
  - Array solar orientation
  - Low g environment ($<10^{-5}$g) to support processing in space
  - Orientation changes on command
  - Maintain stabilization during micro-rendezvous and capture
- Perform attitude control with Orbiter attached
- Process navigation, stabilization, and control data and accept fine pointing data from mission equipment
- Enable ground control of the vehicle and status data transmission
- Contain facilities for high rate payload data multiplexing and transmission via the TDRSS

ORIGINAL PAGE IS
OF POOR QUALITY

CR54
47752

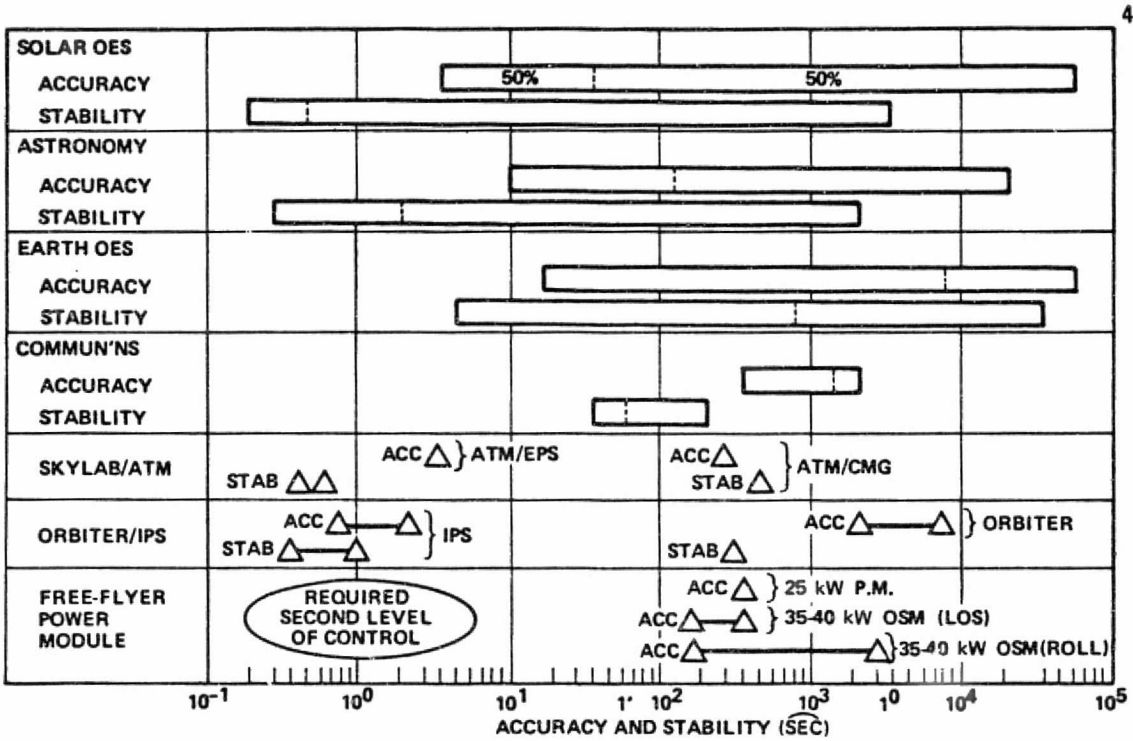

Figure 3-53. Pointing Requirements and Potential Solutions

CR54
44121

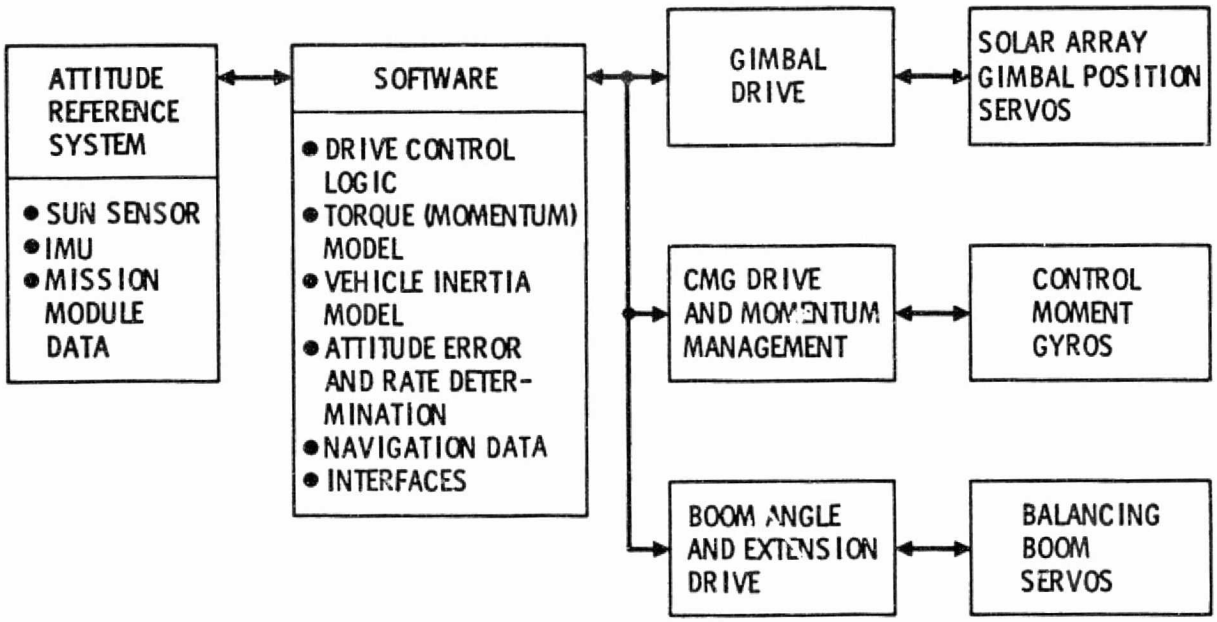

Figure 3-54. OSM-Power Module Stabilization and Control System Elements

of-freedom boom control for the balance mass. The attitude reference system consists of a two-axis sun sensor, a three-axis IMU, and provisions for accepting precision data from any mission module. Trim in roll about the sun vector is provided by using the CMG output torque as reference to trim the principal axis of the vehicle within the orbit plane. The estimated accuracy of this technique, based on the dead-spot characteristics of the ATM CMG, is of the order of 30-40 arc minutes. This technique has been adopted in line with referencing a low-cost system. If future requirements and integration analyses indicate that better accuracy is required, a star tracker and star catalog system can be added

The software can be better understood by referring to Figure 3-55. The interrelationship between the inertia model, attitude determination, and navigation data is indicated so that the proper orientation of the principal axes of the spacecraft can be maintained to minimize the actuation requirements. Additionally, the orientation of principal axes to geometric axes must be determined so that mission pointing relative to the orbit plane can be accom-

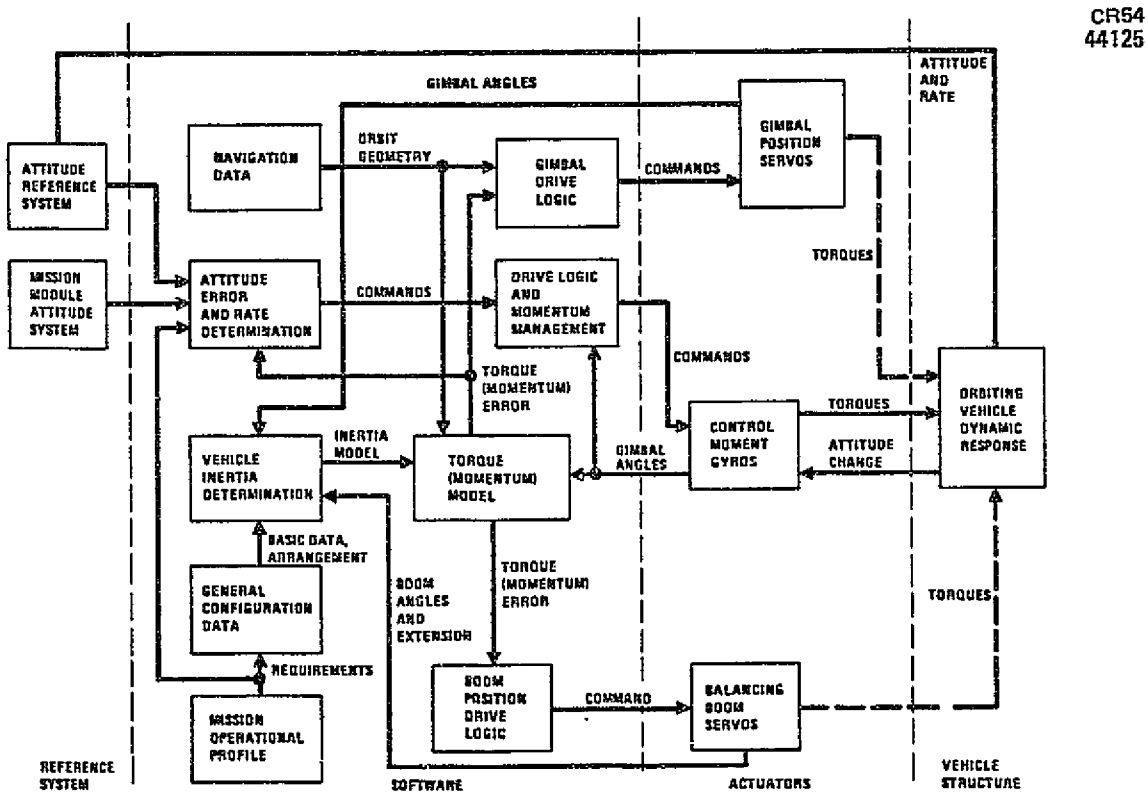

Figure 3-55. All-Attitude Power Module Stabilization System

modated. This general mechanization applies to the IOP/Solar Inertial orientation as well as the orientation with the array axial axis perpendicular to the local vertical.

The subsystem diagram of the total Avionics Subsystem with Stabilization and Control integrated with Communication and Data Handling is shown in Section 3.2.5.6.

Major Trades (Full-Capability and Limited Concepts)

Trades associated with actuation system sizing were performed in comparing both the full-capability and the limited configurations. A summary is given in Table 3-17 illustrating the sizing parameters for the two concepts. The reason the limited concept requires a larger balance boom mass than the full-capability concept is because the radiator and the mission modules are separated a fairly large distance, incurring a large cross-product in inertia requiring correction. Although the aerodynamic POP-axis for the limited concept is less than that of the other concept, its gravity gradient desaturation maneuver is slightly larger because its solar array mass is one-third smaller.

Table 3-17. OSM Control Actuation System Sizing Full Capability Versus Limited Concept (IOP/Solar Inertial Orientation)

Orientation configuration	Saturation time (3 CMG's - no boom or desaturation maneuvers	Stabilizing boom weight (l=100 ft) or offset* angle about POP-axis	No. CMG's required to store symmetric torques	Aero POP-axis bias and desaturation maneuver required
Full capability concept	2.7 orbits	1561 lb	1.45	725 (ft-lb-sec)/orbit 1.5 deg bias 1.5 deg oscillation
Austere concept	1.69 orbits	2465 lb	0.85	596 (ft-lb-sec)/crm 1.83 deg bias 1.83 deg oscillation

*Assuming gravity gradient desaturation.

A comparison of the actuation system sizing for the full-capability concept as a function of number and location of mission modules is given in Table 3-18. Because these numbers were derived from a configuration slightly different from that shown in Table 3-17, no number is in complete agreement with that table, however, the given numbers for the sizing parameters are approximately the same. A rather surprising fact is that the sizing parameters are not a strong function of the number of mission modules.

3.2.5.6 Power Module Communications and Data Handling

Requirements for subsystem communications rates (forward and return) were developed first using a top-down approach; then, requirements for payload support were added. A discussion of the requirements together with options for their accommodation is contained in the appropriate supporting data documentation. Figure 3-56 illustrates the general and concept-peculiar features of the subsystems. The capability shown for the intermediate OSM is representative of a return link using the NASA standard 5-W transponder and an omni antenna while the forward rate of 125 bps is the minimum documented for command reception. Link analysis indicates a rate of about 900 bps actually can be supported. By incorporation of fixed direction antennas with 6 dB gain and a 20-W power amplifier, a return rate of 64 kbps and a forward rate of 2 kbps could be provided for the limited capability OSM whenever a Tracking and Data Relay Satellite (TDRS) appears within the 90 degree beamwidth of each antenna. The system would revert to the intermediate OSM capability at other times. The 64 kbps design point was selected since it is the maximum rate of the NASA standard data handling system. Addition of a high-gain antenna, transmitter and signal processor in lieu of the fixed directional antennas would add a 10 Mbps return rate capability for payloads on the full capability OSM.

Communications requirements between the Orbiter and the power module were also assessed, and the adequacy of preliminary equipment selections was reviewed both in free-flying and docked configurations. The results of this analysis are reported in supporting data documentation. It was found that forward (command) rates up to 2 kbps and return rates to 16 kbps were feasible in the free-flying mode. Interface incompatibilities existed in the docked operations mode and options for their removal are presented in the supporting data.

Table 3-18. Control Actuator Sizing Full-Capability Configuration IOP/Solar Inertial Orientation

	Aero POP bias (ft-lb-sec/orb)			Orbits to saturation with 3 ATM CMGs			Balance weight on 100-ft-boom (lbs)			Number of ATM CMGs for momentum storage		
θ, Swing angle	0	45	90	0	45	90	0	45	90	0	45	90
Module combination												
A	434	533	351	12.3	14.8	3.7	338	283	123	1.24	1.25	1.27
C	256	256	101	2.5	4.0	3.3	1,651	1,047	1,264	1.0	1.0	1.0
AB	544	673	447	3.9	5.9	3.4	1,074	703	150	1.33	1.35	1.41
AC	456	535	295	2.7	2.8	3.0	1,535	1,414	1,414	1.23	1.19	1.23
BD	99	67	2	6.3	10.5	9.2	665	398	453	1.49	1.51	1.50
BE	93	27	224	14.0	17.5	9.9	292	420	420	1.51	1.52	1.51
ABC	642	475	385	3.6	4.2	2.7	1,145	992	1,561	1.43	1.31	1.36
ACD	168	243	50	2.7	3.6	3.4	1,547	1,156	1,236	1.48	1.48	1.46
BCE	201	76	50	2.2	2.5	3.5	1,912	1,686	1,210	1.33	1.42	1.48
ABCD	360	279	166	4.1	4.9	3.1	1,019	851	1,332	1.59	1.64	1.69
ABCDE	172	119	33	3.0	2.7	3.4	1,410	1,543	1,230	1.80	1.81	2.01

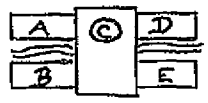

MCDONNELL DOUGLAS

FEATURES

GENERAL:

- NASA STANDARD SUBSYSTEM
- S-BAND OPERATION
- TDRSS/STDN COMPATIBLE

INTERMEDIATE OSM:

- OMNI ANTENNAS
- 4 KBPS DOWNLINK; 125 BPS UPLINK
- NO PAYLOAD SUPPORT

LIMITED CAPABILITY OSM:

- BROADBEAM DIRECTIONAL PLUS OMNI ANTENNAS AND POWER AMP
- 64 KBPS DOWNLINK; 2 KBPS UPLINK
- PAYLOAD DATA MULTIPLEXING/ RECORDING

FULL CAPABILITY OSM:

- HIGH-GAIN ANTENNA SYSTEM
- 64 KBPS PLUS 10 MBPS DOWNLINK; 2 KBPS UPLINK
- HIGH-RATE PAYLOAD DATA TRANSMISSION

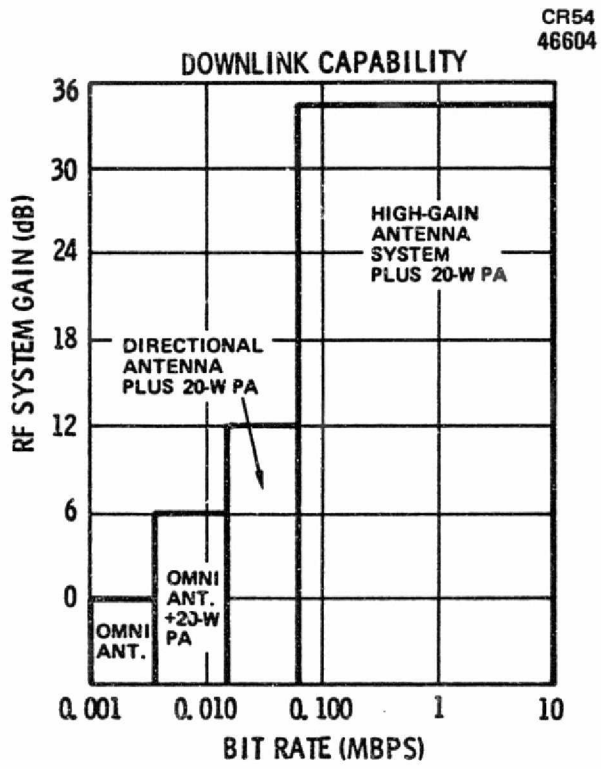

Figure 3-56. Communications and Data Handling

The proposed full-capability power module control (communications) and data handling subsystem, as shown in Figure 3-57, primary consists of NASA standard components. Exceptions include the control electronics and drive units which are developed from off-the-shelf subassemblies and components with high data rate.

Each of the wing drive assemblies contain power conditioning and servo-amplifiers which control the mast extension motors and gimbal torquers together with signal conditioning for shaft encoders and other array-mounted instrumentation. The control electronics packages provide local processing for array mode control, logical commands and data formatting. They operate, as do all module subsystems, in conjunction with remote interface units (RIUs), which decode and distribute commands from the central computer and multiplex, encode, format and transmit telemetry channels.

The central (data) unit controls the data bus to which the RIU's are connected and decodes the uplink (ground commands). It provides access to the bus for

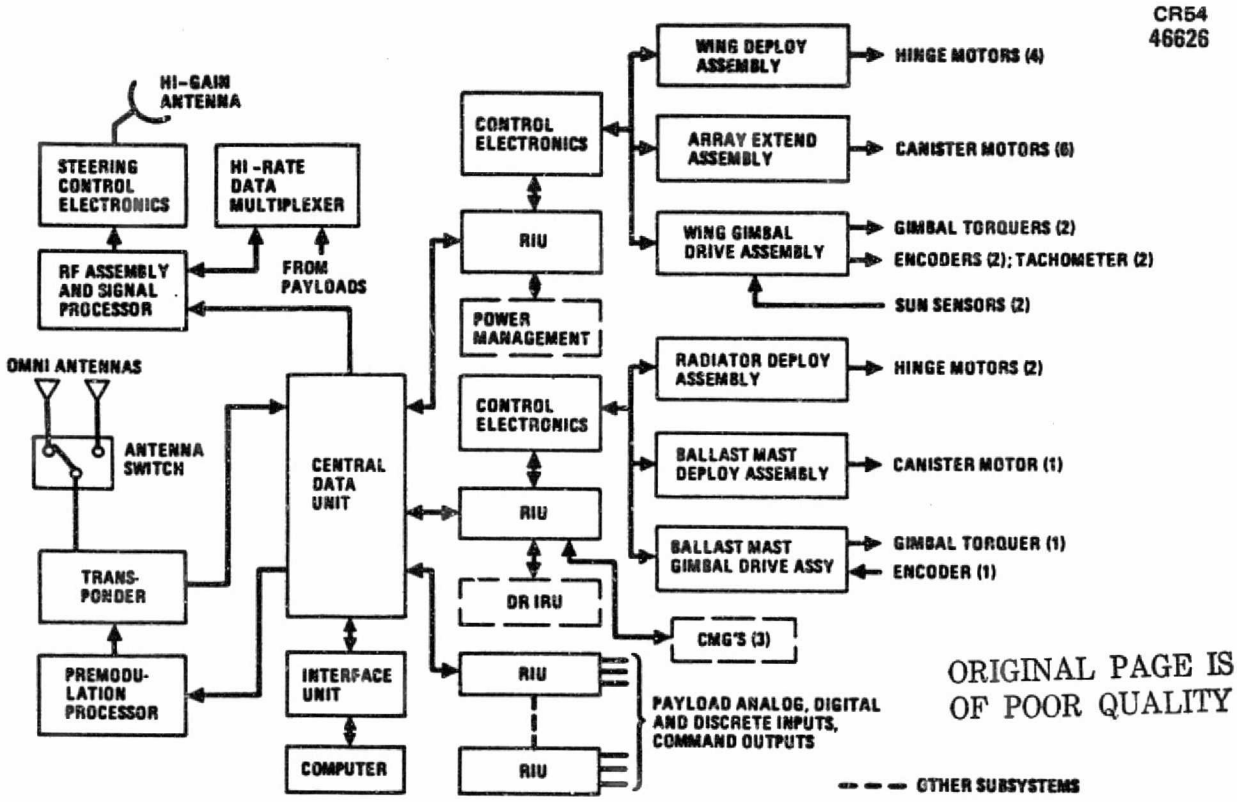

ORIGINAL PAGE IS OF POOR QUALITY

Figure 3-57. Avionics System Block Diagram

the computer via the interface unit and outputs a serial bit stream to the premodulation processor for encoding digital data prior to its transmission by the transponder. The transponder provides a diplexer for coupling the omni antennas to the receiver and transmitter. A radio frequency (RF) switch is provided for selection of one of two antennas with hemispherical patterns.

In support of payloads, RIU's may be provided to the payloads for low-rate data acquisition/telemetry and the reception of discrete or serial commands. A port is also provided on the premodulation processor for high-rate serial data as constrained by the link margins.

The high-rate data system constitutes the major difference between the system for the full-capability OSM and other OSM concepts; other changes such as the computer used (NSSC-II versus NSC-1) and the quantity of RIU's are also made. It is composed of the High-Gain Antenna Systems, (Figure 3-58), for the Solar Maximum Missions, a "Data Group 2" transponder, a new premodulation processor and a Spacelab high-rate multiplexer. The con-

cern with this system is that the line of sight between the antenna and one of the two TDRS satellites not be obscured by pallets, radiators or solar arrays. To preclude this, two antenna systems are carried, and computer based analyses are in progress to provide assurance that such blockage is a minimum. Products of the analysis include plots of antenna field of view and blockage as a function of inertial and earth pointing orientations. Initial results indicate one or the other antenna is relatively clear for the entire orbit.

3.2.6 OSM Power Module Operations

Operations for the Power Module Project covers two phases: dedicated launch and deployment of the Power Module, and the turnaround operations for the Orbiter OSM equipment allowing Orbiter-attached payloads to take advantage of the power module services on subsequent flights. Orbiter OSM equipment is defined as that OSM fluid and electrical equipment to be installed in the Orbiter for interfacing with the Power Module on subsequent flights and allow the Orbiter attached payloads to utilize Power Module services.

Figure 3-59 is a pictorial flow of the Power Module activities required at each launch site facility along with its most significant on-orbit activities. Horizontal processing and integration was baselined with Orbiter integration in the Orbiter Processing Facility. More detail will be given subsequently with the ground processing timelines.

After arrival on orbit, the Power Module will be deployed as a free-flying satellite and the Orbiter with its OSM equipment will return to the launch site. The Orbiter OSM equipment will be removed from the Orbiter in the OPF and then processed through routine turnaround operations. The dark arrows in Figure 3-59 show the turnaround activities flow for subsequent flights.

The Power Module Project will utilize the KSC "host" concept for launch of the Power Module with JSC and the Power Module contractor performing the processing of the Power Module. The Orbiter OSM equipment will be turned over to KSC for processing as a flight kit when it becomes operational.

CR54
47753

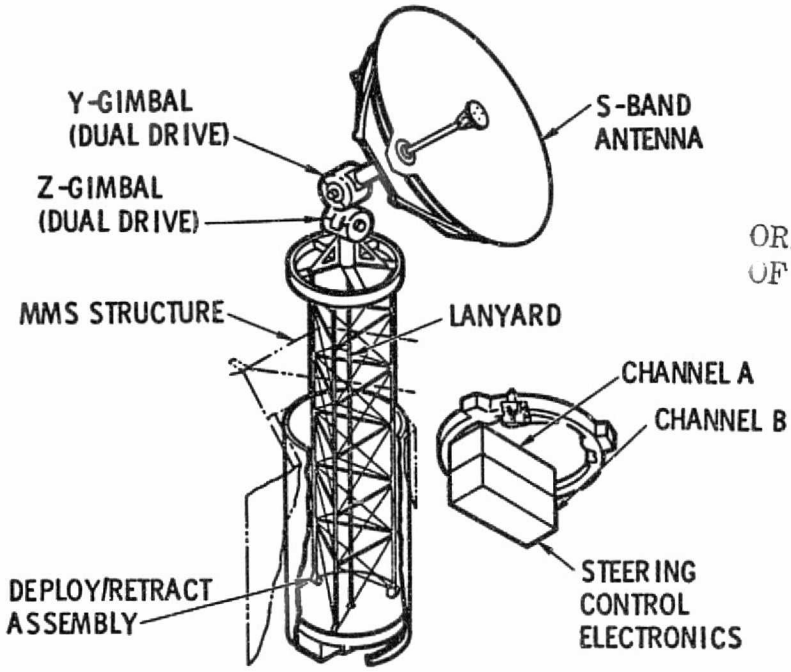

ORIGINAL PAGE IS
OF POOR QUALITY

Figure 3-58. High-Gain Antenna System

CR54
43910

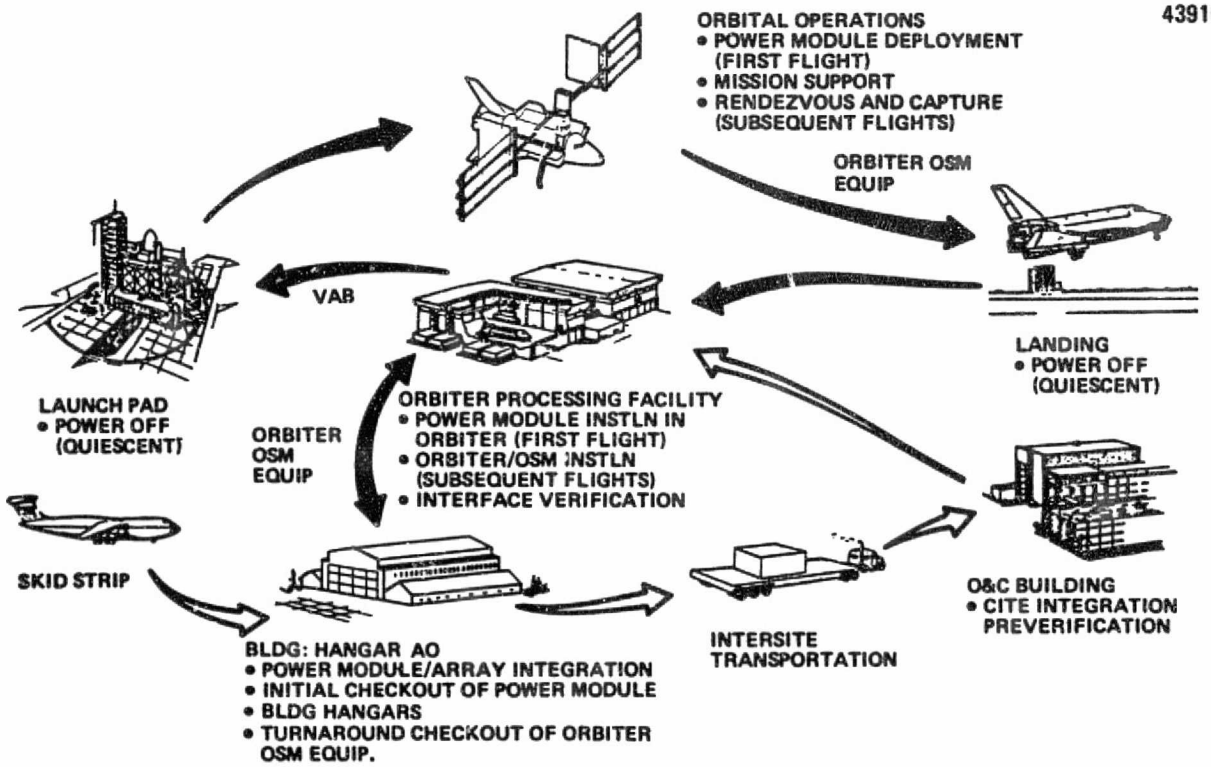

Figure 3-59. OSM Power Module Operations

3.2.6.1 Deployment Mission Launch Processing

Figure 3-60 is a timeline of the launch site activities required for launching the Power Module dedicated payload. The Power Module will arrive at the Cape Canaveral Air Force Station (CCAFS) Skid Strip aboard the Super Guppy aircraft. Should that aircraft not be available, a sea-going barge will be used. The Power Module, in its own shipping container, will be transported to Hangar AO for off-line integration and checkout. Hangar AO is tentative selection for these activities with CITE stand in the KSC O&C Building a viable alternative. A tradeoff analysis between these two facilities should be performed during the phase B study when the requirements have been firmed.

CR54
43911

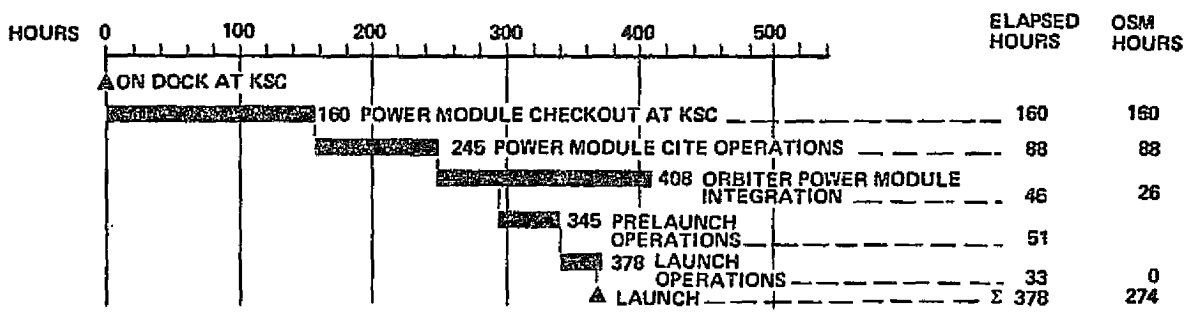

Figure 3-60. OSM Power Module Processing Timelines

In Hangar AO, the Power Module will be placed in a test stand utilizing the Orbiter-flight interfaces. The solar arrays will be installed, and the batteries, after being charged, will also be installed. Ease of installation will be enhanced by locating the batteries externally on the Power Module. Interface and subsystem compatibility will be verified and then the total system will be tested as a unit. A modified ship-and-shoot philosophy will be the guideline dictating minimum checkout at the launch site. The Hangar AO activities will require 160 working hours or 20 shifts.

ORIGINAL PAGE IS
OF POOR QUALITY

The Power Module will be transported to the O & C Building for preinstallation compatibility verification with other cargo elements, if any, and with Orbiter simulation in the CITE. It will be tested for compatibility with the Orbiter Physical and function interfaces. The PM will be removed and installed in the NASA payload canister for transporting to the OPF. The CITE effort is anticipated to take about 88 working hours. The Power Module will then be transported to the OPF in the NASA payload canister and transferred as a single entity into the Orbiter payload bay. It will have a minimum interface with the Orbiter because it will be maintained quiescent once integrated and verified with the Orbiter through subsequent Orbiter activities in the Vertical Assembly Building, and at the Launch Pad through launch, until it arrives on orbit.

3.2.6.2 Orbiter OSM Equipment Turnaround Operations

Figure 3-61 is a timeline for the operational turnaround of the Orbiter OSM equipment needed to use the Power Module for Orbiter-attached payloads. Shuttle Turnaround Analysis Report No. 14 was a contractual guideline, and its assessment of the Orbiter turnaround is shown as dashed lines in the timeline. The solid lines show how the OSM equipment fits into that turnaround.

CR54

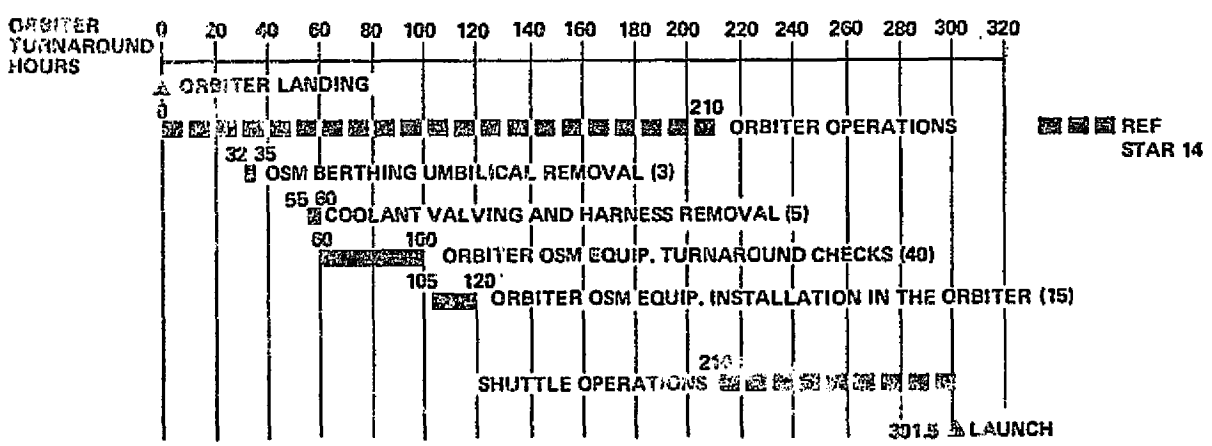

Figure 3-61. Orbiter OSM Power Module Equipment Turnaround

The most critical periods in the turnaround are installation in, and removal from, the Orbiter. This study made a concerted effort to minimize impact on the Orbiter timeline through innovative design. The most significant item was elimination of the need for a standard docking module and the reduction of many hours of installation/removal time which would have caused considerable Orbiter impact on each user flight.

The OSM equipment operations time in the OPF will be eight hours for removal from, and 15 hours for integration into, the Orbiter—none of which is considered Orbiter impact. Operations times were reduced by using standard Spacelab/PEP harnesses, including the PEP junction box for the Orbiter-attached payloads requiring high power and/or longer duration. For those special missions having even higher requirements, a second umbilical kit will be provided for higher power and thermal control fluids. In addition, the equipment may remain on the Orbiter during payload changeout on the ground between missions or during flight of other missions that are not weight critical.

For any off-line maintenance and checkout required for the Orbiter OSM equipment, it will be transported from the OPF to Hangar S. Factory type GSE will be available including test fixtures. Approximately 40 working hours will be sufficient to perform the routine activities.

After checkout, the OSM equipment will be stored until needed, then transported to the OPF, integrated into the Orbiter and verified, ready to support the next flight.

3.2.6.3 Power Module Facilities and GSE

The facilities required for Power Module processing were shown in Figure 3-59. Opening of the arrays at KSC was avoided to eliminate the resulting high cost of facilities construction or modification and GSE necessary.

Hangar AO was selected to perform the initial checkout of the Power Module before its deployment flight. As mentioned earlier, the CITE is a viable alternative that should be addressed in the next study phase. Hangar S was selected for performing the routine off-line Orbiter OSM equipment pro-

cessing. No major facilities modifications are anticipated. A single set of GSE will satisfy both the factory and launch site checkout and test requirements.

3.3 ALTERNATE CONFIGURATIONS

As discussed in Section 2, real mission requirements in the post 1984 time period are speculative in that they depend heavily on projections of funds available to the OSM user community in the future. For this reason, MDAC has examined OSM designs covering a range of capability with the reference design (Section 3.2) representing a "full capability." These, together with growth configurations described in Section 3.4, provide cost information on OSM's covering a range of capability from 13 to 80 kW (minimum average power).

In addition, an alternate full-capability configuration is presented that can provide an ability to independently point multiple payloads; i.e., it can, for example, stabilize an earth observation payload relative to the local vertical while holding an astronomy payload fixed in an inertial reference system.

Figure 3-62 shows the OSM concepts and derivatives studied and Table 3-19 lists the major variables that were considered in the synthesis of these configurations. Note that both the full-capability and limited capability configurations are rated at 35 kW. But "full capability" provides 35 kW power regulated to 28 V after 5 years of orbital operations while the "limited capability" is 35 kW unregulated power at beginning of life. Unregulated power, however, is useful since the payloads predicted to have the greatest need for power in the near future (space processing) can utilize this energy quality without significant functional penalties.

Orientation capability of the intermediate and limited capability power modules is limited in time only since, in the interest of economy, balance booms and other means of desaturating the CMG's have been eliminated. Because both configurations have two-axis gimbals, any orientation of the payload is possible, but the duration that a particular attitude may be held is limited by the buildup of angular momentum in the CMG's.

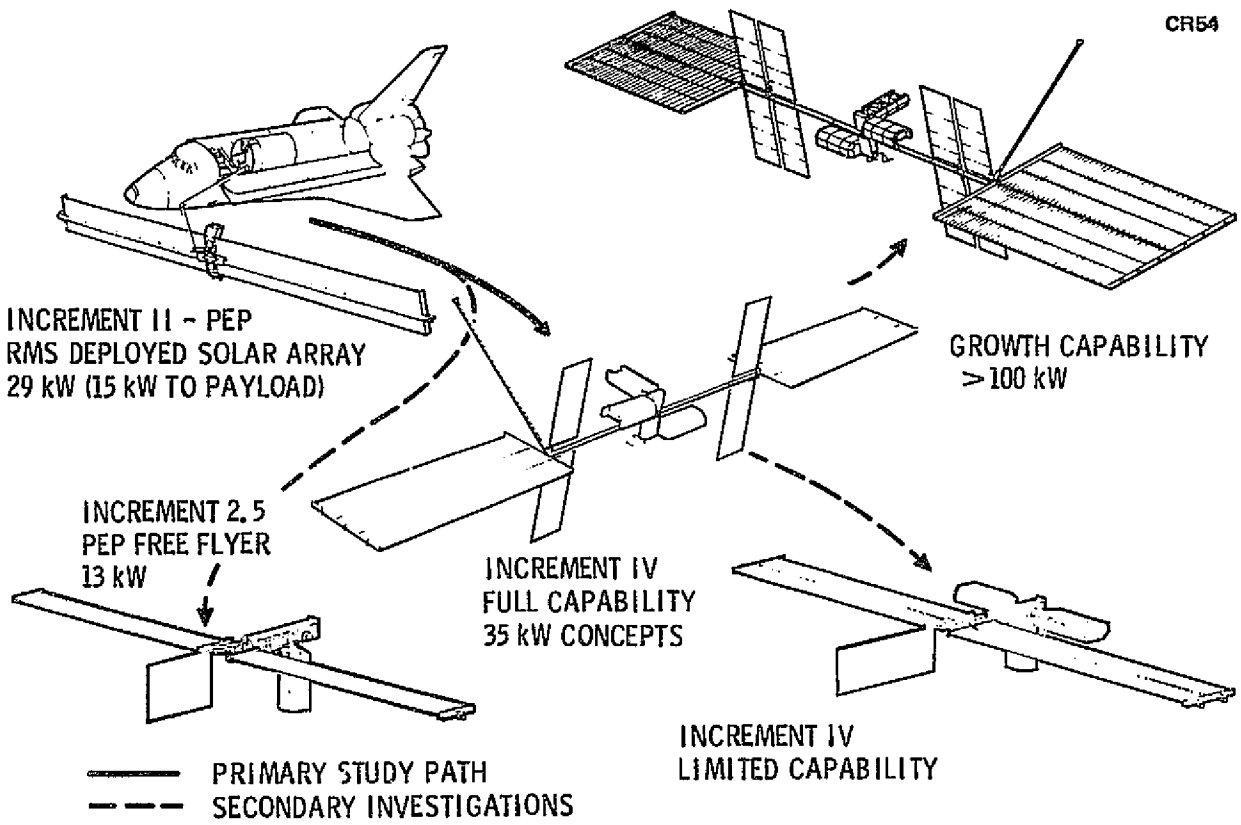

Figure 3-62. OSM Concepts and Derivatives

Table 3-19. Concept Variations Responsive to Key Issues

Major variables:

- Power level
- Orientation capability
- Multiple payload orientation
- Cost

ORIGINAL PAGE IS
OF POOR QUALITY

Concept variations:

- Intermediate capability (13 kW at 28 V) free flyer
- Limited capability 35 kW
- Full capability (35 kW) with multiple, simultaneous payload orientation
- Growth capability ~100 kW

3.3.1 Intermediate Power Module

In the review of user requirements, it was noted that many projected payloads, which can beneficially utilize the long duration capability of the OSM, require relatively low power. These include Earth and Solar Observations,

ORIGINAL PAGE IS
OF POOR QUALITY

astronomy and life sciences. A review indicates that up to three or four payloads in these categories could be supported for about 12 kW. Additionally, review of orbital parameter requirements indicates that some payloads need very high orbital inclinations or altitudes. Since a majority of users can operate at orbital parameters where Orbiter performance is maximized, this represents another reason to consider a smaller, lower cost power module. Hence, the Intermediate Power Module can fit a number of program scenarios: it may be an adjunct to a full-capability OSM that accommodates users requiring different orbits, it could be the initial Power Module in a more austere total NASA program, or it may be used in a program of multiple Power Modules to provide maximum flexibility.

Figure 3-63 illustrates a design concept for the Intermediate Power Module. It features maximum commonality with the PEP system and, in fact, utilizes an unmodified PEP array assembly including structure, gimbals, solar tracker, and associated control electronics. PEP voltage regulators would also be used, and a modified version would be used as battery chargers. As indicated, communications and data handling equipment would be greatly reduced (no high-gain antennas) from the full capability OSM.

CR54
46730

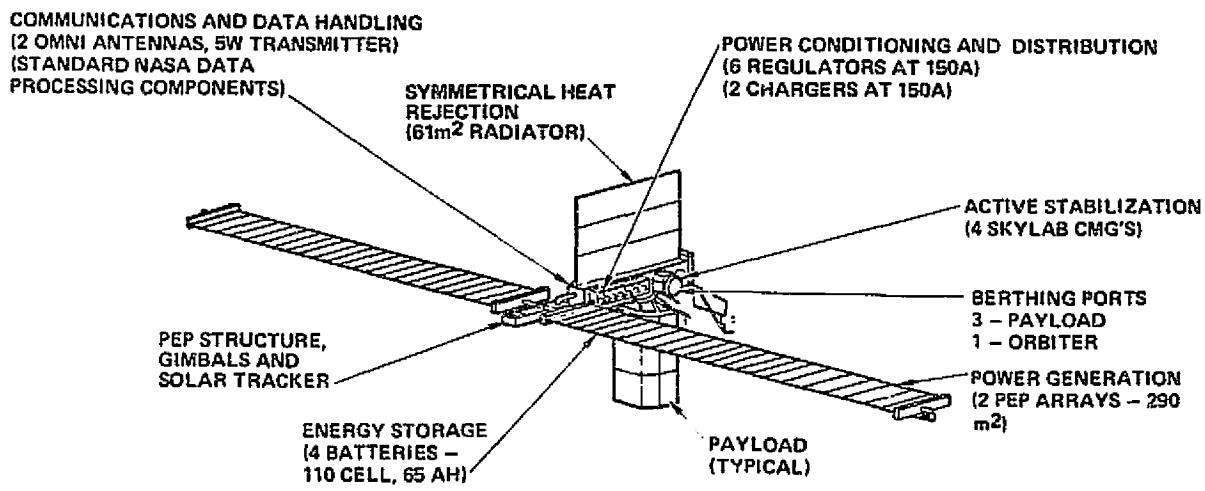

SYSTEM CHARACTERISTICS:

- POWER RATING – 13 kW AT 28 V
- WEIGHT – 9,573 LB
- FLYBACK OR ON-ORBIT STOWAGE

APPLICATIONS:

- DEDICATED OR MULTIPLE USERS
- FREE-FLYING SPACLAB PALLETS
- SCALED DOWN MEM
- MULTIPLE INCLINATION MISSIONS

Figure 3-63. Intermediate Power Module Concepts

While use of four "Skylab" type CMG's represents something of an overkill of the control problem, it is belived that this approach would result in lower costs than fully developing a new CMG. In the case of the Power Module, the additional weight of the larger units (approximately 800 lbs more than minimum sized CMG's) is not considered particularly significant. In fact, if the vehicle is to be operated at low altitude commensurate with maximum Orbiter performance (220-230 nmi), added ballast would be desirable to re-reduce the rate of orbital decay. Such ballast would not only reduce orbital decay rates but also result in less propellant required for reboost if the Orbiter is used for this function. If a separate propulsion system (not incorporated in the illustrated configuration) is used, ballast has no effect on propellant consumption.

Three identical berthing ports are provided for payloads and payload length is unrestricted. It will be noted that this configuration, and that of the Limited Capability Power Module subsequently described, has no separation between the solar arrays. As previously discussed, separation allows concentration of the payload mass near the OSMs' center of gravity and aerodynamic center to greatly reduce control requirements. In particular, this feature reduces the size of balance booms or other devices (such as magnetic torquers) required to desaturate the CMG's. But since the design philosophy of these lesser capability modules accepts limited duration in awkward vehicle attitudes and desaturation through subsequent stabilization at a favorable gravity gradient position, array separation is not needed for reduction of gravity gradient and aerodynamic torques. In the full-capability Power Module, array separation also reduces the Orbiter Environmental Control System (ECS) plume problem to manageable proportions without array retraction. Since these smaller modules have less array and relatively greater control (the same CMG's) both the control and contamination/damage problems may be overcome by feathering the array and/or use of X-axis Orbiter RCS for Z-axis braking (cant of the X-axis RCS thrust lines allows this approach). If this speculation does not prove to be true, the arrays may either be retracted or a non-propulsive "coast in" approach to the RMS grapple point adopted. While this latter technique is feasible, it requires rendezvous instrumentation (possibly a Ladar) not currently planned for the Orbiter.

Table 3-20 presents a weight summary for the Intermediate Power Module.

3.3.2 Limited Capability Power Module

A limited capability concept is illustrated in Figure 3-64. It is, in essence, an enlarged Intermediate Power Module utilizing four PEP wings that would provide some 30 kW (regulated to 28 V) at beginning of line or some 35 kW (unregulated). It also has a two axis gimbal system that can supply maximum power at all body attitudes and solar angles relative to the orbital plane. But, in this case, adjacent arrays must be structurally connected, hence, an unmodified PEP assembly cannot be used.

Table 3-20. Intermediate OSM Power Module

Description	Weight
Solar array	955
Structure/mech	1,645
Module structure assembly	1,105
Gimbal/hinge assembly	
Counter balance	
Berthing provisions	540
Power distribution and regulation	3,302
Thermal control	1,373
Avionics	2,298
Instrumentation	102
Attitude control	1,930
Communication/data management	266
Total Weight (lb)	9,573

Features of this concept are listed in Table 3-21 and the discussion of array separation in the previous section (3.3.1) also applied to the Limited Capability Power Module.

3.3.3 Alternate Full-Capability Configuration

As previously described, the Reference Full-Capability Power Module could point any one of its five payload berthing ports in any arbitary direction, referenced to either earth centered or inertial coordinates, and hold that

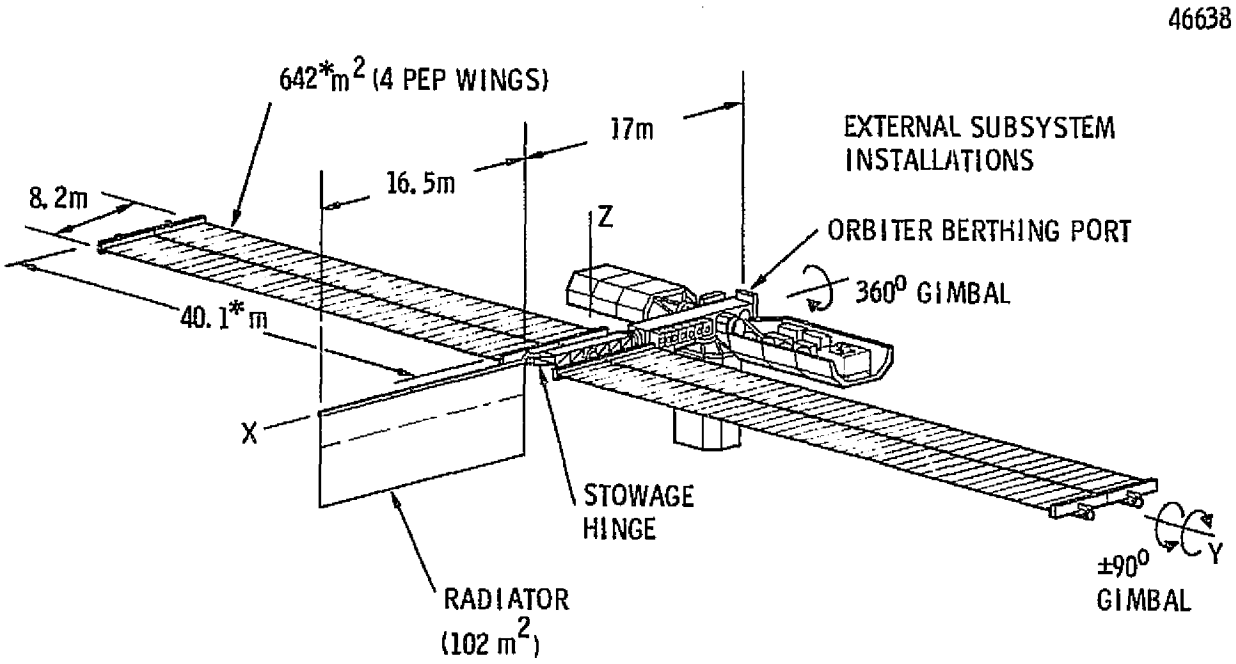

* SOLAR ARRAY BLANKET

Figure 3-64. Limited Capability Concept

Table 3-21. Features of Limited Capability Concept

- 35 kW—BOL, unregulated Power (4 PEP wings); 30 kW at 28 V
- Symmetric heat rejection— fixed radiator
- Two-axis gimbal on core structure
- Primary orientation—array axis (Y) in orbit plane
- Free-flying and orbiter-attached modes of operation
- 4 payload berthing ports—1 orbiter port
- CMG control — attitude maneuvering for desaturation
- 2 kbps command uplink; 64 kbps downlink
- Weight 20,319 lb

attitude indefinitely. It could not, however, point multiple payloads in arbitrary directions in different coordinates. Figure 3-65 illustrates a concept that can provide this versatile service. The configuration is essentially identical to the reference full-capability vehicle with one exception: the two-axis gimbal system has been removed from the center body. Integral

ORIGINAL PAGE IS
OF POOR QUALITY

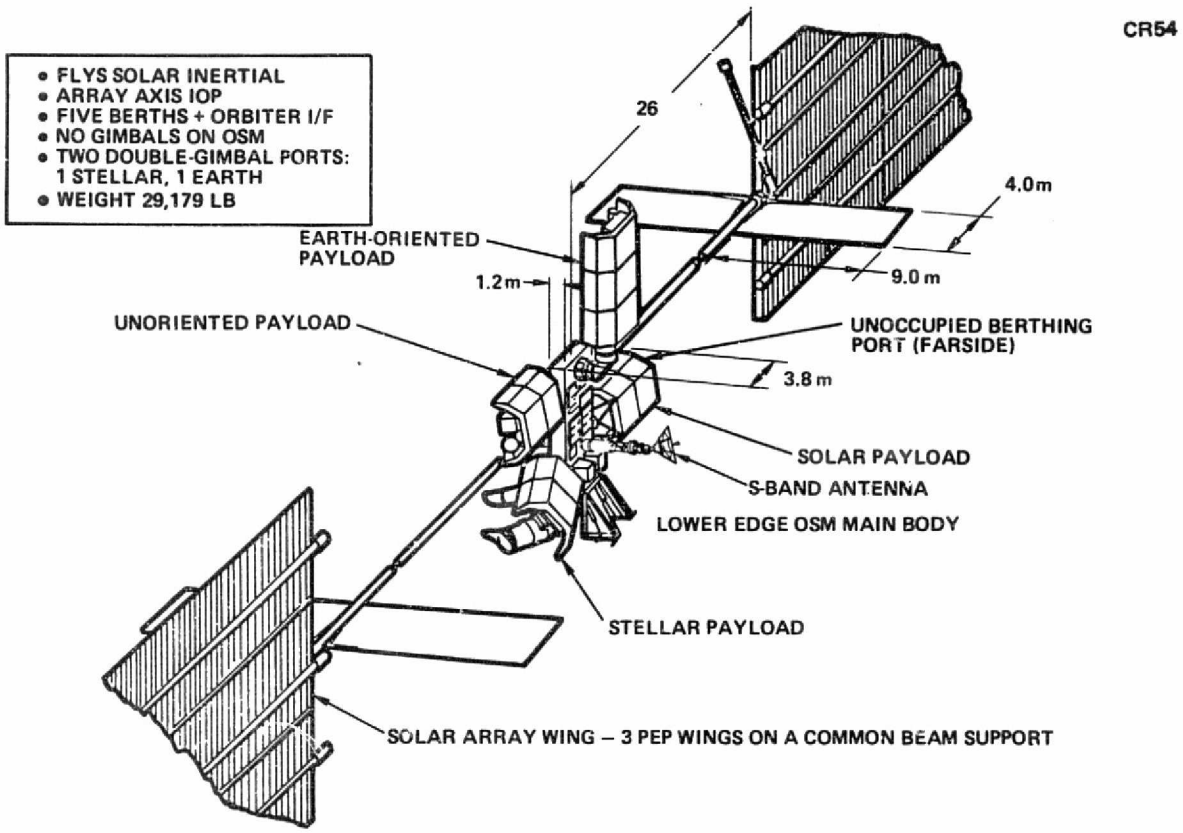

Figure 3-65. Full-Capability OSM - With Multiple Simultaneous Payload Orientation

berthing ports are, therefore, fixed with respect to the solar array. Hence, for the standard solar inertially stabilized flight attitude, directly attached payloads would be stabilized with respect to the sun. This is, of course, sufficient for a number of users (materials processing, life sciences, solar observation). To obtain payload pointing independent of the OSM subsystem core attitude, modular gimbal systems are attached to the berthing ports as shown schematically in Figure 3-66.

One technique for locating the payloads and gimbals is illustrated in the figure. The earth-viewing payload is located at the top of the core at the opposite end from the Orbiter berthing interface structure. The payload uses the gimbal kit capable of continuous 360 degree rotation and ± 90 degree range movement.

Material processing and/or life science payloads could be located at any of the fixed ports. The stellar and solar payloads are shown as being located

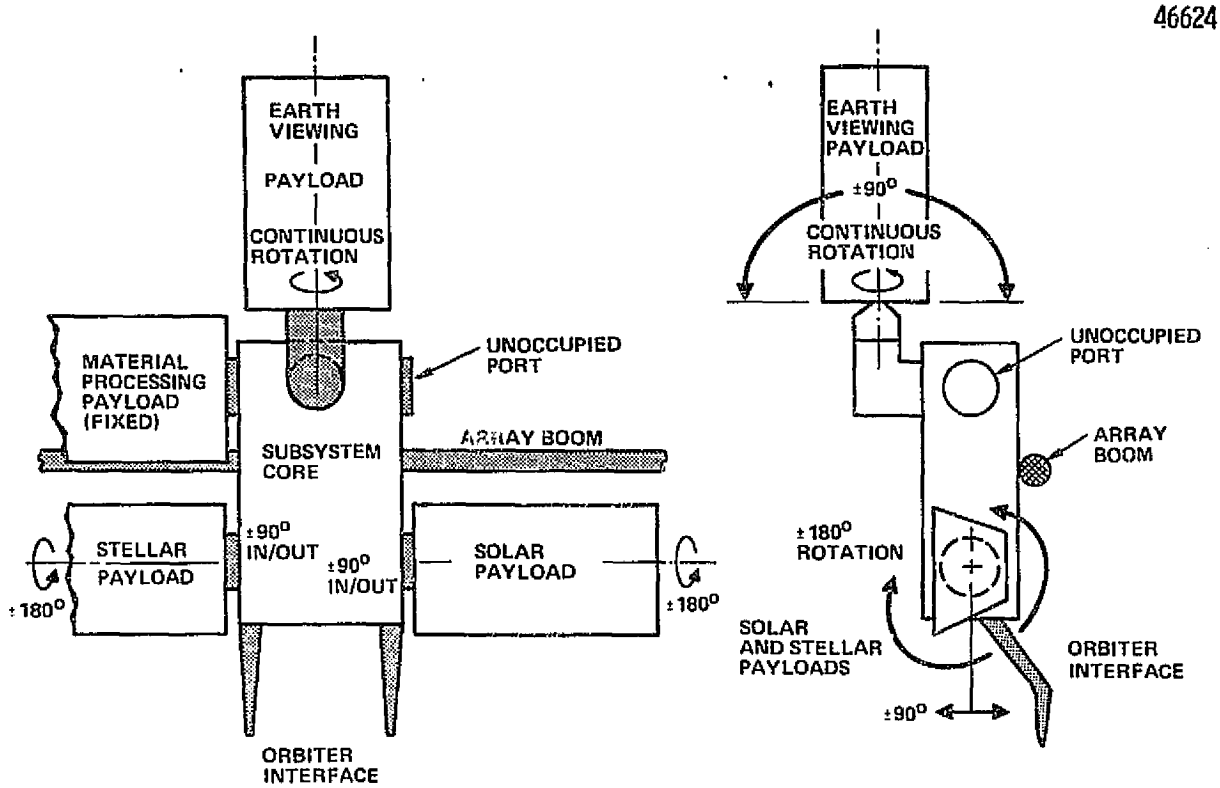

Figure 3-66. Gimbal Locations

in the lower portion of the core. Each of the two payloads uses a gimbal kit that allows ± 180 degree rotation about one axis and ± 90 degree hinge-type movement in the orthogonal direction.

As illustrated in Figure 3-67, all modular gimbal systems would utilize payload attachment interface identical to the integrated fixed port on the OSM core. Additionally, the interface of these gimbal systems that mate with the OSM are identical to that used on all payloads. Hence, any payload can utilize any gimbal system or, alternately, be berthed directly to the OSM core.

The earth-viewing gimbal system consists of a berthing port to which the payload is attached, a gimbal capable of continuous 360 degree rotation for orbit rate adjustments, a hinge with a ± 90 degree movement capacity for beta angle adjustments, and a berthing adapter to attach to the Power Module fixed berthing port.

ORIGINAL PAGE IS
OF POOR QUALITY

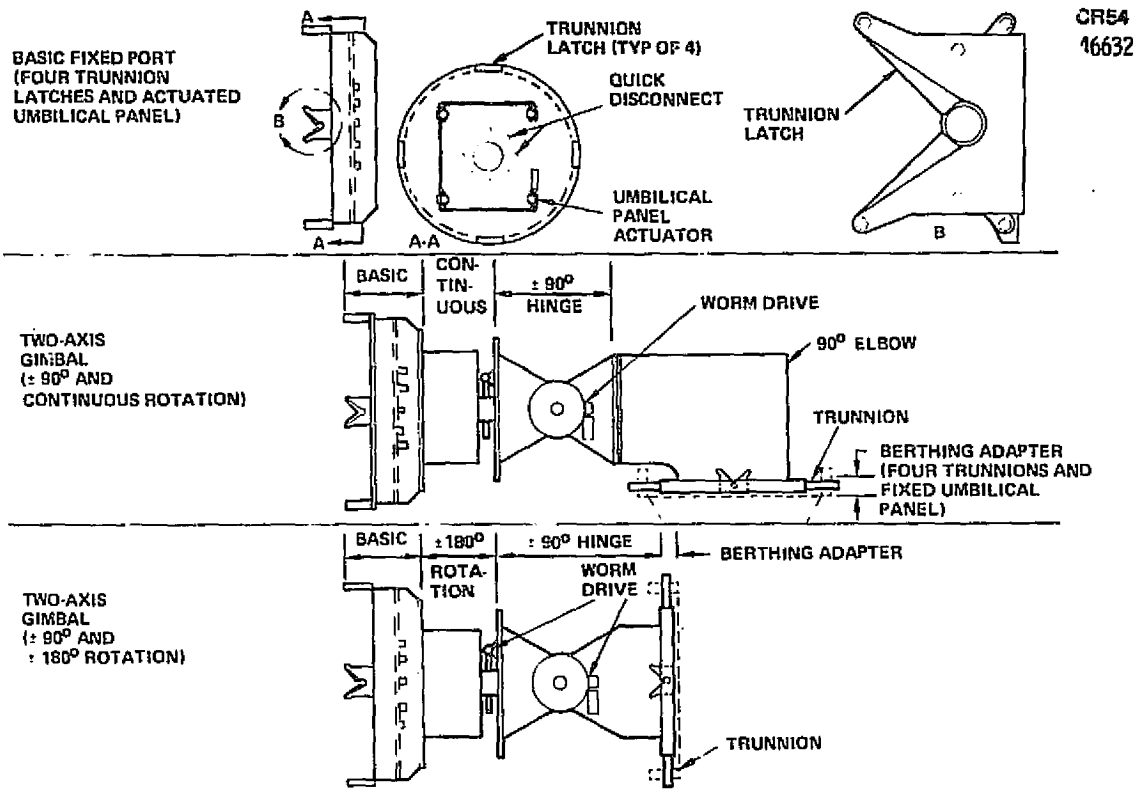

Figure 3-67. Modular Gimbal Design Concept

The stellar viewing gimbal system consists of the standard fixed port to which the payload is attached, a ± 180 degree rotational hinge, a ± 90 degree hinge, and a berthing adapter to attach to the Power Module.

As illustrated here, the total assembly has three two-axis gimbal systems. However, it should be noted that a capability to arbitrarily point one payload while holding others fixed in a solar inertial coordinate requires only one two-axis gimbal system (for example, the one associated with the earth-viewing payload in Figure 3-66. Thus, a pointing capability exceeding the reference configuration, which must point all payloads simultaneously in the same coordinates, can be achieved with the same number of gimbals. Hence, in comparison to the reference configuration, an equivalent or superior pointing performance can be obtained for the same degree of complexity while maintaining the capacity to grow this capability. It should also be noted that gimbals indicated for stellar and solar payloads are much simpler than one with a continuous rotation capability since they do not require either slip rings or rotating fluid joints.

In fact, it may be argued that this alternate vehicle is a simpler development task than that represented by the reference configuration. It requires no major moving parts in the core OSM (no gimbals) other than Thermal Control System (TCS) pumps. The modular gimbal systems (containing all actuators, slip rings and rotating fluid joints) are attached to the fixed berthing ports and a failure in these systems can be isolated so that it does not affect OSM subsystems or other payloads. Further, the modular gimbal system is easily returned to earth for overhaul if on-orbit repair is impractical. In the Reference configuration all electrical power and thermal control system fluid passes through the gimbal and failure affects all OSM and payload systems. While it is possible to design redundancy and a capacity for on-orbit repair, (a rotating fluid joint design described in this report features the ability to change dynamic seals without requiring TCS depressurization or removal from the loop) into these systems, such attributes are always cost factors. With the central gimbal on the reference configuration, it is particularly difficult to provide adequate access to the slip rings and rotating fluid joint. Thus, the difficulty of making repairs on orbit, combined with the fact that a failure can disable the entire Power Module, will translate to a requirement for exceptional reliability and service life in all gimbal components. This again is a cost factor. While the alternate configuration shown here would have a higher parts count, the factors discussed above indicate that cost, for an equivalent pointing capability and equal confidence in the vehicles reliability, would not significantly differ. Hence, this alternate offers an attractive ability to grow in pointing capability since modular gimbal systems may be added at any time during its operational life.

3.4 GROWTH OPTIONS

Growth options available to an orbitally stored OSM are indicated in Table 3-22. It is important to note that all these techniques can potentially result in total program savings through the use of common or evolutionary subsystems. Each, however, has unique advantages.

Conceptually, the simplest on-orbit growth would be through the Replication/ Siamese Twin (or Triplet, etc.) technique. Here another nearly identical OSM is constructed and attached to the existing vehicle with a suitable adapter. Since the only new design hardware is the adapter, additional

Table 3-22. OSM Growth Options

Growth Technique	Advantages	Disadvantages
On-Orbit		
Replication/Siamese twin	Low initial (scar) cost	Limited size flexibility, geometry limitations introduce operational limitations
Addition of subsystems	Minimum cost at time of uprating	Initial (scar) cost, practical limitations to size of growth increments, limited flexibility
Ground based uprating return and enlarge	Minimum initial (scar) cost, great flexibility	High cost at time of uprating, large system down time
New vehicle based on common subsystems	Minimum initial (scar) cost, great flexibility	High cost at time of uprating (unless earlier OSM is still required)

design, development, test, and evaluation (DDT&E) are minimized. Most provisions for summing the total capability can be incorporated in the second vehicle, hence little initial scar cost is necessary to insure that this option will be available. However, it is only possible to increase capability by an integer factor; thus this approach is not applicable if relatively small uprating s are needed. But perhaps the most serious failing of the Siamese Twin approach is found in the limited choice of geometry available in the the growth configuration. This can introduce many operational problems such as array shadowing, Orbiter approach corridor limits, and user viewing obstructions.

Addition of subsystems on orbit can result in minimum cost and lead time at the time when the uprating is undertaken, assuming appropriate provisions have been made for the growth. But the necessity for these provisions is a major disadvantage of this approach. Not only is a significant effort required during the development of the initial OSM, but also the path is inflexible because the growth path must be largely frozen at an early date. Perhaps the most serious consequence of this would be an inability to

accommodate a gross change in projected requirements. However, provisions for modest growth in some subsystem can be included at minimum initial cost. Thus, this approach remains attractive.

In ground based uprating, returning the OSM to earth for enlargement is an approach which would have great flexibility since the type and magnitude of the uprating need not be fully determined during design of the initial vehicle. Since the OSM must be stowed within the Orbiter and deployed or assembled on orbit, a requirement to reverse the process does not introduce significant difficulties. For these reasons, scar cost is also small in this approach.

While it is clear additional logistics costs are involved (to return the OSM), interruption of the programs supported by the OSM may be an even greater disadvantage inherent in this technique. At a minimum, several months would be required (if low initial scar costs are maintained) for ground operations. Additionally, logistics costs for return of applications or research modules must be included unless the uprating could be scheduled in a period of zero activity, an unlikely event if augmentation of OSM capability is required.

Construction of a new, uprated, vehicle based on subsystems and components of the existing design would provide the greatest flexibility so far as accommodating new requirements or utilization of new technology is concerned. It would also require the least initial scar. Additional cost, at the time of uprating would, of course, be relatively large. However, this approach would be particularly attractive if the original OSM can still be utilized. To explain with an oversimplified example: if an ability to support six users simultaneously is required and the existing OSM can only support two, construction of a new OSM to support the four additional users would be the preferred approach to growth rather than a plan which would enlarge the existing vehicle to totally meet the requirement.

In reviewing these growth techniques, it is noted that alternate scenarios can be constructed that will allow any of the listed approaches to be "best" for the particular set of circumstances. On the other hand, none should involve significant initial costs unless the on-orbit addition of subsystems

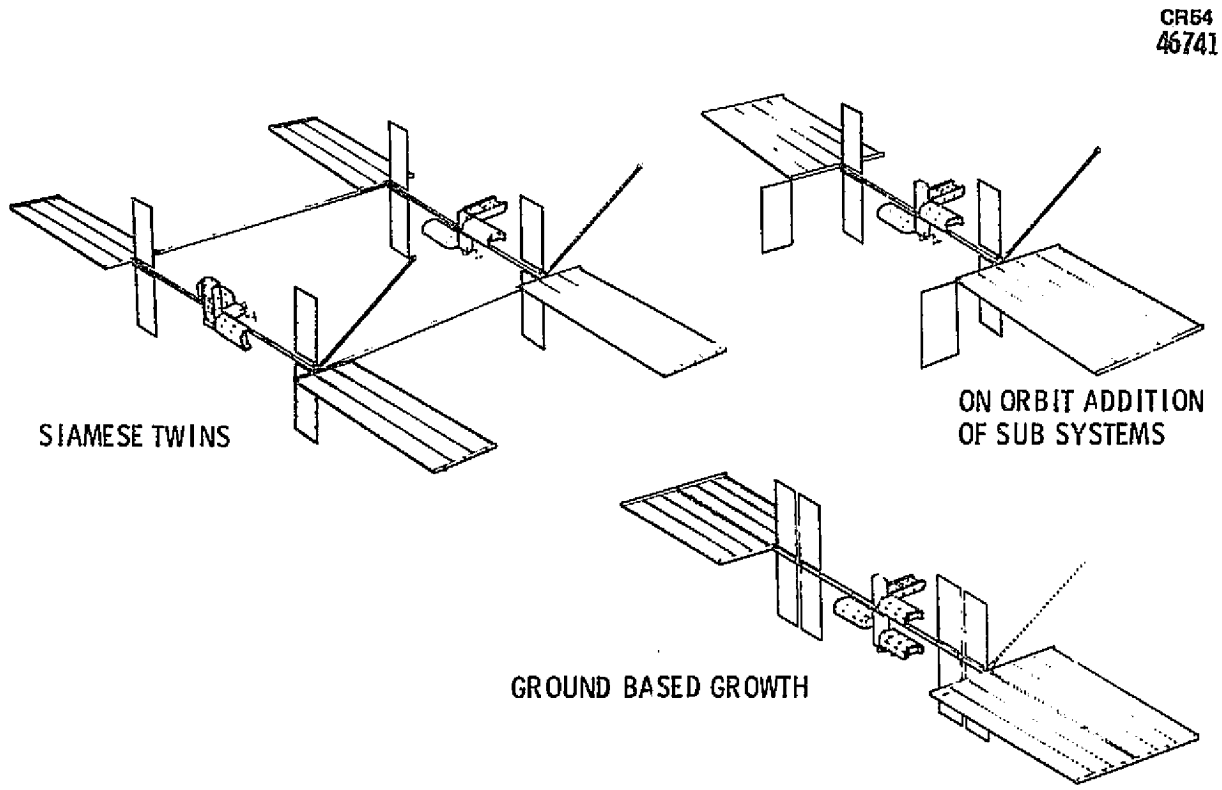

Figure 3-68. Power Module Growth Concepts

is carried to an extreme. But, the rationale for development of an evolutionary OSM is simply that future user scenarios are not firm at the time an OSM design must be frozen. Hence, in pursuing OSM development none of these growth options should be abandoned at an early date. Plans, utilizing requirements scenarios favorable to the particular approach, should be formulated for each technique during the Phase B studies and decision for implementation made during the Phase C preliminary design. Figure 3.68 illustrates these growth paths and they are discussed below.

3.4.1 Siamese Twins

While many attachment concepts exist for Siamese Twin configurations, the one shown in this figure has unique advantages. Two reference OSM's are joined by structural connections between the solar array booms. This allows the two subsystem cores (with payloads) to be independently gimbaled. Operational orientations would follow those outlined for the reference OSM. However, use of the maximum power (array perpendicular to the sun line, IOP) attitude would require considerable additions to the counter-

balance mass. Scar penalties in this case would depend on the operational design philosophy to a considerable extent. Minimum initial scar costs would be incurred if a requirement to handle maximum (jointly produced) power were not imposed upon the initial vehicle. Similarly, a decision to allow the two cores to operate as completely independent data systems would also reduce costs. Assuming these decisions, scars on the initial vehicle would consist of (1) provisions for the structural attachment, (2) an additional power buss with associated switches and slip rings running from the voltage regulators (or battery chargers) to the point of structural attachment, (3) mixing valves in the fluid lines to the radiators and fluid lines from these valves and the radiator return manifolds to the points of structural attachment, and (4) provisions, including signal and instrumentation lines, which would allow the second OSM to control the CMG's of the initial vehicle.

In this design option, only the second vehicle core would be capable of supporting a very high power payload (approximately 70 to 80 kW) and its power distribution and thermal control system would be so modified. In addition, it would also control the Siamese Twin attitude through use of its own and the twin's CMG's. It should be noted that initial scar costs must also include considerable analytical and test effort to verify that the final configuration can be assembled and operated. Assembly of the Siamese Twin configuration would be accomplished by first berthing the second vehicle in the aft portion of the Orbiter. This would allow the initial OSM to also be berthed in the normal forward position. With both vehicles berthed to the Orbiter, structural connections are made with EVA personnel utilizing MMU's. These connecting members would be telescoping, allowing the distance between cores to be increased after one is released from the Orbiter.

3.4.2 On-Orbit Addition of Subsystem

The reference OSM configuration was again used to study growth by on-orbit addition of subsystems. Here four additional PEP wings are connected to the original six — one wing added to each side of each array. Two radiators (integral to two of the additional wings) are also added. Core subsystems (CMG's, batteries, chargers, and voltage regulators) are augmented by attaching a module to the top of the OSM's center body. Since this uprating

is responsive to a requirement to support higher powered payloads, rather than additional numbers of payloads, additional docking ports, data systems or communications systems are not required.

These additions would be assembled by extravehicular activity (EVA) personnel using both the RMS and MMU's. Scars on the initial vehicle include: (1) provisions for structural, fluid, and electrical attachments at the ends of the array booms, (2) oversized pumps and lines in all TCS plumbing, (3) fluid and electrical bus lines to the structural attach points, (4) oversize slip rings and rotating fluid joint, (5) oversized (167 percent) power distribution system, (6) provisions for 67 percent additional power and coolant flow at at least one berthing port, (7) software provisions to control the new configuration (both the additional subsystems and the additional mass/inertia) and (8) mounting provisions and wiring for the additional sybsystem module.

Again, cost of these initial scars must include analytical and test work to prove that the growth vehicle can be assembled and operated.

3.4.3 Ground Based Growth

The example of ground based growth was studied as a new vehicle using previously developed components, but it is also representative of a configuration using subsystems from a returned vehicle. Essentially a twice sized reference OSM, this growth vehicle would employ 12 PEP array wings and have a capability of producing nearly 100 kW average power (unregulated, BOL).

Figure 3-69 is a more detailed illustration of this vehicle. Functionally, this configuration again meets a requirement for greater power in each payload rather than a requirement to support additional payloads. Hence, it retains the five payload capability of the reference OSM.

Omitting additional payload berthing ports in this type of growth is believed rational, since it is clear that the lowest cost approach to a requirement to support more payloads of the same power class would be replication of the original design. Also, if vastly different orbits were not required, both

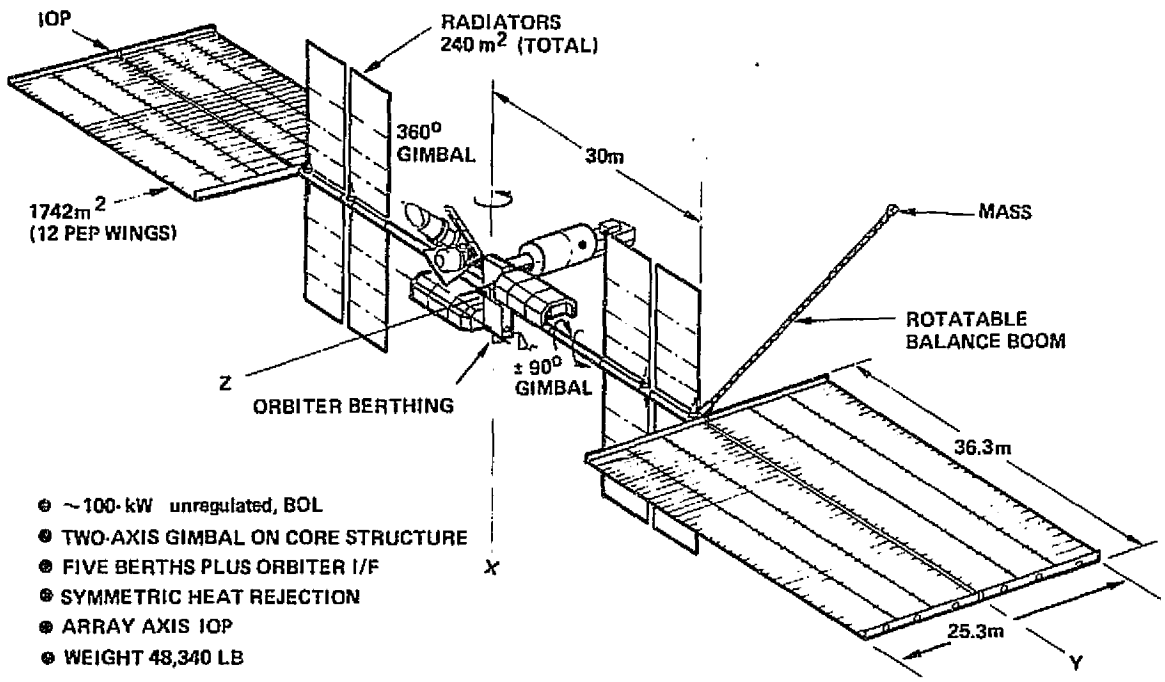

Figure 3-69. Growth Concept

could be serviced in a single Orbiter flight, and, hence, no significant advantage would be derived from concentration of support capability in one vehicle.

Common components between this growth concept and the original (reference configuration) OSM would include: (1) arrays and array deployment mechanisms, (2) radiators, (3) TCS pumps, valves, and disconnects, (4) batteries, battery chargers, and voltage regulators, (5) all communications and data system components (except wiring), (6) complete Orbiter berthing port including umbilicals, (7) payload berthing ports with exception of umbilicals, and (8) CMG's, sun sensors and associated electronics.

Other components that may be used, depending on detailed design trades, would include: (1) gimbals with actuators, (2) slip rings and rotating fluid joints, (3) berthing port umbilicals, and (4) core structure. Since orbital loads and required array slewing rates are very small, over design of

ORIGINAL PAGE IS
OF POOR QUALITY

gimbals and actuators to include both original and growth requirements should involve little initial scar penalty. Slip rings can, of course, be arranged in parallel gangs. Since their diameter will probably be set by structural stiffness considerations, it may again be reasonable to use a single design for both requirements. Also, it may be practical to over design the rotating fluid joint to allow twice the flow rate of the original requirement (unfortunately, they cannot be paralleled in any simple fashion), or it may be possible to use the earlier design by simply accepting a higher pressure drop across the rotating joint (requires higher pumping power). Berthing port umbilicals may either be oversized in the early design or paralleled in the growth version; however, overdesign would have a cost impact and paralleling may not be possible without an enlarged berthing port. It may also be practical to use the original core structure design by grafting on a section to hold the required additional batteries, chargers, regulators, and CMG's. This plan would be particularly attractive if the growth version uses identical data and communications systems components.

Perhaps the most interesting conclusion gained from studying this particular configuration is that a Power Module of this capacity (12 PEP array wings) could be packaged for launch by a single Orbiter. This largely results from employing the PEP arrays and deployment mechanisms. These were intentionally designed to fold into the minimum possible envelope, and, hence, ganged PEP arrays may be packed in a minimum volume. This design is discussed more thoroughly in Appendix A.

3.4.4 Comparison of Growth Options

In reviewing these growth options, it is obvious that all are feasible and, as stated before, possible program scenarios can be structured to dictate any of these options to be the most attractive. These scenarios are, of course, totally dependent upon future user requirements. It must be recalled that growth, as discussed here, is not required unless individual payloads need more power than can be supplied by the original OSM. If future growth is only in the number of users, replication of the original facility would undoubtedly be the favored course. As mentioned in the requirements section of this report, firm requirements for OSM services beyond the early to mid-80's are most speculative.

Similarly, the attractiveness of any of these growth paths may well change as interactions between the growth plan and the original OSM design is better understood. Hence, all of the growth paths mentioned here should be carried into Phase B studies, and a decision to adopt any particular plan should be delayed until the last possible moment. While a preliminary decision may be made at the end of Phase B, accurate estimation of the real scar costs requires very detailed knowledge of subsystems. Hence, it would seem prudent to delay the final decision until a Phase C preliminary design review (PDR).

At this point in time, it would seem unlikely that there would be a significant growth in power requirements for a single payload without some growth in the numbers of payloads using OSM services. For this reason, planning for growth by construction of a new vehicle based on common components seems particularly attractive. Additionally, this type of growth would not only have the lowest initial scar costs, but also the greatest flexibility to both accommodate changing requirements and take advantage of technology advances.

Section 4
PROGRAMMATICS

This section provides basic PEP (Payload Extension Package) information and addresses the principal issues associated with PEP proposed for Shuttle/ Spacelab users as well as the Power Module concepts required to satisfy the needs of free-flying users.

The early phase of the study identified the need for two basic types of Orbiter Service Modules (OSM's) – a shuttle attached version now designated PEP and a free-flyer called the Power Module. The subsequent phase concentrated on PEP to a level sufficient to establish a baseline concept and supporting data. The last phase of this study (1) evaluated variations in Power Module concepts considering ranges of requirements, (2) identified a reference design concept and alternate concepts, and (3) developed cost sensitivities for the principal requirements design drivers. The latter should be useful as concepts and requirements are played together in working toward a future baseline concept.

The following subsections provide cost, schedule and funding data for PEP and Power Module, Power Module variation information, and a current planning baseline for the OSM Program.

The programmatic results of this study support the following future considerations:

- PEP should be pursued for an October 1979 go-ahead with the objective of capturing Spacelab Mission Number 2.
- Performance requirements of the Power Module should be confirmed. (User requirements uncertainty is a critical issue which could swing the cost of the Power Module significantly.)
- Phase B studies should address incremental orbital growth and design derivatives in conjunction with an improved set of user requirements and candidate missions.

4.1 PEP

Based upon an assessment of user needs and traffic rate, the PEP baseline has been defined as consisting of one set of flight hardware and Ground Support Equipment (GSE) with interface accommodations for Orbiter number 102 including one Remote Manipulator System (RMS). Although the quantity of Orbiters and RMS units is subject to review as traffic model revisions occur, the recurring costs of these elements is not great and will not significantly influence funding if subsequent units are desired. Schedule analysis has indicated the feasibility of capturing Spacelab Mission Number 2 in October 1981; hence, an October 1981 IOC date for PEP is highly desirable, and, therefore, calls for an October 1979 authority to proceed (ATP).

Analysis shows that PEP ground operations at the Kennedy Space Center (KSC) can be conducted without facility impacts. Periodic maintenance is planned at the contractor facility.

While user needs in 1984 and beyond are considered soft, all indications are that Spacelab missions will continue and, consequently, will require the performance offered by PEP; hence, the operational life of PEP is considered indefinite. As a practical matter, PEP operations are expected to continue and to lead to a parallel use along with the later operational Power Module.

4.1.1 PEP Costs

Figure 4-1 shows PEP costs in millions of 1978 dollars. The $47 million cost includes design, development, test, and evaluation (DDT&E) and production cost for one flight unit. These costs include $4.5 million for Orbiter accommodations which (it is assumed) will be charged to PEP.

The solar array costs are based upon Solar Electric Propulsion (SEP) technology and low-cost solar cells. Included are all costs required to design, develop, build test and deliver a flight quality solar array along with shipping and handling type Ground Support Equipment (GSE).

Subsystems costs include detail design development, manufacturing, and testing to the system level final assembly point and checkout tasks. Interface kit costs are similar to subsystem type costs. These kits are delivered to KSC for installation during the ground operations phase.

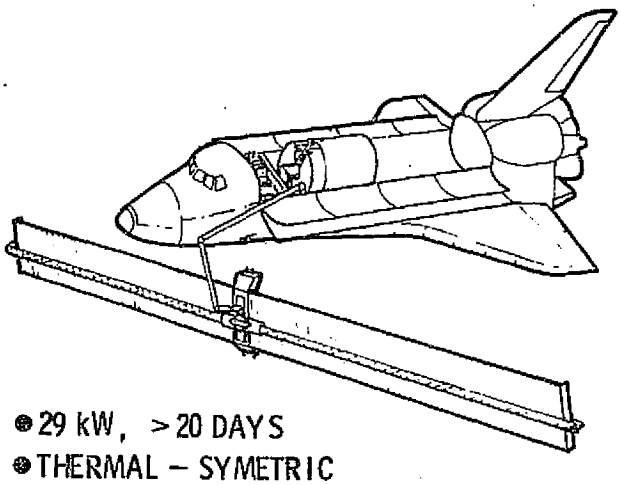

- 29 kW, >20 DAYS
- THERMAL – SYMETRIC WITH ORBITER
- 28.5° TO SUN SYNCHRONOUS
- ALTITUDE – 160 TO 300 nmi
- ALL ATTITUDE CAPABILITY
- WEIGHT: 2,010 LB

ELEMENT	DEVEL	PROD	TOTAL
ORBITER MODS	3.8	0.7	4.5
SOLAR ARRAY	7.4	8.5	15.9
SUBSYSTEMS	(8.9)	(5.5)	(14.4)
STRUCT/MECH	2.7	0.5	3.2
POWER DISTR	2.1	1.7	3.8
THERMAL	0.2	0.2	0.4
AVIONICS	1.8	1.8	3.6
INTERFACE KITS	2.1	1.3	3.4
SYSTEM LEVEL	7.7	2.8	10.5
OPS SUPT	0.5	1.2	1.7
TOTAL	28.3	18.7	47.0

Figure 4-1. PEP Cost (Millions of 1978 Dollars)

System level costs include program management, systems engineering and integration, final assembly and checkout, one set of GSE, development test hardware, and subcontractor management. System level qualification will be accomplished by flight test.

Operations costs include the nonrecurring cost for simulation and tracking, and recurring cost of spares and ground operations through the initial operating capability (IOC) launch.

4.1.2 PEP Schedule and Funding

The PEP schedule and funding are shown in Figure 4-2. With ATP in October 1979, PEP can be ready for operational use within two years. Based on the OSTS June 1978 option cargo manifest, PEP can accommodate Spacelab Mission Number 2, a mission currently identifying a need for additional power and duration. PEP operational integration, however, requires early coordination with Spacelab Number 2 mission planners.

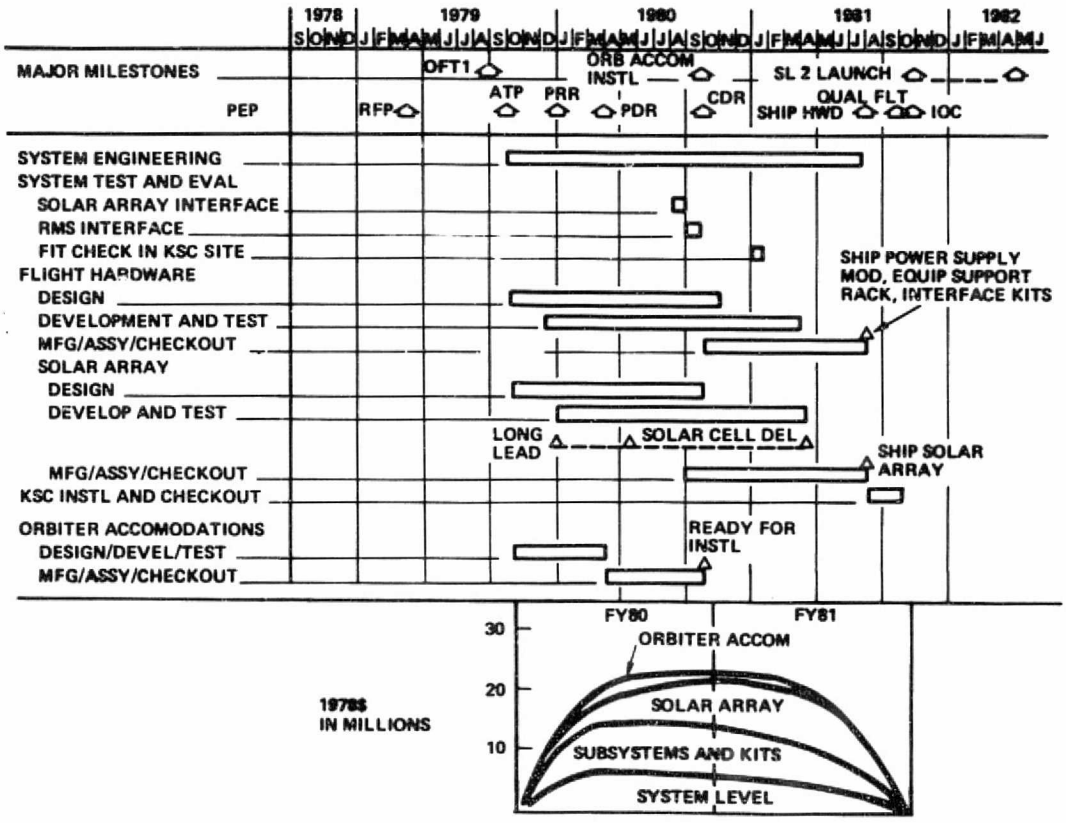

Figure 4-2. PEP Schedule and Funding

The PEP development schedule is paced by long lead procurement of solar cells and solar cell production rate. The schedule calls for long lead procurement to be initiated at the preliminary requirements review (PRR) which requires early agreement on the PEP design definition adequate to issue procurement specifications at that time. The solar array development which will require close system level integration in order to meet schedule is considered the first critical path of the PEP schedule. The power system voltage regulators – considered the second critical long lead procurement – also should be initiated at PRR. Current planning calls for the solar array – and the PEP end items to be delivered separately to the Kennedy Space Center (KSC) where they will be joined together and checked out prior to flight.

The Orbiter accommodations are scheduled to be available for installation in the Orbiter between the completion of the flight test program and the first operational flight.

Funding for this program is estimated at $22 million in FY 1980 and $25 million in FY 1981.

ORIGINAL PAGE IS
OF POOR QUALITY

As noted on the chart, there is some uncertainty as to the ultimate launch date for Spacelab Mission Number 2. If this mission were to fly in May of 1982, for example, the recommended program approach would be to hold the October 1979 go-ahead date, thus relieving schedule pressure, deferring long lead procurement items, and controlling early manpower buildup. Through careful balancing of schedule and manpower loading, FY 1980 funding requirements could be reduced significantly from $22 million to the $5-8 million range without significantly increasing runout costs in 1978 dollars.

4.2 POWER MODULE

Since the midterm of the OSM study, emphasis has been placed upon the definition of Power Module concepts. Since user requirements have not been firmly quantified, a referenced design has been developed in lieu of a baseline. A baseline will be established once better resolution of user needs has been made during the Phase B studies. This subsection provides cost schedule and funding data for the reference design which can be used for planning purposes at this time.

4.2.1 Power Module Costs

The Power Module reference design concept costs are summarized in Figure 4-3 totaling $139 million for DDT&E and production of one flight unit. Included are one set of GSE and initial spares for early mission operations.

Again, as with PEP, the solar array cost represents the total cost through delivery of the solar array to KSC. The low development cost for the solar array reflects the benefit of array development accomplished under PEP.

Subsystem DDT&E reflects significantly greater costs in order to provide orbital autonomy and increased services to users including a 10 Mbps communications and data systems.

System level costs include program management systems engineering and integration, final assembly and checkout, one set of GSE, system test hardware, subcontractor management and initial spares.

The reference design and costs will be updated during the Phase B studies.

COST AND FUNDING

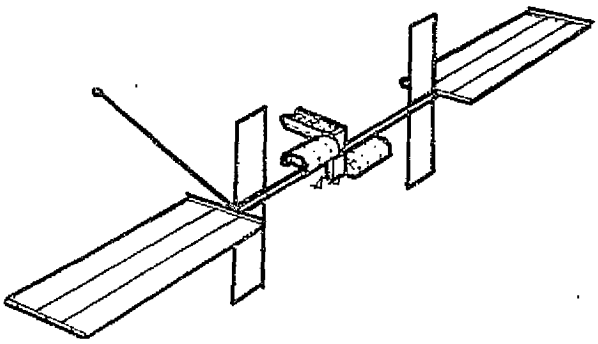

ELEMENT	COST – $M 1978 DEVEL	PROD	TOTAL
SOLAR ARRAY	1	26	27
SUBSYSTEMS	(32)	(30)	(62)
STR/MECH	10	4	14
POWER DIST	7	10	17
THERMAL	3	3	6
AVIONICS	6	8	14
CONTROL	6	5	11
SYSTEM LEVEL	26	24	50
TOTAL	59	80	139

CHARACTERISTICS

- 35 kW (EOL-REGULATED)
- REGULATED, UNREGULATED AND PEAK POWER SERVICE
- 5 USER PORTS; 1 ORBITER PORT
- ALL AXIS POINTING
- 10 MBPS DATA HANDLING
- 28,422 LB

Figure 4-3. Reference Design Power Module

4.2.2 Power Module Schedule and Funding

The reference design Power Module schedule and funding is shown in Figure 4-4. As indicated, the period from ATP to launch, including two months at KSC, is three years. This schedule reflects the development of the Power Module hardware including one flight article delivered as two end items (the Power Supply Module and the solar array) to KSC for joining prior to launch. The schedule and funding are formatted in similar fashion as for PEP.

A key aspect of this schedule is the early long lead procurement of solar cells with delivery commencing only three months after PRR. The solar array manufacturing schedule requires this time because of the large number of solar cell needs and monthly production rate limitations. This early commitment of flight hardware is practical because the Power Module solar array is assumed to be substantially common with the PEP solar array. The Power Supply Module portion of the flight hardware involves substantial development of subsystems required for orbital autonomy with critical design review (CDR) scheduled at 15 months after ATP.

ORIGINAL PAGE IS
OF POOR QUALITY

CR54
47791

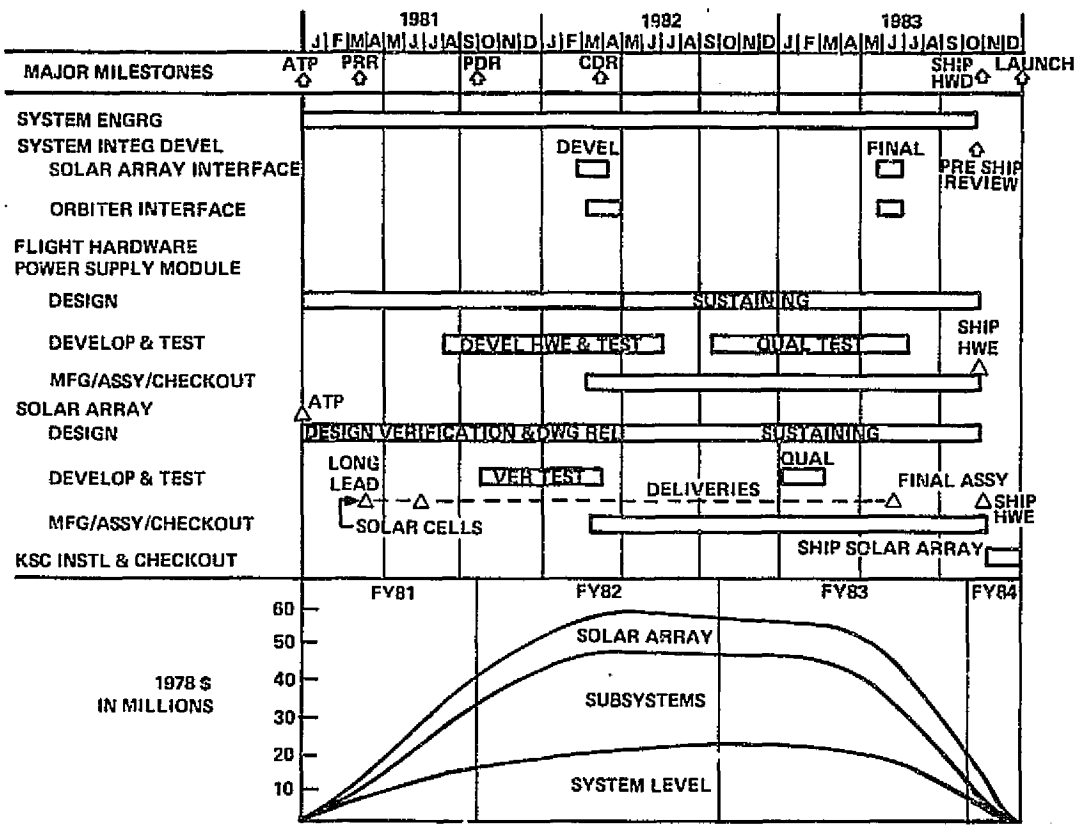

Figure 4-4. Power Module Schedule And Funding

Funding for this program is estimated at $20 million in FY 1981, $61 million in FY 1982, $53 million in FY 1983, and $5 million in FY 1984.

Orbiter accommodations are not shown and have not been defined in this study. These accommodations will be defined during the next study or Phase B studies and should consist mainly of interface verification with possibly minor modifications.

4.3 POWER MODULE VARIATIONS AND COST SENSITIVITIES

This section illustrates the principal Power Module requirement cost drivers depicting their cost sensitivities and rough order of magnitude (ROM) costs for typical alternate Power Module concepts spanning the requirements spectrum.

This data should be useful for continuing future analyses. It displays the major parametrics of requirements versus Power Module costs which should be considered in the next round of analyses prior to, and in the course of, establishing firm design requirements and a baseline Power Module.

4.3.1 Electrical Power Subsystem

Because of the high cost nature of this subsystem, which represents nominally 50 percent of the hardware cost of the Reference Design Power Module ($44 million of $89 million), data was generated to allow quantification of cost as a function of power level. Design definition was prepared for 25 kW, 35 kW and 50 kW systems. Figure 4-5 "Electrical Power Subsystem Cost Sensitivity" displays Electrical Power Subsystem (EPS) cost sensitivity in terms of the two subsystems which comprise the total, i. e., the solar array and power distribution subsystems.

The latter includes cabling/junction box hardware plus battery/charger, regulators and subsystem integration. Over the range of interest, hardware cost per kilowatt is nominally $1.25 million taking into account learning curve effects.

Therefore, it is evident that establishing a realistic power level based on user requirements is fundamental in establishing a cost effective baseline design.

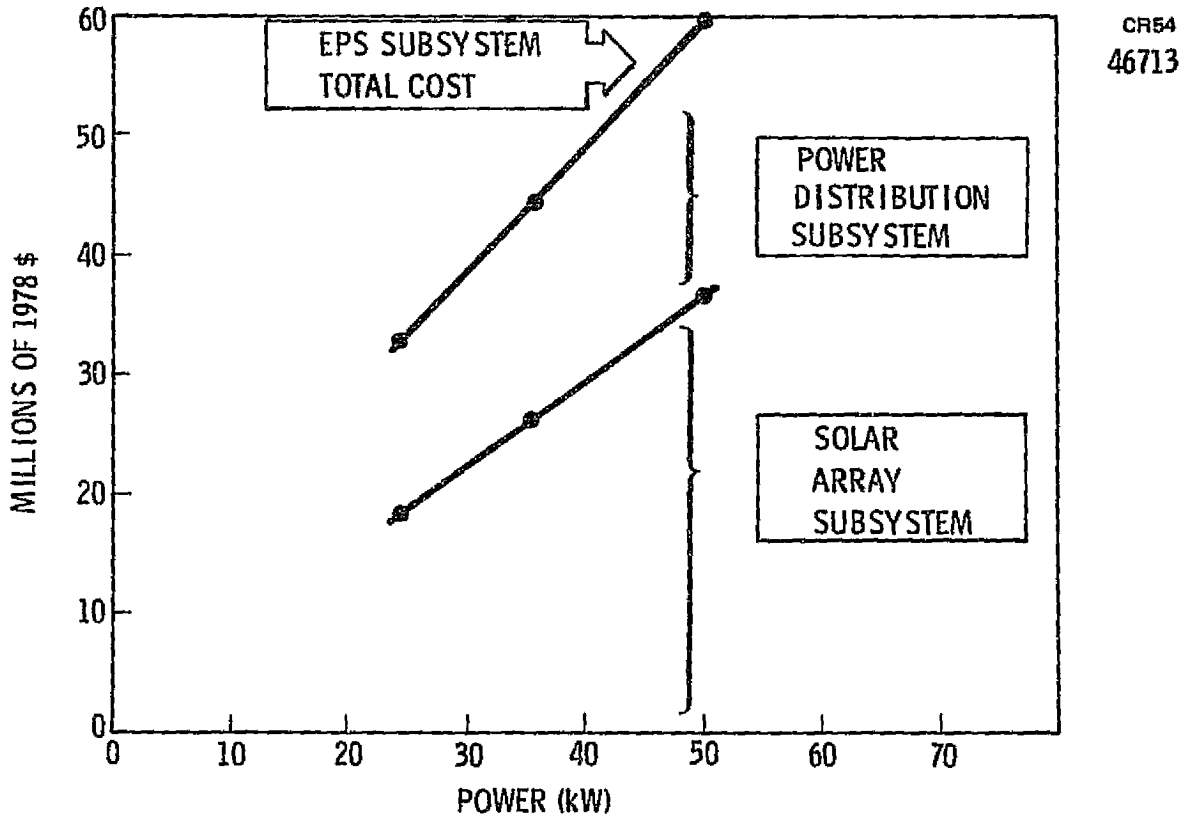

Figure 4-5. Electrical Power Subsystem Cost Sensitivity

4.3.2 User Service Options

Table 4-1 defines three cases with varying users' services with regard to number of ports, power services and gimbal service. Case 1 is equivalent to the services provided by the limited design Power Module. Case 2 is equivalent to the Reference Design Power Module, and Case 3 adds capability over and above the Reference Power Module.

Table 4-1. Definition of User Services Options

	Number of ports	Power services	Gimbal service
Case 1 (limited concept)	4 Payload	2—30 kW, 28 V 35 kW, 113 V 2—15 kW, 28 V 35 kW, 113 V	None
	1 Orbiter	1—28 kW, 28 V	
Case 2 (reference concept)	5 Payload	2—35 kW, 28 V 128 kW, 113 V 3—15 kW, 28 V 41 kW, 113 V	Integral beta hinge and 360 degree orbit rate gimbal
	1 Orbiter	1—28 kW, 28 V	
Case 3	5 Payload	5—35 kW, 28 V 128 kW, 113 V	Same as case 2 plus stellar gimbal kit (±180 degree rotation, ±90 degree hinge)
	1 Orbiter	1— 35 kW, 28 V	

Case 1 provides unregulated power to the four payload ports and the one Orbiter port. Unregulated power is provided to only two of the payload ports. There is no capability for handling peak power or gimbaling at any of the ports. By definition, this case is called "limited."

Case 2 provides regulated power to all six ports (five payload and one Orbiter). Unregulated power is provided to the five payload ports with two of these ports capable of deliverying 128 kW peak power. In addition, one port provides gimbal services for an earth viewing payload. This case provides the nominal capability and is called the "Reference Design Power Module."

Case 3 has the same number of ports as Case 2 but with all five payload ports capable of providing peak power to the payloads. It also provides gimbal services for earth viewing and stellar pointing for multiple simultaneous pointing capability. This case should be considered as greater capability than Case 3.

Figure 4-6 compares the hardware costs of the three cases defined on the previous chart. (Hardware costs exclude system level, e. g., the $139 million Reference Power Module contains $89 million hardware cost and $50 million system level cost.)

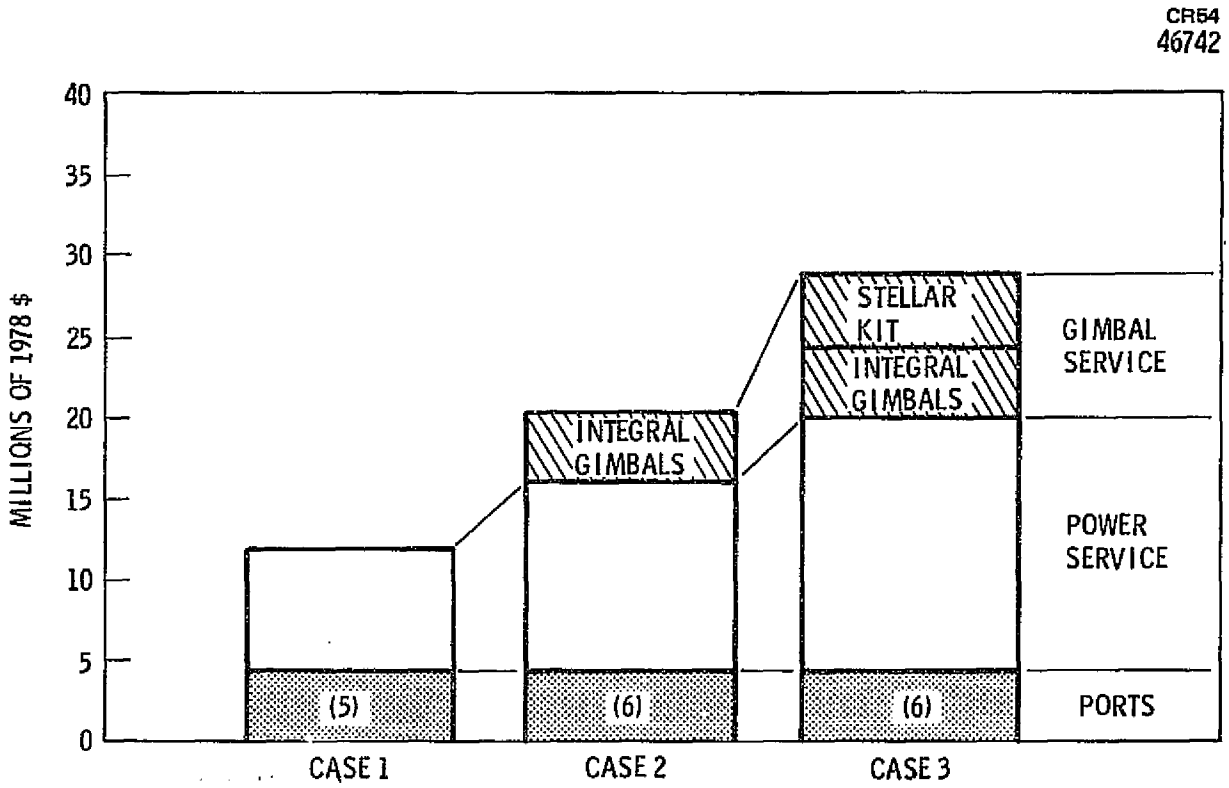

Figure 4-6. Power Module User Services Hardware Cost Sensitivity

Cost for ports shows little sensitivity. Cost is for structure only and the recurring cost of a sixth port is only $100,000.

The $4.5 million cost variations for power service between Case 1 and Case 2 reflects wiring and umbilicals for an additional port plus the provisions for peak power at two ports. The $3.2 million increase from Case 2 to Case 3 reflects the provisioning of peak power services at all five payload ports. Again, depending on user needs, this is an unlikely but possible configuration.

Gimbal service comparison makes the assumption that Case 1 has no gimbals whatsoever—a programmatic departure from the limited configuration. The Case 2 integral gimbals cost is estimated at $3.9 million, while the Stellar gimbal kit for Case 3 (which together with integral gimbals, allows multiple simultaneous pointing) is $4.5 million.

The total cost sensitivity between Case 1 and Case 3 is $16.2 million. The Case 1-Case 2 differential is $8.5 million.

Power Module costs, therefore, will vary significantly based on the Power Service and Gimbal Service reflected in the design requirements. Accordingly, these requirements should be based on a more definitive understanding of user requirements.

4.3.3 Power Module Variations

Cost sensitivity to user requirements, together with configuration design and operational considerations, has lead to the definition of variations summarized in Figure 4-7.

The Intermediate Power Module would consist nominally of a PEP type solar array plus the additional free-flyer subsystems.

The Limited Power Module would consist nominally of a PEP type solar array plus the additional free-flyer subsystems.

CR54
46712

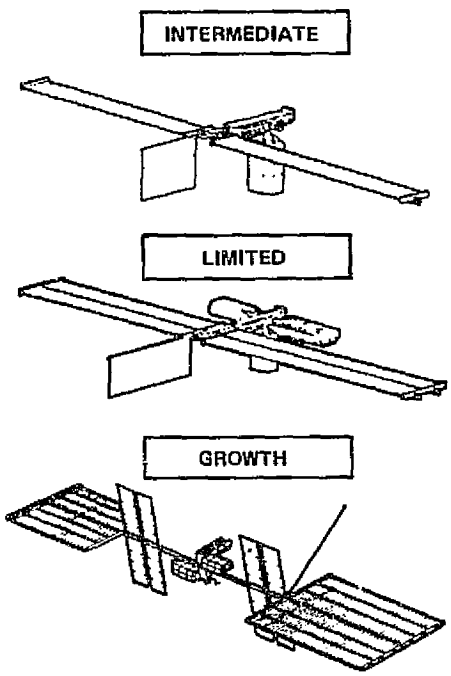

CHARACTERISTICS

- PEP SIZE ARRAY: 16 kW BOL, UNREGULATED
- APPLICATIONS: FREE-FLYING PALLETS, HIGH INCLINATION
- 3 PAYLOAD PORTS
- WEIGHT 9,573 LB
- $ 11 M COMMON DEVELOPMENT WITH REFERENCE DESIGN
- COST $ 68 M

- 35 kW BOL, UNREGULATED
- AUSTERE VERSION OF FULL CAPABILITY CLASS
- 4 PAYLOAD PORTS
- WEIGHT 20,319 LB
- COST $ 106 M

- ~100 kW CLASS BOL, UNREGULATED
- SERVE HIGH-POWER USERS IN LATE 1980'S
- WEIGHT 48,342 LB
- $ 20 M COMMON DEVELOPMENT WITH REFERENCE DESIGN
- COST $ 198 M

Figure 4-7. Power Module Variations

ORIGINAL PAGE IS
OF POOR QUALITY

The Growth type Power Module would have significantly higher power level capability along with increased multiple user services capability.

Table 4-2 shows the ROM cost breakout of the Limited and Intermediate Power Modules in comparison with the Reference Design Power Module. The costs are summarized by subsystem and system level. The solar array costs shown as a subsystem reflect the total cost of delivering a solar array to the prime contractor for installation on the Power Module. Each of these cost estimates assumes that the PEP development has preceded the Power Module development. Cost breakout for the Growth Type Power Module is not provided at this time and requires further analysis to be meaningful.

Table 4-2. Power Module Cost Comparison

Elements	Reference design		Limited design		Intermediate design	
Subsystems						
Struct/mechanical	14		11		6	
Power distribution	17		13		8	
Thermal control	6		5		3	
Inst, comm and data	14		9		5	
Stab and control	11		11		11	
Solar array	27		18		10	
(Subtotal)		(89)		(67)		(43)
Systems						
Proj mgmt/sys engr	23					
Sys test and eval	4					
GSE, spares, logistics FACO, and GRD/FLT OPS support	23					
(Subtotal)		(50)		(39)		(25)
Total cost	139		106		68	

4.4 OSM PROGRAM PLANNING BASELINE

Figure 4-8 illustrates the OSM Program Planning Baseline. It implements PEP development at the beginning of FY 80 with flights starting by the end of CY 1981 and a Referenced Design Power Module development in FY 81 with launch in the first quarter of CY 1984.

The plan calls for PEP proceeding into Phase C/D development subsequent to the current definition phase. The Power Module studies would proceed

ORIGINAL PAGE IS
OF POOR QUALITY

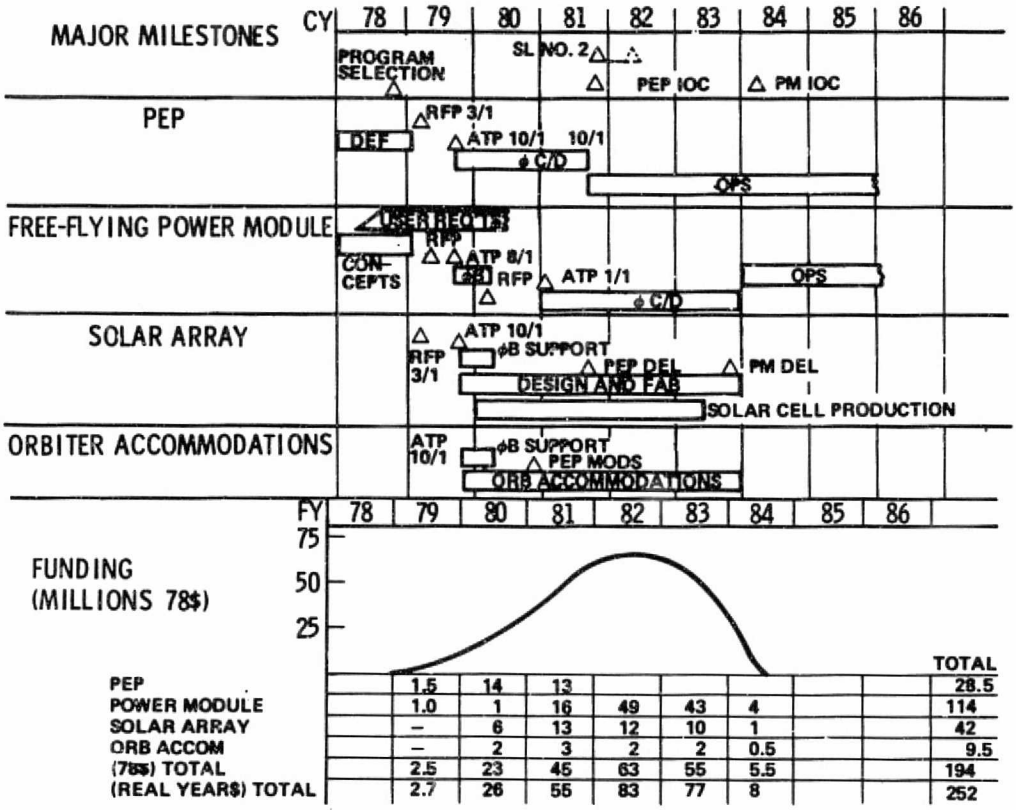

Figure 4-8. OSM Program Planning Baseline

into Phase B prior to phase C/D. All procurements would be on a competitive basis. In addition to the Phase B studies during 1979/1980, the plan calls for continued user requirements analyses which would definitize the design requirements of the Power Module.

To provide the solar array for both PEP and Power Module, solar array is assumed to be a separate competitive procurement.

The Orbiter contractor, it is assumed, accomplishes Orbiter accommodations including the accommodations for both PEP and Power Module.

Funding is provided for planning purposes showing annual and total funding by program line item and total program. This funding includes estimates for the Phase B study work as well as Orbiter accommodations allocation for the Power Module which are not included in the preceeding subsections of this section.

The schedule and funding should be considered flexible and can be adjusted on a cost effective basis consistent with realigning PEP IOC with a later Spacelab Mission Number 2 flight date as well as a later Power Module IOC need date.