General Disclaimer

One or more of the Following Statements may affect this Document

- This document has been reproduced from the best copy furnished by the organizational source. It is being released in the interest of making available as much information as possible.

- This document may contain data, which exceeds the sheet parameters. It was furnished in this condition by the organizational source and is the best copy available.

- This document may contain tone-on-tone or color graphs, charts and/or pictures, which have been reproduced in black and white.

- This document is paginated as submitted by the original source.

- Portions of this document are not fully legible due to the historical nature of some of the material. However, it is the best reproduction available from the original submission.

Produced by the NASA Center for Aerospace Information (CASI)

FINAL REPORT

FEASIBILITY STUDY OF GRAPHITE EPOXY ANTENNA FOR A MICROWAVE LIMB SOUNDER RADIOMETER (MLSR)

(NASA-CR-158351) FEASIBILITY STUDY OF GRAPHITE EPOXY ANTENNA FOR A MICROWAVE LIMB SOUNDER RADIOMETER (MLSR) Final Report (TRW Defense and Space Systems Group) 81 p HC A05/MF A01 CSCL 09C G3/32

N79-19191

Unclas 16674

REPORT NO. 8710.7.79-3

7 FEBRUARY 1979

SALES NO. 34661.00

CONTRACT NO. 955258

APR 1979
RECEIVED
NASA STI FACILITY
ACCESS DEPT.

TRW
DEFENSE AND SPACE SYSTEMS GROUP
ONE SPACE PARK • REDONDO BEACH • CALIFORNIA 90278

FINAL REPORT

FEASIBILITY STUDY OF GRAPHITE EPOXY ANTENNA FOR A MICROWAVE LIMB SOUNDER RADIOMETER (MLSR)

REPORT NO. 8710.7.79-3

7 FEBRUARY 1979

SALES NO. 34661.00

CONTRACT NO. 955258

This work was performed for the Jet Propulsion Laboratory, California Institute of Technology, sponsored by the National Aeronautics and Space Administration under Contract NAS7-100.

TRW

DEFENSE AND SPACE SYSTEMS GROUP

ONE SPACE PARK • REDONDO BEACH • CALIFORNIA 90278

TECHNICAL CONTENT STATEMENT

This report contains information prepared by TRW Defense and Space Systems Group under subcontract to Jet Propulsion Laboratory. Its content is not necessarily endorsed by the Jet Propulsion Laboratory, California Institute of Technology, or the National Aeronautics and Space Administration.

ABSTRACT

This report presents results of a feasibility study to design graphite epoxy antenna reflectors for a Jet Propulsion Laboratory Microwave Limb Sounder Instrument (MLSR). Two general configurations of the offset elliptic parabolic reflectors are presented that will meet the requirements on geometry and reflector accuracy. The designs consist of sandwich construction for the primary reflectors, secondary reflector support structure and cross-tie members between reflector pairs. Graphite epoxy materials of 3 and 6 plies are used in the facesheets of the sandwich. An aluminum honeycomb is used for the core. A built-in adjustment system is proposed to reduce surface distortions during assembly. The manufacturing and environmental effects are expected to result in surface distortions less than .0015 inch (RMS) and pointing errors less than .002 degree.

		Page
1.0	INTRODUCTION AND SUMMARY	1
2.0	DESIGN REQUIREMENTS	3
2.1	Geometry Requirements	3
2.1.1	Primary Reflectors	3
2.1.2	Secondary Reflectors	3
2.1.3	Assembly Envelope Dimensions	3
2.2	System Accuracy Requirements	3
2.2.1	Pointing	3
2.2.2	Surface Contour Distortions	3
2.3	Systems Information	4
2.3.1	Orbits	4
2.3.2	Scanning	4
2.3.3	Environments	4
3.0	CONCEPTUAL DESIGNS	6
3.1	Primary Reflector Design	6
3.2	Secondary Reflector Design	8
3.3	Assembly Concepts	10
3.4	Antenna-Spacecraft Interface	14
3.5	Thermal Control System	16
4.0	THERMAL CONDITIONS	17
5.0	TRADE STUDY RESULTS	22
5.1	Structural Model	22
5.2	Material Properties	26
5.3	Thermal Distortion Results	35
5.4	Structural Loads and Stiffness	38
6.0	WEIGHT ESTIMATES	41
7.0	MANUFACTURING PROCESS	43
7.1	Tooling	43
7.2	Fabrication Process	44
7.3	Contour Measurement	44
8.0	PROPOSED DEVELOPMENT PLAN	47
	APPENDIX A	49

LIST OF FIGURES

		Page
1.	Envelope Dimensions for Microwave Limb Sounder	5
2.	Primary Reflector Design - MLSR	7
3.	Reflector-Rib Adjustment Concepts - MLSR	9
4.	Antenna Concept A - MLSR	11
5.	Antenna Concept B - MLSR	12
6.	Antenna Interface Arrangements	15
7.	Intelsat V Thermal Analysis Heating Cases	18
8.	Transverse Thermal Gradient Versus Time	19
9.	Planform View of Rib Model Elements	23
10.	Planform View of Reflector Model Elements	24
11.	Coordinate System and Mid-Plane Dimensions	25
12.	Concept A Structural Model, X-View	27
13.	Concept A Structural Model, Y-View	28
14.	Concept B Structural Model, X-View	29
15.	Concept B Structural Model, Y-View	30
16.	Parameters for Thermal Distortion Analysis	36
17.	Manufacturing Hardware Flow for Microwave Limb Sounder Radiometer	45
18.	Proposed Development Program Plan	48

LIST OF TABLES

		Page
1.	Summary of Joint Details	13
2.	Assumed Temperature Conditions	21
3.	Typical Physical and Thermal Properties of Various Sandwich Structures	31
4.	Sandwich Mechanical Properties	32
5.	Material Selection - MLSR Configuration	33
6.	Material Mechanical Properties	34
7.	Thermal Distortion Analyses Results - MLSR	37
8.	Design Loads and Stiffness Evaluation	40
9.	Weight Estimates	42

1.0 INTRODUCTION AND SUMMARY

This report presents the results of a feasibility study to conceptually design graphite epoxy antennas for a Microwave Limb Sounder Radiometer (MLSR). The work was performed for the Jet Propulsion Laboratory under Contract No. 955258.

The Microwave Limb Sounder Radiometer system is a pair of offset elliptic paraboloid reflectors mounted with orthogonal fields of view and consisting of a primary reflector, secondary reflector and receiver optics for each antenna in the pair. The MLSR observes millimeter wavelength thermal emissions from the earth's atmospheric limb to obtain wind, temperature, pressure and chemical constituent measurements. The principal objectives of this study are: 1) To present reflector conceptual designs that will meet the reflector contour RMS and pointing accuracy requirements, as specified in the statement of work; 2) determine manufacturing methods needed to produce the precision reflectors; and 3) provide a ROM cost estimate to design, develop, test and deliver one qual and three flight units.

Results of the study show that a graphite epoxy honeycomb shell with a backup rib structure will meet the RMS surface distortion requirements for conservative estimates of thermal environments. The pointing accuracy was not satisfied for all assumed temperature conditions; however, the temperatures used in the analyses were considered to be conservative for MLSR low earth orbit applications. A more exact heat transfer analysis, coupled with the spacecraft radiation effects, is expected to show compliance with this requirement for all flight conditions except short term eclipse transients that produce large fore-to-aft temperature gradients. A manufacturing concept has been formulated that will permit accurate adjustment between the reflector shell and rib structure prior to final attachment of the two structural components. This approach is expected to yield less than 1 mil RMS surface distortion due to manufacturing effects.

In response to Task (a), (1), (G) of the JPL Statement of Work, the feasibility associated with producing a graphite epoxy reflector to twice the precision of the baseline design by calendar year 1982 is addressed here. Three facets of the design are crucial to providing a precision instrument - manufactured shape, thermal distortion in orbit and stability relative to loss of moisture content. These are briefly examined below.

The improved manufactured shape (<0.0005 inch RMS) may be achieved by the use of high precision tooling coupled with post-fabrication adjustment. Precision tooling would be required with a contour of 0.0002 inch RMS versus the 0.0005 inch RMS baseline. Tooling costs would be doubled, but the technology is currently available. Thermal distortion in orbit could be further reduced by the utilization of 6 or 9 plies of GFRP material compared to the 3 or 6 plies baseline. This would result in a moderate increase in the weight of the unit. Creep resulting from changes in the moisture content would be further minimized by the use of a moisture barrier, such as a conformal coating to prevent the movement of moisture in or out of the GFRP materials. Additional materials process control and testing is required to support these more stringent requirements. Overall, the added program costs would be twenty-five to fifty percent of the baseline costs.

A summary of the envelope and performance requirements is presented in Section 2.0. Conceptual designs are discussed in Section 3.0 and thermal conditions used in the deflection analyses are presented in Section 4.0. Results of the trade studies and a weight summary are in Sections 5.0 and 6.0. The manufacturing process and proposed development plan are presented in Sections 7.0 and 8.0.

2.0 DESIGN REQUIREMENTS

The design requirements, as taken from the statement of work, relate primarily to the geometry and accuracy of the primary reflector. Specific requirements on the secondary reflector and spacecraft interface geometry were not defined; hence data were assumed or scaled from the envelope drawing of Figure 1 in the statement of work. A summary of the requirements, as used in the conceptual design process, are summarized below.

2.1 Geometry Requirements

2.1.1 Primary Reflectors

a) Elliptical Planform

Major Axis - 1.50 meters
Minor Axis - 0.75 meters

b) Focal Length - 1.20 meters

c) Surface Contour - Offset Paraboloid

2.1.2 Secondary Reflectors

a) Planform - Not defined
b) Surface Contour - Offset Paraboloid
c) Focal Length - Not defined (0.2 M assumed)

2.1.3 Assembly Envelope Dimensions

Defined in Figure 1.

2.2 System Accuracy Requirements

2.2.1 Pointing

Antenna electrical boresight shall deviate no more than .002° or 1/32 of the antenna 3 db full beamwidth at 200 GHz in the intended service environment.

2.2.2 Surface Contour Distortions

a) Manufacturing Requirement: .0015 inch RMS to a best fit parabola.

b) Manufacturing Goal: .0008 inch (RMS)

c) Environmental Effects: Not defined

Assumed Values
Thermal < 1×10^{-3} inches (RMS)

d) Overall: Not defined

Assumed
Thermal < 1×10^{-3} inches (RMS)
Manufacturing < 1×10^{-3} inches (RMS)
Overall $\leqq 1.5 \times 10^{-3}$ inches (RMS)

2.3 Systems Information

2.3.1 Orbits

Orbit	Altitude	Inclination	Condition
1	250 Km	60°	Shuttle attached
2	700 Km	60°	Free flyer from Shuttle launch

2.3.2 Scanning

Scanning Angle - 7°
Period - 70 seconds
Motion - Sinusoidal

2.3.3 Environments

a) Shuttle launched
b) Orbits as defined previously

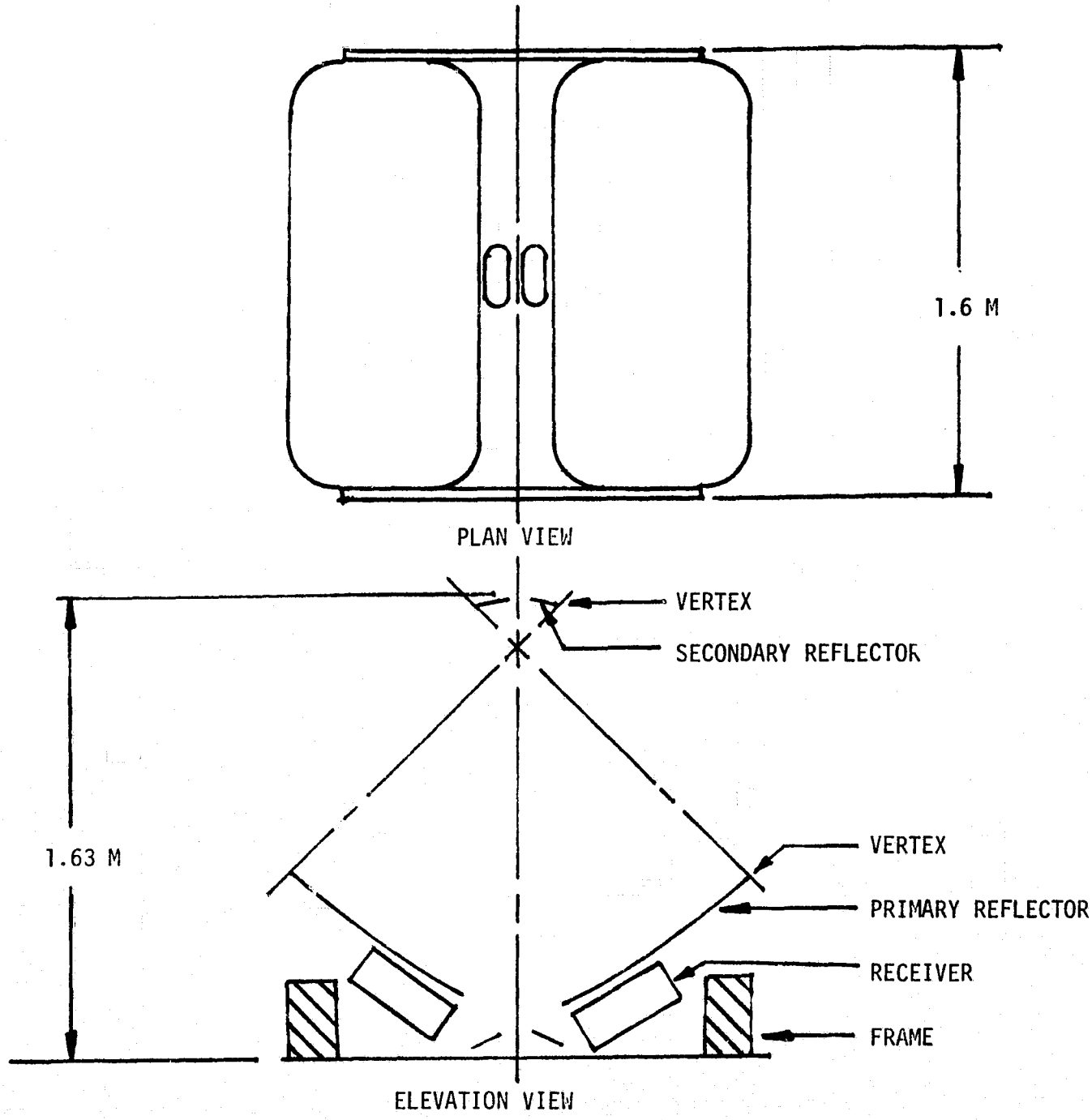

FIGURE 1 ENVELOPE AND BASIC DIMENSIONS

3.0 CONCEPTUAL DESIGNS

To achieve the primary design requirements, as specified in the previous section, a couple of design configurations and a variety of composite materials were considered. Since the offset elliptic paraboloid requirement explicitly defines the primary reflector planform and contour geometry, design variations were considered only in materials, secondary reflector supports, cross-ties between reflector pairs and antenna/spacecraft attachment methods. The surface contour inaccuracies arise from two principal sources - thermal and manufacturing techniques. The thermal effects are controlled by use of thermal coatings and insulation to minimize temperature changes and temperature gradients, and by the selective use of composite materials with low coefficients of thermal expansion (CTE's). The manufacturing effects are controlled by use of precision molds for the reflector fabrication, and careful attention to the manufacturing processes for laying up and curing the composite materials used in the reflector construction. Inaccuracies that may arise during the assembly of the reflector to the support structure are minimized by means of poast-fabrication adjustment capabilities between the two elements before final attachment is made. Potential errors due to changes in moisture content will be limited to acceptable values by process control and assembly in low humidity environments.

3.1 Primary Reflector Design

For the MLSR primary reflector design, the use of a sandwich construction is selected for both the surface shell and the backup rib structure (Figure 2). The reflector shell would consist of 3 plies of unidirectional GY70 graphite epoxy cloth for each facesheet and a 1/4-inch thick aluminum honeycomb core. A fine unidirectional weave cloth is selected (50 ends per inch) to provide a smooth surface finish. An alternative possibility is a 6-ply GY70 facesheet to further reduce the thermal expansion and improve the isotropic characteristics. A relatively thin honeycomb is chosen to minimize the shell bending stiffness relative to the backup rib structure.

The rib structure shown in Figure 2 would be constructed from flat sandwich plates consisting of 6-ply GY70 cloth facesheets and 1/2-inch thick aluminum

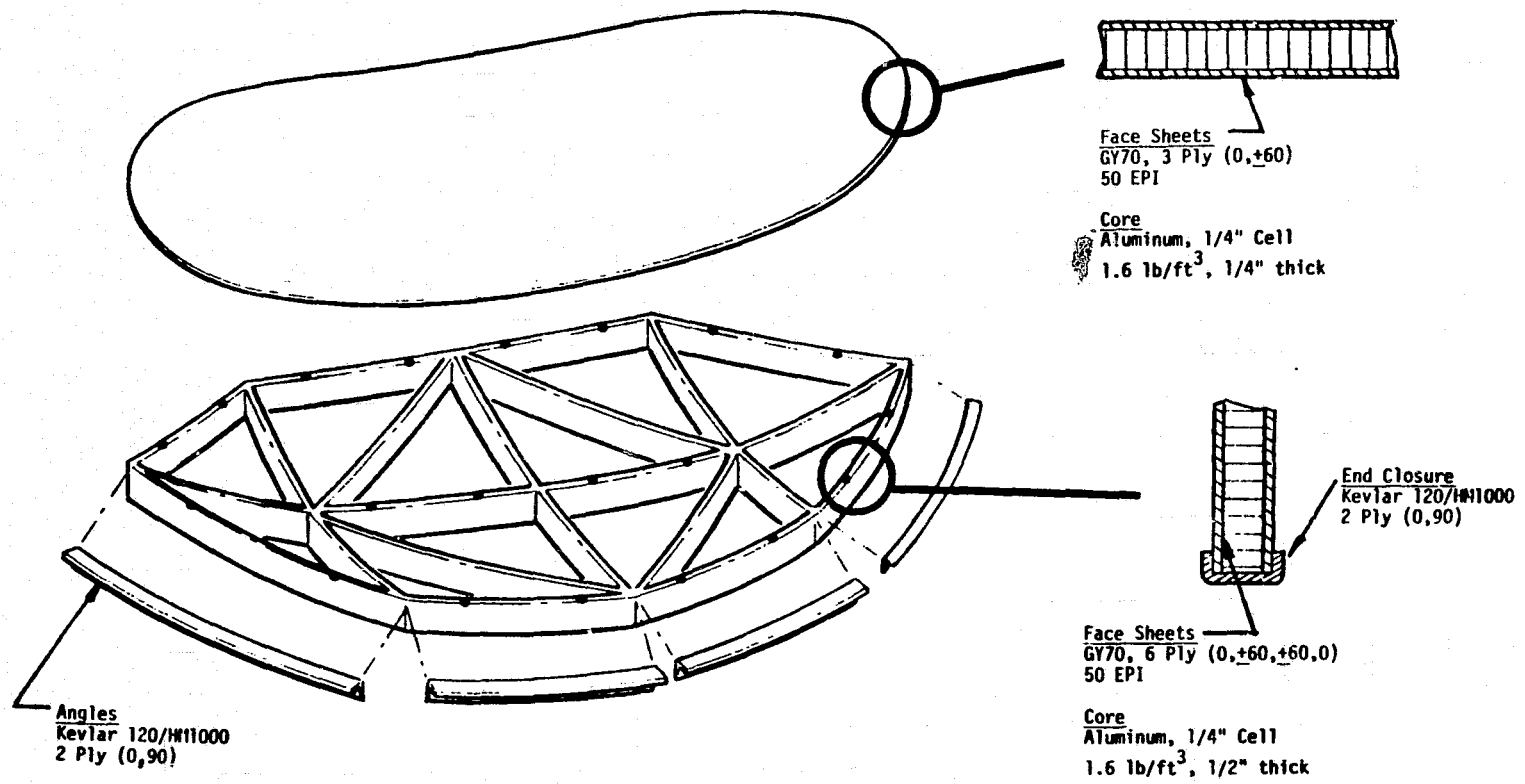

FIGURE 2 PRIMARY REFLECTOR DESIGN - MLSR

honeycomb core. The ribs would be four inches deep, and the edge opposite to the reflector-rib interface would have a channel-type edge closure of 2-ply Kevlar 120 and HM1000 twill cloth. The central longitudinal rib would be a continuous member and would extend beyond the reflector edges to provide a means of attaching cross-ties between the two reflectors. Rib intersections would be locally reinforced as required.

To achieve the stringent manufacturing RMS levels for the MLRS reflectors, a built-in adjustment capability is planned for the reflector-rib interface. Two concepts, as illustrated in Figure 3, are being considered. The plan is to mate the two assemblies on the contour measuring machine. The adjustment feature is incorporated at a uniform spacing around the perimeter of the rib assembly, with a few additional points on the center rib. The Type 1 concept requires small cutouts in the ribs, with threaded inserts in the aft face of the reflector and the inside edges of the rib. A turnbuckle type bolt with a right and left-hand thread and a center-mounted knurled nut is rotated to induce relative displacement between rib and shell. Contour readings and RMS levels are determined after each adjustment. Once an acceptable surface contour is achieved, then the relative position of rib and shell is permanently fixed by adding 2-ply Kevlar 120/HM 1000 angles along the inside and outside edges of every rib-reflector interface.

The Type 2 adjustment concept consists of tubes imbedded in the aluminum honeycomb at the appropriate location. Bolts are inserted from the aft edge of the rib through the tube and into threaded inserts on the aft side of the reflector shell. After the proper contour is achieved by rotating the bolt in the insert, the lock nuts are tightened and the angles installed, as described in Type 1.

3.2 Secondary Reflector Design

The secondary reflector design requirements were not specified in the work statement; hence the conceptual design is very general. The configuration is assumed to be an elliptic offset paraboloid, probably less than eight inches along the major axis. Because of the small size, a thin machined titanium reflector should meet the thermal distortion requirements. The secondary reflectors would be shimmed and bolted to the secondary reflector support frame, with a joint capable of providing proper position and angular alignment between the primary and secondary reflectors.

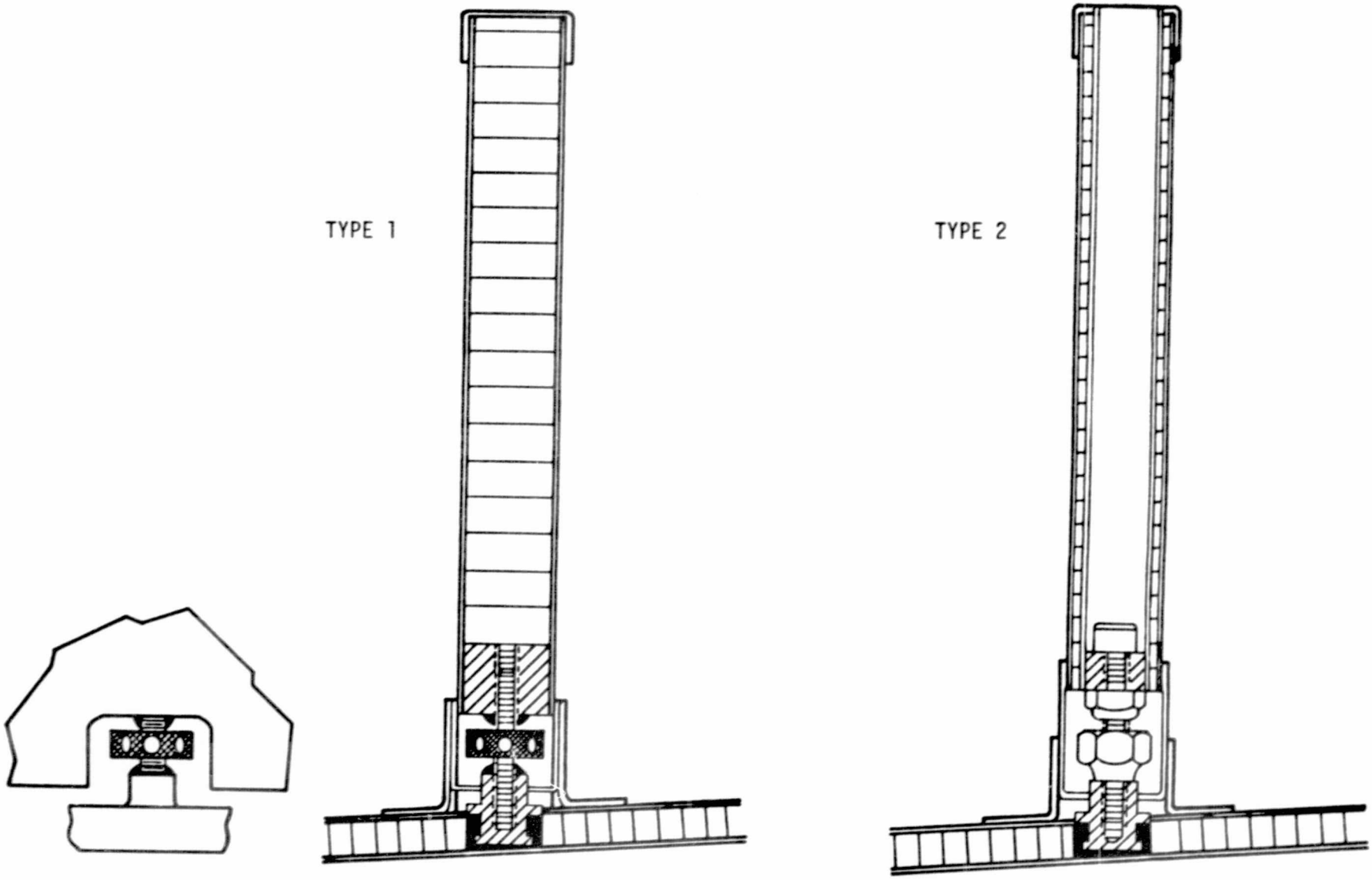

FIGURE 3 REFLECTOR-RIB ADJUSTMENT CONCEPTS - MLSR

3.3 Assembly Concepts

The geometric arrangement of the MLSR requires a common focal point for the reflector pairs, but with a right angle relationship between the focal axis of each reflector. With the secondary reflectors set aft of the focal point about 0.2 meter, a support arrangement is required for the secondary reflectors that does not block the field of view of either primary reflector. Two candidate concepts were identified and are illustrated in Figures 4 and 5. Concept A uses twin beams running from the central longitudinal rib ends out to a common support point for the secondary reflectors. Cross-ties between the primary reflector ends are added to provide rigidity. Intermediate cross-ties provide strength and stiffness for the assembly, and carry the interface fittings that attach the antenna assembly to the spacecraft. Concept B is similar, except only a single secondary reflector support beam is used, but with braces to increase the beam lateral stiffness.

All beams, as shown in Figures 4 and 5, that support the secondary reflectors and interconnect the two primary reflectors are of composite sandwich construction identical to the reflector to provide a uniform thermal expansion. The beams are cut from a flat sandwich plate of 3-ply GY70 facesheets and 1/4-inch aluminum honeycomb core. The secondary reflector support beams are 3-1/2 inches deep, the upper and lower cross-tie members are 4 inches deep and the intermediate cross-tie members are 6 inches deep.

A summary of the assembly joints that are initially selected for the configurations are presented in Table 1. Because of the composite material construction, bonded joints are the primary means of attachment. It is planned that the two primary reflectors would be connected together in an assembly jig, with the intermediate cross-ties being shimmed at the center of the assembly to achieve proper spacing and orientation. Splice plates would be added to the joint for strength and stiffness. The upper and lower cross-ties and secondary reflector support beams would then be added by shimming and bonding. To achieve proper alignment of the secondary reflectors and receiver optics, it is planned that these units be bolted to the assembly in such a manner as to permit shimming and angular alignment.

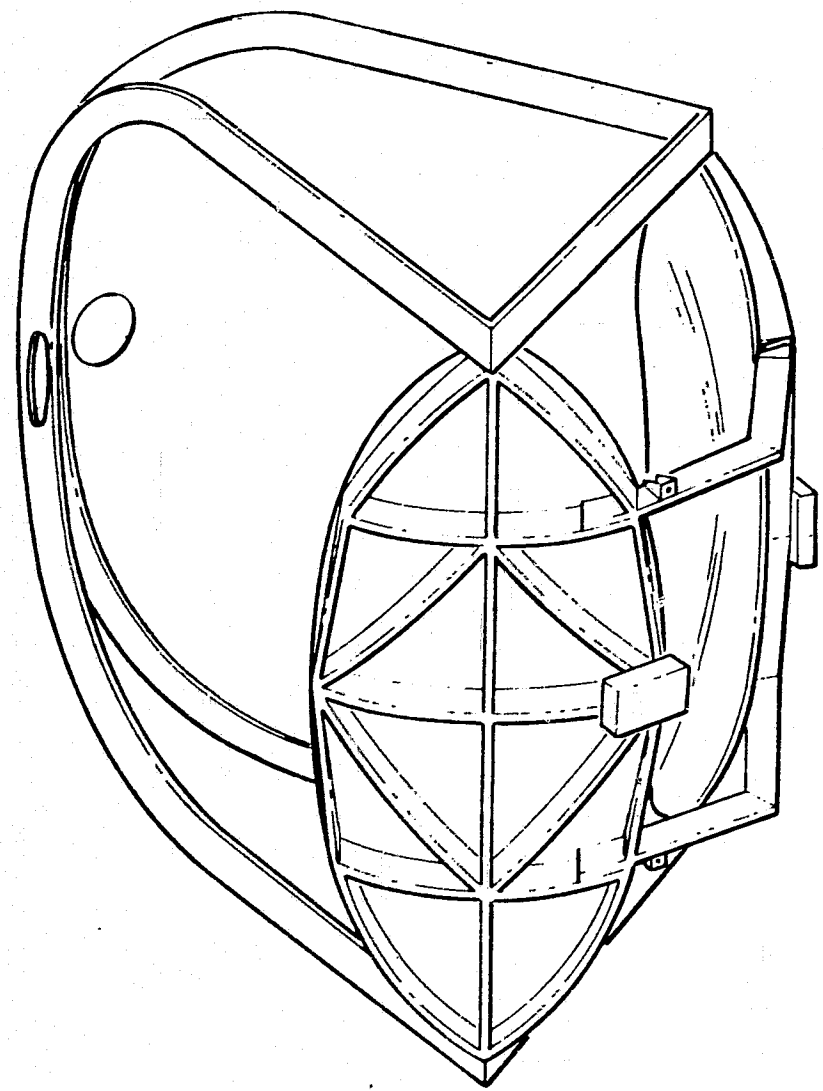

FIGURE 4 ANTENNA CONCEPT A - MLSR

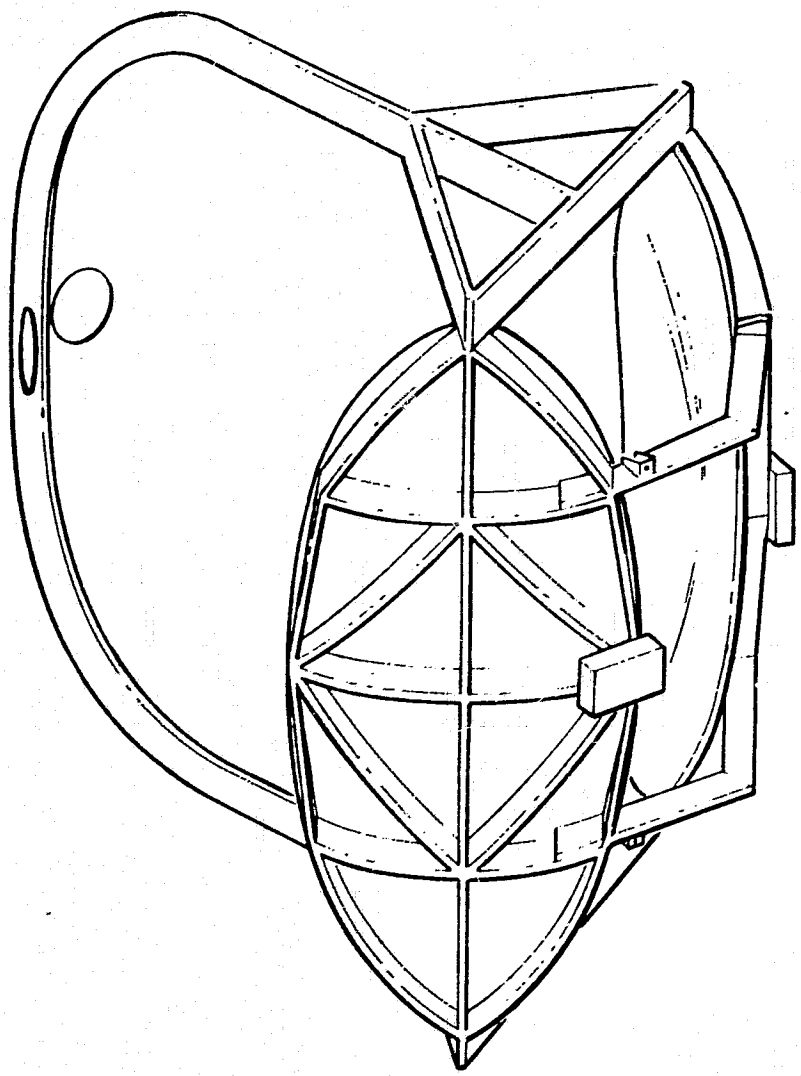

FIGURE 5 ANTENNA CONCEPT B - MLSR

TABLE 1 ASSEMBLY JOINT DETAILS

JOINT	COMMENT
RIB INTERSECTIONS	BONDED, DOUBLERS IF REQUIRED.
REFLECTOR/RIB	ADJUSTMENT SCREWS, INSERTS, ANGLES BONDED AFTER ADJUSTMENT.
INTERMEDIATE CROSS TIES	CONTINUATION OF HORIZONTAL RIBS. SHIMMING REQUIREMENT AT CENTER OF ASSEMBLY. BONDED SPLICE PLATES FOR FINAL CONNECTIONS.
UPPER AND LOWER CROSS TIES AND SECONDARY SUPPORT BEAMS	SHIMMED AND BONDED.
SECONDARY REFLECTOR	ADJUSTMENT CAPABILITY, BOLTED.
INSULATION	TAPED AND/OR NYLON CLIPS.
RECEIVER	BOLTED WITH SHIMS OR ADJUSTMENT CAPABILITY.
ANTENNA-SPACECRAFT	SHIMS/FLEXURES, BOLTED.

3.4 Antenna-Spacecraft Interface

The MLSR antenna assembly will be attached to the spacecraft at an interface that is not yet defined by the spacecraft; hence only very general concepts have been formulated. The requirements from the antenna side of the interface are: 1) Attachments that minimize distortions in the antenna, 2) provide adequate strength and stiffness and 3) minimize thermal conduction across the interface. If the antenna is required to scan about one axis, then the interface may also require rotation and/or articulating joints.

Two possible arrangements for interface joints are illustrated in Figure 6. The first is a four-point support using flexutre-type attachments at the points where the inner edges of the primary reflectors attach to the intermediate cross-ties. The flexures are canted at approximately 45-degree angles to the cross-ties to provide equal strength and stiffness in the plane of the attachments. The flexures would be sized to minimize antenna distortions once the spacecraft structure stiffness and distortions are specified. The four-point support is symmetrical and reduces the loading into the cross-tie members; however, it is redundant type support and represents a more complicated interface for the spacecraft. A three-point support, as shown in Figure 6, would eliminate the redundancy characteristics, but would require heavier flexures to carry out the antenna load at three points, rather than four. The cross-tie loading would also be greater in this arrangement; however, it would be more suited to gimbals and articulating joints if a scanning requirement results in rotation joints at the interface. A third possible interface arrangement which is not shown would have the interface joints at two locations on each central longitudinal rib. This would still be a redundant arrangement for the two reflector MLSR configuration; however, if a single reflector is to be used in a Shuttle experiment, it would provide a more suitable support arrangement. A non-redundant support arrangement with two of the three attachment points on the ribs and the third point on the cross-tie is also feasible.

FIGURE 6 ANTENNA INTERFACE ARRANGEMENTS

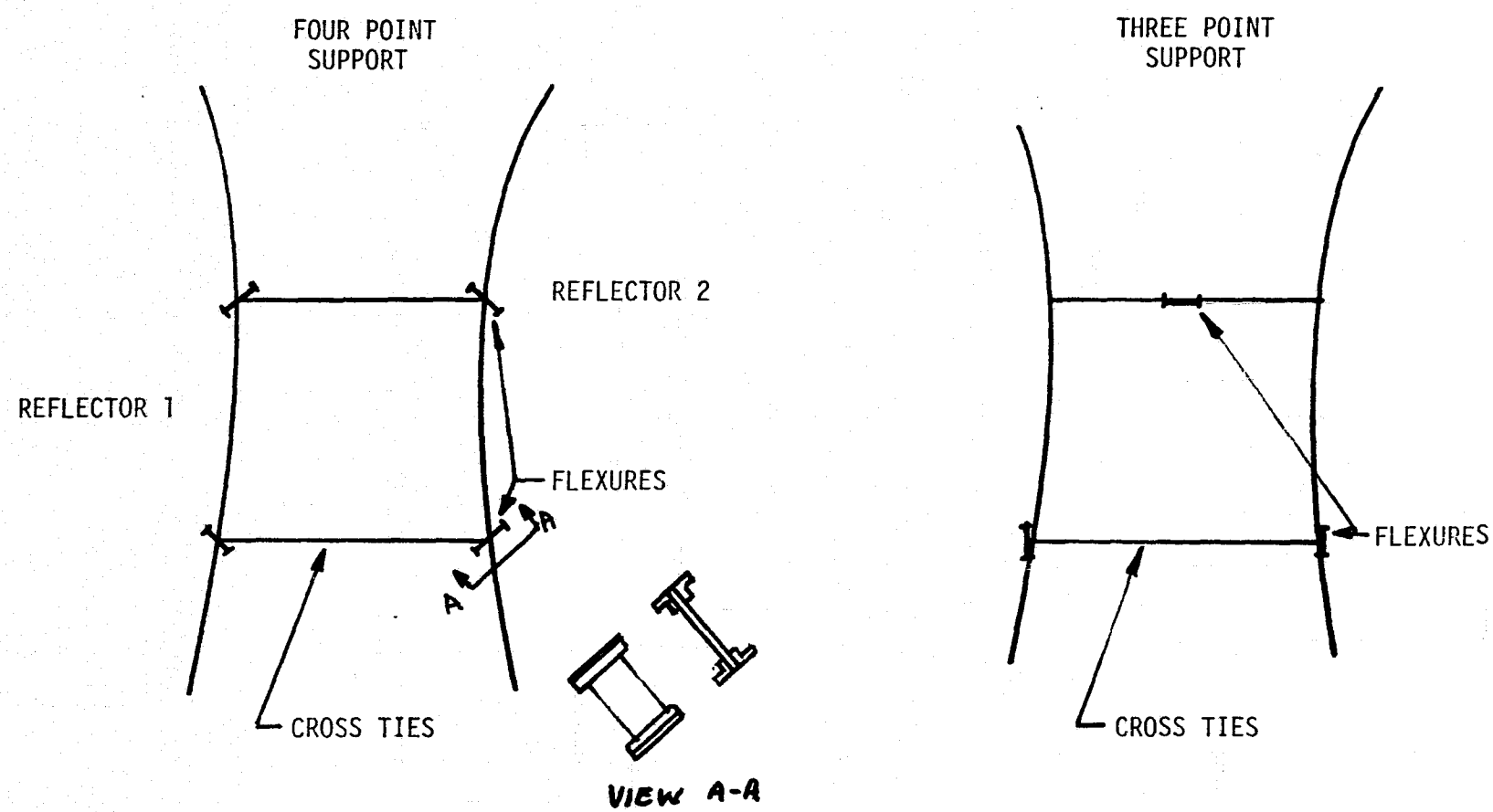

3.5 Thermal Control System

The thermal control concept for MLSR is a passive system similar to that used on Intelsat V antennas. It consists of multi-layer insulation blankets and white paint. The multi-layer blankets are made up of four layers of aluminized mylar and one layer of aluminized Kapton. It would be attached to the aft surfaces of the primary and secondary reflectors, and possibly to the secondary reflector support beams. Attachment is by low outgassing tape or nylon clips. The white paint would either be PV100 or S13GLO and would be applied to reflector forward surfaces and possibly to the secondary reflector support beams, depending on the results of detailed heat transfer analyses for MLSR orbital conditions.

4.0 THERMAL CONDITIONS

The antenna temperature conditions are a complex interaction of orbital parameters, spacecraft attitudes, and spacecraft and antenna heat transfer characteristics. Since the scope of the current study did not permit a detailed thermal analysis of the MLSR configuration, a set of temperature conditions was assumed based on data from similar antenna analyses. The configuration selected was the 61-inch diameter Intelsat V antenna, which has a thermal control system close to that selected for MLSR, although the orbital conditions and construction details are somewhat different. The Intelsat V temperature data, however, when applied to MLSR, are considered to be conservative based on the following reasons:

- MLSR spacecraft will have a low-to-medium altitude orbit versus a synchronous orbit for Intelsat V; hence the lower bound cold temperatures should be significantly higher on MLSR.

- The aluminum core construction for MLSR reflector versus Kevlar core for Intelsat V would reduce significantly temperature gradients through the sandwich.

- The MLSR antenna system oscillates slightly versus a fixed attitude for the Intelsat V, which should also help reduce temperature extremes and gradients.

The Intelsat V antenna was assessed for seven different thermal conditions, as illustrated in Figure 7. These included direct sunlight, fully shaded, partially shaded, spacecraft reflected heating, edge illumination and transient eclipse conditions. The transient heating on emerging from an eclipse produces a large temperature gradient from the reflector forward surface to the ribs, which could result in significant focal length changes and transient pointing errors. This condition, however, is a short-term phenomenon, as illustrated in Figure 8. The MLSR gradients should be less because of the lower earth orbit; however, the number of transients will increase as the orbital period decreases.

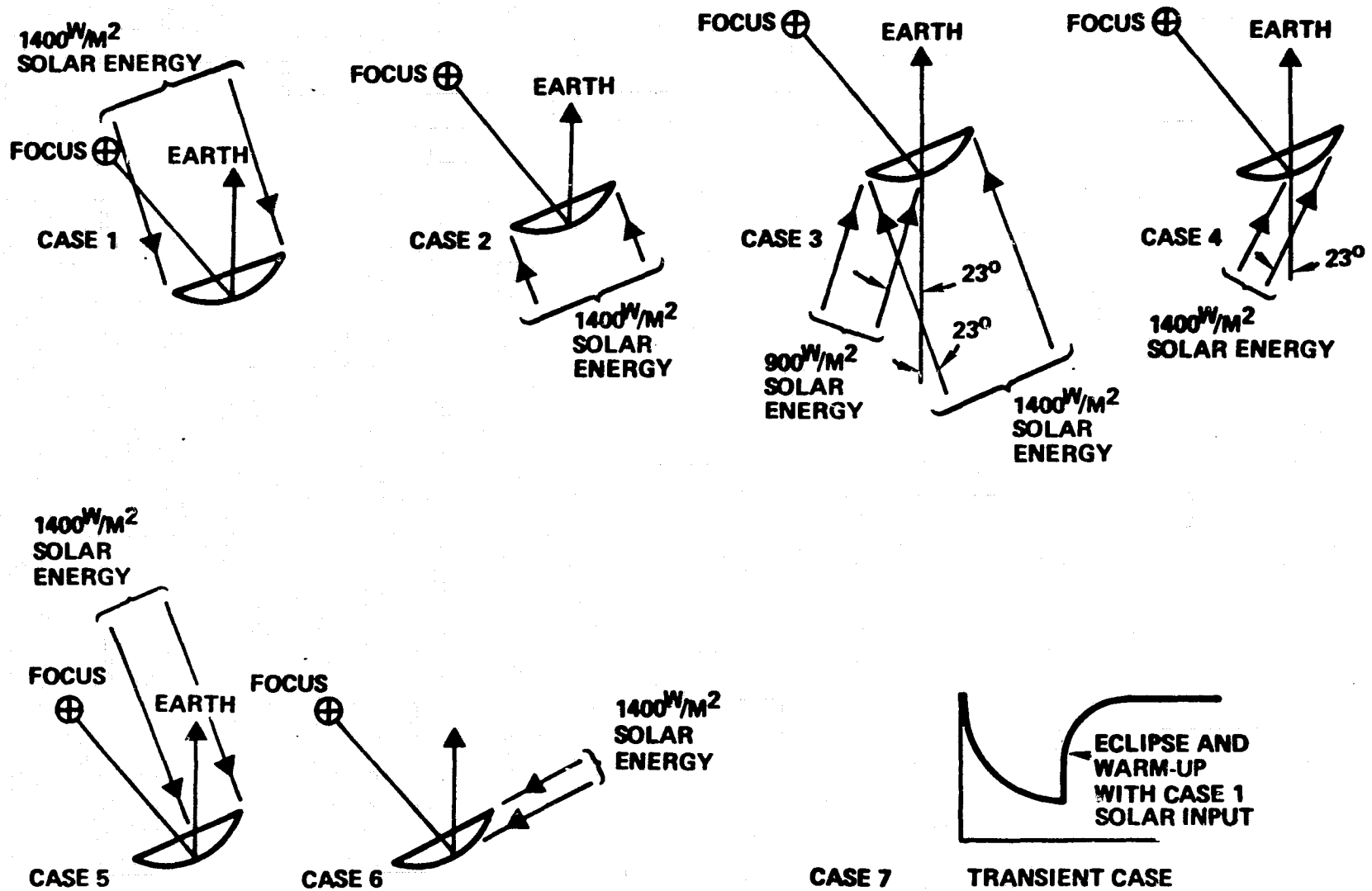

FIGURE 7 INTELSAT V THERMAL ANALYSIS HEATING CASES

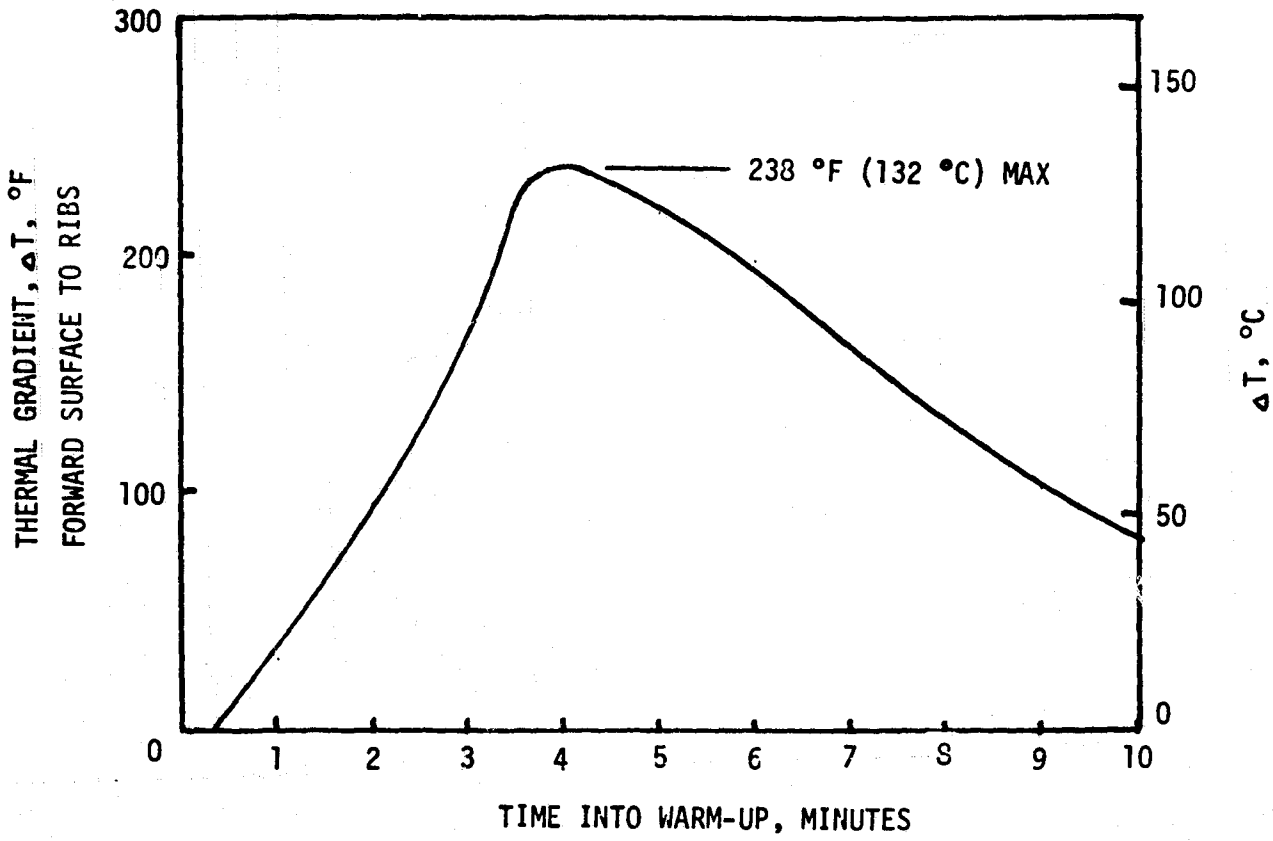

4 GHZ REFLECTOR

HEATING CASE 7: ECLIPSE AND WARM-UP WITH CASE 1 SOLAR INPUT

FIGURE 8 TRANSVERSE THERMAL GRADIENT VERSUS TIME

The conditions selected for MLSR distortion analysis and the structural temperatures for those conditions are summarized in Table 2. The basis for selection of the first case is that it represents the most severe temperature change from the assembly condition; hence contour, RMS and pointing errors should be greater than for a full sun condition. The next two cases represent severe gradients in a reflector, with Case 2 producing a gradient from top to bottom and Case 3 a gradient from front to back, although the latter is a short-term transient, as indicated previously. The fourth case is derived from an edge-illuminated condition of the Intelsat V reflector (Figure 7, Case 6); however, the temperature distributions have been modified to represent the MLSR configuration. This results in a condition with one reflector edge to the sun; the other reflector face is full sun and, because of the radiation heating, the first reflector face is significantly higher temperatures than a shaded condition.

All temperature distributions were taken directly from the Intelsat V analyses and modified only for Case 4; hence the assumed temperatures are subjectively derived, but based on the reasons presented earlier are considered to be conservative.

Until the spacecraft configuration is defined and the orbital heating data for the MLSR configuration is available, the data presented here is considered adequate for evaluating the conceptual design thermal distortion performance.

TABLE 2 ASSUMED TEMPERATURE CONDITIONS

CONDITION	TEMPERATURES - °F		
	REFLECTOR FACE	REFLECTOR AFT SIDE	RIB STRUCTURE
1. REFLECTOR FACE, FULLY SHADED, AFT-INSULATED SIDE FULLY ILLUMINATED	-152	-146	-135
2. HALF-SHADED FACE			
UPPER HALF	175	169	167
LOWER HALF	-152	-146	-135
3. TRANSIENT OF EMERGING FROM ECLIPSE TO INDUCE MAXIMUM FRONT-TO-BACK GRADIENT	175	130	- 63
4. ONE REFLECTOR EDGE - ILLUMINATED SECOND REFLECTOR FACE - FULL SUN			
REFLECTOR 1	- 52	- 46	- 35
REFLECTOR 2	175	169	167

5.0 TRADE STUDY RESULTS

The conceptual design trade studies focused on the antenna performance in the thermal environment. The initial step in the study required the development of structural models that met the geometrical requirements. Material properties were then selected, based on prior experience, that would minimize the thermal distortions within a reasonable weight allowance. Temperature data were applied to the model and the subsequent distortions were evaluated to determine pointing accuracies, focal length changes and surface RMS contour deviations. To be certain that the configurations satisfied a minimum strength requirement, the trade study was concluded with a loads and stress analysis.

5.1 Structural Model

The structural models of the MLSR were formulated to evaluate thermal distortions and internal stresses from launch loads environments. These detailed analyses were performed using TRW's Structural Analysis Program (TRWSAP) and a Best Fit Parabola (BFP) program. TRWSAP is a CDC 6000 Series computer program capable of analyzing very large and complex structures. The solution is based on small deflection theory using the direct stiffness finite element method of structural analysis. The program has options for three types of analysis: a structural modal analysis program (SMAP) option, a static structural analysis program (SSAP) option and a loads transformation matrix program (LTMP) option. The computer program permits sandwich construction to be accurately modeled by requiring separate material and thickness data for the facesheets and core. The rib members are modeled as two beams by representing the sandwich elements with one set of section properties and materials, and the channel closure elements with a second set of properties and materials. Figures 9 and 10 present the mesh elements for the primary reflector rib members and shell elements, respectively. An identical representation was achieved for the second reflector in each assembly by transforming the data to the coordinate locations of the adjacent reflector.

In formulating the system model, the coordinate system presented in Figure 11 was used. The origin is at the vertex of Reflector 1 and the focal point is 47.244 inches along the +Z axis. The solid lines are model

MDVL 1.1
01/30/79.
08.41.03.

MLSR ANTENNA SYSTEM CASE 19: THERMAL DEFL ANALYSIS 12/14/78 F=MLSR19
REFLECTOR RIB MEMBERS Z-VIEW

I = ML19FEG
M = MLSR19

FIGURE 9

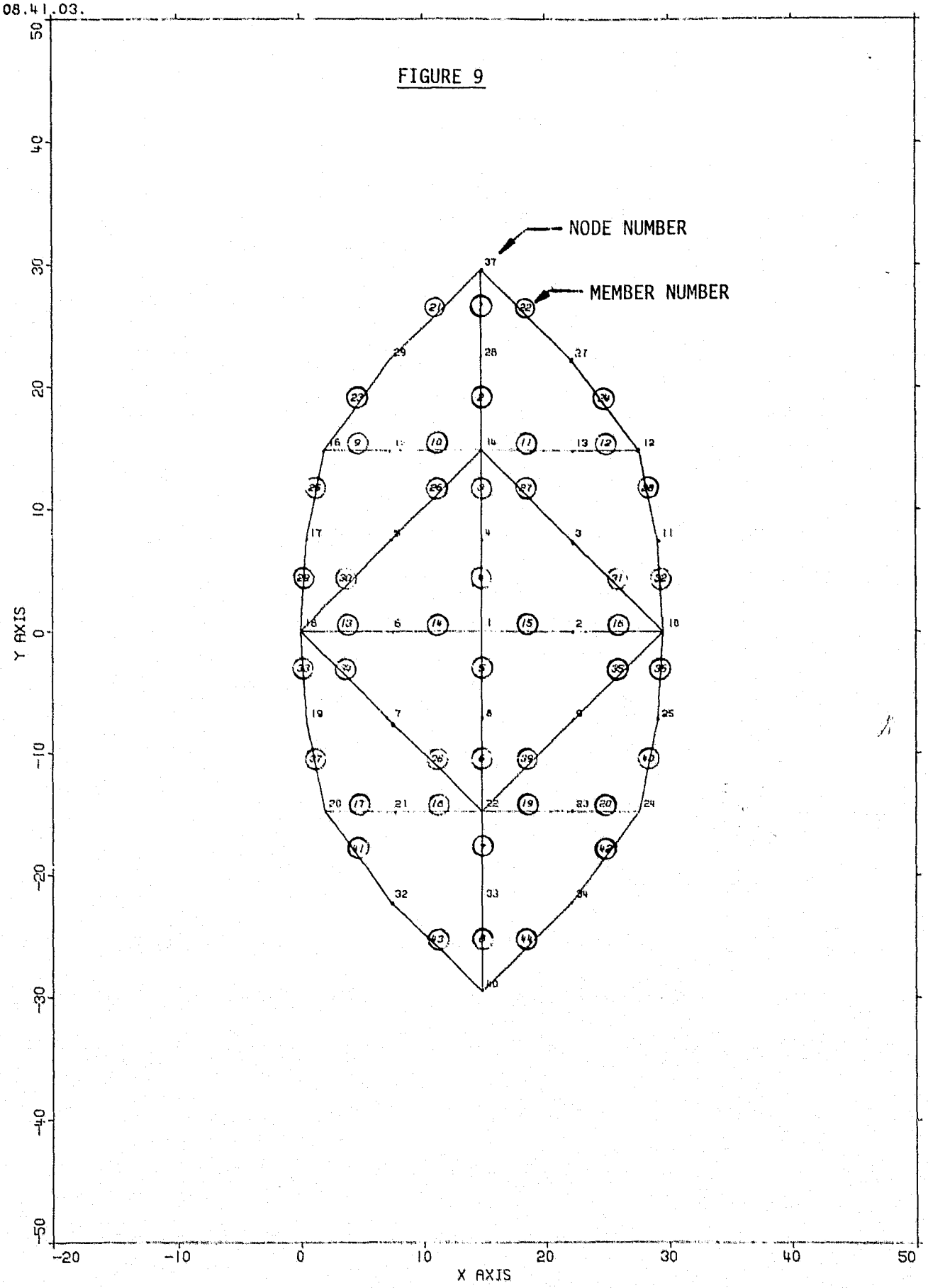

ODXG 6.6
10/31/78.
15.29.25.

MLSR ANTENNA, CASE 1: THERMAL DEFLECTION ANALYSIS 10/31/78
ALL PLS Z-VIEW

I = MLSRFEG
M = MLSR1

FIGURE 10

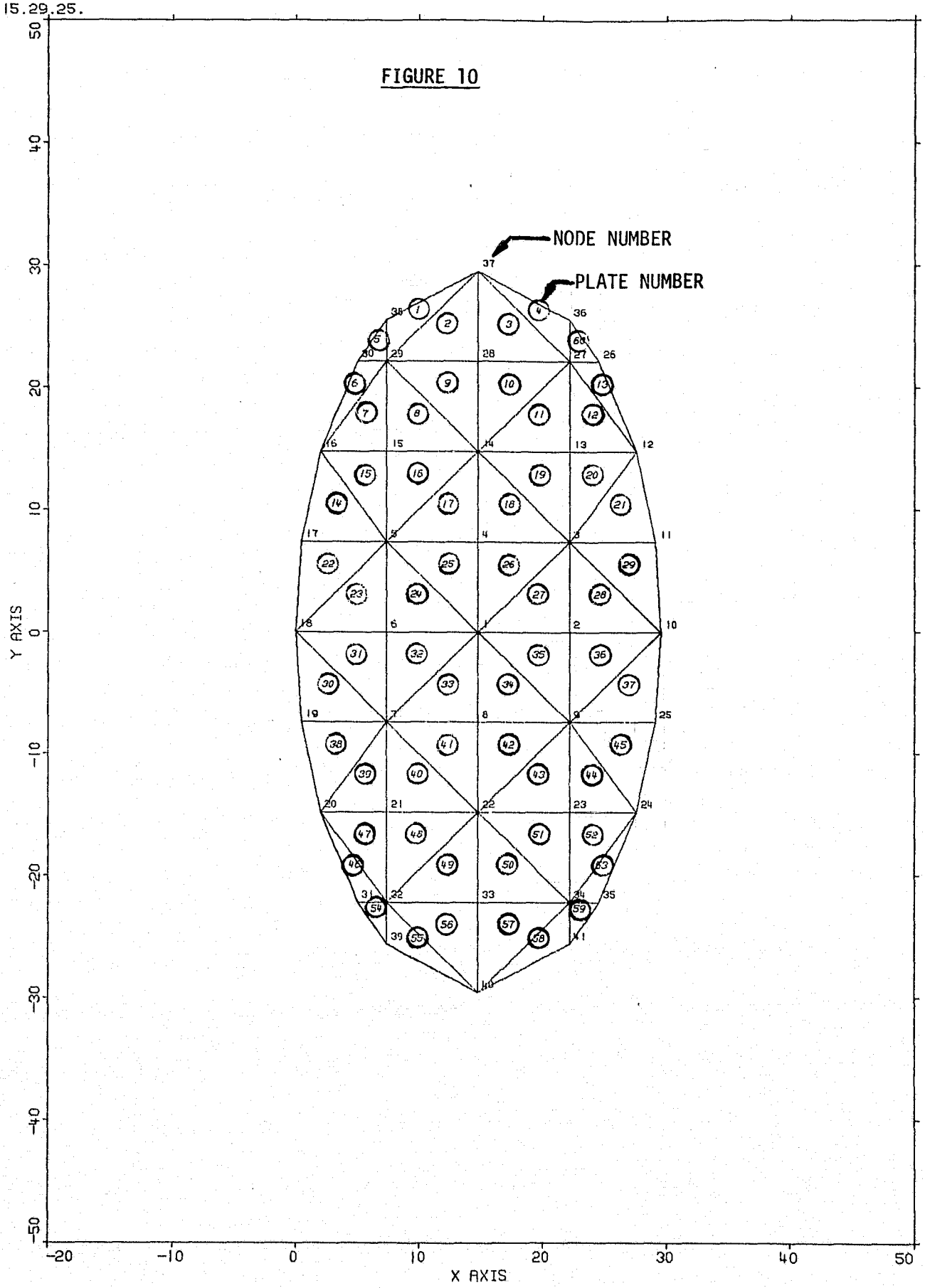

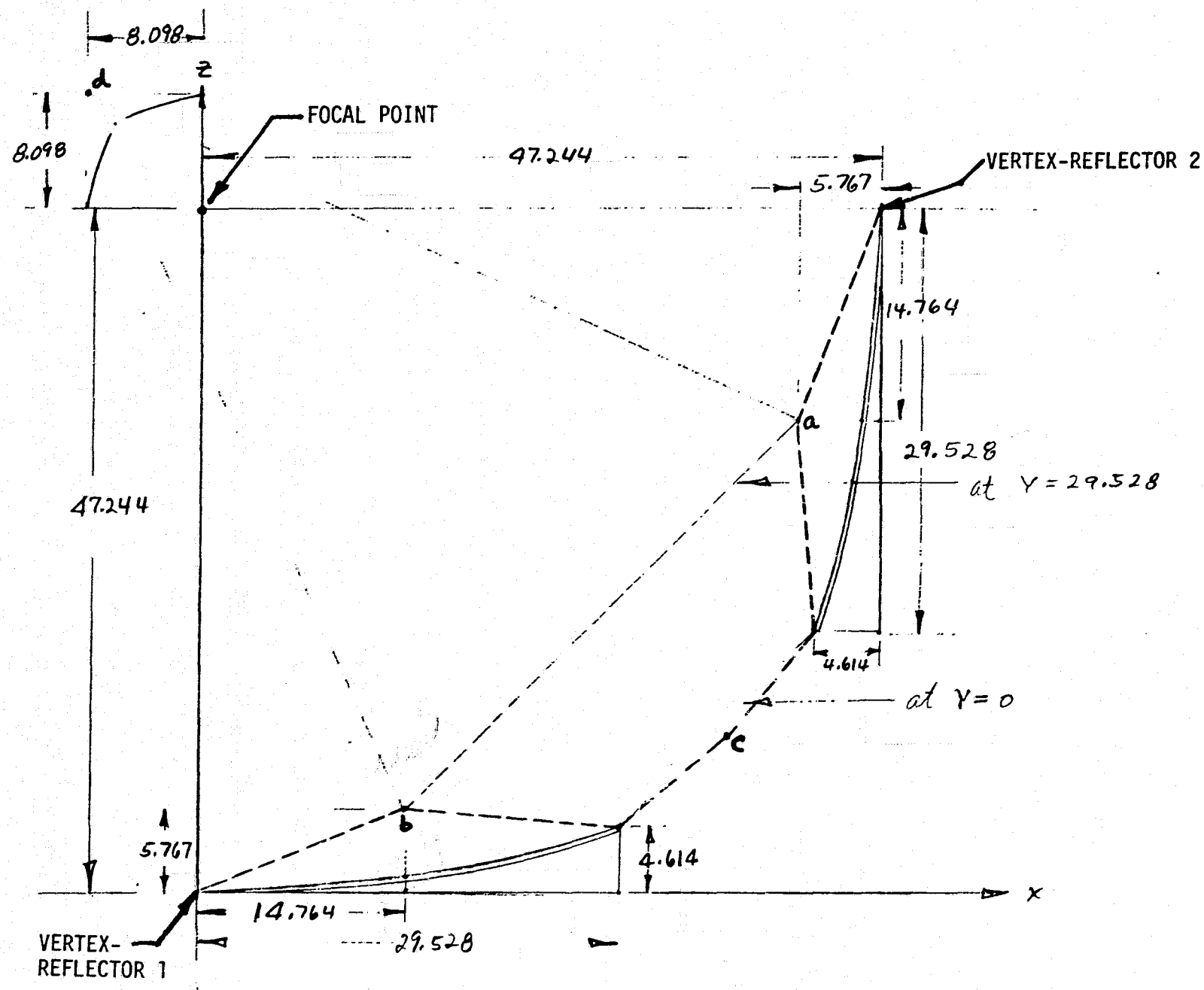

FIGURE 11 COORDINATE SYSTEM AND MID-PLANE DIMENSIONS

geometry in the X-Z plane and the dashed lines represent key dimensional positions of the model not in the X-Z coordinate plane. All dimensions are in inches. Figures 12 and 13 present the X and Y views of the Concept A structural model, and Figures 14 and 15 present similar views for the Concept B structural model.

5.2 Material Properties

The materials selected for MLSR use are based on trade studies of composite materials from prior antenna applications. Also considered were the special requirements of the MLSR application. Primary among these is the need for small distortions to meet the RMS accuracy, but also included is the concern for a smooth surface finish. The effect of surface finish on antenna performance at high frequencies is relatively unknown and requires further study and test. It is anticipated, however, that as smooth a surface as possible will be required without resorting to special polishing procedures; hence, a fine weave cloth was selected for the reflector composite material. Table 3 summarizes physical and thermal properties of sandwich construction that have been manufactured and tested by TRW on other programs. Table 4 presents strength and stiffness data for some of the same construction types as presented in Table 3.

The specific materials selected for the MLSR configuration are summarized in Table 5. The primary reflector would be made of 3 plies of unidirectional woven graphite cloth with a fine weave of 50 ends per inch over a 1/4-inch thick aluminum honeycomb core. A possible alternative, if reduced thermal deflections are necessary, would be a 6-ply GY70 (0,$\pm$60,$\pm$60,0) on the 1/4-inch aluminum honeycomb. The cross-ties and secondary reflector support structure would be the same as the primary reflector. The rib construction would be 6 plies of GY70 bonded to a 1/2-inch thick, 4-inch deep aluminum honeycomb to provide a rib subassembly with adequate stiffness and a thermal expansion similar to the reflector shell. Channel edge closures and angle sections made of Kevlar 20/HM1000 would be included for additional stiffness and to hold the rib subassembly to the reflector. Mechanical properties of the materials used in the thermal distortion analyses are presented in Table 6.

The basic materials and processes selected for MLSR construction have been developed and flight-proven on other systems. Tests have been conducted

MDNL 2.2
11/14/78.
08.58.32.

MLSR ANTENNA SYSTEM CASE 7: THERMAL DEFL ANALYSIS 11/14/78 F=MLSR7
ALL MEM AND PLS X-VIEW

I = MLSRFEG
M = MLSR7

FIGURE 12

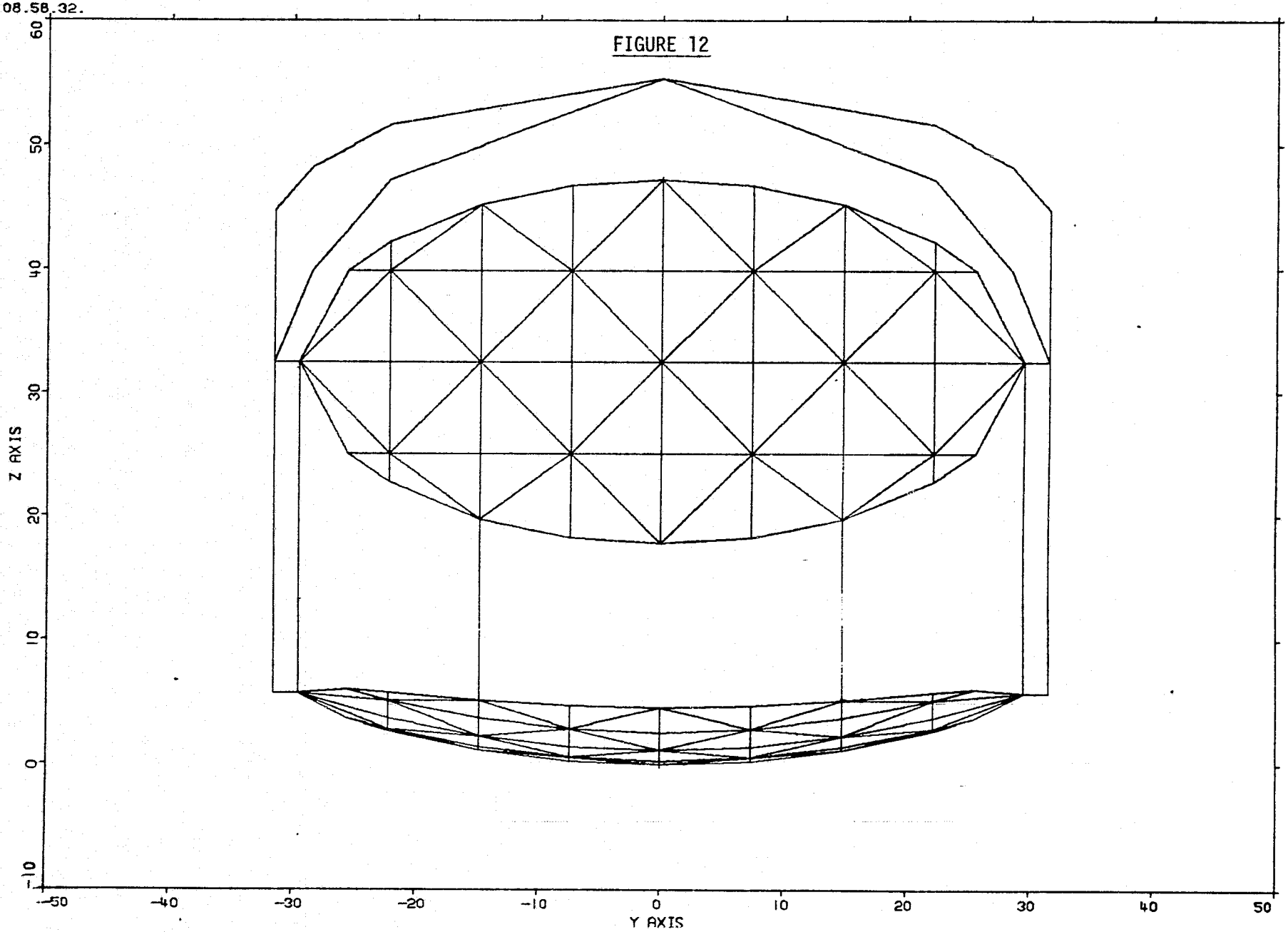

NJQK 2.2
01/30/79.
13.08.31.

MLSR ANTENNA SYSTEM CASE 20: THERMAL DEFL ANALYSIS 1/17/79 F=MLSR20
MEMBERS AND PLATES Y-VIEW

I = ML19FEG
M = MLSR20

FIGURE 13

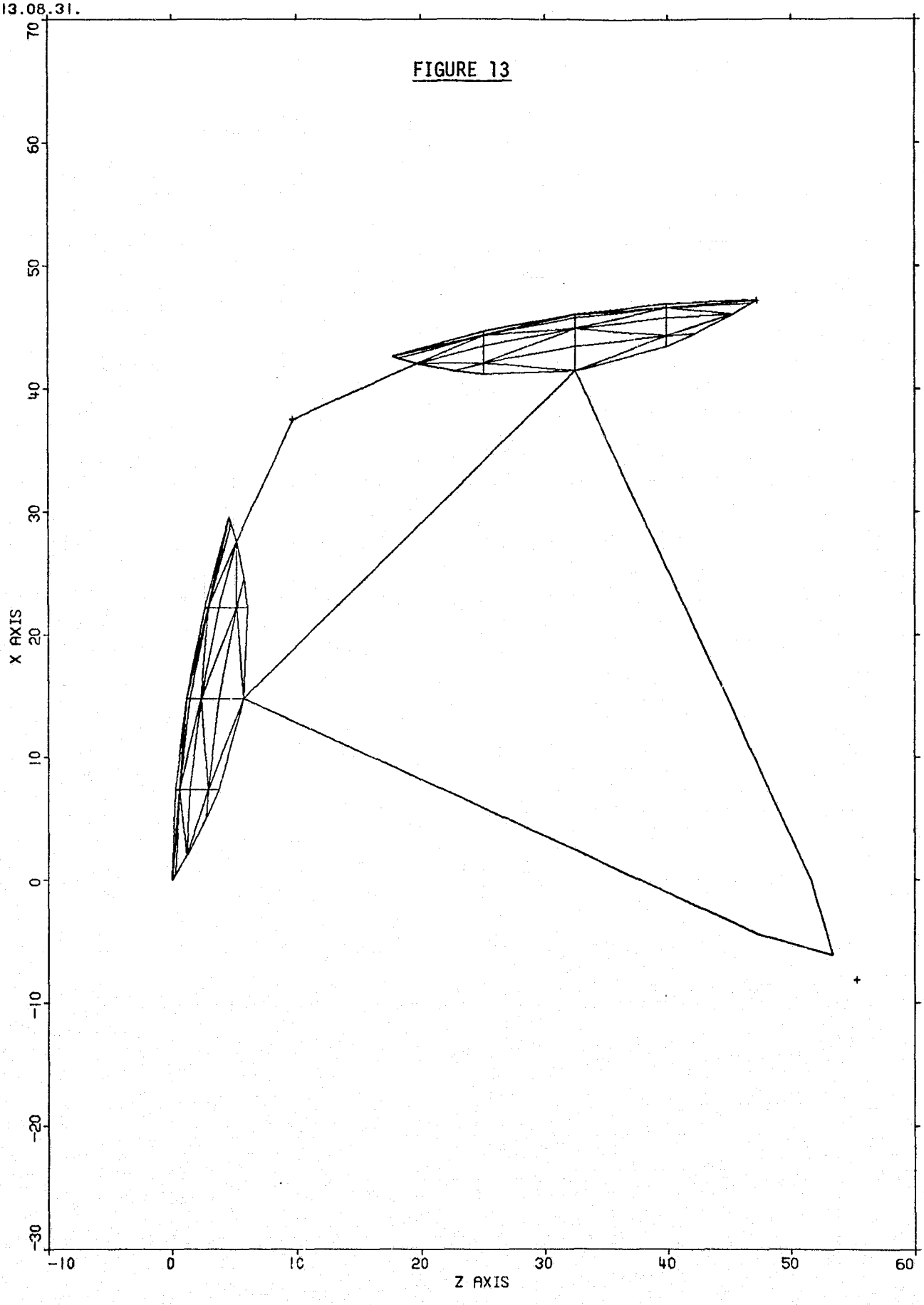

MDVL 4.4
01/30/79.
08.41.03.

MLSR ANTENNA SYSTEM CASE 19: THERMAL DEFL ANALYSIS 12/14/78 F=MLSR19
MEMBERS AND PLATES Z-VIEW

I = ML19FEG
M = MLSR19

FIGURE 14

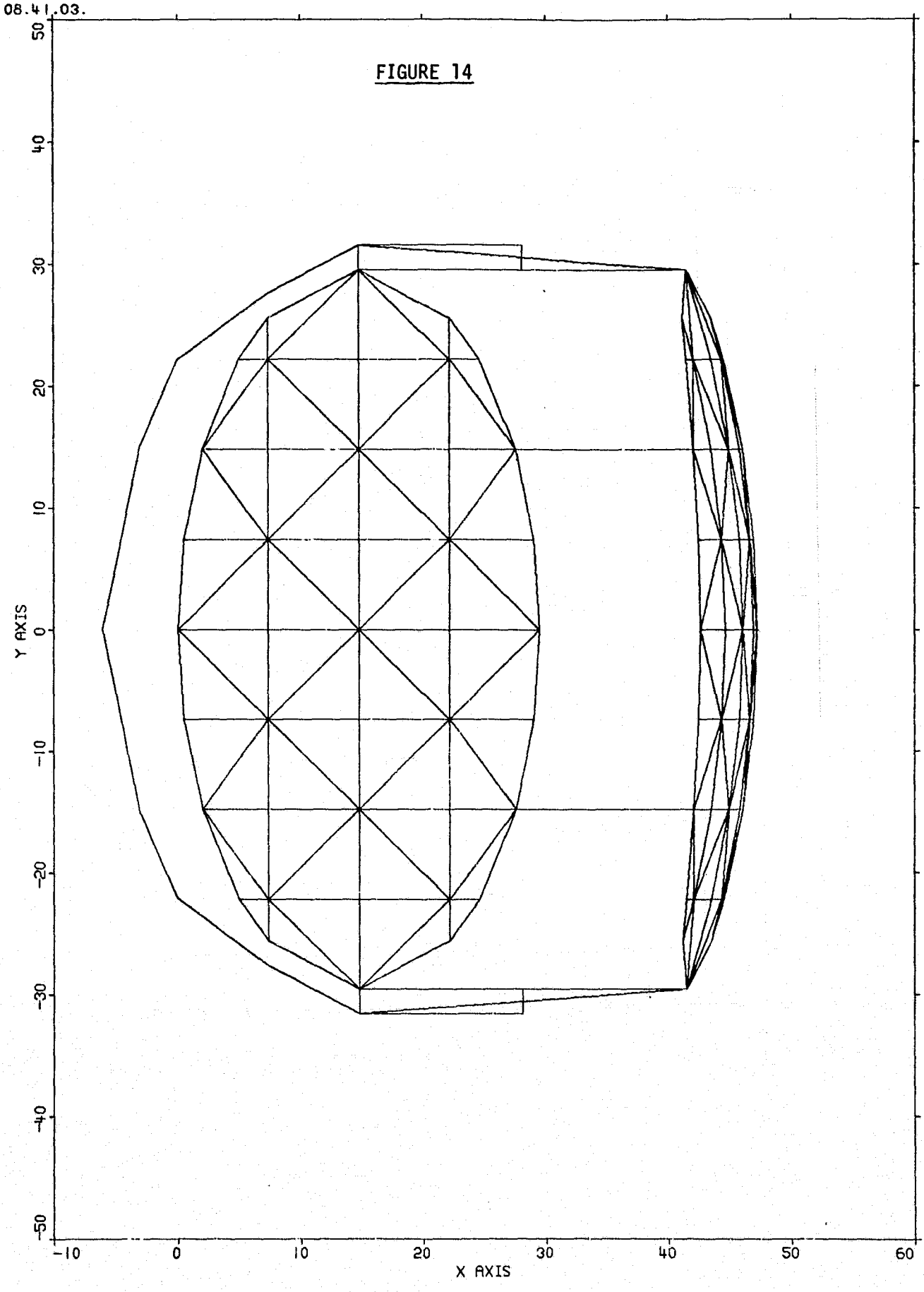

MDVL 2.2
01/30/79.
08.41.03.

MLSR ANTENNA SYSTEM CASE 19: THERMAL DEFL ANALYSIS 12/14/78 F=MLSR19
MEMBERS AND PLATES Y-VIEW

I = ML19FEG
M = MLSR19

FIGURE 15

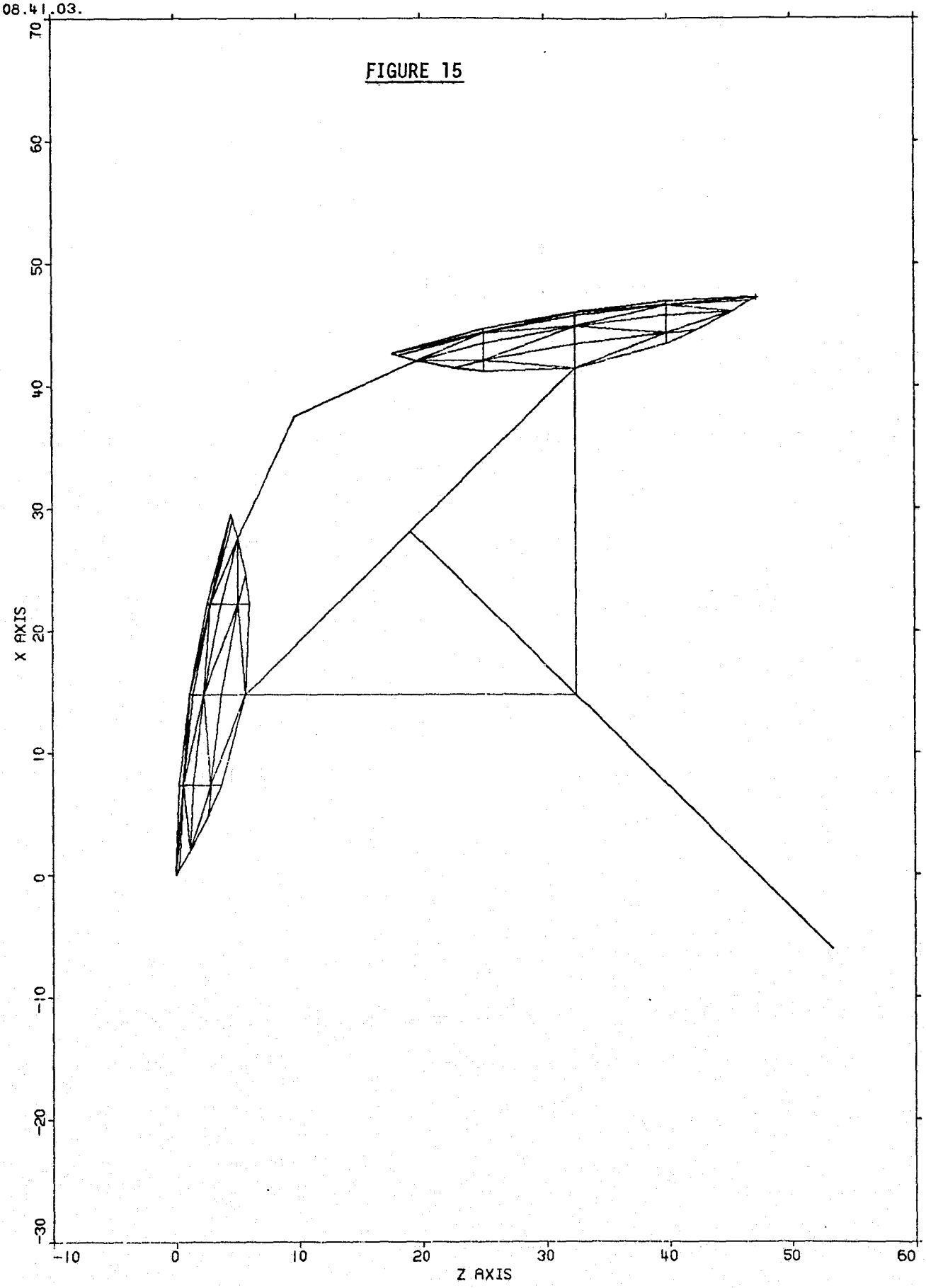

TABLE 3 TYPICAL PHYSICAL AND THERMAL PROPERTIES OF VARIOUS SANDWICH STRUCTURES

Fiber	Resin Type (Content percent)	Face Sheet			Core				Cure* Process	Sandwich Properties		
		Ply Thick (in.)	No. of Plies	Orientation	Cell Size (in.)	Density (lb/ft^3)	Thick (in.)	Mat'l		Weight (lb/ft^2) of Surface	α Test Dir (Core Ribbon Direction)	α in./in./°F x 10^{-6}
GY70	934 (35)	0.0052	6	0,±60,90,∓30	1/8	3.1	1/4	Al	1	0.705	0 90	-0.06 -0.17
		0.0055	6	0,±60,90,∓30	1/8	3.1	1/4	Al	2	0.715	0 90	0.05 -0.03
		0.0054	3	0,±60	1/8	3.1	1/4	Al	1	0.445	0 90	0.66 -0.06
		0.0054	4	0,90,45,135	1/8	3.1	1/4	Al	2	0.525	0 90	0.21 0.09
		0.0054	4	0,90,90,0	1/8	3.1	1/4	Al	2	0.525	0 90	-0.13 -0.26
GY70 (37 ends/in.)	934 (35)	0.003	4	0,90,90,0	1/4	1.6	1/4	Al	1	0.271	0 90	0.21 0.16
		0.003	3	0,±60	1/4	1.6	1/4	Al	1	0.21	0 90	0.28 0.30
GY70 (56 ends/in.)	934 (35)	0.003	3	0,±60	1/4	1.6	1/4	Al	1	0.23	0 90	0.29 0.20
GY70 40x40 Twill	8517 (35)	0.007	2	1 ply(0,90) 1 ply(45,135)	1/4	2.1	1/4	Kev	2	0.250	0 90	0.09 0.10
GY70 (50 ends/in.)	5208 (42)	0.0031	4	0,90,90,0	1/4	2.1	1/4	Kev	2	0.31	0 90	0.27 0.23
1 ply GY70 40x40 Twill 1 plyKevlar 120	8517 (35)	0.011 Total	2	0,90 0,90	1/4	2.1	1/4	Kev	2	0.195	0 90	0.06 0.09

*1 - Autoclaved faces, secondary bonded to core.
2 - Single stage layup and low pressure autoclave cure.

TABLE 4 SANDWICH MECHANICAL PROPERTIES

Face Sheets				Core			Sandwich Properties			
Fiber Type	Weave	Resin Type (Content percent)	Orientation	Mat'l	Type-Density (lb/ft^3)	Thickness (in.)	Test Direction	Compressive Strength (psi)	Compressive Modulus (msi)	Flatwise Tensile (psi)
GY70	50 EPI	5208 (30)	0,90,90,0 (Autoclaved and bonded)	Al	1/4-1.6	1/4	0 90	16.5 12.7	22.0 22.6	249
GY70	50 EPI	5208 (35)	0,90,90,0 (Vacuum bag single stage)	Kevlar	1/4-2.1	1/4	0 90	14.5 13.1	12.6 12.3	220
GY70	50 EPI	5208 (30)	0,±60 (Autoclaved and bonded)	Al	1/4-1/6	1/4	0 90	21.1 20.2	11.2 10.9	
GY70	40x40 Twill	5208	1 ply (0,90) 2nd ply (45, 135) (Single stage vacuum bag)	Kevlar	1/4-2.1	1/4	0 90	13.5 12.5	12.0 12.0	218
GY70 (1 ply)	40x40 Twill	8517	0,90	Kevlar	1/4-2.1	1/4	0	12.5	8.0	160
Kevlar 120 (1 ply)	34x34		0,90 (Single stage vacuum bag)				90	12.0	7.5	

TABLE 5 MATERIAL SELECTIONS

- o PRIMARY REFLECTOR
  - o FACE SHEETS - GY70 (UNI-DIRECTIONAL WOVEN GRAPHITE CLOTH)
    3 PLIES (0,±60), 50 EPI
    934 EPOXY
  - o CORE - ALUMINUM HONEYCOMB, 1/4-INCH THICK,
    1.6 LB/FT^3, 1/4-INCH CELL SIZE
- o RIB STRUCTURE
  - o FACE SHEETS - GY70, 6 PLIES (0,±60,±60,0), 50 EPI
    934 EPOXY
  - o CORE - ALUMINUM HONEYCOMB, 1/2-INCH THICK,
    1.6 LB/FT^3, 1/4-INCH CELL SIZE
  - o EDGE CLOSURE AND ANGLES - KEVLAR 120/HM1000
    2 PLY (0,90)
- o CROSS TIES AND SECONDARY REFLECTOR SUPPORT
  - o SAME SANDWICH CONSTRUCTION AS PRIMARY REFLECTOR
- o SECONDARY REFLECTOR
  - o MACHINED TITANIUM FITTING

TABLE 6 MATERIAL MECHANICAL PROPERTIES

ITEM	E PSI	μ	G PSI	α_t IN/IN-°F
SHELL SANDWICH	15.2×10^6	0.3	5.8×10^6	$.25 \times 10^{-6}$
RIB SANDWICH	13.4×10^6	0.3	5.2×10^6	$.21 \times 10^{-6}$
ANGLES AND RIB CAPS	6.95×10^6	0.3	2.7×10^6	$.17 \times 10^{-6}$
CROSS TIES AND SECONDARY REFLECTOR SUPPORT	15.2×10^6	0.3	5.8×10^6	$.25 \times 10^{-6}$

to obtain the strength, stiffness and CTE values of the various composite sandwich constructions. Design values are based on statistical testing to arrive at a conservative 95 percent level from 90 percent of the test population. Specifications exist for all materials and processes that were selected for the MLSR design.

5.3 Thermal Distortion Results

The output of the TRWSAP model analyses are distorted coordinates of the reflector for each temperature condition assessed. The distorted coordinates are used in a best fit parabola program to compute several mechanical distortion parameters, including RMS surface deviation, mechanical boresight angle shift, focal length changes and vertex shift. These parameters are computed by determining the three-dimensional best fit paraboloid that passes through the nodes of the distorted finite element model of the reflector surface. Once the best fit paraboloid is defined, the distortion parameters are computed by direct comparison to the original undistorted reflector.

Figure 16 is a schematic representation of how the electrical boresight angle change (ψ_E) and the focal point defocus (ΔFP) are characterized based on contributions from the thermoelastic distortion analysis. The best fit paraboloid (BFP) analysis computes values for the change in focal point position (ΔX_{FP}, ΔY_{FP}, ΔZ_{FP}) and the tilt in mechanical boresight ($\Delta\theta$) relative to the undeformed reflector geometry. For symmetric thermal cases, ΔZ_{FP} is zero and distortions are limited to the XY plane. The assumption is made that the focal point is stationary so that all displacements are computed relative to that point.

Results of these analyses for the two MLSR configurations for four temperature conditions are summarized in Table 7. The fourth thermal condition was not assessed on Concept B because of the relatively small distortions that were achieved on Concept A. Included in the table are the allowable pointing and RMS levels from Section 2, with the latter broken down into the allowances for manufacturing and in-orbit thermal distortions. It is apparent that the RMS requirement is achieved for both concepts for all temperature conditions analyzed. The pointing requirement is satisfied for temperature conditions 1 and 4, but is not achieved for

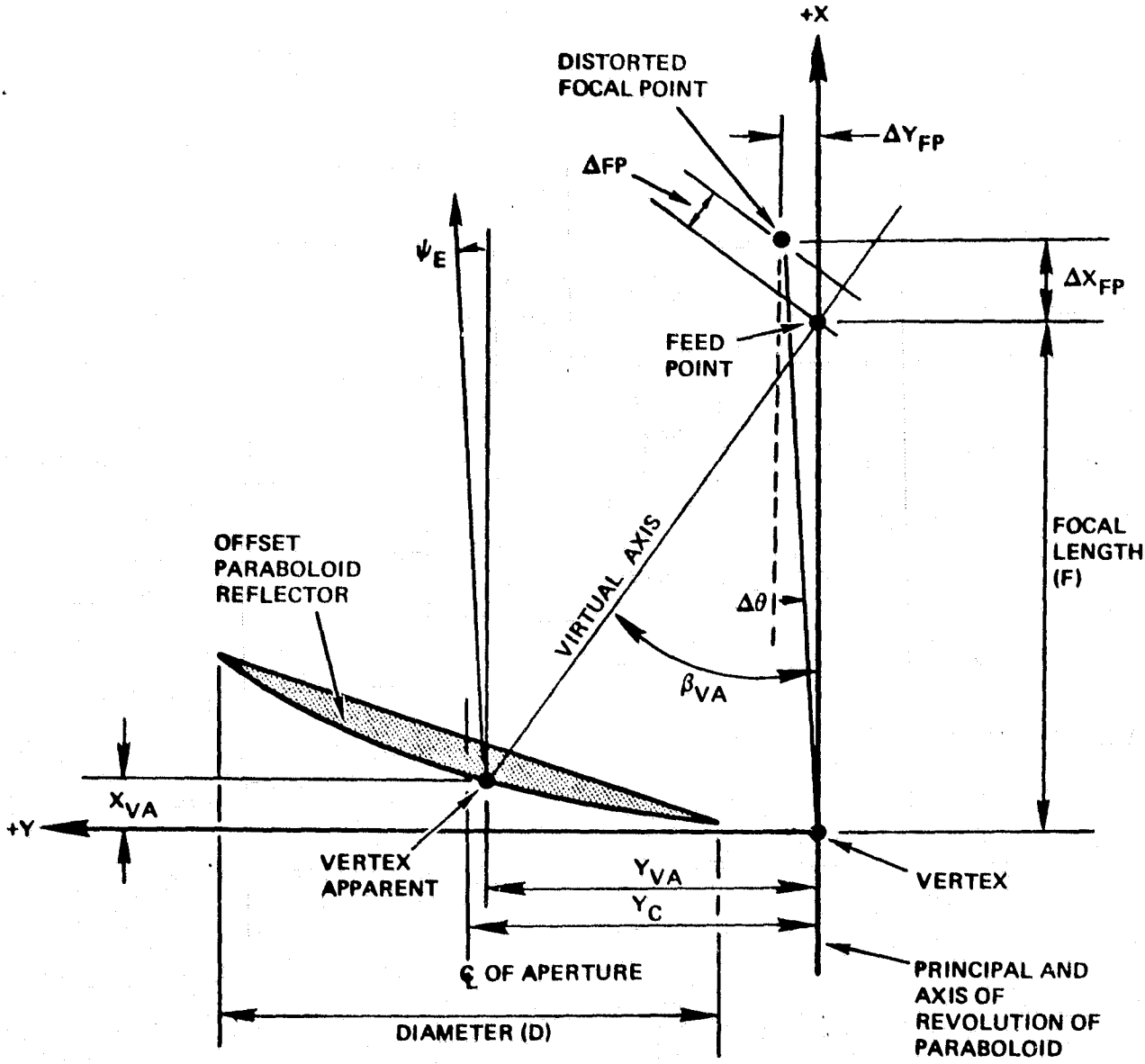

$$\psi_E = \left(\frac{0.90}{F + X_{VA}}\right)(\Delta X_{FP} \sin\beta_{VA} + \Delta Y_{FP} \cos\beta_{VA}) \frac{180}{\pi} + \Delta\theta$$

$$\Delta FP = \Delta X_{FP} \cos\beta_{VA} - \Delta Y_{FP} \sin\beta_{VA}$$

FIGURE 16 PARAMETERS FOR THERMAL DISTORTION ANALYSIS

TABLE 7 THERMAL DISTORTION ANALYSES RESULTS - MLSR

TEMPERATURE CONDITION	CONCEPT A TWIN BEAMS			CONCEPT B SINGLE BEAM		
	Ψ_E DEG.	ΔFL IN.	RMS IN.	Ψ_E DEG.	ΔFL IN.	RMS IN.
1. REFLECTOR FACE, FULLY SHADED	.0010	.0012	4.7×10^{-5}	.00088	.0008	4.8×10^{-5}
2. REFLECTOR FACE, HALF-SHADED	.0042	.00061	2.9×10^{-4}	.0096	.0005	2.9×10^{-4}
3. TRANSIENT FRONT-TO-AFT GRADIENT	.0439	-.0119	2.27×10^{-4}	.0503	-.0117	2.13×10^{-4}
4. REFLECTOR 1 EDGE - IN SUN REFLECTOR 2 FACE - FULL SUN	-.0008	.00057	3.6×10^{-4}			

ALLOWABLES: Ψ = .002°
RMS = 1.5×10^{-3} (TOTAL)

RMS DISTRIBUTION

THERMAL DISTORTIONS < 1×10^{-3}
MANUFACTURING < 1×10^{-3} (REQUIRED)
< 0.5×10^{-3} (GOAL)

conditions 2 and 3. In general, Concept A is better than Concept B on pointing and RMS levels. The results presented here are influenced by the antenna support condition and could possibly improve by proper adjustment or tuning of the antenna/spacecraft interface stiffness. A more precise heat transfer analysis, coupled with some modifications of materials or structure, should enable the design to meet the pointing requirement for most other temperature conditions. Selection of the 6-ply design for the reflector, for example, would result in a 50% reduction of the distortion errors and a further improvement is in order because of the conservative temperature assumptions. It does not appear likely, however, that material changes or structural configuration modifications could achieve the desired pointing accuracy for temperature condition 3. It should be recognized, however, that this is a short-term transient condition that may be acceptable from an overall mission viewpoint.

5.4 Structural Loads and Stiffness

The final trade study was intended to make a comparative assessment of the two design concepts for flight loads. However, results of the analyses showed such high margins of safety for one configuration that detailed assessment of the other was not made. Structural differences are only in the secondary reflector supports and this part of the design was assessed.

The design loads, strength criteria and stiffness evaluations are summarized in Table 8. The Shuttle launch environments in ICD2-19001 were reviewed prior to selection of a design load condition. In general, limit load factors are less than 4.5 g's along any axis for payloads mounted in the Shuttle cargo bay. Since the spacecraft and spacecraft/Shuttle support structure is not defined, dynamic amplifications on the transient loading events could not be determined. For conceptual design purposes, therefore, a limit load of 20 g's was selected. Acoustic levels of 145 db (OA) are liftoff overall levels for cargo bay mounted equipment. An ultimate design factor of safety of 1.5 was selected for MLSR structures, which also meets Shuttle minimum requirements.

Results of the detailed stress analysis show very high margins of safety in all structural elements, based on a 20 g static load condition and a four-point support of the antenna at the interface fitting shown in Figure 4. Total weight of the assembly was originally assumed to be approximately 34 pounds, including an allowance of 8 pounds for the receiver optics. A subsequent estimation of the receiver weight by JPL at about 35 pounds would result in an antenna assembly weight of about 64 pounds. A 6-ply reflector face would add 3.8 pounds to the assembly weight. A check of the interface fitting loads for this weight condition continues to show positive margins of safety. A check of the local structure where the receiver mounts to the antenna ribs was not attempted because details of the receiver footprint are not defined. Local structural changes may be required once the receiver configuration is defined. Details of the stress analysis are provided in Appendix A.

Modal data of the configuration were not computed; however, an approximate evaluation of the stiffness was made using static deflections. For a 1 g loading condition, the maximum deflections were used to determine approximate values of the fundamental frequencies. Results are presented in Table 8.

TABLE 8 DESIGN LOADS AND STIFFNESS

- o LOADS (REF. SHUTTLE ICD2-19001)
  - o LOAD FACTORS = ± 20 G's (QUASI-STATIC + DYNAMIC)
  - o ACOUSTIC = 145 DB (OA)
- o STRENGTH CRITERIA
  - o FACTOR OF SAFETY: 1.5 (ULTIMATE)
- o STRENGTH EVALUATION
  - o ALL STRUCTURAL ELEMENTS SHOW VERY HIGH MARGINS FOR 20G LOAD CONDITION
- o STIFFNESS EVALUATION $f \simeq \frac{1}{2\pi} \sqrt{g/\delta_{max}}$

CONCEPT A	42 Hz
CONCEPT B	28 Hz

6.0 WEIGHT ESTIMATES

A preliminary weight estimate for the two MLSR conceptual designs is summarized in Table 9. These estimates are provided for both the 3-ply and alternative 6-ply facesheet for the primary reflectors. An allowance has been added for doublers, thermal paint and alignment prism assemblies. The latest estimate for the JPL receivers is included in the total assembly weight.

TABLE 9 MLSR WEIGHT ESTIMATES

ITEM	CONCEPT A 3-PLY FACESHEET REFLECTORS LBS	CONCEPT A 6-PLY FACESHEET REFLECTORS LBS	CONCEPT B 3-PLY FACESHEET REFLECTORS LBS	CONCEPT B 6-PLY FACESHEET REFLECTORS LBS
PRIMARY REFLECTOR AND RIBS	17.6	21.4	17.6	21.4
SECONDARY REFLECTORS AND SUPPORT	3.6	3.6	4.1	4.1
CROSS-TIES AND I/F FITTINGS	1.3	1.3	1.3	1.3
DOUBLERS AND SHIMS	1.2	1.2	1.2	1.2
INSULATION	1.3	1.3	1.3	1.3
PAINT	0.8	0.8	0.8	0.8
ALIGNMENT PRISM ASSEMBLIES	0.3	0.3	0.3	0.3
SUBTOTAL	26.1	29.9	26.6	30.4
CONTINGENCY	3.0	3.0	3.0	3.0
JPL RECEIVERS	35.0	35.0	35.0	35.0
TOTAL ASSEMBLY WEIGHT	64.1	67.9	64.6	68.4

7.0 MANUFACTURING PROCESS

The manufacturing plan for the MLSR antenna system is similar to the plan used on three offset reflector assemblies recently completed for the RCA TELESAT, RCA SATCOM and Intelsat V spacecraft. Because of the more precise contour shape required for MLSR, additional steps have been taken in the tooling and assembly processes to achieve the desired accuracy.

7.1 Tooling

The paraboloid layup tool surface will be cold-formed by bump-forming a one-piece plate into the approximate shape. This type mold is rough-machined on a vertical tracer lathe via a contoured template, stress-relieved, final-machined in unrestrained condition and then hand-polished to obtain the desired surface finish. The tool contour is measured in the unrestrained condition and its contour RMS verified. Prior to the fabrication of production parts, the tool is tool-proofed to assure that uniform heating is possible, as well as assured that it will not leak during vacuum/pressure cure of parts. The contoured template, with extra precision in its machining and polishing, is expected to have a contour accuracy of .0005 inch (RMS). The layup tool surface may be somewhat more inaccurate than the template, even with the normal precision in machining and polishing. Since the tool is so massive, its direct contour measurement on the Cordax machine is not feasible. To circumvent the problem, a plaster mold will be made that will provide a direct transfer of the tool contour to a plaster surface that can be measured on the Cordax. If the tool does not meet the desired accuracy of .0005 inch (RMS), then additional cuts will be made on the layup tool and the process repeated until the precision accuracy is achieved.

In addition to the primary reflector layup tool, an assembly fixture is planned that will position the two primary and secondary reflectors in the proper relative positions. Secondary reflector support beams and cross-tie members will be installed, shimmed and permanently fixed into position with splice plates and angle sections to complete the final assembly.

7.2 Fabrication Process

The manufacturing methods planned for the MLSR system have been successfully developed for fabrication of offset composite reflectors for RCA TELESAT and SATCOM and the Ford/WDL Intelsat V. The key elements in the manufacturing methods are: 1) Use of a conventional metal mold, 2) initial autoclave cure of balanced graphite/epoxy facesheet layup, 3) final cure of honeycomb sandwich assembly, 4) use of integrally bonded inserts for tooling balls located relative to dish contour and 5) contour adjustments using the built-in rib-reflector spacers prior to final permanent attachment. Details of the fabrication and assembly process are presented in Figure 17.

7.3 Contour Measurement

The four tooling balls installed into inserts on the reflective surface are the master references for all contour measurements and alignments. The tooling balls are installed just prior to the first contour measurement, but are removable at any time, leaving the insert head flush with reflector surface. The contour measurements will be made utilizing a Cordax 3000 measuring machine with oversize "Y" travel of 48 inches. This precision equipment performs measurements repeatable to 0.0003 inch per equipment specification and is the standard for all TRW antenna contour measurements.

The reflector will be positioned on the rotary table with the center of the reflector surface coincident with the center line of the rotary table. A series of Z probe readings will be made by turning the rotary table to the predetermined angles and lowering the probe of the Cordax. The probe is a spherical ground contact point of a dial indicator which permits each point to be measured in a consistent manner with no deflection in the reflector.

The cylindrical reference system data is entered into the Cordax computer at the touch of a switch. A tape is being punched at the same time with rectangular coordinates of each of the points for input into the time-shared company computer where the best fit parabola programs are stored. The tooling balls are measured before and after the contour measurement to assure no movement has occurred in the setup and this data is reserved for

FIGURE 17

MANUFACTURING HARDWARE FLOW FOR MICROWAVE LIMB SOUNDER RADIOMETER

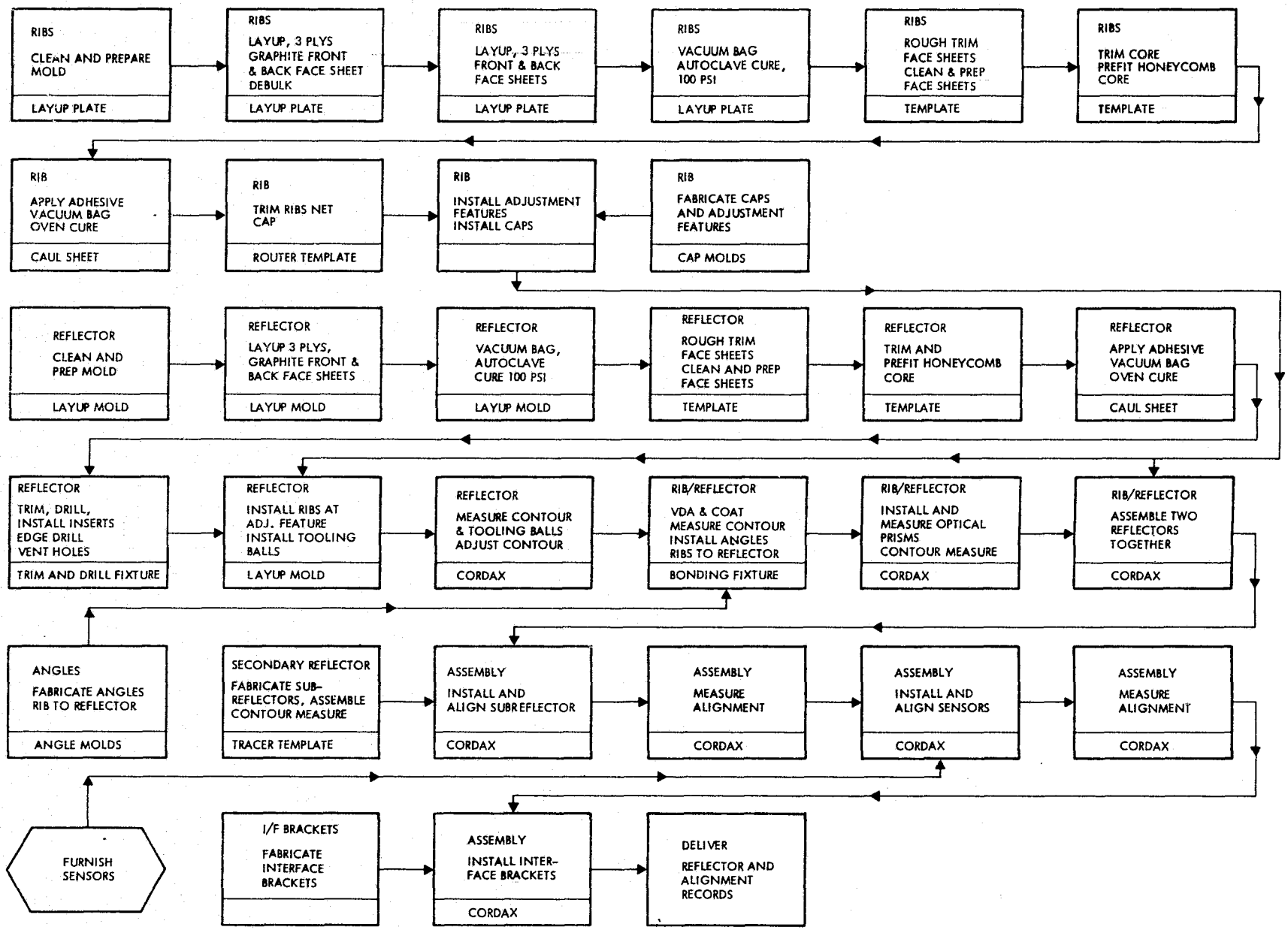

use with the output of the BFP program. After the contour points have been inspected, the data tape is entered into the company computer and a least squares analysis is made to determine the BFP to the measured points. The BFP mathematically defines the particular paraboloid which most closely fits the measured data.

The BFP is defined as having the least sum-of-squares deviation between the theoretically perfect paraboloid and the given data. For a deviation, the different in the path lengths between rays which strike a data point and rays which hit the theoretical surface was chosen, as it is closely related to the RF performance of a parabolic antenna. This difference is denoted as λ. The one-half λ values are averaged and weighted to give the one-half λ RMS. The BFP analysis produces the following for evaluation:

- Sum of weighted squares.
- A one-half λ RMS value.
- The coordinates of the BFP vertex.
- The coordinates of the BFP focal point.
- The focal length of the BFP.
- A tabular listing of input coordinates, coordinat es on the BFP, a path length error value and an approximate ΔZ error for each.
- A data file formatted for contour plotting.

TRW has available another computer program, TDCOGO, which will now be used in the complete transformation of the coordinates available in the Cordax and best fit reflector reference systems. The rectangular coordinates of the best fit vertex, the best fit focal point of the reflector, as it is positioned on the Cordax, and the cylindrical coordinates of the four tooling ball centers are entered into the program. The output is a listing of the rectangular and spherical coordinates of all the input points in the Cordax and reflector reference systems. The individual data points and collective RMS and pointing errors are assessed for each reflector-rib setting. Adjustments are then made at specific contour adjustment spacer locations and the process repeated. Once the RMS, pointing and focal length parameters have reached acceptable values, then the adjustment features are locked in place and the rib-reflector angle members are added to permanently fix the contour.

8.0 PROPOSED DEVELOPMENT PLAN

To provide a basis for the ROM costing, a program development plan, as shown in Figure 18, is proposed. A key element of the plan is to design, fabricate and test a reflector-rib subassembly prior to Critical Design Review (CDR) to confirm the assembly techniques will meet the RMS accuracy requirements. An estimated seven months is required for CDR. The first complete assembly of MLSR will be used as a qual model. Vibration, acoustic and thermal cycling tests are planned as the qual test program, which will be completed prior to the Final Design Review. The three flight units will be fabricated and acceptance-tested over approximately a six-month period following the FDR, resulting in an overall program schedule of twenty months.

The qualification and acceptance test program is a minimum level of testing to demonstrate the design adequacy for the expected operational environments. The qualification model tests consist of contour measurements and alignment checks prior to testing, a low level sine sweep (3 axes), a random vibration (single axis), an acoustic test and a thermal cycling test to hot and cold extremes. A post-test contour and alignment check will be made. The flight units will be subjected to an acoustic test only, with pre and post-test checks of the contour and alignment. RF testing is not proposed and material characterization tests are not planned based on the materials selections discussed in Section 5.0. Since there are no moving parts in the assembly, mechanical functional tests are not required. Standard product assurance inspections and reviews are planned for all phases of fabrication, test and hardware delivery.

FIGURE 18

PROPOSED DEVELOPMENT PROGRAM PLAN
MICROWAVE LIMB SOUNDER RADIOMETER

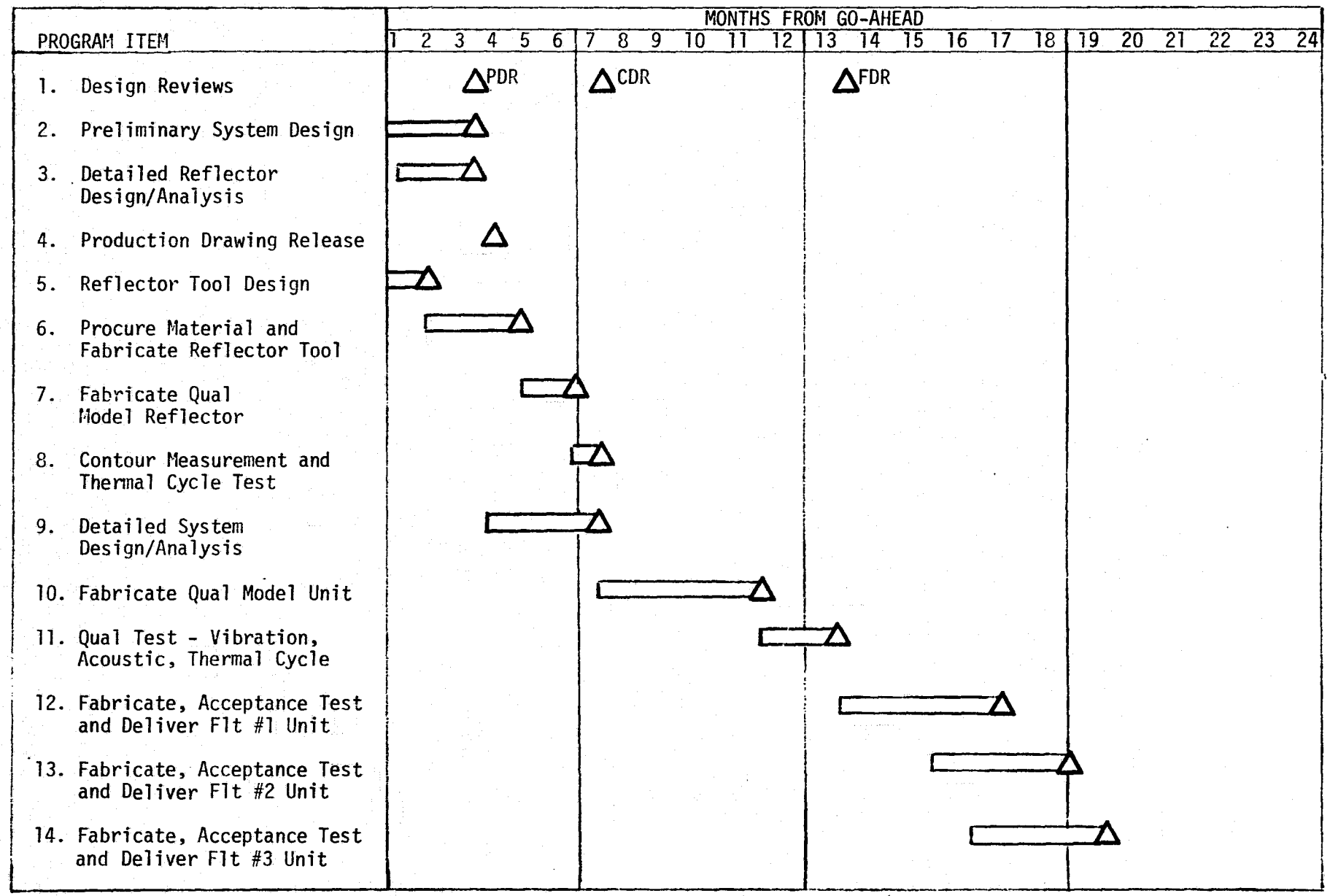

APPENDIX A

STRESS ANALYSIS

TRW
DEFENSE AND SPACE SYSTEMS GROUP
ONE SPACE PARK • REDONDO BEACH • CALIFORNIA 90278

INTEROFFICE CORRESPONDENCE

8712.4-78-101

TO: A. P. Goldberg

CC: J. S. Archer
S. J. Voce

DATE: December 12, 1978

SUBJECT: Stress Analysis for Feasibility Study of Graphite Epoxy Antenna Reflectors

FROM: C. K. Cheung CKCheung
BLDG. 82 MAIL STA. 1758 EXT. 53556

Stress analyses for two conceptual designs of Graphite Epoxy Antenna Reflectors are completed. According to TRWSAP outputs, stress levels on the antenna reflectors are very low due to 20g accelerations and they are considered to be not critical to both of the conceptual designs. The enclosed stress analyses show positive margins of safety for all parts of the antenna reflectors, which are structurally adequate and acceptable. No change to the present designs is required.

Approved: M. P. Sodeika
M. P. Sodeika, Head
Structural Systems Section

Encl. Antenna Reflector Stress Analysis

SYSTEMS 0180 REV. 3-76

STRESS ANALYSIS FOR FEASIBILITY STUDY OF GRAPHITE EPOXY ANTENNA REFLECTORS

TABLE OF CONTENTS

TRWSAP — CASE 9 MULTIPLE SUPPORT	1.1
DEFLECTIONS	1.2
REFLECTOR SURFACES	1.3
REFLECTOR A	1.4
RIB STRUCTURE — H/C A	1.5
RIB STRUCTURE — CAP & ANGLES A	1.6
SECONDARY REFLECTOR SUPPORT A	1.7
ANTENNA A TO B BOTTOM TIE (OUTER)	1.8
ANTENNA A TO B BOTTOM TIE (INNER)	1.9
CHANNEL FITTINGS	1.10
ANTENNA B	1.15
TRWSAP — CASE 10 SINGLE SUPPORT	1.16
TABLE 1 — ALLOWABLES FOR REFLECTOR SURFACE	1.18
TABLE 2 — SANDWICH MECHANICAL PROPERTIES	1.19
TABLE 3 — LAMINATE MECHANICAL PROPERTIES	1.20

FEASIBILITY STUDY OF GRAPHITE EPOXY ANTENNA REFLECTORS FOR A MICROWAVE LIMB SOUNDER RADIOMETER

TRWSAP MODEL CASE 9 MULTIPLE SUPPORT

MEMBER DEFINITIONS — BEAMS

ANTENNA A

MEMBERS 1 – 44	RIB STRUCTURE, H/C SECTION	MAT'L. (3)
MEMBERS 45 – 88	RIB STRUCTURE, CAP AND ANGLE	MAT'L. (2)
MEMBERS 89 – 98	SECONDARY REFLECTOR SUPPORT	MAT'L. (3)

ANTENNA B

MEMBERS 99 – 142	RIB STR., H/C	(3)
MEMBERS 143 – 186	RIB STR., CAP AND ANGLE	(2)
MEMBERS 187 – 196	SEC. REFLECTOR SUPPORT	(3)

A TO B

MEMBERS 197, 206	TOP TIE + BOLT	(3)
MEMBERS 198 – 205	BOTTOM TIES	(3)

JOINT CONSTRAINTS

SUPPORTING POINTS

JOINT	D-X	D-Y	D-Z	R-X	R-Y	R-Z
12	✓	✓	✓	—	—	—
24	✓	✓	✓	—	—	—
112	✓	✓	✓	—	—	—
124	✓	✓	✓	—	—	—

50, 54, 143, 147, 150 + 154 — ALL

PLATE ELEMENTS — REFLECTORS

ELEMENTS, 1–60 ANTENNA A

ELEMENTS, 61–120 ANTENNA B

CHECK DEFLECTIONS

DEFLECTIONS AT SECONDARY REFLECTOR :

	JOINT	D-X	D-Y	D-Z	R-X	R-Y	R-Z
CASE 1;	48	8.33E-4	-1.12E-10	5.77E-4	3.0E-10	-5.05E-3	-3.0E-10

DEFLECTIONS AT OTHER LOCATIONS ARE VERY SMALL AND INSIGNIFICANT

CASE 2;	48	-7.17E-10	1.32E-3	-7.37E-10	6.28E-6	-2.33E-12	6.1E-6
CASE 3;	48	5.20E-4	-1.73E-9	8.12E-4	1.29E-9	-5.05E-3	-1.26E-9

CHECK MASS OF STRUCTURE DUE TO 10 g LOADING CONDITION

CASE 1;

JOINTS	F-X	F-Y	F-Z
12	-.2085	.38798	-.2015
24	-.2084	-.38798	-.2015
112	-.06262	.28986	.2015
124	-.0627	-.28985	.2014
Σ	-.54225	0	0

$$\text{MASS} = \frac{\Sigma F \cdot a}{g} = \frac{(.54225)(32.2 \times 12)}{10} = 20.95 \text{ LBS.}$$

GOOD

CASE 2; $\Sigma F_x = 0$, $\Sigma F_y = -.54225$, $\Sigma F_z = 0$ OKAY

CASE 3; $\Sigma F_x = 0$, $\Sigma F_y = 0$, $\Sigma F_z = -.5422$ OKAY

WHERE ; CASE 1 X-ACCEL. = 10 g
CASE 2 Y-ACCEL. = 10 g
CASE 3 Z-ACCEL. = 10 g

REFLECTOR SURFACE

MATERIAL — COMPOSITE / AL. HONEYCOMB

SKINS ; GRAPHITE GY-70 , 3 PLY 0, ±60 , WEAVE 50 EPI

RESIN ; 5208 (30 % BY CONTENT)

CORE ; AL. 1/4 CELL SIZE , 1.6 LB./FT.^{3} DENSITY , 1/4" THICK

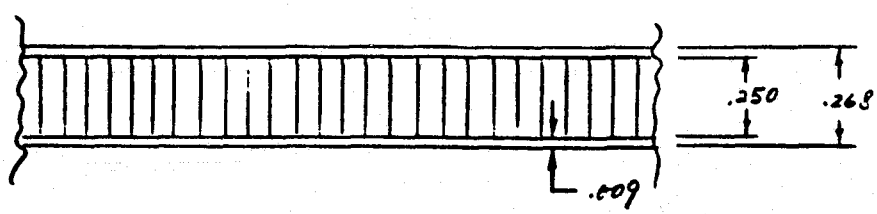

$E = 15.2 \times 10^6$ PSI

$G = 5.8 \times 10^6$ PSI

$\mu = 0.30$

(REF. : TABLES 1, 2 AND 3 FOR MAT'L. PROPERTIES)

REFLECTOR SURFACE

LOAD CASE 1 — REFLECTOR A (INERTIA LOAD IN X-DIRECTION)

THE BIGGEST STRESSES FOR PLATES ARE AT ELEMENTS 13 AND 53.

MEMBRANE STRESSES			BENDING STRESSES		
σ_x	σ_y	σ_{xy}	σ_x	σ_y	σ_{xy}
-1.808	-.146	.279	.114	.116	-.358

CALCULATE PRINCIPAL STRESSES

FOR MEMBRANE STRESS,

$$\sigma_{n\,MAX} = \left(\frac{\sigma_x + \sigma_y}{2}\right) + \sqrt{\left(\frac{\sigma_x - \sigma_y}{2}\right)^2 + (\sigma_{xy})^2}$$

$$= \left(\frac{-1.808 - .146}{2}\right) + \sqrt{\left(\frac{-1.808 + .146}{2}\right)^2 + (.279)^2}$$

$$= -.975 + \sqrt{.681 + .078}$$

$$= -.975 + .871$$

$$= -.104$$

$$\sigma_{n\,MIN.} = -1.846$$

FOR BENDING STRESS,

$$\sigma_{n\,MAX} = \left(\frac{.114 + .116}{2}\right) + \left[\left(\frac{.114 - .116}{2}\right)^2 + (-.358)^2\right]^{1/2}$$

$$= .115 + .358$$

$$= .473$$

ULT. STRESS ON THE PLATE ELEMENT FOR 20 g LOADING CONDITION

$= 2(-1.846 - 0.473)$ PSI

$= -4.64$ PSI

FOR VERY SMALL SHEAR STRESSES, MIN. ALLOWABLES (REF. TABLE 1)

$\sigma_{xT} = 6{,}400$ PSI , $\sigma_{xc} = 7{,}000$ PSI

M. S. FOR REFLECTOR SURFACE $= \frac{7000}{4.64 \times 1.5} - 1 =$ HIGH

RIB STRUCTURE – H/C

LOAD CASE 1 – ANTENNA A

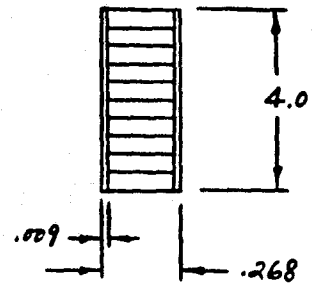

4" DEEP, COMPOSITE / AL. HONEYCOMB SAME AS REFLECTOR SURFACE.

F_c FOR GY70 = 20200 × 0.80 PSI

ELEMENTS 1–44, SECTION 1, $A = .072$, $I_y = .096$, $I_z = .00121$
(ANTENNA B 99–142)

FROM TRWSAP OUTPUTS, THE BIGGEST AXIAL LOADS ARE AT ELEMENTS 24 AND 42, AND THE BIGGEST BENDING MOMENTS ARE AT ELEMENTS 12 AND 20, NEXT TO THE SUPPORTING JOINTS.

EL.	JOINT	F-X	F-Y	F-Z	M-Y	M-Z
24	27	0.127	-.0025	.0074	-.201	.0009
+ (42)	12	-0.127	.0025	-.0074	.133	-.0239
12	12	0.0258	.0081	-.01	.145	.04
+ (20)	13	-0.0258	-.0081	.01	-.089	.0047

FOR ELEMENT 24, MAX. COMBINE STRESSES;

$$f_s = \frac{-.127}{.072} \pm \frac{(.133)(2)}{.096} \pm \frac{(.024)(.13)}{.00121} = -1.764 \pm 2.771 \pm 2.579$$

= 7.11 PSI COMP.
or 3.59 PSI TENSION

FOR ELEMENT 12, MAX. COMBINE STRESSES:

$$f_s = \frac{-.026}{.072} \pm \frac{(.145)(2)}{.096} \pm \frac{(.04)(.13)}{.00121} = -.36 \pm 3.02 \pm 4.30$$

= 7.68 PSI COMP.
or 6.96 PSI TEN.

$$\text{M.S. FOR } 20g = \frac{20{,}200 \times 0.80}{2(7.68)(1.50)} - 1 = \underline{\text{HIGH}}$$

RIB STRUCTURE — CAP AND ANGLES

LOAD CASE 1 — ANTENNA A

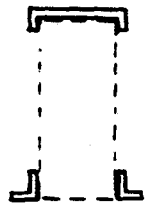

CAPES AND ANGLES ;
COMPOSITE HM 1000/KEVLAR
2 PLY NARMCO RESIN 934

$t = 0.011$
$E = 6.95 \times 10^6$
$G = 2.70 \times 10^6$
$\mu = 0.30$

ALLOWABLES; $\sigma_T = 49{,}200$ PSI (0°), 38.600 PSI (90°)

ELEMENTS 45 – 88 , SECTION 2 , $A = .01925$, $I_y = .0713$, $I_z = .0006$
(ANTENNA B 143 – 186)

FROM TRWSAP OUTPUTS, CRITICAL AXIAL AND BENDING LOADS ARE ON ELEMENTS NEXT TO THE SUPPORTING JOINTS.

EL.	JOINT	F-X	F-Y	F-Z	M-Y	M-Z
68 + (86)	27	.0155	-.00057	.00252	-.0683	.0002
	12	-.0155	.00057	-.00252	.0452	-.0054
64 + (56)	23	.00316	-.00183	.00341	.0302	-.00107
	24	-.00316	.00183	-.00341	-.0493	-.00917

FOR ELEMENT 68 , MAX. COMBINE STRESSES ;

$$f_s = \frac{-.0155}{.01925} \pm \frac{(.0452)(2)}{.0713} \pm \frac{(.0054)(.13)}{.0006} = -.0805 \pm 1.268 \pm 1.170$$
$$= -3.24 \text{ PSI COMP.}$$
$$\text{or } 1.633 \text{ PSI TEN.}$$

FOR ELEMENT 64,

$$f_s = -\frac{.0032}{.01925} \pm \frac{(.0493)(2)}{.0713} \pm \frac{(.0092)(.13)}{.0006} = -.166 \pm 1.383 \pm 1.993$$
$$= -3.54 \text{ PSI COMP.}$$
$$\text{or } 3.21 \text{ PSI TEN.}$$

$$\text{M.S. FOR } 20g = \frac{38{,}600}{2 \times 3.21 \times 1.50} - 1 = \underline{\text{HIGH}}$$

SECONDARY REFLECTOR SUPPORT

LOAD CASE 1 – ANTENNA A

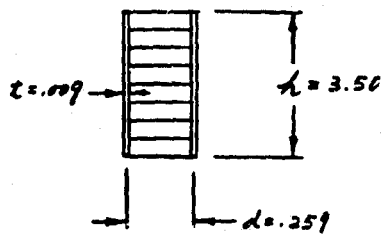

3.50" DEEP, COMPOSITE/AL. HONEYCOMB
SAME AS REFLECTOR SURFACE

F_c FOR GY 70 = 20.200 x 0.80 PSI

ELEMENTS 89 – 98, SECTION 3, A = .063, I_x(J) = .00001, I_y = .00106, I_z = .0643

THE MOST CRITICAL STRESSES ARE AT ELEMENTS 89 AND 94 LOCATED AT THE BOTTOM JOINTS OF THIS SUPPORT STRUCTURE..

EL.	JOINT	F-X	F-Y	F-Z	M-X	M-Y	M-Z
89	37	.00415	.00182	.0129	-.0516	-.0527	.01
(94)	42	-.00415	-.00182	-.0129	.0516	.0269	-.0063

CHECK SHEAR STRESS DUE TO M_x,

MAX. SHEAR ON FACE SHEETS DUE TO 20 g

$$= \frac{2q}{A}$$

$$= \frac{2\,M/d}{h\,t}$$

$$= \frac{2\,(.0516)}{(.259)(3.5)(.009)}$$

$$= 12.65 \text{ PSI}$$

ROTATION AROUND X-AXIS, $= \frac{2TL}{GJ} = \frac{(2)(.05)(2)}{(2.7\times10^{6})(1\times10^{-5})} = .0074$ RAD OR $0.42°$

M.S. = HIGH

COMBINE STRESS $= \frac{.00415}{.063} + \frac{(.0516)(1.75)}{.00106} + \frac{(.01)(.13)}{.0643} = .066 + 85.19 + .02$
$= 85.3$ PSI COMP.

$$M.S = \frac{20{,}200 \times 0.80}{2 \times 85.3 \times 1.50} - 1 = \text{HIGH}$$

ANTENNA A TO B BOTTOM TIE (OUTER)

LOAD CASE 1

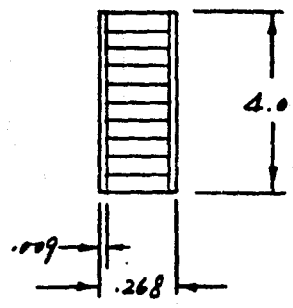

4" DEEP, COMP./AL. HONEYCOMB

SAME AS RIB STRUCTURE

F_c FOR GY70 = 20,200 x 0.80 PSI

ELEMENTS 197 AND 206 ; SECTION 1

$A = .072$, $I_x = 0$, $I_y = .096$, $I_z = .00121$

EL	JOINT	F-X	F-Y	F-Z	M-Y	M-Z
197	37	-.104	.00036	.00412	.0673	.0076
(206)	137	.104	-.00036	-.00412	-.223	.0059

FOR ELEMENT 197, MAX. COMBINE STRESSES ;

$$f_s = \frac{P}{A} + \frac{M_y c_y}{I_y} + \frac{M_z c_z}{I_z}$$

$$= \frac{.104}{.072} + \frac{(.223)(2)}{.096} + \frac{(.0059)(.13)}{.00121}$$

$$= 1.444 + 4.646 + .634$$

$$= 6.724 \text{ PSI COMP.}$$

$$\text{M.S. FOR 20 g} = \frac{20{,}200 \times .80}{2 \times (6.724)(1.50)} - 1 = \underline{\text{HIGH}}$$

BEAMS JOINING ANTENNA A TO B
BOTTOM INNER TIE

LOAD CASE 1

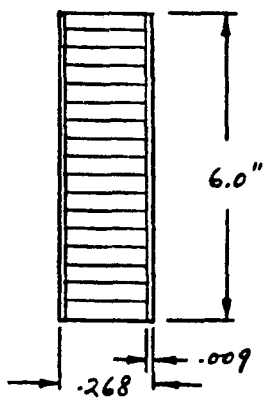

6" DEEP, COMPOSITE / AL. HONEYCOMB
SAME MAT'L. AS REFLECTOR SURF.

$F_c = 20{,}200 \times 0.80$ PSI

ELEMENTS 198 – 205

SECTION 4 , $A = .108$, $I_x = .00001$, $I_y = .324$, $I_z = .00237$

EL.	JOINT	F-X	F-Y	F-Z	M-Y	M-Z
200	43	-.11	-.0138	.0294	-.0429	-.05
(204)	112	.11	.0138	-.0294	-.279	-.102

FOR ELEMENT 200 , JOINT 112 , MAX. COMBINE STRESS ;

$$f_s = \frac{.11}{.108} + \frac{(.279)(3)}{.324} + \frac{(.101)(.13)}{.00237}$$

$$= 1.01 + 2.58 + 5.54$$

$$= 9.13 \text{ PSI COMP.}$$

$$\text{M.S. FOR 20 } g = \frac{20{,}200 \times .80}{2\,(9.13)(1.50)} - 1 = \underline{\text{HIGH}}$$

CHANNEL FITTINGS — FOR CONNECTING REFLECTORS TO SATEL.

CONCEPTUAL DESIGN

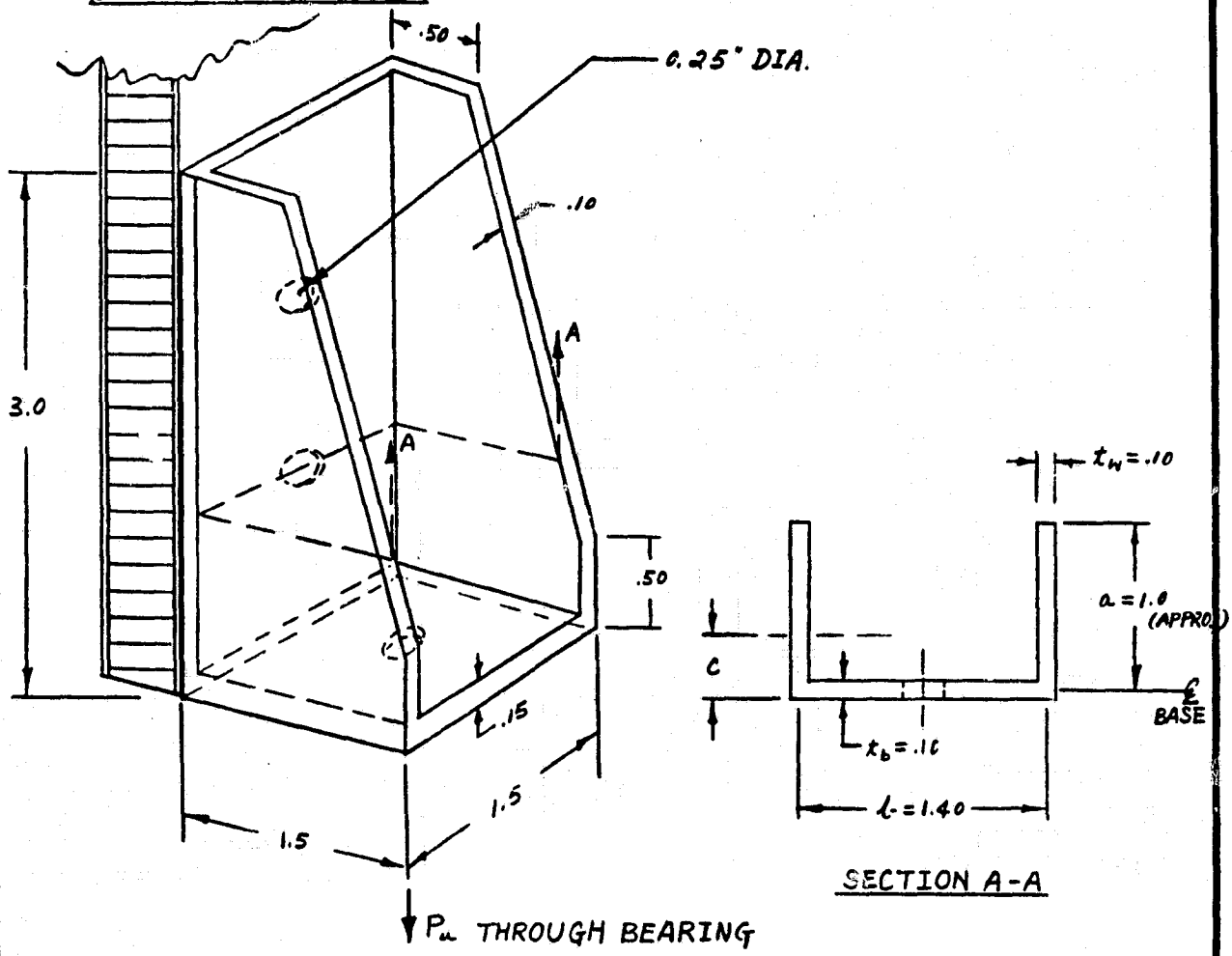

TOTAL LOAD ON THE ANTENNA REFLECTOR DUE TO 20 g = 21 LBS × 20 = 420 LBS

ASSUMING THE REACTIVE LOAD IS EVENLY DISTRIBUTED AMONG FOUR SUPPORTING FITTINGS (PICTURE ABOVE), THEREFORE, REACTIVE LOAD PER JOINT IS 420 LBS./4 OR 105 LBS. MAXIMUM.

MAT'L.; 2024-T351, QQ-A-250/4

$F_{tu} = 62$ KSI

$F_{ty} = 47$ KSI (L), 42 KSI (LT)

$F_{cy} = 39$ KSI (L), 44 KSI (LT)

$F_{su} = 37$ KSI

$\rho = .10$ LB./IN.^{3}

$F_{bru} = 115$ KSI, $e/D = 2.0$

$F_{bry} = 87$ KSI, $e/D = 2.0$

(REF.: LOCKHEED STRESS MEMO NO. 88 a - TENSION FITTINGS)

CHANNEL FITTING ANALYSES

A. WALL ANALYSIS (SECTION A-A)

(1) a. $A_g = t_w(2a + b) = (.10)(2 + 1.40) = 0.34$
(GROSS AREA)

THE MAX. TENSION STRESS, f_{tu}, IN THE FITTING WALL DUE TO ULTIMATE LOAD, P_u.

$$f_{tuw} = \frac{P_u \times 1.50}{A_g} = \frac{105 \times 1.50}{0.34} = 463 \text{ PSI}$$

b. $R_{1e} = Dt = (0.25)(0.10) = 0.025$

$D_{1e} = R_{1e}/t = 0.25$

$A_g = 0.34$

$\Sigma R_1 = 0.25$

$\Sigma R_p = 0.25$

$$R_e = \Sigma R_p - \frac{P}{5D_{1e}}(\Sigma R_p - \Sigma R_1) = 0.25$$

TENSION EFFICIENCY FACTOR FOR THIS WALL;

$$\eta = 1 - \frac{R_e}{A_g} = 1 - \frac{0.25}{0.34} = 0.26$$

(REF.; LOCKHEED STRESS MEMO 56 b)

C. THE WALL TENSION STRESS RATIO,

$$R_{tuw} = \frac{j_{mu} f_{tuw}}{\eta F_{tu}} \qquad \text{WHERE } j_{mu} = 1.0$$

$$= \frac{(1.50)(105)}{(0.26)(62,000)}$$

$$= .01$$

(2) BENDING IN WALL

a.
$$c = \frac{\frac{t_w}{2}\left(b - \frac{t_w}{2}\right) + a(a + t_w)}{2a + b}$$
$$= \frac{0.05\,(1.40 - 0.05) + 1.0\,(1.0 + 0.10)}{2 + 1.4}$$
$$= \frac{.0675 + 1.10}{3.40}$$
$$= 0.343$$

b. THE APPLIED ULTIMATE BENDING MOMENT, m_u,

$$m_u = p_u\,(d - c) = (1.50 \times 150)(0.75 - 0.343)$$
$$= 64 \text{ IN-LB.}$$

C. $I_{x'}$ OF SECTION A-A

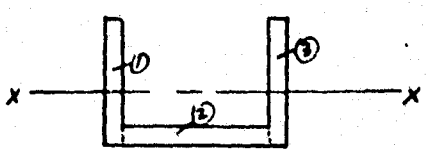

PART	A	AY	AY^2	I_{x_0}
1	.10	.045	.02025	.0083
2	.13	0	0	.00011
3	.10	.045	.02025	.0083
Σ	.43	.09	.0405	.01671

$$\bar{y} = \frac{\Sigma AY}{\Sigma A} = \frac{.09}{.43} = 0.209$$

$$I_{x'} = \Sigma I_{x_0} + \Sigma AY^2 - \bar{y}(AY)$$
$$= .01671 + .0405 - 0.209\,(.09)$$
$$= .0384$$

THE ALLOWABLE BENDING MOMENT, M_u,

$$= F_{bu}\frac{I}{C}$$
$$= 62{,}000 \times \frac{.0384}{.0343}$$
$$= 69{,}429 \text{ PSI}$$

d. THE WALL BENDING RATIO, WHERE $j_{mu} = 1.0$

$$R_{buw} = \frac{m_u j_{mu}}{M_u} = \frac{64}{69429} = .001$$

(3) INTERACTION – BENDING AND TENSION

$$M.S. = \frac{1}{R_{bu} + R_{tu}} - 1 = \underline{HIGH}$$

B. END PAD ANALYSIS

(1) BENDING OF END PAD

a. $\frac{r_i}{a} = \frac{.125}{1.0} = .125$, $\frac{b}{a} = \frac{1.40}{1.0} = 1.40$

b. $K_3 = 0.85$ (REF.; LOCKHEED S.M. 88a, FIG. 8)

c. BENDING STRESS (ULT.)

$$f_{bue} = \frac{P_u (2d - t_b) K_3}{t_e^2 a} = \frac{(1.50 \times 105)(1.5 - .10)(0.85)}{(.15)^2 (1.0)} = 8330 \text{ PSI}$$

d. ALLOWABLE BENDING STRESS FROM S.M. 53 FIG. 1c. ASSUMING A RECT. SECTION, K = 1.50.

$F_{bu} = 87,000$ PSI

$$M.S. = \frac{F_{bu}}{f_{bue}} - 1 = \frac{87,000}{8330} - 1 = \underline{HIGH}$$

(2) SHEAR OF END PAD

a. SHEAR STRESS DUE TO APPLIED LOAD,

$$f_{su_e} = \frac{P_u\,(1.50)}{2\,\pi\,r_o\,t_e}$$

$$= \frac{(105)(1.50)}{2\,\pi\,(0.25)(0.15)}$$

$$= 668.5 \text{ PSI}$$

b. SHEAR ALLOWABLE,

$$F_{su} = 37{,}000 \text{ PSI}$$

$$M.S. = \frac{37{,}000}{668.5} - 1 = \underline{\text{HIGH}}$$

THE ABOVE CHANNEL FITTING DESIGN IS STRUCTURALLY ADEQUATE FOR 20 g LOADING CONDITION.

TOTAL WEIGHT OF FITTING

$\rho = 0.10$ LBS. / IN.^{3}

VOL. OF EACH FITTING

$= 2\,(0.5 \times 1.5 \times 3.0 \times 0.10) + (1.50 \times 3.0 \times 0.1) + (1.5 \times 1.5 \times 0.15)$

$= 0.45 + 0.45 + 0.338$

$= 1.238$ IN^3

WT. OF EACH FITTING

$= 0.10 \times 1.238$ LBS

$= 0.124$ LBS.

TOTAL WT. OF 4 FITTINGS

$= (0.124 \times 4)$ LBS.

$= 0.5$ LBS.

CHANNEL FITTINGS

CHECK ON INTERFACE FITTINGS FOR REVISED WEIGHT CONDITION

ASSUME ASSEMBLY WEIGHT = 80 LBS

$$\text{FORCE PER FITTING} = \frac{(20G)(80\,\text{LBS})}{4\ \text{FITTINGS}} = 100\ \text{LBS}$$

ASSUME NONUNIFORM LOAD AMONG FITTINGS

$$F_{MAX} = (1.5)(400) = 600\ \text{LBS}$$

A. WALL ANALYSIS - PG. 1.11

$$f_{t_{uw}} = \frac{600}{105}\,463 = 2646\ \text{psi}$$

$$M_u = \frac{600}{105}(64) = 366\ \text{in-lbs}$$

$$M.S. = \frac{1}{\frac{2646}{(0.26)(63{,}000)} + \frac{366}{67247}} - 1 \cong 4.9$$

B. END ANALYSIS PG. 1.13

BENDING

$$f_{bu_\ell} = \frac{600}{105}(8330) = 47{,}600\ \text{psi}$$

$$M.S. = \frac{87{,}000}{47{,}600} - 1 = 0.83$$

SHEAR

$$f_{su} = \frac{600}{105}(668.5) = 3820\ \text{psi}$$

$$M.S. = \frac{37{,}000}{3820} - 1 = \text{HIGH}$$

ANTENNA B.

LOADS ON ANTENNA B FOR L.C. 1 ARE NOT AS CRITICAL AS THOSE ON ANTENNA A. BY COMPARISON METHODS, ALL PARTS IN ANTENNA B HAVE BIG MARGINS OF SAFETY.

FOR LOAD CASE 2, INERTIAL LOAD IN Y-DIRECTION, AND LOAD CASE 3, INERTIAL LOAD IN Z-DIRECTION, THEY ARE THE SAME MAGNITUDE AS LOAD CASE 1.
BY COMPARISON WITH THE ANALYSES OF LOAD CASE 1, STRESSES ON THE ANTENNAS DUE TO LOAD CASE 2 AND 3 ARE VERY LOW. MARGIN OF SAFETY ON ALL PARTS WOULD BE BIG TOO. THEREFORE, NO DETAIL ANALYSIS IS REQUIRED.
BASED ON THE ABOVE ANALYSES, DESIGN OF THE GRAPHITE EPOXY ANTENNA REFLECTORS IS STRUCTURALLY ADEQUATE FOR PRESENT LOADING CONDITIONS.

TRWSAP MODEL 10

SECOND CONCEPTUAL DESIGN - SINGLE SUPPORT FOR SECONDARY REFLECTOR

CHECK DEFLECTIONS

CASE	JOINT	D-X	D-Y	D-Z	R-X	R-Y	R-Z
1	50	.086	-.00002	.086	-.00001	.0158	-.00001
2	↓	.00003	.00022	.00003	.00003	.00004	.00003
3	↓	.086	-.00002	.086	-.000023	.0157	-.00004

DEFLECTIONS AT OTHER LOCATIONS ARE VERY SMALL AND INSIGNIFICANT. BY COMPARING THESE RESULTS WITH THOSE OF THE MULTIPLE SUPPORT DESIGN, THIS DESIGN IS WEAKER. HOWEVER, THE ABOVE DEFLECTIONS ARE OF VERY SMALL MAGNITUDES, THEY ARE NOT CRITICAL ENOUGH TO AFFECT THE INTEGRITY OF THE STRUCTURE.

EQUILIBRIUM CHECK

CHECK MASS OF STRUCTURE DUE TO 10 g LOADING CONDITION.

CASE 1 - X ACCEL. = 10 g

JOINT	F-X	F-Y	F-Z
12	-.2434	.3191	-.2255
24	-.1923	-.3191	-.1658
112	-.0248	.3872	.2255
124	-.0759	-.3872	.1658
Σ	-.5364	0	0

$$MASS = \frac{\Sigma F.a}{g} = \frac{(.5364)(32.2 \times 12)}{10} = 20.73 \text{ LBS}$$

GOOD

CASE 2 – Y ACCEL. = 10 g

$\Sigma F_x = 0$, $\Sigma F_y = -.5366$, $\Sigma F_z = 0$ OKAY

CASE 3 – Z ACCEL. = 10 g

$\Sigma F_x = 0$, $\Sigma F_y = 0$, $\Sigma F_z = -.5365$ OKAY

(1) CHECK STRESSES FOR REFLECTOR SURFACES

STRESS LEVELS ARE A LITTLE HIGHER THAN THOSE OF THE MULTIPLE SUPPORT DESIGN. HOWEVER, THEY ARE NOT SIGNIFICANT ENOUGH TO AFFECT THE INTEGRITY OF THE STRUCTURE. THE SINGLE SUPPORT DESIGN IS STRUCTURAL ADEQUATE.

(2) RIB STRUCTURE – CAP AND ANGLES

SAME AS THE ABOVE COMPARISON.

(3) SECONDARY REFLECTOR SUPPORT

THE BIGGEST TORSIONAL FORCES ARE AT THE TOP MEMBERS INSTEAD OF AT THE LOWER MEMBERS OF THE SUPPORTING RIBS AS IN THE MULTIPLE SUPPORT DESIGN.

ELEMENTS ; 95 & 96 , JOINTS 48 , 49 , & 50

ELEMENTS ; 193 & 194 , JOINTS 148 , 149 , 150

HOWEVER, SHEAR STRESSES DUE TO TORSION ARE NOT CRITICAL.

(4) CONNECTION FROM ANTENNA A TO B , BOTTOM TIE

SAME AS IN (1) COMPARISION.

INTERACTION YIELD SURFACE FOR
DE SCANNING RADIOMETER
(0/60/-60/-60/60/0) FACESHEET - MT3-69-2

SQS 11/29/78 14.14.

SYMBOL	TAU-XY
⊙	.000E+01
▲	.200E+04
+	.400E+04
X	.600E+04
⊕	.800E+04
↑	.100E+05
X	.103E+05

LAMINATE PROPERTIES		LAYER PROPERTIES		LIMITING STRAINS	
E-X =	.134E+08	E-1 =	.360E+08	EPS-1T =	.870E-03
E-Y =	.134E+08	E-2 =	.104E+07	EPS-2T =	.267E-02
G-XY =	.520E+07	G-12 =	.125E+07	EPS-1C =	-.895E-03
NU-XY =	.268E+00	NU-12 =	.250E+00	EPS-2C =	-.859E-02
TAU-MAX =	.104E+05	NU-21 =	.722E-02	EPS-12 =	.253E-02

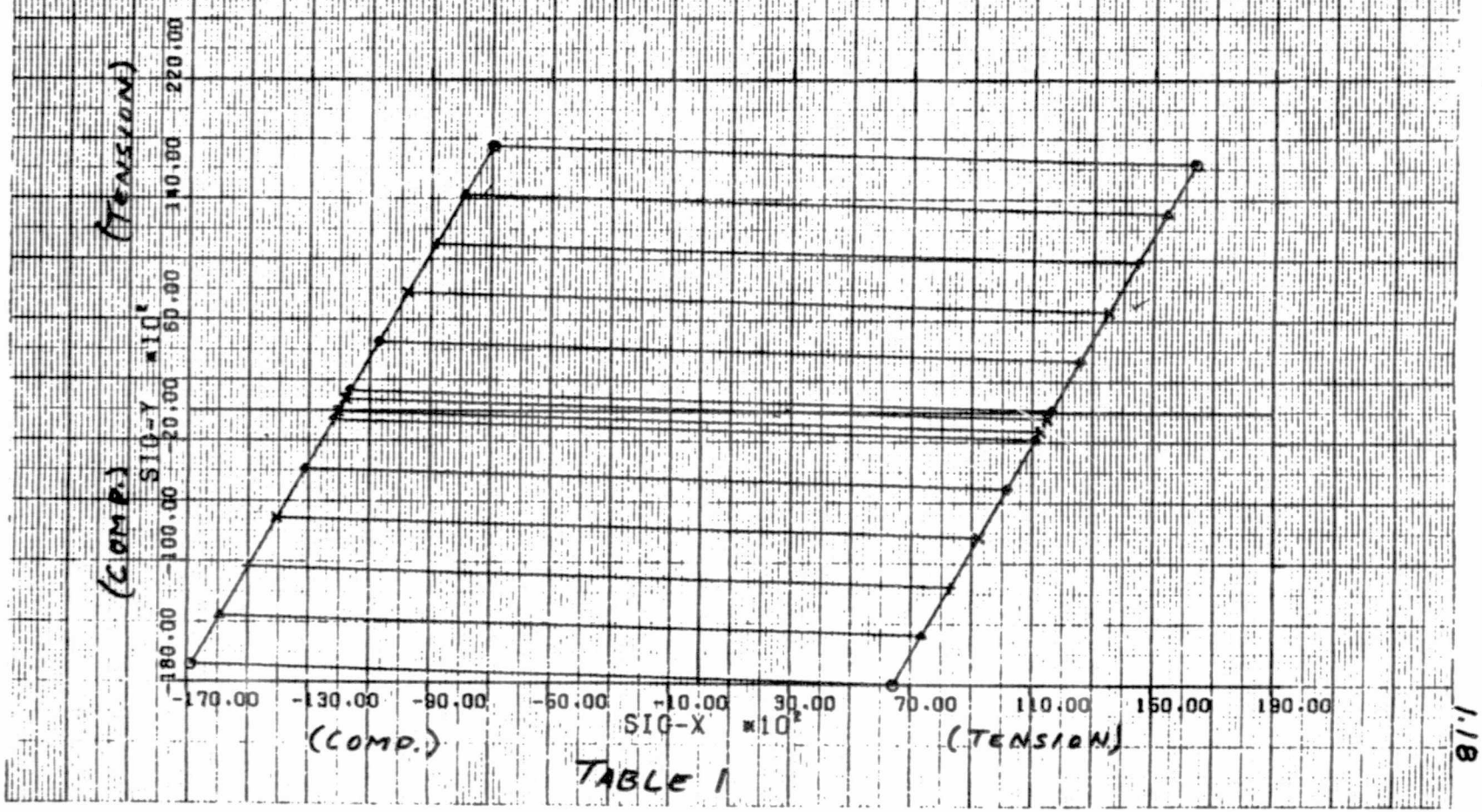

TABLE 1

ORIGINAL PAGE IS
OF POOR QUALITY

Table 3 Laminate Mechanical Properties

Fiber Type	Weave	Resin Type (Content percent)	Ply Thickness (in.)	Laminate Weight (lb/ft^2/ply)	Orientation	Tensile Strength (ksi)	Tensile Modulus (msi)	Et	Type Cure
GY70	50 end/inch Unidirectional (6 ply)	E702 (32)	0.0028	0.03	0°	73.6	39.0	0.655	Autoclave
GY70	50 end/inch Unidirectional (6 ply)	5208 (30)	0.003	0.029	0°	71.3	37.0	0.777	Autoclave
HM-1000	30x30 8-harness Satin (6 ply)	934 (30)	0.0063	0.058	0,90	60.0	19.1	0.722	Autoclave
GY70	40x40 Twill (2 ply)	8517 (35)	0.0072	0.052	0,90	20.5	12.0	0.173	Vacuum Bag
GY70	40x40 Twill (4 ply)	8517 (35)	0.0068	0.051	0,90	25.0	12.3	0.334	Vacuum Bag
GY70	40x40 Twill (6 ply)	8517 (35)	0.0066	0.050	0,90	26.4	12.6	0.499	Vacuum Bag
GY70	40x40 Twill (2 ply)	8517 (30)	0.0061	0.0455	0,90	32.8	14.0	0.171	Autoclave
GY70	40x40 Twill (4 ply)	8517 (30)	0.0059	0.044	0,90	28.0	14.8	0.350	Autoclave
GY70	40x40 Twill (6 ply)	8517 (30)	0.0057	0.042	0,90	28.5	15.8	0.540	Autoclave
GY70 Plus Kevlar 120	40x40 Twill (1 ply) 34x34 (1 ply)	8517 (35)	0.011 Total	0.075 Total	0,90 0,90	21.0	8.0	0.088	Vacuum Bag