General Disclaimer

One or more of the Following Statements may affect this Document

- This document has been reproduced from the best copy furnished by the organizational source. It is being released in the interest of making available as much information as possible.

- This document may contain data, which exceeds the sheet parameters. It was furnished in this condition by the organizational source and is the best copy available.

- This document may contain tone-on-tone or color graphs, charts and/or pictures, which have been reproduced in black and white.

- This document is paginated as submitted by the original source.

- Portions of this document are not fully legible due to the historical nature of some of the material. However, it is the best reproduction available from the original submission.

Produced by the NASA Center for Aerospace Information (CASI)

NASA Technical Memorandum 79098

RESULTS OF THIN-ROUTE SATELLITE COMMUNICATION SYSTEM ANALYSES INCLUDING ESTIMATED SERVICE COSTS

(NASA-TM-79098) RESULTS OF THIN-ROUTE SATELLITE COMMUNICATION SYSTEM ANALYSES INCLUDING ESTIMATED SERVICE COSTS (NASA) 12 p HC A02/MF A01 CSCL 17B

N79-20300

Unclas

G3/32 17063

David L. Wright
Lewis Research Center
Cleveland, Ohio

APR 1979
RECEIVED
NASA STI FACILITY
ACCESS DEPT.

TECHNICAL PAPER to be presented at the
International Telecommunication Exposition
Dallas, Texas, February 26-March 2, 1979

RESULTS OF THIN-ROUTE SATELLITE COMMUNICATION SYSTEM ANALYSES INCLUDING ESTIMATED SERVICE COSTS+

ORIGINAL PAGE IS OF POOR QUALITY

David L. Wright
NASA-Lewis Research Center
Cleveland, Ohio

+ The work effort which supports this paper was performed by Fairchild Space and Electronics Company under Contract NAS3-20364 with NASA-Lewis Research Center, Cleveland, Ohio.

ABSTRACT

Despite an abundance of advanced technology and one of the highest living standards in the world, there remain areas, communities and individuals within the United States having no access to modern telephone service. The application of recent advances in satellite communications technology offers what appears to be the most economically attractive means of meeting this need. Typically, the isolated users are located in Alaska, the Rocky Mountain region, as well as parts of Appalachia and the great Southwest. The modest size and isolation of these locations requires that either a direct-to-the-user service or a community service involving a limited number of voice channels must be supplied.

This paper addresses a variety of cost and performance tradeoffs and presents the preliminary design of a communications satellite system capable of meeting isolated rural users' needs. Small inexpensive rural earth stations are linked via the satellite to a nationwide network of larger earth stations which are, in turn, interconnected to the switching exchanges of the conventional telephone network. Optimum earth station EIRP and G/T and satellite transponder power are defined as a function of a wide variety of system options.

INTRODUCTION

Background

Despite an abundance of advanced technology and one of the highest living standards in the world, there remain areas, communities, and individuals within the United States which have no access to modern telephone service. Typically, the isolated users are located in Alaska, the Rocky Mountain region, parts of Appalachia and the great Southwest. The difficulty of providing economical telephone service results from the remoteness of the regions and the sparcity of population within the regions. The application of recent advances in satellite communications technology offers what appears to be the most economically attractive means of meeting this need.

The feasibility of direct satellite service to small users has been demonstrated in a wide variety of applications in the ATS-6 and CTS programs. TV, voice, and data experiments in both broadcast and interactive configurations have been successfully developed and conducted. These systems were characterized by either a relatively large spacecraft antenna (30 feet in diameter) or a high power spacecraft transmitter (200 watts), and relatively small ground terminals (2-10 feet in diameter). Future systems may extensively use multiple beam space antennas to further reduce the size of ground terminals and to provide for spectrum re-use.

The objective of this paper is to determine optimum satellite and terrestrial system architectures and parameters to provide the most economical telephone service to vast and remote areas of the United States, to determine the service costs as they would pertain to a common carrier for these optimized systems, and to roughly compare the costs to similar services in the existing terrestrial system.

APPROACH

The approach to developing the results in the report can be segmented into four major areas: (1) satellite system modelling, (2) ground station modelling, (3) terrestrial telephone equipment, and (4) system tradeoffs. The basic system configuration is shown in Figure 1. The rural user accesses the system through the Rural Earth Station (RES). The RES accesses a Network Earth Station (NES) through the satellite. The NES accesses the Telephone Company Network (TELCO) through terrestrial interconnect trunks.

Satellite System Modelling

A typical satellite transponder configuration is shown in Figure 2. In this figure, multiple beams using UHF frequencies are utilized to cover the remote rural areas, and a single Ku-band beam is used to cover the network earth stations. The UHF frequency for the rural areas was selected (in spite of the fact that the band is presently not allocated for this service) because of the low cost and existence of UHF user equipment. In addition to the above frequency selection, Ku-band in the rural area with C-band at the network earth stations is also considered in this paper.

In any communication system, the transmitter and receiver must be sized according to the RF link equation, the signal characteristics, the desired signal quality, and the margin required. As the transmitter power is increased, the receiver figure of merit (G/T) can be decreased when the remaining parameters are constant. As the satellite effective isotropic radiated power (EIRP) increases, the cost of the space segment increases; however, the ground station G/T and cost decreases. The EIRP in the satellite is considered to be optimum when the total space and ground cost is a minimum. The satellite costs in this report are determined as they were in the communications systems technology assessment study [1]. The annual cost of satellite EIRP per beam for a typical case is shown in Figure 3.

Ground Station Modelling

The ground stations consist of both rural earth stations and network earth stations. A typical RES is shown in Figure 4. The terrestrial interface equipment shown in this figure connects directly to the rural users telephone when the RES is located at the user's premises. It includes a duplex mobile radio station per telephone circuit when more than one user per RES exists and the RES cannot be located at the user's premises. The RES values for G/T were varied in conjunction with the satellite EIRP as previously mentioned

ORIGINAL PAGE IS
OF POOR QUALITY

and the optimum values which minimized the total system cost were used in the determination of the telephone service costs. A listing of the various items contained in a typical RES including the cost of the items is shown in Figure 5. The number of users per RES ranges from 1-100 in this paper. It should also be pointed out that the mobile radios can be used for intra-community telephone service when more than one user per RES exists.

The network earth stations are much more complex than the RES. The NES provide telephone signalling, trunk monitoring, processing, control, and billing, in addition to providing the RF link from the TELCO interface to the satellite. If only one NES is utilized in the system, the equipment in that NES is redundant. The number of NES's were also optimized to minimize the total telephone service cost to the user. As more and more NES's are included in the system, the likelihood that a call to or from a rural user involves a long distance circuit between NES and a non-rural user diminishes. Thus, the cost of the call for TELCO long distance charges decreases. However, the cost for NES facilities increases. When the cost of the following equipment in NES was considered:

- Telephone channel units
- Channel unit interface equipment
- RF equipment (NES to satellite)
- Common equipment (pilot receivers, time and frequency units, etc.)
- Operation and maintenance
- NES/TELCO interconnect trunks

and the cost of TELCO long distance charges were estimated, the optimum number of NES's were obtained for various numbers of total rural users and the results are given in Figure 6. The optimum number of NES's range from 1-100 in this report depending on the number of rural users in the system.

SYSTEM TRADEOFFS

Satellite/Ground Terminal Optimization

The transmit/receive system optimization for each system configuration considered was performed by minimizing the system cost for each configuration while satisfying the link performance equation. The optimization methodology is described in the Communications Systems Technology Assessment Study which was conducted by Fairchild Space and Electronics Company for NASA[1]. For each network configuration, a large number of combinations of satellite EIRP, ground terminal receiver G/T, and ground terminal transmitter power which met the link performance requirements were systematically scanned and the cost per user evaluated. The optimum system in each configuration is defined as the one with the minimum cost per user. It should be noted that the network earth stations were not a part of the satellite/ground terminal optimization. This is justifiable because the limited number of NES require only a small amount of RF equipment in comparison with the rest of the system. Furthermore, the RF parameters used for the NES/satellite side of the link were selected in accordance with appropriate results of Reference 1. In order to further minimize an already complex optimization problem, the uplink power on the RES/satellite link was not directly optimized. It was determined by making the values in the uplink equation consistent with the optimized parameters obtained for the RES/satellite downlink equation. This is also justifiable from the results of Reference 1 which revealed that the results for the optimized uplink parameters of typical interactive systems nominally do not depend upon whether the uplink and downlink are simultaneously optimized or whether the downlink is optimized and the uplink is chosen to be consistent with the downlink values, as long as the spacecraft system noise temperatures are reasonably low ($\leq 1000^{o}K$).

Ku-Band System Optimized Results

The optimum key system parameters and annual cost/user for the Ku-band RF satellite and RES equipment is given in Figure 7. For this case, the RES/satellite uplink and downlink are at Ku-band. In order to obtain sufficient spectrum capacity for large user configurations with few satellite beams, it was necessary to use C-band for the NES/satellite uplink and downlink.

UHF System Optimized Results

The optimum key system parameters and annual cost/user for the UHF RF satellite and RES equipment is given in Figure 8. In order to obtain sufficient spectrum capacity for large user configurations, it was necessary to use extensive frequency re-use with multiple satellite beams, and to use a different frequency band for the NES/satellite uplink and downlink; Ku-band was selected.

RESULTS

When the optimized costs for the RES/satellite RF equipment, as given in Figures 7 and 8, are added to the costs for the RES fixed costs, as given in Figure 5, and the NES/TELCO costs, as given in Figure 6, the total annualized cost per user is obtained. These results have been used to generate Figure 9 which shows the cost per month for intracommunity service where applicable (for the case of one user per rural earth station, no mobile radio equipment is required for the local subscriber loop and, thus, no intracommunity service is possible). Figure 9 also shows the cost per call for: (1) rural-to-TELCO local, (2) rural-to-TELCO remote, and (3) rural-to-rural. It should be noted that the cost of a rural-to-rural call is twice the cost of a rural-to-TELCO local call since it requires double-hopping through the satellite and is basically equivalent to two rural-to-TELCO local calls. Also, the calls can originate at the TELCO user as well as the rural user.

The assumptions which were used to generate Figure 9 are as follows:

(1) The yearly rate for the intracommunity service is based upon ½ of the annualized cost for the mobile radio equipment in the subscriber loops.

(2) One-half of the calls originate at the TELCO users and are paid for by them.

(3) The rural users generate and pay for 15 calls per month of 5-minute duration.

The long distance charge for a rural-to-TELCO remote call is the result of the TELCO user not being located within the local exchange which is connected to the NES handling the call. The cost of these long distance charges was determined statistically and was a factor in determining the optimum number of NES's for a given configuration, as previously mentioned.

From Figure 9, several significant results can be observed:

(1) There is no significant difference between the total service costs of corresponding Ku-band and UHF RES/satellite RF configurations.

(2) The most important factor in reducing service cost is economy of scale. This is true for the number of users per RES and for the total number of users, and is the result of lower cost per unit based upon volume and more extensive sharing of common equipment. The cost goes from $31.20/call for 1 user per RES and 10^3 users to $1.30/call for 100 users per RES and 1.8×10^6 users.

(3) The cost per call in the larger rural configurations compares favorably with the cost per call in the existing TELCO system. The present long distance rates in the United States are nominally $2.60 per 10 minutes which compares directly with $1.30 per 5 minutes in configurations 7 and 13. Moreover, several of the medium-sized configurations (10^5 users) rates do not seem unreasonable considering the remoteness of the regions to be served.

(4) The monthly rate for intracommunity service is comparable to the monthly rates paid by TELCO users.

(5) The effect of multiple spot beams was primarily an increase in available useable spectrum. The cost reduction due to spot beams was small as can be seen by comparing configuration 6 and 7 in Figures 7 and 9.

Many other configurations were run in this study to determine the effect of multiple spot beams, outage, signal quality, modulation method, satellite accessing method, and forward error correction on total service cost. It is beyond the scope of this paper to discuss these results in detail; however, the effect of these parameters on service cost are insignificant compared to economy of scale.

Also, the sensitivity of the various optimum parameters of the many configurations to service cost was determined. In general, the cost optimization curves had fairly broad minimum regions; this was especially true of the systems with a small number of users. However, the systems with a large number of users would incur a 10% increase in service cost when a system parameter such as ground station G/T was 2-3 db/^{o}K from optimum.

CONCLUSIONS

Several configurations for an isolated rural telephone system, which covers the 48 states plus Alaska, using satellites was considered. Both direct-to-the-user and community-type of systems were evaluated using both UHF and Ku-band RF equipment for the rural/satellite links. Also, the effect of multiple spot beams, outage, signal quality, modulation method, satellite accessing, forward error correction and the number of users were evaluated. It can be concluded that economy of scale, or the number of users, is by far the most important variable considered.

The developed service costs for many of the configurations considered for both long distance and intracommunity service are competitive with the existing telephone system in the United States, especially for systems with more than 10^5 users. The total cost for a 5-minute call from an isolated rural user to a TELCO user was as low as $1.30 for a system with 1.8×10^6 rural users.

REFERENCES

(1) R.L. Kelley, R.K. Khatri, J.D. Kiesling, and J.A. Weiss, "Communications Systems Technology Assessment. (NASA Contract Number NAS3-20364, Contract Report Number 135224.)

ORIGINAL PAGE IS OF POOR QUALITY

MAJOR RURAL SATELLITE TELEPHONE NETWORK COMPONENTS

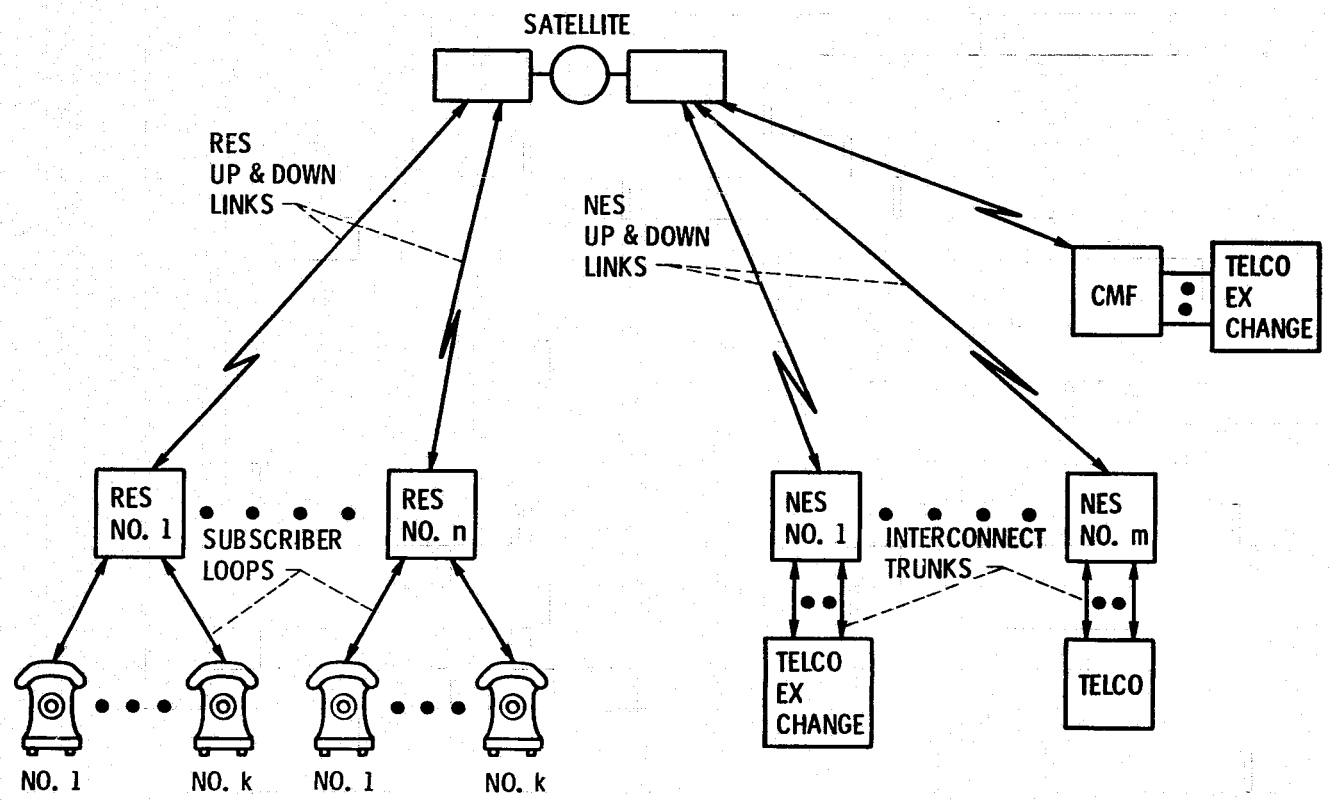

NES - NETWORK EARTH STATION
RES - RURAL EARTH STATION
CMF - COMMUNICATION MANAGEMENT FACILITY
TELCO - TELEPHONE COMPANY

CS-79-698

Figure 1.

SATELLITE MODEL

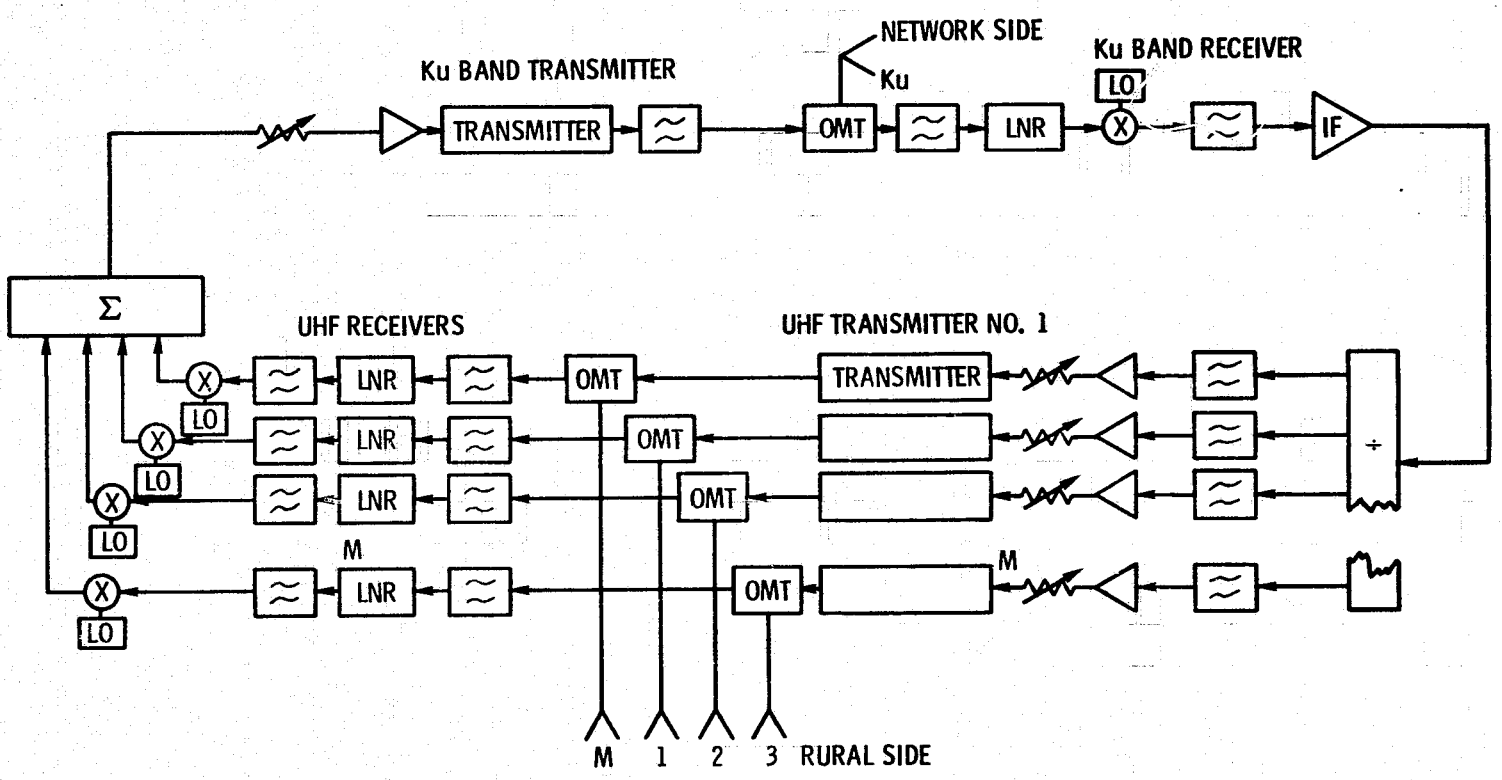

NOTE: MODEL SHOWS Ku-BAND ON NETWORK SIDE AND UHF BAND ON RURAL SIDE. CS-79-697

Figure 2.

SATELLITE COST/PERFORMANCE

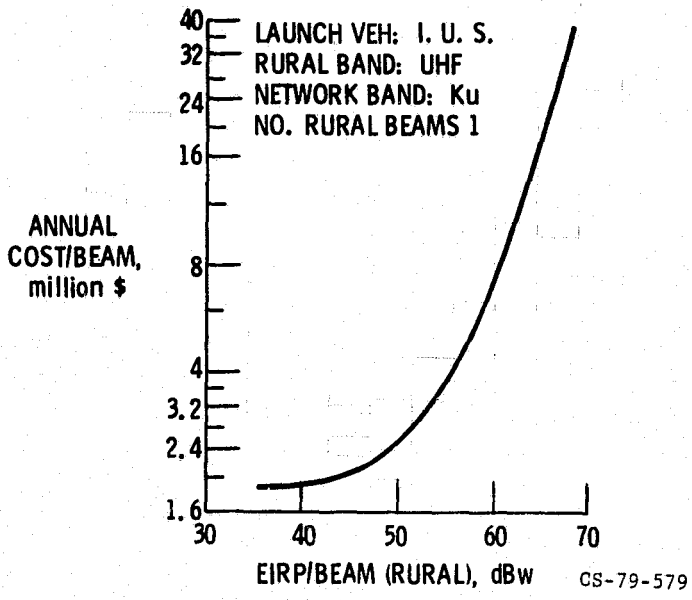

Figure 3.

RURAL EARTH STATION (RES) CONFIGURATION

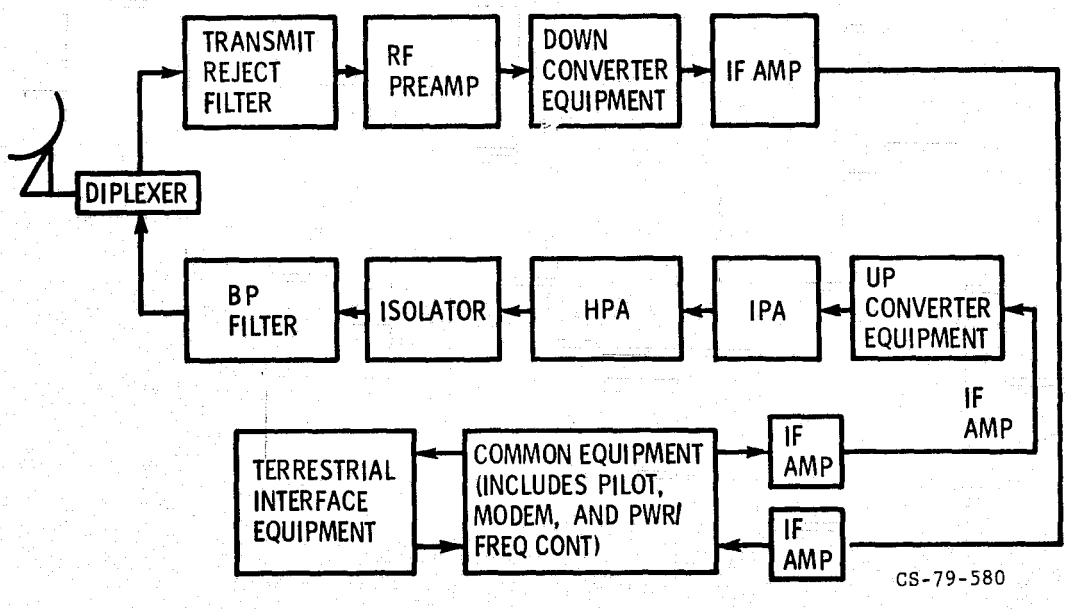

Figure 4.

RES FIXED EQUIPMENT COSTS

($\$ \times 10^3$)(6 VOICE CHANNELS, 1.78×10^4 RES'S)

	NO. OF ITEMS PER RES	BUY SIZE	COST/UNIT	TOTAL RES COST	INSTALLED COST
SUB. RADIO	100	10^5	0.491	49.1	49.10
SUB ANT.	100	10^5	.0204	2.04	2.04
RES ANT	1	10^3	.032	.032	.0384
RES VHF RADIO	6	10^4	1.024	6.144	7.373
TEL SIG AND CONV.	6	10^4	.061	.366	.439
RES CH UNITS	6	10^4	4.0	24.0	28.80
DAMA CONT.	1	10^3	.854	.854	1.025
DAMA SOFT	$1/1.78 \times 10^4$	1	75.0	.0004	.0005
RES RADIO INT.	6	10^4	.015	.09	.108
CONT/CU INT.	6	10^4	.018	.108	.130
CU/IF INT.	6	10^4	.009	.054	.065
IF/CU INT.	6	10^4	.061	.366	.439
CU AFC	0	0	0	0	0
PILOT	1	10^3	6.1	6.1	7.32
TIME AND FREQ.	1	10^3	4.9	4.9	5.88
TIME AND FREQ. INT.	6	10^4	.018	.108	.130
UP CONV.	1	10^3	1.8	1.8	2.16

TOTAL ACQUISITION COSTS	105.04
INITIAL COST/USER	1.05
ANNUAL COST/USER	0.365

CS-79-581

Figure 5.

TOTAL ANNUAL SYSTEM COST FOR NESs

NUMBER USERS	OPTIMUM NUMBER NESs	TELCO INTERFACE COST	
		TOTAL	COST PER RURAL USER*
10^3	1	1.38×10^6	690
10^5	50	42.6×10^6	213
1.78×10^6	100	498.5×10^6	140

*RURAL USER ONLY PAYS 1/2 OF ANNUALIZED COSTS.

Figure 6.

CS-79-578

RES/SATELLITE OPTIMUM RF SYSTEM PARAMETERS WITH COSTS - Ku-BAND

CONFIGURATION NUMBER	VOICE CHANNELS PER RES	NUMBER OF RES	NUMBER OF USERS	NUMBER OF SAT. BEAMS	SAT. PWR. PER BEAM (WATTS)	RES G/T (dB/°K)	RES ANT. DIAM. (METERS)	RES TRANS. POWER (WATTS)	RES REC. TEMP. (°K)	ANNUAL COST OF RF SAT. & RES OPTIMIZED EQ. PER USER ($)
1+	1	10^3	10^3	2	14	14	2.3	0.25	1950	6900
2+	1	10^5	10^5	2	690	15	2.2	0.25	1540	1490
3+	2	10^2	10^3	1	2.5	22	3.5	0.29	750	4760
4+	2	10^4	10^5	1	224	20	2.3	0.65	460	400
5*	2	1.8×10^5	1.8×10^6	1	2630	19	2.2	0.72	590	220
6*	6	1.8×10^4	1.8×10^6	2	830	24	4.0	1.55	590	54
7*	6	1.8×10^4	1.8×10^6	25	13	13	2.1	0.09	1950.	33

MODULATION - QPSK, 32 KBPS Δ MODULATION, FORWARD ERROR CORRECTION

OUTAGE - 0.1%

LAUNCH VEHICLE - +3914 S.S.U.S., *I.U.S.

CS-79-583

Figure 7.

RES/SATELLITE OPTIMUM RF SYSTEM PARAMETERS WITH COSTS - UHF

CONFIGURATION NUMBER	VOICE CHANNELS PER RES	NUMBER OF RES	NUMBER OF USERS	NUMBER OF SAT. BEAMS	SAT. PWR. PER BEAM (WATTS)	RES G/T (dB/°K)	RES. ANT. DIAM. (METERS)	RES TRANS. POWER (WATTS)	RES REC. TEMP. (°K)	ANNUAL COST OF RF SAT.& RES OPTIMIZED EQ. ($)
8+	1	10^3	10^3	1	1.8	-5.6	2.0	0.07	350	5840
9+	1	10^5	10^5	1	110	-5.5	2.0	0.07	350	190
10+	2	10^2	10^3	1	1.3	-3.5	2.5	0.12	350	5660
11*	2	10^4	10^5	1	56	-2.5	2.8	0.10	350	58
12*	2	1.8×10^5	1.8×10^6	50	0.7	-5.5	2.0	0.003	400	26
13*	6	1.8×10^4	1.8×10^6	50	1.0	-7.5	2.0	0.02	590	20

MODULATION - QPSK, 32 KBPS Δ MODULATION, FORWARD ERROR CORRECTION

LAUNCH VEHICLE - +3914 S.S.U.S., * I.U.S.

CS-79-584

Figure 8.

TOTAL COST PER RURAL USER FOR VARIOUS KINDS OF SERVICE ($)

CONFIGURATION NUMBER	RES UPLINK FREQUENCY BAND	VOICE CHANNELS PER RES	NUMBER OF USERS	MONTHLY RATE FOR INTRACOMMUNITY SERVICE PER RURAL USER ($)	LONG DISTANCE COST PER CALL		
					RURAL TO TELCO (LOCAL)	RURAL TO TELCO (REMOTE)	RURAL TO RURAL
1	Ku	1	10^3	N/A	31.20	32.60	62.30
2		1	10^5	N/A	11.70	12.20	23.50
3		2	10^3	14	18.70	20.20	37.50
4		2	10^5	9	3.90	4.40	7.90
5		2	1.8×10^6	7	2.90	3.20	5.70
6		6	1.8×10^6	7	1.40	1.70	2.80
7	Ku	6	1.8×10^6	7	1.30	1.70	2.70
8	UHF	1	10^3	N/A	28.20	29.60	56.40
9		1	10^5	N/A	8.10	8.60	16.20
10		2	10^3	14	21.20	22.70	42.50
11		2	10^5	9	3.00	3.50	6.00
12		2	1.8×10^6	7	2.30	2.70	4.70
13	UHF	6	1.8×10^6	7	1.30	1.60	2.60

CS-79-582

Figure 9.