General Disclaimer

One or more of the Following Statements may affect this Document

- This document has been reproduced from the best copy furnished by the organizational source. It is being released in the interest of making available as much information as possible.

- This document may contain data, which exceeds the sheet parameters. It was furnished in this condition by the organizational source and is the best copy available.

- This document may contain tone-on-tone or color graphs, charts and/or pictures, which have been reproduced in black and white.

- This document is paginated as submitted by the original source.

- Portions of this document are not fully legible due to the historical nature of some of the material. However, it is the best reproduction available from the original submission.

Produced by the NASA Center for Aerospace Information (CASI)

Outer Satellite Atmospheres: Their Nature and Planetary Interactions

(NASA-CR-158482) OUTER SATELLITE ATMOSPHERES: THEIR NATURE AND PLANETARY INTERACTIONS Final Report, Jun. - Dec. 1978 (Atmospheric and Environmental Research) 83 p HC A05/MF A01 CSCL 03B G3/91

N79-21979

Unclas 15339

William H. Smyth

Atmospheric and Environmental Research, Inc.
872 Massachusetts Avenue
Cambridge, Massachusetts 02139

December 1978
Final Report for Period June 1978 to December 1978

Prepared for
NASA Headquarters

PREFACE

Exploratory modeling is presented for likely existing extended hydrogen atmospheres of the outer satellites Amalthea, Ganymede, Callisto and Titan. Primary emphasis is placed upon describing the spatial structure and Lyman-α intensity of these extended satellite atmospheres for a range of probable hydrogen atom emission and lifetime conditions. The likelyhood of detection of these extended atmospheres by the Voyager and Pioneer 11 spacecrafts is assessed. The initial spatial distribution of the ions created by atoms lost from these extended hydrogen atmospheres and from the extended sodium atmosphere of Io, because of ionization processes, is also presented.

The present study provides a valuable introduction and theoretical description of extended satellite atmospheres, in addition to presenting many interesting and useful exploratory and prototype model calculations. Data for extended satellite atmospheres, obtained from both earth based observations and spacecraft measurements, can be analyzed to yield important information about the outer satellites and their planetary interactions. Specific information can be deduced about the nature of the local satellite atmospheres, the character of the electromagnetic interaction of satellites with their planetary magnetospheres, and the energy density and spatial distribution of charged particles in the magnetospheres. At present very

little data for extended hydrogen atmospheres has been accumulated. In anticipation of data to be obtained in the near future, exploratory modeling has been undertaken.

Exploratory modeling results for most probable atom emission and lifetime conditions indicate that the extended hydrogen atmosphere of Amalthea should form a tightly-bound partial toroidal-shaped cloud about its planet. In contrast, Ganymede, Callisto and Titan should form rather large, complete and nearly symmetric toroidal-shaped clouds. The partial toroidal hydrogen cloud of Amalthea, tentatively detected by the UV instrument aboard the Pioneer 10 spacecraft, could be explained if the satellite atom escape flux were of order 10^{11} $cm^{-2}sec^{-1}$. Model results suggest that the Voyager spacecraft should be able to detect the Lyman-α emission from the extended hydrogen clouds of Ganymede, Callisto and Titan, assuming the most probable atom emission and lifetime conditions. The Pioneer 11 spacecraft should also be able to detect the hydrogen cloud of Titan. Voyager detection of the Ganymede and Titan clouds under less favorable conditions is also possible.

TABLE OF CONTENTS

		Page
Front Cover		
Title Page		
Preface		ii
Table of Contents		iii
List of Figures		v
List of Tables		vii
Chapter I	Introduction	ix
Chapter II	Observational Evidence for Extended Satellite Atmospheres	1
	2.1 Extended Hydrogen Atmospheres	5
	2.2 Sodium Cloud of Io	5
Chapter III	Models for Extended Satellite Atmospheres	12
	3.1 Physical Description of Extended Satellite Atmospheres	14
	3.1.1 Angular Extent of the Toroidal Clouds	14
	3.1.2 Vertical Extent of the Toroidal Clouds	15
	3.1.3 Radial Extent of the Toroidal Clouds	29
	3.2 Estimated Spatial Extent of the Extended Hydrogen Atmospheres	29
	3.2.1 Emission Conditions	30
	3.2.2 Spatial Extent Estimates	31
	3.3 Cloud Model	32
Chapter IV	Modeling Results	35
	4.1 Introduction	36
	4.2 Exploratory Modeling of Extended Hydrogen Atmospheres	36
	4.2.1 Results for Amalthea	37
	4.2.2 Results from Ganymede	37
	4.2.3 Results for Callisto	41
	4.2.4 Results for Titan	53
	4.3 Ion Sources Created by Extended Satellite Atmospheres	56
	4.3.1 Proton Sources	61
	4.3.2 Sodium Ion Source	61
	4.4 Modeling Io's Sodium Line Profile Data	66
		67

Chapter V Concluding Remarks 70

References 73

LIST OF FIGURES

		Page
Figure 1.	Creation of an Extended Satellite Atmosphere	2
Figure 2.	Ballistic and Escape Orbits of Atoms Emitted from Ganymede	17
Figure 3.	Forward and Backward Angular Diffusion Velocities about Jupiter of the Gas Cloud Emitted by Amalthea	19
Figure 4.	Forward and Backward Angular Diffusion Velocities about Jupiter of the Gas Cloud Emitted by Io	20
Figure 5.	Forward and Backward Angular Diffusion Velocities about Jupiter of the Gas Cloud Emitted by Europa	21
Figure 6.	Forward and Backward Angular Diffusion Velocities about Jupiter of the Gas Clouds Emitted by Ganymede	22
Figure 7.	Forward and Backward Angular Diffusion Velocities about Jupiter of the Gas Clouds Emitted by Callisto	23
Figure 8.	Forward and Backward Angular Diffusion Velocities about Saturn of the Gas Clouds Emitted by Titan	24
Figure 9.	Time Development of the H Atom Toroidal Cloud in Ganymede's Orbital Plane	27
Figure 10.	Time Development of the H_2 Molecular Toroidal Cloud in Ganymede's Orbital Plane	28
Figure 11.	Model for the Extended Hydrogen Atmosphere of Amalthea	39
Figure 12.	Lyman-α Radiation from Amalthea's Extended Hydrogen Atmosphere	40
Figure 13.	Model for the Extended Hydrogen Atmosphere of Amalthea	42
Figure 14.	Lyman-α Radiation from Amalthea's Extended Hydrogen Atmosphere	43
Figure 15.	Cloud Dynamics for the Extended Hydrogen Atmosphere of Ganymede	44

		Page
Figure 16.	Cloud Dynamics for the Extended Hydrogen Atmosphere of Ganymede	45
Figure 17.	Cloud Dynamics for the Extended Hydrogen Atmosphere of Ganymede	46
Figure 18.	Cloud Dynamics for the Extended Hydrogen Atmosphere of Ganymede	47
Figure 19.	Cloud Dynamics for the Extended Hydrogen Atmosphere of Ganymede	48
Figure 20.	Lyman-α Radiation from Ganymede's Extended Hydrogen Atmosphere	50
Figure 21.	Lyman-α Radiation for Ganymede's Extended Hydrogen Atmosphere	51
Figure 22.	Lyman-α Radiation for Ganymede's Extended Hydrogen Atmosphere	52
Figure 23.	Model for the Extended Hydrogen Atmosphere of Callisto	54
Figure 24.	Lyman-α Radiation for Callisto's Extended Hydrogen Atmosphere	55
Figure 25.	Model for the Extended Hydrogen Atmosphere of Titan	58
Figure 26.	Lyman-α Radiation from Titan's Extended Hydrogen Atmosphere	59
Figure 27.	Lyman-α Radiation from Titan's Extended Hydrogen Atmosphere	60
Figure 28.	Lyman-α Radiation from Titan's Extended Hydrogen Atmosphere	62
Figure 29.	Satellite Proton Source	64
Figure 30.	Satellite Proton Source for Titan	65
Figure 31.	Satellite Sodium Ion Source for Io	68

LIST OF TABLES

		Page
Table 1.	Summary of Information on the Existance of Extended Satellite Atmospheres	6
Table 2.	Hydrogen Toroidal Clouds Detected by the UV Photometer of Pioneer 10	7
Table 3.	Escape Flux of Hydrogen Atoms from the Outer Satellites	9
Table 4.	Estimated Lifetime of Hydrogen Atoms in the Extended Satellite Atmospheres	11
Table 5.	Physical and Orbital Properties of the Outer Satellites	16
Table 6.	Angular Diffusion Times τ_F^D and τ_B^D for Outer Satellite Clouds	26
Table 7.	Estimated Forward and Backward Angular Extend of the Hydrogen Toroidal Clouds	33
Table 8.	Estimated Vertical and Radial Extent of the Hydrogen Toroidal Clouds	34

CHAPTER I

INTRODUCTION

Interest in understanding the atmospheres of the outer satellites, their extended nature and their planetary interactions, has grown significantly in recent years. Both earth based astronomy and spacecraft measurements have made important contributions. These measurements and others to be obtained in the near future from the Pioneer, Voyager and Galileo spacecraft missions, provide a sufficiently broad data base to seriously constrain theoretical models and to facilitate definite physical interpretation. In this report, modeling focused primarily upon providing a framework for understanding the extended nature of outer satellite atmospheres is presented and applied to several satellites of Jupiter and Saturn.

The concept of an extended satellite atmosphere is relatively new and deserves some introductory comments. Briefly, an extended satellite atmosphere is that part of a satellite atmosphere which extends spatially beyond the gravitational control of the satellite. This situation is illustrated in Figure 1. Here is depicted a satellite, surrounded by a local or bound atmosphere, and the satellite's gravitational sphere of influence. Inside this sphere of influence, the satellite exerts more gravitational control over atmospheric gases than does its parent planet. If a gravitational escape mechanism exists, which is sufficiently energetic to allow at least some atmospheric gases to escape the sphere, an extended satellite atmosphere is created. Because of the relatively

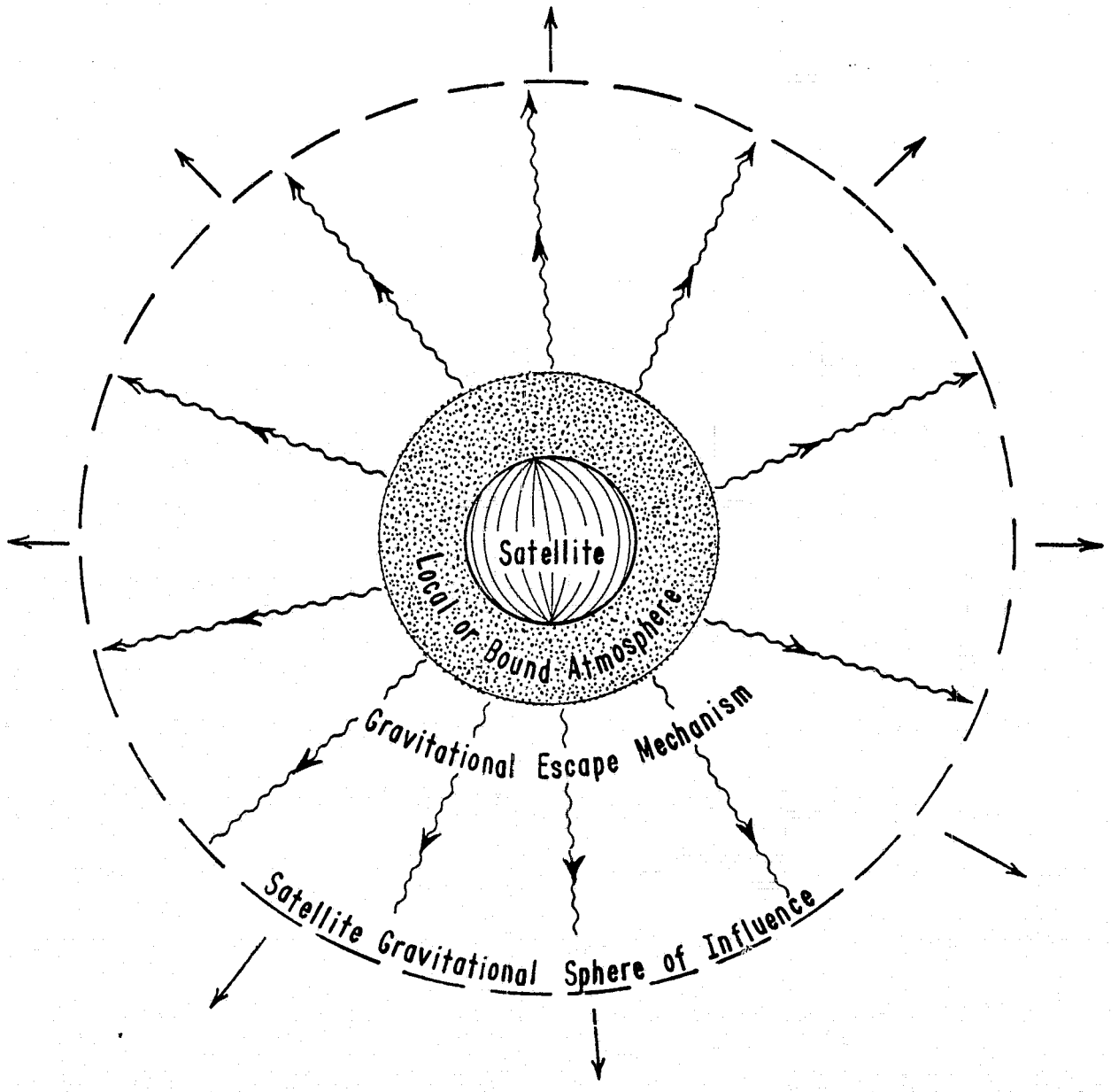

Figure 1

Creation of an Extended Satellite Atmosphere.
See the text for discussion.

small escape velocities of the outer satellites (between 2 and 3 km/sec), such gravitational escape of satellite gases is not unlikely.

Gases entering the extended atmosphere in this manner are basically collisionless and follow individual trajectories in the circumplanetary space. The spatial volume filled by the extended atmosphere depends upon the emerging atom velocities and the survival lifetime of these atoms in the planetary environment. Cloud atoms are lost from the extended atmosphere upon ionization. For short lifetimes, gases will be relatively confined to the near satellite environment, filling only a partial toroidal-shaped volume. For long lifetimes, however, gases will fill a complete toroidal-shaped volume, extending all the way around the central planet.

Major emphasis in this report has been placed upon providing exploratory and prototype models for extended hydrogen atmospheres of outer satellites which are likely to exist and be discovered by the Pioneer, Voyager and Galileo outer planetary missions of NASA. Observational evidence for extended outer satellite atmospheres is reviewed in Chapter II. A theoretical framework for describing extended atmospheres is presented in Chapter III and the model to be used to calculate its detailed spatial density described. Exploratory modeling results for extended hydrogen atmospheres for the satellites Amalthea, Ganymede, Callisto and Titan are given in Chapter IV. Calculations describing the initial ion sources created by these extended hydrogen atmospheres and by the sodium cloud of Io are also presented. Progress in modeling Io's sodium

line profile data is reported in the last section of Chapter IV. Concluding remarks are given in Chapter V and complete the report.

CHAPTER II

OBSERVATIONAL EVIDENCE FOR EXTENDED SATELLITE ATMOSPHERES

Several satellites in the outer solar system - Amalthea, the four Galilean satellites and Titan - have, or are likely to have, extended atmospheres of gases, forming partial or complete toroidal-shaped clouds about their parent planet. Our present knowledge of the existance of bound and extended atmospheres for these six satellites is summarized in Table 1. Discussion will be directed primarily to extended satellite atmospheres of atomic hydrogen gas needed for prototype and exploratory modeling undertaken in later chapters.

2.1 Extended Hydrogen Atmospheres

Extended hydrogen atmospheres, tentatively detected for Amalthea (JV) and definitely observed for Io (JI) with the ultraviolet instrumentation on the Pioneer 10 spacecraft, are discussed by Judge et al. (1976). The average brightness, approximate vertical thickness and angular extent of these clouds, centered on the satellite and measured along its orbital track, are given in Table 2. Amalthea, with such a small escape velocity, cannot retain an atmosphere even for temperatures as low as ten degrees Kelvin. Io, on the other hand, requires a temperature of several hundred degrees in order for escape of hydrogen to occur.

The other Galilean satellites Europa (JII), Ganymede (JIII) and Callisto (JIV) are also likely candidates for ex-

Table 1 Summary of Information on the Existance of Extended Satellite Atmospheres

Satellite	Escape Velocity (km/sec)	Bound Atmosphere	Extended Atmosphere
Amalthea	0.155	not likely	likely: H(tentative detection)
Io	2.56	yes	yes: H, Na, K
Europa	2.06	probable	yes: O suggested
Ganymede	2.75	probable	likely: O, H, H_2
Callisto	2.39	probable	likely: O, H, H_2
Titan	2.73	yes(CH_4,H_2)	yes: H(tentative detection)

Table 2 Hydrogen Toroidal Clouds Detected by the UV Photometer of Pioneer 10

Satellite	Average Brightness (Rayleighs)	Vertical Thickness (Jupiter Radii)	Orbital Extent (deg)
Amalthea	100	~1	±109
Io	300	~1	± 60

tended hydrogen gas clouds. A source of H atoms may be supplied to the cloud by water, frost or ice, detected on these satellites' surfaces. This might occur through dissociative surface sputtering processes by Jovian magnetospheric particles for the satellite Europa (Wu et al., 1978), or through solar evaporation and photolysis for the satellites Ganymede and Callisto (Yung and McElroy, 1977), followed by gravitational escape. A possible detection of a weak hydrogen cloud for Europa may be present in the more recent reduction of Pioneer 10 ultraviolet photometer data (Wu et al., 1978) using improved procedures, although emission from oxygen atoms may account for the complete signal observed. No such clouds have been detected for Ganymede or Callisto in Pioneer 10 and 11 spacecraft data, although they may well exist, having an intensity below the sensitivity level of the UV instrument.

A hydrogen toroidal cloud for Titan was first suggested by McDonough and Brice (1973) as a possible recycling mechanism to moderate the large amount of hydrogen thought to be escaping the satellite. Estimates of the escape flux for hydrogen have been somewhat reduced by more recent upper limits of the amount of H_2 present in the atmosphere of Titan (Münch et al., 1977), but a modest toroidal cloud of H atoms should still be expected at the satellite orbit. Tentative detection of this hydrogen cloud from the Copernicus satellite has been reported by Barker (1977).

Estimated values of the atomic hydrogen escape flux for each of the six satellites of Table 1 are given in Table 3

Table 3 Escape Flux of Hydrogen Atoms from the Outer Satellites

Satellite	Escape Flux ($cm^{-2}sec^{-1}$)	Comment	Reference
Amalthea	?	possible detection, Pioneer 10 data	Judge et al. (1976)
Io	10^{10}	calculated from Pioneer 10 data	Carlson and Judge (1974)
Europa	$\leq 10^{8}$	estimated from Pioneer 10 data	Wu et al. (1978)
Ganymede	$\sim 5 \times 10^{7}$	plausible model calculation	Yung and McElroy (1977)
Callisto	?	may be similar to Ganymede	–
Titan	10^{9}-4×10^{10}	estimated from limited data	Tabarié (1974)

along with their references. An estimated escape flux for Amalthea is unavailable. Values for Io and Europa are inferred from Pioneer 10 data, whereas values for Ganymede and Titan are estimated from plausible model calculations. A likely upper limit to the hydrogen escape flux for Callisto is provided by the Ganymede value.

Hydrogen atoms escaping the satellites will remain part of the neutral extended atmosphere until ionized and then are swept away by the planetary magnetosphere or by the solar wind. For the five satellites of Jupiter under consideration, change exchange with magnetospheric protons is thought to be the dominant lifetime mechanism for H atoms. Estimated lifetime values for this process are given in Table 4 and are considerably smaller than the H atom photoionization lifetime of about 3-6 x 10^8 sec. For Saturn, no measurements are available for magnetospheric proton fluxes at the orbit of Titan. If the satellite is within the planetary magnetosphere, the one gauss surface field of Saturn implies a proton number density at Titan's orbit of about 1.7 cm^{-3} moving with the co-rotational field speed (Siscoe, 1978). This gives the hydrogen atom lifetime of about 8.4 x 10^6 sec shown in Table 4 and is adopted for latter use. In the less likely event that Titan lies outside the Saturn magnetosphere, solar wind impact ionization and photoionization would result in H atom lifetimes of 2 x 10^8 sec and 1-2 x 10^9 sec respectively.

Table 4 Estimated Lifetime of Hydrogen Atoms in the Extended Satellite Atmospheres

Satellite	Proton Number Density (cm^{-3})	Plasma Temperature (ev)	Proton Flux ($cm^{-2}sec^{-1}$)	Change Exchange Lifetime for H (sec)	(hr)	Plasma Conditions
Amalthea	100	100	1.6×10^9	1.8×10^5	50	Frank et al. (1976)
	≤ 5000 *	2	1×10^{10}	2.5×10^4	7	Brown (1978)
Io	100	100	1.6×10^9	1.8×10^5	50	Frank et al. (1976)
	250	13+	1.4×10^9	2.0×10^5	56	Siscoe (1978)
Europa	12	400	3.8×10^8	7.6×10^5	200	Frank et al. (1976)
Ganymede	1	400	3.1×10^7	9.2×10^6	2500	Frank et al. (1976)
Callisto	1	400	3.1×10^7	9.2×10^6	2500	Frank et al. (1976)
Titan	1.7	164+	3.4×10^7	8.4×10^6	2300	Siscoe (1978)

+ assuming protons co-rotating with the magnetosphere

* value, calculated by Brown for electrons at 3.3 Jupiter radii, is assumed for protons at Amalthea's orbit (2.54 Jupiter radius) as an upper limit value.

2.2 Sodium Cloud of Io

In addition to the hydrogen atoms, Io has extended atmospheres of sodium and potassium atoms, both detected from ground based observations. Diverse observations of the sodium cloud since its discovery (Brown, 1974) have produced a large and rapidly growing data base, sufficiently broad to seriously constrain theoretical models and to facilitate definite physical interpretation. The potassium cloud, in contrast, was discovered more recently (Trafton, 1975; Trarger et al., 1976; Münch et al., 1976). To date, very little data has been acquired and interpretative modeling is not yet warranted.

Observations of the sodium cloud basically are of two types, (1) spatial cloud data, describing the intensity of the sodium D-line emission in the vicinity of Io and (2) line profile data, giving the doppler signiture of the emitting cloud atoms near the satellite. Data of the first type has been successfully modeled by Smyth and McElroy (1978) who compared their model calculations with the set of observed two-dimensional images reported by Murcray and Goody (1978). These results suggest that sodium atoms originate from the inner hemisphere of Io with an average flux of about 10^8 atoms cm^{-2} sec^{-1} and an initial mean velocity of 2.6 km sec^{-1}. Atoms appear to be removed from the cloud by electron impact ionization with an effective lifetime of between 15 and 20 hours. Data of the second type, the line profile observations, has received less attention. Preliminary modeling efforts (Carlson et al., 1978; Smyth and McElroy, 1977) need to be

continued and a comprehensive program undertaken. Our development of such a modeling program is already in progress and will be discussed in a later chapter.

CHAPTER III

MODELS FOR EXTENDED SATELLITE ATMOSPHERES

A comprehensive physical description for extended satellite atmospheres is presented in this chapter. A simple theory, useful in initially estimating the spatial size of extended satellite gas clouds, is summarized and contrasted with a more exact physical description used in our cloud model. The simple theory is applied to the one existing and five likely existing hydrogen atmospheres discussed in the previous chapter and overall spatial dimensions of these clouds are estimated. A brief description of the cloud model, capable of calculating the detailed intensity and density variations or line profile shapes of extended satellite atmospheres, is then presented.

3.1 Physical Description of Extended Satellite Atmospheres

The atmosphere of an outer satellite may be divided into two parts: a portion that is gravitationally bound to the satellite and a portion that is gravitationally unbound, the so-called extended satellite atmosphere. The spatial boundary between these two portions of the atmosphere occurs where the gravitational force fields of the planet and satellite on an atom are comparable. The surface is effectively a sphere centered on the satellite with a radius r_L equal to the distance between the satellite and the near collinear Lagrange point. An approximate expression for the Lagrange radius is

$$r_L = a \left[\frac{\mu}{3(1-\mu)} \right]^{1/3} \qquad (3.1.1)$$

where a is the orbital radius of the satellite and μ is the ratio of the satellite mass to the sum of the planet and satellite masses. Values of r_L as well as several other orbital and physical properties of the six outer satellites are given in Table 5.

An atom emitted from the surface or exosphere of a satellite will be confined to the Lagrange sphere unless it has a velocity nearly equal to the satellite escape velocity (see Table 5 for values). The situation, including the effect of Jupiter gravitational field, is illustrated in Figure 2 for Ganymede, where an atom orbit, initially emitted from the exosphere, is shown as a function of increasing initial velocity. The escape velocity is reduced from 2.6 km/sec, the two-body value, to about 2.45 km/sec because of the gravitational attraction of Jupiter.

3.1.1 Angular Extent of the Toroidal Clouds

The orbital path of atoms escaping the Lagrange sphere will be controlled largely by the gravity of the planet. Those escaping atom orbits with initial emission velocities less than about v_s $(\sqrt{2} - 1)$, where v_s is the orbital speed of the satellite (see Table 5), will have elliptical orbits about the planet. For isotropic emission of many such orbits, atoms will diffuse both ahead and behind the satellite. An approx-

Table 5 Physical and Orbital Properties of the Outer Satellites

Satellite	Satellite Radius (km)	Orbital Radius (10^5 km)	Orbital Speed (km/sec)	Orbital Period (hr)	Satellite Mass+ (10^{22} kg)	Lagrange Radius r_L (km)	Lagrange Radius r_L (Satellite radii)	Exosphere Radius# (km)	Escape Velocity* (km/sec)
Amalthea	120	1.813	26.47	11.96	2.17×10^{-3}	283	2.36	120	0.155
Io	1820	4.216	17.33	42.46	8.91	10,542	5.79	2600	2.14
Europa	1525	6.709	13.74	85.23	4.87	13,717	9.00	2000	1.80
Ganymeda	2635	10.700	10.88	171.71	14.90	31,759	12.05	2935	2.60
Callisto	2500	18.800	8.19	400.54	10.74	50,031	20.01	2800	2.26
Titan	2500	12.220	5.57	382.69	14.01	53,106	21.24	$4\text{-}10 \times 10^3$	2.16-1.37

+ Mass of Amalthea calculated assuming a density of 3 gm cm^{-3} and a radius of 120 km.

Estimated values assuming a bound atmosphere except for Amalthea.

* Two-body escape velocities computed for the exosphere radius indicated.

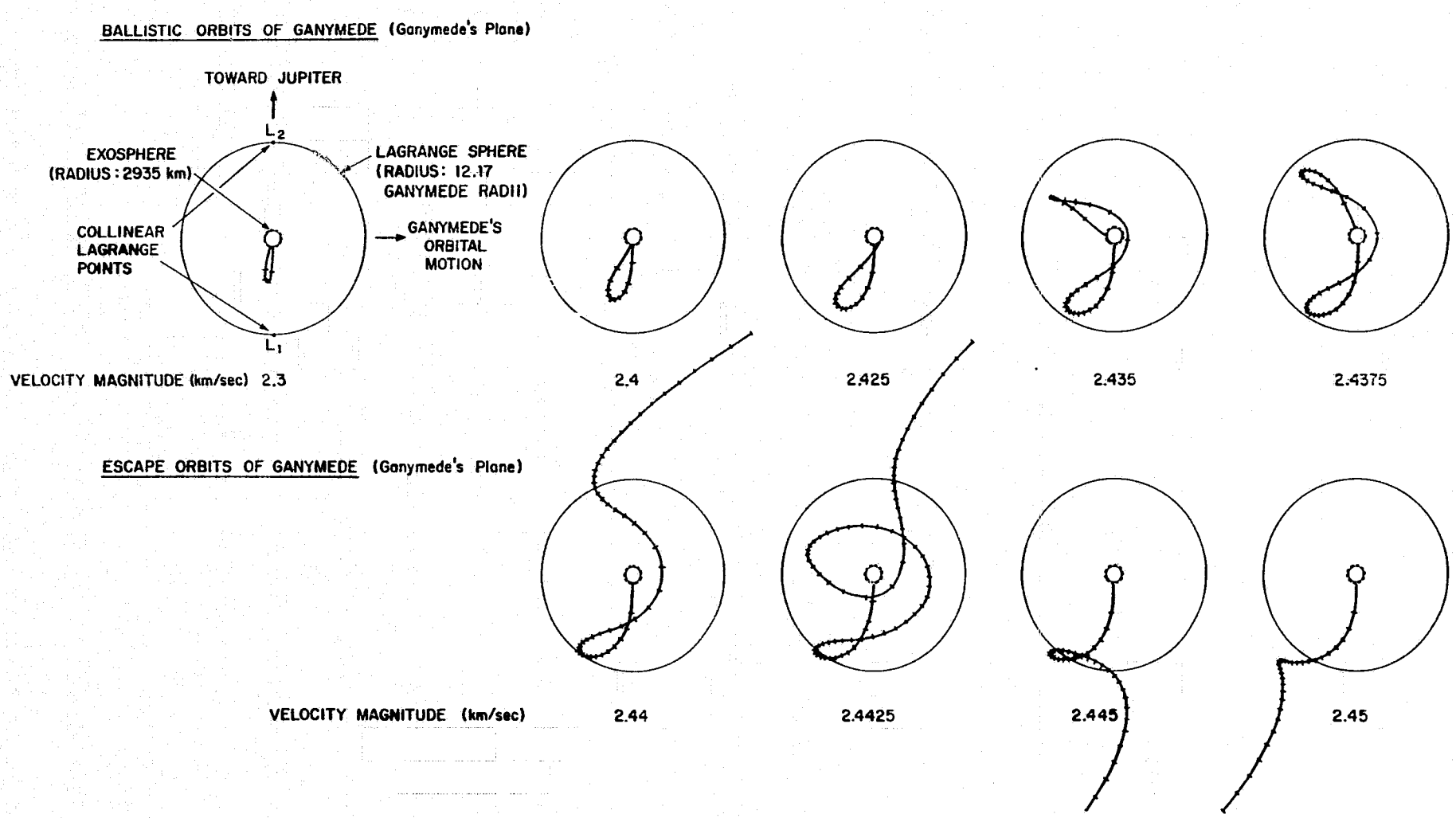

Figure 2

Ballistic and Escape Orbits of Atoms Emitted from Ganymede. Orbits of an atom initially emitted from Ganymede's exosphere, and directed radially away from Jupiter in the orbital plane of the satellite, are shown for increasing values of the atom initial velocity magnitude. The orbits are shown as seen by an observer on Ganymede and the tick marks occur at 2 hr. intervals along the orbit.

imate value for the forward and backward angular diffusion velocity of the resulting cloud relative to the satellite, $\bar{\Omega}_F$ and $\bar{\Omega}_B$, can be estimated by using the expressions of Fang et al. (1976), which assumes a massless point satellite with an isotropic Maxwell Boltzmann initial speed distribution. Results of this calculation for the six outer satellites of interest are given in Figure 3 through Figure 8 and compared with the approximate expression for the angular diffusion velocity

$$\bar{\Omega} = \frac{3}{a} \left(\frac{2kT}{\pi m}\right)^{1/2} \qquad (3.1.2)$$

where T is the temperature and m is the mass of the emitted atom. The emission temperature T roughly corresponds to an atom emerging from the Lagrange sphere with an average velocity $\bar{v}$, relative to the satellite, given by

$$\bar{v} = \left(\frac{2kT}{\pi m}\right)^{1/2} = 7.28 \times 10^{-2} \text{ km/sec} \sqrt{\frac{T}{A}} , \qquad (3.1.3)$$

where T is in °K and A is the atom mass in AMU.

The angular extent of the forward cloud Θ_F and backward cloud Θ_B about the planet, relative to the satellite location, is proportional to the lifetime τ of the neutral cloud atoms in the planetary environment

$$\Theta_{F,B} = \tau \, \bar{\Omega}_{F,B} . \qquad (3.1.4)$$

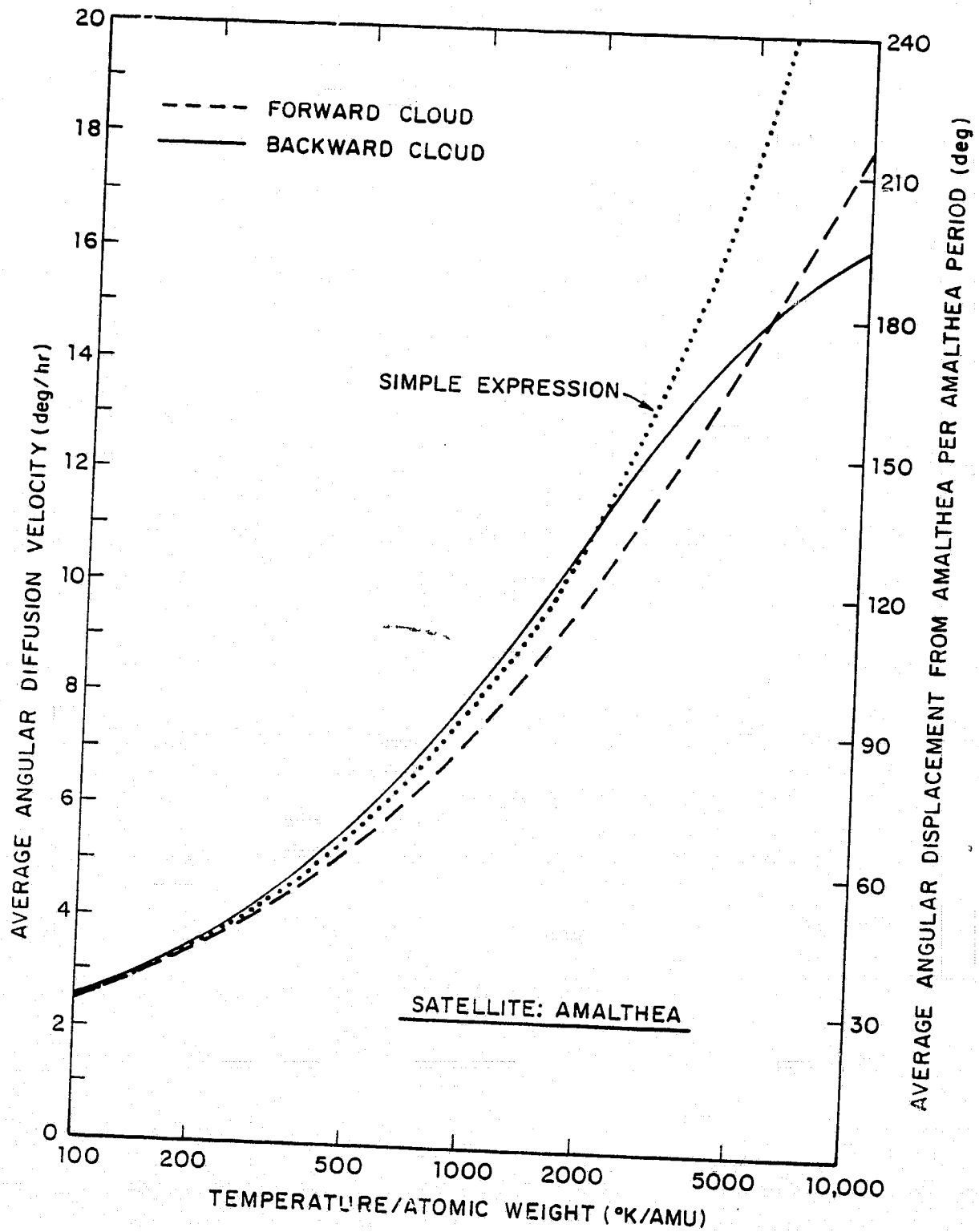

Figure 3

Forward and Backward Angular Diffusion Velocities about Jupiter of the Gas Cloud Emitted by Amalthea. The average diffusion velocities $\bar{\Omega}_F$ and $\bar{\Omega}_B$ are both compared with the simple expression $\bar{\Omega}$ with the temperature to atomic weight ratio of the emitted atoms as the dependent variable.

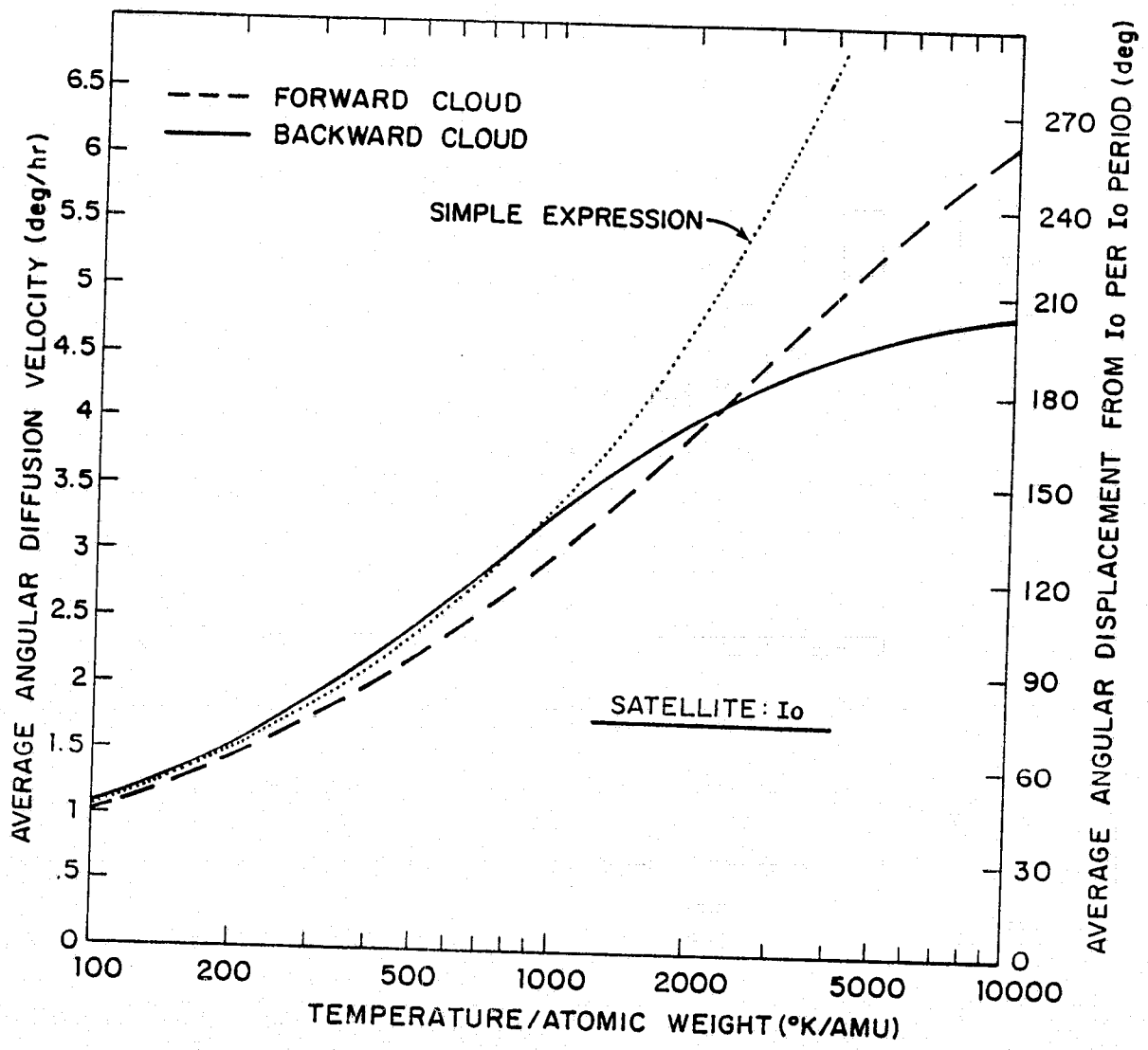

Figure 4

Forward and Backward Angular Diffusion Velocities about Jupiter of the Gas Cloud Emitted by Io. Same description as Fig. 3.

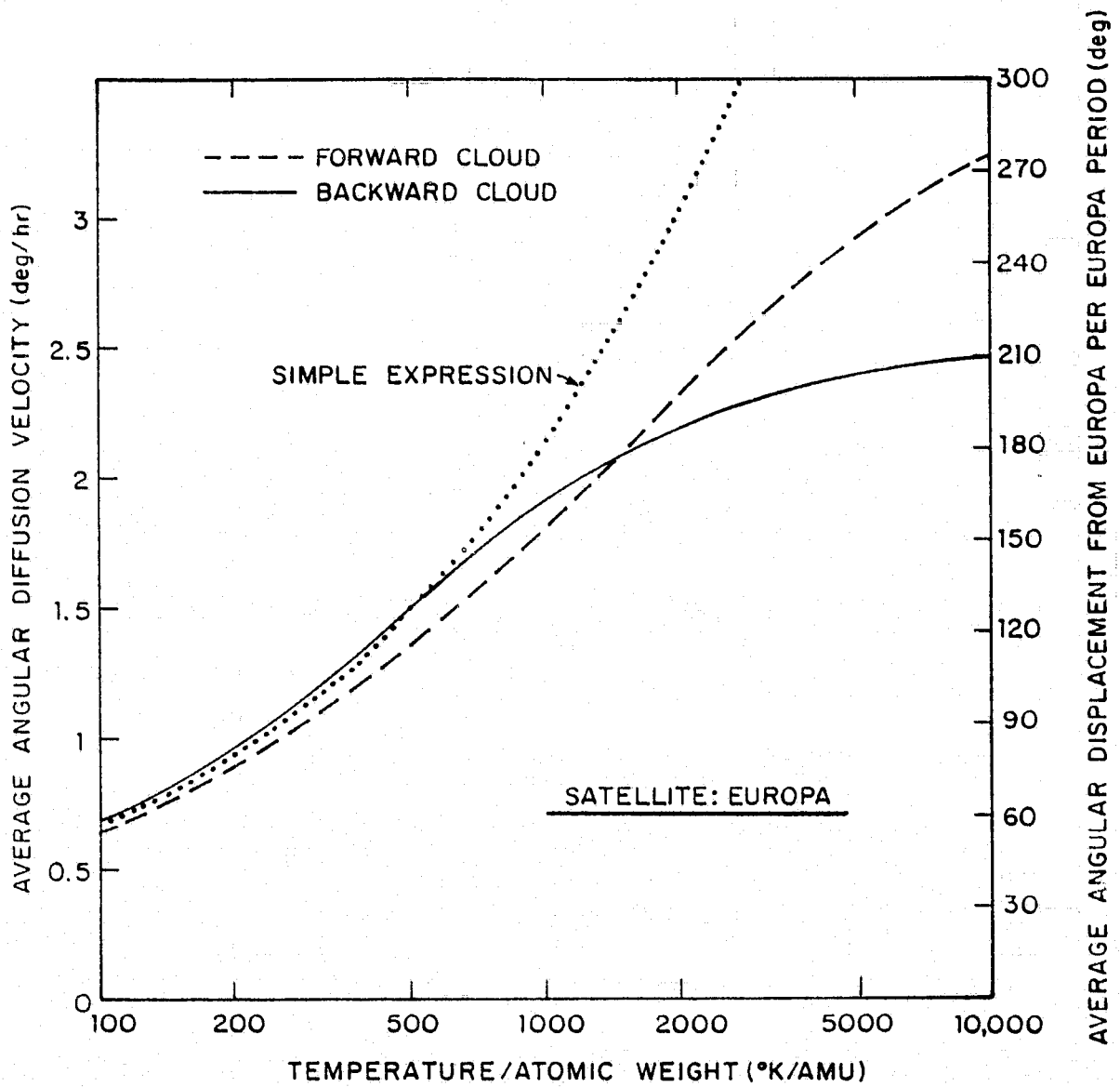

Figure 5

Forward and Backward Angular Diffusion Velocities about Jupiter of the Gas Cloud Emitted by Europa. Same description as Fig. 3.

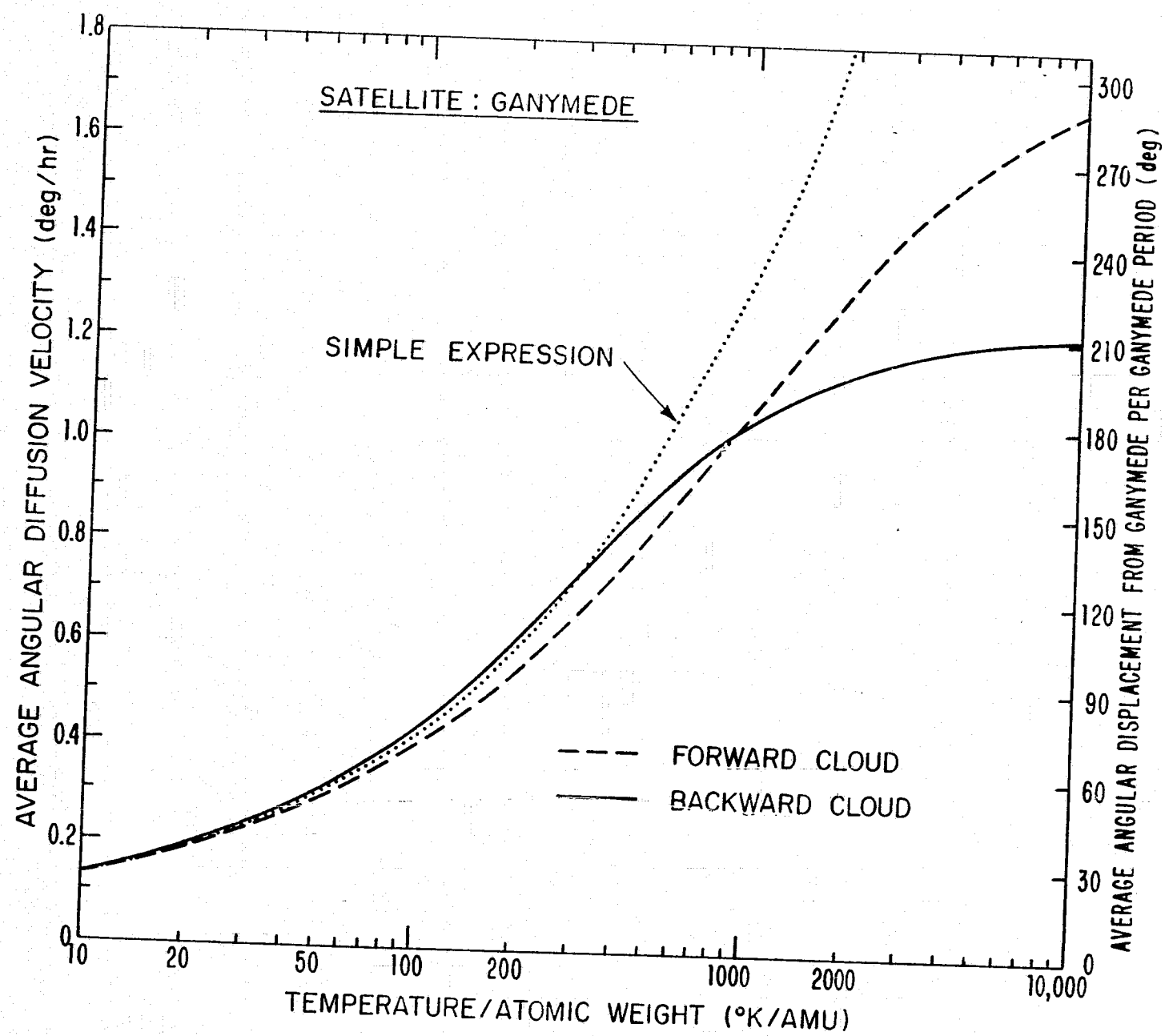

Figure 6

Forward and Backward Angular Diffusion Velocities about Jupiter of the Gas Clouds Emitted by Ganymede. Same description as Fig. 3.

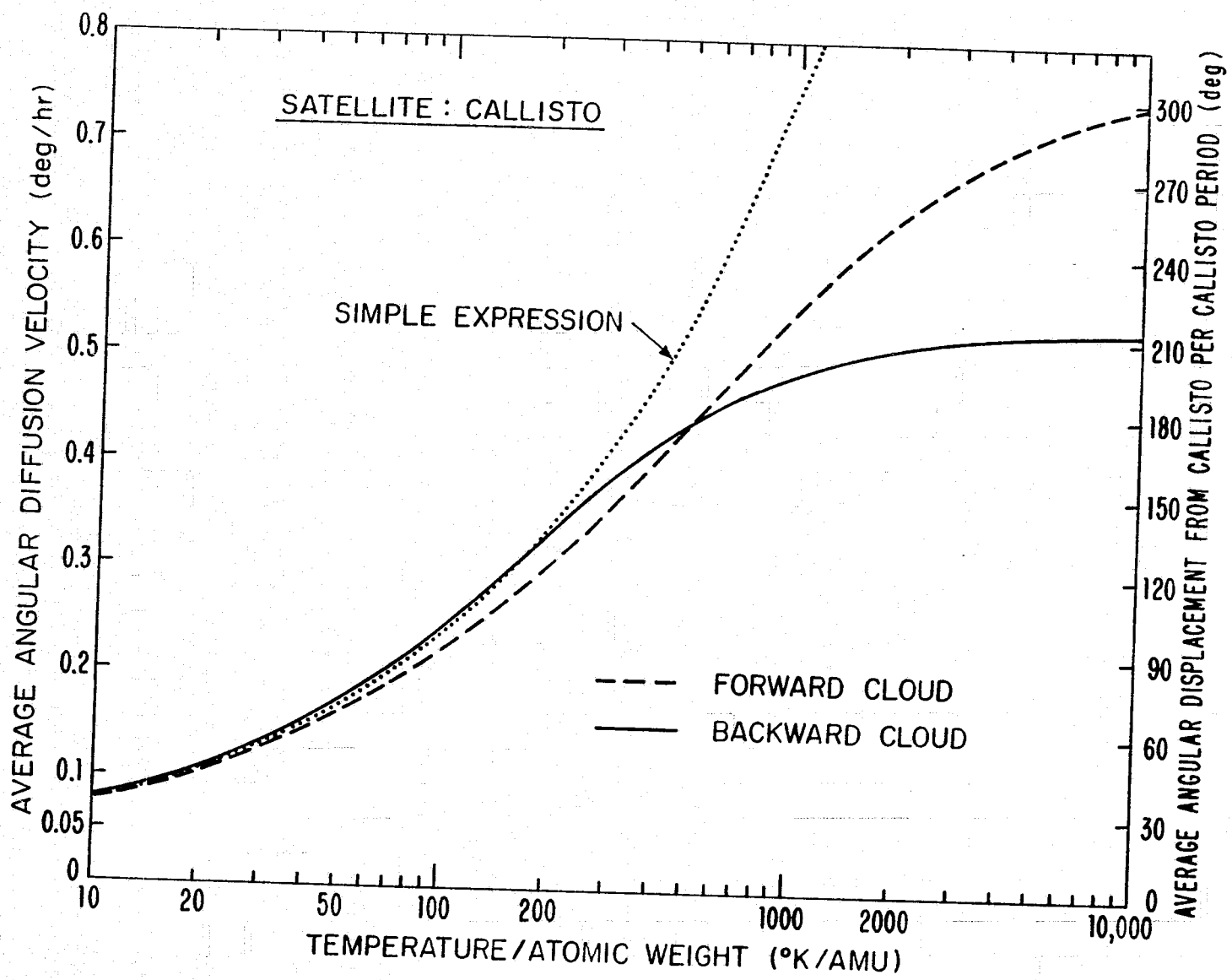

Figure 7

Forward and Backward Angular Diffusion Velocities about Jupiter of the Gas Clouds Emitted by Callisto. Same description as Fig. 3.

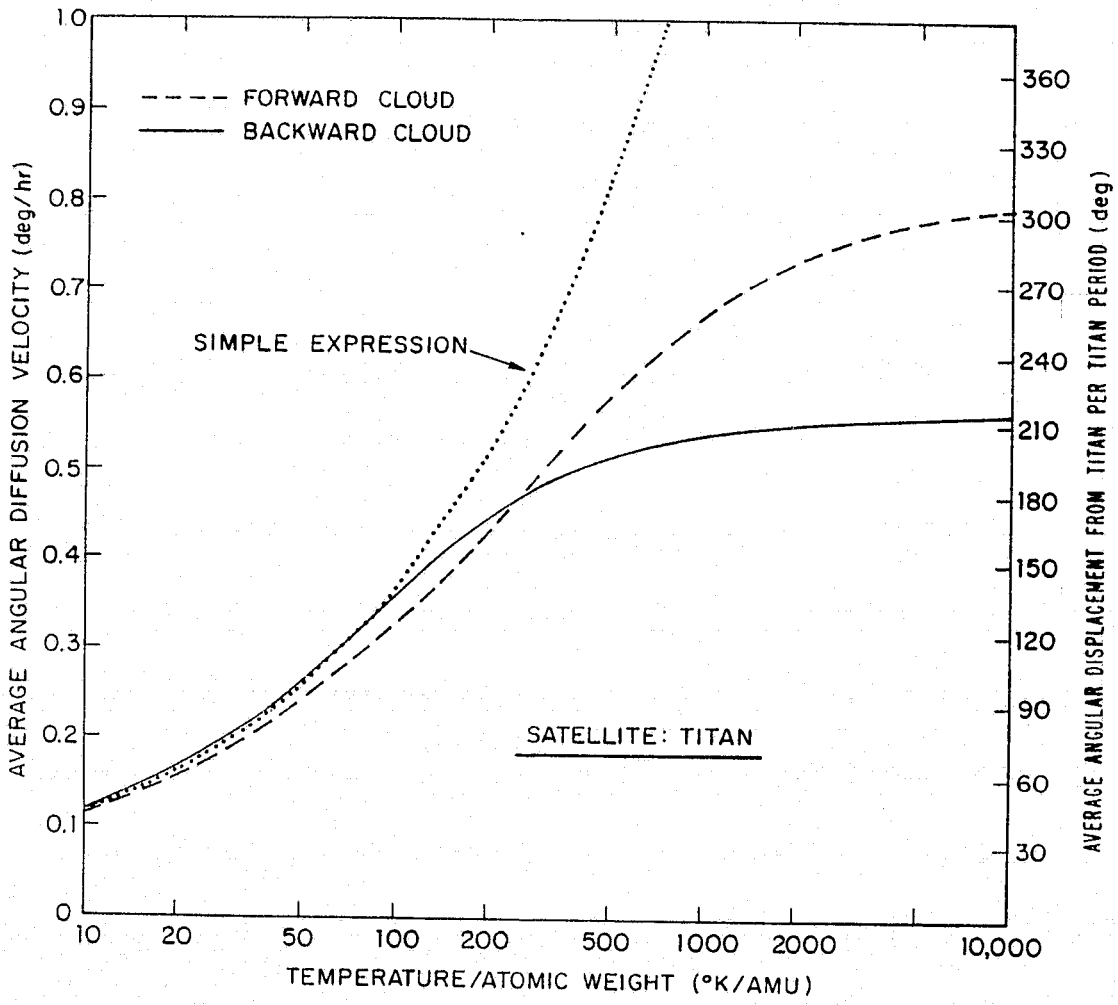

Figure 8

Forward and Backward Angular Diffusion Velocities about Saturn of the Gas Clouds Emitted by Titan. Same description as Fig. 3.

The forward and backward cloud will diffuse through an angular distance of 360° with respect to the satellite in a time interval $\tau^{D}_{F,B}$ of order

$$\tau^{D}_{F,B} = \frac{2\pi}{\bar{\Omega}_{F,B}} \qquad (3.1.5)$$

with a cylindrical symmetrical toroidal cloud forming if the lifetime τ is somewhat in excess of $\tau^{D}_{F,B}$. Values of $\tau^{D}_{F,B}$ for atoms with an emission temperature to mass ratio of 200° K/AMU are given in Table 6 for the six satellites and corresponds to hydrogen atoms escaping from the satellite Lagrange sphere with a mean velocity of 1.03 km/sec.

The gravitational field of the satellite naturally complicates this simple description near the Lagrange sphere. This is illustrated for the satellite Ganymede for both molecular and atomic hydrogen toroidal clouds. Thermal emission is assumed and the time evolution of the cloud is examined by solving the three-body gravitational problem. Using the Ganymede atomspheric model of Yung and McElroy (1977), an exospheric radius of 2935 km and a temperature of 140° K are adopted, where H and H_2 have an assumed Maxwell Boltzmann speed distribution. Restricting attention to particle orbits in the satellite plane only, the time evolution of the column density of the two toroidal clouds is shown in Figure 9 and Figure 10. Ganymede is positioned at the elongation point of its orbit in the Figures. A symmetric toroidal cloud is established for atom flight times of order

Table 6 Angular Diffusion Times τ_F^D and τ_B^D for Outer Satellite Clouds+

Satellite	τ_F^D (hr)	τ_B^D (hr)
Amalthea	106	101
Io	248	233
Europa	402	371
Ganymede	654	593
Callisto	1189	1074
Titan	835	808

+ Calculated assuming an atom emmission temperature of 200° K/AMU

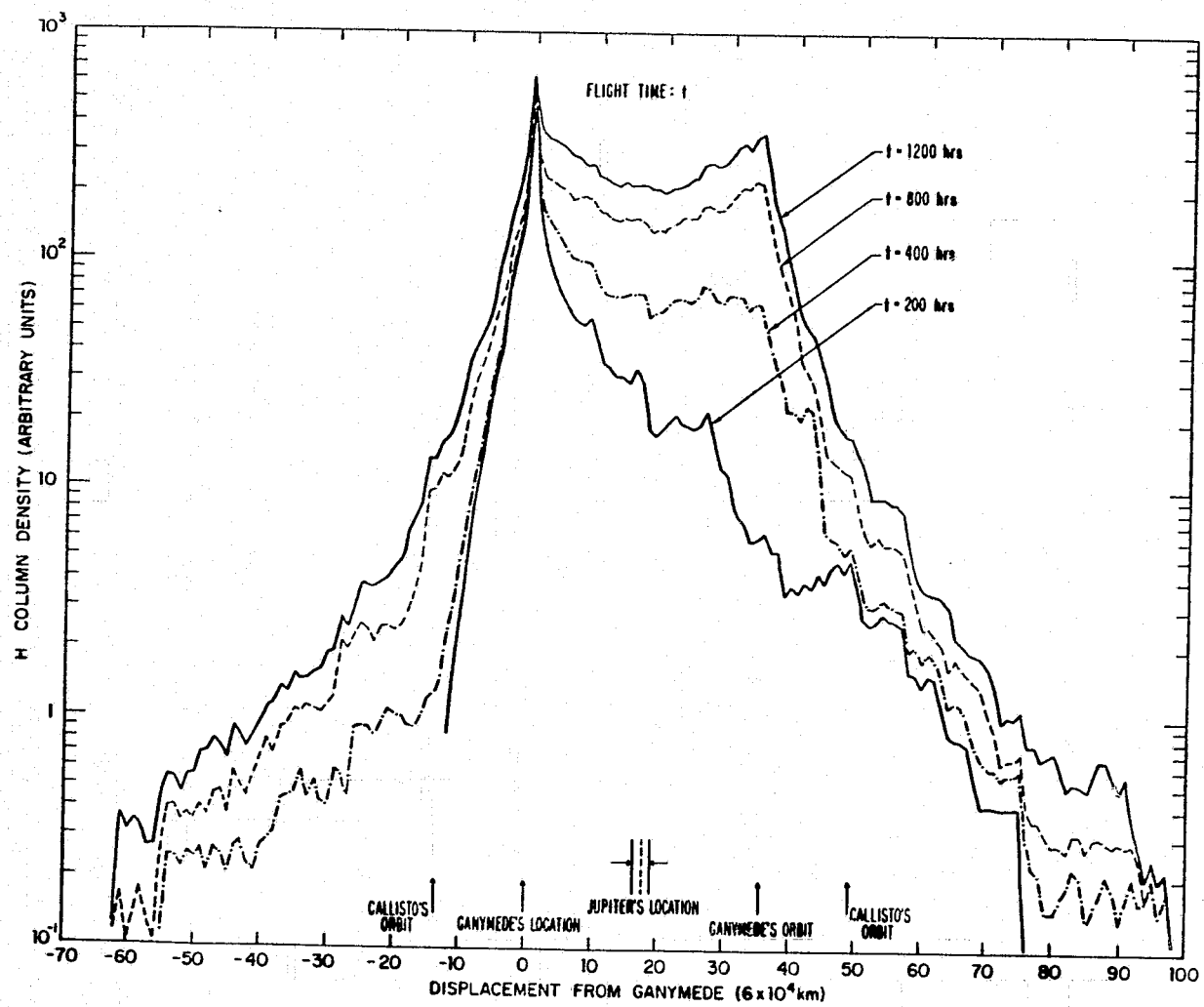

Figure 9

Time Development of the H Atom Toroidal Cloud in Ganymede's Orbital Plane. Each column density profile is calculated as described in the text. Ganymede's location at the elongation point of the orbit is indicated.

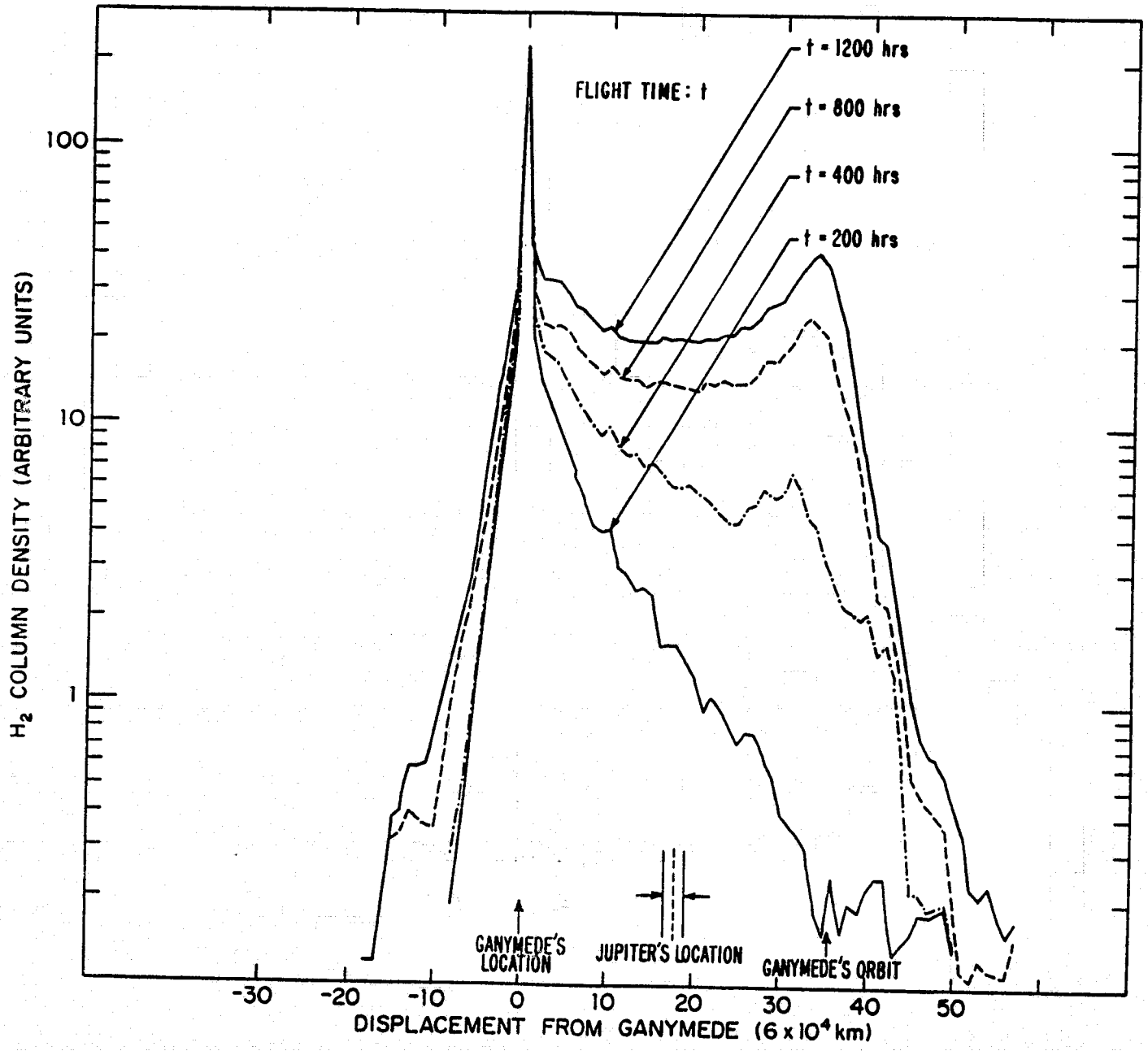

Figure 10

Time Development of the H_2 Molecular Toroidal Cloud in Ganymede's Orbital Plane. Same description as Fig. 9.

of 800 - 1200 hours, excluding the immediate vicinity of Ganymede. The column density near Ganymede is larger because 84% of the atoms and 98% of the H_2 molecules emitted per unit time are gravitationally confined to the Lagrange sphere.

3.1.2 Vertical Extent of the Toroidal Clouds

The height of the toroidal cloud above the satellite plane H is only a function of the initial emission velocity if the lifetime is longer than about one-fourth of the satellite period, a time required for an atom orbit to reach maximum vertical excursion. A simple expression for the height of the cloud directly above the satellite orbit is given by

$$H = a \frac{\bar{v}}{v_s} = \frac{a}{v_s} \left(\frac{2kT}{\pi m}\right)^{1/2} \qquad (3.1.6)$$

where the latter expression follows from the definition (3.1.3).

3.1.3 Radial Extent of the Toroidal Clouds

For a cordinate frame centered on the planet, the inner radial boundary r_- and the outer radial boundary r_+ of the gas toroidal cloud are given by the simple two-body formula

$$r_{\pm} = \frac{a}{2\left(\frac{v_s}{v_s \pm \bar{v}}\right)^2 - 1} \qquad (3.1.7)$$

This is valid if the atom lifetime τ is equal to or larger than half the atom orbit period $T_{\pm}$, given by

$$T_{\pm} = T_s \left[1 - \frac{\bar{v}}{v_s} \left(\frac{\bar{v}}{v_s} \pm 2\right)\right]^{-3/2} \qquad (3.1.8)$$

where T_s is the period of the satellite.

3.2 Estimated Spatial Extent of the Extended Hydrogen Atmospheres

In order that a satellite have an extended hydrogen atmosphere, it must have

(1) a source of hydrogen atoms

(2) a sufficiently energetic atmospheric process for gravitational escape of these atoms, and

(3) a planetary environment providing a sufficiently long lifetime for escaping atoms so they can populate a spatially extended volume.

The shape and size of the gas clouds depends critically upon the emission conditions (2) and the lifetime (3), whereas the density within this volume depends upon the magnitude of the escaping atom flux. Estimated values of the hydrogen escape flux for the outer satellites are summarized in Table 3. These flux values suggest that detection of extended hydrogen toroidal clouds for Europa, Ganymede and possibly Callisto (if similar to Ganymede) should be of order 100 times more difficult than for Io. Titan's cloud, on the other hand, should be more comparable to Io's hydro-

gen cloud and may well be more easily detected.

In what follows, it will be assumed that the first condition above is satisfied. Lifetime of hydrogen atoms in the planetary environment, needed in evaluating the third condition, are given in Table 4. What then remains, in order to estimate the spatial extent of the toroidal hydrogen atmosphere, is specification of the emission conditions for H atoms.

3.2.1 Emission Conditions

The emission conditions for H atoms - the speed, dispersion and angular character of the initial atom velocity vectors over the exosphere surface of the satellite - are not known for the satellites. In the absence of such information, attention will be directed to isotropic emission assuming a thermal-like escape mechanism. Thermal-like escape here will describe atoms which have an emission velocity distribution characterized by an exospheric temperature. For outer satellites, a value 250° K corresponds to hydrogen atoms with a most probable exospheric emission velocity of 2.0 km/sec, assuming the simplest case of a Maxwellian distribution. This emission velocity is comparable to the escape velocities of the outer satellites (see Table 5). The bulk of such H atoms, emitted from the exosphere and emerging from the Lagrange sphere, will therefore have an initial speed restricted to the tail of the thermal distribution and an exit speed of order 1 km/sec. This exit velocity corresponds for hydrogen to a two-body atom emission temperature, used

earlier in Figure 3 through Figure 8, of between 100 and 200° K/AMU.

3.2.2 Spatial Extent Estimates

The angular extent of the extended hydrogen clouds of the six outer satellites can now be estimated from the expression (3.1.4) using the angular diffusion velocities of Figure 3 through Figure 8 and the estimated lifetime values of Table 4. Results are given in Table 7 for atom emission temperature of 100, 200 and 500° K/AMU, and correspond to a velocity $\bar{v}$ for hydrogen atoms emerging from the Lagrange spheres of about 0.73, 1.03 and 1.63 km/sec. The lower two velocities represent thermal emission as discussed earlier. The highest velocity case is more appropriate for non-thermal emission such as surface sputtering or electromagnetic driven escape processes. Observations for Io and Amalthea (Table 2) suggest that thermal emission may be more appropriate, resulting in partial toroidal clouds for Amalthea, Io and Europa, and somewhat well developed complete toroidal clouds for Ganymede, Callisto and Titan.

The vertical and radial extent of these clouds may be calculated using the expressions (3.1.6) and (3.1.7). Results are given in Table 8 for an atom emission temperature of 200° K/AMU. The estimated total height of 0.7 Jupiter radii for the Io cloud is in agreement with the observations of Table 2. Note that in Table 8 the individual clouds for the Galilean satellites overlap radially, so

Table 7 Estimated Forward and Backward Angular Extent of the Hydrogen Toroidal Clouds

	100° K/AMU		200° K/AMU		500° K/AMU		
Satellite	θ_F (deg)	θ_B (deg)	θ_F (deg)	θ_B (deg)	θ_F (deg)	θ_B (deg)	Hydrogen Lifetime (hr)
Amalthea	120	130	170	180	270	280	50
	17	18	24	25	37	40	7
Io	50	50	70	80	110	120	50
	60	60	80	90	120	140	56
Europa	130	140	180	190	270	300	200
Ganymede	1000	1100	1400	1500	2000	2200	2500
Callisto	560	600	760	840	1100	1100	2500
Titan	750	830	990	1030	1340	1180	2300

Table 8 Estimated Vertical and Radial Extent of the Hydrogen Toroidal Clouds+

Satellite	H (Planet radii)*	r_- (Planet radii)	Satellite Location (Planet radii)	r_+ (Planet radii)
Amalthea	±0.099	2.18	2.54	2.98
Io	±0.351	4.69	5.91	7.56
Europa	±0.704	7.03	9.40	12.86
Ganymede	±1.003	10.42	15.00	22.41
Callisto	±3.309	16.31	26.35	45.54
Titan	±3.74	10.08	20.23	47.58

+ Calculated assuming an atom emission temperature of 200° K/AMU

* Planet Radius, 7.135×10^4 for Jupiter and 6.04×10^4 km for Saturn

that if each one exists, a spatially extended source of protons for the Jovian magnetosphere is provided in the radial annulus from 4.7 to 45.5.

3.3 Cloud Model

In the cloud model, atoms are released radially from a satellite's exobase with some specified distributions of speeds and emission flux. Atom trajectories are modeled by numerically solving the restricted three-body problem as described by Smyth and McElroy (1977). The contribution of individual atoms to the cloud density in any given volume of space is proportional to the initial source strength and the residence time appropriate to the volume element. Atoms are assumed emitted continuously and at a constant rate, with individual trajectories terminated according to some prespecified lifetime. Calculations were performed on a CDC 7600 computer with a typical model for the cloud assuming that the exobase is divided into 1298 source elements.

For extended hydrogen atmospheres, cloud intensity contours are calculated assuming solar resonance scattering of Lyman-α radiation by the hydrogen atoms. In the case of sodium, the radiation intensity in the D lines is calculated for the optically thin limit, also assuming resonance scattering of sunlight. Proper account is taken of Doppler shifts introduced due to the motion of sodium atoms with respect to the sun and the Fraunhofer absorption feature present in the solar spectrum.

CHAPTER IV

MODELING RESULTS

4.1 Introduction

Exploratory prototype modeling of hydrogen toroidal gas clouds for the outer satellites Amalthea, Ganymede, Callisto and Titan has been undertaken using our cloud model. Model calculations are performed for the probable atom emission and lifetime conditions outlined in earlier chapters. Results suggest than the tentative detection of a partial toroidal hydrogen cloud for Amalthea by the UV instrument of Pioneer 10 could be explained if the satellite atom escape flux is of order 10^{11} $cm^{-2}sec^{-1}$. Model calculations confirm the earlier estimated results of Chapter III that the extended hydrogen atmospheres of Ganymede, Callisto and Titan form complete toroidal-shaped clouds about their parent planets. The spatial structure, dynamics and detectability of these hydrogen clouds are discussed in the following section.

The initial spatial distribution of protons created by the modeled extended hydrogen atmospheres of Amalthea, Ganymede, Callisto and Titan is calculated and presented in the third section. Also included is the initial spatial distribution of heavy ions created by the sodium cloud of Io. Finally, the current status of modeling the line profiles of sodium atoms emitting D1 and D2 radiation from Io's extended sodium atmosphere is discussed in the last section of this chapter.

4.2 Exploratory Modeling of Extended Hydrogen Atmospheres

The model computations reported here were performed using our cloud model described in section 3.3, which includes both the gravitational effects of the satellite and planet upon the extended-atmosphere atoms. For the four satellites of interest, the most probable values for atom emission conditions and lifetime, estimated earlier, were assumed to define modeling parameters. For each satellite, additional values for these parameters were also considered to illustrate the variety of results that might be expected due to uncertainties in prescribing the atom emission and lifetime conditions. Isotropic emission of hydrogen atoms from the satellite exosphere was assumed in all model calculations.

The resulting spatial structure of each toroidal-shaped extended atmosphere is presented in the form of several two-dimensional contour plots. For the case of intensity plots, the contours were calculated assuming resonance scattering of solar Lyman-α radiation by the hydrogen atoms.

4.2.1 Results for Amalthea

Primary emphasis in modeling the extended hydrogen atmosphere of Amalthea has been to estimate the atom emission parameters necessary to form an H cloud, with Lyman-α intensity comparable to that tentatively detected by the UV instrument aboard the Pioneer 10 spacecraft (Judge et al., 1976). The most favorable condition for the UV instrument to

detect the H cloud occurred at 18.0 hours on spacecraft time day 334 GMT (see Judge et al., 1976; P-1075) when Amalthea was in the field of view.

A model computation, assuming isotropic emission of H atoms from the satellite surface with a radial velocity of 1 km/sec, predicts a partial toroidal-shaped hydrogen cloud of approximately the correct angular extent for a cloud lifetime of 50 hours. The column density contour plot of this partial toroidal cloud viewed from above the satellite plane is shown in Figure 11. This model computation further indicates that the signal measured at 18.0 hours on day 334 could be produced by solar resonance scattering of Amalthea's extended hydrogen atmosphere if the escape flux of hydrogen from the satellite surface were of order 10^{11} atoms $cm^{-2}sec^{-1}$ The Lyman-α intensity distribution of this cloud for a 10^{11} $cm^{-2}sec^{-1}$ flux is shown in Figure 12 from a Pioneer 10-like viewing perspective nearly parallel to the satellite plane. The one degree width by ten degrees high aperature of UV instrument, assumed centered on the satellite for this calculation, sees all the Lyman-α radiation emitted from the cloud within a slice 0.52 Jupiter radii left and right of Amalthea. A flux of 10^{11} $cm^{-2}sec^{-1}$, although large and perhaps improbable, is not impossible. If supplied from the satellite surface, for example from H_2O ice, it would be equivalent to depleting only a few kilometers of the surface in 4×10^9 years. If supplied by satellite neutralization of energetic magnetospheric protons, a large flux of protons, in excess of 10^{11} $cm^{-2}sec^{-1}$, would be required.

AMALTHEA 50 hr.

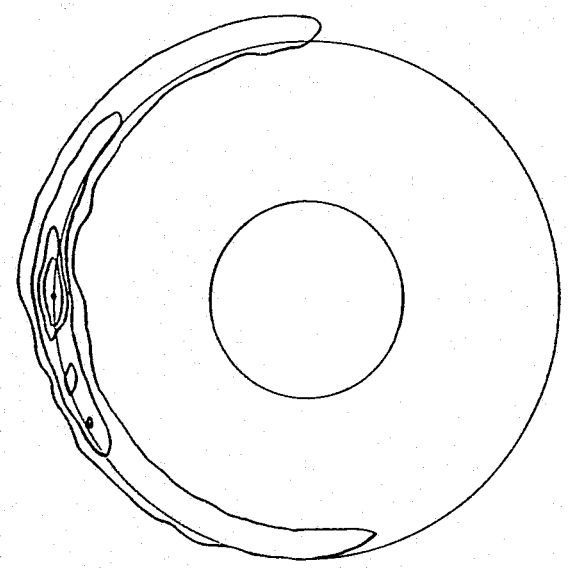

Figure 11

Model for the extended Hydrogen Atmosphere of Amalthea. Column density contours, calculated from the cloud model for a 1.0 km/sec emission velocity and a 50 hour lifetime, are shown as viewed from above the satellite plane. The outer contour value is about 1/20 of the maximum column density. The location of Amalthea, its orbital track and Jupiter are indicated.

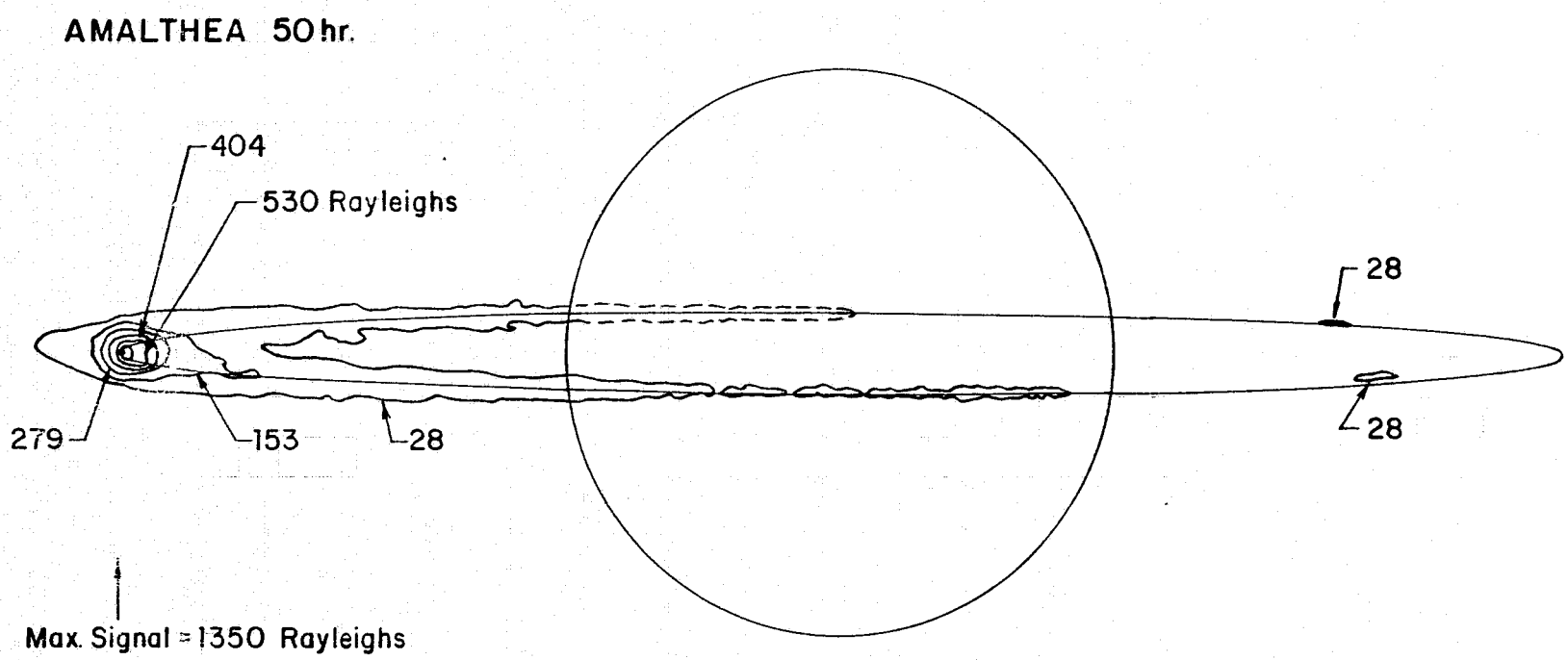

Model Parameters

Emission Velocity = 1.0 km/sec
Atom Lifetime = 50 hrs.
Hydrogen Flux = 10^{11} $cm^{-2}sec^{-1}$

Figure 12

Lyman-α Radiation from Amalthea's Extended Hydrogen Atmosphere. Intensity contours, calculated assuming resonance scattering of sunlight and the model parameters indicated, are shown for the satellite orbit plane tilted by 3.254 degrees.

In the event that a higher emission velocity or a longer lifetime is appropriate for the extended hydrogen atmosphere of Amalthea, the resulting toroidal cloud will exist all the way around Jupiter. This situation is illustrated in Figure 13 and Figure 14 where model results are shown for an emission velocity of 1.5 km/sec and a lifetime of 50 hours. The toroidal cloud, although complete, is by no means symmetrical about Jupiter.

4.2.2 Results from Ganymede

Unlike Amalthea, the estimated lifetime for Ganymede's hydrogen cloud atoms is sufficiently long (2500 hr) so as to ensure formation of a complete, nearly symmetric, toroidal-shaped gas cloud. The time evolution of this cloud is illustrated in Figure 15 through Figure 19, where the circular orbit of the satellite is viewed from above the orbit plane. The column density contours are calculated assuming radial emission of H atoms from the satellite exosphere (2935 km radius) with an initial velocity of 2.7 km/sec. Such atoms emerge from the Lagrange sphere with a velocity of about 1 km/sec and the cloud dynamics correspond approximately to the 200° K/AMU atom emission temperature results discussed in Chapter III. The forward and backward clouds diffuse ahead and behind the satellite (see Figure 15-17) with their outer contours (having about 1/20 of the peak column density value) meeting on the far side of the circular orbit in about 600 hours of flight time. For longer times (Figure 18-19),

AMALTHEA 50hr.

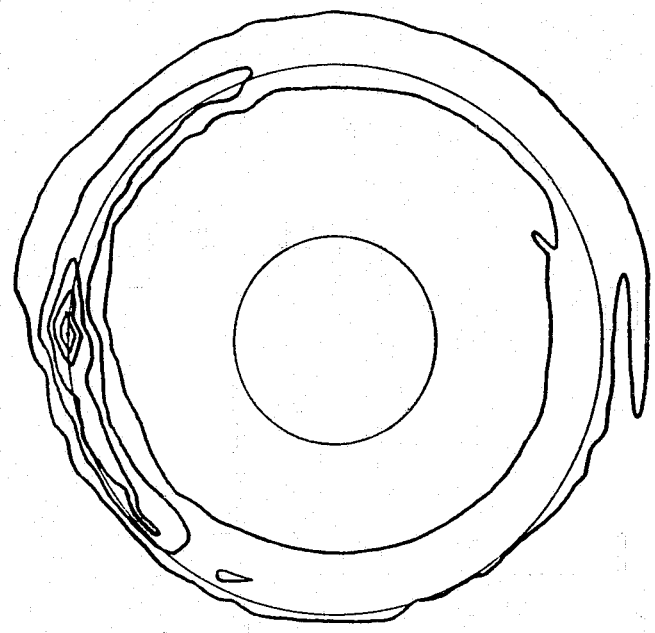

Figure 13

Model for the Extended Hydrogen Atmosphere of Amalthea. Same description as Fig. 11 except with a 1.5 km/sec emission velocity and an outer contour about 1/50 of the maximum column density value.

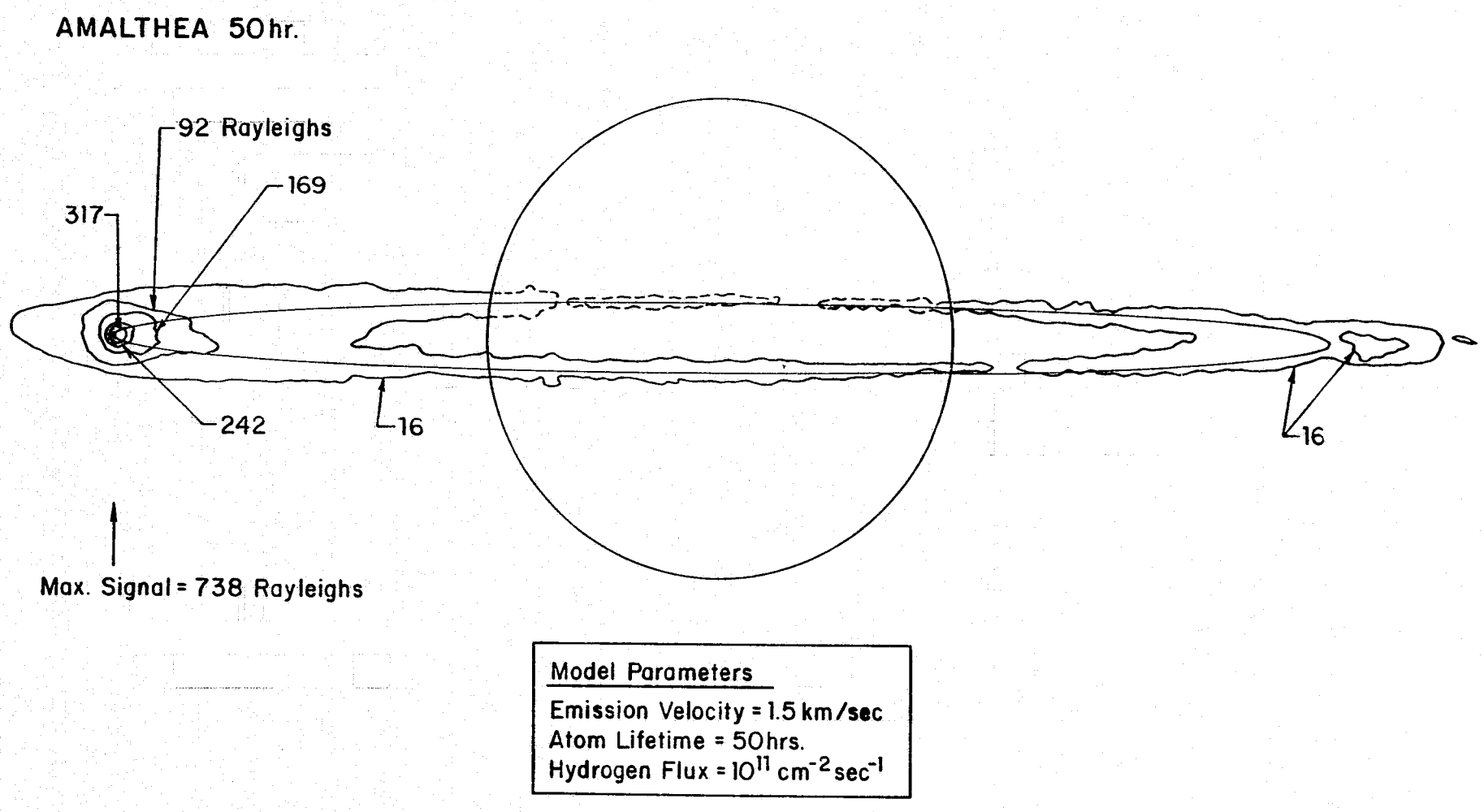

Figure 14

Lyman-α Radiation from Amalthea's Extended Hydrogen Atmosphere. Same description as Fig. 12.

GANYMEDE 200 hr.

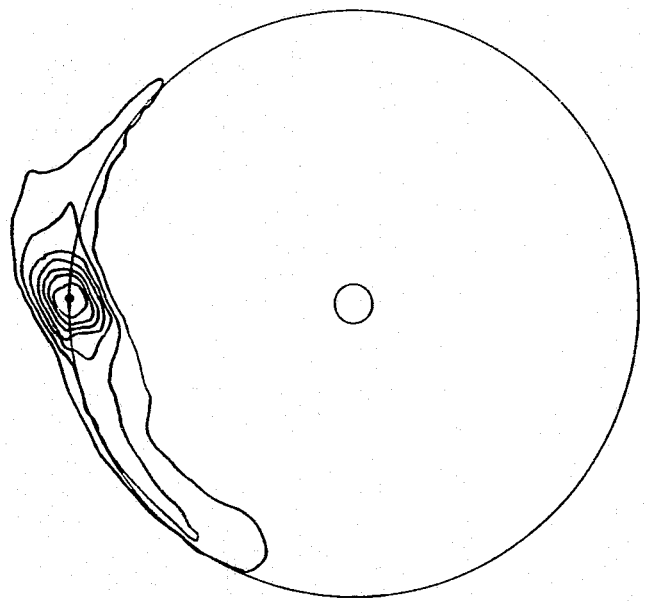

Figure 15

Cloud Dynamics for the Extended Hydrogen Atmosphere of Ganymede. Column density contours, calculated using the cloud model for an initial speed of 2.7 km/sec and the lifetime indicated above, are shown as viewed from above the satellite plane. The location of Ganymede, its orbital track and Jupiter are indicated.

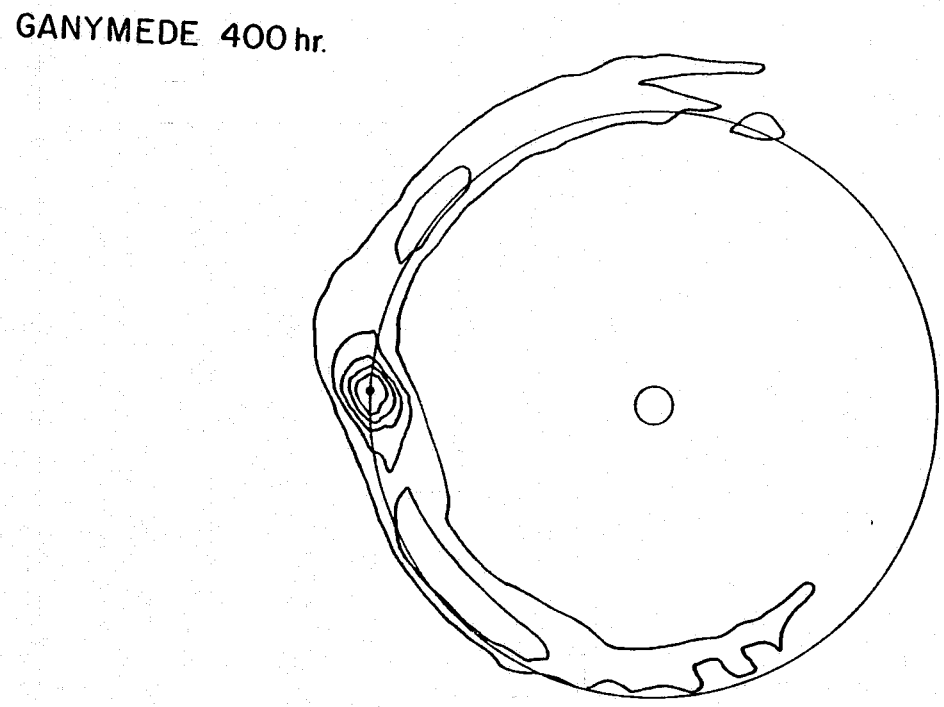

Figure 16

Cloud Dynamics for the Extended Hydrogen Atmosphere of Ganymede. Same description as Fig. 15.

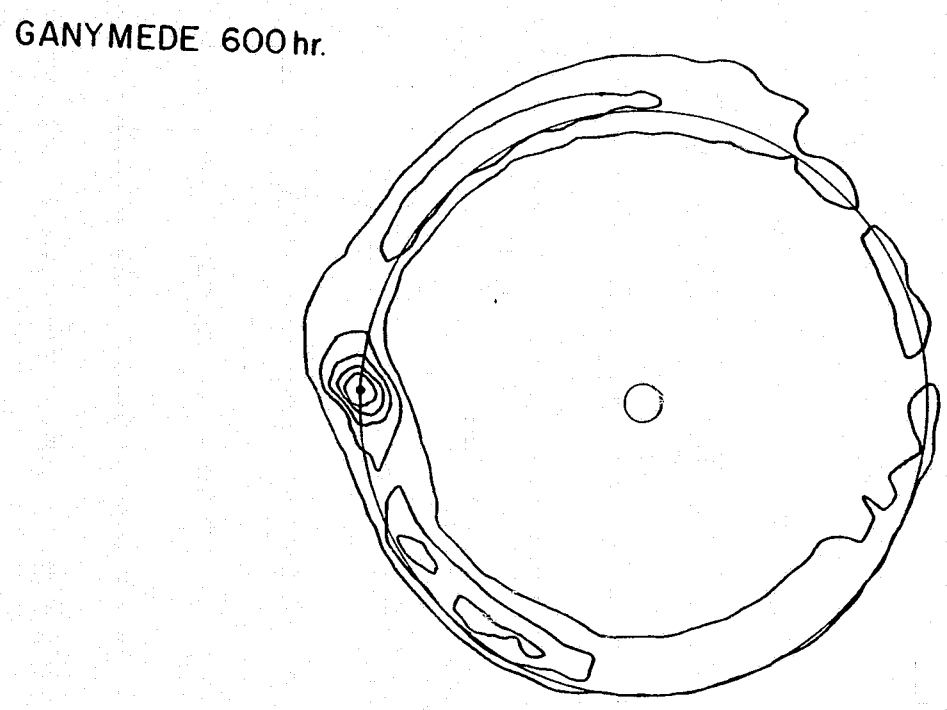

Figure 17

Cloud Dynamics for the Extended Hydrogen Atmosphere of Ganymede. Same description as Fig. 15.

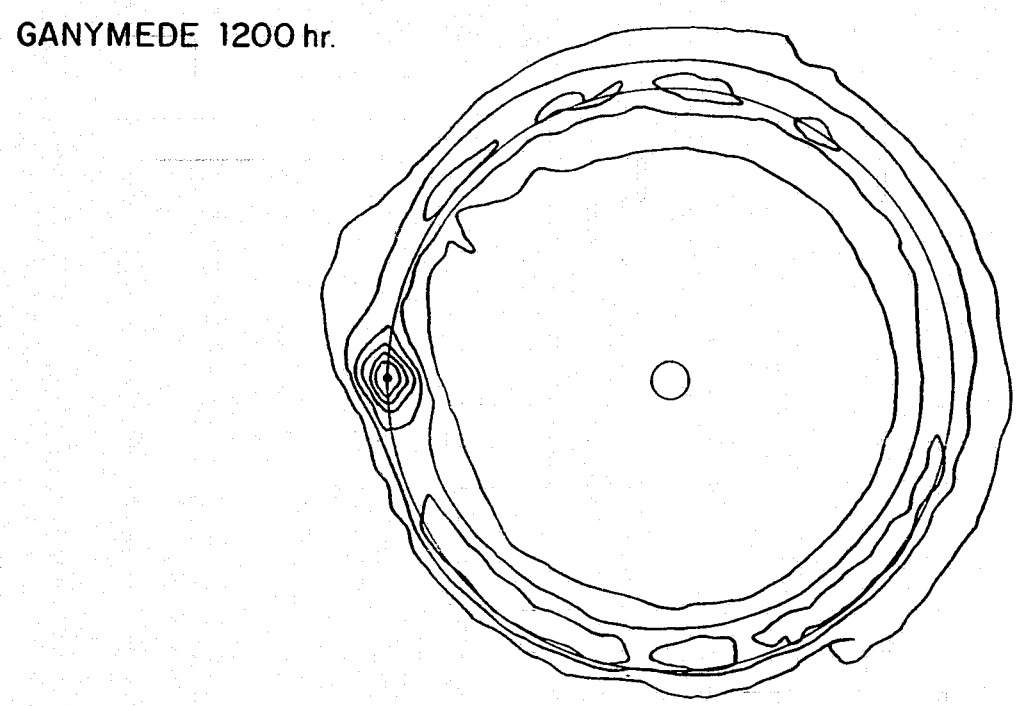

Figure 18

Cloud Dynamics for the Extended Hydrogen Atmosphere of Ganymede. Same description as Fig. 15.

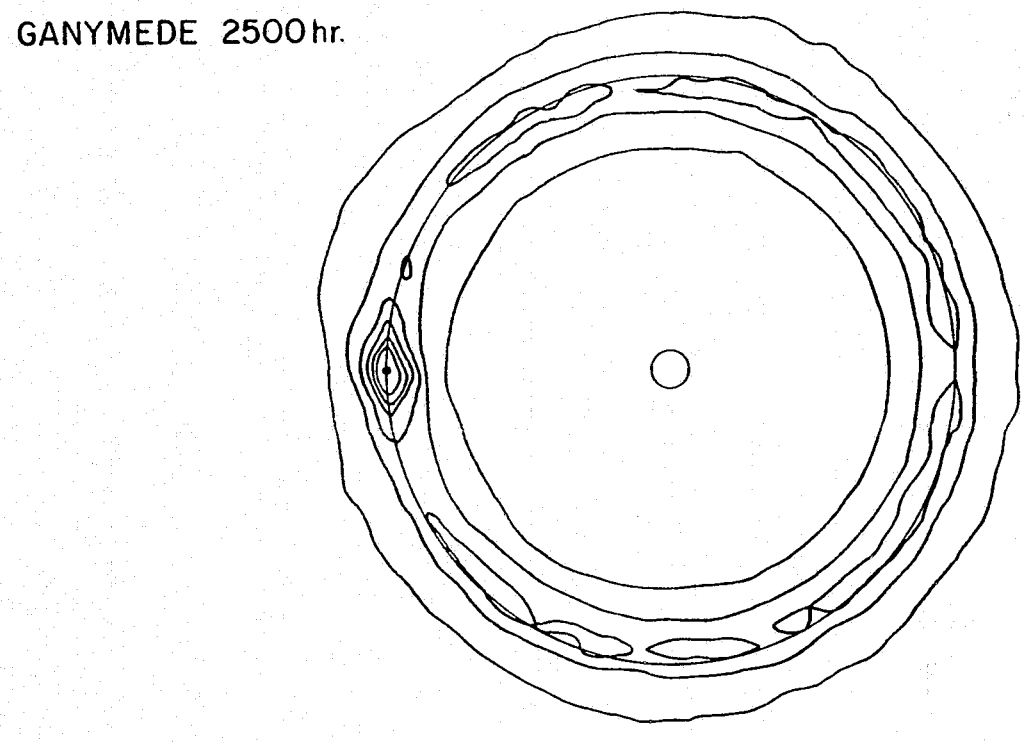

Figure 19

Cloud Dynamics for the Extended Hydrogen Atmosphere of Ganymede. Same description as Fig. 15.

the two clouds coalesce and produce a complete toroidal cloud which becomes increasingly more cylindrically symmetric.

Voyager spacecrafts approaching Jupiter in 1979 will view the cloud nearly in the plane of the satellite so that the circular orbit appears as a thin ellipse. Results given in Figure 19 are also presented in Figure 20 as they would appear to the Voyager spacecrafts. Intensities resulting from resonant scattering of solar Lyman-α radiation by cloud atoms are indicated assuming an escape flux of 5×10^7 H atoms $cm^{-2} sec^{-1}$ from the satellite. The UV instrument aboard the Voyager spacecrafts is capable of detecting a 5 Rayleigh signal above the background (150 Rayleights) for a two hour period of observation (Broadfoot 1978). This instrument, with a rectangular viewing aperature of 0.1 by 1.0 degrees, sees a field of view of 0.1 by 1.0 diameters of Jupiter when the spacecraft is about 60 planetary radii from the satellite. The calculated cloud intensity should therefore be easily detected by the UV instrument when observing near the end of the satellite orbit. Detection becomes more marginal when viewing spatial regions closer to Jupiter. Absence of a detectable signal will provide an upper limit to the hydrogen escape flux.

If the lifetime of hydrogen atoms in the vicinity of Ganymede's orbit were much shorter than the 2500 hour estimate, detection of the cloud by Voyager would be more difficult. This situation is illustrated in Figure 21 and Figure 22 where model results are shown for a lifetime of 200 and 900 hours respectively. The emission velocity and

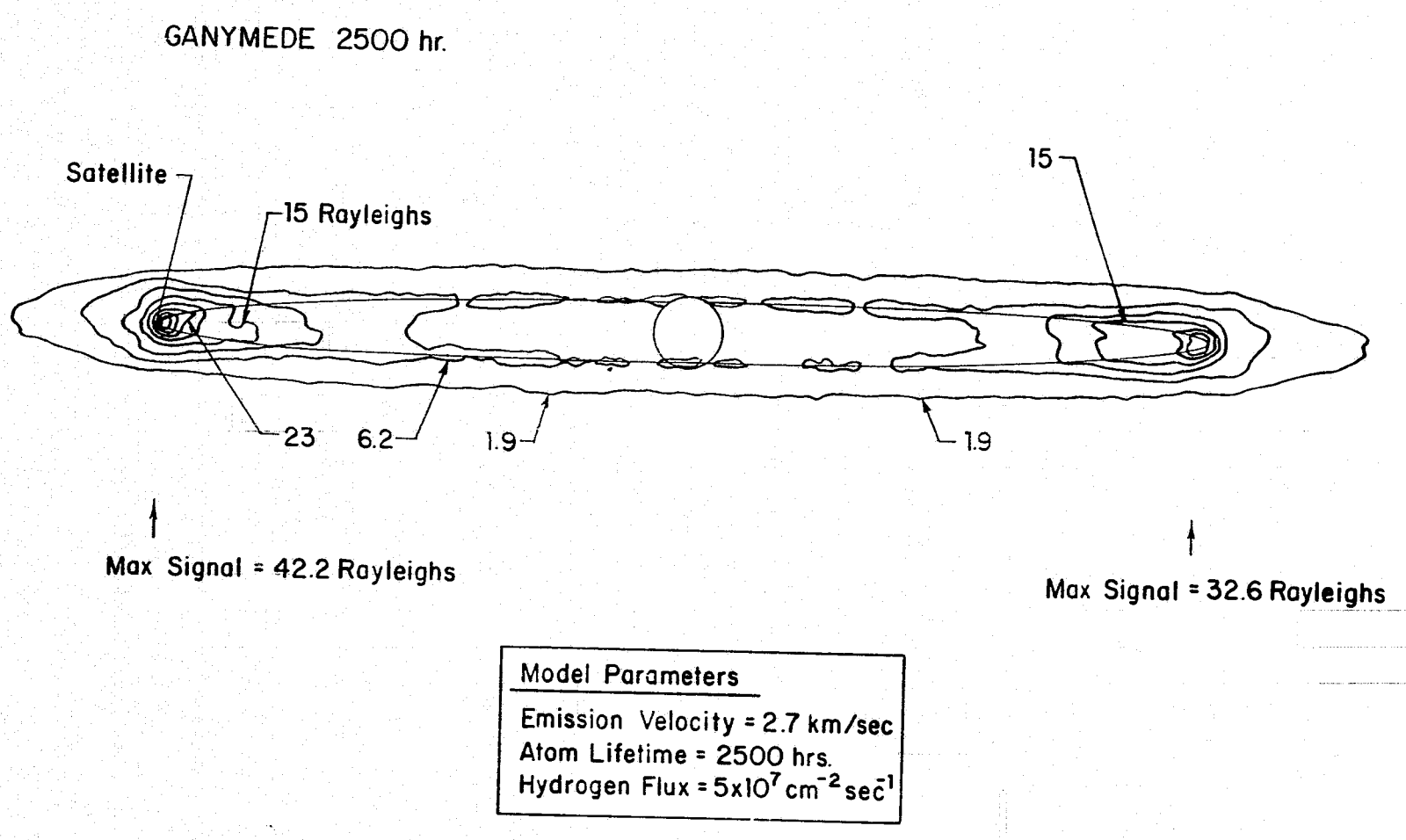

Figure 20

Lyman-α Radiation from Ganymede's Extended Hydrogen Atmosphere. Intensity contours, shown for the satellite orbit plane tilted by 3.254 degrees, were calculated assuming resonance scattering of sunlight and the model parameters indicated.

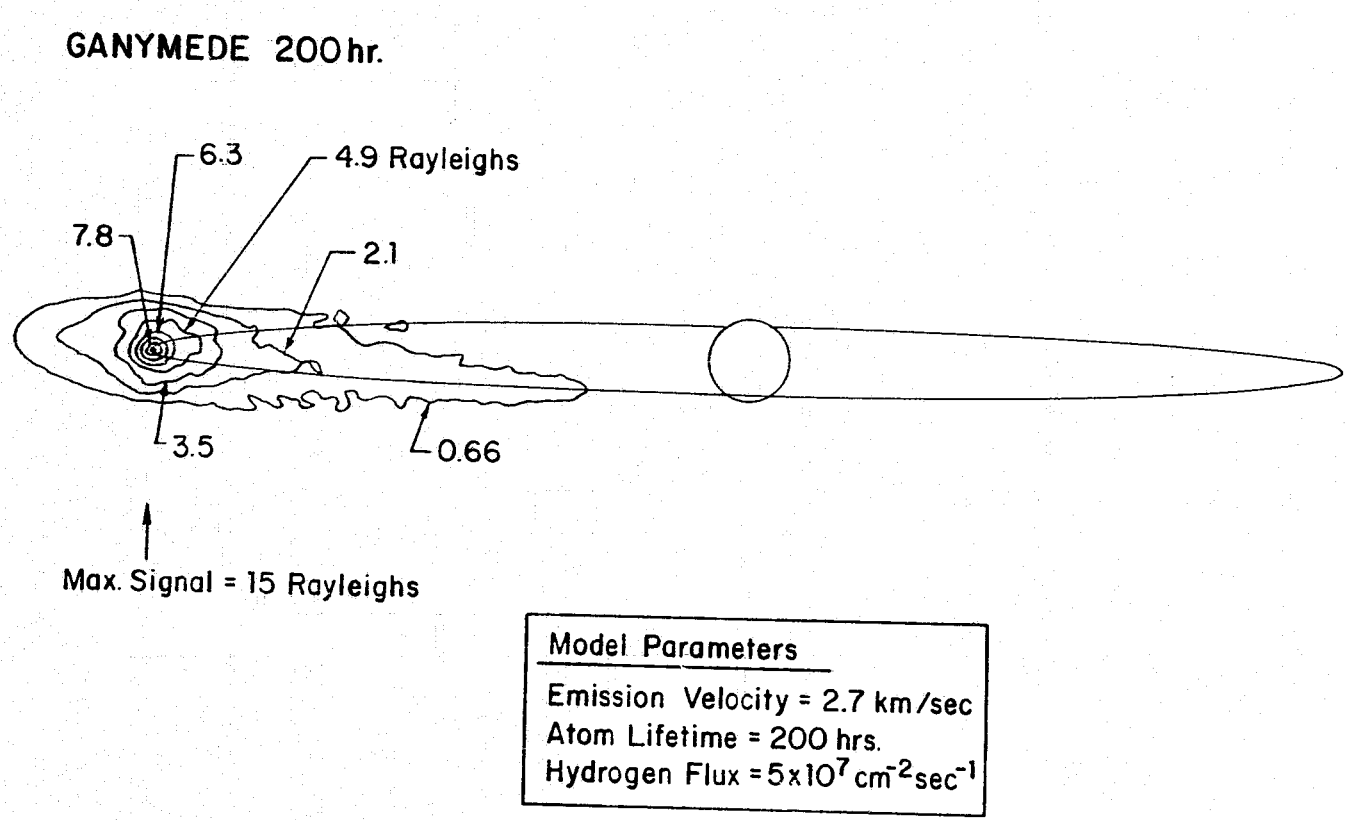

Figure 21

Lyman-α Radiation for Ganymede's Extended Hydrogen Atmosphere. Same description as Fig. 20.

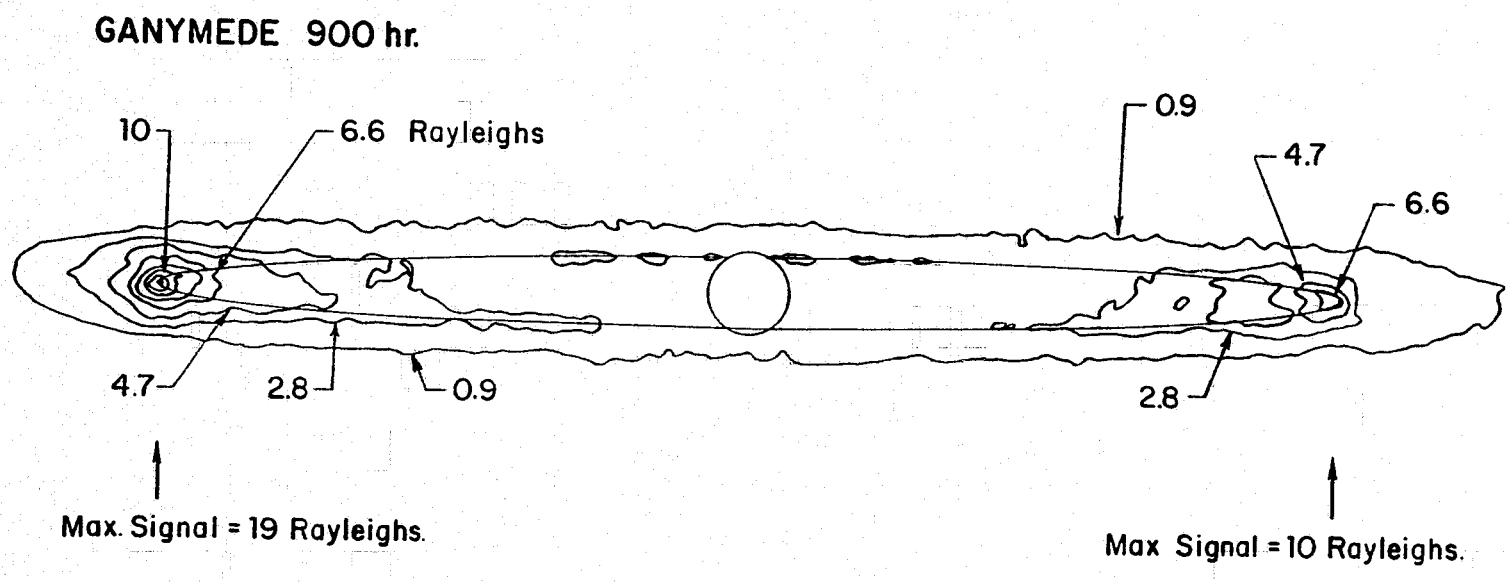

Model Parameters

Emission Velocity = 2.7 km/sec
Atom Lifetime = 900 hrs.
Hydrogen Flux = 5×10^7 $cm^{-2} sec^{-1}$

Figure 22

Lyman-α Radiation for Ganymede's Extended Hydrogen Atmosphere. Same description as Fig. 20.

atom flux are assumed to be 2.7 km/sec and 5×10^7 $cm^{-2}sec^{-1}$ repsectively, as before, For the smaller lifetime, the cloud is too faint to be seen by Voyager except very near the satellite. Detection for the 900 hour lifetime case would be expected near Gaqymede and at the two elongation points of the satellite orbit.

4.2.3 Results for Callisto

Similar to Ganymede, the estimated lifetime for Callisto's hydrogen cloud atoms is sufficiently long to allow a complete nearly symmetric toroidal-shaped gas cloud to develop. For model computations, the initial velocity of H atoms emitted radially from the satellite exosphere is assumed to be 2.4 km/sec, so that atoms emerging from the Lagrange sphere have a velocity of about 1 km/sec. The flux of H atoms emitted by the satellite is chosen to be 5×10^7 $cm^{-2}sec^{-1}$, the value suggested for Ganymede by Yung and McElroy (1977). This value is likely on upper bound since Callisto has less H_2O ice or frost surface cover than Ganymede, and would then be less capable of supplying H atoms through postulated evaporation, photodissociation and escape processes.

Model computations, adopting the above conditions and a hydrogen lifetime of 2600 hours, are shown in Figure 23 and illustrate the nearly symmetric structure of the cloud as seen from the viewing perspective of a Voyager spacecraft in Figure 24. Here cloud intensity contours are less than 5 Rayleighs

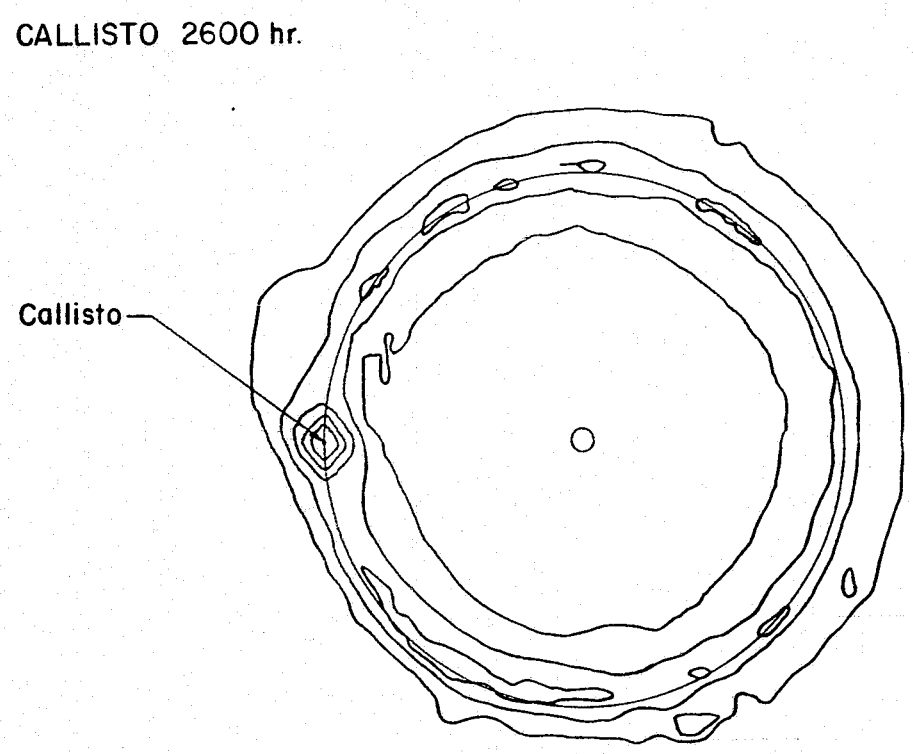

Figure 23

Model for the Extended Hydrogen Atmosphere of Callisto. Column density contours are shown as viewed from above the satellite plane and are calculated assuming a 2.4 km/sec emission velocity and a 2600 hour lifetime. The location of the satellite, its orbital track and Jupiter are indicated.

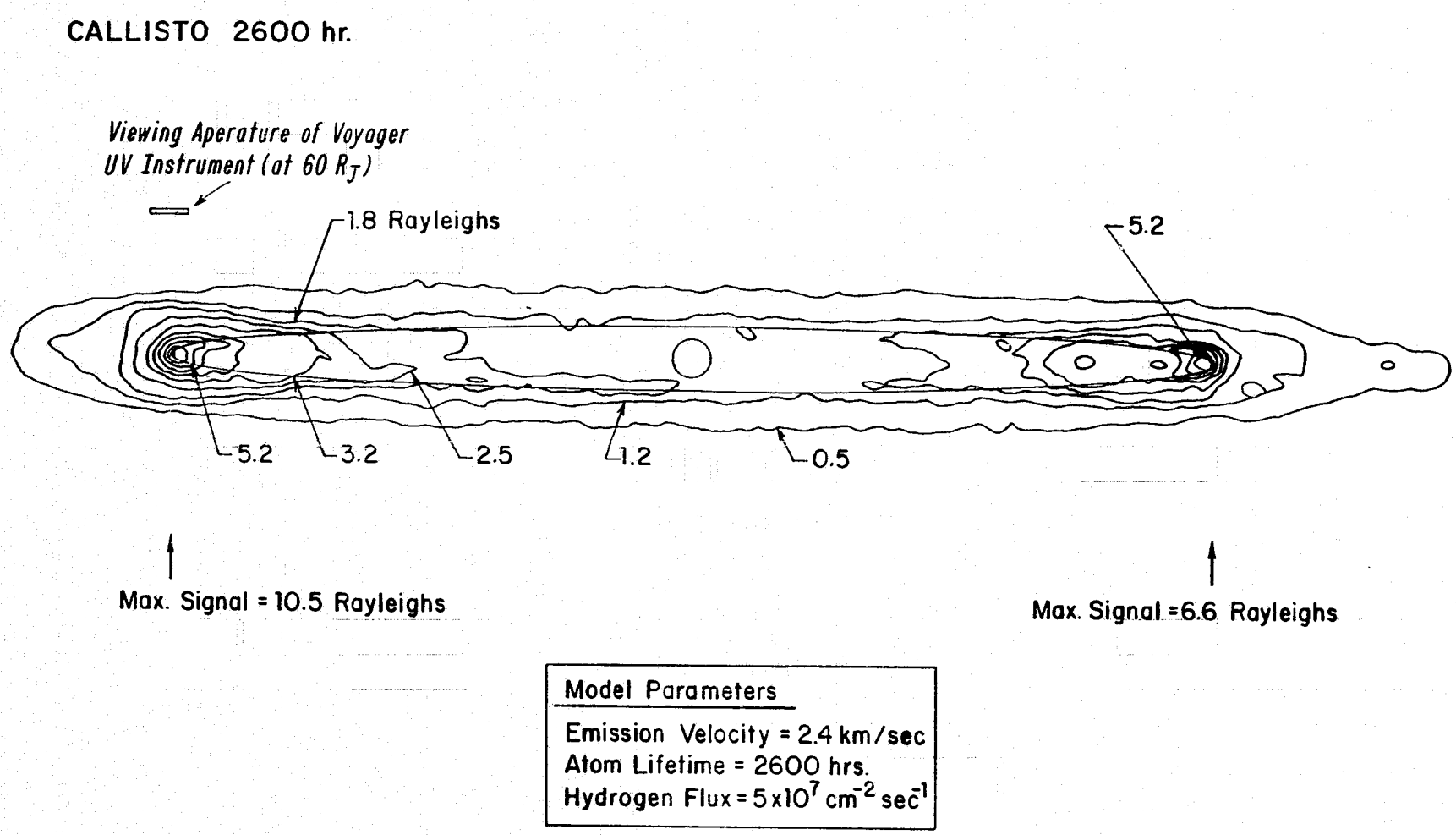

Figure 24

Lyman-α Radiation for Callisto's Extended Hydrogen Atmosphere. Intensity contours, calculated assuming resonance scattering of sunlight and the indicated model parameters, are shown for the satellite orbit plane tilted by 3.254 degrees.

(Voyager's UV instrument detection limit) everywhere except very near the satellite and near the two orbit elongation points. Intensities near the satellite are no larger than about 10 Rayleighs and signals at the elongation points are just at the 5 Rayleigh limit. In the best of circumstances then, detection of the extended hydrogen atmosphere of Callisto is only marginal in the immediate vicinity (one Jovian radius) of the satellite.

The probability of detecting a hydrogen toroidal cloud for Callisto would be considerably improved if the lifetime of H atoms were actually larger than the value adopted here. This would be the case if the proton flux continues to diminish beyond Ganymede's orbit. The lifetime adopted here assumes it is constant. No data is presently available for the radial variation of the low-energy proton flux in this spatial region. Observations of a hydrogen gas cloud for Callisto, significantly brighter and more symmetric than that shown in Figure 24, would be consistent with such a radial behavior.

4.2.4 Results for Titan

The dynamic development of the extended hydrogen atmosphere of Titan is immediate to that of Ganymede and Callisto, for similar emission conditions. Model calculations were performed assuming H atoms to have an initial velocity of 2.0 km/sec at the satellite exosphere (assumed to have a nominal radius of 5000 km). Atoms then emerge from the

Lagrange sphere with a velocity of about 1 km/sec. Estimations of the H atom escape flux from Titan (defined with respect to the satellite surface) range from about 1×10^9 to 4×10^{10} $cm^{-2}sec^{-1}$ (Tabarié, 1974). A value of 1×10^{10} $cm^{-2}sec^{-1}$ has been adopted. Assuming these emission conditions and a hydrogen lifetime of 2300 hours, a column density contour plot of the toroidal hydrogen cloud of Titan is shown in Figure 25 as seen from above the satellite plane. The cloud has a fair amount of circular symmetry except near the satellite where the column density is peaked.

The Pioneer 11 and Voyager spacecrafts will see this cloud more nearly in the satellite plane as shown in Figure 26, where intensity contours, assuming solar resonance scattering, are plotted. The cloud intensity is several hundred Rayleighs near the elongation points of the orbit, where the geometry of the toroidal-shaped atmosphere enhances the gas column length and even 50 to 100 Rayleighs near Jupiter. Such a signal should be detected by the Pioneer 11 spacecraft when viewed through the 1 x 10 degree aperature of its UV instrument. Through the smaller aperature (0.1 x 1 degree) of the UV instrument on the Voyager spacecrafts, the cloud should be detected even if the H atom escape flux from Titan were reduced by a factor of 10 or 100.

In the event that the lifetime of hydrogen atoms near the orbit of Titan is actually significantly smaller than the 2300 hour estimate, a partial toroidal cloud could exist. This is illustrated in Figure 27 for a lifetime of 400 hours. For more energetic emission conditions, the cloud could also

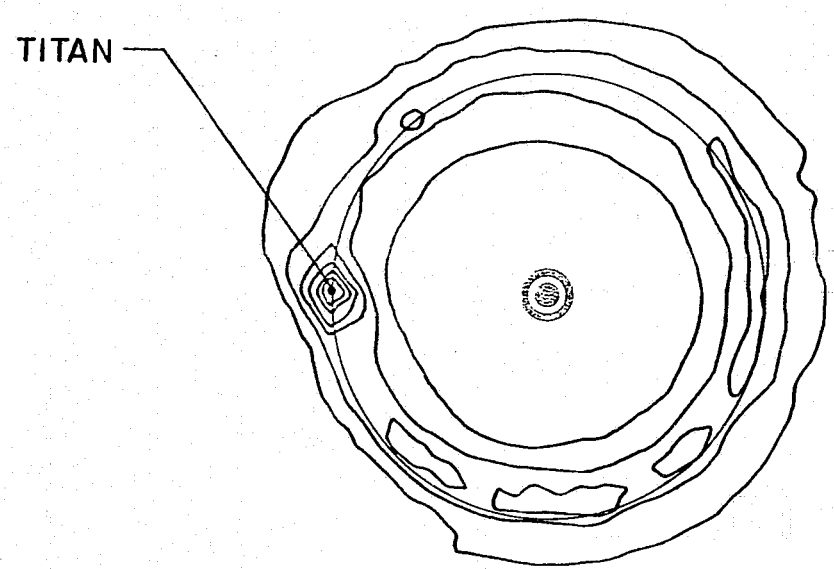

Figure 25

Model for the Extended Hydrogen Atmosphere of Titan. Column density contours, calculated from the cloud model for a 2.0 km/sec emission velocity and a 2300 hour lifetime, are shown as viewed from above the satellite plane.

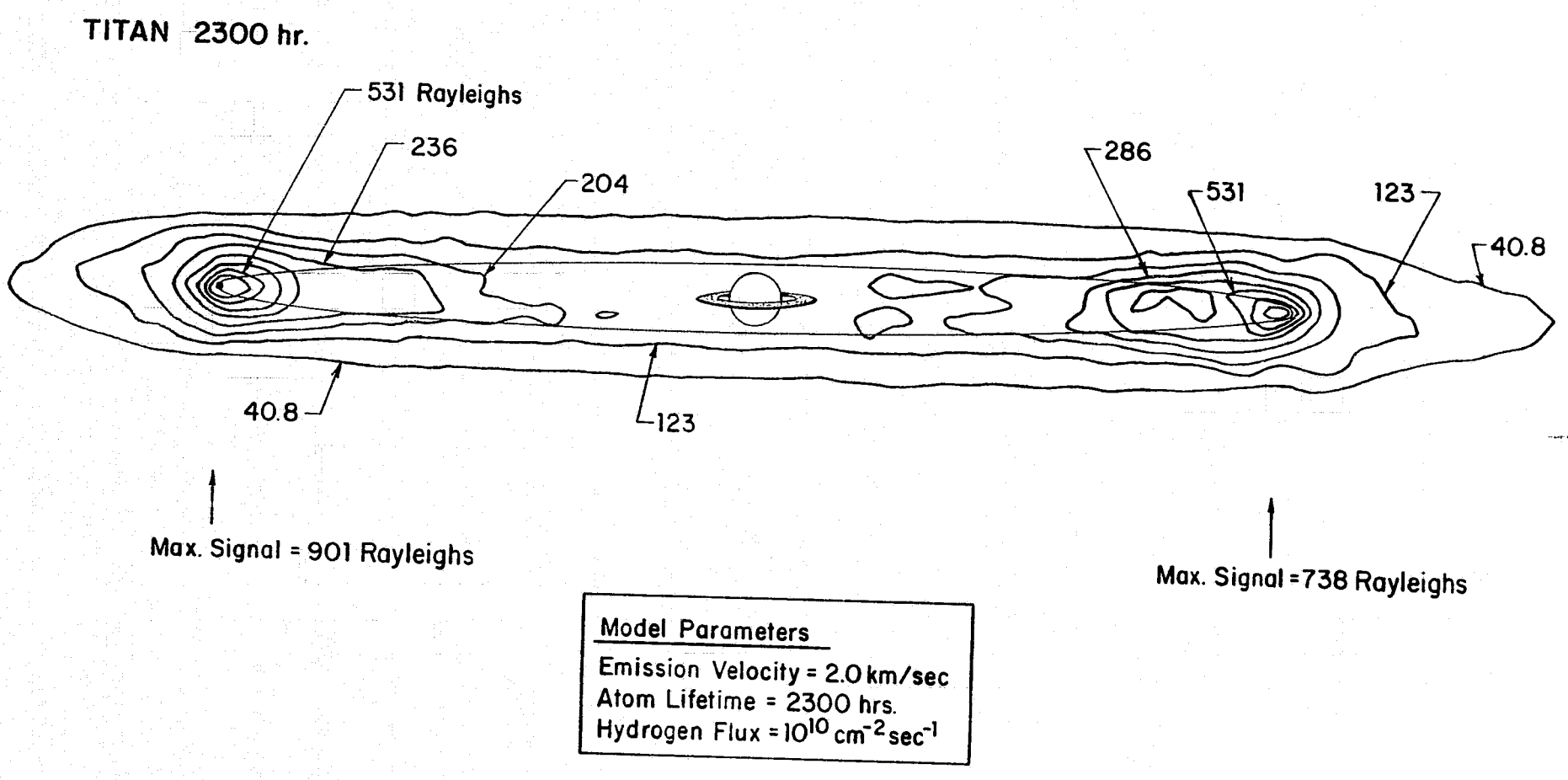

Figure 26

Lyman-α Radiation from Titan's Extended Hydrogen Atmosphere. Intensity contours, calculated assuming resonance scattering of sunlight and the indicated model parameters, are shown for the satellite plane tilted by 3.254 degrees.

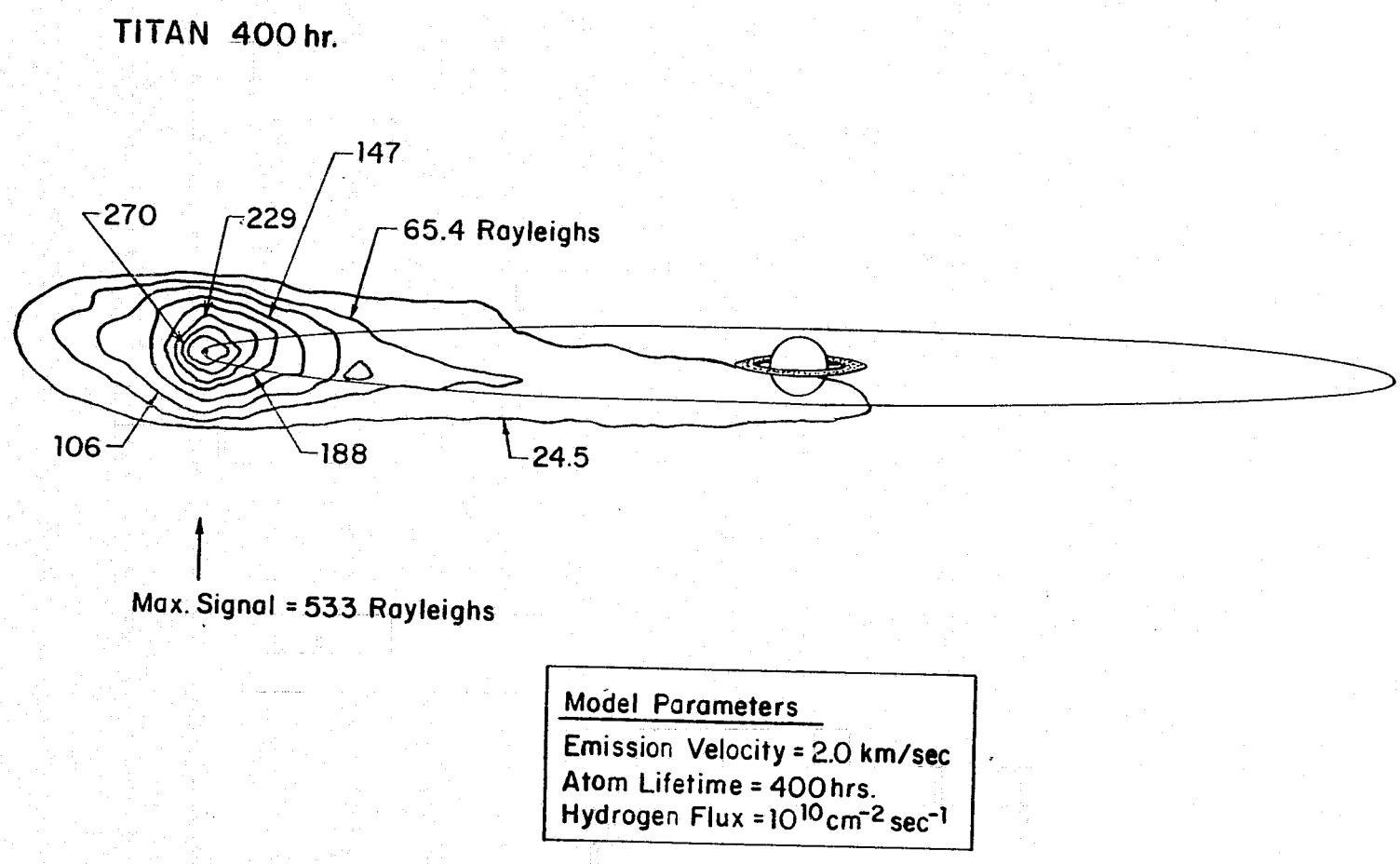

Figure 27

Lyman-α Radiation from Titan's Extended Hydrogen Atmosphere. Same description as Fig. 26.

be complete for this shorter lifetime, although not vertically and cylindrically symmetric. This case is illustrated in Figure 28 for an emission velocity of 2.6 km/sec and a lifetime of 450 hours.

4.3 Ion Sources Created by Extended Satellite Atmospheres

The presence of extended satellite atmospheres of neutral gases may have significant effects upon an existing planetary magnetosphere. Atoms lost from the toroidal atmosphere through ionization processes, could provide a magnetospheric ion source which may locally dominate other ion sources supplied by the planet or by the solar wind. As a first step in understanding this, the initial spatial distribution of ions created by extended satellite atmospheres will be estimated using our cloud model. Results will be presented for the prototype hydrogen clouds of Amalthea, Ganymede, Callisto and Titan discussed in section 4.2 and the sodium cloud of Io modeled by Smyth and McElroy (1978).

4.3.1 Proton Sources

An average radial distribution of hydrogen atoms in an extended satellite cloud may be calculated by integrating over the angular and vertical dimensions of the cloud. Dividing this distribution by the lifetime of the cloud atoms provides a radial distribution for the loss rate of hydrogen atoms. This loss rate distribution for Amalthea, Ganymede

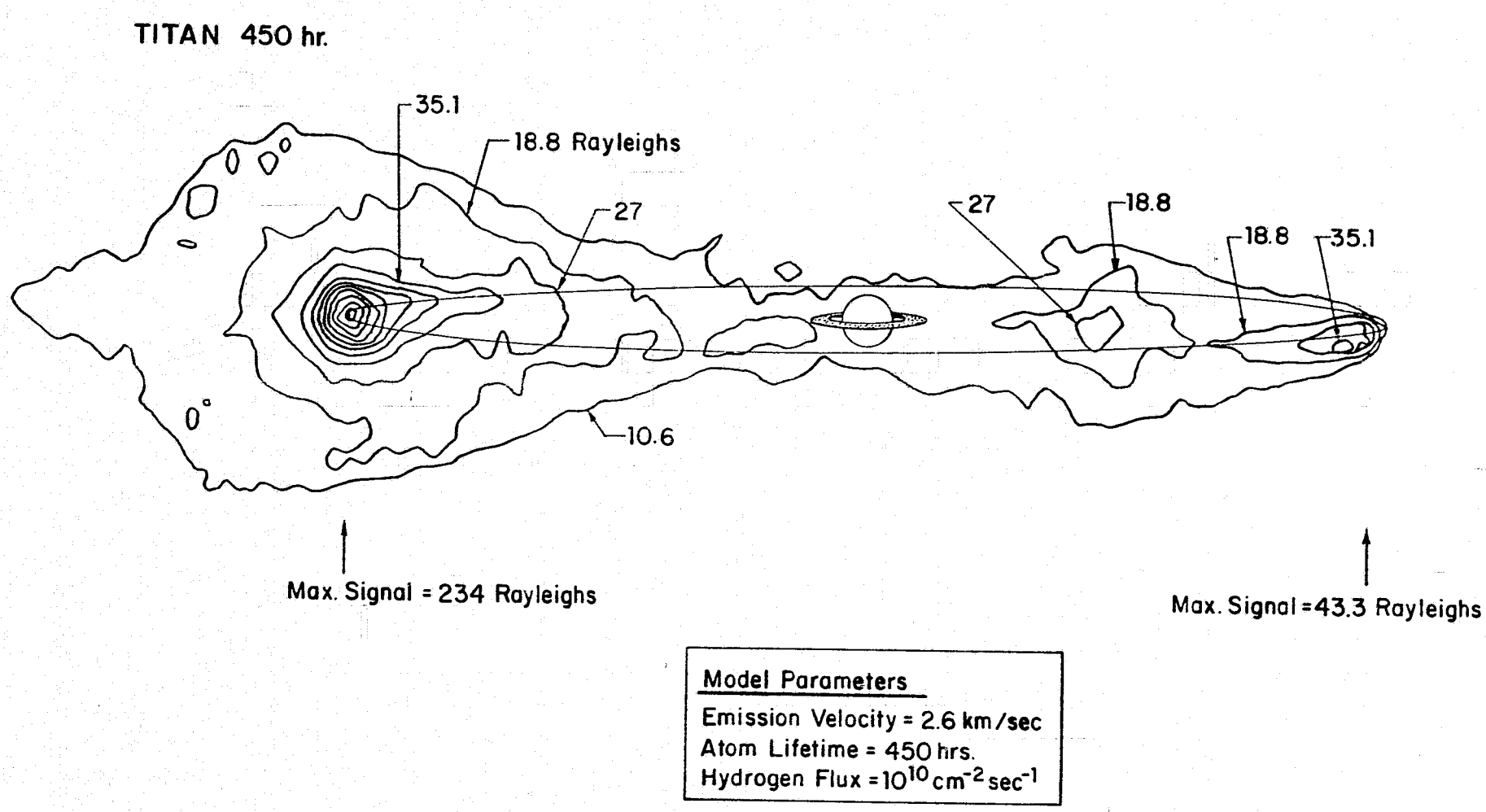

Figure 28

Lyman-α Radiation from Titan's Extended Hydrogen Atmosphere. Same description as Fig. 26.

and Callisto is shown in Figure 29 and corresponds to the modeled extended atmosphere presented, respectively in Figure 12, Figure 20 and Figure 24. The loss rate distribution for Titan is given in Figure 30 and corresponds to the model results shown in Figure 26.

In Figure 29, the maximum hydrogen loss rate per 0.1 Jupiter radii for Amalthea is about a factor of 50 larger than that for Ganymede and about a factor of 100 larger than that for Callisto. For comparison, the maximum value provided by Io's hydrogen cloud (located at 5.9 on the horizontal scale in Figure 29) might be of order 1×10^{26} per 0.1 Jupiter radii per second, but detailed modeling not performed here is needed to more accurately specify this number. Although the loss rate per 0.1 Jupiter radii for Amalthea and Io would be comparable under these circumstances, the total number of hydrogen atoms lost per second by Io would be of order 10 times greater than for Amalthea. In Figure 30, the maximum hydrogen loss rate per 0.1 Saturn radii per second by Titan is about 1.5×10^{26}, with the complete cloud losing about 7.8×10^{27} hydrogen atoms per second.

Assuming a steady cloud state, the hydrogen atom loss rate is the rate at which new protons are introduced into the rotating planetary magnetosphere (assuming it exists for Saturn). If charge exchange is the dominant lifetime process for hydrogen, the introduction of a new proton requires the loss of an old proton, so that only the energy distribution, not the number of protons is changed. A net production of protons will however result from elecron impact

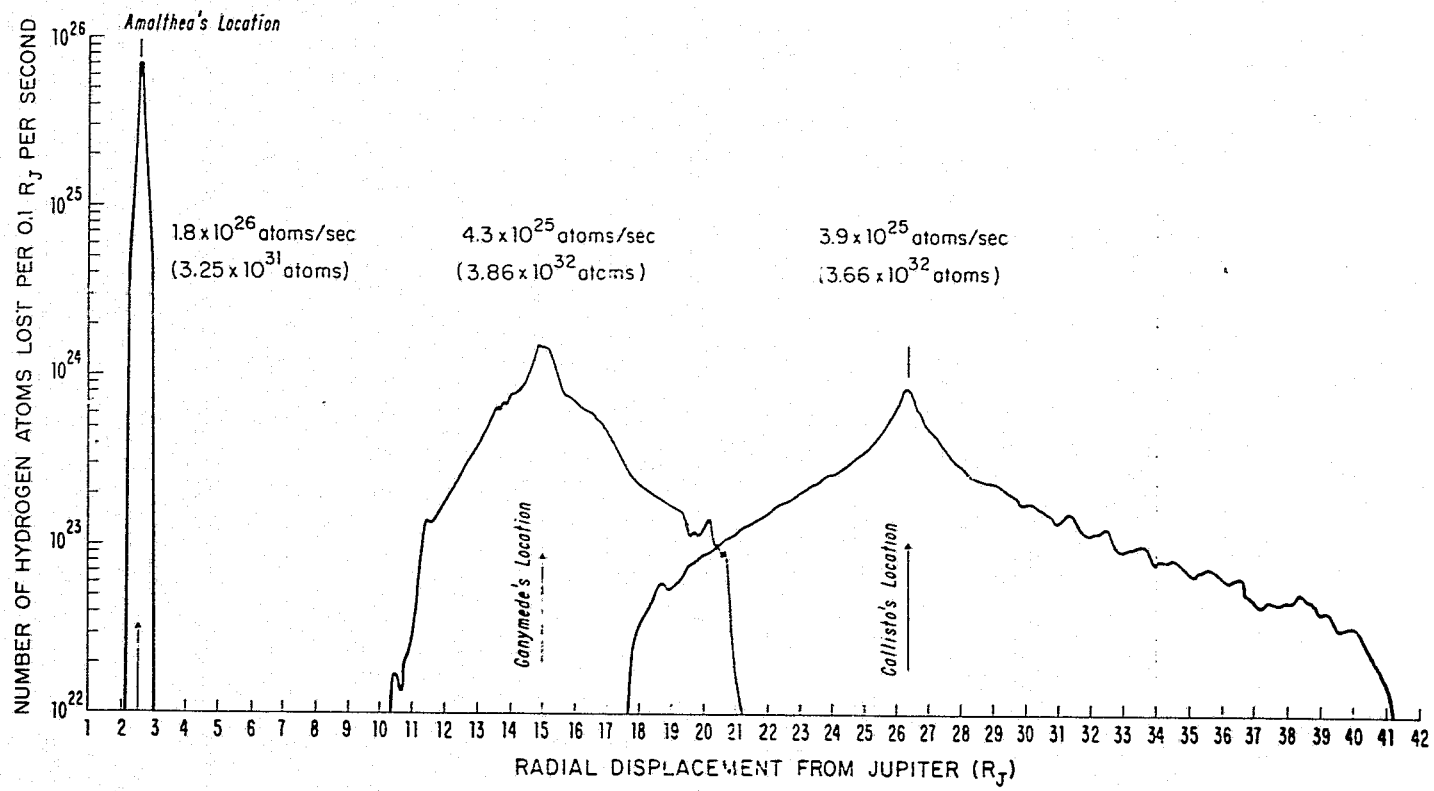

Figure 29

Satellite Proton Source. Model results for the radial distributions of the loss rate of hydrogen atoms from the extended atmospheres of Amalthea, Ganymede and Callisto by charge exchange processes are shown. The total population of each cloud and its overall loss rate are indicated. See the text for discussion.

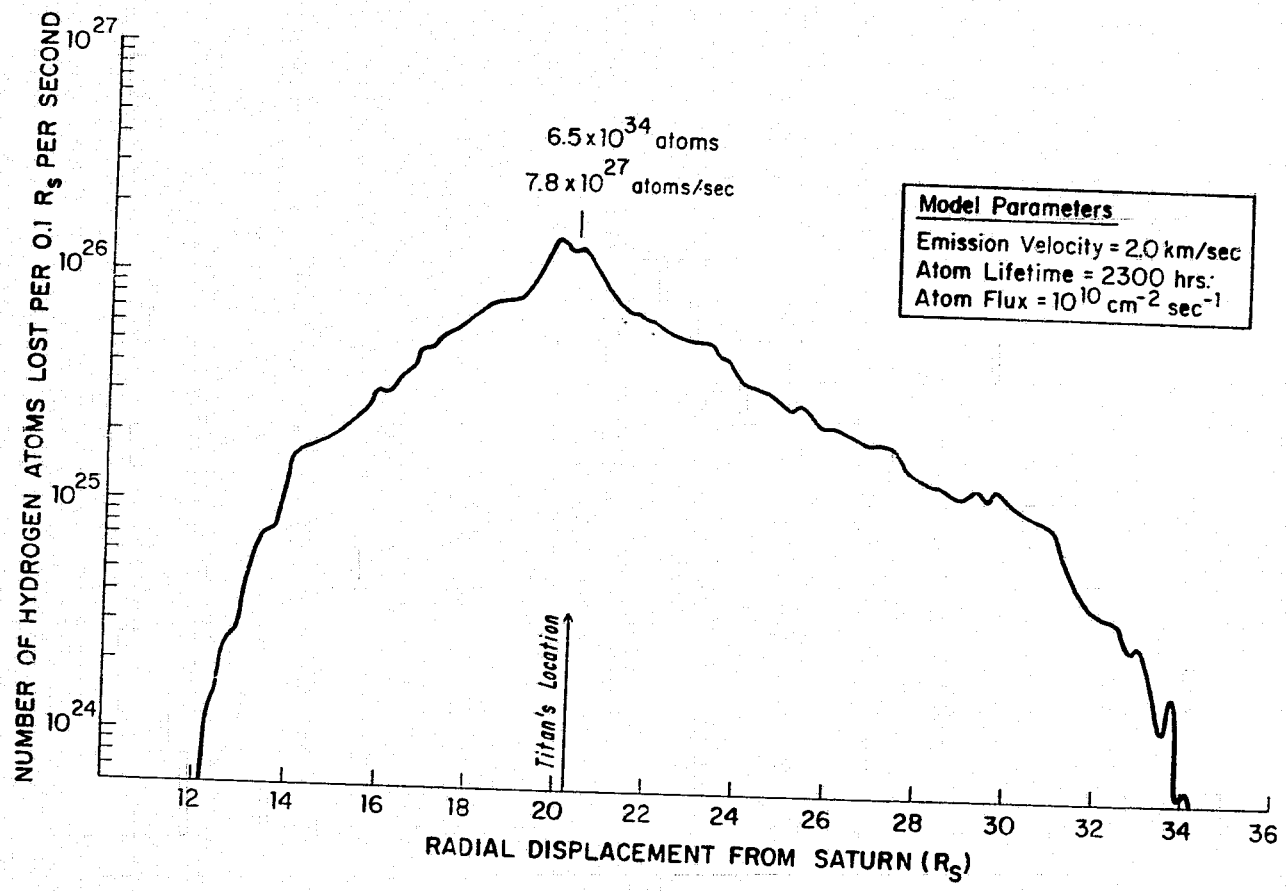

Figure 30

Satellite Proton Source for Titan. Model results for the radial distribution of the loss rate of hydrogen atoms from the extended atmosphere of Titan by charge exchange processes are shown. The total atom population and overall loss rate of the cloud are indicated. See the text for description.

ionization of the extended hydrogen atmospheres, with a rate of approximately 10^{-2} times the charge exchange rate. The neutral atoms released from the charge exchanged process are on gravitational escape orbits from the planet if initially located outside of a critical radius. Those neutral hydrogen atoms initially located inside this critical radius are on gravitational bound orbits of the planet and upon re-ionization may enhance the proton density locally. For Jupiter and Saturn the critical radius (located where the magnetospheric rotational and orbital escape velocities are equal) is 2.83 and 1.86 planetary radii respectively. Such an enhancement is then only possible for the hydrogen cloud of Amalthea where the satellite orbit is 2.54 Jupiter radii.

The impact of the satellite protons on the Jovian magnetospheres needs to be assessed by comparing this source with those provided by the solar wind and the planet. In the case of Titan and Amalthea, the net production of protons could be large enough to inflate the magnetosphere locally and create unique planetary plasmaspheres.

4.3.2 Sodium Ion Source

Models for the sodium cloud of Io (Smyth and McElroy, 1978) suggest that neutral sodium is emitted from the inner hemisphere with a mean initial velocity of 2.6 km/sec and an average hemispherical flux of 10^8 atoms $cm^{-2}sec^{-1}$. Atoms are lost from the extended sodium atmosphere by electron impact ionization with an effective lifetime of

between 15 and 20 hours. The radial distribution for the loss of sodium atoms from the cloud for a 20 hour lifetime is shown in Figure 31. The loss rate has a maximum value of 2.6×10^{24} atoms per 0.1 Jupiter radii per second at the satellite position and the cloud is localized between about 4.2 and 8 Jupiter radii.

For a steady state cloud, Figure 31 gives the radial distribution for production of sodium ions in the Jovian magnetosphere Once formed, the heavy ions are swept away by the rapidly rotating planetary field and become part of the local plasmasphere. Radial diffusion of these heavy ions will then follow and may distribute the ions in such a way so as to produce centrifugal distortion of the Jovian magnetic field.

4.4 Modeling Io's Sodium Line Profile Data

A model capable of calculating the sodium D1 and D2 line profiles generated by Io's extended sodium atmosphere when observed through a given viewing aperature has been developed. The positions and velocities of the satellite, sun and Jupiter may be selected to match a given observation. The modeling parameters are the absolute flux, the distribution of flux on the emitting satellite surface or exosphere, the initial emission velocity distribution and the lifetime of sodium atoms in the Jupiter environment. Preliminary efforts have been directed to understanding the effect that these modeling parameters have upon the line profile shape

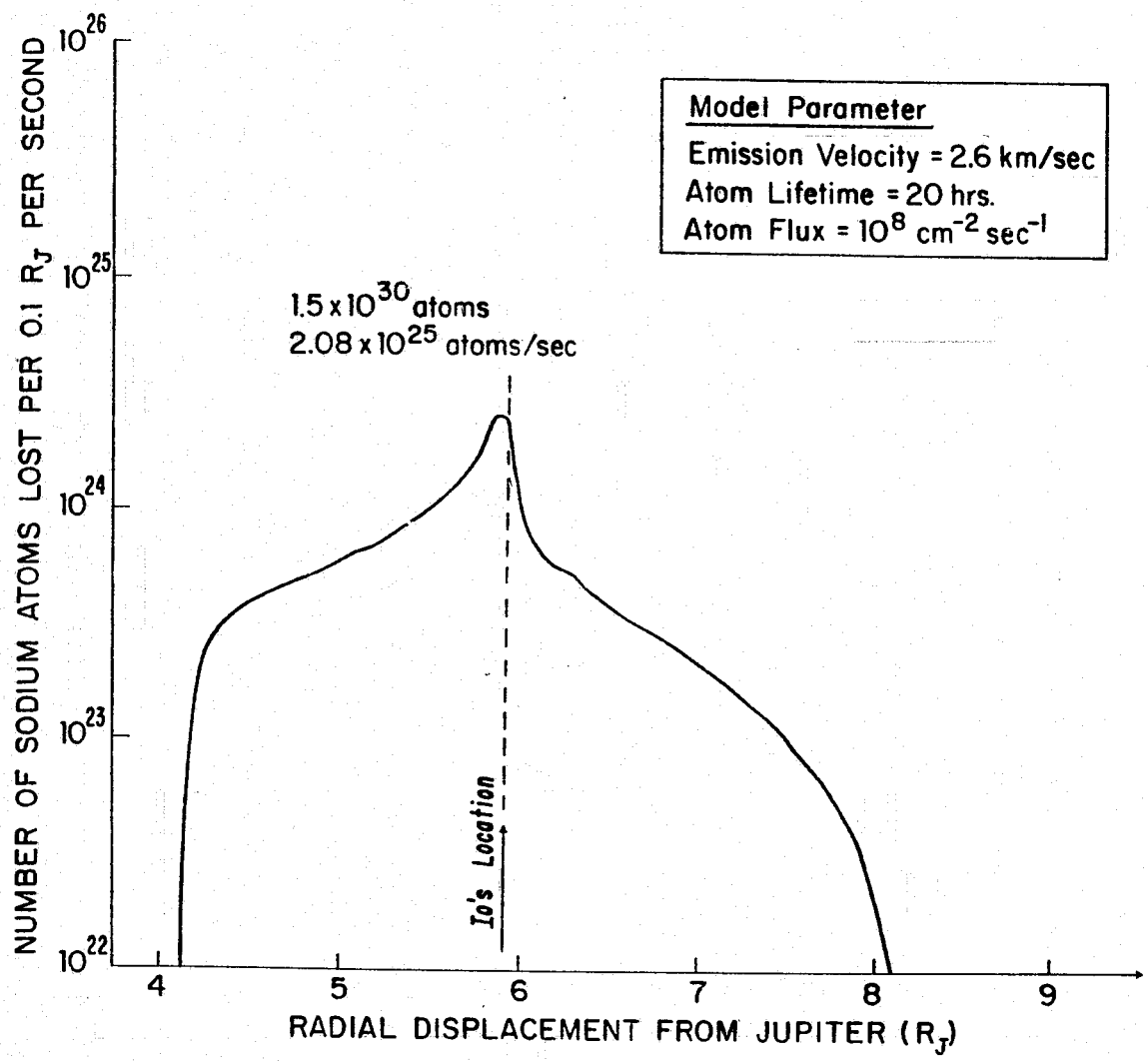

Figure 31

Satellite Sodium Ion Source for Io. Model results for the radial distribution of the loss rate of sodium atoms from Io's extended atmosphere by electron impact ionization processes are shown. The total atom population and overall loss rate of the cloud are indicated. See the text for discussion.

for a variable satellite phase angle.

Comparison of modeled line profiles with existing observations is being used to limit and define the range of the modeling parameters. In addition, a cooperative effort has been established with observers who are making specific measurements needed to test for the presence or absence of particular line profile features generated by model calculations. Progress to date has been most encouraging, but a considerable effort will be required before a consistent and accurate interpretation of the sodium line profile data is available. Efforts to accomplish this line profile modeling goal will be pursued in continuing research work funded by NASA.

CHAPTER V

CONCLUDING REMARKS

Exploratory and Prototype modeling of hypothetical extended hydrogen atmospheres of the outer satellites Amalthea, Ganymede, Callisto and Titan has been presented. These results, given in Chapter IV, were calculated using our cloud model discussed in Chapter III, and a variety of atom lifetime and emission conditions were considered. For the most probable conditions, discussed in Chapters II and III, the extended hydrogen atmosphere of Amalthea forms a tightly-bound partial toroidal-shaped cloud about its planet, whereas Ganymede, Callisto and Titan - having much greater lifetimes - form rather large, complete and nearly symmetric toroidal-shaped clouds. Model results suggest that the partial toroidal hydrogen cloud for Amalthea, tentatively detected by the UV instrument of Pioneer 10 (Judge et al., 1976), could be explained if the satellite atom escape flux is of order 10^{11} $cm^{-2}sec^{-1}$. Results also suggest that the Voyager spacecrafts should be able to detect the Lyman-α emission from the extended hydrogen clouds of Ganymede, Callisto and Titan, assuming most probable conditions, and for Ganymede and Titan even under less favorable conditions.

The initial ion sources, created when cloud atoms of the extended hydrogen atmospheres of Amalthea, Ganymede, Callisto and Titan are ionized, were calculated. These sources, together with the heavy ion source created by the sodium

cloud of Io were presented in Chapter IV. The impact of these ions upon the planetary magnetospheres of Jupiter and Saturn (assuming it exists and includes Titan's orbit) may be significant and warrants detailed investigation.

Progress to date in modeling Io's sodium line profile data is discussed in the last section of Chapter IV. Using our fully-developed cloud model, initial efforts have been focused upon limiting and defining the range of modeling parameters. A variety of sodium observations will be used to accomplish this goal to be pursued in our continuing research work funded by NASA.

Results presented in Chapter IV should be particularly useful for preliminary interpretation of data acquired in 1979 by the Voyager I and Voyager II spacecrafts encountering Jupiter and the Pioneer 11 spacecraft encountering Saturn. In addition to these particular model results, information presented in Chapter III may be used to estimate the spatial extent of any extended satellite atmosphere and to estimate the atom emission and lifetime conditions from spatial extent data measured by spacecrafts. Analysis of such spacecraft data should yield important clues as to the nature of the local or bound satellite atmospheres, the character of the electromagnetic interaction of satellites with their planetary magnetospheres and the concentration, energy density and spatial distribution of charged particles in the magnetospheres.

Acknowledgements - Computer time for model calculations provided by the National Center for Atmospheric Research, which is sponsored by the National Science Foundation, is gratefully acknowledged.

REFERENCES

Barker, E. S., "Progress Report: Copernicus Observations of Solar System Objects." Presented at the 8th Annual Meeting of the American Astronomical Society Division for Planetary Sciences, January 19-22, 1977, Honolulu, Hawaii.

Broadfoot, A. Lyle, private communication (1978).

Brown, R. A., "Optical Line Emission from Io.", Exploration of the Planetary System: Proceedings I. A. U. Symposium No. 65, Torun, Poland, September 5-8, 1973 (Eds. Woszczyk and Iwaniszewska), pp. 527-531. D. Reidel Publishing Co., Dordrecht, Boston (1974).

Brown, R. A., "Measurements of S II Optical Emission from Jupiter's Thermal Plasma.", Astrophys. J. (Letters) 224, L97 (1978).

Carlson, R. W. and Judge, D. L., "Pioneer 10 Ultraviolet Photometer Observations at Jupiter Encounter.", J. Geophys. Res. 79, 3623 (1974).

Carlson, R. W., Matson, D. L., Johnson, T. V. and Bergstralh, J. T., "Sodium D-Line Emission from Io: Comparison of Observed and Theoretical Line Profiles.", Astrophys. J. 223, 1082 (1978).

Fang, T.-M., Smyth W. H. and McElroy, M. B., "The Spatial Distribution of Long Lived Gas Clouds Emitted by Satellites in the Outer Solar System.", Planet. Space Sci. 24, 577 (1976).

Frank, L. A., Ackerson, K. L., Wolfe, J. H. and Mihalor, J. D., "Observations of Plasmas in the Jovian Magnetosphere.", J. Geophys. Res. 81, 457 (1976).

Judge, D. L., Carlson, R. W., Wu, F. M. and Hartmann, U. G., "Pioneer 10/11 Ultraviolet Photometer Observations of the Jovian Satellites." Jupiter, Studies of the Interior, Atmosphere, Magnetosphere and Satellites (Ed. Gehrels), p. 1068. The University of Arizona Press, Tucson (1976).

McDonough, T. R. and Brice, N. M., "A Saturnian Gas Ring and the Recycling of Titan's Atmosphere.", Icarus 20, 136 (1973).

Münch, G., Trauger, J. and Roesler, F., "Interferometric Studies of the Emissions Associated with Io.", Bull. AAS 8, 468 (1976).

Münch, G., Trauger, J. T. and Roesler, F. L., "A Search for the H_2 (3,0) S1 Line in the Spectrum of Titan.", Astrophys. J. 216, 963 (1977).

Murcray, F. J. and Goody, R., "Pictures of the Io Sodium Cloud.", Astrophys. J. 226, 327 (1978).

Siscoe, G. L., "Magnetosphere of Saturn.", The Saturn System (Ed. Hunten and Morrison), NASA CP-2068, p. 265 (1978)

Smyth, W. H. and McElroy, M. B., "Io's Sodium Cloud: Comparison of Models and Two-Dimensional Images.", Astrophys. J. 226, 336 (1978).

Smyth, W. H. and McElroy, M. B., "The Sodium and Hydrogen Gas Clouds of Io.", Planet. Space Sci. 25, 415 (1977).

Tabarié, N., "Atomic Hydrogen Distribution.", The Atmosphere of Titan (Ed. Hunten), NASA SP-340, p. 123 (1974).

Trafton, L., "Detection of a Potassium Cloud near Io.", Nature 258, 690 (1975).

Trauger, J., Roesler, F. and Münch, G., "Velocity Structure in the Sodium Emission from Io.", Bull. AAS 8, 468 (1976).

Wu, F. M., Judge, D. L. and Carlson, R. W., "Europa: Ultraviolet Emission and the Possibility of Atomic Oxygen and Hydrogen Clouds.", Astrophys. J. 225, 325 (1978).

Yung, Y. L. and McElroy, M. B., "Stability of an Oxygen Atmosphere on Ganymede.", Icarus 30, 97 (1977).