General Disclaimer

One or more of the Following Statements may affect this Document

- This document has been reproduced from the best copy furnished by the organizational source. It is being released in the interest of making available as much information as possible.

- This document may contain data, which exceeds the sheet parameters. It was furnished in this condition by the organizational source and is the best copy available.

- This document may contain tone-on-tone or color graphs, charts and/or pictures, which have been reproduced in black and white.

- This document is paginated as submitted by the original source.

- Portions of this document are not fully legible due to the historical nature of some of the material. However, it is the best reproduction available from the original submission.

Produced by the NASA Center for Aerospace Information (CASI)

NASA Technical Memorandum 79182

(NASA-TM-79182) THE ROLE OF FUEL CELLS IN NASA'S SPACE POWER SYSTEMS (NASA) 11 p HC A02/MF A01 CSCL 22B
N79-23133
Unclas
G3/20 22084

THE ROLE OF FUEL CELLS IN NASA'S SPACE POWER SYSTEMS

Julian F. Been
Lewis Research Center
Cleveland, Ohio

Prepared for the
Fourteenth Energy Conversion Engineering Conference
Boston, Massachusetts, August 5-10, 1979

THE ROLE OF FUEL CELLS IN NASA'S SPACE POWER SYSTEMS

Julian F. Been
National Aeronautics & Space Administration
Lewis Research Center
Cleveland, Ohio, 44135

ABSTRACT

The advances in fuel cell technology which have expanded the capabilities of the fuel cell from that of power generation to include energy storage also expanded its potential role in space power systems. This paper will present a brief evolutionary history of the fuel cell technology and compare this with NASA's increasing space power requirements. The role of fuel cells will be put in perspective with other energy storage systems applicable for space using such criteria as type of mission, weight, reliability, costs etc. Potential applications of space fuel cells with projected technology advances will be examined.

BACKGROUND

The role that fuel cells will have in NASA's space power programs will be determined to a large extent by how well they can meet the power requirements of missions projected through the next two decades. This applies to the capabilities of the fuel cell as a primary power source as well as its emergence as an energy storage subsystem. With the advent of the space transportation system (STS) it is expected that the space power required for projected missions will increase to multi hundred kilowatt levels. Planned space missions which would require such large power levels include industrial processing, medical and scientific research, public service, communication and others. The space fuel cell after its emergence as a primary power source in the early 1960's has had, and continues to have, a steady and evolutionary technical growth. It very successfully provided the electrical primary power for the Gemini and Apollo programs and now must be examined as to its role in the new large projected space power systems. It is expected that the large level of effort being directed to the development of fuel cells for terrestrial applications will indirectly impact the space fuel cell technology and possibly affect its projected role in future space missions.

FUEL CELL STATUS

The state of the art fuel cell today is largely the product of technology development efforts aimed at meeting particular mission requirements in a particular time frame, i.e., to place a man on the moon in the 1960's. Although the principle of the fuel cell was discovered over a century ago it took a particular space application to bring it from a laboratory concept to a reliable multi kilowatt operating power generating system. Fuel cells were developed in the early 1960's because the reliable and space proven battery power systems would not meet the launch-weight requirements of the Apollo mission as performed. Apollo had received a national commitment, and since the fuel cell was recognized as an enabling technology, the necessary manpower and funding was applied to the fuel cell development program. The technology advancement was remarkable when it is considered that in less than ten years it was taken from its status in the early Gemini program of approximately 100 hours of systems operational capability to several thousand hours (1*). After this major step in technology advancement the fuel cell became a more matured technology and made a steady technology growth towards lighter weight, higher specific power, lower cost, and longer life. As indicated above, the early fuel cell development funding for the Gemini and Apollo missions rose sharply in the mid 1960's to over twenty million dollars, peaked during Apollo and then declined to a base technology level of effort after Skylab. Much of the funding was for hardware during the major space flight programs.

The manned space program required a higher energy density electrical power system than existing batteries could provide at the time so in the early 1960's an accelerated fuel cell development program was begun. The technology approach to the space fuel cell development was to utilize parallel efforts in competing technologies carried out by different contractors. The technologies included the Bacon cell, IEM cell, (Ion Exchange Membrane) capillary matrix and the S.P.E. (Solid Polymer Electrolyte). Figure 1 (1) shows the competing technologies and associated space programs in the time frame from 1962 to present. The Gemini fuel cell program demonstrated that the electrical requirements for a long duration manned mission could be met. The program ended in 1966. It was also during this period that development work on the Apollo fuel cell was being done. Reference "1" points out that due to the rigorous schedule of Gemini and Apollo, all technical goals were not met and some compromises had to be made. The principle compromise from the original specifications was the non usability of the fuel cell product water due to membrane degradation. This was also the life limiting element of these fuel cells. In 1966 the fuel cells were qualified to 400 hours of operation and by 1969, at the completion of the program, the cells were qualified to 1000 hours. Figures 2 and 3 display the impressive cell technology advancement made from 1960 to today's state-of-the-art space fuel cells. Figure 2 shows the dramatic decrease in the specific cost (dollars per kilowatt) while Figure 3 shows an equally significant decrease in specific weight (pounds per kilowatt) during the same time span. The specific weight decreased from 89 lbs. per kilowatt for Apollo to 8 lbs. per kilowatt for the Shuttle Orbiter (2). The advanced light weight fuel cell has potentially greater specific weight reduction to four lbs/kilowatt. During this same period in which large reductions in specific weight and specific cost were achieved, Figure 4 illustrates the increases in performance capability from 100 to over 2500 hours with present potential for considerably longer operational times of 10,000 hours.

The fuel cell, when put in perspective, has come from a proven laboratory concept to a mature reliable special duty power source for space operations in a relatively short time span. Its maturity was accelerated by the technical requirements of manned space flight within a demanding time frame. The fuel cell effort is a competitor with other special-duty primary sources for use on future missions. It should be pointed out that although the requirements are not space oriented, a similar fuel cell accelerated development effort is being carried out for terrestrial applications. The funding and manpower are again commensurate with the national commitment of solving energy needs. The level of funding of the terrestrial research, development and demonstration

* Numbers in parentheses designate References at end of paper.

is, in fact, several fold larger than the Apollo effort. The technical advancements made in this effort could very well be applied to the space fuel cell and enhance its competitive role for future missions.

PROJECTED SPACE POWER REQUIREMENTS IN SPACE

In order to evaluate the future role of fuel cells in space the projected missions must be reviewed to determine if the advantages that made the fuel cells an enabling technology for manned space programs are still applicable. Up to now the automated spacecraft launched by the U.S., have far outnumbered the manned missions previously mentioned and will continue to dominate the future mission scenario until the largespace station class of missions are initiated in the 1980's. These spacecraft have not been large electric power consumers however, as evidenced by the total accumulative power launched to date by the U.S. non military being only in the neighborhood of 100 kilowatts (3). Solar cell/battery systems have been the power sources for the majority of these and will continue to be in the future. Present fuel cell technology suggests that fuel cells may be more applicable to the larger, higher power space missions.

The next major step in man's utilization and exploration of space will be the first flight of the Space Shuttle. This will signal the start of the development of a space transportation system which will provide capabilities that were not possible before. It will allow use of the unique qualities of space to meet commercial, scientific and industrial needs. While the initial space power requirements for early shuttle flights will be on the order of tens of kilowatts, projected missions such as the space construction base will require hundreds of kilowatts. Figure 5 illustrates the projected NASA space power requirements over the next two decades (4). In the early 1980's the projected power requirements are in the 25 KW range where the missions include the orbiter/spacelab, science and technology, experimental life sciences and materials processing. By the late 1980's and early 1990's the projected power demand will be in the hundreds of kilowatts involving missions such as space manufacturing and processing, public services, pharamaceuticals and space construction (4,5). In the late 1990's power projections are in the megawatts range. The fuel cell plays a major role in the mission planning since it is the power source for the shuttle orbiter and the proposed power source for the avionics package on the orbit transfer vehicle (OTV). However, the missions shown in Figure 5 that have very large power requirements do not in general have the same unique requirements that made the fuel cell an enabling technology for the Apollo missions and for shuttle power. For these proposed missions, photovoltaic power sources have been baselined because of their long life, light weight, reliability and access to an unlimited source of energy. The Shuttle fuel cells are designed to furnish electrical power to payloads in the Shuttle Bay, as well as for life support and "housekeeping" functions. It was recognized rather early that the limited capability of the Shuttle fuel cells to furnish 12 kilowatts peak or 7 kilowatts continuous for approximately a week would not allow sufficient power for planned payloads in the Shuttle bay, such as Spacelab. This led to several studies to determine the most effective approach to augumenting Shuttle power. One study looked at the feasibility of adding fuel cell kits in the Shuttle bay, while the other two considered fold up solar arrays which were to be stored in the bay until orbit was established and then would be deployed (7,8). It was decided that the preferred approach was solar arrays and that an interim Power Extension Package (P.E.P.) would be developed followed by a free flyer-25 kilowatt Power Module. To better appreciate the power that would be available to user equipment for a Spacelab Mission on board Shuttle, Figure 6 illustrates what power each of the approaches could provide. The photovoltaic systems offer advantages over the fuel cell because they reduce the weight and volume penalties of the cryogenic units in the Shuttle bay. It is not the purpose of this paper to discuss the detailed merits of one type subsystem over another but rather to point out that other than for the power required for the space transportation itself, including the orbit transfer vehicle, fuel cells as primary power are limited in their applications for other systems.

FUEL CELLS AS ENERGY STORAGE UNITS

As pointed out previously the solar photovoltaic systems have advantages over fuel cells as primary power sources for the large projected space power systems. However, recent technology advances in lighter weight, longer life and higher efficiency fuel cells and electrolyzers have expanded their role as an energy storage element. As energy storage subsystems they are becoming competitive with the more established battery subsystems and may find a much larger role in this capacity than as a primary space power source. When operating in the storage mode it is required that there must be a fuel cell process and an electrolysis process. Two approaches are being pursued; one utilizes a fuel cell and a separate dedicated electrolyzer unit; the other utilizes a single unit which has reversing capability, becoming an electrolyzer on the alternate cycle of operation. The first approach which has the second separate electrolyzer has considerably more experience and is much closer to being state-of-the-art. The single unit development is a high risk technology.

There are also acid (SPE) and alkaline (KOH) type fuel cells and electrolyzers with Hydrogen-Oxygen and Hydrogen-Chlorine fuels, however the one that has the most experience is the H_2O_2 system. As a derivative of the fuel cell and electrolysis technology, the DOE has supported work on H_2Cl_2 and H_2Br_2 regenerative storage systems. These may find use in future space energy storage applications. The H_2O_2 has the advantage that the fuel elements have other uses other than strictly energy storage. Figure 7 is a schematic of a H_2O_2 fuel cell system with a dedicated electrolyzer. Briefly, the fuel cell furnishes power to the load during the eclipse by the combining of the hydrogen and oxygen. The product water is pumped to the electrolyzer units where electrical energy from the solar array during sunlight is used to electrolyze the water back into its constituent gases and stores them for the next eclipse. For future mission applications this subsystem must compete with NiCd batteries with proven reliability and with more advanced NiH_2 light weight batteries. Comparisons are difficult because consistent data on NiCd batteries is not readily available. NiH_2 has not had extensive experience and performance data on it is limited. The fuel cell with dedicated electrolyzer has been tested only on a cell and partial unit basis.

Nevertheless studies have been done and comparisons have been made (9, 10). A more indepth study was made in-house at the Johnson Space Center (11) where the three types of energy storage systems; NiCd, NiH_2 and fuel cells with dedicated electrolyzers were compared at three space power levels 35Kw, 100Kw, and 250 Kw. This study was a technical comparison and did not include cost elements. The Lewis Research Center is planning a cost-technology study for the same electrochemical energy storage subsystems over similar power levels.

All three of these studies agree that the fuel-cell electrolyzer storage system is competitive and has lower total subsystem weight than either the NiCd or NiH_2 subsystems. However, the DOE and Electric Power Research Institute are funding a significant national effort to develop higher energy density batteries that operate at higher temperatures in the range of 300-500°C. The resultant findings may challenge the status of present energy storage subsystems for future space power systems. The NASA technical effort at Lewis Research Center, Johnson Space Center and Marshall Space Flight Center is aimed at reducing the cost, increasing the efficiencies and reliability, and should further enhance the space fuel cells' role in the energy storage area.

SUMMARY

The fuel cell today is an operational and reliable electrochemical power source. It was developed for NASA's manned missions in the 1960's because the conventional battery systems could not meet the energy density requirements. Although it was an enabling technology for the Apollo program, future space missions over the next two decades have different constraints which makes the fuel cell less applicable as a primary power source. The power level of these projected missions are in the multi-hundreds of kilowatts and are baselined as photovoltaic/battery power systems. The major role for the fuel cell as a space power source is in the space transportation system. i.e., the shuttle orbiter and the orbit transfer vehicle. While the role of the fuel cell as a primary source for space power appears limited, it may have a much larger role as an energy storage subsystem. Major technical advances from either the present NASA development efforts or from the large terrestrial technical efforts could enhance its competitive position in both roles. Present studies have shown that the H_2O_2 Space fuel cell with a dedicated electrolyzer can be competitive with NiCd and NiH_2 batteries as energy storage subsystems for large space power system applications.

REFERENCES

1. H. McBryar, "Technology Status-Fuel Cells and Electrolysis Cells," Future Orbital Power Systems Technology Requirements, NASA CP-2058, 1978, pp. 167-194.

2. J.S. Fordyce, "Technology Status-Batteries and Fuel Cells," Future Orbital Power Systems Technology Requirements, NASA CP-2058, 1978, pp. 157-166.

3. J.P. Mullin, "OAST Space Power Technology Program," Future Orbital Power Systems Technology Requirements, NASA CP-2058, 1978, pp. 1-16.

4. J.H. Disher, "Space Transportation, Satellite Services and Space Platforms," Astronaut. & Aeronaut., Apr. 1979, pp. 48-67.

5. "OAST Space Systems Technology Model 1980-2000," National Aeronautics and Space Administration, Washington, D.C., Oct. 1978.

6. "Auxiliary Payload Power System Study, Vol.1-Executive Summary," McDonnell Douglas Astronautics Co. St. Louis, Mo., MDC E1466, Feb. 1976. Final Report to NASA, MSFC Contract No. NAS8-31361.

7. "Orbital Service Module Systems Analysis Study Documentation, Vol. 2-Technical Report," McDonnell Douglas Astronautics Co., Huntington Beach, Calif., MDC G7555, Dec. 1978. Report to NASA, JSC Contract No. NAS9-15532.

8. "25 Kw Power Module Evolution Study, Vol. 4: Design Analysis, Part III: Conceptual Designs for Power Module Evolution," Lockheed Missiles & Space Co., Sunnyvale, Calif., LMSC D614944-4, Jan. 1979. Final Report to NASA, Contract No. NAS8-32928.

9. "Space Station Systems Analysis Study, Part 3: Documentation, Vol. 7: SCB Alternate EPS. Evaluation, Task 10," McDonnell Douglas Astronautics Co., MDC G6954, Sys. 1977. Report to NASA, JSC, Contract No. NAS9-14958.

10. "Space Station Systems Analysis Study, Part 3: Addendum, Vol. 5: Power System Technical Report," Grumman Aerospace Corp., Bethpage, N.Y., NSS-SS-RP025, Aug. 1977. Final Report to NASA, MSFC, Contract No. NAS8-31993.

11. J.B. Trout, "Energy Storage for Low Earth Orbit Operations at High Power," Presented at the Conference on Advanced Technology for Future Space Systems, AIAA, Hampton, Va. May 8-11, 1979.

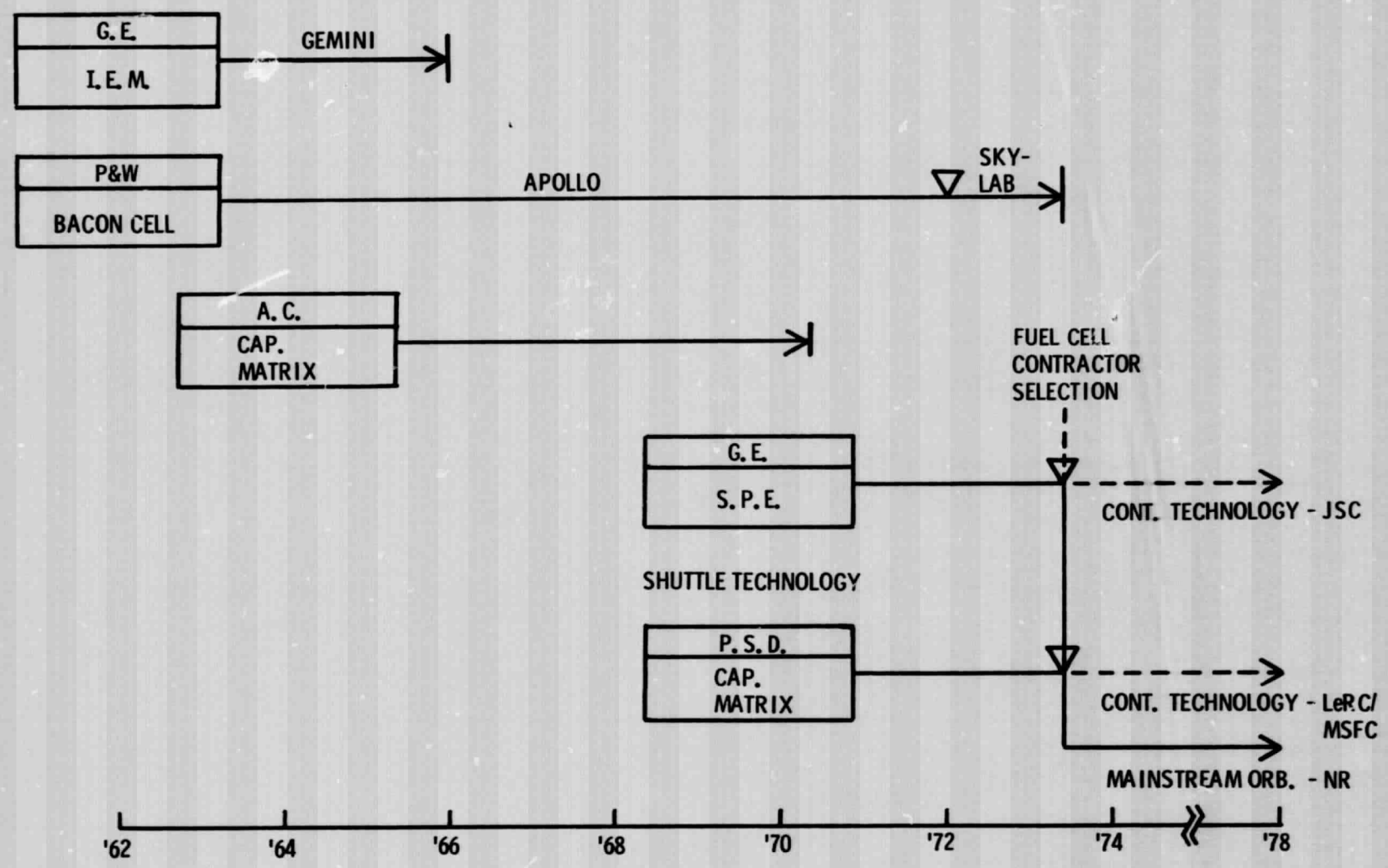

Figure 1. - Fuel cell programs.

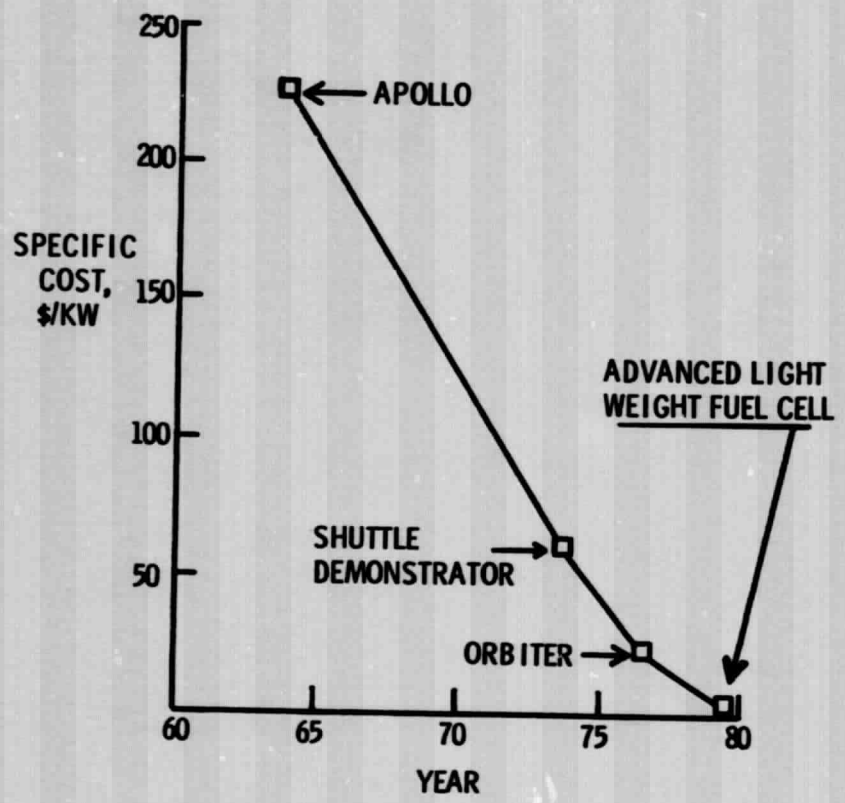

Figure 2. - Specific cost of fuel cell from 1960 to present.

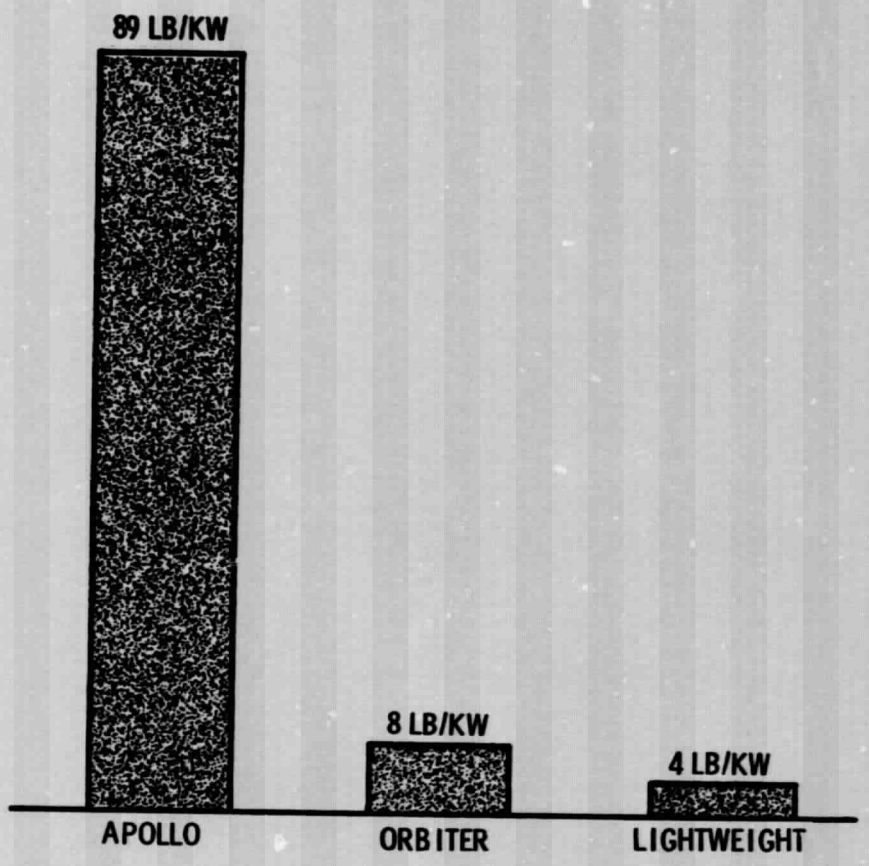

Figure 3. - Fuel cell weight comparison.

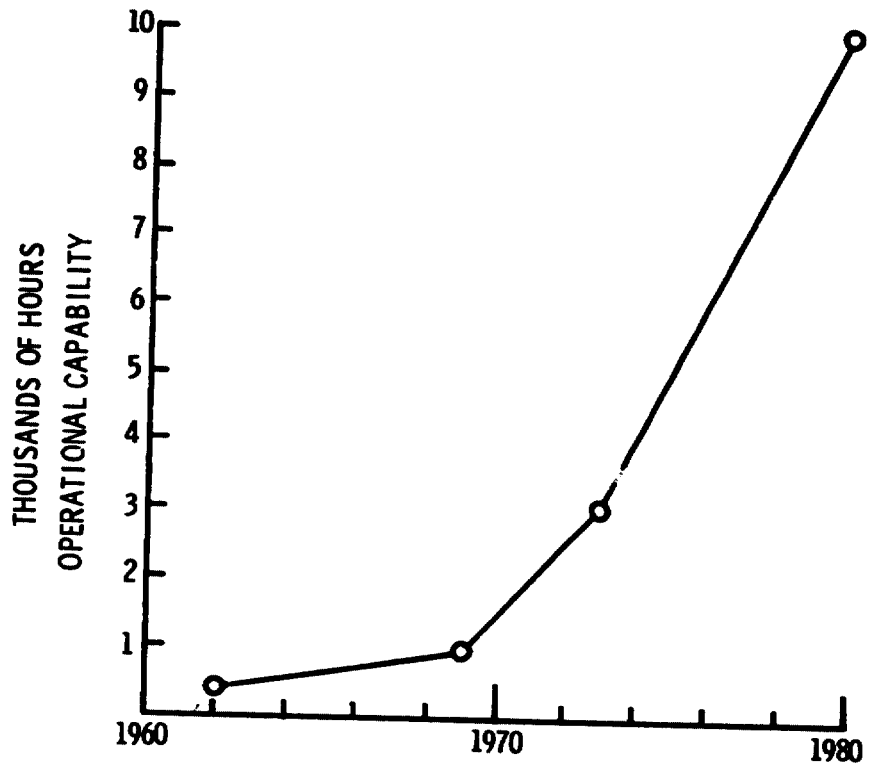

Figure 4. - Progress in operational capability.

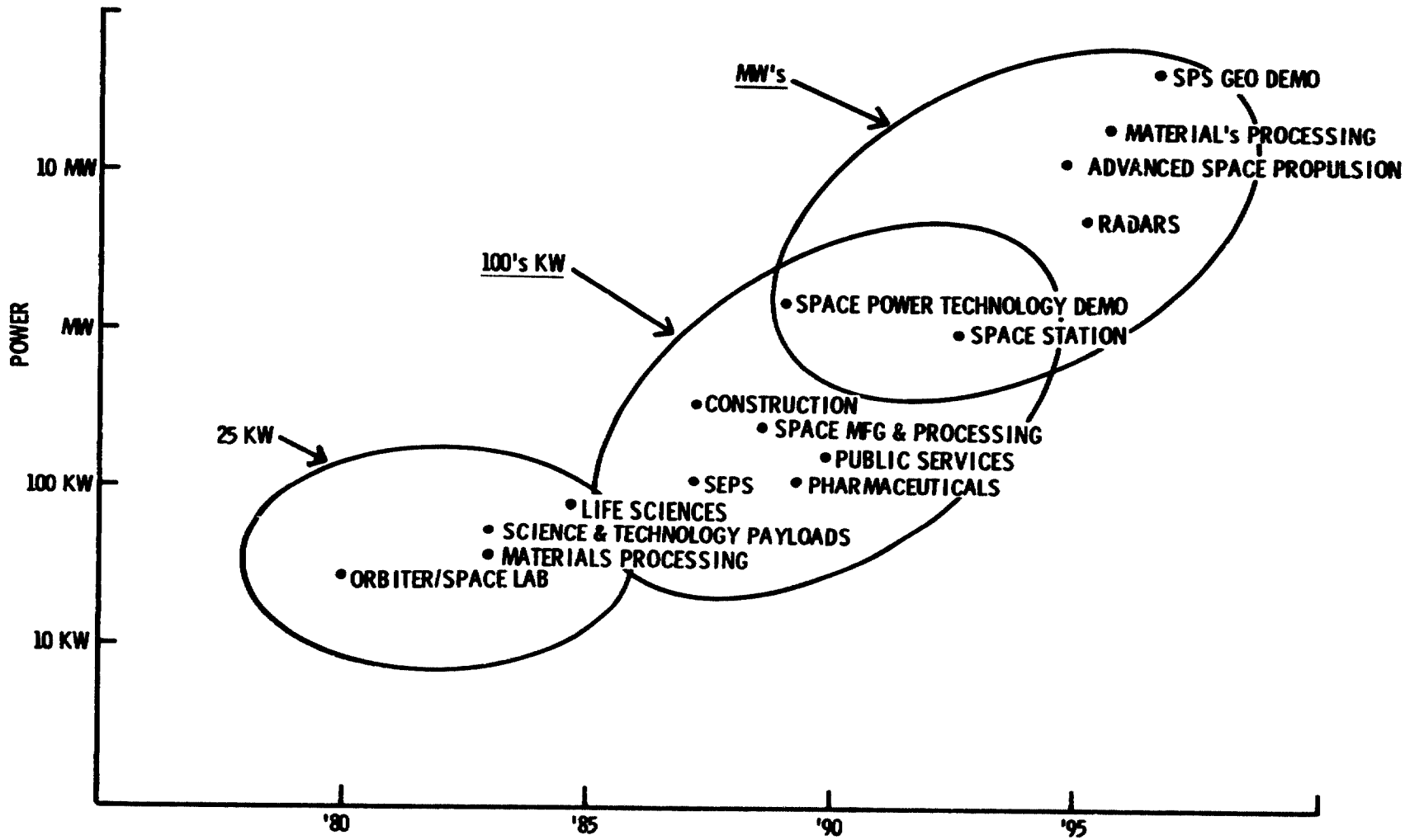

Figure 5. - Projected demand for space power.

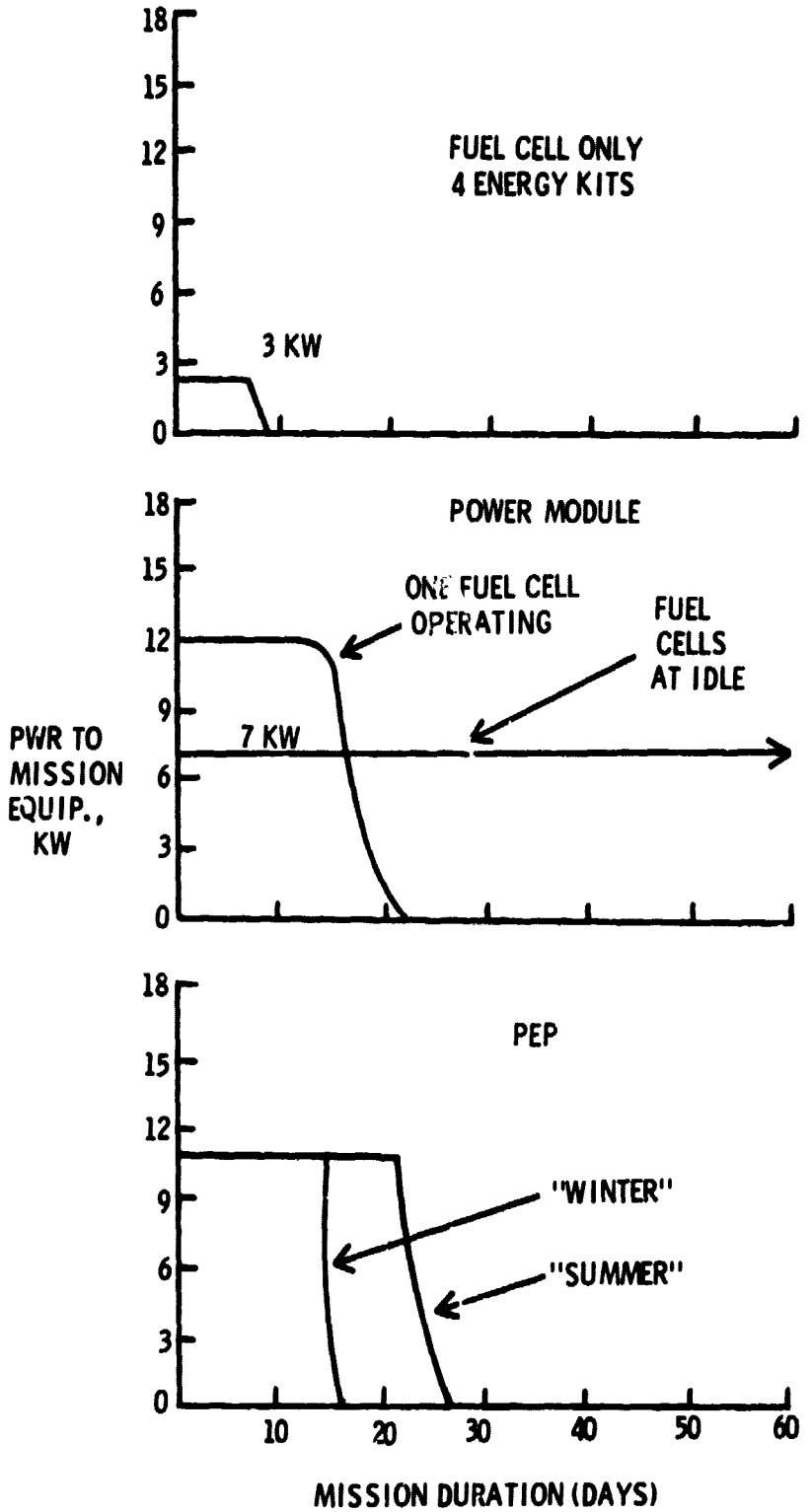

Figure 6. - Power available to user equipment for typical spacelab mission.

E-042

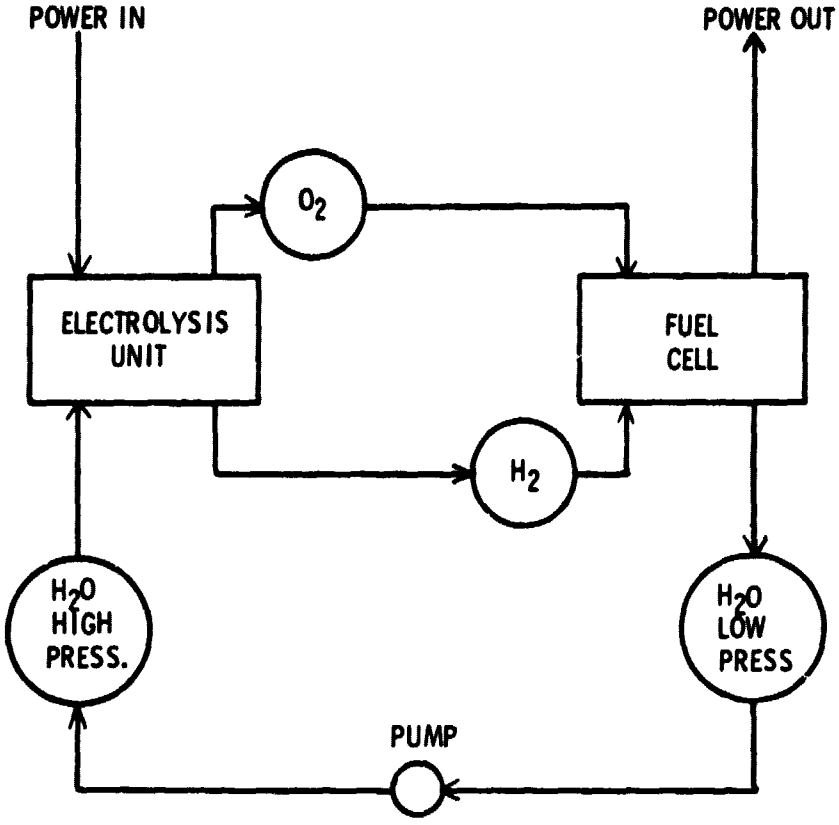

Figure 7. - Fuel cell with dedicated electrolyzer.