March 1979

NAS8-32475
DPD558
DR MA-04

SSD 79-0010-7

(NASA-CR-161223) SATELLITE POWER SYSTEMS (SPS) CONCEPT DEFINITION STUDY, EXHIBIT C. VOLUME 7: SYSTEM/SUBSYSTEM REQUIREMENTS DATA BOOK Final Report (Rockwell International Corp., Downey, Calif.) 118 p G3/44 N79-23489 Unclas 20833

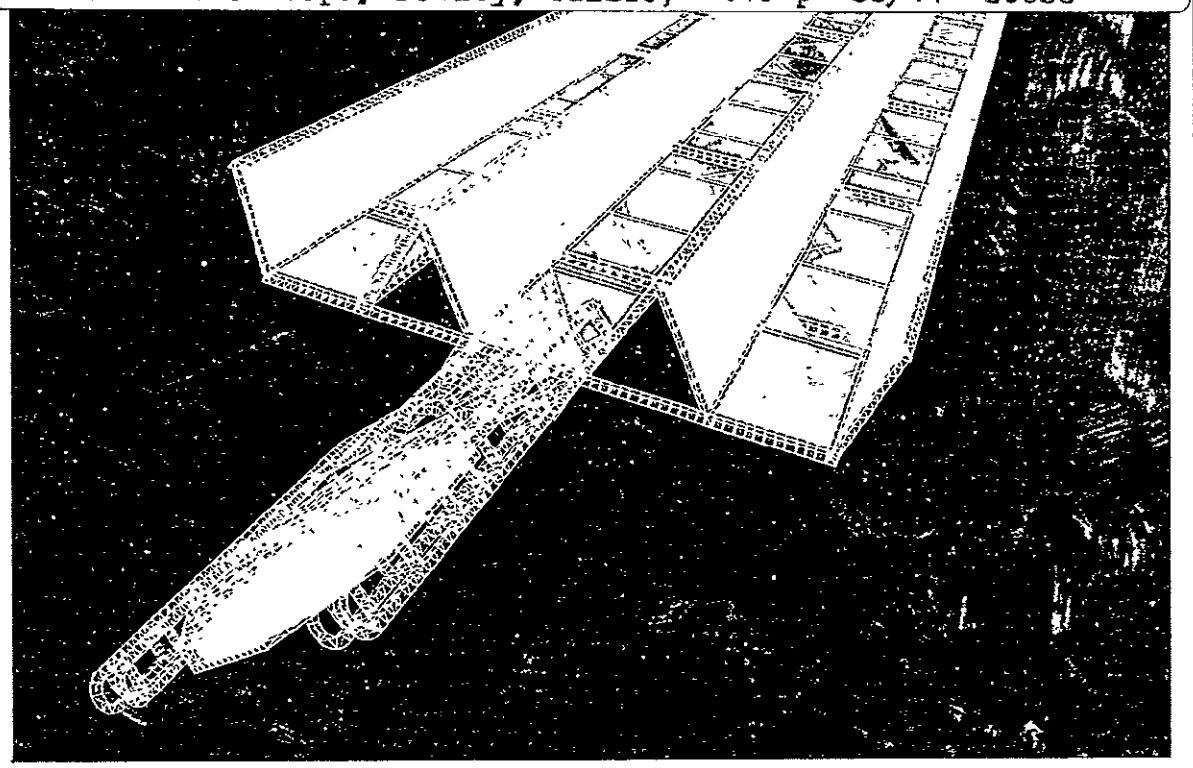

# Satellite Power Systems (SPS) Concept Definition Study

FINAL REPORT (EXHIBIT C)

VOLUME VII

## SYSTEM/SUBSYSTEM REQUIREMENTS DATA BOOK

Rockwell International

Satellite Systems Division
Space Systems Group

12214 Lakewood Boulevard
Downey, CA 90241

SSD 79-0010-7

# Satellite Power Systems (SPS) Concept Definition Study

FINAL REPORT (EXHIBIT C)
VOLUME VII

# SYSTEM/SUBSYSTEM REQUIREMENTS DATA BOOK

CONTRACT NAS8-32475
DPD 558 MA-04

March 1979


*Submitted by*

G. HANLEY
*Program Manager*

*Approved*

C.H. GUTTMAN
*SPS Study Team Manager, NASA/MSFC*


Prepared for:

National Aeronautics and Space Administration
George C. Marshall Space Flight Center

Marshall Space Flight Center
Alabama 35812


MAY 1979
RECEIVED
NASA STI FACILITY
ACCESS DEPT.



Rockwell International

Satellite Systems Division
Space Systems Group

12214 Lakewood Boulevard
Downey, CA 90241

# FOREWORD

This is Volume VII - *Systems/Subsystems Requirements Data Book*, of the SPS Concept Definition Study Final Report as submitted by Rockwell International through the Satellite Systems Division. All work was completed in response to the NASA/MSFC Contract NAS8-32475, Exhibit C, dated March 28, 1978.

The SPS final report will provide the NASA with additional information on the selection of a viable SPS concept and will furnish a basis for subsequent technology advancement and verification activities. Other volumes of the final report are listed as follows:

| Volume | Title |
|---|---|
| I | Executive Summary |
| II | Systems Engineering |
| III | Experiment/Verification Element Definition |
| IV | Transportation Analyses |
| V | Special Emphasis Studies |
| VI | In-Depth Element Investigations |

The SPS Program Manager, G. M. Hanley, may be contacted on any of the technical or management aspects of this report. He may be reached at 213/594-3911, Seal Beach, California.

# CONTENTS


| Section | | Page |
|---|---|---|
| 1.0 | SCOPE/GENERAL REQUIREMENTS | 1-1 |
| | 1.1 INTRODUCTION | 1-1 |
| | 1.2 SATELLITE POWER SYSTEM CONCEPTS | 1-2 |
| | 1.2.1 Candidate Concepts | 1-2 |
| | 1.3 TRANSPORTATION SYSTEM | 1-18 |
| | 1.4 PROGRAM GROUND RULES | 1-19 |
| 2.0 | FUNCTIONAL FLOW BLOCK DIAGRAMS | 2-1 |
| | 2.1 SATELLITE | 2-1 |
| | 2.1.1 Introduction | 2-1 |
| | 2.1.2 Subsystem Identification | 2-1 |
| | 2.2 GROUND RECEIVING STATION | 2-10 |
| | 2.2.1 Introduction | 2-10 |
| | 2.2.2 Subsystem Identification | 2-10 |
| 3.0 | SUBSYSTEM | 3-1 |
| | 3.1 SATELLITE | 3-1 |
| | 3.1.1 Power Conversion | 3-1 |
| | 3.1.2 Microwave Power Transmission System | 3-8 |
| | 3.1.3 Power Distribution and Control | 3-17 |
| | 3.1.4 Structures Subsystem | 3-22 |
| | 3.1.5 Attitude Control and Stationkeeping Subsystem | 3-25 |
| | 3.1.6 Thermal Control | 3-31 |
| | 3.1.7 Information Management and Control | 3-33 |
| | 3.2 GROUND RECEIVING STATION | 3-43 |
| | 3.2.1 Rectenna | 3-43 |
| | 3.2.2 Power Distribution and Control | 3-46 |
| | 3.2.3 Structures | 3-50 |
| | 3.2.4 Converter Stations | 3-53 |
| | 3.2.5 Data Management and Control | 3-53 |
| 4.0 | SUPPORT SYSTEMS | 4-1 |
| | 4.1 GEO OPERATIONAL BASE | 4-1 |
| | 4.2 MAINTENANCE AND REFURBISHMENT FACILITY | 4-1 |
| | 4.3 SPS TRANSPORTATION SYSTEM REQUIREMENTS | 4-1 |
| | 4.3.1 Transportation System Scenario | 4-2 |
| | 4.3.2 Heavy-Lift Launch Vehicle (HLLV) | 4-6 |
| | 4.3.3 Electric Orbital Transfer Vehicle (EOTV) | 4-10 |
| | 4.3.4 Personnel Transfer Vehicle (PTV)/STS-Derived HLLV | 4-12 |
| | 4.3.5 Personnel Orbital Transfer Vehicle | 4-15 |
| | 4.3.6 Personnel Module (PM) | 4-18 |
| | 4.3.7 Intra-Orbit Transfer Vehicle (IOTV) | 4-18 |
| | 4.4 LEO OPERATIONAL BASE | 4-19 |
| | 4.5 CARGO AND PERSONNEL LAUNCH AND RECOVERY FACILITIES | 4-19 |
| | 4.6 BASE SUPPORT FACILITIES | 4-19 |
| | 4.7 LOGISTIC FACILITIES | 4-19 |
| | 4.8 SPS GROUND RECTENNA FACILITIES | 4-19 |

# ILLUSTRATIONS


| Figure | | Page |
|---|---|---|
| 1.1-1 | SPS Program Element Relationship | 1-1 |
| 1.1-2 | Subsystem/Satellite System Relationship | 1-2 |
| 1.2-1 | SPS Conceptual Configuration (Nov. 1977) | 1-3 |
| 1.2-2 | Solar Photovoltaic Satellite (CR-1) (Nov. 1977) | 1-3 |
| 1.2-3 | Solar Photovoltaic Satellite (CR-2) (Nov. 1977) | 1-4 |
| 1.2-4 | Solar Photovoltaic Satellite (CR-5) (Nov. 1977) | 1-5 |
| 1.2-5 | Solar Thermal Brayton (Boeing) 10 GW | 1-6 |
| 1.2-6 | Solar Thermal - Rankine (Nov. 1977) | 1-7 |
| 1.2-7 | Nuclear - Brayton (Nov. 1977) | 1-7 |
| 1.2-8 | Solar Photovoltaic Satellite (CR-2) 5 GW (Apr. 1978) | 1-10 |
| 1.2-9 | Solar Thermal - Rankine (5 GW) (Apr. 1978) | 1-11 |
| 1.2-10 | Microwave Transmission Subsystem - Rectenna (Apr. 1978) | 1-11 |
| 1.2-11 | Rectenna Site Concept (Apr. 1978) | 1-12 |
| 1.2-12 | NASA Reference Configuration (Oct. 1978) | 1-14 |
| 1.2-13 | Alternate Satellite Concepts | 1-15 |
| 1.2-14 | System Efficiency Chain | 1-16 |
| 1.2-15 | Ground Receiving Station | 1-17 |
| 1.3-1 | SPS Transportation System - LEO Operations Operational Program | 1-18 |
| 2.1-1 | SPS Satellite Subsystem Functional Relationships | 2-2 |
| 2.1-2 | Power Generation - Photovoltaic (CR-2) | 2-2 |
| 2.1-3 | Power Distribution | 2-3 |
| 2.1-4 | ACS - Photovoltaic Attitude Reference System | 2-4 |
| 2.1-5 | ACS - Photovoltaic and Solar Thermal, MW Antenna Pointing System | 2-4 |
| 2.1-6 | ACS - Photovoltaic Tank and Engine System | 2-4 |
| 2.1-7 | Structure - Configuration Monitor - Photovoltaic (CR-2) | 2-5 |
| 2.1-8 | Thermal Requirements | 2-6 |
| 2.1-9 | Microwave Antenna - Beam Generation and Control | 2-7 |
| 2.1-10 | SPS IMCS Top-Level Block Diagram | 2-8 |
| 2.1-11 | IMCS Microwave Antenna | 2-9 |
| 2.2-1 | SPS Ground Receiving Station Subsystem Functional Relationships | 2-10 |
| 2.2-2 | Basic Rectenna Panel Assembly | 2-11 |
| 2.2-3 | Panel Dipole/Diode Cluster Layout | 2-11 |
| 2.2-4 | Ground Receiving Station Schematic Block Diagram - Preliminary | 2-12 |
| 2.2-5 | Power Conversion Station Functional Block Diagram - Simplified | 2-13 |
| 2.2-6 | Panel Installation Operations | 2-14 |
| 2.2-7 | IMCS Processor Hierarchy - Typical Ground | 2-15 |
| 3.1-1 | System Efficiency Block Diagram | 3-3 |
| 3.1-2 | Simplified Integrated Block Diagram - Photovoltaic (CR-2) | 3-3 |
| 3.1-3 | Assembly Tree - Solar Photovoltaic Power Conversion | 3-4 |
| 3.1-4 | Alternate Solar Cell Design | 3-5 |

| Figure | | Page |
|---|---|---|
| 3.1-5 | GaAlAs Solar Cell Voltage and Current Characteristics | 3-5 |
| 3.1-6 | GaAlAs Solar Cell Blanket Cross Section | 3-6 |
| 3.1-7 | Solar Panel Power Output - Watts/$m^2$ | 3-6 |
| 3.1-8 | Functional Block Diagram | 3-9 |
| 3.1-9 | Satellite Antenna Array Assembly | 3-10 |
| 3.1-10 | Assembly Tree - Microwave Power Subsystem | 3-11 |
| 3.1-11 | Klystron Subarray Assembly | 3-11 |
| 3.1-12 | Heat Radiators on Array Face | 3-12 |
| 3.1-13 | Reference Phase Distribution System | 3-12 |
| 3.1-14 | Klystron Power Requirements (Preliminary) | 3-13 |
| 3.1-15 | Transistor MIC Amplifier | 3-14 |
| 3.1-16 | Transistor Power Circuitry | 3-14 |
| 3.1-17 | Transistor Chip Layout | 3-15 |
| 3.1-18 | Power Distribution - Simplified Block Diagram | 3-19 |
| 3.1-19 | Assembly Tree - Power Distribution and Control Subsystem | 3-20 |
| 3.1-20 | Assembly Tree - Structures Subsystem | 3-24 |
| 3.1-21 | Structure Breakdown | 3-24 |
| 3.1-22 | Functional Flow Diagram | 3-27 |
| 3.1-23 | Satellite Coordinate Systems | 3-28 |
| 3.1-24 | Assembly Tree - Attitude Control and Stationkeeping Subsystem | 3-31 |
| 3.1-25 | Thermal Control Functional Flow Diagram | 3-32 |
| 3.1-26 | Klystron Radiator Configuration | 3-33 |
| 3.1-27 | Assembly Tree - Thermal Subsystem | 3-34 |
| 3.1-28 | IMCS - MW Antenna | 3-37 |
| 3.1-29 | IMCS - Attitude Control | 3-38 |
| 3.1-30 | IMCS - Power Distribution | 3-39 |
| 3.1-31 | Assembly Tree - Information Management and Control Subsystem | 3-40 |
| 3.2-1 | Operational Ground Receiving Facility (Rectenna) | 3-43 |
| 3.2-2 | Ground Receiving Station Subassembly Relationships | 3-44 |
| 3.2-3 | Assembly Tree - Rectenna | 3-44 |
| 3.2-4 | Simplified Schematic - Rectenna | 3-45 |
| 3.2-5 | Rectenna Systems Major Assembly/Component | 3-46 |
| 3.2-6 | Rectenna Schematic Block Diagram - Preliminary | 3-48 |
| 3.2-7 | Assembly Tree - Power Distribution and Control | 3-48 |
| 3.2-8 | Rectenna Panel Assembly and Installation | 3-51 |
| 3.2-9 | Assembly Tree - Structures | 3-52 |
| 3.2-10 | Rectenna Array Support Structure | 3-52 |
| 3.2-11 | Simplified Block Diagram - Converter Station | 3-53 |
| 3.2-12 | IMCS Hierarchy - Ground Receiving Station | 3-54 |
| 4.3-1 | SPS LEO Transportation Operations | 4-2 |
| 4.3-2 | SPS GEO Transportation Operations | 4-3 |
| 4.3-3 | Reference HLLV Launch Configuration | 4-7 |
| 4.3-4 | HLLV First Stage (Booster) - Landing Configuration | 4-8 |
| 4.3-5 | HLLV Second Stage(Orbiter) - Landing Configuration | 4-9 |
| 4.3-6 | Selected EOTV Configuration | 4-10 |
| 4.3-7 | $LO_2/LH_2$ SSME Integral Twin Ballistic Booster | 4-13 |
| 4.3-8 | STS HLLV Configuration | 4-14 |
| 4.3-9 | Liquid Rocket Booster Main Engine (SSME-35) | 4-15 |
| 4.3-10 | POTV Configuration | 4-16 |
| 4.3-12 | Advanced Space Engine | 4-17 |

# TABLES


| Table | | Page |
|---|---|---|
| 1.2-1 | Solar Photovoltaic Weight Summary | 1-8 |
| 1.2-2 | Solar Thermal Weight Summary | 1-8 |
| 1.2-3 | Nuclear Reactor Concept Weight Summary | 1-9 |
| 1.2-4 | Photovoltaic (CR-2) Satellite Mass Statement - Point Design | 1-12 |
| 1.2-5 | Solar Thermal Satellite Mass Statement - Point Design | 1-13 |
| 1.2-6 | NASA Reference Satellite Mass Properties | 1-14 |
| 1.2-7 | Mass Properties - Alternate Concepts | 1-17 |
| 1.4-1 | Program Ground Rules | 1-19 |
| 1.4-2 | General Requirements Describing Overall SPS Program | 1-19 |
| 3.1-1 | Solar Array Functional Requirements | 3-2 |
| 3.1-2 | GaAlAs Solar Cell and Blanket Preliminary Specification | 3-7 |
| 3.1-3 | SPS Reflector Preliminary Specification (CR-2) | 3-8 |
| 3.1-4 | Solar Array Interfaces | 3-9 |
| 3.1-5 | Microwave Antenna - Operating Modes | 3-10 |
| 3.1-6 | Functional Requirements | 3-15 |
| 3.1-7 | Design and Performance Characteristics | 3-16 |
| 3.1-8 | Phase Error Budget | 3-16 |
| 3.1-9 | Array Characteristics | 3-16 |
| 3.1-10 | Klystron Power Module | 3-17 |
| 3.1-11 | Transistor | 3-17 |
| 3.1-12 | Power Distribution and Control Subsystem - Operating Modes | 3-18 |
| 3.1-13 | Design and Performance Characteristics | 3-21 |
| 3.1-14 | Structural Subsystem - Operating Mode | 3-23 |
| 3.1-15 | Design and Performance Characteristics | 3-26 |
| 3.1-16 | Attitude Control and Stationkeeping - Operating Modes | 3-27 |
| 3.1-17 | Attitude Control Requirements | 3-28 |
| 3.1-18 | Attitude Control RCS Requirements | 3-29 |
| 3.1-19 | Stationkeeping RCS Requirements | 3-30 |
| 3.1-20 | Electric Thruster Requirements | 3-30 |
| 3.1-21 | Thermal Control Subsystem - Operating Modes | 3-32 |
| 3.1-22 | Klystron Cavity Radiators | 3-35 |
| 3.1-23 | IMCS - Operating Modes | 3-36 |
| 3.1-24 | Preliminary Data Interface Summary - Photovoltaic (CR-2) Configuration | 3-40 |
| 3.1-25 | Preliminary Control Interface Summary - Photovoltaic (CR-2) Configuration | 3-40 |
| 3.1-26 | Hardware Summary | 3-42 |
| 3.1-27 | Weight/Power/Volume Summary - IMCS | 3-42 |
| 3.2-1 | Rectenna Functional Requirements | 3-45 |
| 3.2-2 | Rectenna Preliminary Specifications | 3-47 |
| 3.2-3 | Power Distribution and Control - Operating Modes | 3-47 |
| 3.2-4 | Design and Performance Characteristics | 3-50 |
| 3.2-5 | Structural Subsystem - Operating Mode | 3-51 |

| Table | | Page |
|---|---|---|
| 4.3-1 | TFU Transportation Requirements | 4-4 |
| 4.3-2 | SPS Program Transportation Requirements, 30-Year Construction Phase | 4-4 |
| 4.3-3 | Total Transportation Requirements, 60-Year Program | 4-5 |
| 4.3-4 | HLLV Sizing - Ground Rules/Assumptions | 4-6 |
| 4.3-5 | HLLV Mass Properties | 4-7 |
| 4.3-6 | HLLV Weight Statement | 4-8 |
| 4.3-7 | HLLV Propellant Weight Summary | 4-9 |
| 4.3-8 | EOTV Sizing Requirements | 4-11 |
| 4.3-9 | EOTV Thruster Characteristics | 4-11 |
| 4.3-10 | EOTV Weight/Performance Summary | 4-12 |
| 4.3-11 | POTV Weight Summary | 4-16 |
| 4.3-12 | Current ASE Engine Weight | 4-17 |
| 4.3-13 | IOTV Weight Summary | 4-18 |

# 1.0 SCOPE/GENERAL REQUIREMENTS

# 1.0 SCOPE/GENERAL REQUIREMENTS

## 1.1 INTRODUCTION

This volume of Satellite Power Systems (SPS) Concept Definition Study final report summarizes the basic requirements used as a guide to systems analysis and is a basis for the selection of candidate SPS point design(s). Initially, these collected data reflected the level of definition resulting from the evaluation of a broad spectrum of SPS concepts. As the various concepts matured these requirements were updated to reflect the requirements identified for the projected satellite system/subsystem point design(s). Earlier studies (reported in Volumes I - VII, SD 79-AP-0023, dated April 1978) established two candidate concepts which were presented to the NASA for consideration. NASA, in turn, utilizing these and other concepts developed under the auspices of other contracts, established a baseline or reference concept which was to be the basis for future evaluation and point design. This volume defines the identified subsystem/systems requirements, and where appropriate, presents recommendations for alternate approaches which may represent improved design features. A more detailed discussion of the selected point design(s) will be found in Volume II of this report.

Figure 1.1-1 establishes the relationship of the satellite system with the other elements of the SPS program.

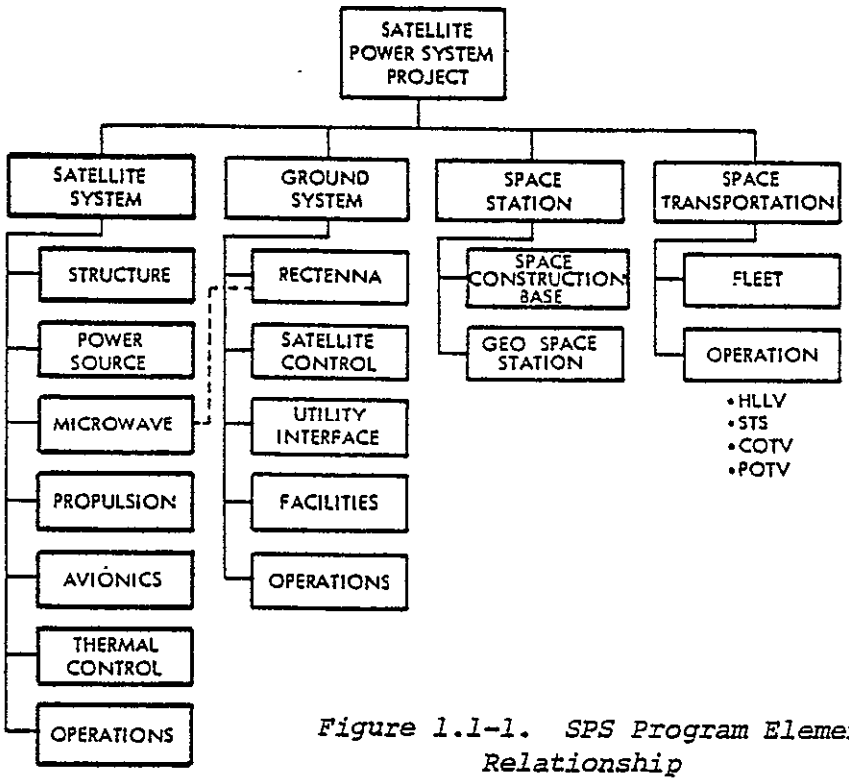


*Figure 1.1-1. SPS Program Element Relationship*

Figure 1.1-2 identifies the various satellite subsystems and the functions as they apply on the satellite. Equivalent functions are applicable to the ground receiving station (rectenna) system and will not be expanded here. A limited discussion of ground receiving station subsystem functions will be found in the section dedicated to ground receiving station requirements.

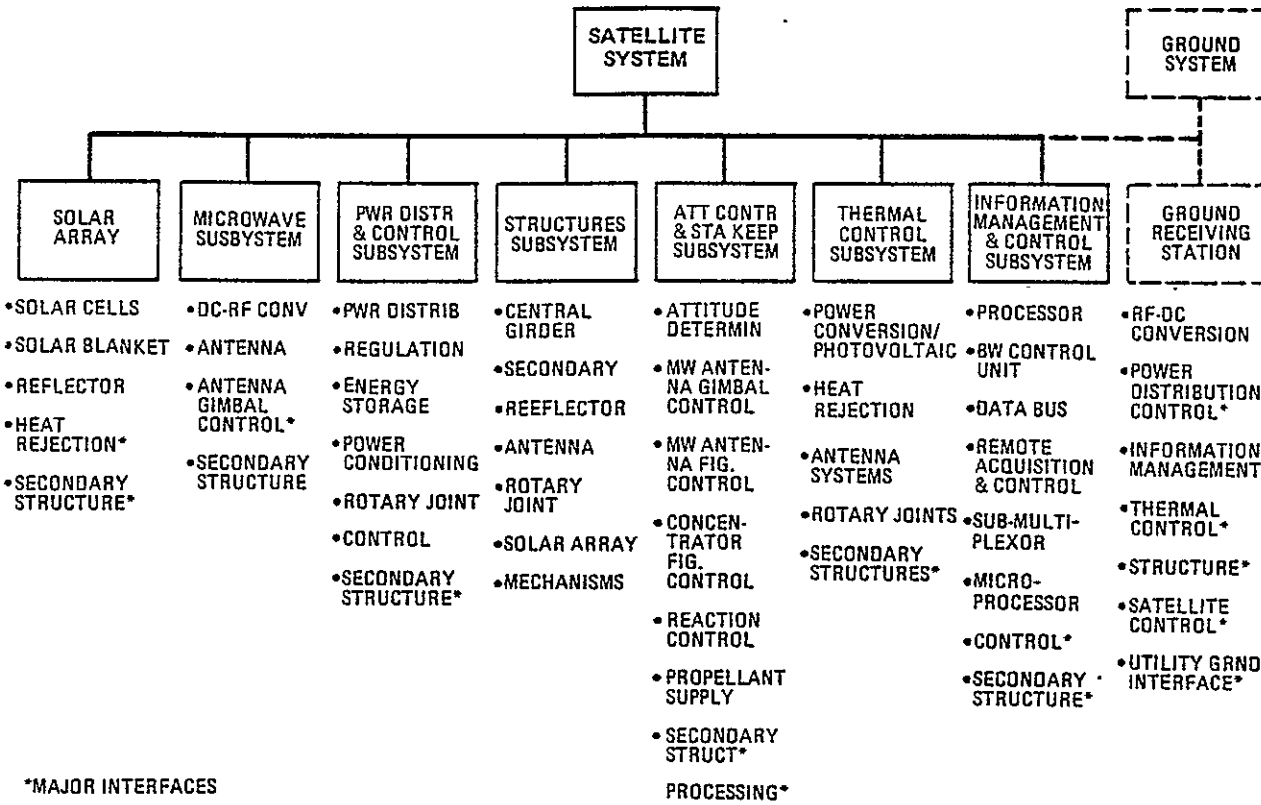


*Figure 1.1-2. Subsystem/Satellite System Relationship*

The ground receiving station is identified in Figure 1.1-2 and is shown to have an indirect (dotted) relationship to the orbiting satellite. Major assemblies comprising each subsystem are identified. Unique factors such as elements of one subsystem that are integrated with another (for example, thermal radiators, subsystem control, etc.) are also identified. This document will also identify supporting subsystems, including the transportation system and SPS related ground facilities where these elements have been identified and evaluated.

## 1.2 SATELLITE POWER SYSTEM CONCEPTS

### 1.2.1 CANDIDATE CONCEPTS

#### Initial Candidate Concepts

Many candidate system concepts have been considered since the inception of this study program. Six satellite concepts were identified for consideration at a briefing in November 1977. These concepts are shown in Figure 1.2-1. A single rectenna farm concept was assumed, applicable to all satellite concepts

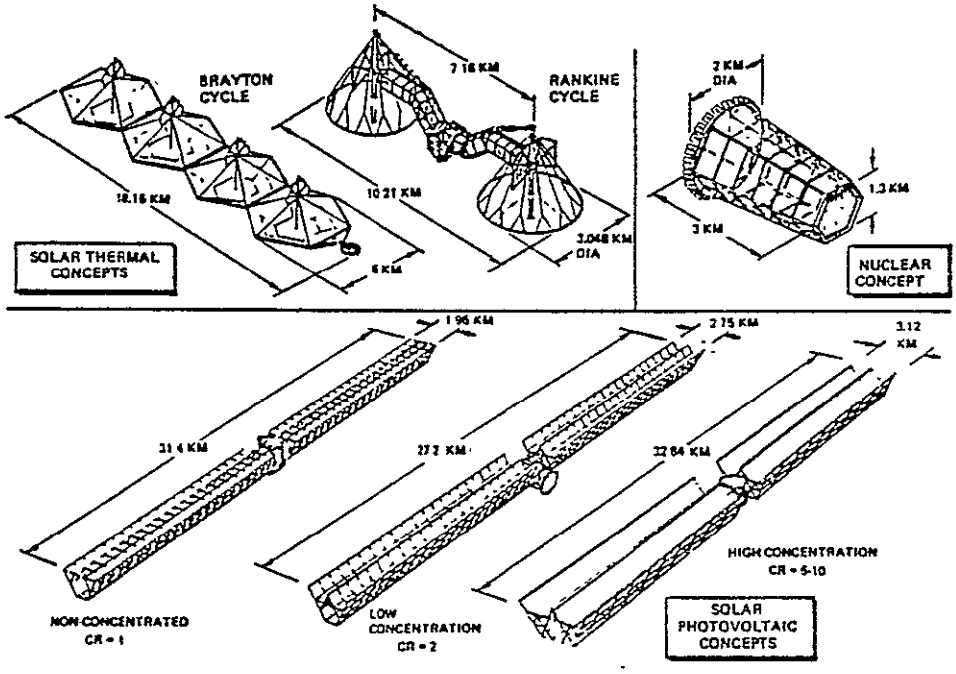


*Figure 1.2-1. SPS Conceptual Configuration (Nov. 1977)*

Solar Photovoltaic (CR-1). Figure 1.2-2 illustrates the solar photovoltaic (CR-1) satellite power system concept. The CR-1 system was a planar array and had an overall planform dimension of 2.0×28.58 km. The depth of the satellite was 1.17 km. This system required 48.99 $km^2$ of deployed solar cell area and had a total mass of $37.3 \times 10^6$ kg, including a 30.7 percent growth factor. The major advantages of the CR-1 configuration were its simplicity of design; it did not require reflectors; and its relative insensitivity to misorientation angles of as much as ±3 degrees. The CR-1 configuration would have had the largest solar cell area and mass in orbit.

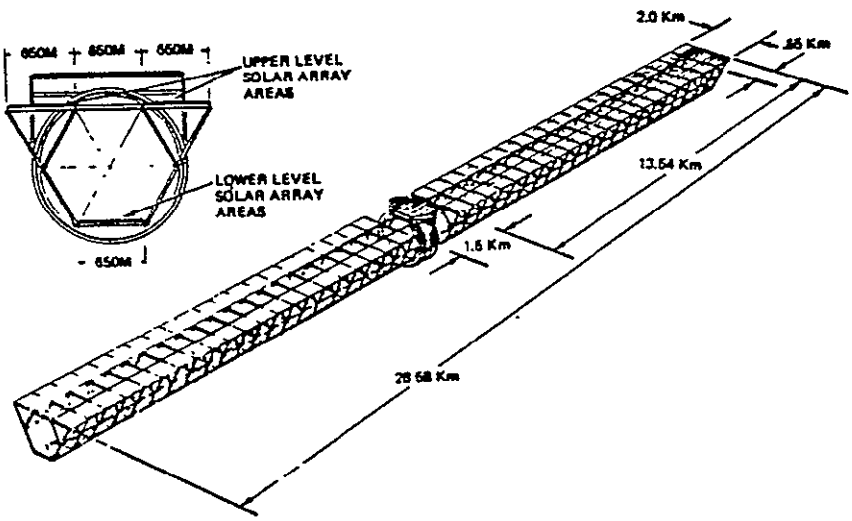


*Figure 1.2-2. Solar Photovoltaic Satellite (CR-1) (Nov. 1977)*

Solar Photovoltaic (CR-2). Figure 1.2-3 illustrates the solar photovoltaic (CR-2) satellite power system concept. The CR-2 system used reflector membranes to concentrate solar energy on the cells. The satellite had two "Vee" troughs per wing. The overall planform dimensions were 2.75×27.16 km, and the depth was 1.2 km. This system required 23.76 $km^2$ of deployed solar cell area and had a total mass of $33.7\times10^6$ kg, including a 30-percent growth factor. The major advantages of the CR-2 configuration were the reduced requirement for solar cells and low weight which reduced overall cost. The disadvantages were the planform of the satellite was higher than for CR-1 and the system was sensitive to misorientation. A ±1 degree misorientation of the solar array required an additional 7.9 percent of reflector surface area. The reflective membranes for the GEO environment was not available, and reflectivities of 90 percent at the beginning of life and 72 percent at the end of life were used in the design.

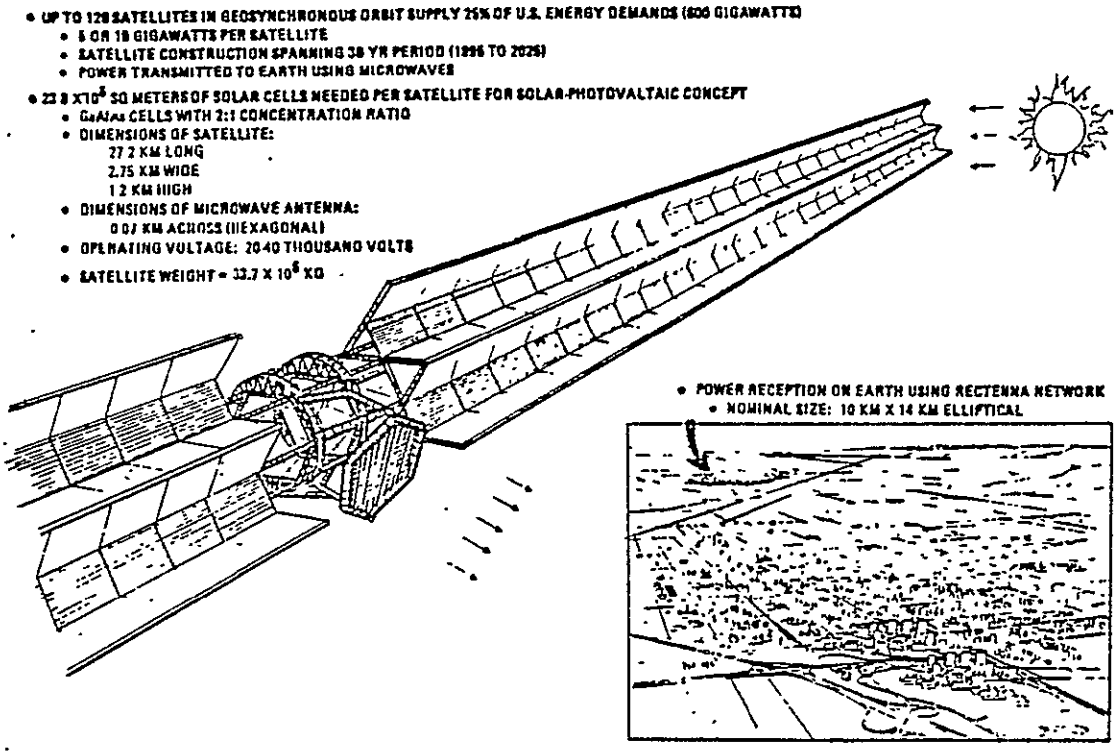


*Figure 1.2-3. Solar Photovoltaic Satellite (CR-2) (Nov. 1977)*

Solar Photovoltaic (CR-5). Figure 1.2-4 illustrates the solar photovoltaic (CR-5) satellite power system concept. The CR-5 system had two troughs per wing and used reflector membranes to concentrate solar energy on the cells. The satellite had the overall planform dimension of 3.12×32.84 km and the depth was 1.4 km. This system required 10.4 $km^2$ of deployed solar cell area and had a total mass of $37.4\times10^6$ kg, including a 31.2-percent growth factor. The CR-5 system required the lowest solar cell area. The CR-5 configuration was very sensitive to misorientation angles of only ±1 degree. At a geometric concentration ratio of 5, an increase in reflector surface of 43 percent was required to compensate for a misorientation of ±1 degree.

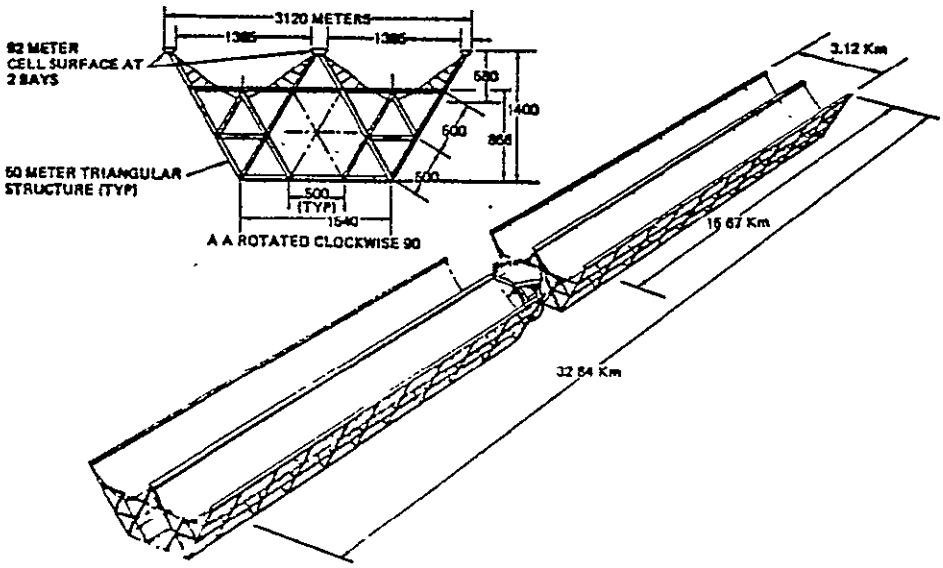


*Figure 1.2-4. Solar Photovoltaic Satellite (CR-5) (Nov. 1977)*

Solar Thermal - Brayton. Figure 1.2-5 shows one Boeing concept for a 10-GW solar thermal SPS. It used four concentrator modules, each composed of thousands of planar facets which reflect sunlight into a cavity absorber. Ceramic tubing in the absorber heated pressurized helium to 1379°C (2514°F) which was supplied to a Brayton cycle power module comprised of a turbine, regenerator, cooler, compressor, and electrical generator. Heat rejected from the cycle was dissipated by means of a NaK loop to a heat pipe/fin radiator. Microwave power was transmitted from a single antenna at the end of the satellite.

Solar Thermal - Rankine. Figure 1.2-6 shows a Rockwell concept for a 5-GW solar thermal SPS using a cesium Rankine cycle. The two concentrators were inflatable, using aluminized plastic film with a transparent canopy. Sunlight was concentrated on an open-disc absorber (cesium boiler) which provides cesium vapor at 1038°C (1900°F) to cesium turbines. Exhaust from the cesium turbines was condensed at 400°F in a tube/fin radiator. Each of the concentrator modules was hinged to permit seasonal tracking of the sun without imposing gravity gradient torques on the satellite. The beam connecting the two modules was offset to locate the rotary joint at the satellite center of gravity.

Nuclear - Brayton. Figure 1.2-7 illustrates the nuclear-powered satellite power system concept. The nuclear Brayton powered SPS consisted of 26 power modules configured in a circular array 2 km in diameter. The antenna was separated by a distance of 3 km from the power modules. In this manner, reactor shadow shielding and reactor-close plane separation distance were combined to reduce nuclear radiation at the antenna to a level acceptable to maintenance personnel. Each power module generated 344 $MW_e$ to provide the required power at the distribution bus as well as its own housekeeping requirements. Brayton cycle waste heat was rejected by a square radiator measuring 227 meters (750 feet) on each side (26 required). Each power module was approximately 40 feet in diameter and 144 feet in length, and contained one nuclear reactor with

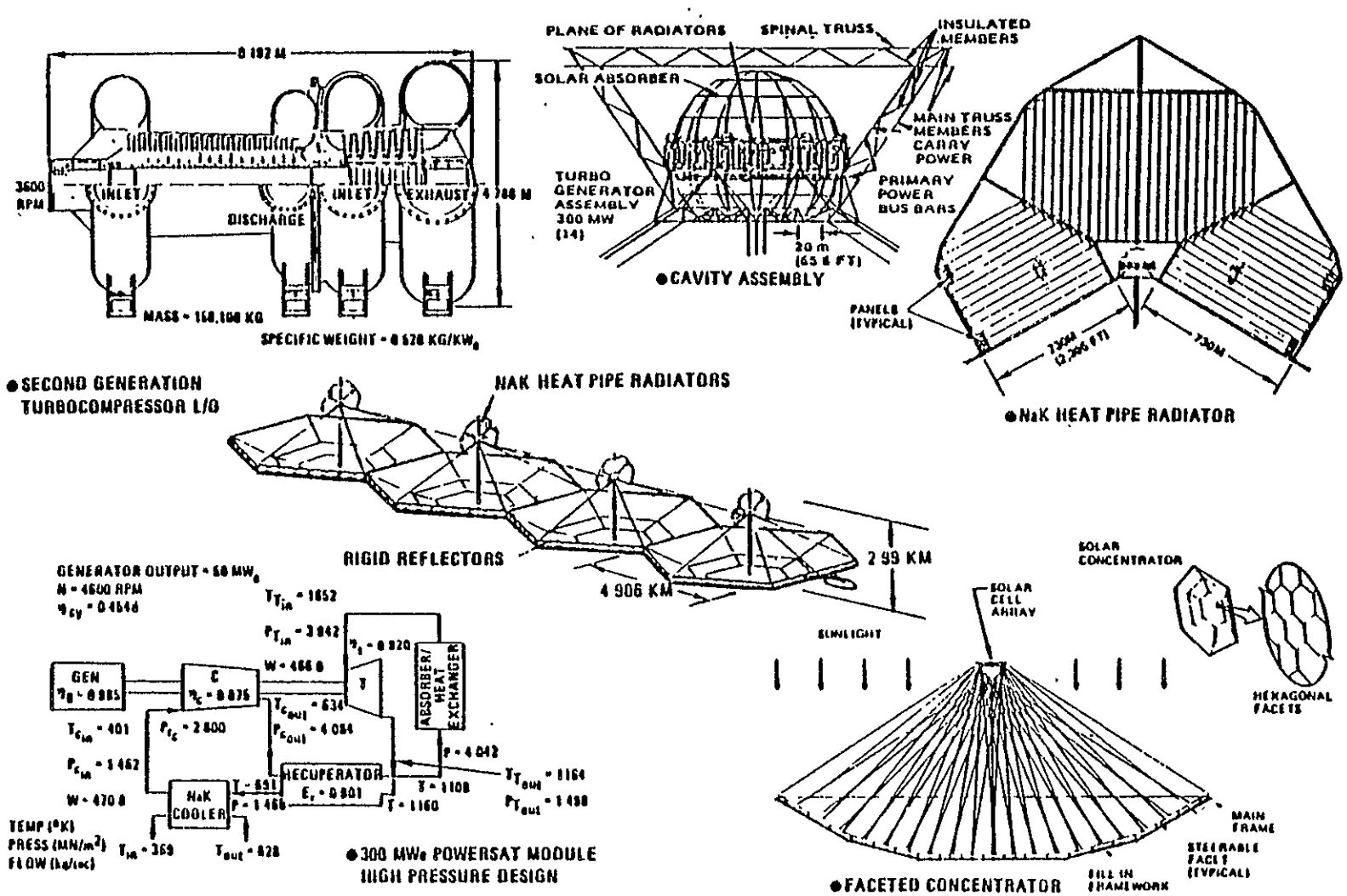


*Figure 1.2-5. Solar Thermal Brayton (Boeing) 10 GW*



Satellite Systems Division
Space Systems Group
Rockwell International

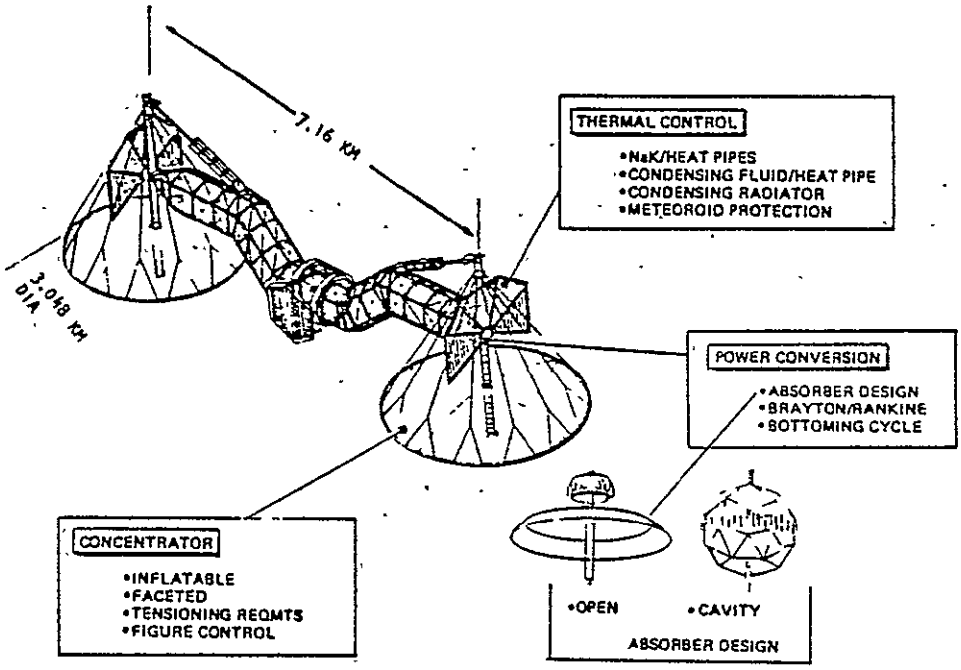


*Figure 1.2-6. Solar Thermal - Rankine (Nov. 1977)*

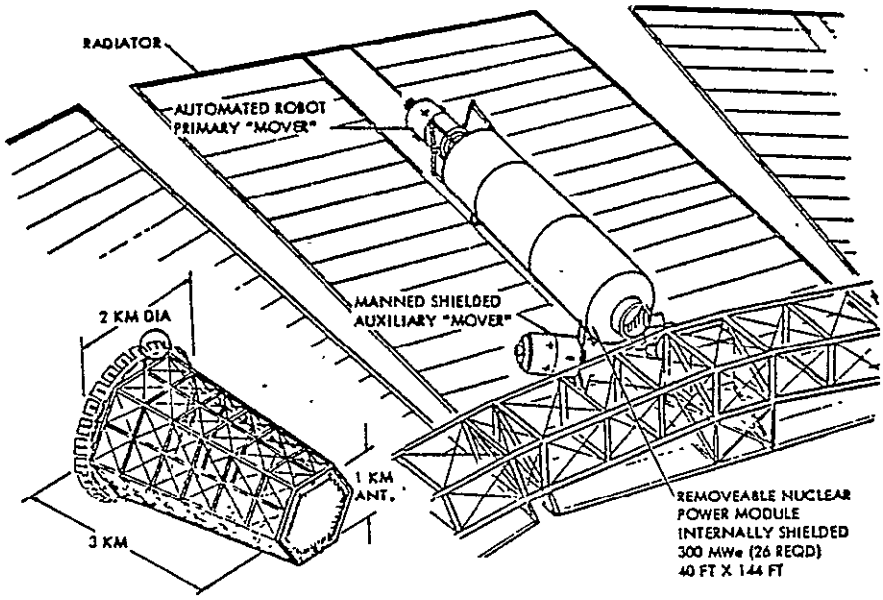


*Figure 1.2-7. Nuclear - Brayton (Nov. 1977)*

shadow shield, fuel reprocessing assembly, and two closed Brayton cycle power conversion units. The power module could be removed from the radiator for replacement by remotely operated equipment.

Satellite Mass Properties. Tables 1.2-1 through 1.2-3 present the summary weights for the six initial candidate satellite concepts. The solar thermal weight summary illustrates the known weight elements for both potassium-(K) and cesium-(Ce) based Rankine thermal cycles.

*Table 1.2-1. Solar Photovoltaic Weight Summary (GaAlAs Solar Cells) (Nov. 1977)*

| CONCENTRATION RATIO | CR = 5 $10^6$ KG | CR = 2 $10^6$ KG | CR = 1 $10^6$ KG | GROWTH % |
|---|---|---|---|---|
| COLLECTOR ARRAY (NON ROT.) | (18 363) | (15 465) | | (38 3) |
| PRIM /SEC STRUCT./MECH. | 9 306 | 3 993 | 2.805 | 25 0 |
| ATTITUDE CONTROL | 300 | 0 212 | 375 | 30 0 |
| SOLAR CELLS | 3 297 | 5 990 | 12.343 | 24 7 |
| REFLECTORS | 2 182 | 2.052 | N/A | 15 0 |
| POWER CONDIT. | 387 | 387 | 387 | 50 0 |
| WIRE HARNESS/SLIP RING | 2 891 | 2.891 | 2.469 | 97 0 |
| ANTENNA (ROTATING) | (9 794) | 9 794 | 9 794 | (23 1) |
| PRIM /SEC STRUCT./MECH. | 268 | | | 25 0 |
| COOLING | 200 | | | 50 0 |
| PWR CONVERTERS | 5 690 | | | 20 0 |
| WIRING/SLIP RING | 096 | SAME | SAME | 94 0 |
| WAVEGUIDES | 3.540 | | | 20 0 |
| IMS EQMT/CABLING | 240 | .240 | 240 | 88.0 |
| PROPELLANT/YEAR | 100 | .100 | .100 | 0 |
| SUBTOTAL SATELLITE SYST. | 28 497 | 25.599 | 28.513 | |
| GROWTH ALLOWANCE | 8.882 | 8.115 | 8.766 | 31.2 |
| TOTAL SATELLITE SYST. | 37 379 | 33 714 | 37.279 | |

COMPARABLE SILICON CR = 1
WEIGHT = 43 589 X $10^6$ KG

*Table 1.2-2. Solar Thermal Weight Summary (Nov. 1977)*

| CONVERSION CONCEPT | BRAYTON ($10^6$ KG) | RANKINE POTASSIUM ($10^6$ KG) | RANKINE CESSIUM ($10^6$ KG) | GROWTH % |
|---|---|---|---|---|
| COLLECTOR ARRAY (NON-ROT) | (22.846) | (31.178) | (22 559) | |
| PRIM./SEC STRUCT /MECH. | 2.217 | 2.217 | 2.139 | 25 0 |
| ATTITUDE CONTROL | 200 | 200 | 200 | 30.0 |
| SOLAR COLLECTOR | 878 | 1 200 | 1.109 | 24 4 |
| SOLAR ABSORBER | 2 600 | 230 | 230 | 30 0 |
| TURBO EQUIP /GEN | 4.990 | 14 100 | 5.650 | 30 0 |
| POWER CONDIT | 1 839 | 1 839 | 1.839 | 50 0 |
| WIRE HARNESS/SLIP RING | 1 262 | 1 262 | 1 262 | 100 |
| RADIATORS | 8 860 | 10.130 | 10.130 | 30 0 |
| ANTENNA (ROT ) | 9.794 | 9 794 | 9 794 | 23.1 |
| IMS EQMT/CABLING | .240 | 240 | .240 | 75 0 |
| PROPELLANT/YEAR | 100 | 100 | .100 | 0 |
| SUBTOTAL SATELLITE SYST | 32.980 | 41.312 | 32.693 | |
| GROWTH ALLOWANCE | 10.182 | 12.566 | 10.087 | 30.8 |
| TOTAL SATELLITE SYST | 43.162 | 53.878 | 42.780 | |

*Table 1.2-3. Nuclear Reactor Concept Weight Summary (Nov. 1977)*

| | ($10^6$ KG) | | GROWTH % |
|---|---|---|---|
| PRIMARY STRUCTURE | 0 361 | | 25 0 |
| SEC. STRUCT. | 1.112 | | 25 0 |
| ATTITUDE CONTROL | 0 20 | | 30 0 |
| SHEILDING | 0 54 | | 30 0 |
| REACTORS (26) | 2 06 | | 30 0 |
| FUEL PROCESSING | 1 01 | 20.73* | 30 0 |
| TURBO EQUIPMENT | 3 34 | | 30 0 |
| GENERATORS | 1 83 | | 30 0 |
| RADIATORS | 11 94 | | 30 0 |
| POWER CONDIT | 1 839 | | 50 0 |
| WIRE HARDNESS | 0 60 | | 100 |
| ANTENNA | 9 88 | | 23 1 |
| IMS EQUIP. | 0 061 | | 50 0 |
| IMS CABLING ITS | 0.179 | | 100 |
| PROPELLANT/YEAR | 0 10 | | 0 |
| SUBTOTAL | 35 052 | | – |
| GROWTH ALLOWANCE | 10 411 | | 29 6 |
| TOTAL SATELLITE SYST. | 45 463 | | |

| CONCEPT WEIGHT COMPARISONS | | | |
|---|---|---|---|
| POWER CONVERSION CONCEPT | BASE WEIGHT ($10^6$ KG) | GROWTH (%) | TOTAL WEIGHT ($10^6$ KG) |
| CR = 1 | 28 513 | 30.7 | 37.279 |
| 2 | 25.599 | 30 0 | 33.714 |
| 5 | 28.497 | 31.2 | 37.379 |
| RANKINE CS/STEAM | 26 386 | 31.2 | 34 605 |
| NUCLEAR | 35 058 | 29 6 | 45.465 |

*GASEOUS CORE REACTOR/MHD COULD POTENTIALLY REDUCE THIS TO 1.99 X $10^6$ KG – REFERENCE 8TH IECEC PAPER 739018, 1973

RADIATOR OPTIMIZATION COULD POTENTIALLY REDUCE THIS TO 14.95 X $10^6$KG - CONDENDING STEAM RADIATOR (LOWER TEMPERATURE)

Rectenna. The ground receiver or rectenna transforms the transmitted radio frequency energy to dc current for distribution into the utility network. The area covered by a 5-gigawatt (GW) delivered power rectenna rate is shown for a typical city (Figure 1.2-3). The rectenna formed an ellipse that is approximately 6×10 km. An additional 4 km in radial length was provided to the security fence to assure a safe level of radiation outside the fence.

## First Candidate Selection (April 1977)

The two concepts selected for further evaluation and definition at the end of the initial study in April 1978 were a photovoltaic (CR-2) approach and a variation of the proposed Rockwell Solar Thermal satellite. A summary description of the two selected point designs are given in the following two paragraphs. Both these concepts are described in greater detail in Volume II of the Final Report (SD 79-AP-0023, dated April 1978).

In addition the selected ground receiving station point design which differs slightly from the previous concept is briefly described below and in more expanded form in Volume II of this report.

Solar Photovoltaic (CR-2). The GaAlAs photovoltaic point design satellite power system concept is shown in Figure 1.2-8. The system utilizes aluminized reflector membranes to concentrate the solar energy on the cells. The satellite solar reflectors produce a concentration ratio of CR-2. The satellite employes the "Vee trough" configuration has three troughs per wing. The system has an overall efficiency of 6.08% and delivers 5 GW of electrical energy to the utility company on the ground. The overall planform dimensions are 3.85×21.3 km, and the depth is 1.69 km. The satellite has a mass of $36.56\times10^6$ kg which includes a 30% growth factor for the mass. The system requires $30.6\times10^6$ $m^2$ of solar cells and $61.2\times10^6$ $m^2$ of reflector surface. The solar cells for the point design are GaAlAs cells rated at 20% efficiency at AMO and 28°C. The solar array blanket mass is 0.2525 $kg/m^2$.

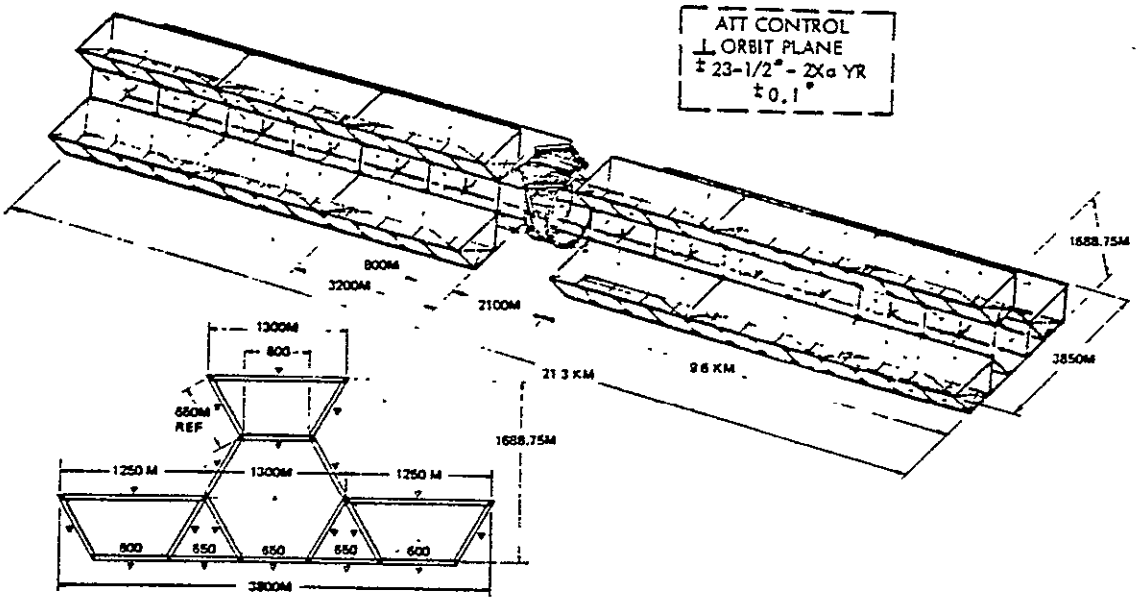


*Figure 1.2-8. Solar Photovoltaic Satellite (CR-2) 5 GW (Apr. 1978)*

Solar Thermal - Rankine. Figure 1.2-9 shows the Rockwell point design concept of a 5-GW solar thermal SPS using a cesium/steam Rankine cycle. The two concentrators are of an inflatable design, using aluminized plastic film with a transparent canopy. Sunlight is concentrated on an open-disc absorber (cesium boiler) which provides cesium vapor at 1260°C (2300°F) to cesium turbines. Exhaust from the cesium turbines is condensed at 593°C (1100°F) on the outside of steam boiler tubes which produce steam at 538°C (1000°F) and 16.6 $kN/m^2$ (2400 psia) to a bottoming steam turbine. Exhaust from the steam turbines is condensed at 204°C (400°F) in a tube/heat pipe/fin radiator.

Each of the concentrator modules is hinged to permit seasonal tracking of the sun without imposing gravity gradient torques on the satellite. The beam connecting the two modules is offset to locate the rotary joint at the satellite center of gravity. This permits mounting of thrusters on the rotary joint and facilitates their orientation during LEO/GEO orbital transfer.

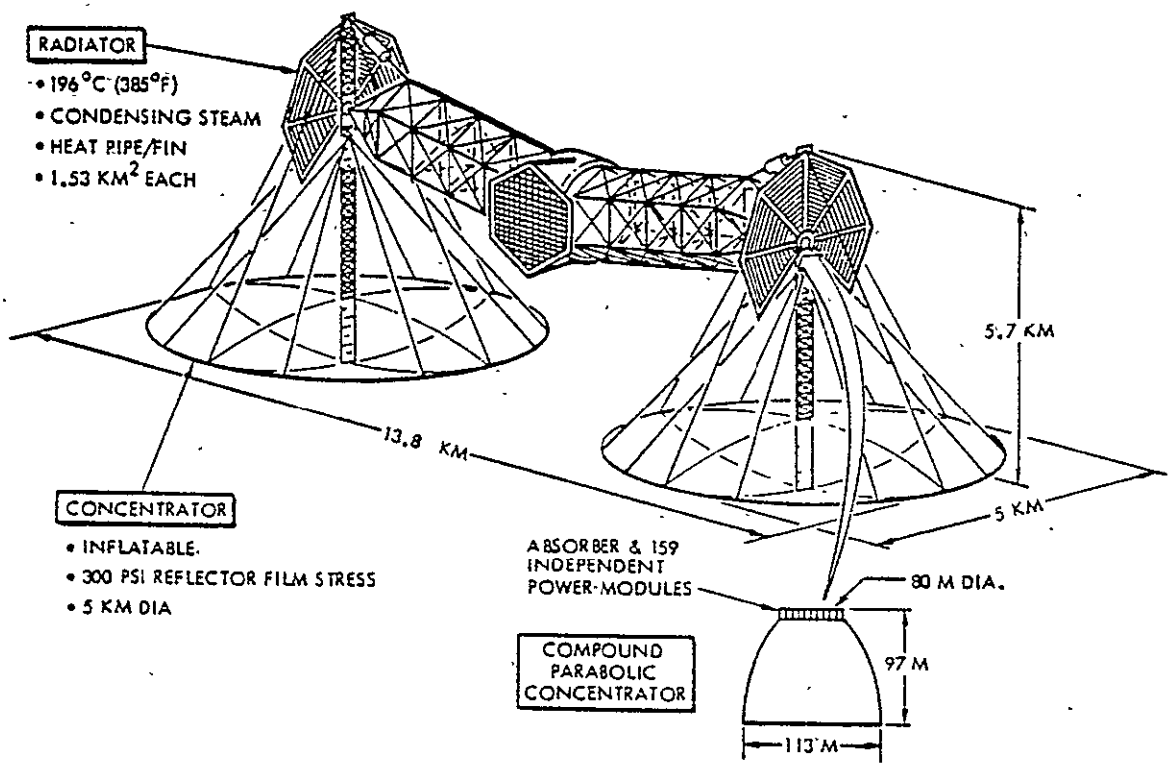


*Figure 1.2-9. Solar Thermal - Rankine (5 GW) (Apr. 1978)*

Rectenna. The rectenna concept selected for further definition is illustrated in Figure 1.2-10. The receiving antenna forms an eclipse with major and minor axis of 13 km and 10 km respectively. The major axis is aligned along the N-S geographic line. Figure 1.2-11 illustrates the general site concept recommended by the study to date.

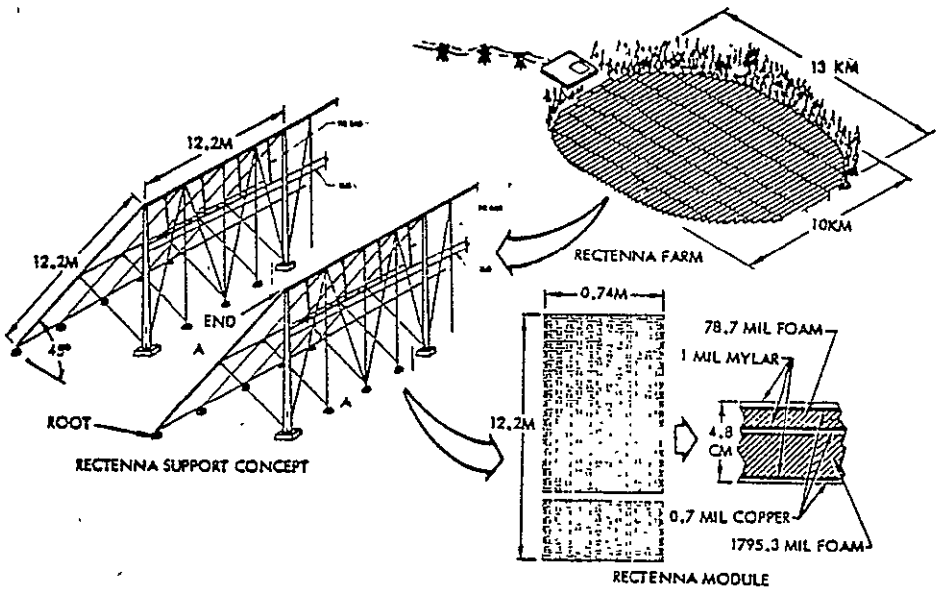


*Figure 1.2-10. Microwave Transmission Subsystem - Rectenna (Apr. 1978)*

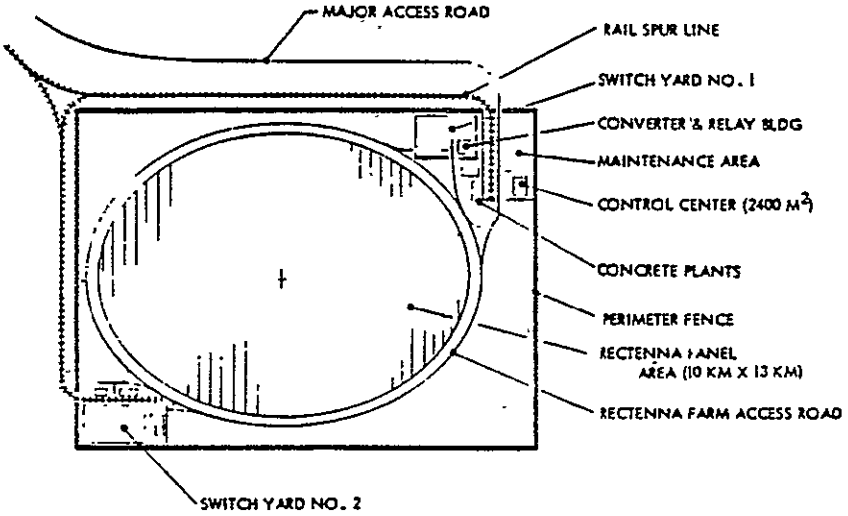


*Figure 1.2-11. Rectenna Site Concept (Apr. 1978)*

Mass Properties. Table 1.2-4 and 1.2-5 present a summary of the estimated weight for the two point design concepts.

*Table 1.2-4. Photovoltaic (CR-2) Satellite Mass Statement - Point Design (Apr. 1978)*

| Subsystem | Weight (Million kg) |
|---|---|
| Collector array | |
| Structure and mechanisms | 3.777 |
| Power source | 8.831 |
| Power distribution and control | 1.166 |
| Attitude control | 0.095 |
| Information management and control | 0.050 |
| Total array (dry) | (13.919) |
| Antenna section | |
| Structure and mechanisms | 1.685 |
| Thermal control | 1.408 |
| Microwave power | 7.012 |
| Power distribution and control | 3.469 |
| Information management and control | 0.630 |
| Total antenna section (dry) | (14.204) |
| Total SPS dry weight | 28.123 |
| Growth (30%) | 8.437 |
| Total SPS dry weight with growth | 36.560 |
| Propellant per year | 0.040 |

*Table 1.2-5. Solar Thermal Satellite Mass Statement - Point Design (Apr. 1978)*

| SUBSYSTEM | WEIGHT (MILLION KG) |
|---|---|
| COLLECTOR ARRAY | |
| STRUCTURE AND MECHANISMS | 1.661 |
| POWER SOURCE | 3.120 |
| POWER DISTRIBUTION AND CONTROL | 4.304 |
| ATTITUDE CONTROL | 0.095 |
| THERMAL CONTROL | 8.786 |
| INFORMATION MANAGEMENT AND CONTROL | 0.050 |
| TOTAL ARRAY (DRY) | (18.016) |
| ANTENNA SECTION | |
| STRUCTURE AND MECHANISMS | 1.685 |
| THERMAL CONTROL | 1.408 |
| MICROWAVE POWER | 7.012 |
| POWER DISTRIBUTION AND CONTROL | 3.469 |
| INFORMATION MANAGEMENT AND CONTROL | 0.630 |
| TOTAL ANTENNA SECTION | (14.204) |
| TOTAL SPS DRY WEIGHT | 32.220 |
| GROWTH (30%) | 9.666 |
| TOTAL SPS DRY WEIGHT WITH GROWTH | (41.886) |
| PROPELLANT PER YEAR | 0.040 |

NASA Reference Satellite Concept

In October 1978, NASA established a baseline (Reference) concept to be used in subsequent design and feasibility analysis. The primary approach selected consisted of solar blankets installed on a multi-trough, plannar structure with a microwave transmission system for power transfer to Earth located sites. The initial concept proposed a primary solar conversion approach utilizing Silicon solar cells with a concentration ratio of one (CR-1) and an alternate approach using GaAlAs with a concentration ratio of two (CR-2).

The Silicon cell based concept consisted of 8 cell troughs each containing 16 bays. The GaAlAs concept consisted of 5 troughs by 20 bays. Both concepts utilized an end mounted, 1 km (nominal) microwave antenna. Both concepts were normally 5.3×10.4 km, with the Silicon concept containing a greater mass. ($51\times10^6$ kg) compared with GaAlAs (34 10 kg). Figure 1.2-12 illustrates the GaAlAs version of the reference satellite. Overall system efficiency for the Silicon based concept is estimated to be 7.06%, while for GaAlAs the efficiency is estimated to be 6.97%. Power output for these concepts (at utility interface) is estimated at 5.0 GW.

Mass Properties. Table 1.2-6 presents a summary of the estimated mass for the two reference concepts.

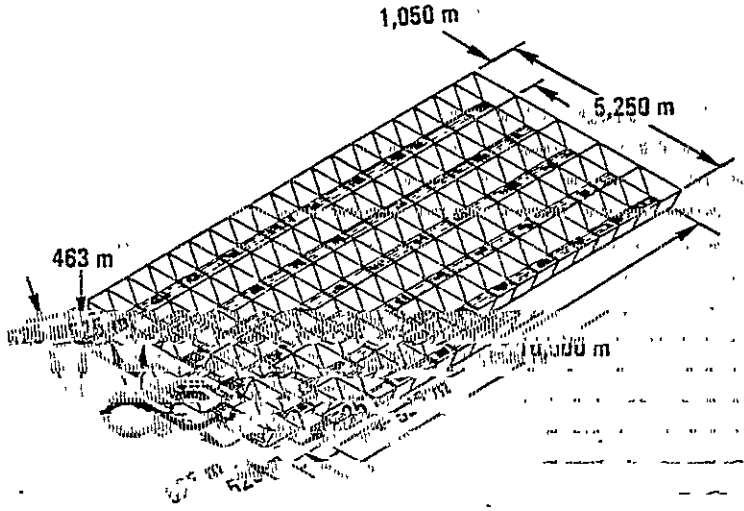


Figure 1.2-12 Baseline Configuration (December 1978)

Table 1.2-5 Mass Breakdown Estimate Per Bay (December 1978)

| SUBSYSTEM | GaAlAs CR = 2 OPTION | | SILICON CR = 1 OPTION | |
|---|---|---|---|---|
| SOLAR ARRAY | | 13.796 | | 27.258 |
| PRIMARY STRUCTURE | 4.172 | | 3.388 | |
| SECONDARY STRUCTURE | 0.581 | | 0.436 | |
| SOLAR BLANKETS | 6.696 | | 22.051 | |
| CONCENTRATORS | 0.955 | | — | |
| POWER DISTRIBUTION & CONDITIONING | 1.144 | | 1.134 | |
| INFORMATION MANAGEMENT & CONTROL | 0.050 | | 0.050 | |
| ANTENNA | | 13.382 | | 13.382 |
| PRIMARY STRUCTURE | 0.250 | | 0.250 | |
| SECONDARY STRUCTURE | 0.786 | | 0.786 | |
| TRANSMITTER SUBARRAYS | 7.178 | | 7.178 | |
| POWER DISTRIBUTION & CONDITIONING | 2.189 | | 2.189 | |
| THERMAL CONTROL | 2.222 | | 2.222 | |
| INFORMATION MANAGEMENT & CONTROL | 0.630 | | 0.630 | |
| ATTITUDE CONTROL | 0.128 | | 0.128 | |
| ARRAY/ANTENNA INTERFACES* | | 0.147 | | 0.147 |
| PRIMARY STRUCTURE | 0.094 | | 0.094 | |
| SECONDARY STRUCTURE | 0.003 | | 0.003 | |
| MECHANISMS | 0.033 | | 0.033 | |
| POWER DISTRIBUTION | 0.017 | | 0.017 | |
| SUBTOTAL | | 27.327 | | 40.787 |
| CONTINGENCY (25%) | | 6.832 | | 10.197 |
| TOTAL | | 34.159 | | 50.984 |

* ROTARY JOINT, SLIP RINGS, ANTENNA YOKE

## Recommended Alternative Satellite Concept

The Rockwell satellite concept as of December 1978 is presented in Figure 1.2-13. Figure 1.2-13(a) illustrates the Rockwell end mounted antenna while Figure 1.2-13(b) depicts a satellite with a center mounted antenna concept. Both approaches consist of a 3 bay by 10 bay structure containing the solar arrays and reflectors. The 30 bay structure is sized to dimensions of 3900 kg by 16000 meters. The center, antenna mounting, structure adds 1900 meters to the overall length of the satellite. The end mounted antenna concepts dry mass is greater by approximately $1.0 \times 10^6$ kg.

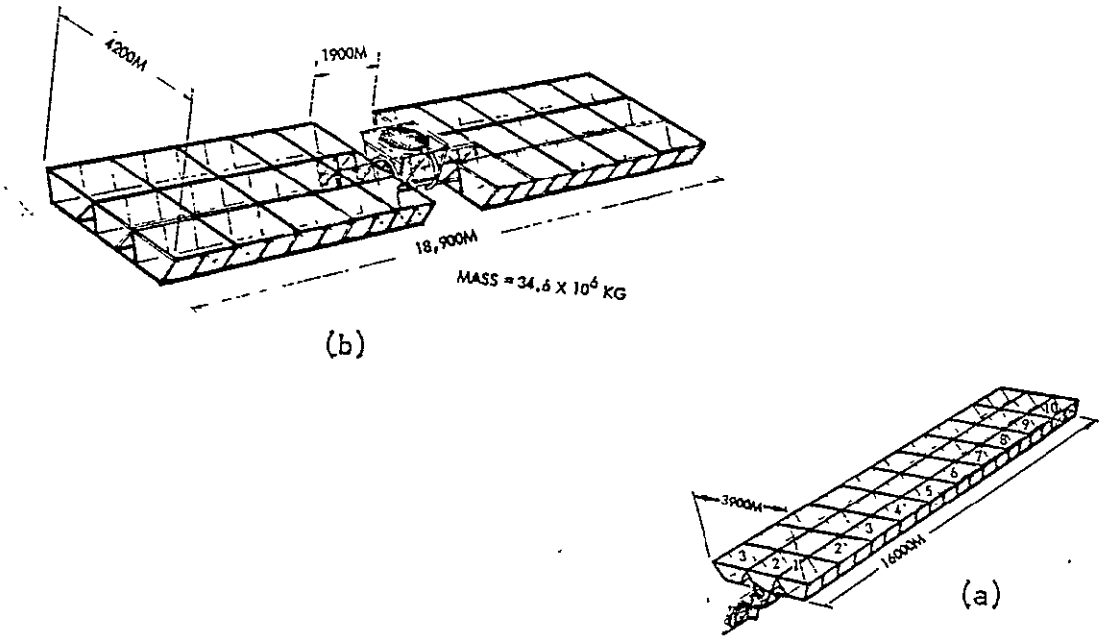


*Figure 1.2-13. Alternate Satellite Concepts (Dec. 1978)*

The solar array panel is 600 m wide × 750 m long. Two of these panels make up a voltage string (45.7 kV). The 600 m width consists of 24 rolls each 25 meters wide. Sizing of the array is based on a solar constant at summer solstice (1319.5 W/m$^2$), an end of life concentration ratio of 1.83, an operating temperature of 113°C and the design factors listed in the figure. A design margin factor of 0.975 is used to match the available area of $27\times10^6$ m$^2$. Total power at the array output is 9.52 GW. Total transmitted power is 6.79 GW. System efficiency factors for the satellite as indicated in Figure 1.2-14.

Mass Properties. Table 1.2-7 presents a summary of the mass for the two alternate concepts.

Ground Receiving Station. The various elements of the initially defined Ground Receiving Station (GRS) are shown in Figure 1.2-15. The major elements shown include the basic receiving/rectifying panels (rectenna), the power distribution and power conversion elements, as well as the various supporting elements (maintenance, facilities, land, etc.). The estimated efficiency of the various links of the ground system power chain is shown in Figure 1.2-14.

The rectenna panels are located in the center of the receiving station and covers a ground area of approximately 80 km$^2$ (approximately 25,000 acres). An additional 32 km$^2$ (approximately 10,000 acres) is required for the distribution and conversion stations plus a security perimeter. Received power is approximately 5.53 GW (at 2.45 GHz). Power available at the utility interface is approximately 4.6 GW ac.

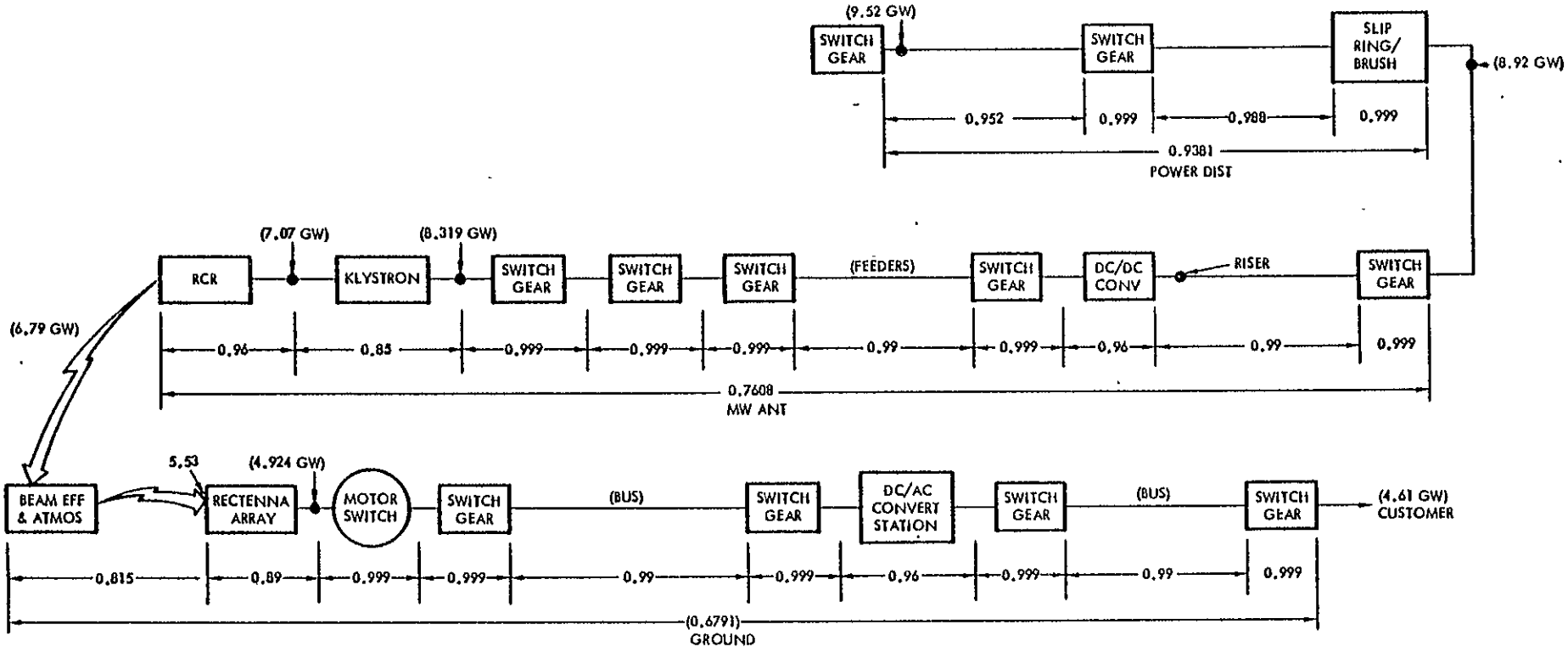


= POWER GEN. X POWER DIST. X MW ANT. X GROUND

(13.35%) (93.81%) (76.08%) (67.91%)

6.47%

(5.6% BASED ON TOTAL INTERCEPTED AREA)

$\eta_{SG} = .999^{14} = .986$

NOTE $.995^{14} = .932$

*Figure 1.2-14. System Efficiency Chain*

*Table 1.2-7. Mass Properties - Alternate Concepts*

| SUBSYSTEM | END-MOUNTED | CENTER-MOUNTED |
|---|---|---|
| SOLAR ARRAY | (11.884) | (10.025) |
| PRIMARY STRUCTURE | .702 | .702 |
| SECONDARY STRUCTURE | .558 | .420 |
| SOLAR BLANKETS | 6.818 | 6.818 |
| CONCENTRATORS | 1.037 | 1.037 |
| POWER DISTRIBUTION & CONDITIONING | 2.603 | 0.882 |
| INFORMATION MANAGEMENT & CONTROL | 0.050 | 0.050 |
| ATTITUDE CONTROL | 0.116 | 0.116 |
| ANTENNA | (14.532) | (14.532) |
| PRIMARY STRUCTURE | 0.120 | 0.120 |
| SECONDARY STRUCTURE | 0.857 | 0.857 |
| TRANSMITTER SUBARRAYS | 7.012 | 7.012 |
| POWER DISTRIBUTION & CONDITIONING | 4.505 | 4.505 |
| THERMAL CONTROL | 1.408 | 1.408 |
| INFORMATION MANAGEMENT & CONTROL | 0.630 | 0.630 |
| SUBTOTAL | 26.416 | 24.557 |
| CONTINGENCY (25%) | 6.604 | 6.137 |
| TOTAL | 33.020 | 30.694 |

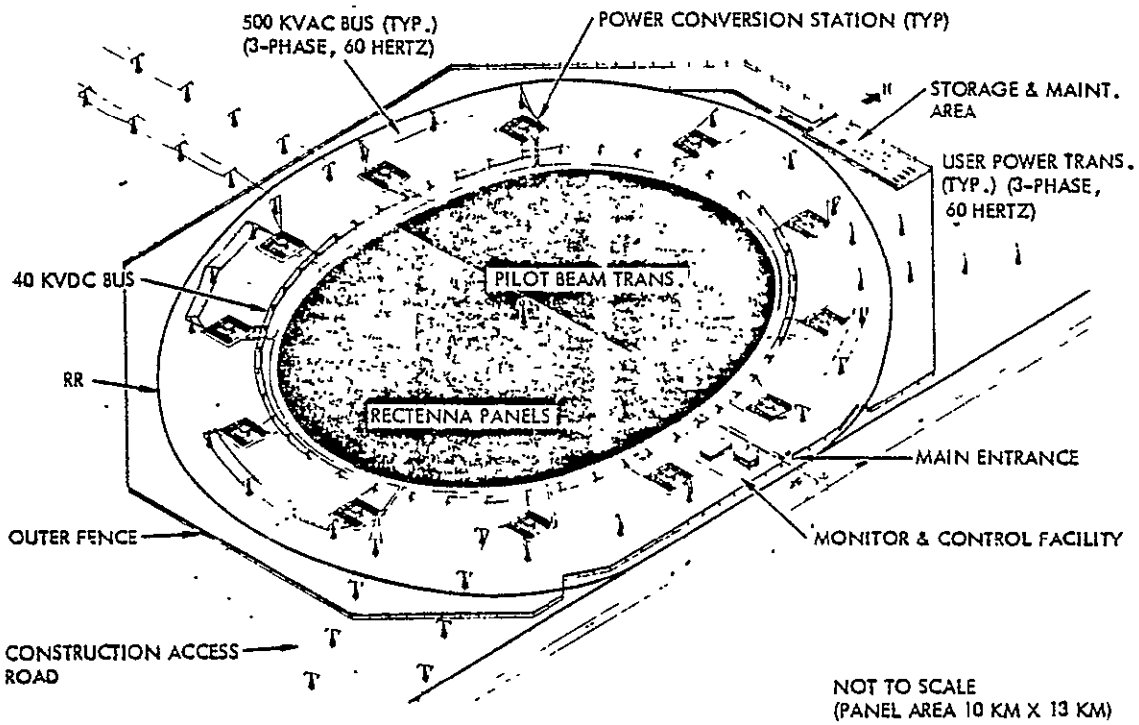


*Figure 1.2-15. Ground Receiving Station*

## 1.3 TRANSPORTATION SYSTEM

Figure 1.3-1 illustrates the baseline transportation flight operations designed to deliver cargo and personnel to geosynchronous (GEO) orbit for SPS construction. Three SPS unique elements of the system are: the Heavy Lift Launch Vehicle (HLLV), the Electric Orbit Transfer Vehicle (EOTV), and the Personnel Orbit Transfer Vehicle (POTV). The HLLV is a two stage parallel burn launch vehicle utilizing LOX/RP in the 1st stage and LOX/$LH_2$ in the second stage. Second stage propellants are crossfed from the 1st stage during 1st stage burn. These stages take off from a vertical position and land horizontally in a manner similar to that of the Shuttle transportation system. Each HLLV launch can transport a $0.227\times10^6$ kg ($0.500\times10^6$ lb) payload to low earth orbit (LEO).

A second major transportation element is the LEO-to-GEO cargo transfer vehicle, the EOTV. The EOTV consists of a basic solar array structure and electric (ion) thruster arrays by which as much as $5.2\times10^6$ kg of cargo can be transferred to a GEO - located construction site. A maximum EOTV load would therefore require 23 HLLV missions.

A third vehicle is designed to transport personnel from the LEO staging area to and from the GEO site. The vehicle consists of a single chemical propulsion stage and a separable crew module. The propulsion element is refueled in GEO for return to LEO. Acceperation and operation restrictions are similar to those imposed for manned space vehicles.

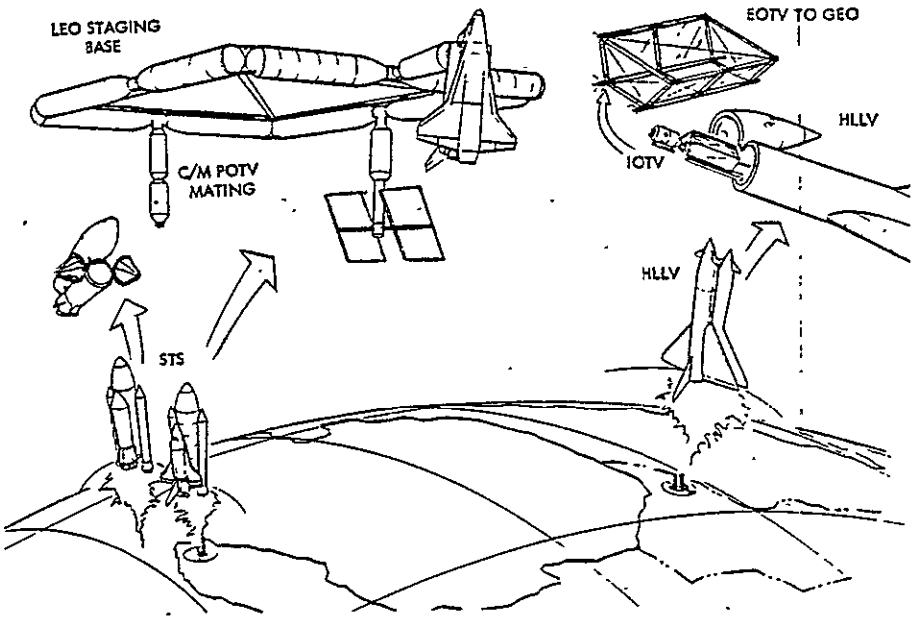


*Figure 1.3-1. SPS Transportation System - LEO Operations Operational Program*

## 1.4 PROGRAM GROUND RULES

Table 1.4-1 shows the program ground rules that affected the development of requirements. Table 1.4-2 shows the general requirements describing the overall SPS program.

*Table 1.4-1. Program Ground Rules*

| |
|---|
| IOC DATE: 2000 |
| PROGRAM SIZE: 2030—300 GW (10 GW/YR) |
| SYSTEM LIFE: 30 YEARS |
| COSTS: 1977 CONSTANT DOLLARS (7.5% DISCOUNT RATE) |
| TECHNOLOGY BASE: 1990 |
| SYSTEMS AVAILABLE IN THE 1980'S: SHUTTLE, IUS, & OTV |

*Table 1.4-2. General Requirements Describing Overall SPS Program*

| Programmatic | Technology |
|---|---|
| *ENERGY SOURCE*—Solar | *OUTPUT POWER*—Power level is defined as constant power level (except during solar eclipse) at utility interface (5 GW, nominal) |
| *CAPACITY*—Assume 2 units/year after initial buildup to 300 GW | *MAXIMUM RADIATION LEVELS*—Maximum radiation level at rectenna is 23 mW/cm$^2$; maximum radiation level at perimeter fence line is 1 mW/cm$^2$ |
| *LIFETIME*—30 years with minimum planned maintenance (should be capable of extended life beyond 30 years with replacement) | *WEIGHT GROWTH*—TBD |
| *IOC*—2000 | *TOTAL WEIGHT*—All summary weight (totals) will be in term of kg/kW$_e$ |
| *BUILDUP*—Provide 10 GW (nominal)/year power buildup rate to utility interface | *ENERGY STORAGE*—To support on-board satellite system operations only |
| *OPERATIONS*—Geosynchronous orbit; 0-degree inclination, circular (35,786-km altitude) | *CONSTELLATION*—Satellite space, 3 degrees |
| *RESOURCES*—Minimum use of critical resources | *FAILURE CRITERIA*—No single point failure may cause total loss of SPS function |
| *COMMERCIALIZATION*—Compatible with U.S. utility networks | *STORAGE*—One year on-board storage without resupply |
| *DEVELOPMENT*—Evolutionary, with provisions for incorporating later technology | *CONSTRUCTION*—Structural material to be graphite composite. |
| | *STARTUP/SHUTDOWN*—TBD |

# 2.0 FUNCTIONAL FLOW BLOCK DIAGRAMS

# 2.0 FUNCTIONAL FLOW BLOCK DIAGRAMS

## 2.1 SATELLITE

### 2.1.1 INTRODUCTION

The functional flow diagrams as presented in this section are intended to provide two types of information for the satellite. The first is a simplified block diagram identifying the basic flow path of the end product, in this case electrical energy, from the point of origin (power generation) to the interface where the energy leaves the satellite (microwave antenna). The function flow diagrams of the ground receiving station are considered in section 2.2. The flow diagrams also identify the interfaces between the various primary and support subsystem and the signal flow paths within the various subsystem concepts. The flows are, at the present time, limited to the active paths necessary for vehicle operations. Passive elements or subsystems, e.g., the structural fasteners and fastening concepts, are not addressed in this section of the requirements document.

The second type of information provided is a summary of the requirements imposed by, imposed upon, and/or derived within the various subsystem configurations.

Examples of the type of information presented (when available) include operating temperatures, pressures, flow rates, voltage and current, pointing limits, etc.

The operating relationship between the various subsystems is illustrated by the block diagram shown in Figure 2.1-1. Operational control of the satellite is provided by the Information Management and Control Subsystem (IMCS).

The IMCS also provides subsystem processing support for all but the very special functions. The only specific case of a special function identified at the present time is the beam programmer element in the microwave antenna subsystem. The man-machine interface has also been established to be at computer-generated display/control terminals. The display/control terminals have not, as yet, been defined -- nor will they be during this contract.

Mechanical interfaces (between structure subsystem and the other subsystems) have not been shown to simplify the diagrams.

### 2.1.2 SUBSYSTEM IDENTIFICATION

The following paragraphs briefly describe details of each of the subsystem concepts defined to date. Important parameters are summarized where appropriate. More specific details of each subsystem element is discussed in greater length in Section 3.0 of this document.

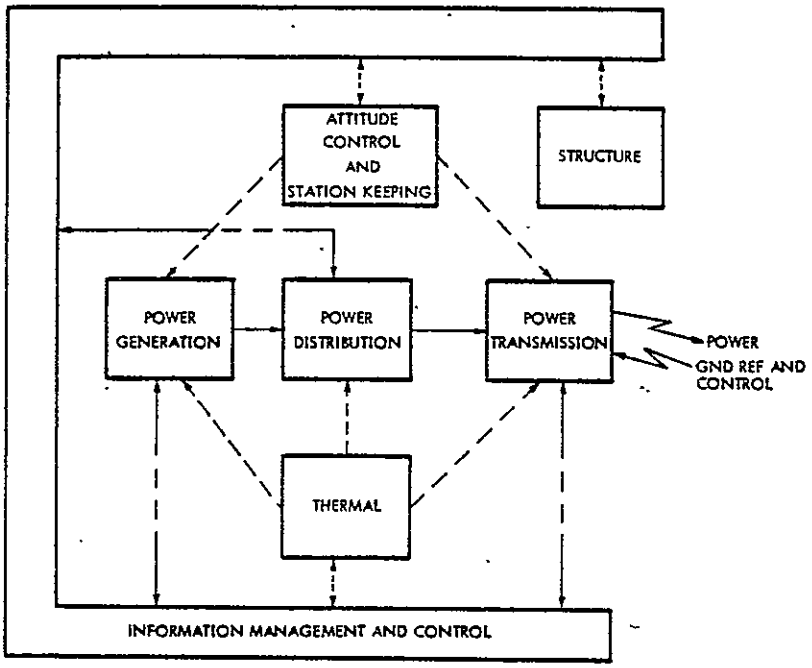


*Figure 2.1-1. SPS Satellite Subsystem Functional Relationships*

## Power Generation

Figure 2.1-2 presents the basic power generation concepts for the photovoltaic concept with a concentration ratio of 2 (CR-2). Switchgear for inter-segment connections are considered part of the power generation group.

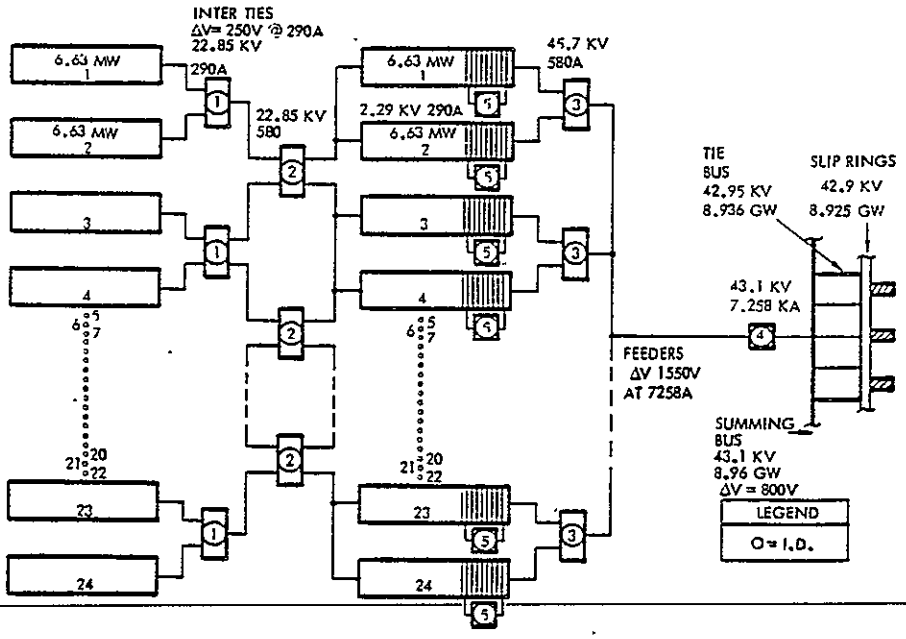


*Figure 2.1-2. Power Generation - Photovoltaic (CR-2)*

## Power Distribution

Figure 2.1-3 presents the functional block diagrams for the satellite power distribution subsystem. The supplementary power source is required during eclipse periods to power critical support systems and to sustain temperature-sensitive subsystem elements such as the MW antenna klystrons.

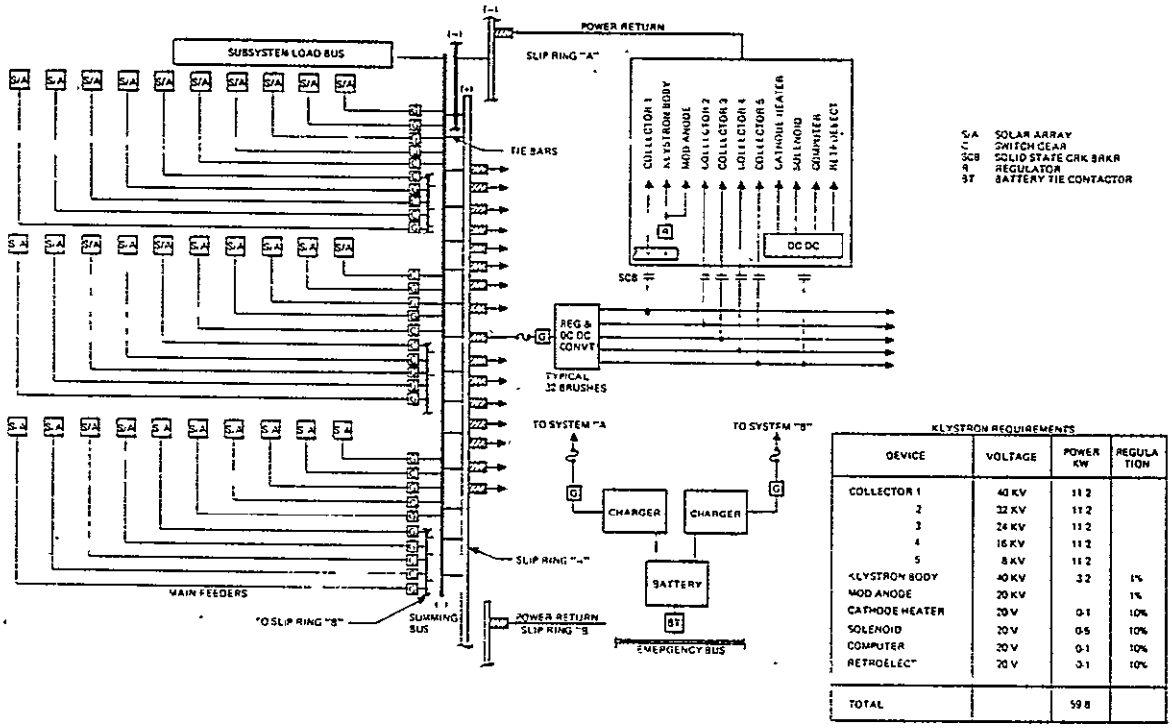


KLYSTRON REQUIREMENTS

| DEVICE | VOLTAGE | POWER KW | REGULATION |
|---|---|---|---|
| COLLECTOR 1 | 40 KV | 11.2 | |
| 2 | 32 KV | 11.2 | |
| 3 | 24 KV | 11.2 | |
| 4 | 16 KV | 11.2 | |
| 5 | 8 KV | 11.2 | |
| KLYSTRON BODY | 40 KV | 3.2 | 1% |
| MOD ANODE | 20 KV | | 1% |
| CATHODE HEATER | 20 V | 0.1 | 10% |
| SOLENOID | 20 V | 0.5 | 10% |
| COMPUTER | 20 V | 0.1 | 10% |
| RETROELECT | 20 V | 0.1 | 10% |
| TOTAL | | 59.8 | |

*Figure 2.1-3. Power Distribution*

Preliminary power estimates for supplementary power indicates a need for a 1-40 MW/h storage capacity. Although subsystem power conditioning and dc-dc conversion is shown as being combined into a single unit, these functions are in actuality composed of many dc-dc converters (or dc-ac converters, if necessary) located throughout the vehicle and/or MW antenna structure. Dc-dc bias voltage converters are located at two locations on the antenna structure and supply the 5 high voltages needed to operate the Klystrons. The maximum number of high voltage dc-dc converters on the antenna is estimated to be 32.

Figures 2.1-4 through 2.1-6 present the subsidiary systems that make up the attitude control and stationkeeping subsystem for the photovoltaic SPS satellite concepts. These three systems are the attitude reference (platform) system, the microwave antenna pointing system (ring drive and gimbal drives), and the tank and engine systems.

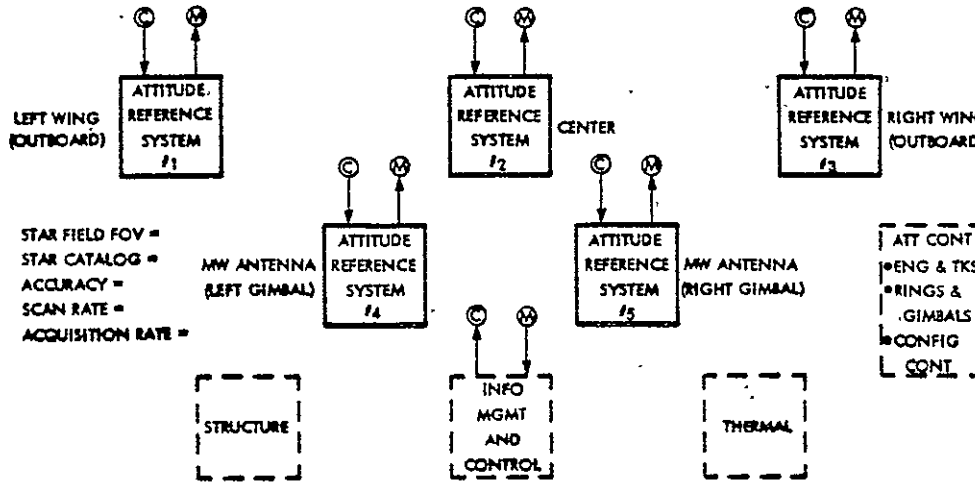


*Figure 2.1-4. ACS - Photovoltaic Attitude Reference System*

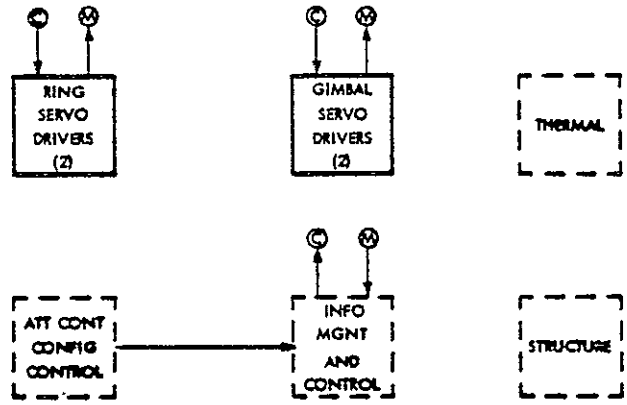


*Figure 2.1-5. ACS - Photovoltaic and Solar Thermal, MW Antenna Pointing System*

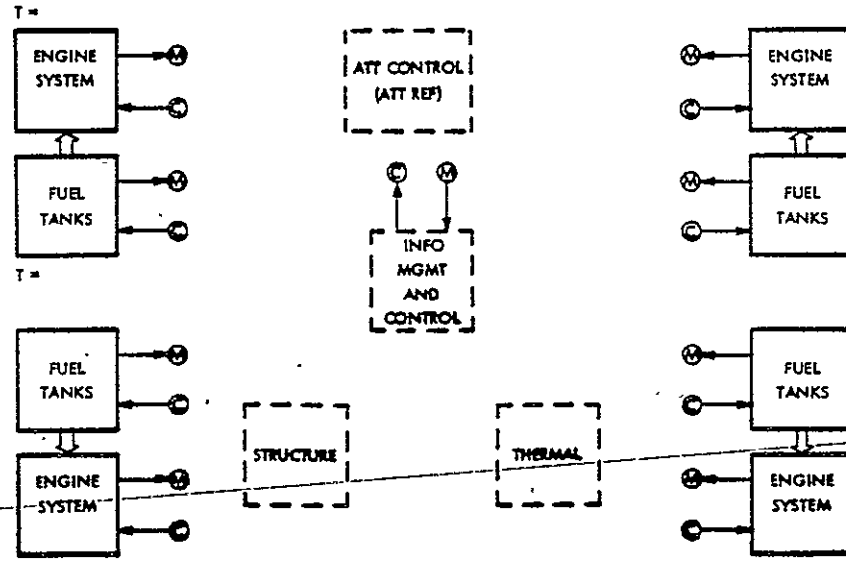


*Figure 2.1-6. ACS - Photovoltaic Tank and Engine System*

## Structure

Figure 2.1-7 presents the only active (instrumentation) portion of the structures subsystem defined to date. The depicted system monitors the location of corner reflectors so as to establish the degree of distortion existing in reflectors, mirrors, and other elements of the entire satellite configuration. Each of the 35 laser transits is assumed capable of scanning and calculating the location of at least 100 to 200 reflectors distributed over the surface of the mirror, solar arrays, and primary support structure.

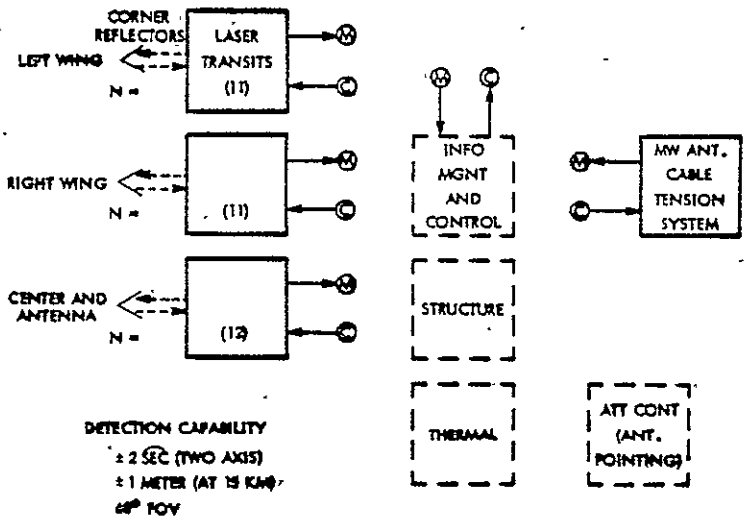


*Figure 2.1-7. Structure - Configuration Monitor - Photovoltaic (CR-2)*

## Thermal

Figure 2.1-8 presents a general summary of the thermal requirements. As more information regarding temperature, status, etc., is defined, it will be added.

## Microwave Antenna

Figure 2.1-9 presents the beam generation and control portion of the microwave antenna subsystem. Most of the paths shown operate at frequencies of approximately 2.45 GHz and are, therefore, either coaxial cable, strip lines, or waveguides. The beam programmer is a special-purpose dedicated processor design to accomplish high-speed RF pointing control via the digital diode phase shifter. External processing is limited to much slower, large element antenna pointing and performance monitoring and control.

## Information Management and Control

This subsystem provides for overall satellite operational control, as well as performing system status monitoring.

PHOTOVOLTAIC, GaAlAs, CR = 2

- SOLAR ARRAY

$T_{BLANKET} = 113°C$

- POWER DISTRIBUTION

| | |
|---|---|
| NON-ROTATING | T = -18°C |
| ROTATING | T = 85°C |
| ANTENNA | T = 79°C |

- ROTARY JOINT

$T \geq 65°C$
$T \leq 130°C$

- INFORMATION MGMT

$T_{MAX} = 60°C$
$T_{MIN} = 60°C$

- ANTENNA

CAVITY RADIATOR
T = 200°C

COLLECTOR RADIATOR
T = 700°C

*Figure 2.1-8. Thermal Requirements*

Figure 2.1-10 depicts the overall processor hierarchy appropriate to the basic photovoltaic (CR-2) configuration.

Figure 2.1-11 presents the typical architecture of the microwave antenna IMCS system.

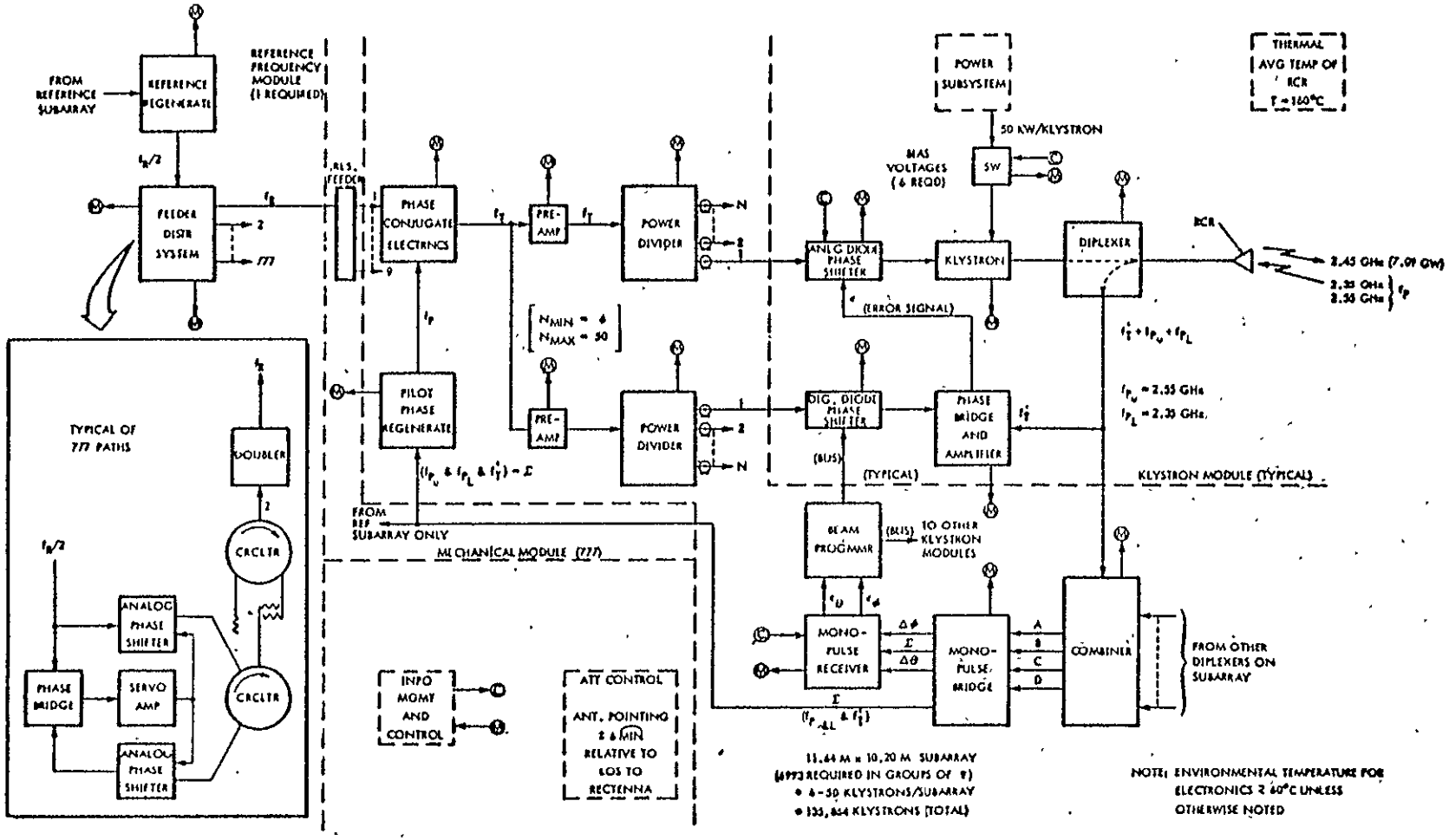


*Figure 2.1-9. Microwave Antenna - Beam Generation and Control*

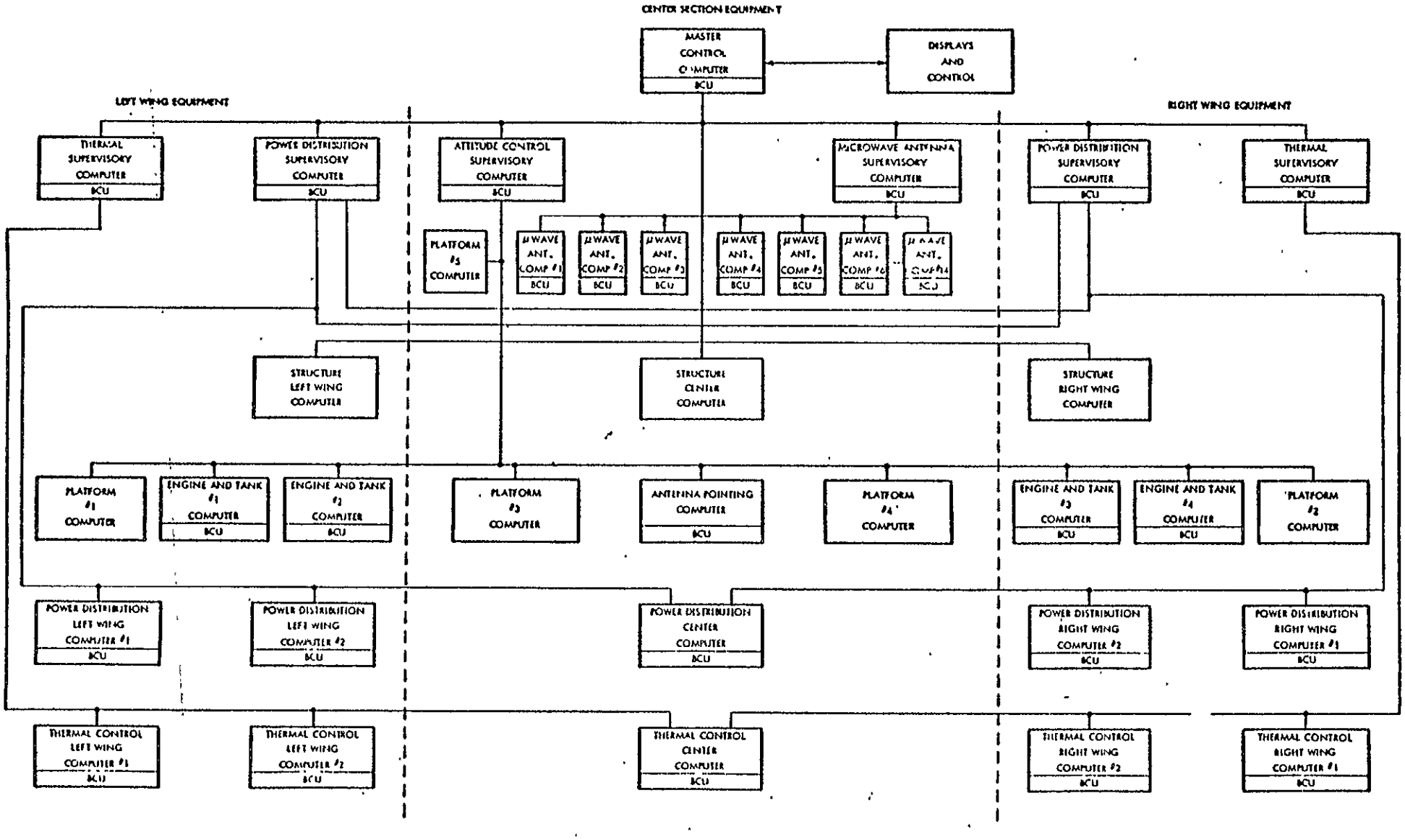


*Figure 2.1-10. SPS IMCS Top-Level Block Diagram*



Satellite Systems Division
Space Systems Group
Rockwell International

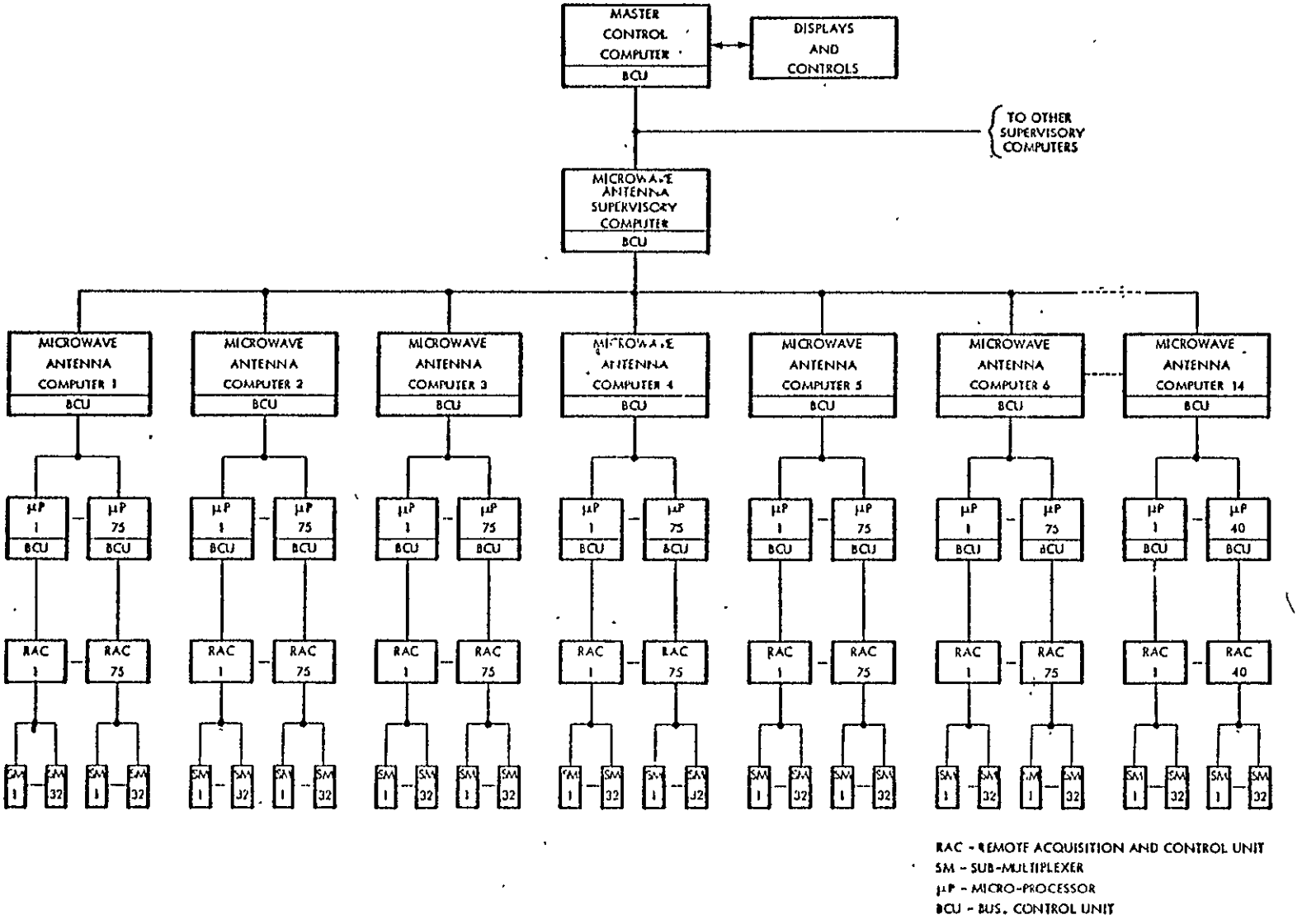


*Figure 2.1-11. IMCS Microwave Antenna*

## 2.2 GROUND RECEIVING STATION

### 2.2.1 INTRODUCTION

The functional flow diagrams for the Ground Receiving Station (GRS) are in many respects similar to those established for the SPS satellite. This becomes apparent when considering the relationship of the various subsystems and interfaces as shown in Figure 2.2-1. As on the satellite the Information Management and Control Subsystem (IMCS) provides primary control and system monitoring with the man-machine interface primarily used for judgement and system reconfiguration.

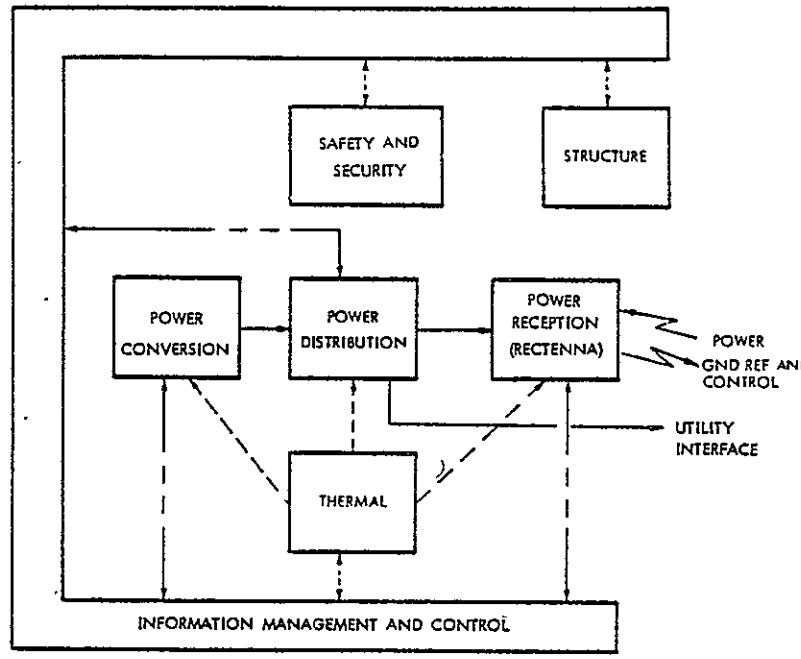


*Figure 2.2-1. SPS Ground Receiving Station Subsystem Functional Relationships*

### 2.2.2 SUBSYSTEM IDENTIFICATION

The following paragraphs briefly describe details of the subsystem concepts considered to date. Important parametric data are estimated and summarized where appropriate. More specific details of each subsystem element is discussed in greater detail in Section 3.0 of this document.

Power Reception

Figure 2.2-2 presents the basic microwave receiving/rectifying element (rectenna) located at the ground site. The receiver/rectifying elements (dipoles and rectifying diodes) are symetrically located on the panels as shown in Figure 2.2-3. Individual diode rectifier outputs are series connected to produce voltage strings slightly greater than 40 kV.

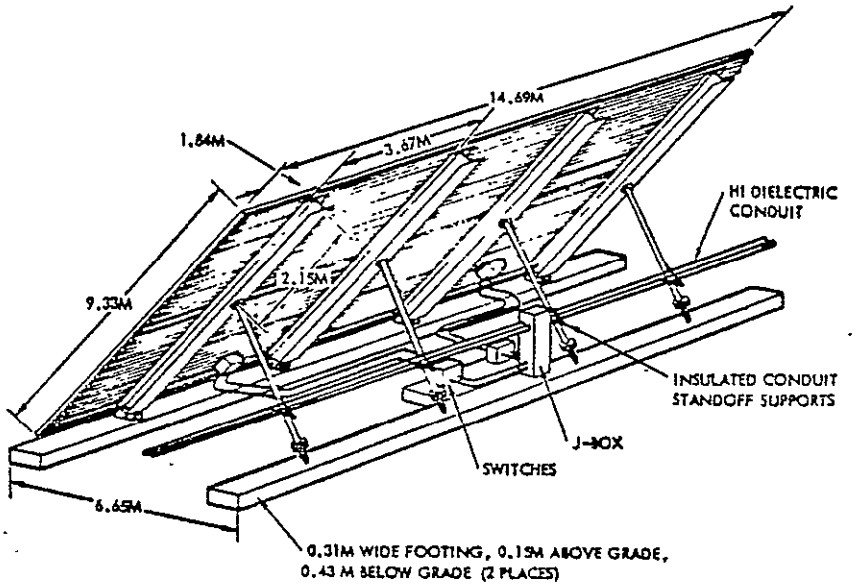


*Figure 2.2-2. Basic Rectenna Panel Assembly*

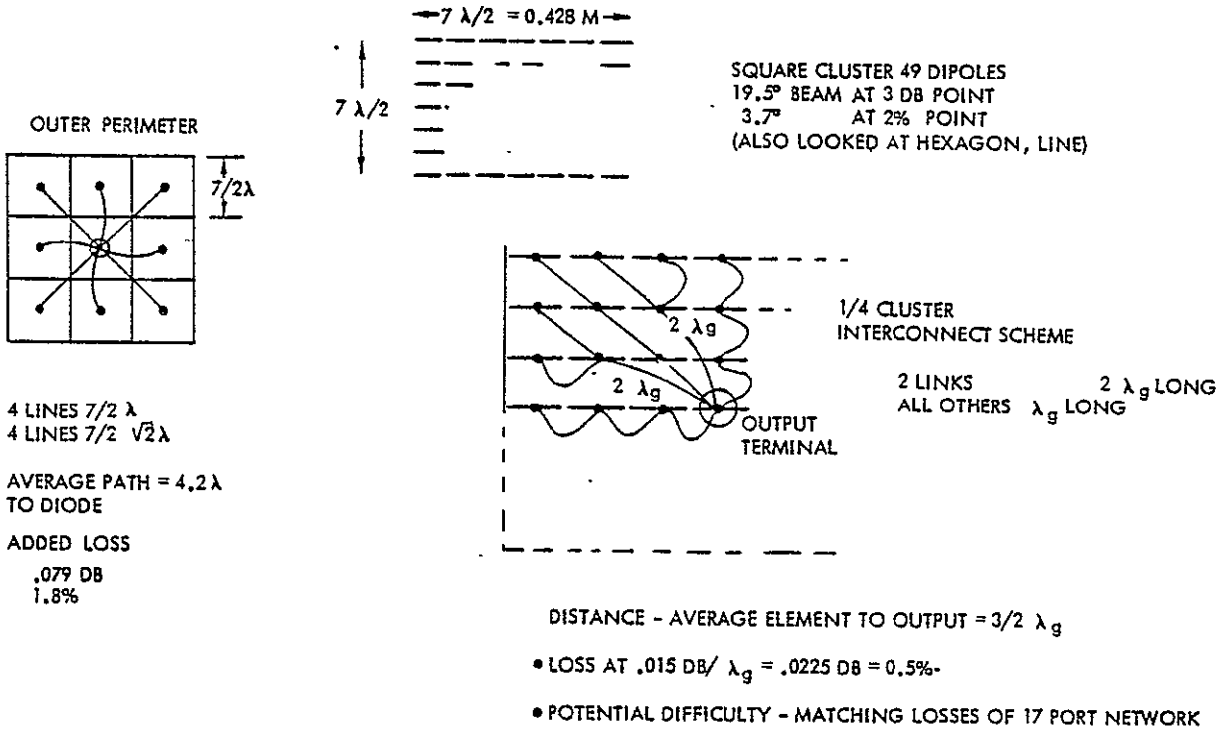


*Figure 2.2-3. Panel Dipole/Diode Cluster Layout*

Power Distribution

Figure 2.2-4 presents the functional block diagram for the GRS. Power to supply the various operating systems during periods when the satellite source is not transmitting power, or during startup periods, is provided by cross-feeds to other auxiliary power sources not shown in this diagram.

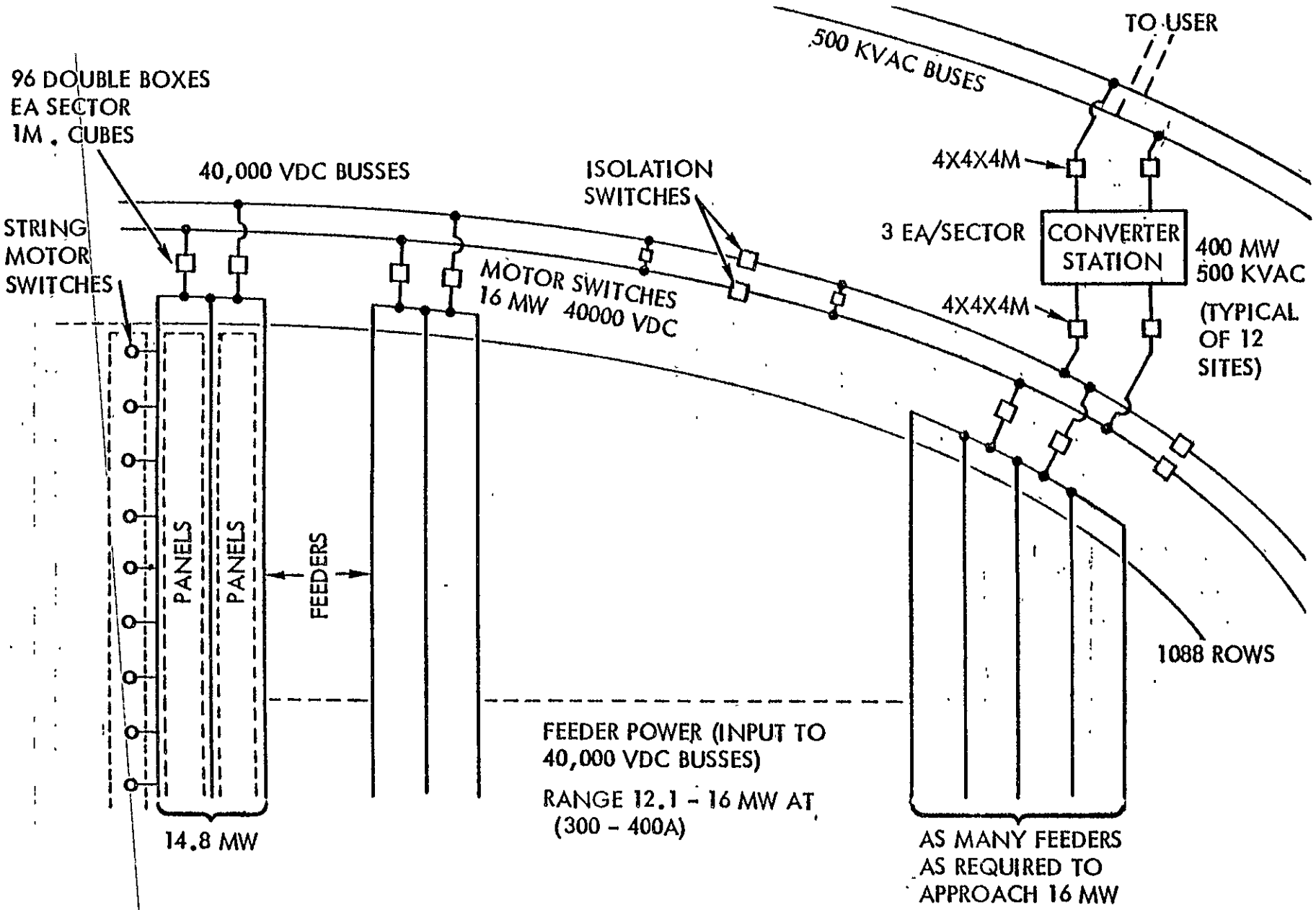


*Figure 2.2-4. Ground Receiving Station Schematic Block Diagram - Preliminary*



Satellite Systems Division
Space Systems Group
Rockwell International

Included in the power distribution networks are the voltage feeders run behind each rectenna panel, the 40 kV dc and 500 kV ac buses as well as the voltage string isolating motor switches and system protecting switchgear.

Power Conversion Stations

Figure 2.2-5 presents a simplified block diagram of solid state power conversion stations situated around the perimeter of the rectenna area. Initial power estimates result in a preliminary count of 12 stations for the 4.61 GW capability of a basic GPS site.

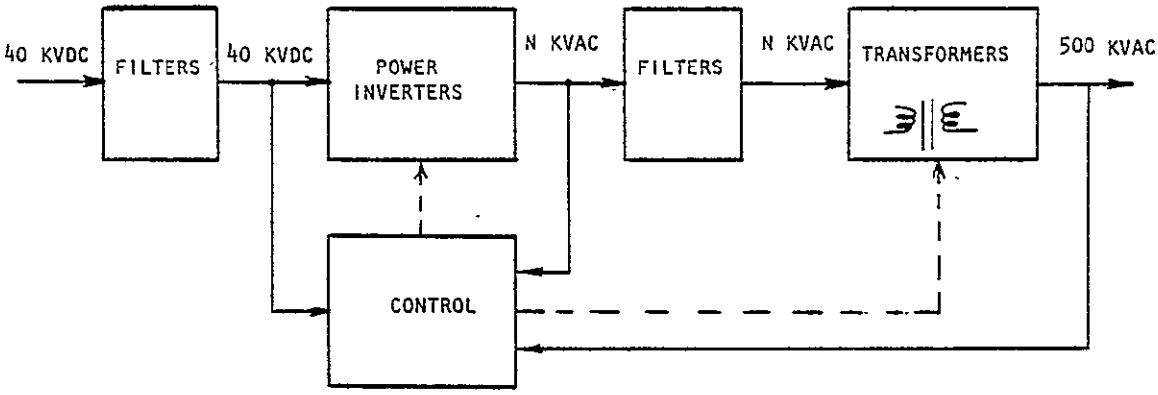


*Figure 2.2-5. Power Conversion Station Functional Block Diagram - Simplified*

Structure

The basic structure of the rectenna panel is shown in Figure 2.2-2. Figure 2.2-6 illustrates a typical area of the rectenna farm. Also shown in Figure 2.2-6 is a panel installation mechanism that can be used during initial field buildup or to replace defective or damaged panels during maintenance procedures. Details of support facilities, storage areas, and other required structures have not been established, and will be determined as part of other, yet to be established, studies.

Thermal

The specifics of thermal control and/or shielding have not, as yet, been determined. Details will be established by future studies (TBD).

Safety and Security

Elements of security and safety are TBD.

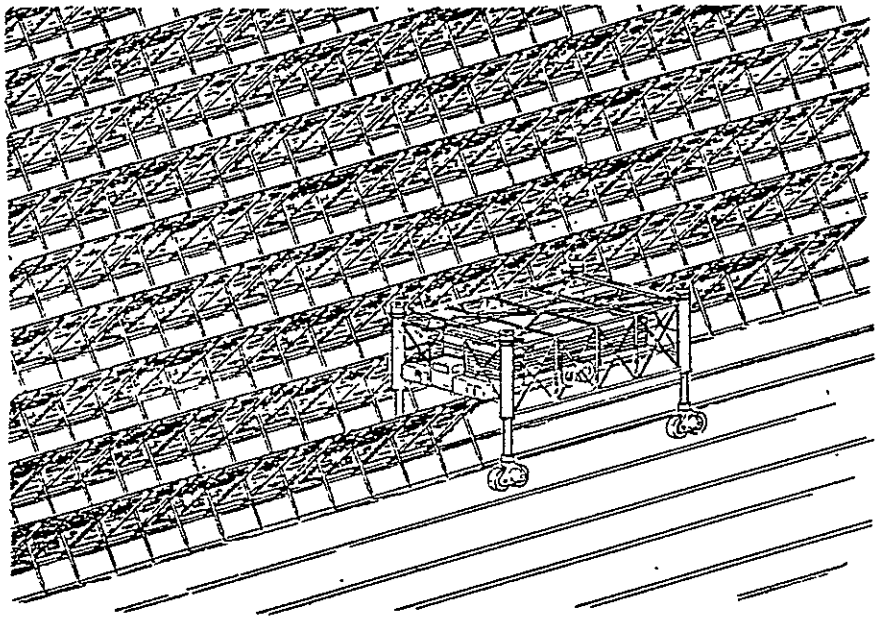

*Figure 2.2-6. Panel Installation Operations*

Information Management and Control

This subsystem provides for overall ground site control as well as all on site system status monitoring. With the addition of appropriate communication channels the on site IMCS can also provide for off-site safety and security.

Figure 2.2-7 depicts a possible overall processor hierarchy appropriate to the needs of the GRS. Note that the selected architecture is similar to that selected for the satellite. This was done because the basic requirements (e.g., many parallel operations using relatively simple algorithms and very large numbers of measurements and controls), are similar.

The basic architecture of the individual subsystems have not been defined because of the limited details available.

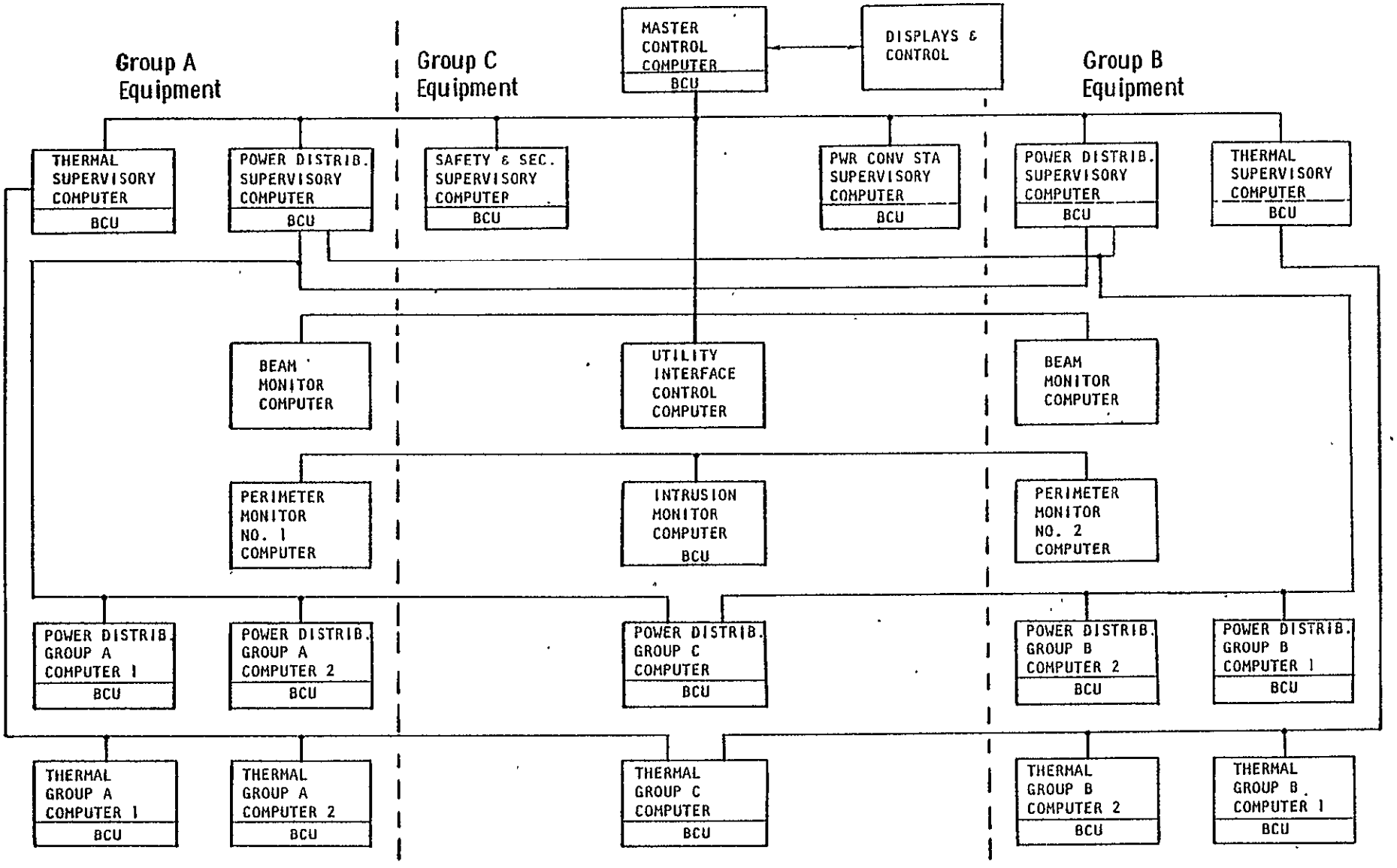


*Figure 2.2-7. IMCS Processor Hierarchy - Typical Ground*

# 3.0 SUBSYSTEM

3.0 SUBSYSTEM

# 3.0 SUBSYSTEM

## 3.1 SATELLITE

The following subsections of this document describe the requirements, the major assemblies, characteristics, and definitions for the seven satellite subsystem groups which were developed during the continuing SPS evaluation. These subsystems (or subsystem groups) are listed below.

- Power Conversion
- Microwave Transmission
- Power Distribution and Control
- Structure
- Attitude Control and Stationkeeping
- Thermal Control
- Information and Management Control

More detailed discussions/descriptions of the identified subsystems may be found in Volume II.

### 3.1.1 POWER CONVERSION

The baseline power conversion subsystem consists of solar cells, blankets, attachment devices, reflector membranes, and associated attachment devices. Gallium aluminum arsenide (GaAlAs) cells have been selected as the baseline solar cell. The cell is fastened to a thin-film Kapton substrate with an FEP adhesive. The photovoltaic power conversion subsystem is designed for a nominal geometric concentration ratio of 2.

Functional Requirements and Block Diagrams

The functional requirements for the photovoltaic power subsystems are listed in Table 3.1-1. The system efficiency block diagram is shown in Figure 3.1-1. Shown in the figure are power levels, efficiencies, degradation factors and solar cell area requirements. A simplified integrated block diagram for the CR-2 concept is presented in Figure 3.1-2.

Major Assemblies

The major assemblies and components that are required for the photovoltaic subsystem are shown in Figure 3.1-3.

*Table 3.1-1. Solar Array Functional Requirements*

**PROGRAMMATIC**

*ENERGY SOURCE* - Solar
*CAPACITY* - 9.5 GW (nominal) delivered to power distribution networks
*LIFETIME* - 30 years with minimum planned maintenance (should be capable of extended life beyond 30 years with replacement)
*IOC DATE* - 2000
*OPERATIONS* - Geosynchronous orbit; 0-degree inclination, circular (35,786 km altitude)
*RESOURCES* - Minimum use of critical resources
*COMMERCIALIZATION* - Compatible with United States utility networks
*DEVELOPMENT* - Evolutionary, with provisions for incorporating later technology

**TECHNOLOGY**

*OUTPUT POWER* - Power level is defined as constant power level (except during solar eclipse)
*MASS GROWTH* - 25 percent
*ENERGY STORAGE* - To support on-board satellite system operations only
*FAILURE CRITERIA* - No single-point failure may cause total loss of SPS function
*ENERGY PAYBACK* - Less than 3 years
*COST* - Competitive with ground-based power generation within lifetime of SPS project
*STORAGE* - One year on-board storage without resupply

**OPERATION**

| Mode | Assembly | Functions |
|---|---|---|
| *CONSTRUCTION* | Subsystem | None |
| *INTERORBIT TRANSFER* | Subsystem | None |
| *OPERATIONS* | Subsystem | Steady-state operation |
| | Reflector | Sized for end-of-life (EOL) power rating |
| *ECLIPSE* | Subsystem | Shut down before entering eclipse |
| | | Standby (zero power) |
| | | Turn on after leaving eclipse and arrays reach equilibrium temperature |
| | Batteries | Supply power for essential functions |
| *FAILURE/MAINTENANCE* | Subsystem | Redundant operation, auto shutdown, manual startup |
| | Power module* | Shut down and isolate failed module; replace solar cell blanket and/or reflector |
| *CHECKOUT* | Subsystem | Fail-safe checks; control response |

*Solar cell/blanket/reflector module

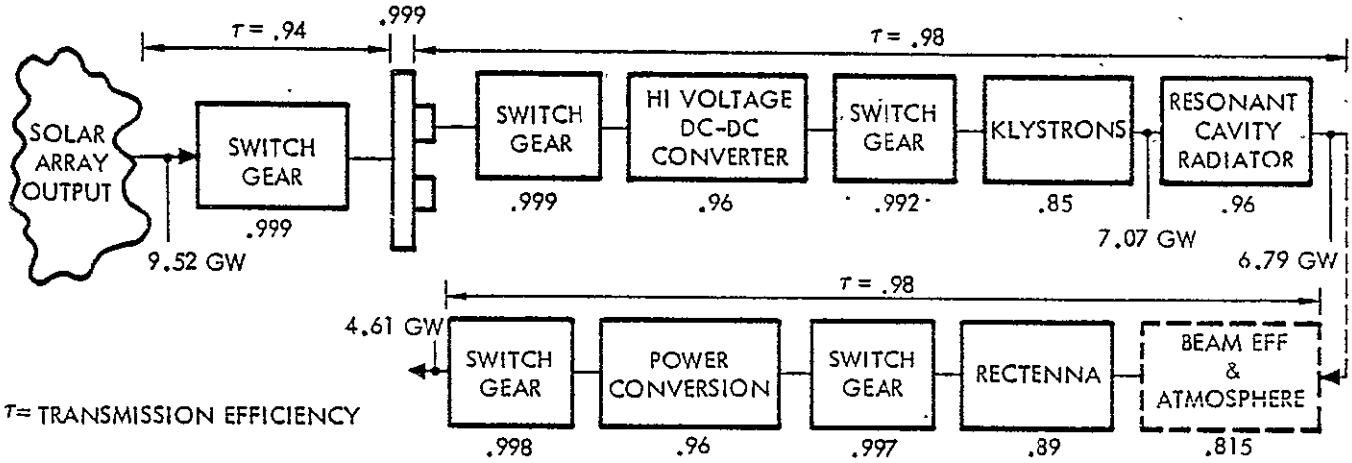


*Figure 3.1-1. System Efficiency Block Diagram*

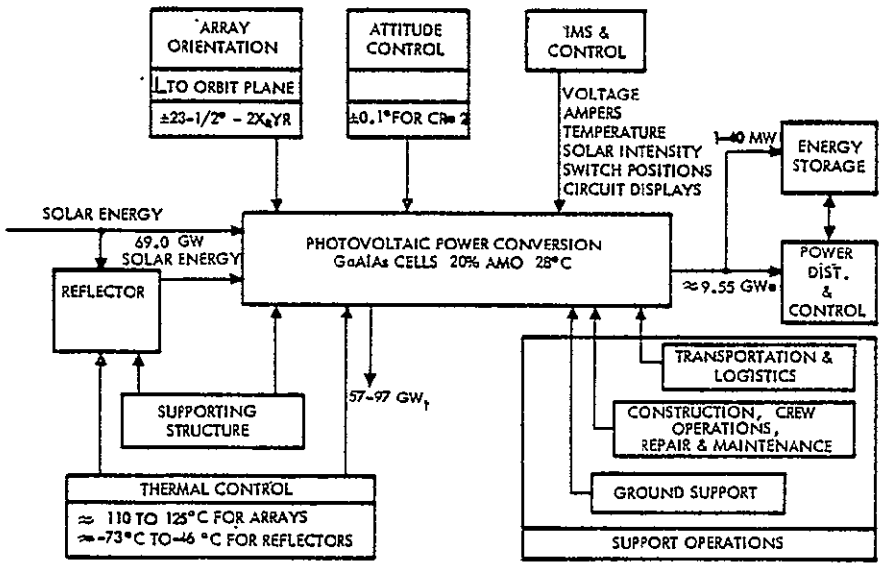


*Figure 3.1-2. Simplified Integrated Block Diagram - Photovoltaic (CR-2)*

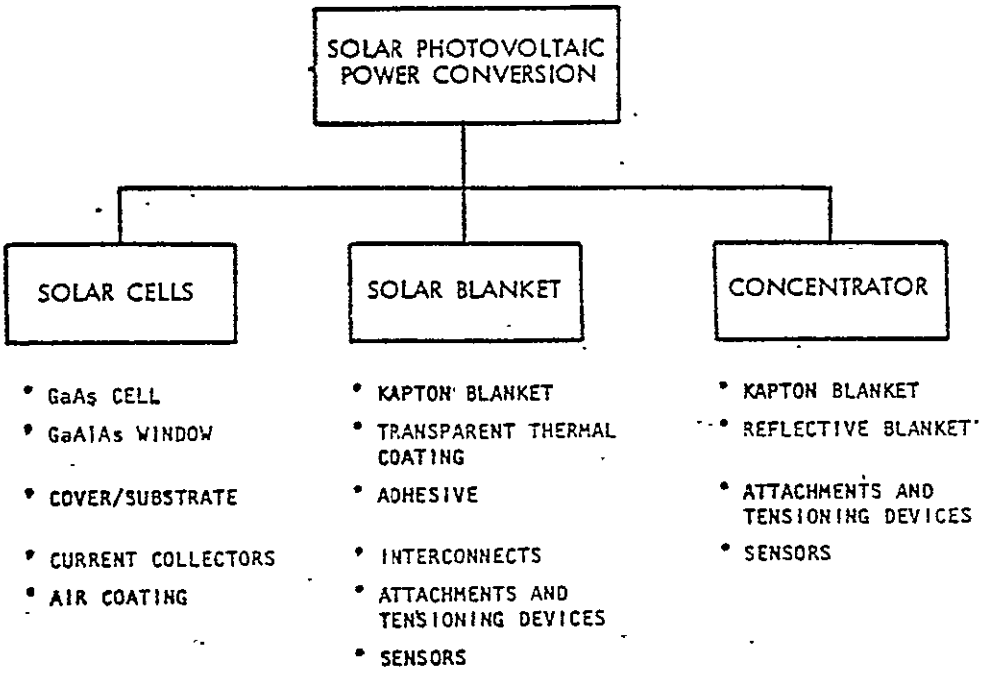


*Figure 3.1-3. Assembly Tree - Solar Photovoltaic Power Conversion*

Solar Cells. The solar cell used in the SPS design is a GaAlAs cell having an efficiency of 20 percent at Air Mass Zero (AMO) and 28°C. The cell consists of the GaAlAs junction, GaAlAs window, cover/substrate, current collectors, and an anti-reflection coating. The basic cell design is the inverted GaAs/sapphire design having a weight of 0.252 kg/m$^2$. The various cell designs and the selected design are shown in Figure 3.1-4. The design cell has a 20-μm sapphire substrate upon which is grown a 5-μm single crystal GaAs junction. A 500-Å GaAlAs window is then deposited on the 5-μm junction. The voltage and current characteristics of the cell as a function of operating temperature are shown in Figure 3.1-5. The cell build up to form a submodule for the solar blanket is shown in Figure 3.1-6.

Solar Blanket. The solar blanket consists of a 25-μm Kapton membrane upon which the cells are fastened with a thermosetting FEP adhesive. Also included in the blanket are the interconnects, transparent thermal coating as may be required for thermal control, attachments, tensioning devices, and sensors. The solar cell blankets will be manufactured in blanket form and the solar cells attached. This assembly will then be rolled up on a drun type canister. It is postulated that the blankets will be 25 m wide by approximately 750 m in length. The canisters are then transported to orbit where the blankets are deployed via a roll-out deployment-type operation. The solar blanket consists of 1 square meter modules that are hooked together in series and parallel and the voltage, current, power output and a typical layout is shown in Figure 3.1-7.

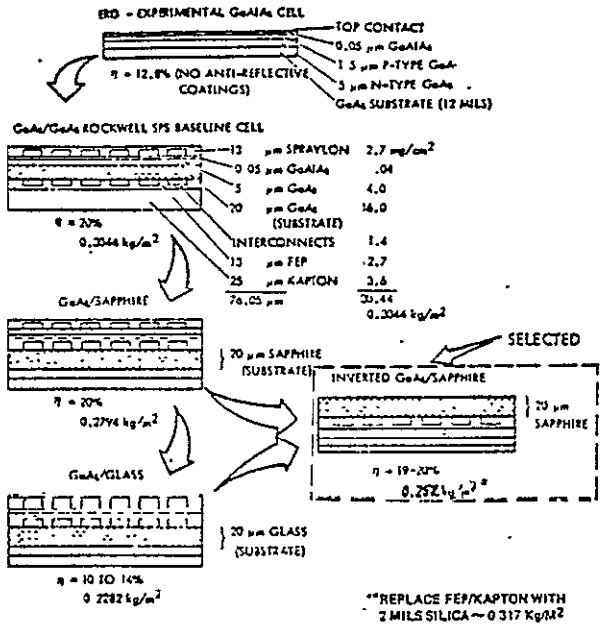


*Figure 3.1-4. Alternate Solar Cell Design*

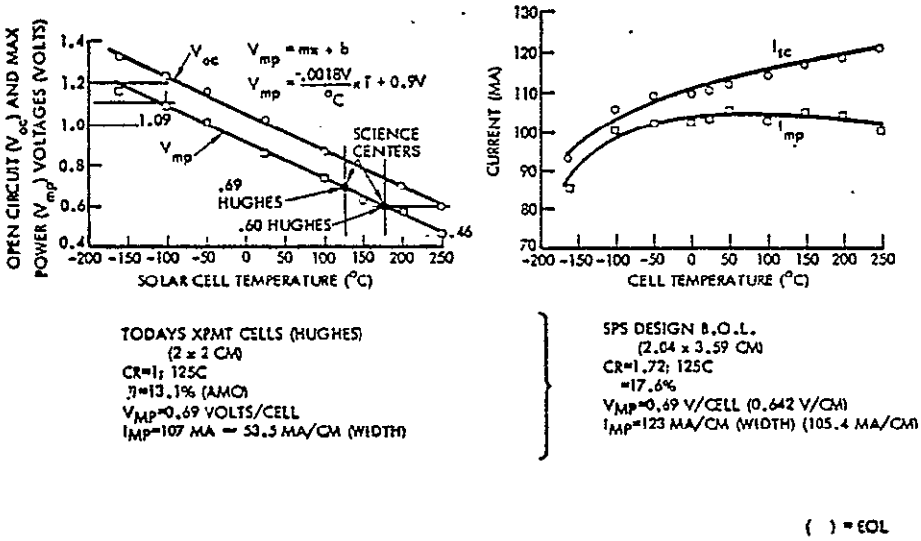


*Figure 3.1-5. GaAlAs Solar Cell Voltage and Current Characteristics*

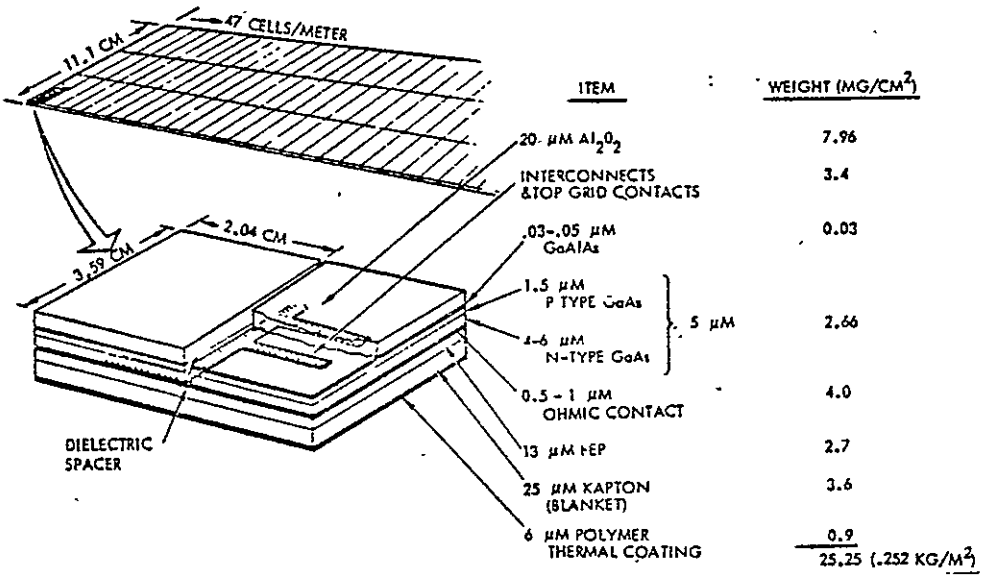


*Figure 3.1-6. GaAlAs Solar Cell Blanket Cross Section*

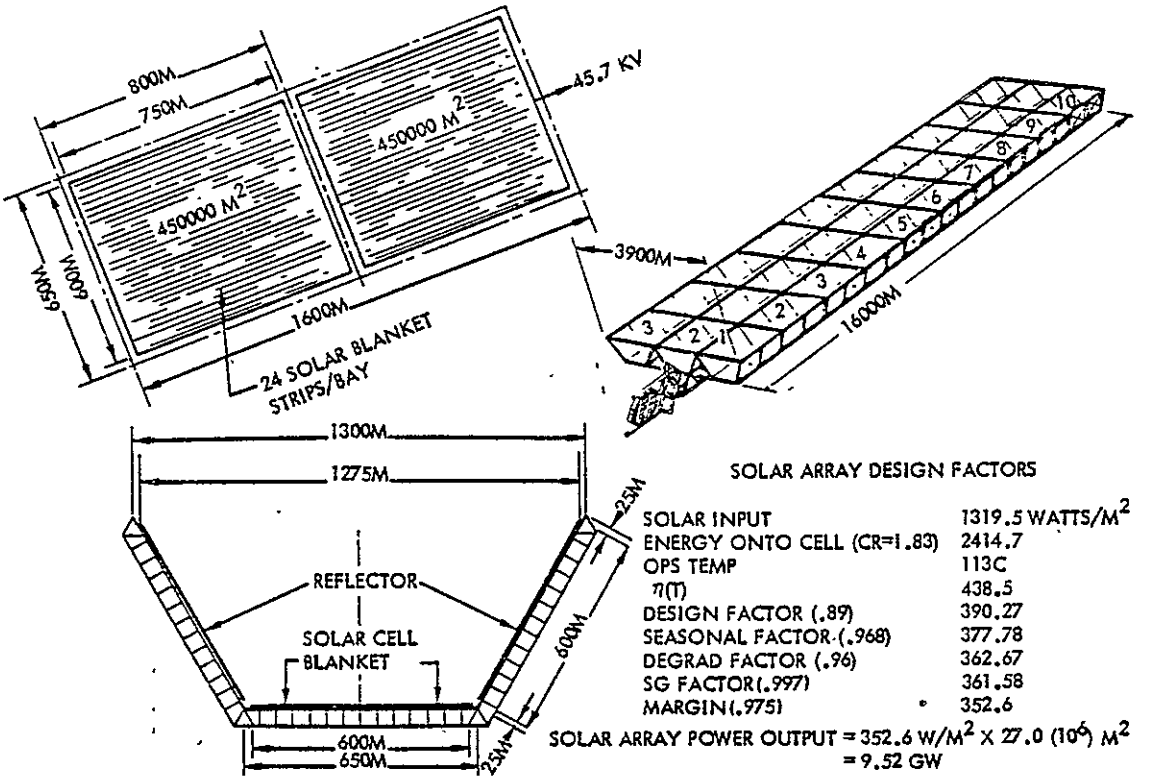


*Figure 3.1-7. Solar Panel Power Output - Watts/m²*

Concentrators. Thin reflector membranes are used on the SPS to reflect the sun onto the solar cell surfaces and obtain a nominal concentration ratio of 2. The reflector is made of 12.5 μm (0.5 mil) aluminized Kapton. Reflectivity of the reflector was taken at 0.9 BOL and 0.72 EOL. The reflector membrane has a mass of 0.018 kg/m$^2$. The reflective membranes are mounted on the structure using attachments and tensioning devices. Tensioning based on structural limit of the existing beam design (with safety factor of 1.5) indicates that tensioning of up to 75 psi can be used.

## Design and Performance Characteristics

The design and performance characteristics of the photovoltaic system are presented in Tables 3.1-2 and 3.1-3. Operational parameters, materials of construction, deployed and planform areas and weights are presented for the subsystem.

*Table 3.1-2. GaAlAs Solar Cell and Blanket Preliminary Specification (CR-2)*

| ITEM | CHARACTERISTIC |
|---|---|
| ARRAY INTERCEPTED ENERGY | 69 GW |
| CELL η AT 28°C, AMO | 20% |
| CELL η AT 113°C, AMO | 18.15% |
| ARRAY OUTPUT TO DISTRIB. BUS EOL | 9.52 GW |
| ARRAY OUTPUT VOLTAGE | 45.7 kV |
| CELL OUTPUT VOLTAGE AT 113°C | 0.7 V |
| CELLS IN SERIES | 65,000 |
| SOLAR CELL SUBPANEL SIZE | 600×750 m |
| NUMBER OF BAYS PER SPS | 60 |
| ARRAY DESIGN FACTOR | 89% |
| REFLECTIVITY & DEGRADATION | 0.90 BOL, 0.72 EOL |
| CONCENTRATION RATIO | |
| GEOMETRIC | 2 |
| BOL | 1.9 |
| EOL | 1.86 |
| SOLAR CELL CONSTRUCTION | |
| COVER | 20 μm SAPPHIRE |
| CELL | 5 μm GaAlAs |
| INTERCONNECT | 12.5 μm SILVER MESH |
| SUBSTRATE | |
| ADHESIVE | 12.5 μm FEP |
| FILM | 25 μm KAPTON |
| TRANSPARENT THERMAL COATING | 6 μm POLYMER |
| SPECIFIC WEIGHT | 0.2525 kg/m$^2$ (0.0516 lb/ft$^2$) |
| DEPLOYED CELL & BLANKET AREA PLANFORM | 62.4 km$^2$ |
| SOLAR CELL AREA | 27 km$^2$ |
| REFLECTOR SURFACE AREA | 54 km$^2$ |
| MASS | |
| SOLAR CELLS | 6.818×10$^6$ kg |
| REFLECTORS | 1.037×10$^6$ kg |
| TOTAL MASS | 7.855×10$^6$ kg |

*Table 3.1-3. SPS Reflector Preliminary Specification (CR-2)*

| Item | Characteristic |
|---|---|
| Material | Aluminized Kapton |
| Kapton thickness | 12.5 um |
| Kapton specific gravity | 1.42 (0.018 kg/m$^2$) |
| Aluminized coating thickness | 400 angstrom units |
| Weight of aluminized coating | 96 kg/km$^2$ |
| Reflector surface protective film coating | Quartz or calcium fluoride |
| Reflector subpanel size | 600 × 750 m |
| Number of reflector panels | 120 |
| Reflector reflectivity/degradation | 0.90 BOL, 0.72 EOL |
| Concentration ratio geometric | 2.0 |
| Concentration ratio | 1.9 BOL, 1.86 EOL |
| Reflector slant angle from horiz. | 60 degrees |
| Operating temperature | |
| Top reflectors | -52°C |
| Inboard bottom reflectors | -46°C |
| Outboard bottom reflectors | -73°C |
| Total area of reflectors | 61.2×10$^6$ m$^2$ |
| Total weight of reflectors | 1.012×10$^6$ kg |

Subsystem Definition and Interfaces

The subsystem interfaces are shown in Table 3.1-4 for the photovoltaic conversion subsystem. The major interfaces include the array orientation, attitude control, IMS and control, energy storage, power distribution, structure, thermal control, and support operations.

### 3.1.2 MICROWAVE POWER TRANSMISSION SYSTEM

The microwave power transmission system (MPTS) consists of a set of dc-microwave conversion devices, feeding a microwave array and a ground array of antenna/rectifier assemblies for microwave-dc conversion (rectenna). The ground array will be discussed in Section 3.2.

The array is phased by means of a pilot beam formed at the rectenna which is received by the array and used to form the power converter drive signals.

Functional Requirements and Block Diagrams

A functional block diagram of the satellite array assembly is shown in Figure 3.1-8. The requirements for the various operating modes are listed in Table 3.1-5.

Figure 3.1-9 shows how the array is formed of mechanical assemblies supported by two grids of catenaries anchored to the hexagon frame. These assemblies consist of nine 10.2 m by 11.64 m subarrays. Each subarray is formed of a variable number of power converter/radiator modules, depending on the power density required.

*Table 3.1-4. Solar Array Interfaces*

| Subsystem Interface | Interface Requirement | Value or Comment |
|---|---|---|
| Power distribution | Voltage<br>Power (EOL) | 45.7 kV<br>9.52 GW |
| Thermal<br>Array<br>Reflector | <br>Temperature<br>Temperature | <br>113°C<br>-46°C to -73°C |
| Attitude control | Misorientation and misalignment angle<br>Orientation | 0.1° maximum<br>Long axis perpendicular to orbital plane |
| Structure | Loads<br>Deflections | Apply forces to adequately tension array and reflector up to 75 psi<br>Reflector deflections/misalignment <0.1°; array deflection/misalignment <3° |
| IMS | Control and monitoring of power subsystem | TBD |

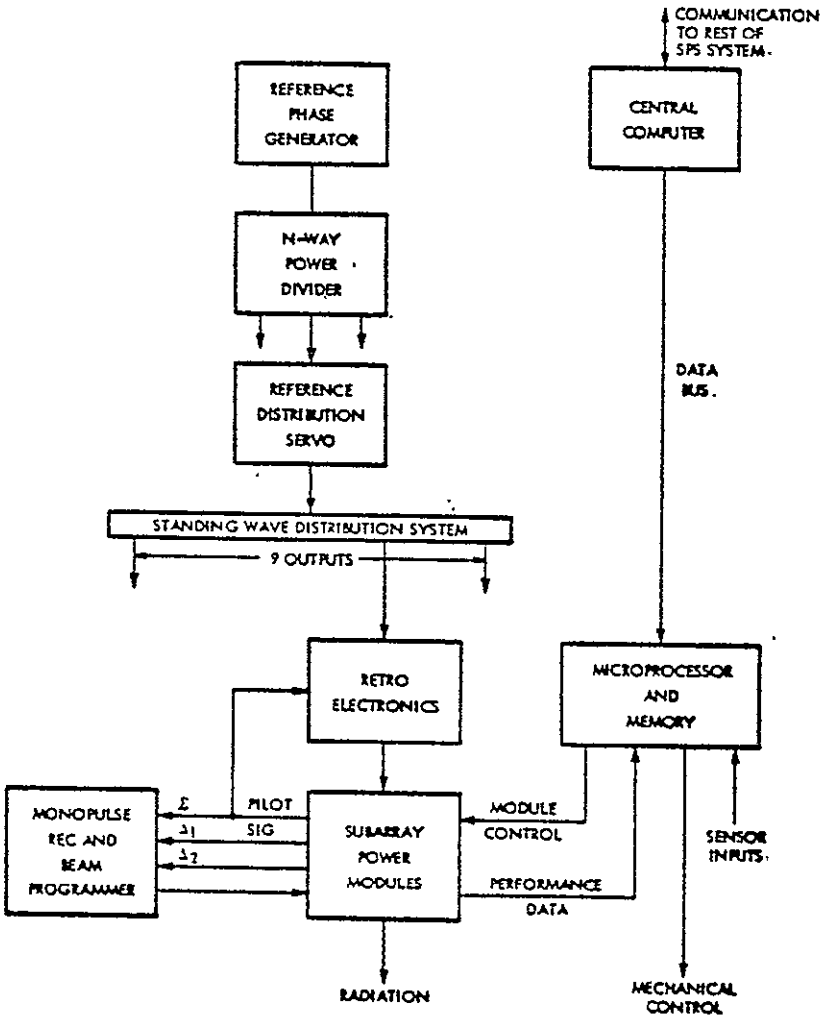


*Figure 3.1-8. Functional Block Diagram*

*Table 3.1-5. Microwave Antenna - Operating Modes*

| Mode | Assembly | Function |
|---|---|---|
| Construction | N/A | N/A |
| Inter-Orbit Transp. | N/A | N/A |
| Operations | Subsystem | Steady-state transmission |
| Eclipse | Subsystem | Shutdown/startup |
| Transition | N/A | N/A |
| Failure/Maintenance | Subsystem | Redundant operation<br>Auto shutdown<br>Manual startup |
| Checkout | Subsystem | Performance<br>Phasing tests<br>Rectenna tests<br>Environmental checks |

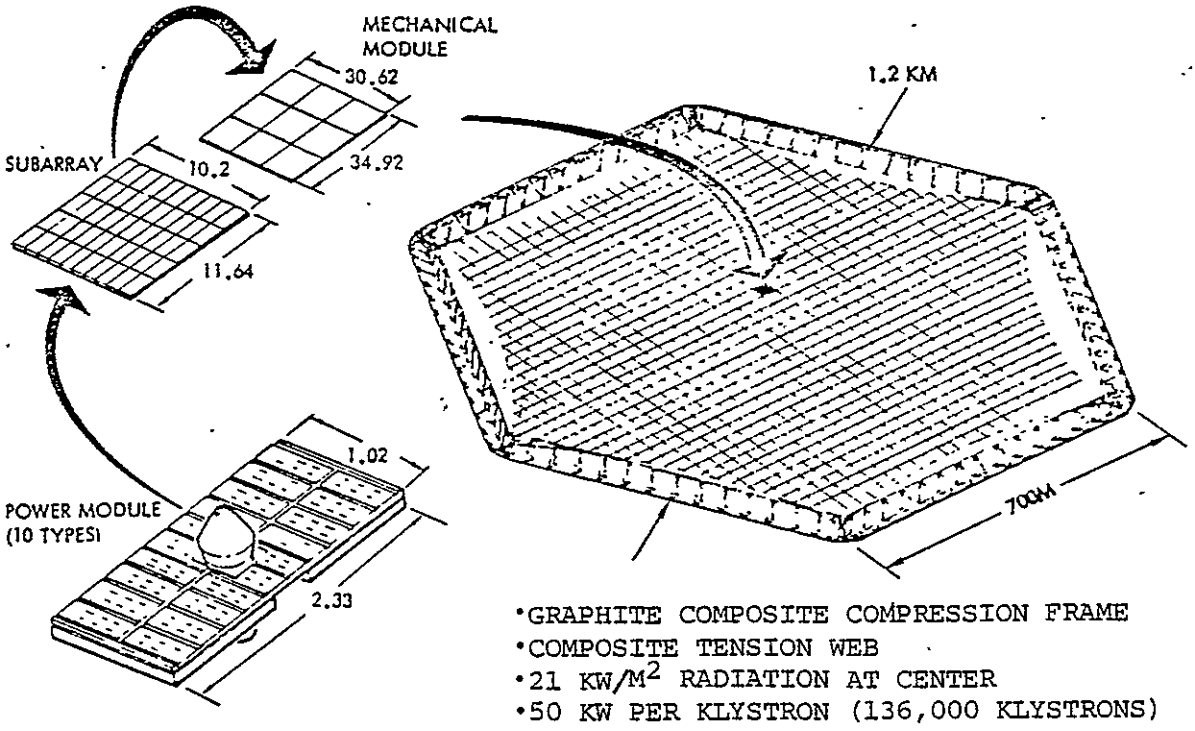


*Figure 3.1-9. Satellite Antenna Array Assembly*

Major Assemblies

Figure 3.1-10 illustrates the major assemblies comprising the MPTS. Figure 3.1-11 shows a high-density module at the array center.

The selected power converters are nominally 50-kW klystrons, mounted in the center of the resonant cavity radiators (RCR). The klystron collector radiates both downward in the direction of the microwave rectenna as well as

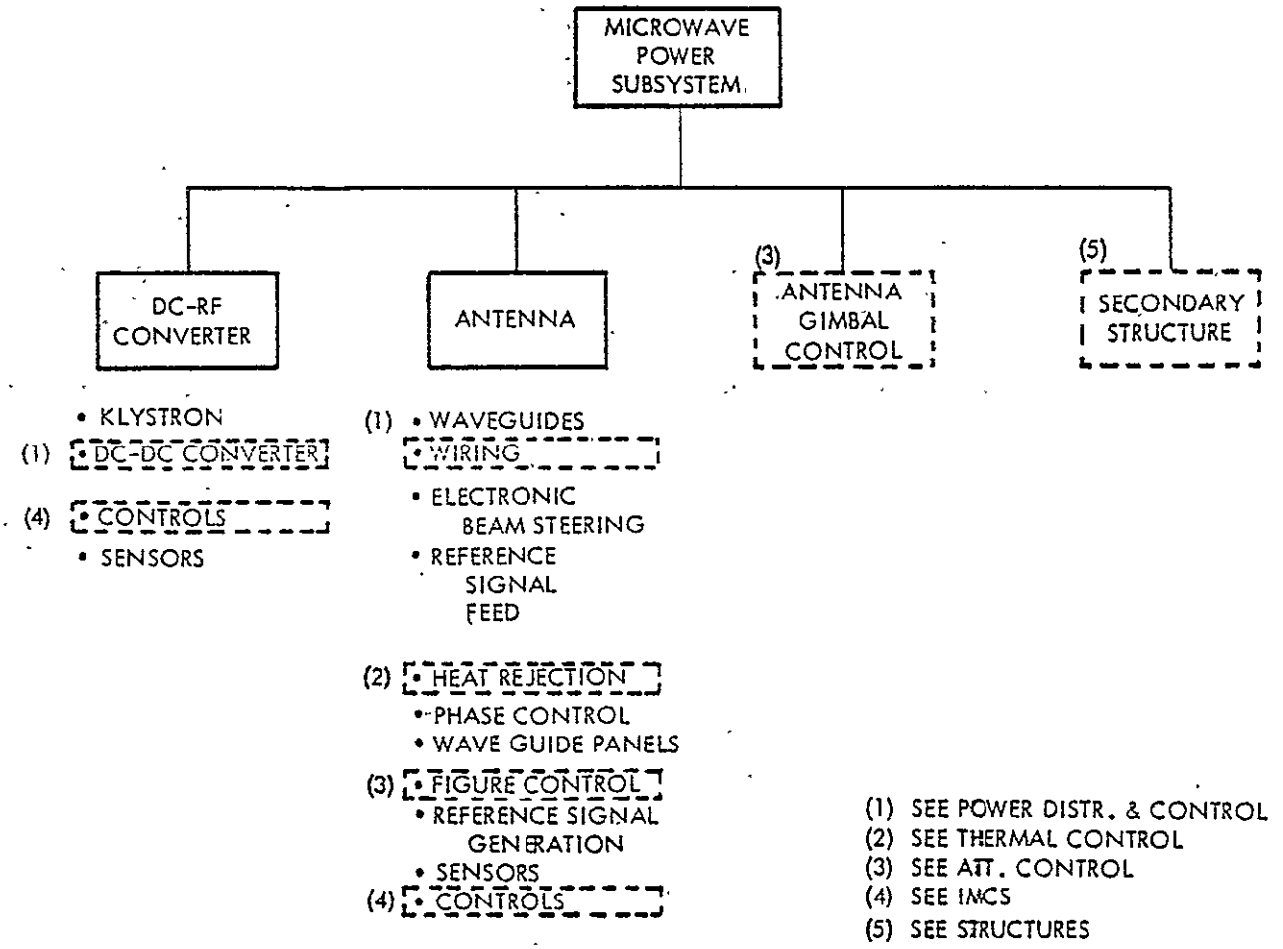


*Figure 3.1-10. Assembly Tree - Microwave Power Subsystem*

| TYPE PWR DENSITY | 1. | 21.05 KW/M2 |
|---|---|---|
| • NO. OF KLYSTRONS/ SUBARRAY ARRANGEMENT | 50 | 10 x 5 |
| • PWR MOD SIZE | 1.02 x 2.33 | |
| • HINGED CONFIG | 10.2M x 2.33 | |
| • SHIPPING SIZE & WT. | 2.35 x 1.02 x 2.33 | 16.8 KG |

*Figure 3.1-11. Klystron Subarray Assembly*

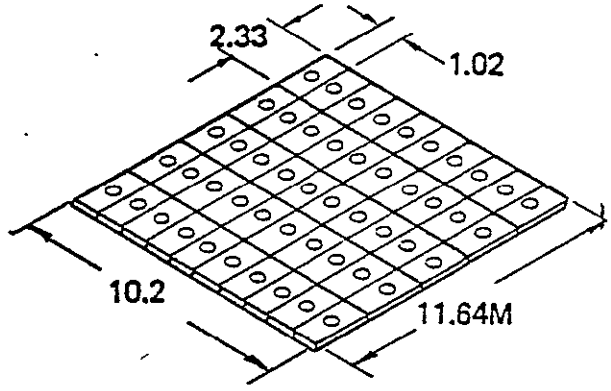

to the rear of the radiator, as shown in Figure 3.1-12. Heat pipes remove heat from the klystron body and transfer it to the RCR face. The pipes lie between the radiating slots of the RCR.

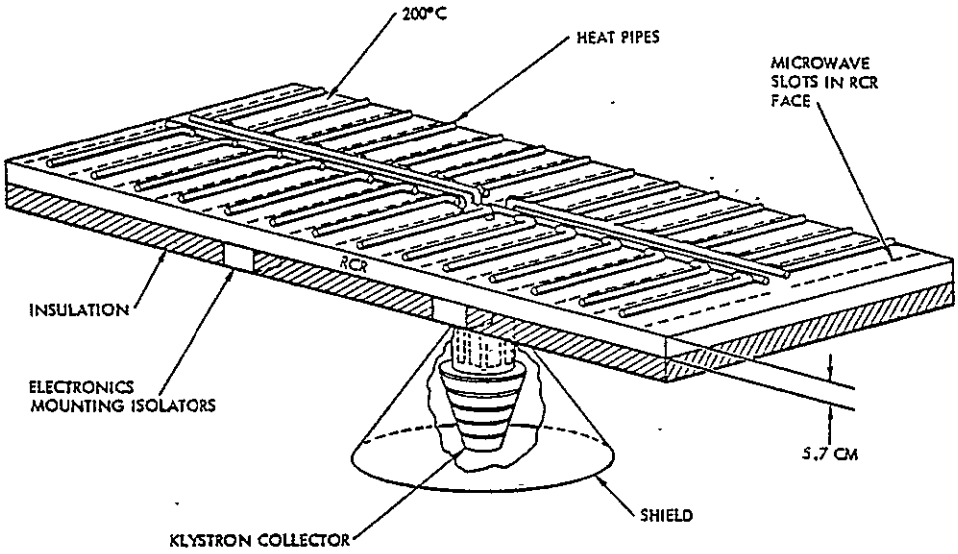


*Figure 3.1-12. Heat Radiators on Array Face*

The transmitted signal is formed from the pilot beam by means of the retroelectronics shown previously in Figure 2.1-9; there is one of these circuits per subarray. Figure 3.1-13 shows a servo system for transferring the required reference phase from a central point to a mechanical module, where it is distributed to the nine subarrays.

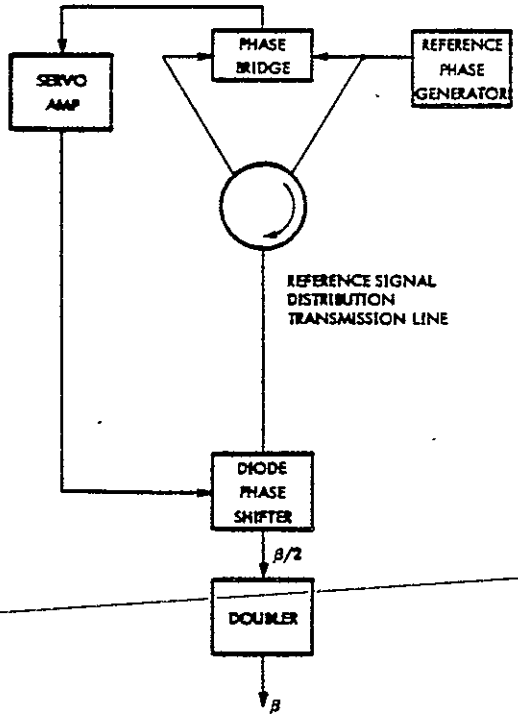


*Figure 3.1-13. Reference Phase Distribution System*

Figure 3.1-14 illustrates the power supply system required for each 50-kW klystron. Note that the "mod anode" is a low-current electrode. It would be supplied by a separate circuit capable of varying its potential to control klystron power.

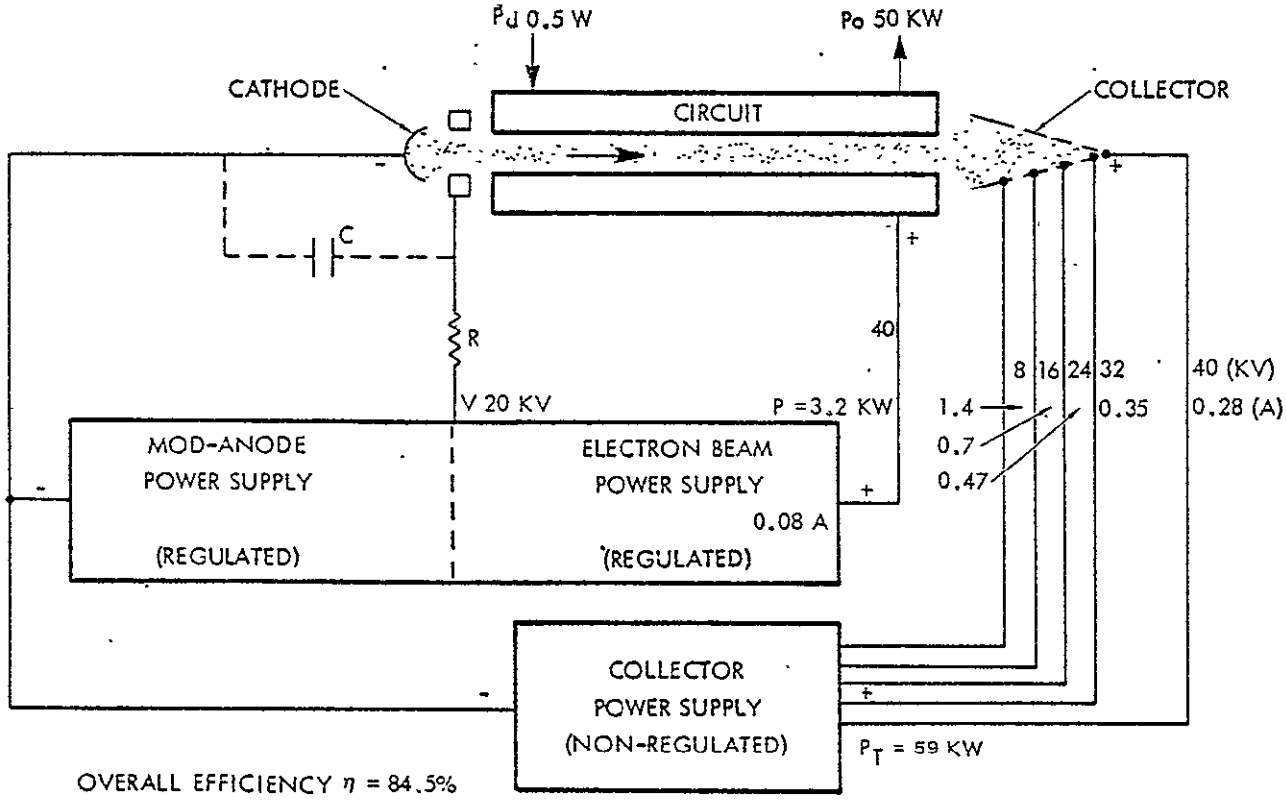


*Figure 3.1-14. Klystron Power Requirements (Preliminary)*

Figure 3.1-15 is a layout and perspective view of the microwave integrated circuit (MIC) assembly which forms the transistor amplifier used for the alternate power conversion method. Figure 3.1-16 shows a possible circuit schematic of a solid state amplifier which consists of a puch-pull emitter follower driving a common base puch-pull final amplifier. All four transistors are formed on a single chip as shown in Figure 3.1-17.

## Design and Performance Characteristics

The functional requirements for the MPTS system are shown in Table 3.1-6 through 3.1-11. Table 3.1-6 summarizes the system functional requirements; Table 3.1-7 shows the prime power requirements for the array; Table 3.1-8 shows a phase error budget for the retroelectronics; Table 3.1-9 shows the array characteristics; Table 3.1-10 shows the characteristics of the klystron power module; and Table 3.1-11 shows the characteristics of the alternate transistor power module.

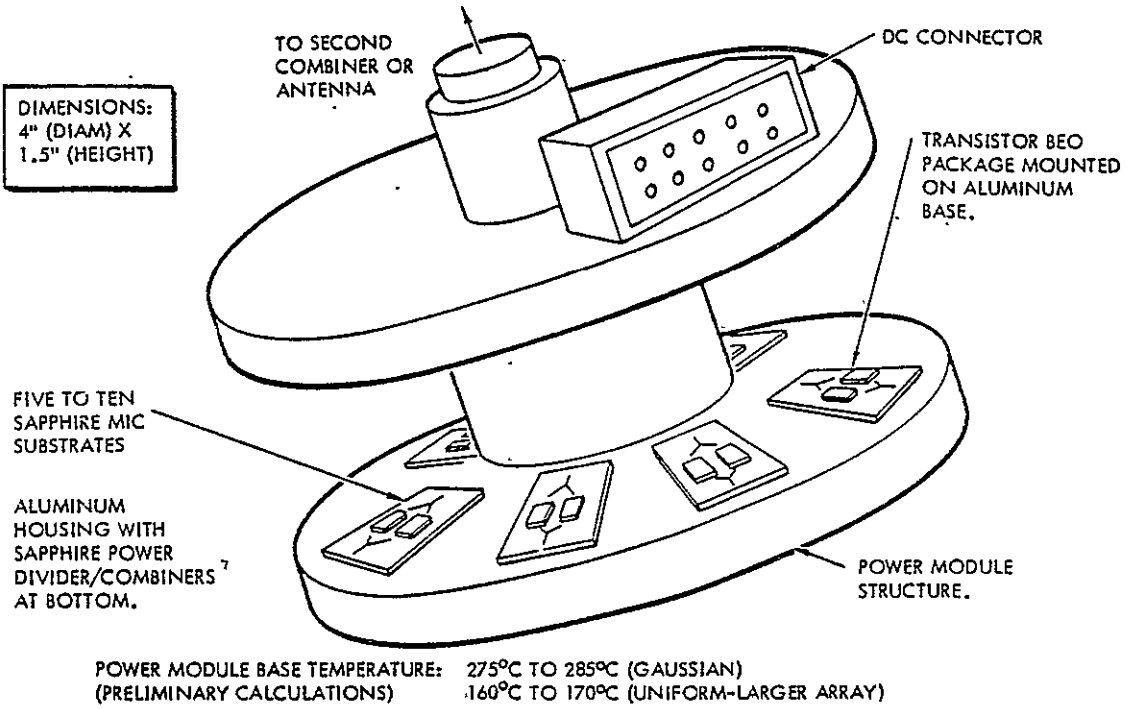


*Figure 3.1-15. Transistor MIC Amplifier*

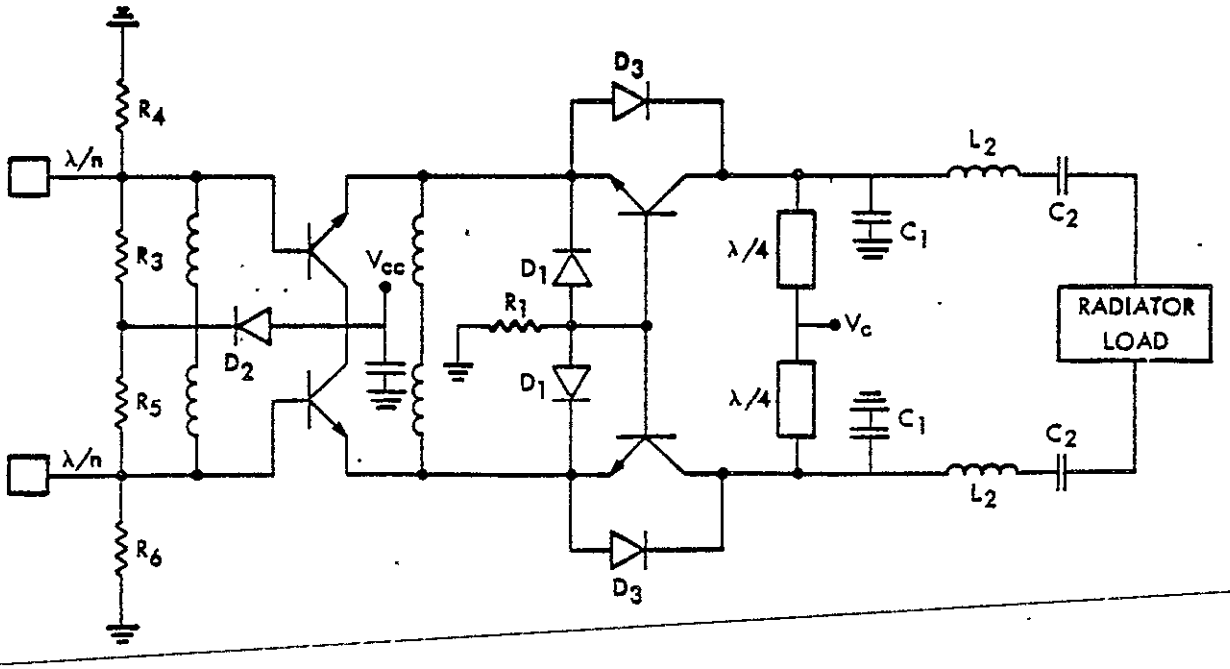


*Figure 3.1-16. Transistor Power Circuitry*

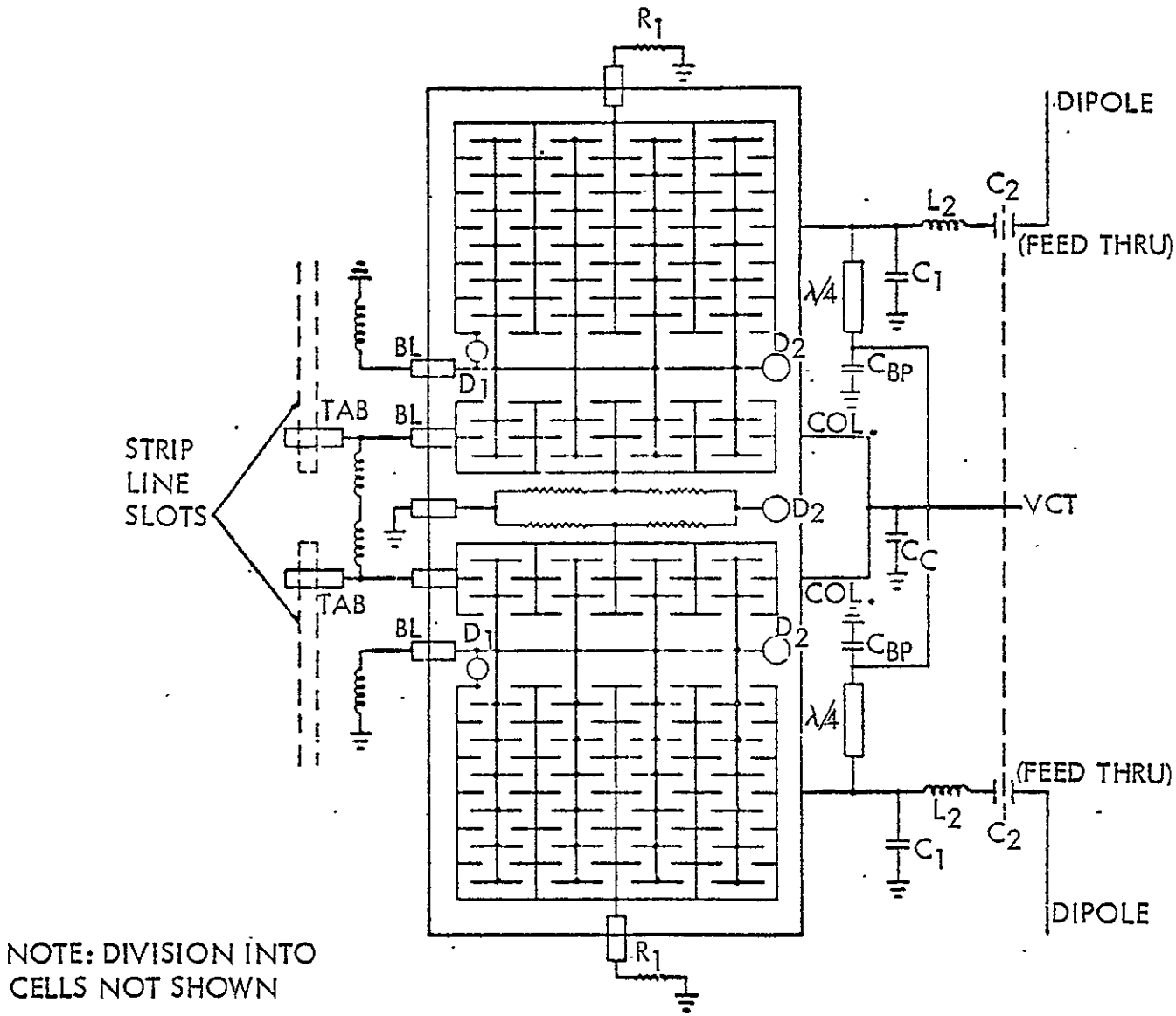


*Figure 3.1-17. Transistor Chip Layout*

*Table 3.1-6. Functional Requirements*

| | |
|---|---|
| Power conversion efficiency (dc-RF) | 0.85 |
| Array radiation efficiency | 0.96 |
| Array beam efficiency | 0.85 |
| Atmosphere transmission efficiency | 0.98 |
| Rectenna conversion efficiency | 0.88 |
| Rectenna aperture efficiency | 0.98 |
| Total MTS efficiency | 0.593 |
| Harmonic level required, dB | TBD |
| AM noise decrease required, dB/kHz | TBD |
| PM noise decrease required, dB/kHz | TBD |
| Maximum power density, $kW/m^2$ | 21 |
| Temperature at back of array | 60° |
| Array mass | TBD |

*Table 3.1-7. Design and Performance Characteristics*

| Device | Freq. | Voltage (kV) | Current A | Power (kW) | Regulation (%) |
|---|---|---|---|---|---|
| Collector 1 | | 40 | 0.28 | 11.2 | None |
| Collector 2 | | 32 | 0.35 | 11.2 | None |
| Collector 3 | | 24 | 0.47 | 11.2 | None |
| Collector 4 | | 16 | 0.70 | 11.2 | None |
| Collector 5 | | 8 | 1.40 | 11.2 | None |
| Klystron body | | 40.0 | 0.08 | 3.2 | 10 |
| Mod anode | | 20.0 | | | 10 |
| Cath. heater | | 20 V | | 0.1 | 10 |
| Solenoid | (1) | 20 | | 0.5 | 1 |
| Computer | (1) | 20 | | 0.1 | 1 |
| Retroelect. | (1) | 20 V | | 0.1 | 1 |
| | | | Total | 59.2 | 84.5 |

(1) Not included in determining klystron efficiency.

*Table 3.1-8. Phase Error Budget*

| | |
|---|---|
| 500:1 power divider | 6° |
| Ref. Ø dist. link | 6° |
| Zone feeder | 6° |
| Retroelectronics | 6° |
| Klystron Ø shifter loop | 3° |
| Subarray pointing loop | 3° |
| Total RMS phase error = 13° | |

*Table 3.1-9. Array Characteristics*

| | |
|---|---|
| Operating frequency | 2.45 GHz |
| Operating wavelength | 12.2 cm |
| Mechanical module size | 34.92×30.62 m |
| Subarray size | 11.64×10.2 m |
| Subarray beamwidth | 0.73° |
| Subarray RMS phase error | 5°-10° |
| Amplitude weighting | 10 dB Gaussian taper |
| Amplitude quantitization | 10, 1-dB steps |
| Subarray weighting | Uniform |
| Electronic steering limit, 1/8 subarray beamwidth = | 0.1° (RMS) |
| Mech. subarray pointing accuracy | 0.07° (RMS) |
| Mech. module pointing accuracy | 0.07° |
| Total RMS subarray electronic pointing accuracy | 0.1° |
| Polarization | Linear |
| Beam efficiency | 0.85 |
| Radiation efficiency (0.2 dB feed + 0.2 dB RCR Ω loss) | 0.96 |
| First sidelobe level | -25 dB |
| Electronic subarray steering accuracy, 1/30 (0.73°) = | .024° |
| (Pointing Loss = -.005 dB) | |

*Table 3.1-10. Klystron Power Module*

| | | | |
|---|---|---|---|
| Output power, kW | 50 | Overall efficiency, % | 85 |
| Input power, W | 0.5 | Collector power dissipated, kW | 5.0 |
| Gain, dB | 50 | Body power dissipated, kW | 3.3 |
| Basic tube efficiency, % | 85.8 | Second harmonic level, dB | -40 |
| Prime power, kW | 58.3 | AM noise, dB/kHz | -140 |
| Auxiliary power, kW | 0.70 | PM noise, dB/kHz | -130 |
| Total power, kW | 59 | | |

*Table 3.1-11. Transistor*

| | |
|---|---|
| Amp output power, W | 120 |
| Gain, dB (two stages) | 20 |
| Input power, W | 1.2 |
| Collector efficiency | .83 |
| Overall efficiency | .78 |
| Second harmonic level, dB | -40 |
| AM noise, dB/kHz | >-140 |
| PM noise, dB/kHz | >-130 |
| Number of amplifiers | 100 |
| Power module output, kW | 12 |

Subsystem Definition and Interfaces

Subsystem interfaces are shown in Figure 2.1-9. The concept/subsystem illustrated will be identical regardless of which satellite concept is selected for further consideration.

### 3.1.3 POWER DISTRIBUTION AND CONTROL

The power distribution and control subsystem (PDS) receives power from the power generation subsystem, and provides the regulation and switching required to deliver regulated power from distribution to the antenna system (Klystrons) and the various subsystems (Attitude Control, IMCS, etc.). During the ecliptic periods, batteries will be utilized to supply the minimum required power to the various subsystems. The feeders, and power cabling of all SPS subsystems, are included in the PDS. The grounding, electromagnetic interference control, and shielding requirements of the SPS are also included as part of the PDS. The life expectancy of the PDS is 30 years with the exception of the energy storage (batteries), which has a life expectancy of 10 years. Resupply of the PDS will be as needed.

Functional Requirements and Block Diagrams

Functional requirements for various operating modes are listed in Table 3.1-12. A simplified block diagram for the photovoltaic concept is presented in Figure 3.1-18.

*Table 3.1-12. Power Distribution and Control Subsystem - Operating Modes*

| Mode | Assembly | Function |
|---|---|---|
| Construction | N/A | N/A |
| Inter-orbit transportation | Subsystem | Power for elec. prop. system (configured for low voltage) |
| Operation | Subsystem | Steady-state operation |
| Eclipse | Subsystem | Shutdown/startup and minimum energy supplied to subsystems |
| Transition (from construction transport.) | Subsystem | Startup/shutdown thruster power |
| Failure maintenance | Subsystem | Redundant operation, auto shutdown |
| Checkout | Subsystem | Continuity, insulation resistance |

Major Assemblies

Figure 3.1-19 illustrates the major assemblies comprising the power distribution and control subsystem (PDS).

Power Distribution. The power distribution subsystem consists of the main feeders, secondary feeders, summing buses, tie bars, and power interface cabling for the various subsystems. The main feeders are generally sized to minimize the combined mass of itself and the solar array mass, considering power requirements, efficiency, and the variation in resistivity with operating temperature. The power distribution system utilizes flat aluminum (6001-T6) feeders where feasible, and round conductors for those subsystems where flat conductors are not feasible. The flat conductors are not considered part of the main structure; they will normally be passively cooled by radiation to free space.

Regulation. The solar array output will be regulated so as to prevent line surges when switching the solar array power on to the main feeders. The regulation function is accomplished by selective control of intra-blanket switching managed by the information management and control subsystem (IMCS).

Power Converters and Conditioners. The power converter and conditioners convert the existing bus voltages to the subsystem voltage required for the various subsystem loads. The output tolerances will be based on the using subsystem interface requirements. The power converters are utilized in the GEO mode of operation.

Switchgears. Switchgears are used for:

- Isolation of solar array blankets due to systematic element failure
- Isolation of solar array blankets when performing maintenance work
- Prevention of large line transients upon startup and shutdown and during ecliptic periods

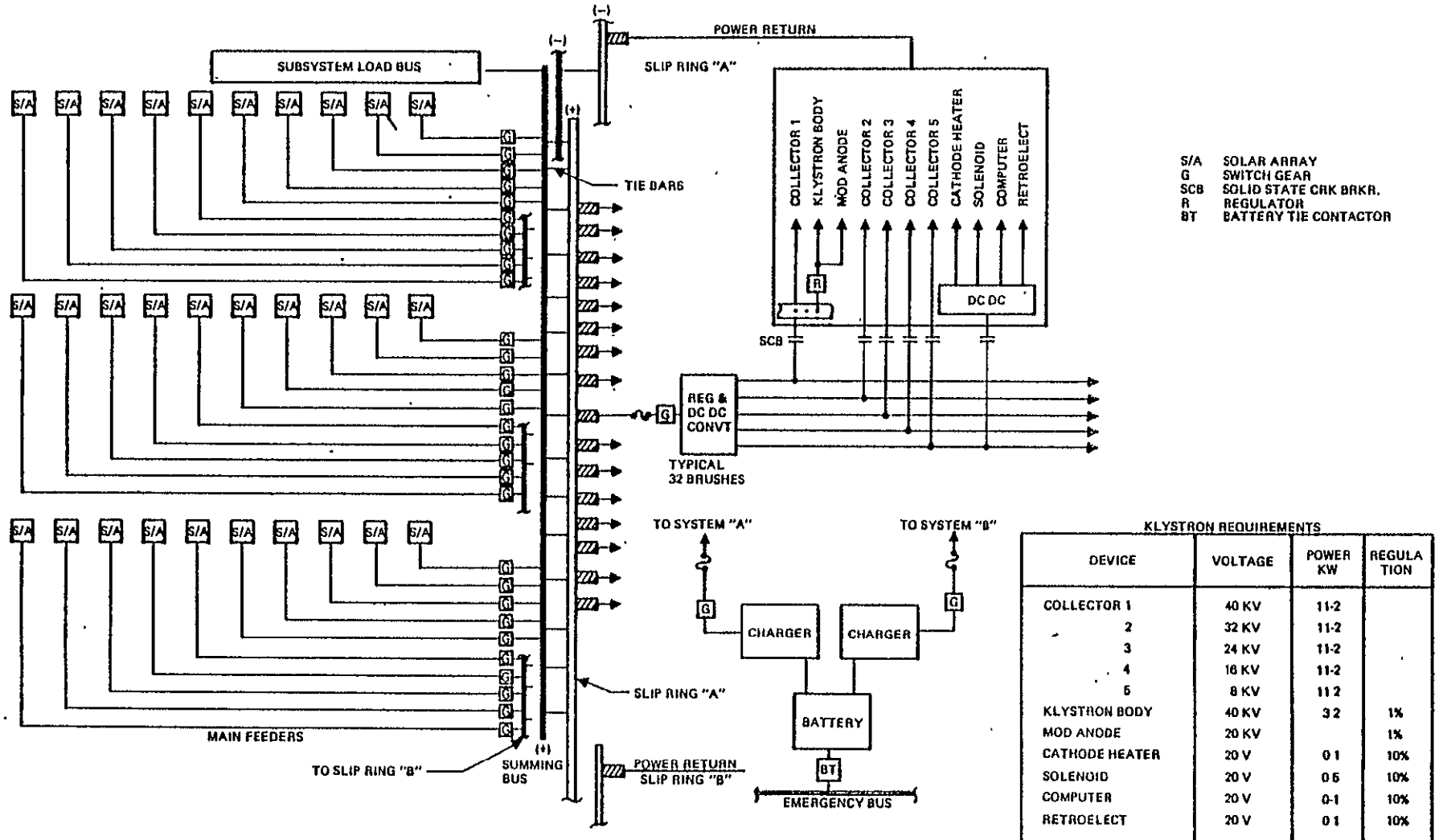


KLYSTRON REQUIREMENTS

| DEVICE | VOLTAGE | POWER KW | REGULATION |
|---|---|---|---|
| COLLECTOR 1 | 40 KV | 11-2 | |
| 2 | 32 KV | 11-2 | |
| 3 | 24 KV | 11-2 | |
| 4 | 16 KV | 11-2 | |
| 5 | 8 KV | 11 2 | |
| KLYSTRON BODY | 40 KV | 3 2 | 1% |
| MOD ANODE | 20 KV | | 1% |
| CATHODE HEATER | 20 V | 0 1 | 10% |
| SOLENOID | 20 V | 0 5 | 10% |
| COMPUTER | 20 V | 0-1 | 10% |
| RETROELECT | 20 V | 0 1 | 10% |
| TOTAL | | 59.8 | |

*Figure 3.1-18. Power Distribution - Simplified Block Diagram*



Satellite Systems Division
Space Systems Group
Rockwell International

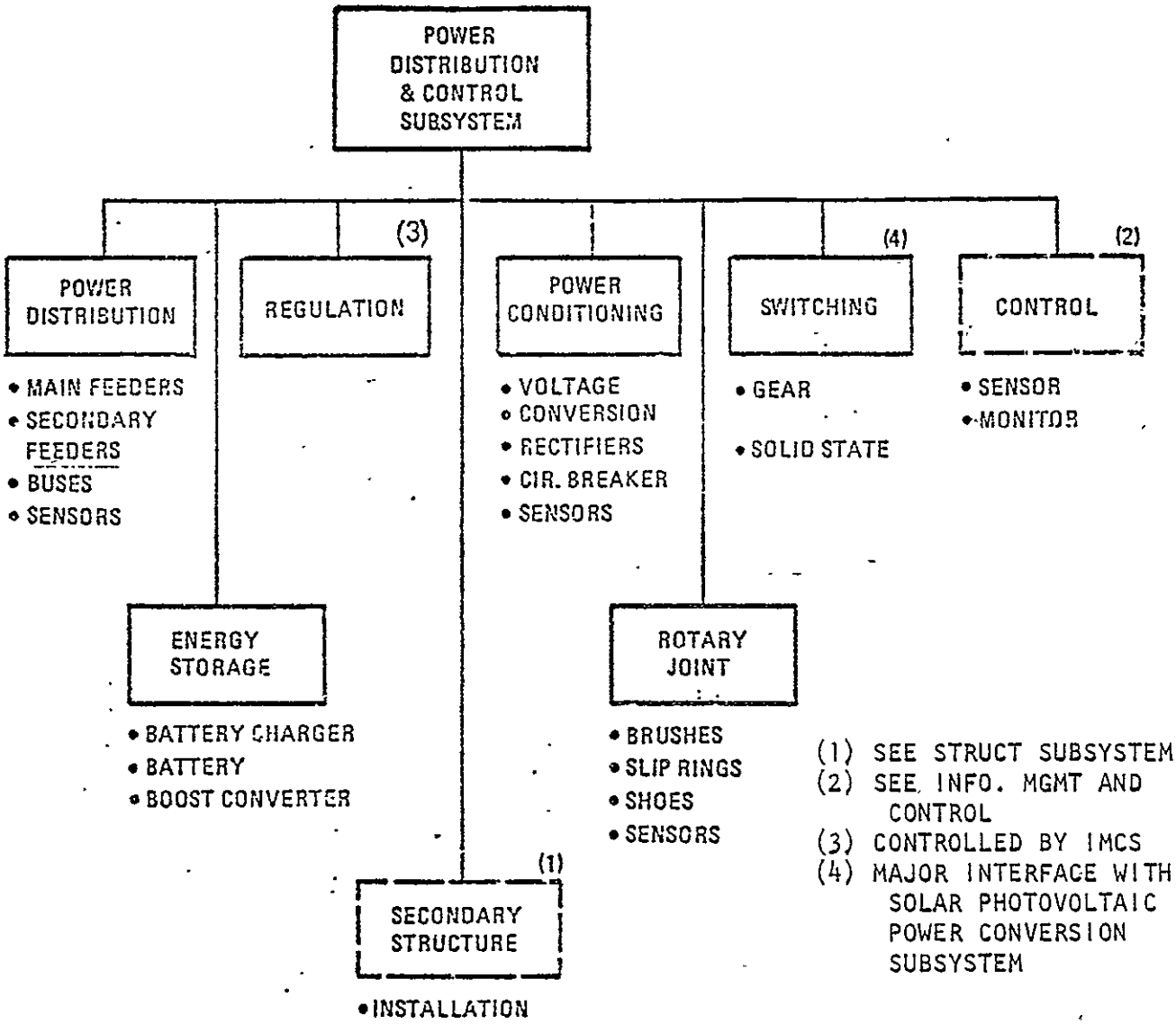


*Figure 3.1-19. Assembly Tree - Power Distribution and Control Subsystem*

The switchgears will be solid-state to reduce the overall mass of switches. The voltages and currents being handled by these switches will be monitored by the IMCS to determine their status and to establish a need for the opening and closing of these switches. The switches are generally held in the closed state during the steady-state mode of operation. During the startup and shutdown operations, the switches will be monitored by the IMCS and when certain voltage levels are reached a command signal will open or close switches as required.

Energy Storage. Batteries will be utilized during ecliptic periods to provide the minimum energy required by the various subsystems. The batteries will be a sodium chloride type, having a density of at least 200 Wh/kg.

Rotary Joint. The rotary joint is utilized to transfer energy through slip rings and brushes from the SPS fixed member to the SPS rotating member upon which the microwave antenna is located. The power transferred includes both that required to operate antenna-mounted equipment, as well as that to be transmitted to the ground.

Control. The PDS control concept is a simple, continuous monitoring system performed by the on-board IMCS computer system. The IMCS monitors the bus as well as the converter voltages, currents and temperatures, and compares these with preset levels stored in the computer(s). In the event of a voltage/current level disagreement with the preset conditions, the IMCS will initiate a command signal to regulate the faulted area by opening up or closing the associated switchgear(s).

Secondary Structures. Secondary structures consist of mounting brackets, clamps, and installation structures as needed. It is assumed that a delta of 10 percent of the PDS mass would be sufficient for such purposes.

## Design and Performance Characteristics

The design and performance characteristics for the power distribution subsystem are listed in Table 3.1-13.

*Table 3.1-13. Design and Performance Characteristics*

| Major Assembly | Requirements | Technology Issue |
|---|---|---|
| GENERAL | | |
| Mass | Configuration dependent | |
| MTBF | Subsystem dependent | |
| Life | 30 years | |
| Efficiency | 88-98% (config. dependent) | |
| Resupply and maintenance | As needed | |
| POWER DISTRIBUTION (PD) | Mostly flat conductor | Further study is required to determine feasibility of superconductivity for reduction of mass. |
| Mass | Configuration dependent | |
| Material | Aluminum 6001-T6 | |
| Insulation | 1-mm Kapton | |
| Efficiency | 88-98% (config. dependent) | |
| Subsystem cabling | Location and power dependent | |
| Resupply and maintenance | As required | |
| Life | 30 years or greater | |
| POWER CONVERTER AND CONDITIONING | | |
| Density | 0.197 kg/kW | Further analysis is required to specify design requirements and type. |
| Voltage | Subsystem dependent | |
| Current | Subsystem dependent | |
| Efficiency | 96-98% | |
| Life | 30 years | |
| Resupply and maintenance | As required | |
| SWITCH GEAR | | |
| Density | Approx. 0.00086 kg/kW | Study is required to specify design requirements. |
| Type | Penning discharge tube | |
| Power rating | Configuration dependent | |
| Voltage | Config. and location dependent | |
| Efficiency | 99-99.9% | |
| Life | 30 years | |
| Resupply and maintenance | As required | |
| ENERGY STORAGE (BATTERY) | | |
| Density | Approx. 200 Wh/kg | Further study to define charge/discharge cycle, size, volume, and installation is required. |
| Type | Sodium chloride | |
| Temperature | 200°C | |
| Efficiency | 80-95% (turnaround) | |
| Life | 10-20 years | |
| Resupply and maintenance | As required | |

*Table 3.1-13. Design and Performance Characteristics (Cont.)*

| Major Assembly | Requirements | Technology Issue |
|---|---|---|
| SECONDARY STRUCTURE<br>Mass | 10% of PDS weight was considered to be required for mounting and installation. | |
| CONTROL<br>Temperature sensors<br>Current sensors<br>Voltage sensors<br>Switch gear control<br>Overcurrent<br>Overvoltage<br>Undercurrent<br>Undervoltage | <br>No. of sensors config. dependent<br>No. of sensors config. dependent<br>No. of sensors config. dependent<br>Configuration dependent | |
| ROTARY JOINT<br>Slip rings required for SPS<br>Operating voltage<br>Amps per ring assembly<br>Total weight of four-ring and brush assemblies<br>Life<br>Resupply and maintenance | <br>2 positive and 2 negative<br>40,000 V dc (nominal)<br>104,000<br>54,200 kg<br>30 years<br>As required | |
| SLIP RING<br>Core of slip ring<br>Cladding on slip ring<br>Core size, cross-section<br>Diameter<br>Length<br>Weight<br>Total weight of all slip rings (4) | <br>Aluminum<br>Coin silver<br>33.7 $cm^2$<br>0.3 km<br>0.94 km<br>10,715 kg<br>42,870 kg | |
| PICKUP SHOE-BRUSH<br>Number required/each slip ring<br>Material<br>Shoe size<br>Dimension/shoe<br>Contact surface area/shoe<br>Weight/shoe<br>Shoe travel velocity<br>Wear rate per year<br>Current density<br>Operating temperature<br>Contact pressure<br>Total weight, all 64 shoes | <br>16<br>75% $MoS_2$, 25% $M_3$+ $T_a$<br>19.0 cm x 12.7 cm x 2.7 m<br>863 $cm^2$<br>177 kg<br>0.653 m/min<br>0.004 cm<br>7.75 amp/$cm^2$<br>90°C<br>0.705 kg/$cm^2$<br>11,341 kg | |

Subsystem Definition and Interfaces

Subsystem interfaces are shown in Figure 2.1-2 for the photovoltaic concept. The power required from the photovoltaic power source is 9.55 GW.

### 3.1.4 STRUCTURES SUBSYSTEM

The primary SPS structure assemblies are made up, basically, of tribeam girders, tension cables, and joints. The fabrication and assembly of these structures are accomplished on orbit by beam machines and supporting auxiliary equipment. These structural elements must individually withstand the forces, torques, and dynamics imposed by the construction process. Once built up to an assembly level (e.g., solar array wing, rotary joint, etc.), the structure

must have sufficient strength and stiffness to withstand forces, torques, and dynamics generated by the environment (gravity-gradient torques), the attitude control system (forces and frequencies) and the operational equipment (rotary joint torques, microwave induced thermal environment, etc.). The level of strength and stiffness are dictated by other subsystem requirements such as pointing accuracies and ACS bandwidth frequencies.

The secondary structure consists of the passive interface attachment between the primary structure and the operational subsystems. The structural mechanisms consist of active structural subassemblies that articulate, rotate, or otherwise cause or allow motion between the primary structure and other subsystem elements or between subsystem elements themselves.

Functional Requirements and Block Diagrams

Functional requirements for various operating modes are listed in Table 3.1-14. Since the structure is primarily a passive system (the exception is the figure monitoring system), no block diagrams exist. A simplified interface diagram is presented in Section 2.1.2.

*Table 3.1-14. Structural Subsystem - Operating Mode*

| MODE | ASSEMBLY | FUNCTIONS |
|---|---|---|
| CONSTRUCTION | SYSTEM | MAINTAIN STRUCTURAL INTEGRITY OF STRUCTURAL SUBELEMENTS PRIOR TO OVERALL SYSTEM STABILIZATION. |
| PRE-INTER-ORBIT TRANSFER REORIENTATION | SYSTEM | WITHSTAND GRAVITY-GRADIENT/ACS TORQUE INTERACTION. DEVELOP MINIMUM FIRST BENDING MODE FREQUENCY DICTATED BY ACS. |
| INTER-ORBIT TRANSFER | SYSTEM | WITHSTAND G-LOADS ASSOCIATED WITH PROPULSION SYSTEM THRUST LEVEL WHILE MAINTAINING ADEQUATE RIGIDITY WITHIN POINTING TOLERANCES REQUIRED FOR POWER CONVERSION. |
| ECLIPSE | | WITHSTAND THERMAL STRESS AND DISTORTIONS DUE TO EXTREME TEMPERATURE CHANGES. |
| OPERATION | ANTENNA STRUCTURE<br>SOLAR ARRAY | POINT WITHIN $\pm 0.08°$ OF TARGET<br>MAINTAIN WIDTH DISTORTION $\leq \pm 0.3°$ |
| FAILURE/MAINTENANCE | SYSTEM | PROVIDE FOR SUBELEMENT SECONDARY LOAD PATHS. WITHSTAND FORCES & TORQUES INTRODUCED BY MAINTENANCE OPERATIONS. |

Major Assemblies

Figure 3.1-20 depicts the major structural subsystem assemblies and tabulates the elements that make up each of these major assemblies. An example of this element breakdown in shown in Figure 3.1-21.

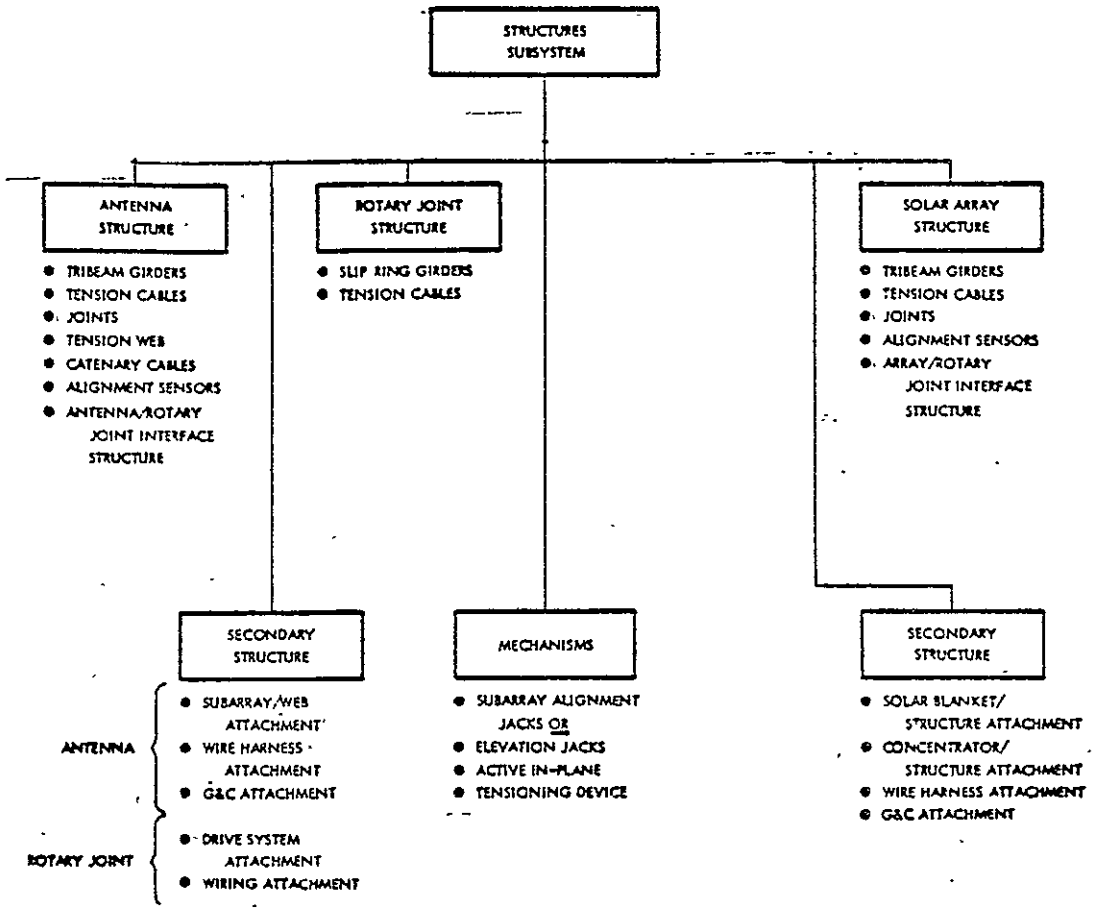


*Figure 3.1-20. Assembly Tree - Structures Subsystem*

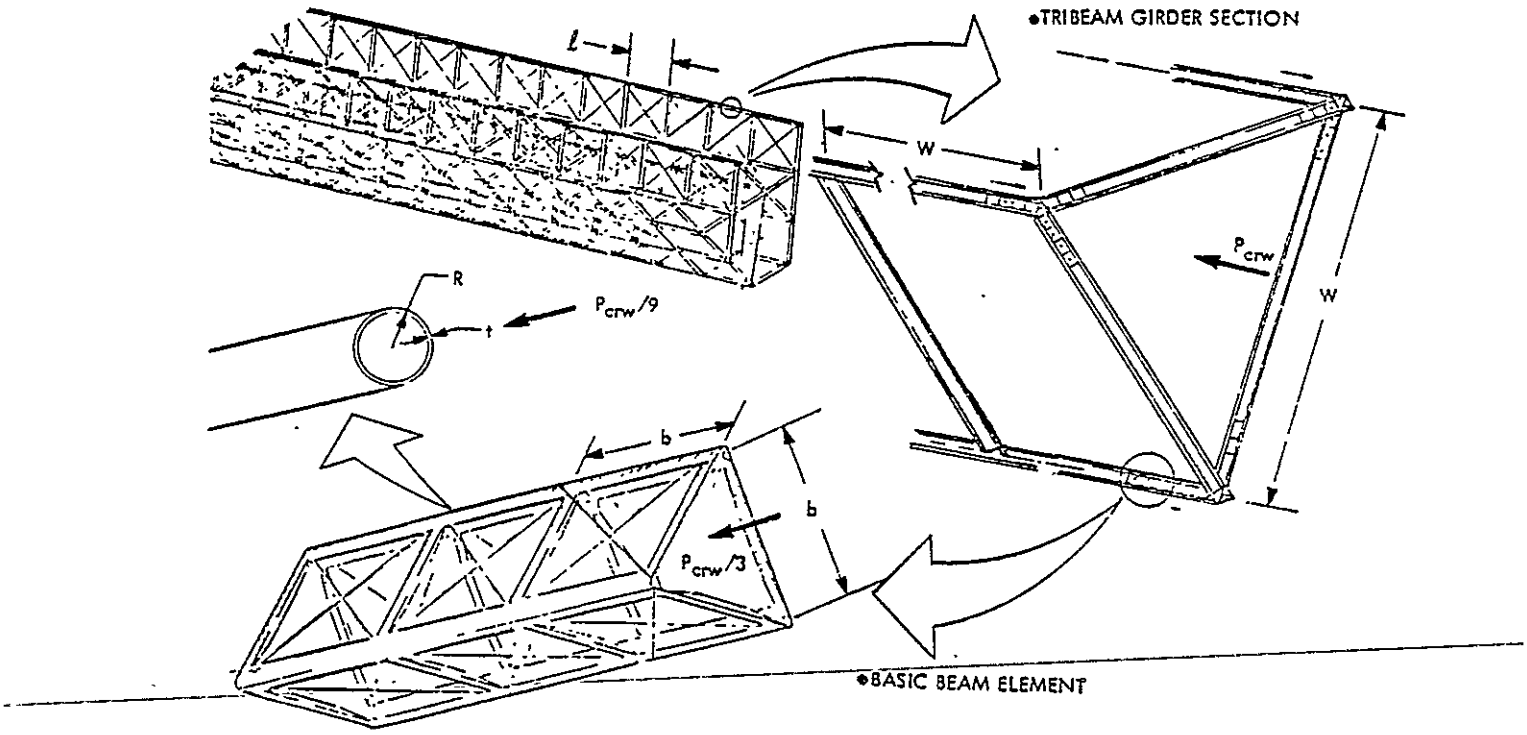


*Figure 3.1-21. Structure Breakdown*

Design and Performance Characteristics

The design and performance characteristics for the structures subsystem are listed in Table 3.1-15.

Subsystem Definition and Interfaces

Subsystem interfaces are shown in Figure 2.1-7. The only active interface identified to date is the laser transit network, established to determine the satellite figure for the CR-2 photovoltaic satellite. It is expected that this network would be applicable to any photovoltaic concept.

## 3.1.5 ATTITUDE CONTROL AND STATIONKEEPING SUBSYSTEM

The attitude control and stationkeeping subsystem (ACSS) is an integrated system designed to satisfy the control and stationkeeping requirements for each of the SPS operational modes. The functional performance requirements of the ACSS are to provide: vehicle attitude stabilization, solar collector pointing and figure control (currently passive for the photovoltaic satellite), and microwave (MW) antenna pointing and figure control, and stationkeeping in geosynchronous orbit.

Functional Requirements and Block Diagram

Functional requirements for various operating modes are listed in Table 3.1-16. The functional flow diagram in Figure 3.1-22 illustrates the major ACSS component subsystems and information flow between the components to satisfy the control and stationkeeping requirements. The ACSS is integrated with the IMCS which provides the interconnections for all the ACSS elements and the computational capacity for the control algorithms. The basic information for the implementation of the control laws is provided by the sensors. The control forces and torques are furnished by the ion bombardment thrusters of the reaction control system (RCS). The MW antenna pointing is achieved with the rotary joint and antenna gimbal torques.

Satellite Attitude Control Requirements. The attitude control system shall maintain vehicle stabilization and orientation accuracy in all three axes. The detailed performance requirements are given in Table 3.1-17. The coordinate systems used in the photovoltaic concept is shown in Figure 3.1-23. Attitude control RCS requirements as listed in Table 3.1-18.

Microwave Antenna Pointing Requirements. The MW beam steering is accomplished by a combination of mechanical antenna pointing and electronic beam steering. The mechanical gimbal pointing accuracy requirements must be > 1 arc-min. The antenna must be stabilized to < 1 arc-min/sec. The antenna figure control shall be capable of pointing each of the 34.9×30.6-m elements to an accuracy better than < 6 arc-min. The electronic steering of the MW beam to provide the vernier pointing accuracy is accomplished in the MPTS.

Stationkeeping. The purpose of the stationkeeping system is to maintain a geostationary equatorial orbit and spacing with respect to the other satellites

*Table 3.1-15. Design and Performance Characteristics*

| FACTOR | ANTENNA STRUCTURE | ROTARY JOINT STRUCTURE | SOLAR ARRAY STRUCTURE |
|---|---|---|---|
| CONSTRUCTION SITE | GEO | GEO | GEO |
| CONSTRUCTION TECHNIQUE | BEAM MACHINE | BEAM MACHINE | BEAM MACHINE |
| MASS (KG) | $0.12\times10^6$ | $0.6\times10^6$ | $0.7\times10^6$ |
| MATERIAL | COMPOSITES | COMPOSITES | COMPOSITES |
| MAX ALLOW OP TEMP (°C) | 110/320 | 108 | 110 |
| OPERATING STRESS LEVEL (μPa) * | $\sigma_{cc} = \sigma_{cn}$ | TBD | $\sigma_{cc} = \sigma_{cn}$ |
| FACTOR OF SAFETY | 1.5 | 1.5 | 2.0 |
| MIN NATURAL FREQ (CYCLES/HOUR) | 2.0 | TBD | 10.0-LEO<br>1.0-GEO |
| ORIENTATION | NADIR | N/A | Y-POP<br>Z-EQUATOR |
| TOLERANCES (OUT OF PLANE)<br>ABOUT Y AXIS<br>ABOUT X AXIS | ±0.8° | TBD | 0.3°<br>1.0° |

*$\sigma_{cc}$ = CRITICAL CRIPPLING STRESS; $\sigma_{cn}$ = CRITICAL BUCKLING STRESS

*Table 3.1-16. Attitude Control and Stationkeeping - Operating Modes*

| MODE | FUNCTIONS |
|---|---|
| CONSTRUCTION | VEHICLE STABILIZATION<br>DOCKING<br>STATIONKEEPING |
| TRANSITION FROM CONSTRUCTION OPNS | REORIENT FROM CONSTRUCTION TO OPERATIONAL ATTITUDE |
| OPERATIONS | ATTITUDE CONTROLLED REFERENCE ORIENTATION<br>ANTENNA POINTING<br>FIGURE CONTROL<br>STATIONKEEPING |
| ECLIPSE | ATTITUDE CONTROLLED TO REFERENCE ORIENTATION<br>ANTENNA POINTING<br>(STATIONKEEPING NOT REQUIRED) |
| FAILURE MAINTENANCE | FAIL-OPERATIONAL REDUNDANCY ON ALL ATTITUDE CONTROL FUNCTIONS<br>MAINTENANCE INTERVAL, ≥ 1 YEAR |
| CHECKOUT | LEAK CHECKS<br>SOLAR POINTING AND FIGURE CONTROL<br>STATIONKEEPING<br>DYNAMIC RESPONSE |

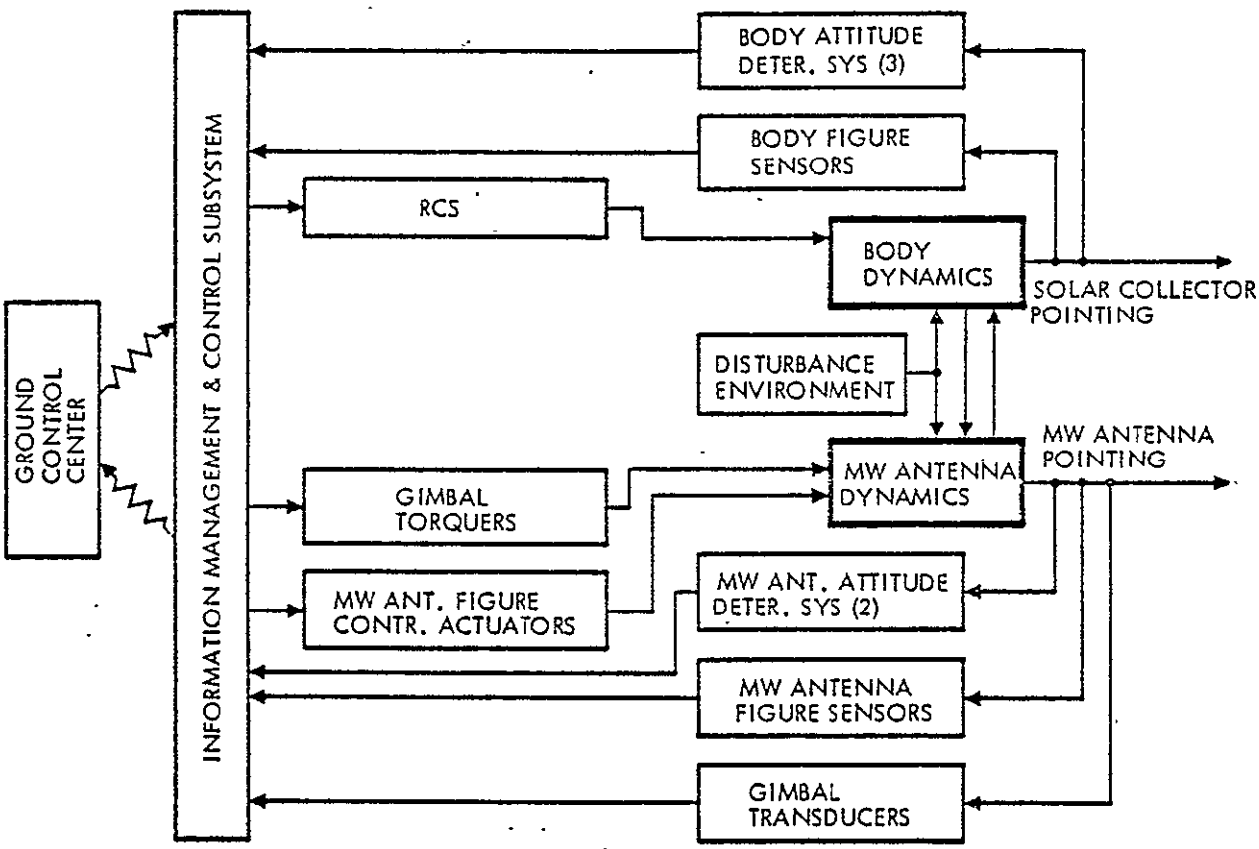


*Figure 3.1-22. Functional Flow Diagram*

*Table 3.1-17. Attitude Control Requirements*

| PARAMETER | PHOTO-VOLTAIC CR = 2 |
|---|---|
| ASSEMBLY ORBIT | GEO |
| ASSY CONTROL (GRAVITY-GRADIENT (STABLE) | Z-POP, Y-LV |
| CONTROL ACCURACY (DEG) | ±0.5 |
| OPERATIONAL ATTITUDE CONTROL | |
| REFERENCE ATTITUDE | Y-POP, X-IOP |
| CONTROL ACCURACY (DEG) | ±0.1 |
| CONTROL SYS BANDWIDTH (CYCLES/HR) | 0.5 |
| SATELLITE FIRST BENDING MODE FREQ (CYCLES/HR) | ≥1.0 |

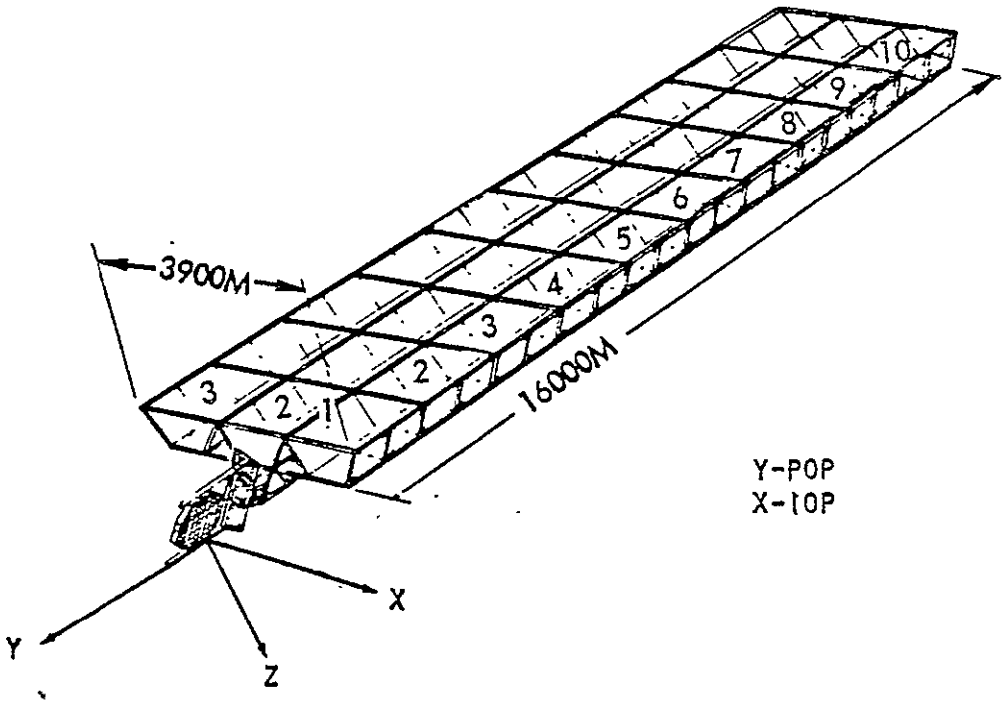


*Figure 3.1-23. Satellite Coordinate System*

*Table 3.1-18. Attitude Control RCS Requirements*

| FUNCTION | PROPELLANT MASS (% S/C MASS OVER 30 YEARS) | NO. OF THRUSTERS* | | |
|---|---|---|---|---|
| | | X | Y | Z |
| •SOLAR PRESSURE<br>•ANTENNA RADIATION PRESSURE | 4.01 | | | 15.2 |
| •GRAVITY GRADIENT | | | | |
| • ABOUT X | 0.124 | | | 1.66 |
| • ABOUT Y | 1.38 | | | 16.4 |
| • ABOUT Z | 0.124 | 1.6 | | |
| | 1.62 | 1.6 | | 18.1 |
| TOTALS | 5.63 | 1.6 | | 33.3 |

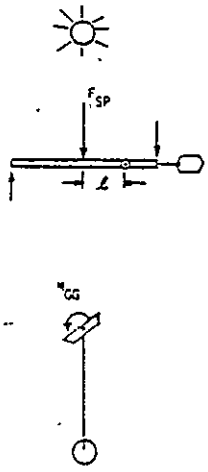


*TORQUE COUPLES ASSUMED

**100-CM ARGON THRUSTERS, T = 13n $I_{SP}$ = 13,000 SEC, $M_{S/C}$ = 36.6·10⁶ KG, $I_{XX}$ = 9.86·10⁷ KG-M, $I_{YY}$ = 3.09·10⁷ KG-M², $I_{ZZ}$ = 10.2·10⁷ KG-M (INCLUDING GROWTH)

in the presence of disturbing perturbations. These perturbation forces include the effects of earth gravitational anomalies, lunar and solar gravitational perturbations and the solar pressure force acting on the spacecraft. The thrusters that provide the forces and torques for attitude control also provide the necessary thrust for stationkeeping maneuvers.

The equatorial orbit is selected to minimize the impact of orbit inclination on rectenna size (and cost) requirements. This necessitates latitude (north-south) control.

The satellite longitude station must be selected within several degrees of its rectenna longitude in order to prevent an increase in rectenna size (and cost). The solar pressure induced perturbations are cyclical with an annual frequency and can be as large as ±3.1° if uncorrected. In order to minimize the SPS space requirement in GEO and to prevent interference with other satellites which do not experience as large a solar pressure perturbation as the SPS, it is assumed that this perturbation must be corrected. Because of the large magnitude of this correction, means of alleviating it should be investigated further in future studies.

To minimize interference with the large number of other satellites expected to be using this orbit by the 2000 time frame a stationkeeping accuracy of ±0.1 degree in longitude and latitude is adopted. The stationkeeping RCS requirements are summarized in Table 3.1-18. No stationkeeping thruster firings should be performed during eclipse periods in order to minimize the thruster power requirements. Cyclic perturbations with a period less than or equal to one day need not be corrected.

*Table 3.1-19. Stationkeeping RCS Requirements*

| FUNCTION | ΔV (m/s/YR) | PROPELLANT MASS (% S/C MASS OVER 30 YRS) | THRUST REQUIRED (N) | NUMBER OF THRUSTERS |
|---|---|---|---|---|
| • SOLAR PRESSURE (E-W)<br>• ANTENNA RADIATION PRESSURE (E-W)<br>• EARTH TRIAXIALITY (E-W)<br>• STATION CHANGE (E-W) | 282.5 | 6.65 | 328 | 25.2 |
| • SOLAR-LUNAR PERTURBATION (N-S) | 53.3 | 1.25 | 124** | 19.1** |
| TOTALS | 335.8 | 7.90 | 452 | 44.3 |

* - 100 CM ARGON THRUSTER, T = 13 N, ISP = 13,000 SEC

** - THRUST ON 50% OF TIME

Reaction Control System. The reaction control system (RCS) provides the necessary forces and torques for attitude control and stationkeeping. For the photovoltaic concept the RCS consists of four ion bombardment thruster modules with 16 thrusters at each corner of the vehicle. The argon propellant is stored cryogenically. A refrigeration system is ncessary to maintain the cryogenic temperatures. The thruster characteristics are given in Table 3.1.20.

*Table 3.1-20. Electric Thruster Requirements*

| CHARACTERISTICS | VALUE |
|---|---|
| THRUST | 12 N |
| SPECIFIC IMPULSE | 13,000 SEC |
| PROPELLANT | ARGON |
| APERTURE | 100 CM |
| OPERATING POWER | 1275 KW |

## Major Assemblies

Figure 3.1-24 illustrates the major assemblies comprising the ACSS. The description of each assembly, as applicable to the photovoltaic option, is given in the preceding section.

## Design and Performance Characteristics

The point design ACSS is described in Volume II.

## Subsystem Interfaces

The primary interfaces are the IMCS, the power distribution and control subsystem, and the structure. The IMCS, which functions as an integral part of the ACSS, also provides the interface for the ground support system to the ACSS. Figures 2.1-4 through 2.1-6 show the primary interfaces for the attitube reference system, the MW antenna pointing system, and the tank and engine system, respectively.

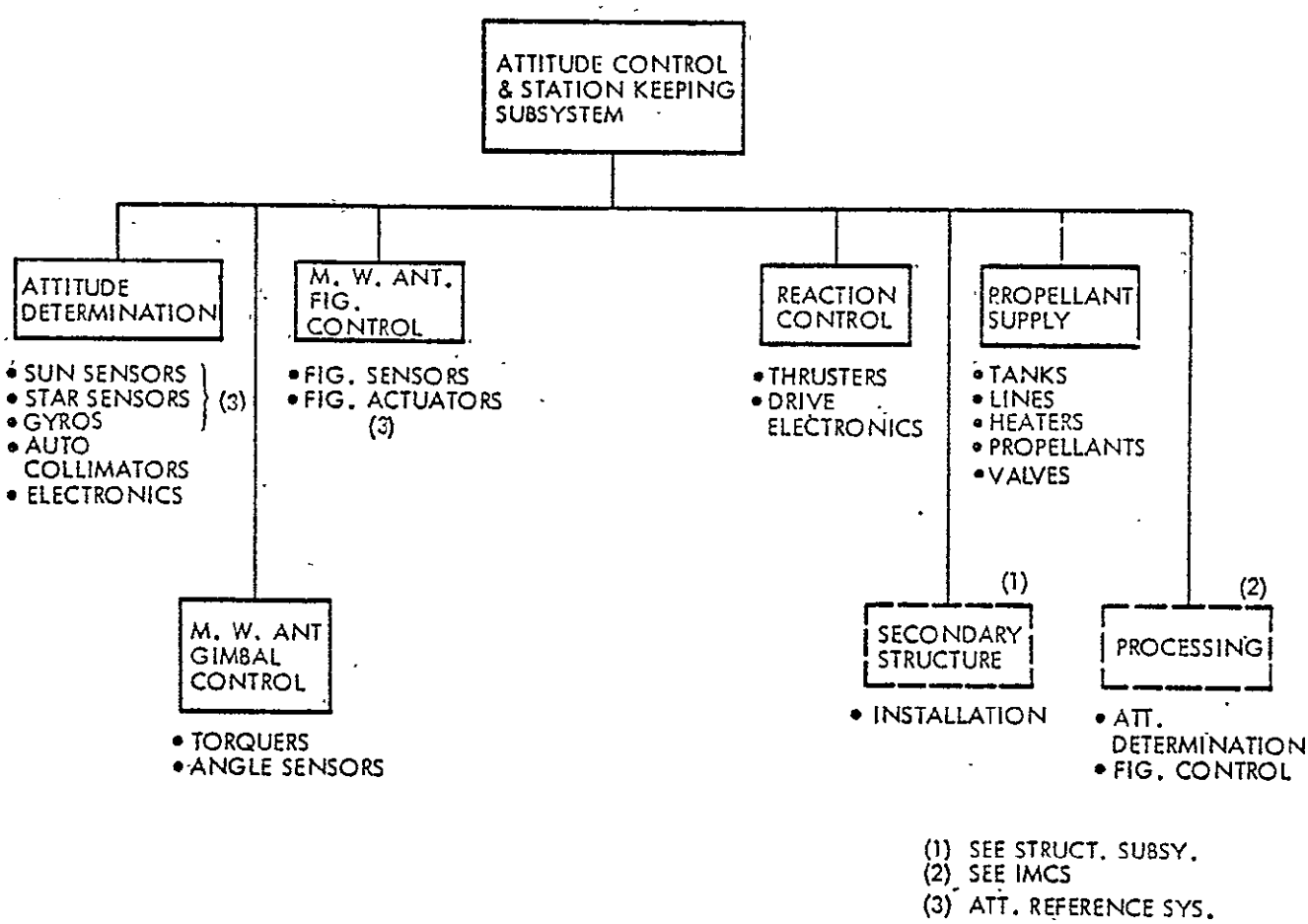


*Figure 3.1-24. Assembly Tree - Attitude Control and Stationkeeping Subsystem*

### 3.1.6 THERMAL CONTROL

The thermal control subsystem continuously maintains temperature levels within allowable extremes and provides equipment for heat dissipation, acquisition and temperature regulation where required. Both active and passive systems may be employed and components utilized include selective coatings, insulations, heaters, radiator networks, and specialized energy transport devices such as heat pipes. Thermal control impacts almost all satellite operations supporting power conversion, power distribution, the microwave generator and power transmission systems, the rotary joint, information management, primary and secondary structural design, and the ground receiving station.

Functional Requirements and Block Diagrams

The thermal control subsystem must satisfy functional requirements during all satellite operating phases indicated in Table 3.1-21. A simplified functional flow diagram of the thermal subsystem, indicating its relationship to other operating subsystems is illustrated in Figure 3.1-25. The klystron radiator heat pipe assembly is shown in Figure 3.1-26.

*Table 3.1-21. Thermal Control Subsystem - Operating Modes*

| Mode | Assembly | Functions |
|---|---|---|
| Construction | Subsystem | Maintain allowable temperature levels and gradients to restrict structural deformations/stresses and protect assemblies. |
| Inter-Orbit Transfer | Subsystem | Maintain allowable temperature levels and gradients; power required operation phases. |
| Operations | Subsystem | Support steady-state operation for all assemblies. |
| | P/C* Radiators | Reject waste heat generated by solar/thermal system as required. Fluid line resistance to ensure repeated meteoroid impacts. |
| | Klystron Radiators | Reject klystron waste heat. Maintain required antenna temperature profiles. Restrict thermal stresses which could impair microwave transmission. Minimize heat transfer to rotary joint, antenna structure, and electronics' modules. |
| Eclipse | Subsystem | Guarantee integrity of all systems during extended cooling and return to steady state; assure continuous operation of resumption after shutdown as required. |
| | P/C* Radiators | Drain fluid as necessary and provide localized heating if required; smooth restart to steady-state operation. |
| | Klystron Radiators | Recover from fluid (heat pipe) freeze-up. |
| Failure/Maintenance | Subsystem | Redundant capability, where possible; e.g., heat pipes, pumps. Provide rapid access to down components. |
| | P/C* Radiators | Leak isolation through application of valves and heat pipes. Fluid in lines can be drained. Minimize particle impact failures by use of armor/bumper combination. Failure identification by sensors, or possibly by visual method. |
| | Klystron Radiators | Redundant heat pipes. |
| Checkout | Subsystem | Ground test where possible; leak check; verify control response. |

*P/C = Power Conversion Subsystem

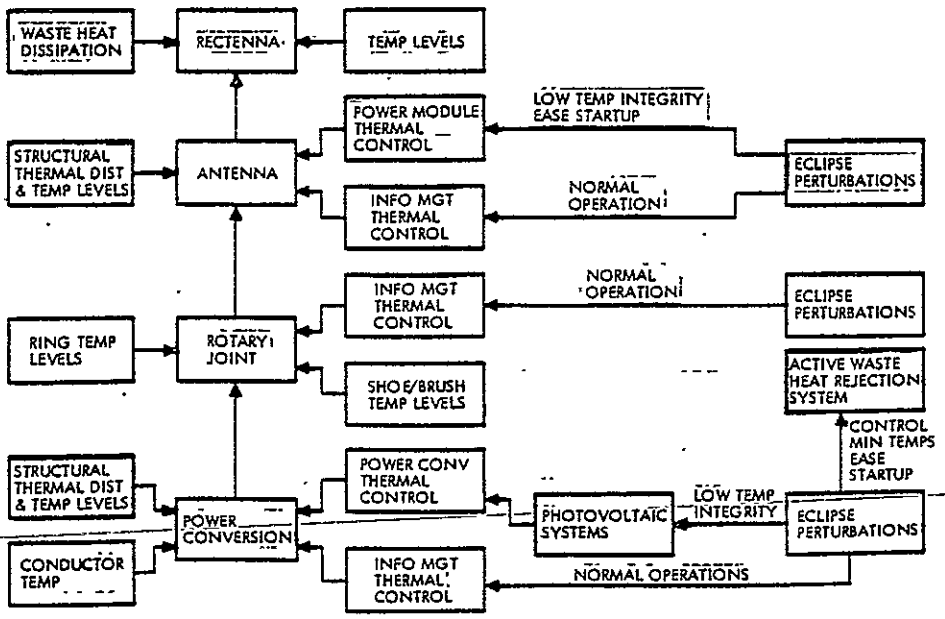


*Figure 3.1-25. Thermal Control Functional Flow Diagram*

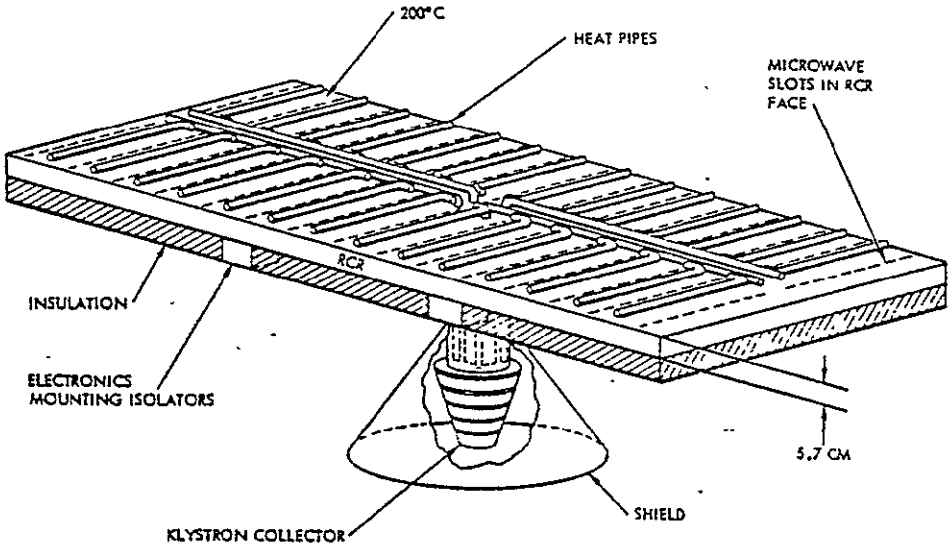


*Figure 3.1-26. Klystron Radiator Configuration*

Major Assemblies

Figure 3.1-27 illustrates the major assemblies and components comprising the thermal control subsystem.

Design and Performance Characteristics

Design and performance data for the klystron radiators are presented in Table 3.1-22.

## 3.1.7 INFORMATION MANAGEMENT AND CONTROL

The information management and control subsystem (IMCS) provides the interconnecting elements between and within all the various satellites and ground-based operational subsystems. The IMCS also provides operational control of both the satellite and ground systems as well as providing all subsystem processing support for all but very special functions.

The satellite IMCS consists of the on-board processing equipment [central processing units (CPU) and memories], the inter- and intra-subsystem data network (data buses), the man-machine interfaces (display/control), and inter-system communication links, including RF, but excepting those specifically provided for the control and transfer of primary power, and all elements provided to accommodate activities related to system security, safety, or any other operation necessary to the continuing operation of the SPS.

Because of the early stage of program analysis, only those requirements imposed upon the IMCS by a limited number of satellite operations have been identified. The identified requirements generally are limited to those associated with the immediate operations of an active satellite. Auxiliary functions such as ground/space communications, display/control, safety, security, etc., will be added when data become available.

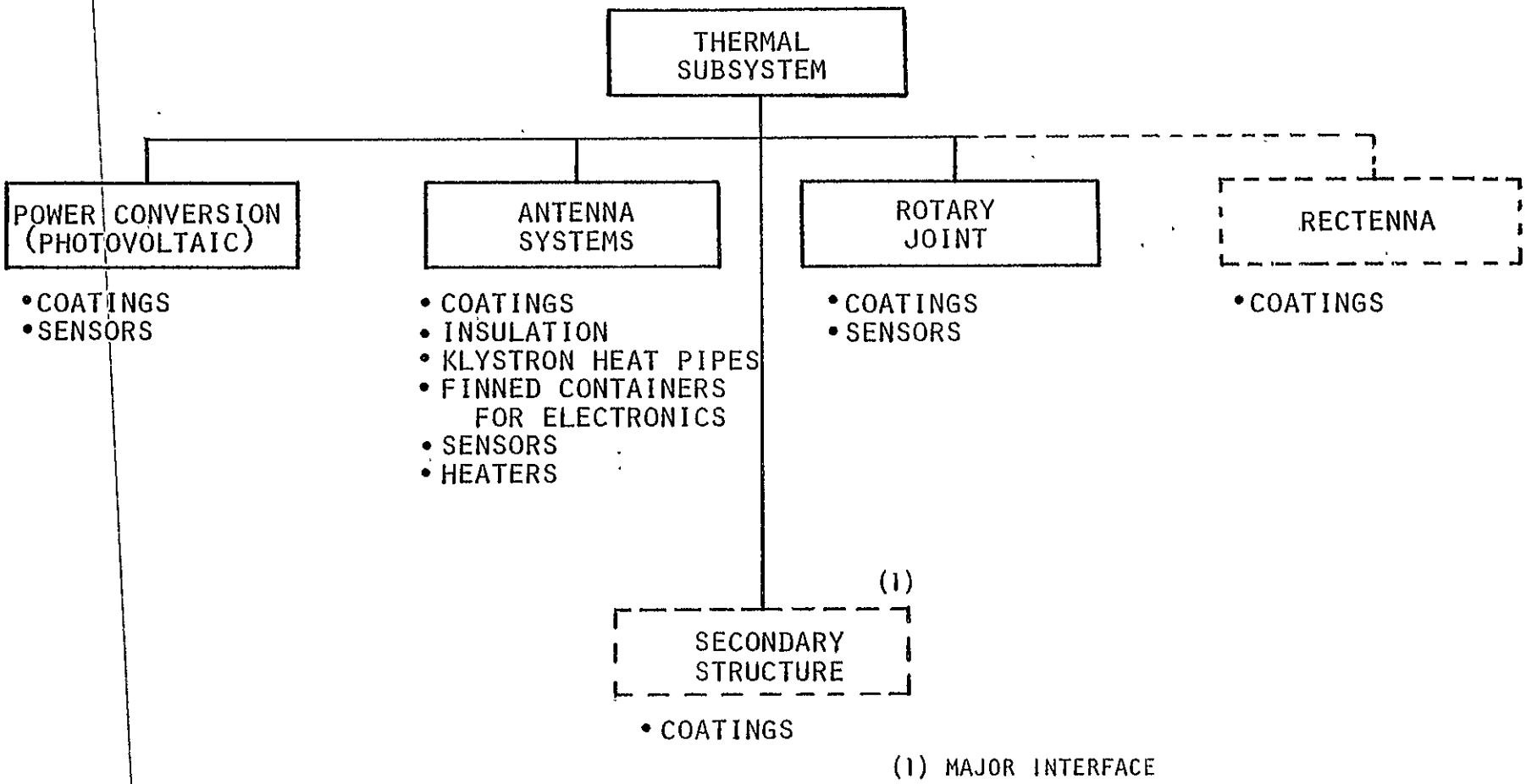


*Figure 3.1-27. Assembly Tree - Thermal Subsystem*



Satellite Systems Division
Space Systems Group
Rockwell International

*Table 3.1-22. Klystron Cavity Radiators (Maximum Intensity Region)*

| | |
|---|---|
| Total heat load (kW) | 3.264 |
| Driver cavities (kW) | 0.206 |
| Output cavity (kW) | 2.308 |
| Electromagnet (kW) | 0.750 |
| Radiator temperature (°C) | 198 |
| Radiator area, mine ($m^2$) | 2.36 |
| Fin material | Aluminum |
| Fin efficiency (%) | 60 |
| Coating (external) | Anodize (soft) |
| Coating (internal) | Anodize (hard) |

Heat Pipes - Four high-performance, arterial wick copper/water heat pipes of 28-in. length each 1/2 in. O.D. Twenty-eight axial groove copper/water heat pipes, 25 inches long, each 3/8 in. O.D. (Container is actually copper liner encased in aluminum tube). Total heat pipe assembly weight = 6.18 kg.

## Functional Requirements and Block Diagrams

The functional requirements for various operating modes are given in Table 3.1-23. The relationship of the IMCS to the other major subsystems is depicted in Figure 2.1-1. Figure 2.1-10 illustrates a representative processor hierarchy as applied to a solar photovoltaic power-generating satellite concept. The IMCS hierarchy applicable to the microwave antenna subsystem, attitude control and stationkeeping subsystem, and power distribution subsystems is presented in Figures 3.1-28 through 3.1-30, respectively. These hierarchies are established to the level at which the IMCS and the using subsystem interfaces are apparent (e.g., physical/electrical interface).

Table 3.1-24 summarizes the estimated number of data interfaces (not measurements) that must be accommodated by the IMCS. Note specifically that the microwave antenna subsystem is by far the major contributor to the determination of the complexity of the IMCS electrical interface. Table 3.1-25 provides a very preliminary estimate of the control interface that must be accommodated by the IMCS although the estimates for the other subsystems are not supported by an in-depth analysis. Again, the microwave antenna system predominates.

## Major Assemblies

Figure 3.1-31 identifies the major assemblies that form the IMCS. Six major assemblies have been identified at this time: (1) processors, (2) bus control units (BCU), (3) data bus, (4) remote acquisition and control units (RAC), (5) submultiplexers (SM), and (6) microprocessors (μp).

*Table 3.1-23. IMCS - Operating Modes*

| Mode | Assembly | Function |
|---|---|---|
| Construction | Subsystem | Temperature monitor<br>Attitude monitor and control<br>Safety monitor |
| Inter-Orbit Transportation | Subsystem | Power conversion and distribution<br>Monitor and control<br>Navigation<br>Attitude monitor and control<br>Subsystem monitor<br>Configuration control<br>MW pointing, gimbal pointing control |
| Operations | Subsystem | Steady-state monitor and control |
| Eclipse | Subsystem | Eclipse monitor<br>Shutdown/startup monitor and control<br>Subsystem standby monitor and control |
| Transition | Subsystem | Orientation monitor<br>Subsystem monitor and control |
| Failure/Maintenance | | Failure detection/isolation<br>Redundancy management<br>Auto shutdown/restart<br>Override control<br>Maintenance logging |

Processors. The satellite Master Control Computer (Figure 3.1-28) will operate with a 16-32 bit word format and have a 64K-128K word active memory plus a TBD billion word bulk storage facility. Second- and third-level processors (supervisory or local) will be 16-bit word assemblies and be limited to 16K-32K memories. In special cases, memory capacity may be increased to as much as 128K words. Assemblies or subassemblies identified as microprocessors (normally those units incorporated directly within the associated electronics) will incorporate an 8-bit-work format and use active 8K-64K word memories.

Bus Control Unit. The bus control unit (BCU) provides the control necessary for data/command transfer over the subsystem data bus network. The BCU accepts instructions and data (or commands) from its associated processor and translates these data from a processor-compatible format to one compatible with the data network. It also accepts bus-compatible data and converts these data to processor formats. In addition, the BCU monitors the data traffic--performing bit and word checks as well as health/status checks.

In addition to data bus control, the BCU will provide a computer-to-computer link where appropriate.

Data Bus. The data bus network accommodates multiplexed, digital data transmitted between the BCU and all other remotely located data acquisition and contral devices associated with a specific processor/BCU combination. The bus link may utilize conventional wire techniques for short runs in low EMI areas or fiber-optic technology for long paths or through high EMI areas. Basic bit rate within the bus assembly is assumed to be 1.0 Mbps. Included in the data bus assembly are the data bus coupling devices used to connect the various

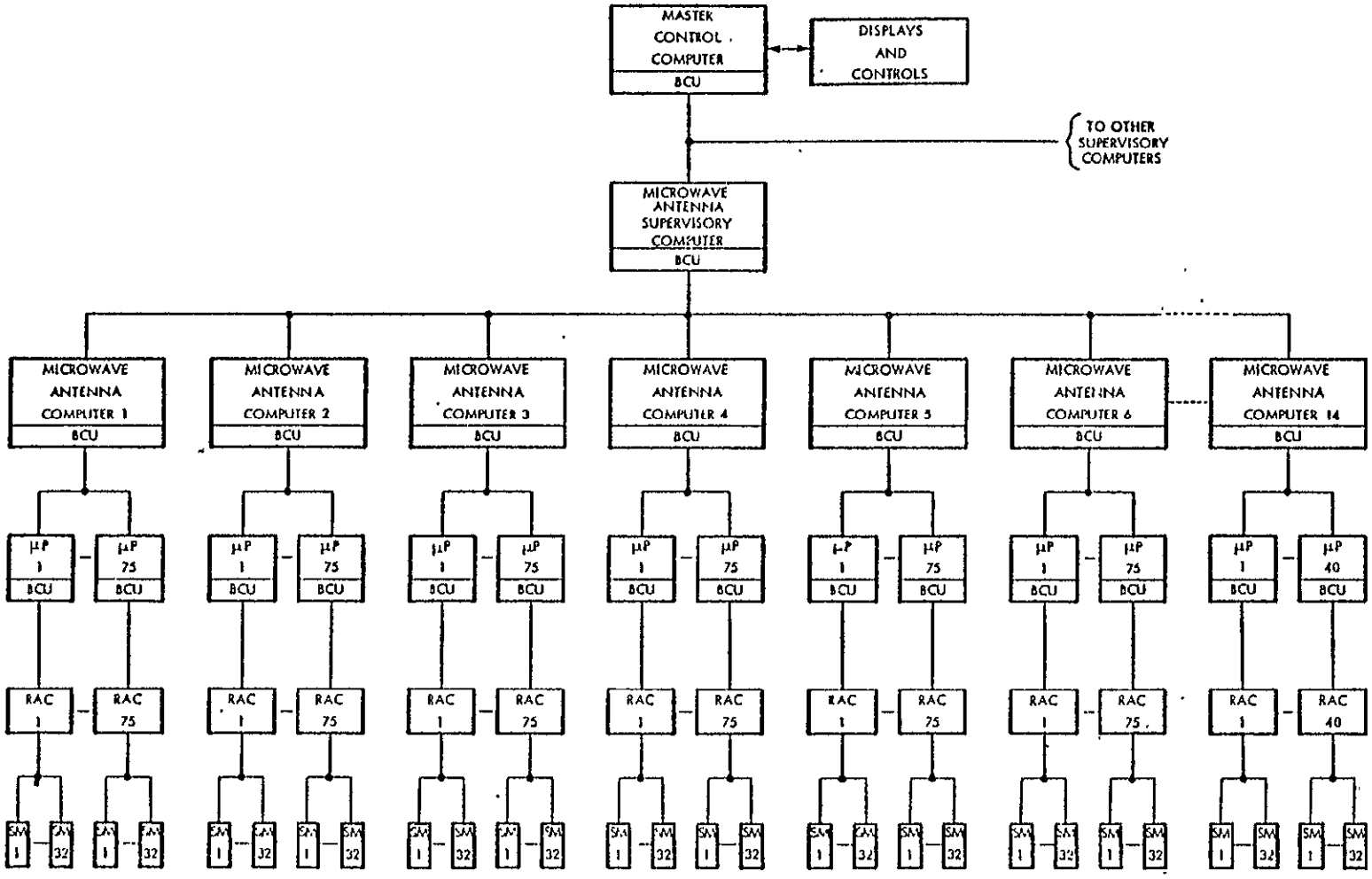


RAC - REMOTE ACQUISITION AND CONTROL UNIT
SM - SUB-MULTIPLEXER
μP - MICRO-PROCESSOR
BCU - BUS. CONTROL UNIT

*Figure 3.1-28. IMCS - MW Antenna*

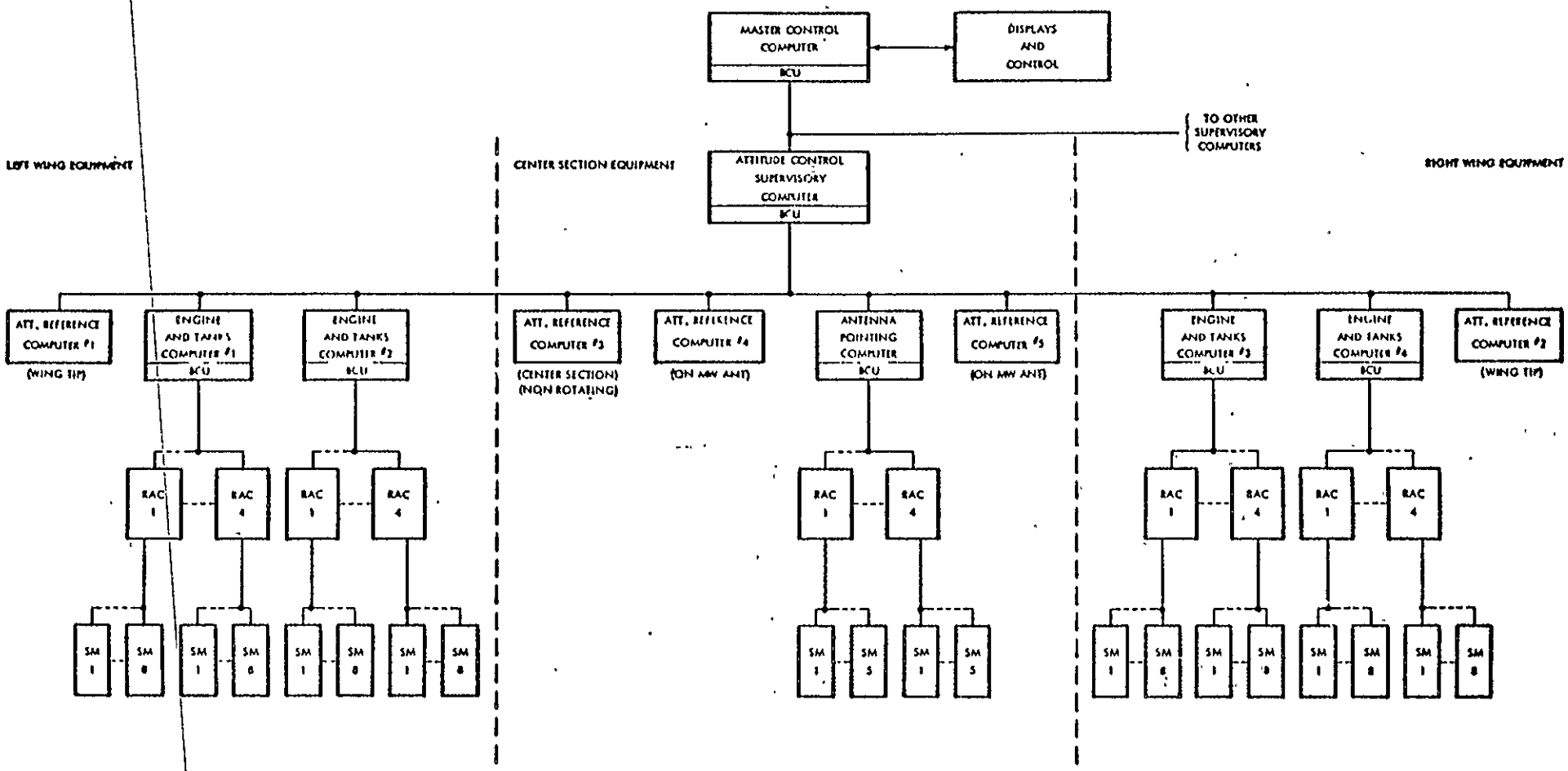


*Figure 3.1-29. IMCS - Attitude Control*



Satellite Systems Division
Space Systems Group
Rockwell International

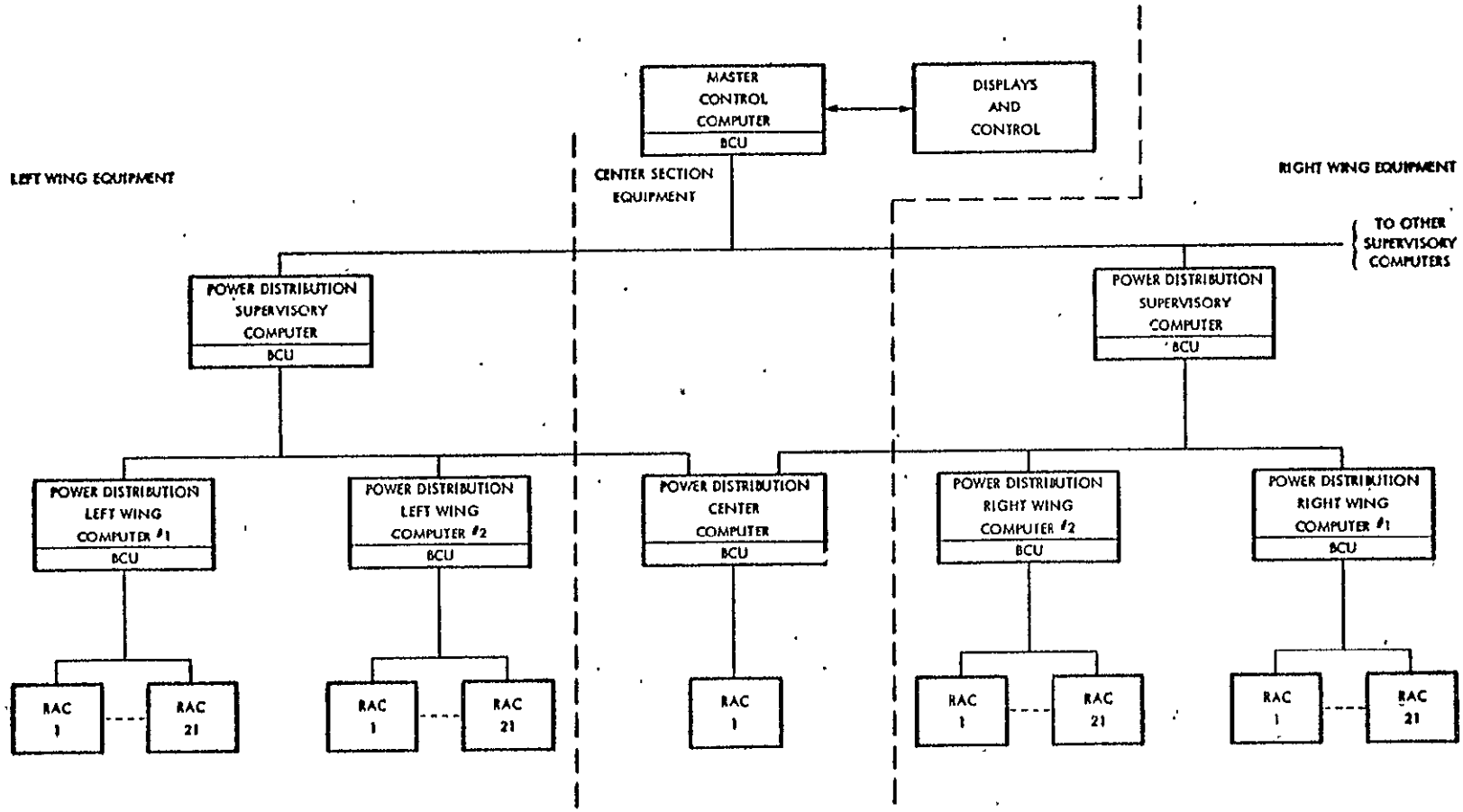


*Figure 3.1-30. IMCS - Power Distribution*

*Table 3.1-24. Preliminary Data Interface Summary - Photovoltaic (CR-2) Configuration*

| | ANALOG | DIGITAL | EVENT | TOTAL |
|---|---|---|---|---|
| MICROWAVE ANTENNA | $6\times10^6$ | $1\times10^6$ | $2.1\times10^6$ | $>9\times10^6$ |
| OTHER SUBSYSTEMS | | | | |
| STRUCTURE | 35 | 35 | 35 | >100 |
| ATT. CONTROL & STATIONKEEPING | 900 | 800 | 1000 | ~3000 |
| POWER DISTRIBUTION | 1000 | 100 | 2000 | ~3000 |
| INFORMATION MANAGEMENT | - | ~19,000 | - | ~19,000 |
| THERMAL | 16,000 | - | - | 16,000 |
| LIFE SUPPORT | TBD | TBD | TBD | TBD |
| SAFETY AND SECURITY | TBD | TBD | TBD | TBD |

*Table 3.1-25. Preliminary Control Interface Summary - Photovoltaic (CR-2) Configuration*

| | PROPORTIONAL | EVENT | TOTAL |
|---|---|---|---|
| MICROWAVE ANTENNA | $<13.6\times10^4$ | $30\times10^4$ | $<44\times10^4$ |
| OTHER SUBSYSTEMS | | | |
| STRUCTURE | ~35 | ~35 | <100 |
| ATTITUDE CONTROL & STATIONKEEPING | ~100 | >300 | <500 |
| POWER DISTRIBUTION | - | >300 | >300 |
| INFORMATION MANAGEMENT | - | >3000 | >3000 |
| THERMAL | - | - | - |
| LIFE SUPPORT | TBD | TBD | TBD |
| SAFETY AND SECURITY | TBD | TBD | TBD |

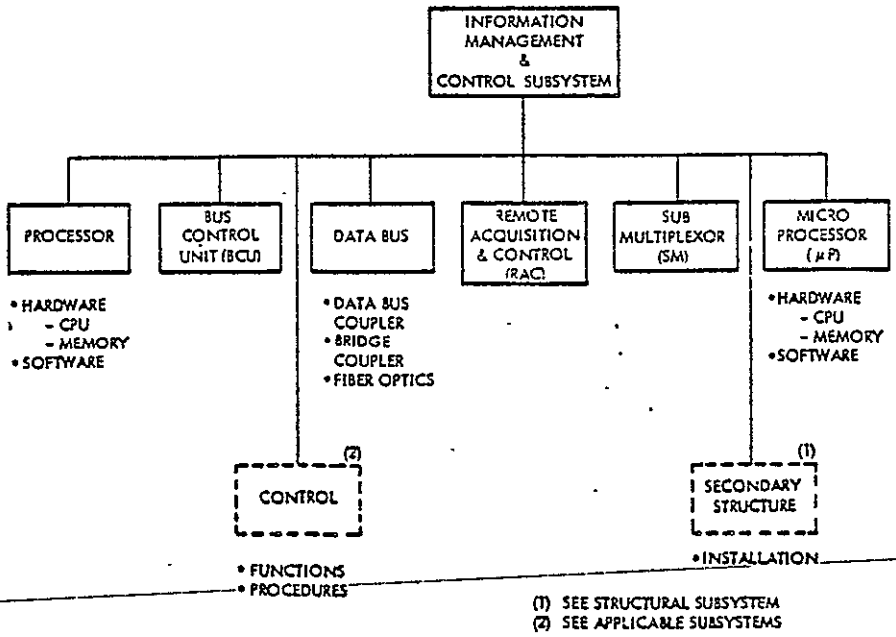


*Figure 3.1-31. Assembly Tree - Information Management and Control Subsystem*

remote units (one required per remote) as well as the bridge coupler required to transfer data across the microwave antenna rotary joints; the latter element is presently TBD.

Remote Acquisition and Control. The remote acquisition and control (RAC) assembly is the basic interface between the IMCS and the various operating subsystems. The RAC provides for data format conversion from the preconditioned analog, digital or event voltage/impedance levels, and converts these data into 8-big digital, serial, equivalents. The RAC also accepts digital data words and outputs commands in a format compatible with the receiving subsystems.

Basic conversion (input/output) is assumed to be ±1% (e.g., 7-bit and sign). Voltage ranges and impedances are TBD.

Submultiplexers. The submultiplexer (SM) provides a means of expanding the capability of the RAC. The SM thus contains all of the capabilities of an RAC, but can only communicate with a single RAC rather than a given data bus. The number of SM's that can communicate with an RAC is presently TBD.

Microprocessor. The microprocessor (μp) elements provide local, front-end processing of data obtained from the various using systems. These processors will handle the bulk of the system's monitoring and control task, sending raw data up through the computer hierarchy only when the task-levels exceed preestablished limits, or when detected out-of-tolerance conditions exceed local control boundaries. These devices are solid state and could normally be integrated within the user electronics. When necessary, the μp can be located within the RAC's or SM's to provide local performance monitoring and control.

Subsystem Definition and Interface

The subsystem interfaces for the three major subsystems are indicated in Figure 2.1-2 through 2.1-11. Table 3.1-26 summarizes the number of IMCS elements required for a typical photovoltaic configuration. Table 3.1-27 summarizes the physical (weight, power, volume) requirements for this system.

*Table 3.1-26. Hardware Summary*

| HARDWARE ELEMENT | FUNCTION | | | | | | | |
|---|---|---|---|---|---|---|---|---|
| | MASTER CONTROL COMPUTER | DISPLAY AND CONTROL | SUPER-VISORY COMPUTER | REMOTE COMPUTER | MICRO-PROC. | BUS CONTROL UNIT | REMOTE ACQUIS. AND CONTROL | SUB-MUX |
| SATELLITE CONTROL | 2 | 1 | - | - | - | 2 | - | - |
| THERMAL CONTROL | - | - | 2 | 5 | - | 7 | 85 | 1,352 |
| STRUCT. ALIGN. | - | - | - | 3 | - | 3 | - | - |
| ATTITUDE CONTROL | - | - | 1 | 10 | - | 11 | 28 | 148 |
| POWER DISTRIB. | - | - | 2 | 5 | - | 7 | 85 | - |
| MICROWAVE ANTENNA CONTROL | - | - | 1 | 14 | 777 | 792 | 787 | 29,500 |
| TOTAL | 2 | 1 | 6 | 37 | 777 | 822 | 985 | 31,000 |

*Table 3.1-27. Weight/Power/Volume Summary - IMCS*

NON-ROTATING

| HARDWARE ELEMENT | QUANTITY | UNIT MASS (Kg) | TOTAL MASS (Kg) | UNIT POWER (KW) | TOTAL POWER (KW) | UNIT VOLUME ($m^3$) | TOTAL VOLUME ($m^3$) |
|---|---|---|---|---|---|---|---|
| MASTER CONTROL COMPUTER | 2 | 500 | 1,000 | 2 | 4 | 0.4 | 0 8 |
| DISPLAY & CONTROL SET | 1 | 200 | 200 | 0 9 | 0.9 | 0.72 | 0.72 |
| SUPERVISORY COMPUTER | 5 | 14 | 70 | 0 07 | 0.35 | 0 01 | 0.05 |
| REMOTE COMPUTER | 23 | 14 | 322 | 0.07 | 1.61 | 0.01 | 0.23 |
| MICRO-PROCESSOR | - | 5 | - | 0.02 | - | 0 003 | - |
| BUS CONTROL UNIT | 30 | 5 | 150 | 0 02 | 0.6 | 0.005 | 0.15 |
| REMOTE ACQUISITION & CONTROL | 198 | 5 | 990 | 0 02 | 3 96 | 0 005 | 0.99 |
| SUB MULTIPLEXOR | 1 500 | 3 | 4,500 | 0 01 | 15 0 | 0 003 | 4 5 |
| SUBTOTAL | | | 7,232 | | 26 42 | | 7 44 |

ROTATING

| | | | | | | | |
|---|---|---|---|---|---|---|---|
| MASTER CONTROL COMPUTER | - | 500 | - | 2 | - | 0.4 | - |
| DISPLAY & CONTROL SET | - | 200 | - | 0 9 | - | 0.72 | - |
| SUPERVISORY COMPUTER | 1 | 14 | 14 | 0 07 | 0 07 | 0 01 | 0.01 |
| REMOTE COMPUTER | 14 | 14 | 196 | 0 07 | 0.98 | 0 01 | 0 14 |
| MICRO PROCESSOR | 777 | 5 | 3,885 | 0 02 | 15.54 | 0 003 | 2.331 |
| BUS CONTROL UNIT | 792 | 5 | 3,960 | 0 02 | 15 84 | 0 005 | 3 96 |
| REMOTE ACQUISITION & CONTROL | 787 | 5 | 3,935 | 0 02 | 15.74 | 0 005 | 3.935 |
| SUB MULTIPLEXOR | 29 500 | 3 | 88 500 | 0 01 | 295 0 | 0 003 | 88 5 |
| SUBTOTAL | | | 100 490 | | 343 17 | | 98 876 |
| TOTAL | | | 108,000 | | 369 6 | | 106 3 |

CABLE

| | | | | | | |
|---|---|---|---|---|---|---|
| NON-ROTATING-WIRE (22GA) | 1,200 KM | 12 0/KM | 14 000 | | $2x10^{-5}$/KM | 0 48 |
| FIBER OPTICS | 90 KM | 0 14/KM | 12 | | $2x10^{-6}$/KM | |
| ROTATING-WIRE | 23,000 KM | | 279,000 | | | |
| FIBER OPTICS | 350 KM | | 50 | | | |
| TOTAL | | | 293 000 | | | 0.48 |

## 3.2 GROUND RECEIVING STATION

The following subsections of this document describe the requirements, major assemblies, characteristics, and definitions for the subsystems comprising the ground receiving station(GRS) element of the SPS. An artists illustration of the ground receiving station complex is shown in Figure 3.2-1. The major effort to date has been limited to the establishment of the receiving/rectifying portion (rectenna) and the power distribution network. A limited evaluation and characterization of the data management and control subsystem and the data conversion system has been made. A final area lightly touched upon during the course of the study was a preliminary identification of the need for a separate beam monitoring system to backup the retrodirective beam concept. No data for the latter system has been derived. The assembly tree for the overall GRS is shown in Figure 3.2-2.

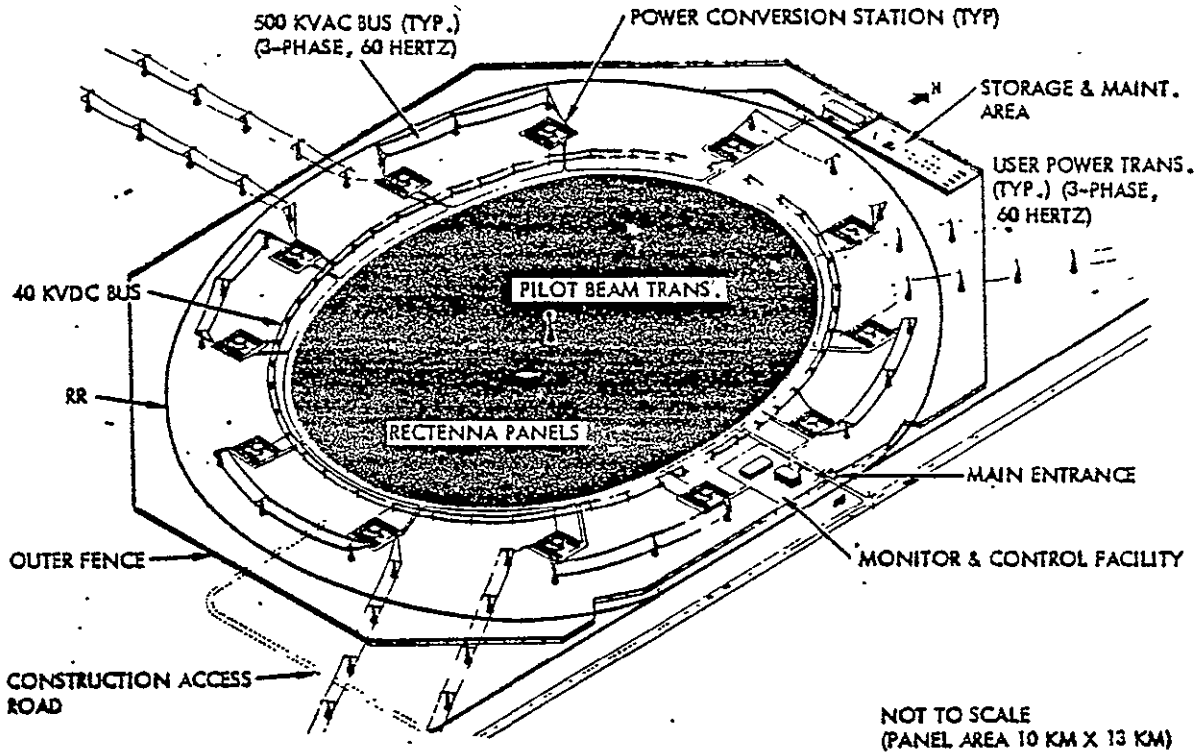


*Figure 3.2-1. Operational Ground Receiving Facility (Rectenna) - Typical*

A separate study activity, under task 2 of the primary SPS study, was made to evaluate the system control requirements. The results of this latter study is documented in Section 8.0, Volume V of the final report.

### 3.2.1 RECTENNA

The rectenna subsystem consists of microwave receiving elements (dipoles), rectifiers, regulators and isolating motorswitches (Figure 3.2-3). The dipoles are fabricated using a multilayer (sandwich) construction of copper and dielectric insulators formed into panels. A rectification element consisting of a GaAs diode and filters is added to convert the received microwave energy into dc. Conversion efficiency is estimated to be 89%.

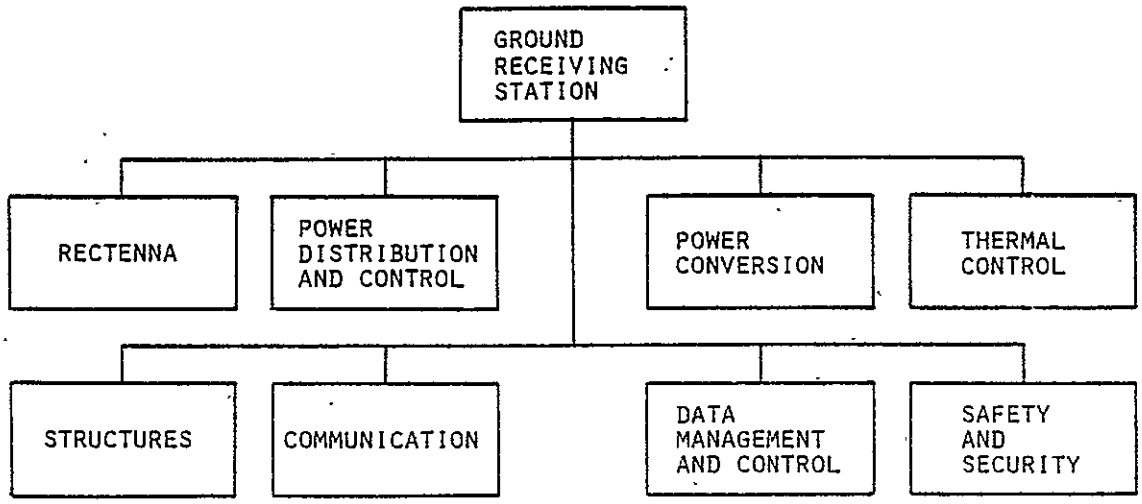


*Figure 3.2-2. Ground Receiving Station Subassembly Relationships*

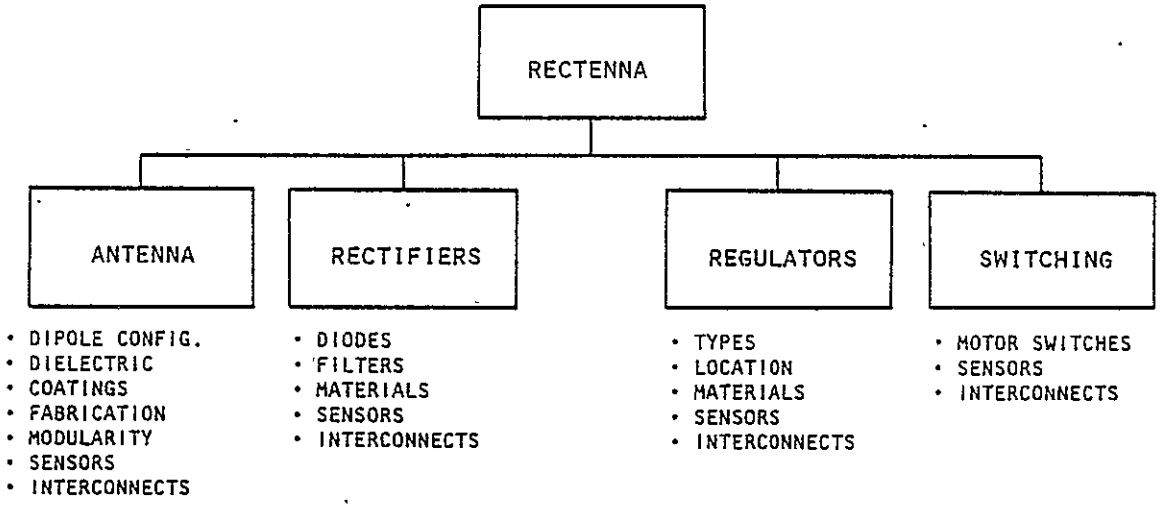


*Figure 3.2-3. Assembly Tree - Rectenna*

## Functional Requirements and Block Diagrams

The functional requirements for the rectenna subsystem are listed in Table 3.2-1. A simplified schematic block diagram is presented in Figure 3.2-4.

## Major Assemblies

The major assemblies and components that are required for the rectenna subsystem are shown in Figure 3.2-5.

Antenna. The antenna is a multilayer copper/dielectric sandwich panel as shown in Figure 3.2-5. The total antenna system consists of 580,500 panels each 9.33×14.69 m. These panels are in turn made up of twenty 0.74×9.33 m sub-panels mounted on a supporting structure (see structure subsystem). Total surface area (in GRS) is 79.56 $km^2$.

*Table 3.2-1. Rectenna Functional Requirements*

| PROGRAMMATIC |
|---|
| ENERGY SOURCE - MICROWAVE AT 2.45 GHz<br>CAPACITY - 5 GW (NOMINAL) DELIVERED TO POWER DISTRIBUTION NETWORK<br>LIFETIME - 30 YEARS WITH MINIMUM PLANNED MAINTENANCE (SHOULD BE CAPABLE OF EXTENDED LIFE BEYOND 30 YEARS WITH REPLACEMENT)<br>IOC DATE - 2000<br>OPERATIONS - ANYWHERE WITHIN OR IMMEDIATELY ADJACENT TO CONTINENTAL U.S.A.<br>RESOURCES - MINIMUM USE OF CRITICAL RESOURCES<br>COMMERCIALIZATION - COMPATIBLE WITH UNITED STATES UTILITY NETWORKS<br>DEVELOPMENT - EVOLUTIONARY, WITH PROVISIONS FOR INCORPORATING LATER TECHNOLOGY |
| **TECHNOLOGY** |
| OUTPUT POWER—POWER LEVEL IS DEFINED AS CONSTANT POWER LEVEL (5 GW, MAX), EXCEPT DURING SOLAR ECLIPSE<br>ENERGY STORAGE—NONE<br>FAILURE CRITERIA—NO SINGLE-POINT FAILURE MAY CAUSE TOTAL LOSS OF SPS FUNCTION<br>ENERGY PAYBACK—LESS THAN THREE YEARS<br>COST—COMPETITIVE WITH HYDROCARBON OR HYDROELECTRIC POWER GENERATION CONCEPTS WITHIN LIFETIME OF SPS PROJECT |

OPERATION

| MODE | ASSEMBLY | FUNCTION |
|---|---|---|
| CONSTRUCTION | SUBSYSTEM | NONE |
| OPERATIONS | SUBSYSTEM | STEADY-STATE OPERATION |
| ECLIPSE | SUBSYSTEM | OPEN ISOLATION SWITCHES<br>CLOSE ISOLATION SWITCHES |
| FAILURE/MAINTENANCE | SUBSYSTEM | VOLTAGE CHECKS; SWITCH STATUS |
| CHECKOUT | SUBSYSTEM | FAIL-SAFE CHECKS; CONTROL RESPONSE |

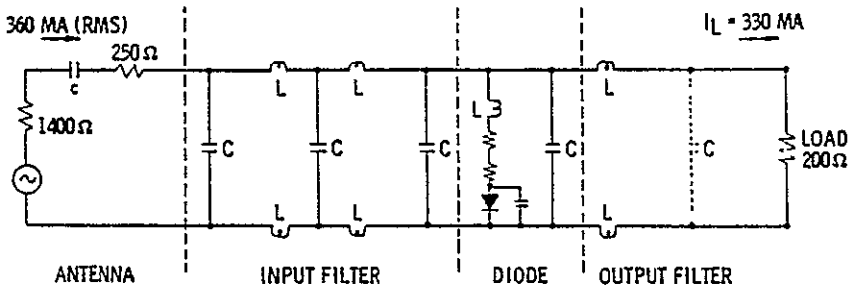


*Figure 3.2-4. Simplified Schematic - Rectenna*

Rectifier. The rectifier assembly consists of a GaAs diode and input/output filters. An illustration of a possible diode configuration is shown in Figure 3.2-5. The equivalent schematic of the rectifier/filter circuit is shown in Figure 3.2-4. The outputs of the rectifier circuit are series connected to output 40+ kV.

Regulators. The regulation assembly accepts the voltage from the series connected rectenna diodes and adjusts the voltage output to the power distribution feeders to a value consistant with positive current flow.

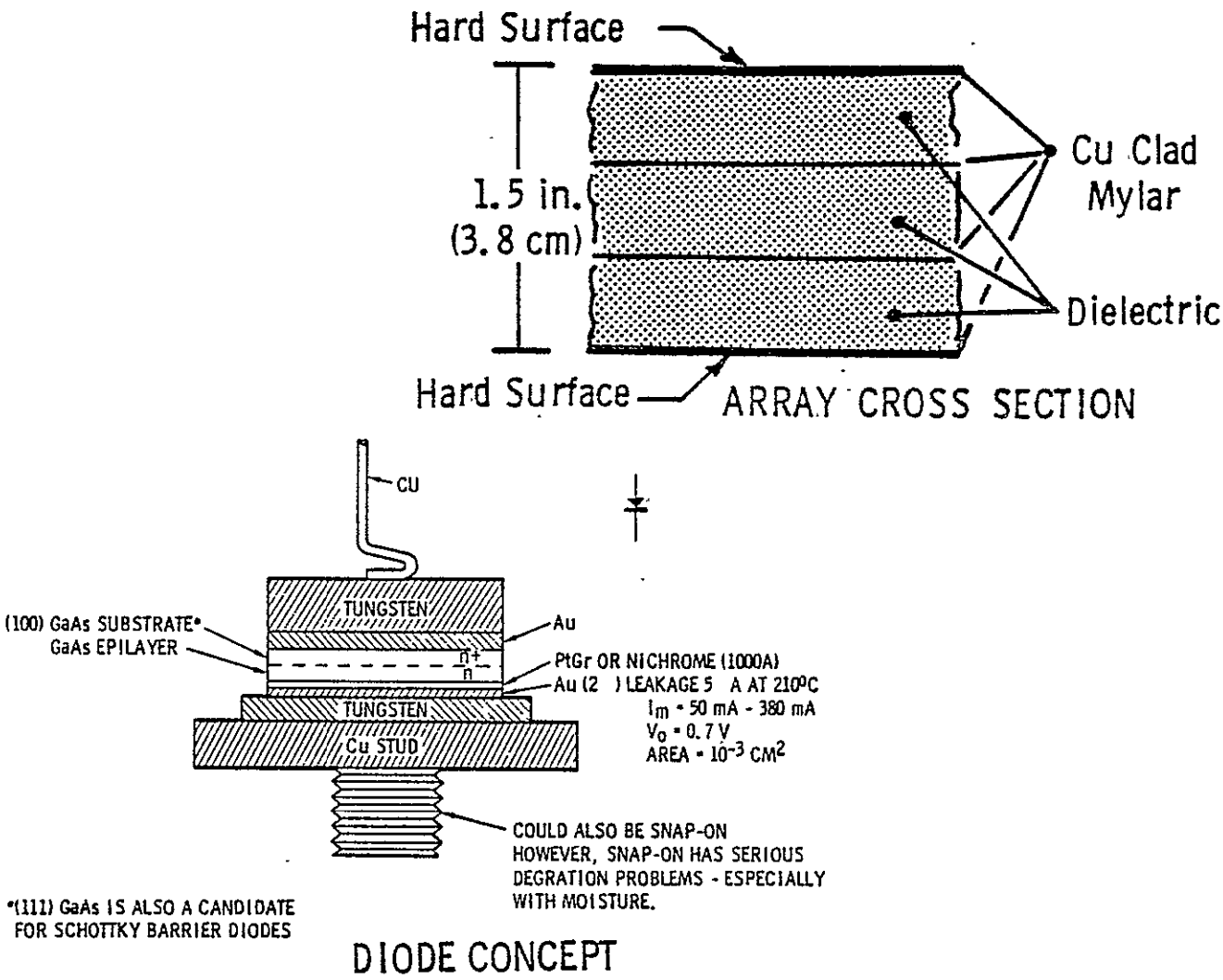


*Figure 3.2-5. Rectenna Systems Major Assembly/Component*

Switching. The motor switches provide for no load isolation of each independent voltage string.

Design and Performance Characteristics

The design and performance characteristics of the rectenna subsystem are presented in Table 3.2-2.

Subsystem Definition and Interfaces

The subsystem interfaces are shown in Figure 3.2-3. Details of the interface are TBD.

### 3.2.2 POWER DISTRIBUTION AND CONTROL

The power distribution and control subsystem receives power from the rectenna subsystem and provides the switching required to deliver the power to the power conversion stations, and then delivers the power station outputs

*Table 3.2-2. Rectenna Preliminary Specifications*

| ITEM | CHARACTERISTIC |
|---|---|
| INTERCEPTED ENERGY (GW) | 5.53 |
| FREQUENCY (GHz) | 2.45 |
| RECTENNA EFFICIENCY (%) | 89 |
| CLUSTER OUTPUT | TBD |
| VOLTAGE STRING OUTPUT (KV) | 40+ |
| RECTENNA OUTPUT ENERGY (GW) | 4.93 |
| NUMBER OF DIODES | $330\times10^6$ |
| RECTENNA SUBPANEL SIZE (M) | 0.735×9.33 |
| PANEL DIMENSIONS (M) | 14.69×9.33 |
| NUMBER OF PANELS IN RECTENNA | 580,500 |
| PANEL AREA ($KM^2$) | 79.56 |
| RECTENNA CONFIGURATION | ELLIPSE |
| RECTENNA DIMENSIONS (KM) | 10×13 |
| RECTENNA GROUND AREA ($KM^2$) | 102.5 |

to interconnected utility interfaces. The feeders, and power cabling as well as internal transmission towers and cabling are included. Power transmission, (high tension cabling), from the designated interface at the perimeter of the ground receiving station are the responsibility of the power utility. The grounding, electromagnetic interference control, and all shielding requirements are also included. The life expectancy of the power distribution system is 30 years. The responsibility for auxiliary power systems used to maintain critical subsystems is TBD.

Functional Requirements and Diagrams

Functional requirements for various operating modes are listed in Table 3.2-3. A specified schematic block diagram for the ground receiving station is presented in Figure 3.2-6.

*Table 3.2-3. Power Distribution and Control - Operating Modes*

| MODE | ASSEMBLY | FUNCTION |
|---|---|---|
| CONSTRUCTION | N/A | N/A |
| OPERATION | SUBSYSTEM | STEADY-STATE OPERATION |
| ECLIPSE | SUBSYSTEM | STARTUP/SHUTDOWN, BACKUP POWER TO CRITICAL SUBSYSTEMS |
| FAILURE/ MAINTENANCE | SUBSYSTEM | REDUNDANT OPERATION, AUTO SHUT-DOWN |
| CHECKOUT | SUBSYSTEM | CONTINUITY, INSULATION RESIST-ANCE SWITCHING RESPONSE |

Major Assemblies

Figure 3.2-7 illustrates the major assemblies comprising the power distribution and control subsystem.

Power Distribution. The power distribution assembly consists of the main feeders, secondary feeders, 40 kV dc and 500 kV ac buses, tie bars and power interface cabling for the various operating subsystems. The main feeders are sized to handle gradually increasing current loads starting at the center of

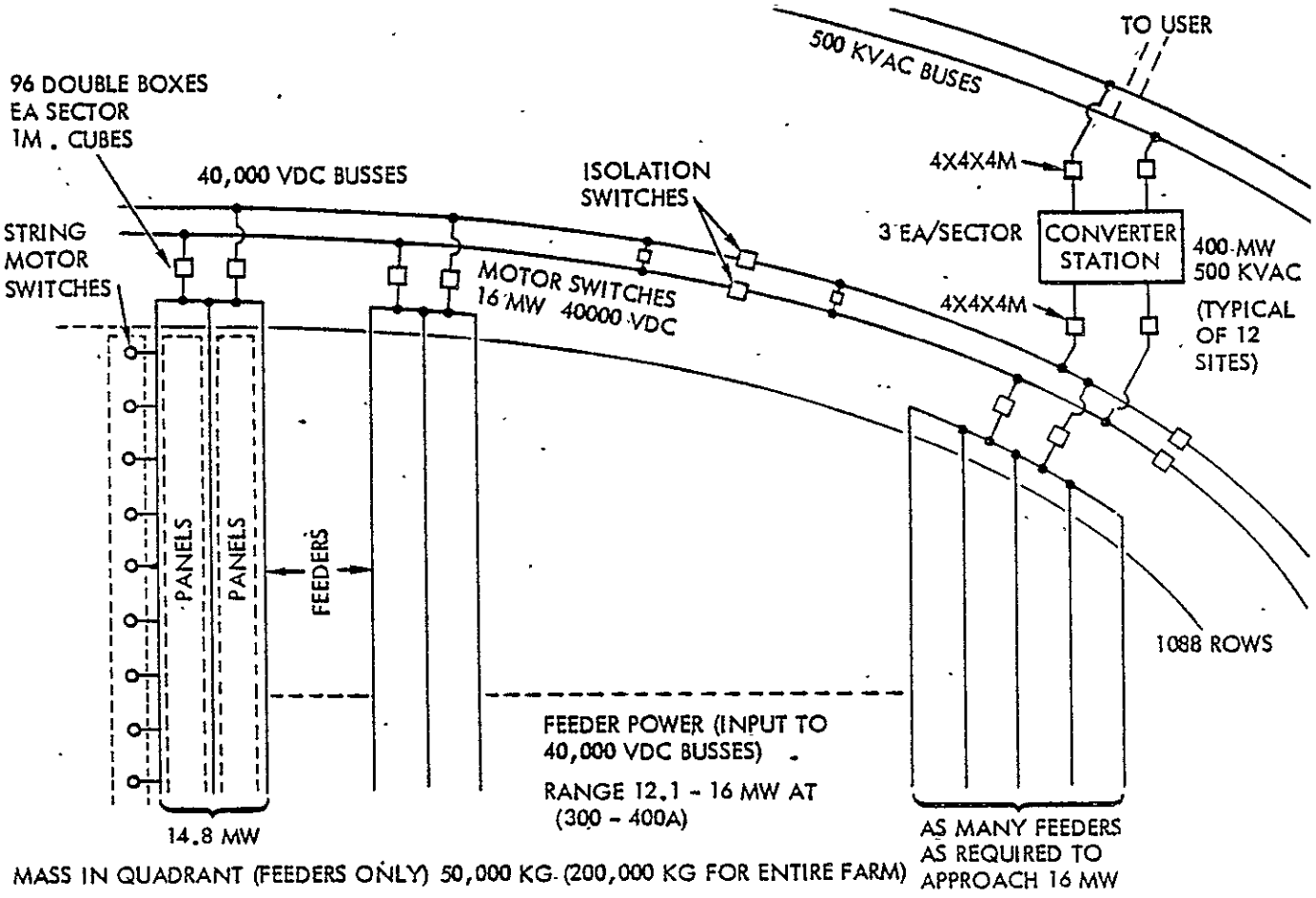


*Figure 3.2-6. Rectenna Schematic Block Diagram - Preliminary*

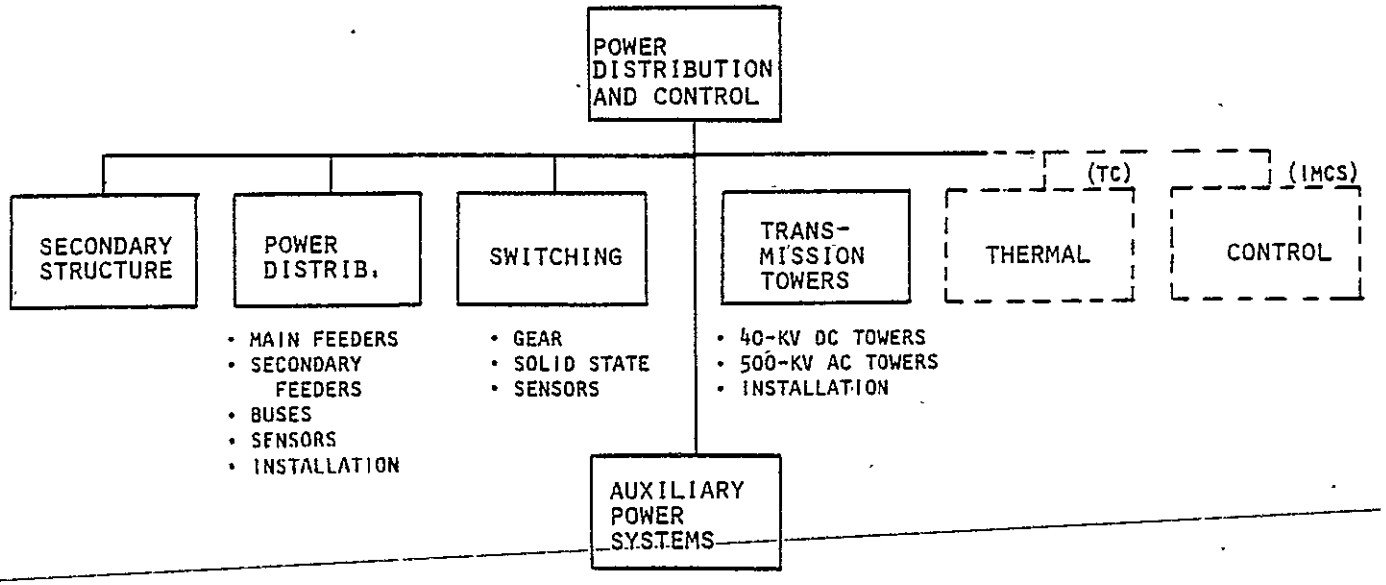


*Figure 3.2-7. Assembly Tree - Power Distribution and Control*

the rectenna array and continuing to the perimeter. The feeders are grouped in each quadrant of the array to permit systematic maintenance and to avoid catastropic system failures. The main feeders utilize TBD cm round aluminum cables, uninsulated, mounted on insulated standoffs or in insulated raceways. Other feeders, tie lines, buses, etc., are sized to handle maximum estimated loads, at specified voltages. All cables are passively cooled by radiation to local environment.

Switching. Switchgears are used for:

- Isolation/selection of various power feeders as a result of changes in power demand or as the result of systematic element failures.
- Isolation/selection of power conversion stations as load demand varies or due to systematic failure.
- Isolation of loads as satellite power capability varies due to predicted (eclipse, maintenance, etc.) power reductions or due to unpredicted (systematic failures) power reductions.

The switchgears may be solid-state or electromechanical. The voltages and currents being handled by these switches will be monitored by the IMCS to determine their status and to establish a need for the automatic opening of these switches (circuit breaker function). Switch closure will be based upon fault status and power demand. During shutdown operations the system will be monitored and when certain conditions are reached a command signal will automatically open or close selected switches as required.

Control. The power distribution control concept is based upon a continuous monitor function performed by the station resident IMCS. The IMCS also formats concise system display summaries to permit efficient transfer of information to the system operators. Where control discussions must be made at a rate beyond that possible through human intervention, preprogrammed control sequences will be initiated to establish desired system configuration. Primary system control, except for emergency situations, is vested in human operators.

Included in the general category of control are the functions associated with the man-machine interface, i.e., display and control.

Secondary Structures. Secondary structures consist of mounting brackets, clamps, raceways, as well as all other secondary installation devices as needed. It is assumed that a delta of TBD percent of the subsystem mass is reasonable.

Transmission Towers. The 40 kV dc and 500 kV ac power buses are supported by suspension towers around the perimeter of the rectenna area but within the outer station perimeter fence. The 40 kV dc supports consists of four 18 meter high, tapered, steel poles. The 500 kV ac towers are standard 70 meter towers similar to those used for cross-country transfer of power from sources such as Hoover Dam or TVA.

## Design and Performance Characteristics

The design and performance characteristics for the power distribution subsystem are listed in Table 3.2-4.

*Table 3.2-4. Design and Performance Characteristics*

| Major Assembly | Requirements | Technology Issue |
|---|---|---|
| GENERAL | | |
| Mass | Configuration dependent | |
| MTBF | Subsystem dependent | |
| Life | 30 years | |
| Efficiency | 88-98% (config. dependent) | |
| Resupply and maintenance | As needed | |
| POWER DISTRIBUTION (PD) | Mostly round conductor | |
| Mass | Configuration dependent | |
| Material | Aluminum 6001-T6 | |
| Insulation | TBD | |
| Efficiency | 88-98% (config. dependent) | |
| Subsystem cabling | Location and power dependent | |
| Resupply and maintenance | As required | |
| Life | 30 years or greater | |
| SWITCH GEAR | | |
| Density | Approx. 0.00086 kg/kW | Study is required to specify design requirements. |
| Type | Solid state | |
| Power rating | Configuration dependent | |
| Voltage | Config. and location dependent | |
| Efficiency | 99-99.9% | |
| Life | 30 years | |
| Resupply and maintenance | As required | |
| SECONDARY STRUCTURE | | |
| Mass | TBD% of PDS weight was considered to be required for mounting and installation. | |
| CONTROL | | |
| Temperature sensors | No. of sensors config. dependent | |
| Current sensors | No. of sensors config. dependent | |
| Voltage sensors | No. of sensors config. dependent | |
| Switch gear control | Configuration dependent | |
| Overcurrent | | |
| Overvoltage | | |
| Undercurrent | | |
| Undervoltage | | |

## Subsystem Definition and Interfaces

Subsystem interfaces are shown in Figure 3.2-6 for the power distribution subsystem approach selected for ground receiving station. Power handling capacity is estimated to range up to 5.0 GW.

### 3.2.3 STRUCTURES

The GPS structure assemblies considered in this report are primarily those associated with the support of the rectenna panels, plus the secondary elements already discussed in Section 3.2.2. Included in this subsystem are concrete footing, steel primary and secondary support structure, bracing and the various

connection fittings. A more detailed description of the installation activities and procedures is presented in Volume V of this report.

An artists representation of the basic element, the rectenna, is shown in Figure 3.2-8.

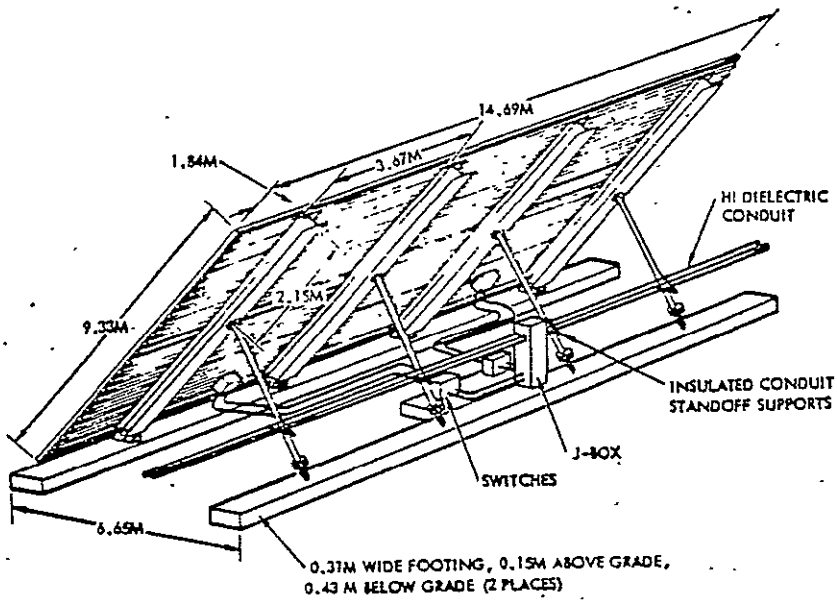


*Figure 3.2-8. Rectenna Panel Assembly and Installation*

The remaining structural elements; buildings, fencing, storage areas, etc., have not been considered at this time.

## Functional Elements and Block Diagrams

Functional requirements for the various operating modes are listed in Table 3.2-5. Since the structure subsystem is primarily passive no block diagrams are available.

*Table 3.2-5. Structural Subsystem - Operating Mode*

| MODE | ASSEMBLY | FUNCTION |
|---|---|---|
| CONSTRUCTION | SUBSYSTEM | WITHSTAND WINDLOAD TO 90 PSI |
| OPERATION | SUBSYSTEM | WITHSTAND WINDLOAD ≥ 90 PSI |
| ECLIPSE | SUBSYSTEM | N/A |
| FAILURE/ MAINTENANCE | SUBSYSTEM | WITHSTAND SYSTEM LOADS UNDER TBD FAILURE CONDITIONS |

## Major Assemblies

Figure 3.2-9 depicts the major structural subsystem elements.

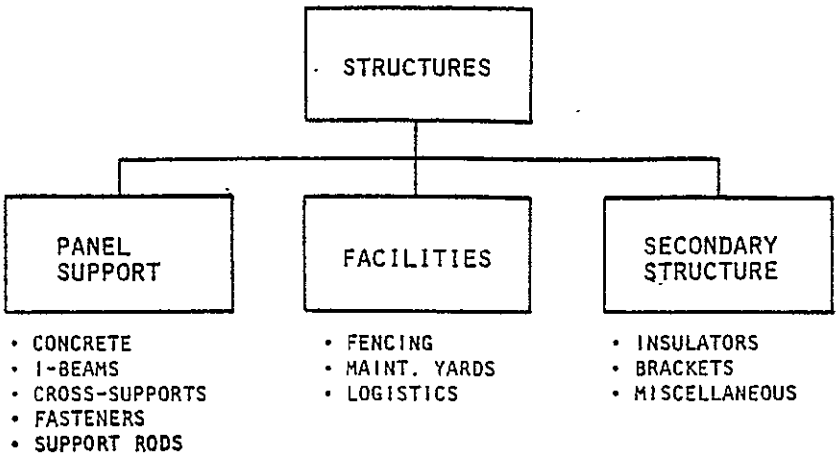


*Figure 3.2-9. Assembly Tree - Structures*

## Design Characteristics

The initial design for the panel structural and base support elements are illustrated in Figure 3.2-10.

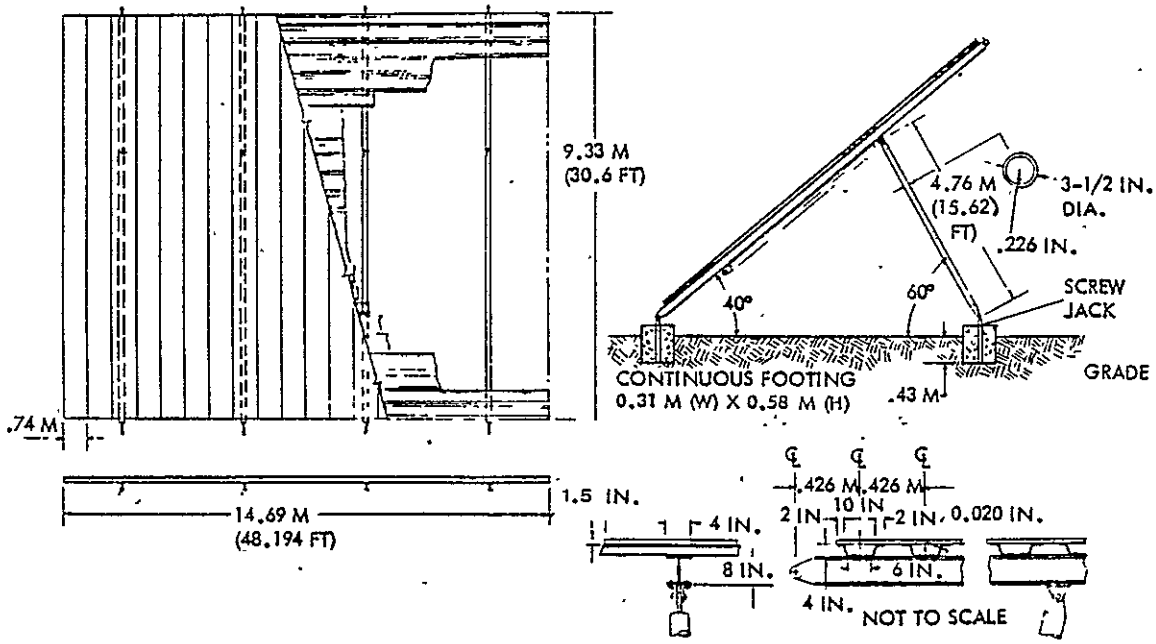


*Figure 3.2-10. Rectenna Array Support Structure*

## Subsystem Definition and Interfaces

Subsystem interfaces are shown in Figure 3.2-9 and 3.2-10.

### 3.2.4 CONVERTER STATIONS

The converter stations accept 40 kV dc power and output 500 kV ac or dc. The initial concept utilizes a solid-state inversion/step-up concept typified by an existing dc-ac conversion station located in Sylmar, California. The block diagram of the subsystem is shown in Figure 3.2-11.

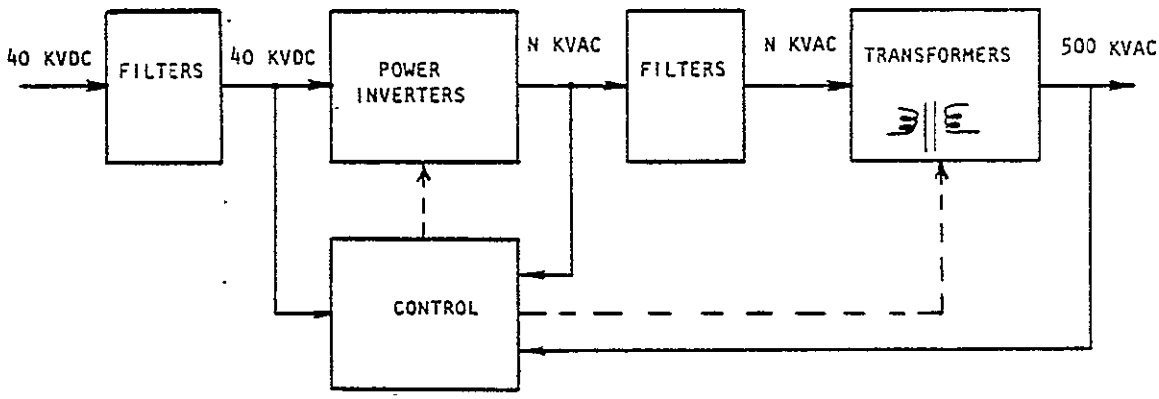


*Figure 3.2-11. Simplified Block Diagram - Converter Station*

Specific design details of this subsystem was not derived during the preceeding study and must await clarification in a future study effort.

### 3.2.5 DATA MANAGEMENT AND CONTROL

The data management and control hierarchy for the ground complex is outlined in Figure 3.2-12. The primary approach, pyramidal, is similar to that selected for the satellite. Similar, but not necessarily space qualified, devices would be used to implement the ground data system. A description of the various devices is given in Section 3.1.7.

Data on measurements and control are TBD.

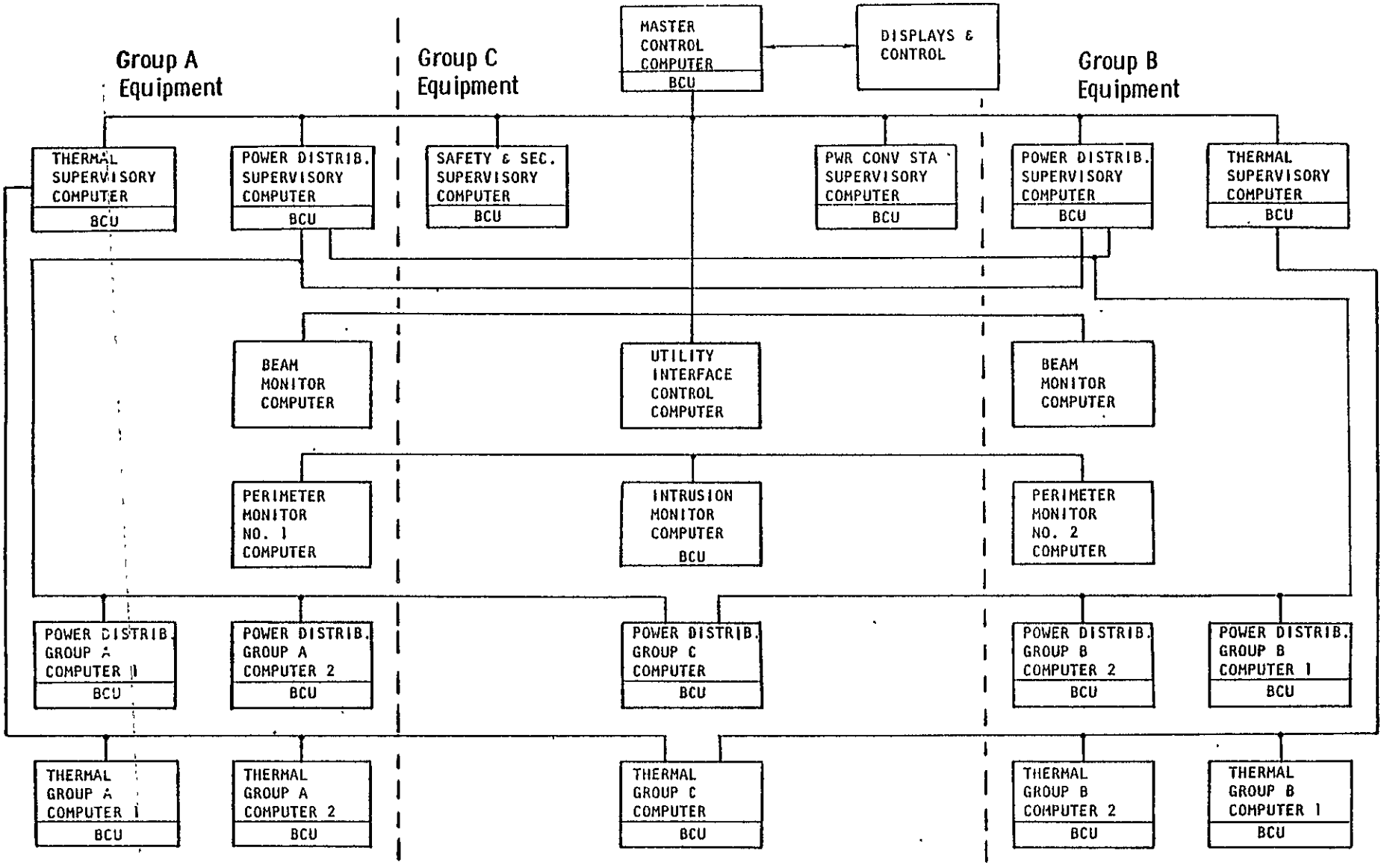


*Figure 3.2-12. IMCS Hierarchy - Ground Receiving Station*



Satellite Systems Division
Space Systems Group
Rockwell International

# 4.0 SUPPORT SYSTEMS

4.0 SUPPORT SYSTEMS

# 4.0 SUPPORT SYSTEMS

## 4.1 GEO OPERATIONAL BASE

(TBD)

## 4.2 MAINTENANCE AND REFURBISHMENT FACILITY

(TBD)

## 4.3 SPS TRANSPORTATION SYSTEM REQUIREMENTS

The SPS program will require a dedicated transportation system and, in all probability, a dedicated launch facility for vertical launch HLLV operations.

The major elements of the SPS transportation system consist of the following:

- Heavy-Lift Launch Vehicle (HLLV)—SPS cargo to LEO
- Personnel Launch Vehicle (PLV)—personnel to LEO (Growth STS)
- Electric Orbit Transfer Vehicle (EOTV)—SPS cargo to GEO
- Personnel Orbit Transfer Vehicle (POTV)—personnel, LEO to GEO
- Personnel module (PM)—personnel carrier, earth to LEO to GEO
- Intra-Orbit Transfer Vehicle (IOTV)—on-orbit cargo transfer

Two HLLV configurations are required—a two-stage vertical takeoff horizontal landing (VTO/HL) HLLV with a payload capability in the order of 225,000 kg for the operational program, and an interim Shuttle transportation system (STS) derived HLLV for precursor operations. The latter vehicle utilizes the same elements as the PLV except that the orbiter is replaced with a payload module and a recoverable engine module.

The PLV is used to transfer the SPS construction crew from earth to LEO. This vehicle is a growth Shuttle version in which the solid rocket booster (SRB) is replaced with a reusable liquid rocket booster (LRB). The PM is designed to fit within the existing orbiter cargo bay.

The EOTV is employed for cargo transfer from LEO to GEO, and utilizes the same power sources and construction techniques as the SPS. The configuration, payload capability, and trip time are established on the basis of overall SPS program compatibility.

The POTV is the propulsive element required to transfer the PM and its crew/passengers from LEO to GEO. The POTV is a single, chemical rocket stage and is sized to fit within the cargo bay and payload capability of the PLV.

The PM is capable of transporting a 60-man construction crew from earth to LEO to GEO and return. The PM is also sized to fit within the PLV payload envelope.

The IOTV, defined in concept only, is a chemical rocket stage, manned or remotely operated, and is capable of on-orbit transfer of approximately 225,000 kg of cargo over a distance of 10 km.

### 4.3.1 TRANSPORTATION SYSTEM SCENARIO

Transportation system LEO operations are depicted in Figure 4.3-1. STS derivatives are employed for crew transfer from earth to LEO. The STS-HLLV is employed early in the program for space base and precursor satellite construction and delivery of POTV propellants. This element of the operational transportation system is phased out of the program with initiation of first satellite construction, or sooner. The SPS HLLV delivers operational phase cargo and propellants to LEO, which are transferred to the EOTV by means of the IOTV for subsequent transfer to GEO.

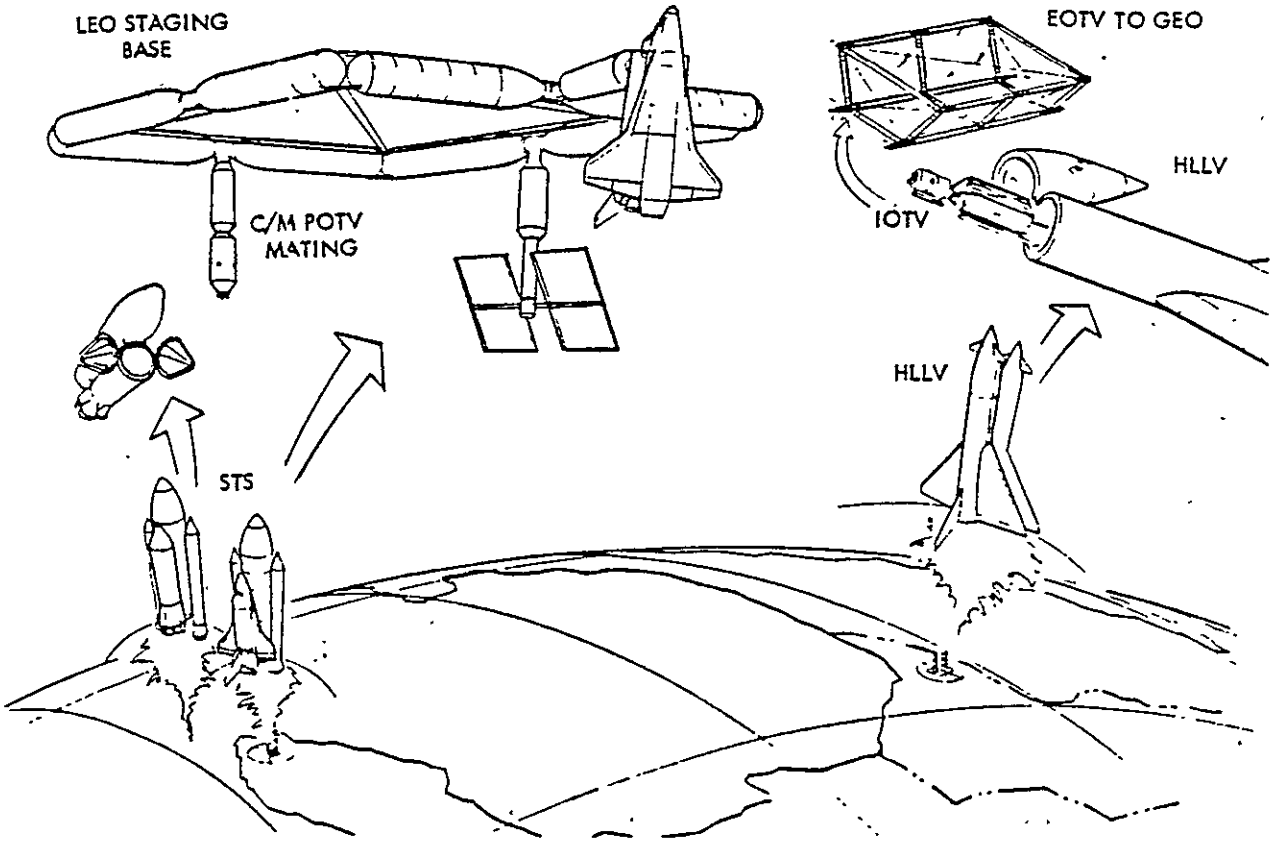


*Figure 4.3-1. SPS LEO Transportation Operations*

Transportation system GEO operations are depicted in Figure 4.3-2. Upon arrival at GEO, the SPS construction cargo is transferred from the EOTV to the SPS construction base by IOTV. The POTV with crew module docks to the construction base to effect crew transfer and POTV refueling for return flight to LEO. Crew consumables and resupply propellants are also transported to GEO by the EOTV.

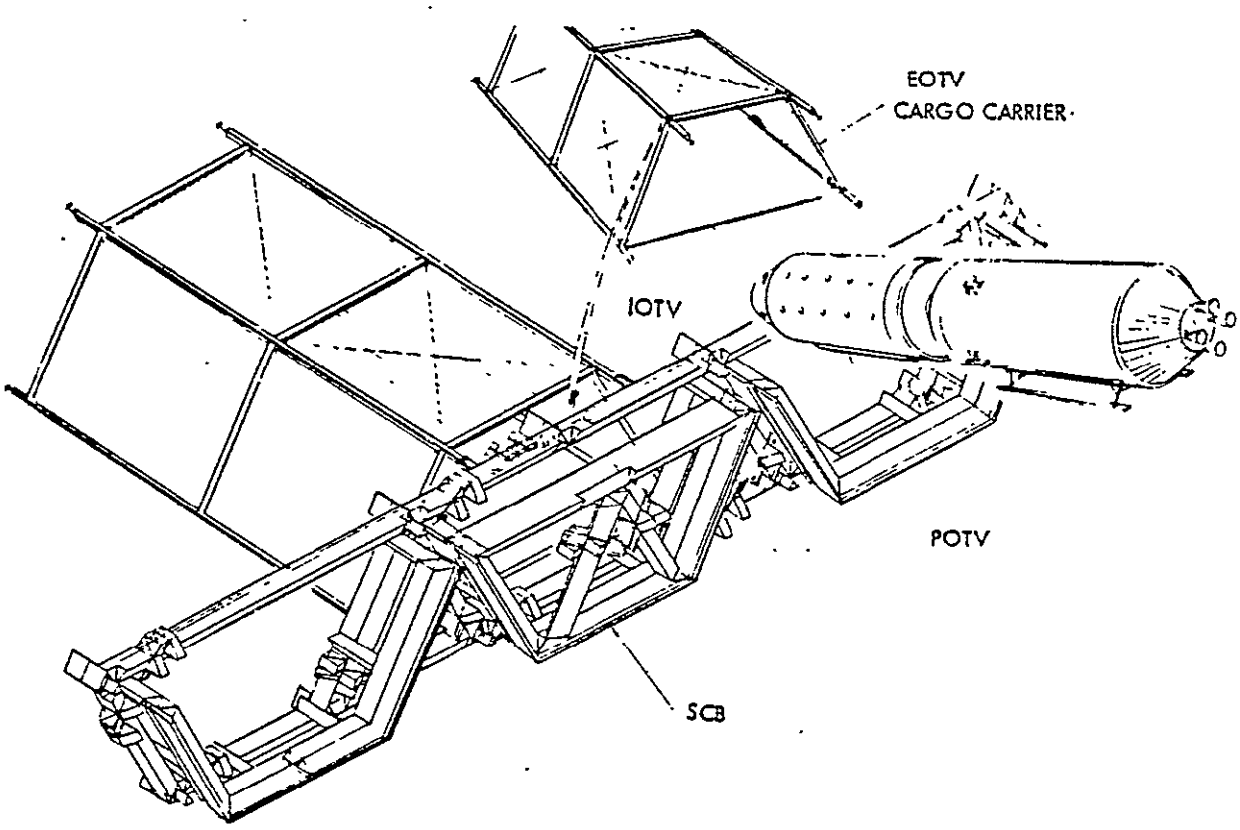


*Figure 4.3-2. SPS GEO Transportation Operations*

Transportation system requirements are dominated by the vast quantity of materials to be transported to LEO and GEO. Tables 4.3-1, 4.3-2, and 4.3-3 summarize the mass delivery requirements, and numbers of vehicle flights, for the baseline transportation elements. All mass figures include a 10% packaging factor. Table 4.3-1 summarizes transportation requirements for construction of the first satellite. Table 4.3-2 is a summary of requirements during the total satellite construction phase (i.e., the first 30 years). The average annual mass to LEO during this phase is in excess of 130 million kilograms with more than 750 HLLV launches per year. Table 4.3-3 presents a total program summary through retirement of the last satellite after 30 years of operation. Mass and flight requirements are separated between that required to construct the satellites and that required to operate and maintain the satellites.

*Table 4.3-1. TFU Transportation Requirements*

| | MASS x $10^6$ KG | | VEHICLE FLIGHTS | | | | | |
|---|---|---|---|---|---|---|---|---|
| | | | PLV | HLLV | POTV | EOTV | IOTV | |
| | LEO | GEO | | | | | LEO | GEO |
| SATELLITE CONST. MAINT. & PACKAGING | 37.12 | 37.12 | 45 | 163.5 | 45 | 6.5 | 164 | 164 |
| CREW CONSUMABLES & PKG. | 0.98 | 0.94 | - | 4.3 | - | 0.2 | 4 | 4 |
| POTV PROPELLANTS & PKG. | 2.91 | 1.46 | - | 12.8 | - | 0.3 | 13 | 6 |
| EOTV CONST., MAINT. & PKG. | 7.20 | - | 15 | 31.7 | - | - | 32 | - |
| EOTV PROPELLANTS & PKG. | 4.79 | - | - | 21.1 | - | - | 21 | - |
| IOTV PROPELLANTS & PKG. | 0.13 | 0.06 | - | 0.6 | - | - | 1 | - |
| | | | | | | | 235 | 174 |
| TOTAL | 53.13 | 39.58 | 60 | 234.0 | 45 | 7.0 | 409 | |
| | | | VEHICLE REQUIREMENTS | | | | | |
| TFU FLEET | | | 2 | 5 | 4 | 6 | 4 | |
| GROWTH SHUTTLE VEHICLES— PRECURSOR REQUIREMENTS: •LEO BASE •SPACE CONSTR. BASE •EOTV TEST VEHICLE | | | PERSONNEL (PLV) 72 FLIGHTS 1 VEHICLE | | | CARGO CARRIER/ENGINE MODULE AND LAUNCH VEH. 129 FLIGHTS 2 VEHICLES | | |

*Table 4.3-2. SPS Program Transportation Requirements, 30-Year Construction Phase*

| | MASS x $10^6$ KG | | VEHICLE FLIGHTS | | | | | |
|---|---|---|---|---|---|---|---|---|
| | | | PLV | HLLV | POTV | EOTV | IOTV | |
| | LEO | GEO | | | | | LEO | GEO |
| SATELLITE CONST. & MAINT. | 3,099.3 | 3,099.3 | 3187 | 13,653 | 3051 | 599.5 | 13,653 | 13,653 |
| CREW CONSUMABLES | 74.9 | 71.7 | - | 330 | - | 13.9 | 330 | 316 |
| POTV PROPELLANTS | 216.6 | 108.3 | - | 954 | - | 20.9 | 954 | 477 |
| EOTV CONST. & MAINTENANCE | 38.4 | 31.2 | - | 169 | - | 6.0 | 169 | 137 |
| EOTV PROPELLANT | 492.3 | 2.0 | - | 2,169 | - | 0.4 | 2,169 | 9 |
| IOTV PROPELLANT | 10.5 | 4.8 | - | 47 | - | 0.9 | 47 | 21 |
| | | | | | | | 17,322 | 14,613 |
| TOTAL | 3,932.0 | 3,317.3 | 3187 | 17,322 | 3051 | 642 | 31,935 | |
| VEHICLE FLIGHT LIFE | - | - | 100 | 300 | 100 | 20 | 200 | |
| VEHICLE FLEET REQUIREMENTS | - | - | 32 | 58 | 31 | 32 | 160 | |

*Table 4.3-3. Total Transportation Requirements, 60-Year Program*

| | MASS x $10^6$ KG | | VEHICLE FLIGHTS | | | | | |
|---|---|---|---|---|---|---|---|---|
| | | | PLV | HLLV | POTV | EOTV | IOTV | |
| | LEO | GEO | | | | | LEO | GEO |
| SATELLITE | | | | | | | | |
| CONSTRUCTION | 2197.8 | 2197.8 | 1340 | 9682 | 1220 | 425.1 | 9682 | 9682 |
| OPERATIONS & MAINTENANCE | 1803.0 | 1803.0 | 3694 | 7943 | 3660 | 348.7 | 7943 | 7943 |
| CREW CONSUMABLES | | | | | | | | |
| CONSTRUCTION | 31.5 | 28.7 | – | 139 | – | 5.6 | 139 | 126 |
| OPERATIONS & MAINTENANCE | 86.8 | 86.0 | – | 382 | – | 16.6 | 382 | 379 |
| POTV PROPELLANTS | | | | | | | | |
| CONSTRUCTION | 82.7 | 41.4 | – | 364 | – | 8.0 | 364 | 182 |
| OPERATIONS & MAINTENANCE | 267.8 | 133.8 | – | 1180 | – | 25.9 | 1180 | 589 |
| EOTV CONSTRUCTION | | | | | | | | |
| CONSTRUCTION | 28.2 | 24.2 | – | 124 | – | 4.7 | 124 | 107 |
| OPERATIONS & MAINTENANCE | 22.2 | 19.0 | – | 98 | – | 3.7 | 98 | 84 |
| EOTV PROPELLANTS | | | | | | | | |
| CONSTRUCTION | 340.3 | 2.0 | – | 1499 | – | 0.4 | 1499 | 9 |
| OPERATIONS & MAINTENANCE | 304.0 | – | – | 1339 | – | – | 1339 | – |
| IOTV PROPELLANTS | | | | | | | | |
| CONSTRUCTION | 7.2 | 3.3 | – | 32 | – | 0.6 | 32 | 15 |
| OPERATIONS & MAINTENANCE | 6.6 | 3.0 | – | 29 | – | 0.6 | 29 | 13 |
| SUMMARY | | | | | | | | |
| CONSTRUCTION | 2687.7 | 2297.4 | 1340 | 11,840 | 1220 | 444 | 11,840 | 10,121 |
| OPERATIONS & MAINTENANCE | 2490.4 | 2044.8 | 3694 | 10,971 | 3660 | 396 | 10,971 | 9,008 |
| TOTAL | 5178.1 | 4342.2 | 5034 | 22,811 | 4880 | 840 | 22,811 | 19,129 |
| VEHICLE FLEET | | | | | | | | |
| CONSTRUCTION | – | – | 14 | 39 | 12 | 22 | 110 | |
| OPERATIONS & MAINTENANCE | – | – | 37 | 37 | 37 | 20 | 100 | |
| TOTAL | – | – | 51 | 76 | 49 | 42 | 210 | |

### 4.3.2 HEAVY-LIFT LAUNCH VEHICLE (HLLV)

The primary driver in establishing HLLV requirements is the construction mass to orbit. Other factors include propellant cost/availability and environmental suitability. As stated previously, an interim STS-derived HLLV will be required to satisfy SPS precursor operations (schedule limited) and, because of its similarity to the PLV, will be defined along with that vehicle. Basic HLLV requirements are summarized in Table 4.3-4.

*Table 4.3-4. HLLV Sizing—Ground Rules/Assumptions*

- TWO-STAGE VERTICAL TAKEOFF/HORIZONTAL LANDING (VTO/HL)
- FLY BACK CAPABILITY BOTH STAGES - ABES FIRST STAGE ONLY
- PARALLEL BURN WITH PROPELLANT CROSSFEED
- LOX/RP FIRST STAGE - LOX/$LH_2$ SECOND STAGE
- HI $P_c$ GAS GENERATOR CYCLE ENGINE - FIRST STAGE [$I_s$ (VAC) = 352 SEC.]
- HI $P_c$ STAGED COMBUSTION ENGINE - SECOND STAGE [$I_s$ (VAC) = 466 SEC.]
- STAGING VELOCITY - HEAT SINK BOOSTER COMPATIBLE
- CIRCA 1990 TECHNOLOGY BASE - BAC/MMC WEIGHT REDUCTION DATA
- ORBITAL PARAMETERS - 487 KM @ 31.6°
- PAYLOAD CAPABILITY - 227 x $10^3$ KG UP/45 KG DOWN
- THRUST/WEIGHT - 1.30 LIFTOFF/3.0 MAX
- 15% WEIGHT GROWTH ALLOWANCE/0.75% ΔV MARGIN

The HLLV utilizes a parallel burn mode with propellant cross-feed from the first-stage tanks to the second-stage engines. The first stage employs high chamber pressure gas generator cycle LOX/RP fueled engines with $LH_2$ cooling and the second stage employs a staged combustion engine similar to the Space Shuttle main engine (SSME) which is LOX/$LH_2$ fueled.

The HLLV configuration is shown in Figure 4.3-3 in the launch configuration. Both stages have common body diameter, wing and vertical stabilizer; however, the overall length of the second stage (orbiter) is approximately 5 m greater than the first stage (booster). The vehicle gross liftoff weight (GLOW) is 15,730,000 lb with a payload capability of 510,000 lb to the reference earth orbit. A summary weight statement is given in Table 4.3-5. The propellant weights indicated are total loaded propellant (i.e., not usable). The second-stage weight (ULOW) includes the payload weight. During the booster ascent phase, the second-stage LOX/$LH_2$ propellants are crossfed from the booster to achieve the parallel burn mode. Approximately 1.6 million pounds of propellant are crossfed from the booster to the orbiter during ascent.

The HLLV booster is shown in the landing configuration in Figure 4.3-4. The vehicle is approximately 300 feet in length with a wing span of 184 feet and a maximum clearance height of 116 feet. The nominal body diameter is 40 feet. The vehicle has a dry weight of 1,045,500 lb. Seven rocket engines are mounted in the aft fuselage with a nominal seal-level thrust of 2.3 million pounds each. Eight turbojet engines are mounted on the upper portion of the aft fuselage with a nominal thrust of 20,000 lb each. A detailed weight statement is given in Table 4.3-6; the vehicle propellant weight summary is projected in Table 4.3-7.

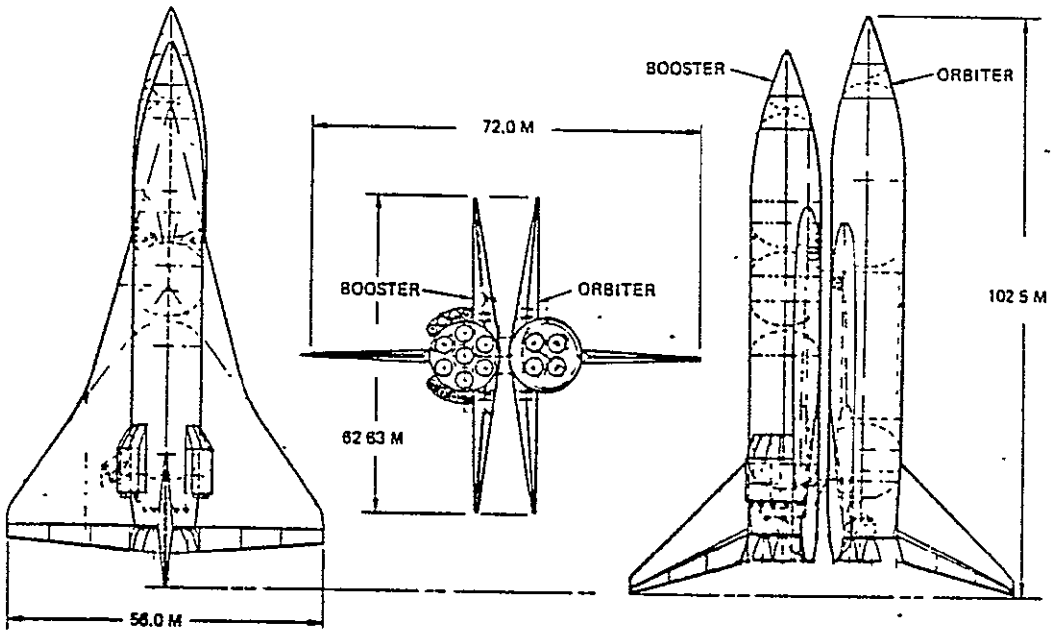


*Figure 4.3-3. Reference HLLV Launch Configuration*

*Table 4.3-5. HLLV Mass Properties ($\times 10^6$)*

| | kg | lb |
|---|---|---|
| GLOW | 7.14 | 15.73 |
| BLOW | 4.92 | 10.84 |
| $W_{P2}$ | 4.49 | 9.89 |
| ULOW | 2.22 | 4.89 |
| $W_{P2}$ | 1.66 | 3.65 |
| Payload | 0.23 | 0.51 |

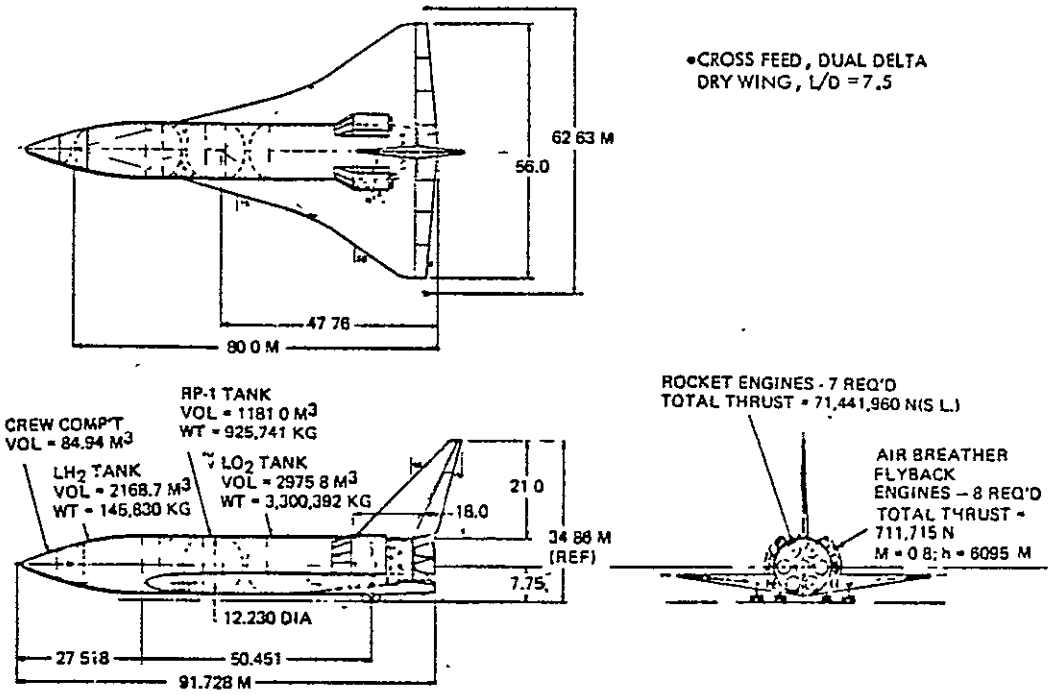


*Figure 4.3-4. HLLV First Stage (Booster) - Landing Configuration*

*Table 4.3-6. HLLV Weight Statement*
*kg×10⁻³ (lb×10⁻³)*

| SUBSYSTEM | 2ND STAGE | 1ST STAGE |
|---|---|---|
| FUSELAGE | 103.41 (227.98) | 130.73 (288.22) |
| WING | 39.20 ( 86.41) | 78.17 (172.34) |
| VERTICAL TAIL | 5.70 ( 12.57) | 7.21 ( 15.89) |
| CANARD | 1.39 ( 3.07) | 2.21 ( 4.87) |
| TPS | 52.59 (115.94) | - |
| CREW COMPARTMENT | 12.70 ( 28.00) | ** |
| AVIONICS | 3.86 ( 8.50) | 3.40 ( 7.50) |
| PERSONNEL | 1.36 ( 3.00) | ** |
| ENVIRONMENTAL | 2.59 ( 5.70) | ** |
| PRIME POWER | 5.44 ( 12.00) | ** |
| HYDRAULIC SYSTEM | 3.86 ( 8.50) | ** |
| ASCENT ENGINES | 26.93 ( 59.38) | 67.45 (148.70) |
| RCS SYSTEM | 9.59 ( 21.15) | ** |
| LANDING GEARS | 18.38 ( 40.51) | ** |
| PROPULSION SYSTEMS | * | 44.99 ( 99.18) |
| ATTACH AND SEPARATION | - | 4.59 ( 10.12) |
| APU | - | 0.91 ( 2.00) |
| FLYBACK ENGINES | - | 28.55 ( 62.95) |
| FLYBACK PROPULSION SYSTEM | - | 18.39 ( 40.54) |
| SUBSYSTEMS | - | 25.76 ( 56.80) |
| DRY WEIGHT | 286.99 (632.71) | (909.12) |
| GROWTH MARGIN (15%) | 43.05 ( 94.91) | (136.37) |
| TOTAL INERT WT. | 330.04 (727.62) | (1045.49) |

*INCLUDED IN FUSELAGE WEIGHT
**ITEMS INCLUDED IN SUBSYSTEMS

*Table 4.3-7. HLLV Propellant Weight Summary ($\times 10^6$)*

| | FIRST STAGE | | SECOND STAGE | |
|---|---|---|---|---|
| | LB | KG | LB | KG |
| USABLE | 9.607 | 4.358 | 3.481 | 1.579 |
| CROSSFEED | 1.612 | 0.732 | (1.612) | (0.731) |
| TOTAL BURNED | 7.995 | 3.626 | 5.093 | 2.310 |
| RESIDUALS | 0.040 | 0.018 | 0.020 | 0.009 |
| RESERVES | 0.045 | 0.020 | 0.024 | 0.011 |
| RCS | 0.010 | 0.005 | 0.018 | 0.008 |
| ON-ORBIT | - | - | 0.095 | 0.043 |
| BOIL-OFF | - | - | 0.010 | 0.005 |
| FLY-BACK | 0.187 | 0.085 | - | - |
| TOTAL LOADED | 9.889 | 4.486 | 3.648 | 1.655 |

The HLLV orbiter is depicted in Figure 4.3-5. The vehicle is approximately 317 feet in length with the same wing span, vertical height, and nominal body diameter as the booster. The orbiter employs four rocket engines with a nominal sea-level thrust of 1.19 million pounds each. The orbiter makes an upowered reentry and landing.

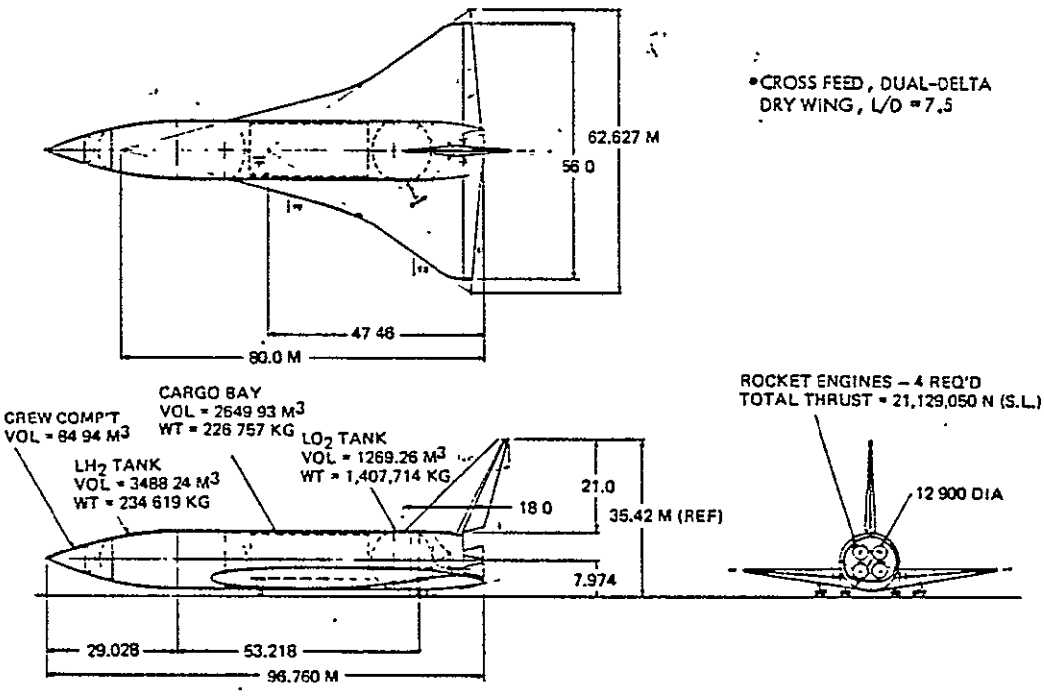


*Figure 4.3-5. HLLV Second Stage (Orbiter) —Landing Configuration*

The cargo bay is located in the mid-fuselage and has a length of approximately 90 feet. The detailed weight statement and a propellent summary for the orbiter are included in Tables 4.3-6 and 4.3-7, respectively.

The vehicle relative staging velocity is 2127 m/sec (6978 ft/sec) at an altitude of 55.15 km (181,000 ft) and a first-stage burnout range of 88.7 km (48.5 nmi). The first-stage flyback range is 387 km (211.8 nmi).

### 4.3.3 ELECTRIC ORBITAL TRANSFER VEHICLE (EOTV)

The EOTV depicted in Figure 4.3-6 is based upon a rigid design which can accommodate two "standard" solar blanket areas of 600 m by 750 m from the MSFC/Rockwell baseline satellite concept. The commonality of the structural configuration and construction processes with the satellite design is noted. Since the thrust levels will be very low (as compared to chemical stages), the engines and power processing units are mounted in four arrays at the lower corners of the structure/solar array. Each array contains 36 thrusters; however, only 64 thrusters are required to fire simultaneously. The additional thrusters provide redundancy when one or more arrays cannot be operated due to plume impingement on the solar array. Up to 16 thrusters, utilizing stored electrical power, are used for attitude hold only during periods of occultation. The attitude determination system is the same as the SPS, mounted at the extremities of the six vertical beams. Payload attach platforms are located so that loading/unloading operations can be conducted from "outside" the lightweight structure.

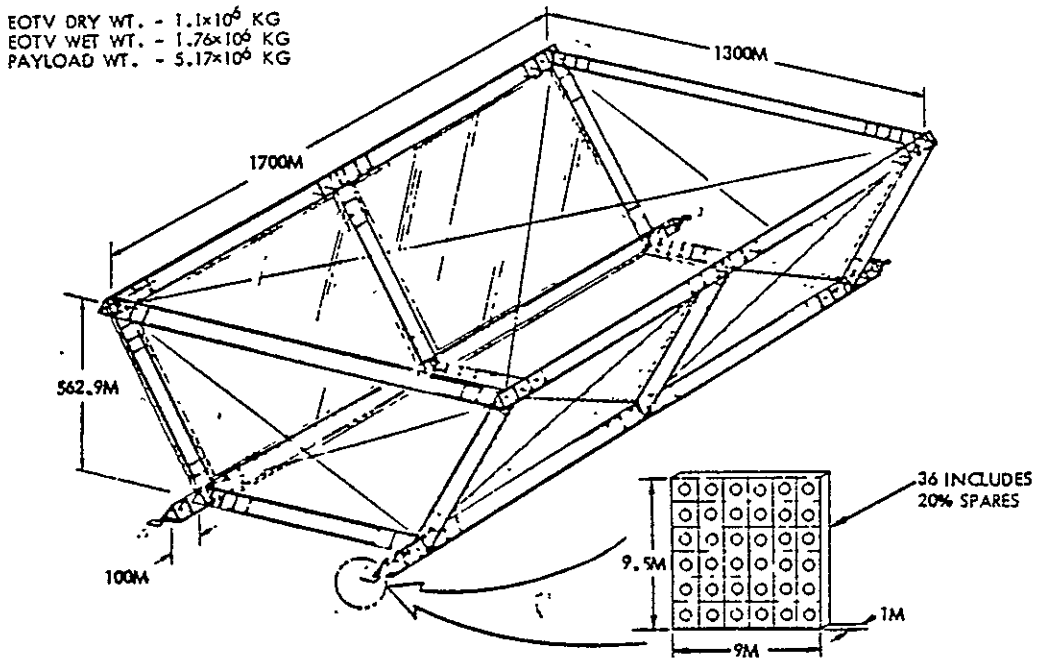


*Figure 4.3-6. Selected EOTV Configuration*

Primary EOTV requirements are summarized in Table 4.3-8. The orbital parameters are consistent with SPS requirements and the delta-V requirement is taken from previous SEP and EOTV trajectory calculations. A 0.75% delta-V margin is included in the figure given.

*Table 4.3-8. EOTV Sizing Requirements*

- LEO ALTITUDE - 487 KM @ 31.6° INCLINATION
- SOLAR INERTIAL ORIENTATION
- LAUNCH ANY TIME OF YEAR
- 5700 M/SEC ΔV REQUIREMENT
- SOLAR INERTIAL ATTITUDE HOLD ONLY DURING OCCULTATION PERIODS
- 50° PLUME CLEARANCE
- NUMBER OF THRUSTERS - MINIMIZE
- 20% SPARE THRUSTERS - FAILURES/THRUST DIFFERENTIAL
- PERFORMANCE LOSSES DURING THRUSTING - 5%
- ACS POWER REQUIREMENT - MAXIMUM OCCULTATION PERIOD
- ACS PROPELLANT REQUIREMENTS - 100% DUTY CYCLE
- 25% WEIGHT GROWTH ALLOWANCE

The solar array has a total power output of 33.5 megawatts. Line losses of 6% and an end-of-life cell degradation of 15% yield a net power to the thruster arrays of 268.1 megawatts. The power storage system is sized on the same basis as the SPS, 200 kilowatt-hours per kilogram weight.

The GaAlAs cells are assumed to be self-annealing of electron damage occurring during transit through the Van Allen belt. A lifetime degradation in performance of 15% is consistent with basic SPS criteria.

EOTV thruster characteristics are summarized in Table 4.3-9.

*Table 4.3-9. EOTV Thruster Characteristics*

- MAXIMUM OPERATING TEMPERATURE - 1900° K
- TOTAL VOLTAGE - 8300 VOLTS
- GRID VOLTAGE - 2000 VOLTS MAXIMUM
- BEAM CURRENT - 1887 AMP
- SPECIFIC IMPULSE - 8213 SEC
- THRUSTER DIAMETER - 76 CM
- THRUST/THRUSTER - 69.7 NEWTON
- NUMBER OF THRUSTERS - 144 (INCLUDES 25% SPARES)
- MAXIMUM OF 64 THRUSTERS OPERABLE SIMULTANEOUSLY

The EOTV weight and performance summary is presented in Table 4.3-10. The transfer propellant weight of 666,660 kg is the maximum that can be consumed by the thrusters during the transit time of 1290 days up (100 days thrusting) and the resulting return trip time of approximately 30 days (22 days thrusting).

*Table 4.3-10. EOTV Weight/Performance Summary (kg)*

| | | |
|---|---|---|
| SOLAR ARRAY | | 588,196 |
| CELLS/STRUCTURE | 299,756 | |
| POWER CONDITIONING | 288,440 | |
| THRUSTER ARRAY (4) | | 96,685 |
| THRUSTERS/STRUCTURE | 10,979 | |
| CONDUCTORS | 4,607 | |
| BEAMS/GIMBALS | 2,256 | |
| PROPELLANT TANKS | 78,843 | |
| ATTITUDE CONTROL SYSTEM | | 186,872 |
| POWER SUPPLY | 184,882 | |
| SYSTEM COMPONENTS | 274 | |
| PROPELLANT TANKS | 1,716 | |
| EOTV INERT WEIGHT | | 871,753 |
| 25% GROWTH | | 217,938 |
| TOTAL INERT WEIGHT | | 1,089,691 |
| PROPELLANT WEIGHT | | 666,660 |
| TRANSFER PROPELLANT | 655,219 | |
| ACS PROPELLANT | 11,441 | |
| EOTV LOADED WEIGHT | | 1,756,351 |
| PAYLOAD WEIGHT | | 5,171,318 |
| LEO DEPARTURE WEIGHT | | 6,927,669 |
| PROPELLANT COST DELIVERED ($/KG P/L) | | 4.72 |

The EOTV dry weight (including growth) is approximately 1.09 10 kg and has a payload delivery capability to GEO of $5.17\times10^6$ kg with a 10% return payload capability to LEO.

The estimated cost of $4.72/kg-payload reflects propellant costs only delivered to LEO.

### 4.3.4 PERSONNEL TRANSFER VEHICLE (PTV)/STS-DERIVED HLLV

The PLV and STS-derived HLLV are growth versions of the Shuttle transportation system (STS). The growth version of the PLV, Figure 4.3-7, is achieved by replacing the existing recoverable solid rocket boosters (SRB) with a pair of recoverable liquid rocket boosters (LRB). The existing orbiter and external tank are used in their current configuration. The added performance afforded by the LRB increases the orbiter payload capability to the reference STS orbit by approximately 54%, or a total capability of 45,350 kg (100,000 lb).

The STS-HLLV (Figure 4.3-8), employed in the precursor phase of SPS, is derived by replacing the STS orbiter on the PLV with a payload module and a reusable propulsion and avionics module (PAM) to provide the required orbiter functions. The PAM may be recovered ballistically or, preferably, as a down payload for the PLV. These modifications yield an STS-HLLV with a payload capability of approximately 100,000 kg.

The LRB has a gross weight of 395,000 kg, made up of 324,000 kg of propellant (278,000 kg of $LO_2$ and 46,000 kg of $LH_2$), and 71,000 kg of inert weight. The overall length of the LRB is 47.55 meters with a nominal diameter of 6.1 meters.

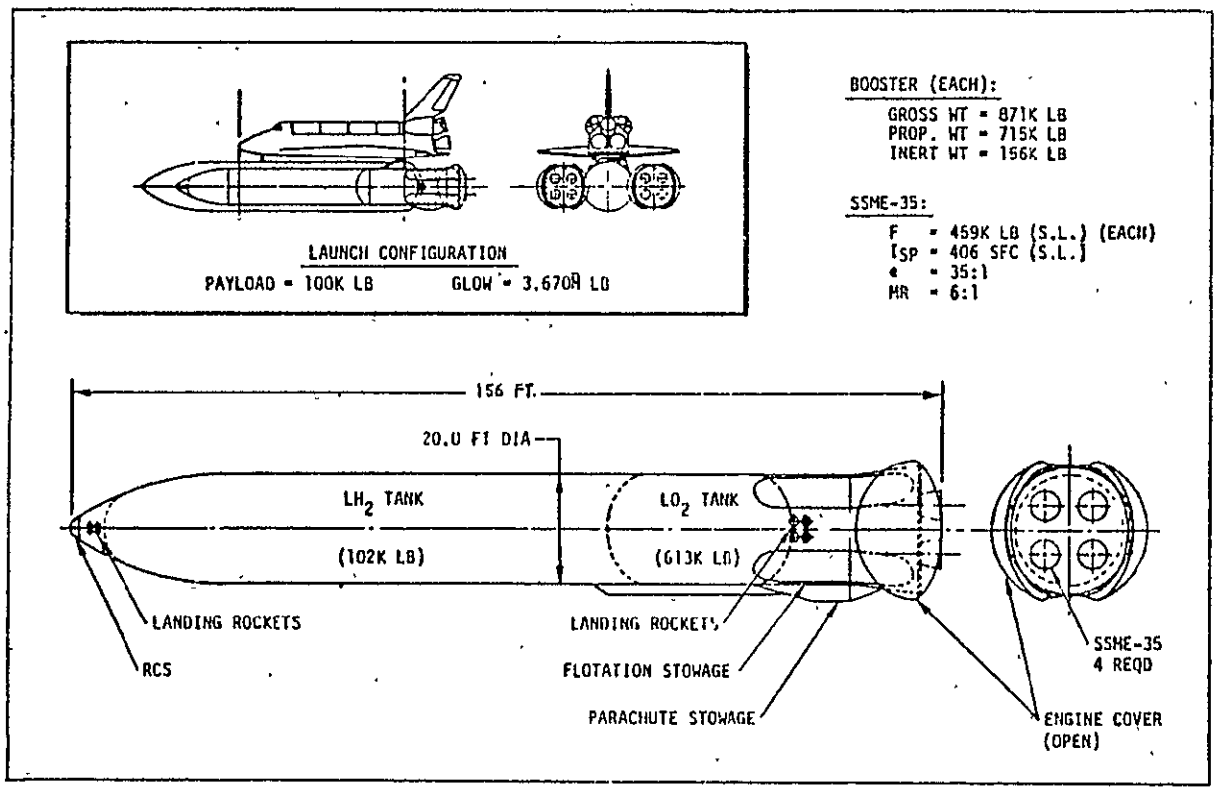


*Figure 4.3-7. $LO_2/LH_2$ SSME Integral Twin Ballistic Booster*

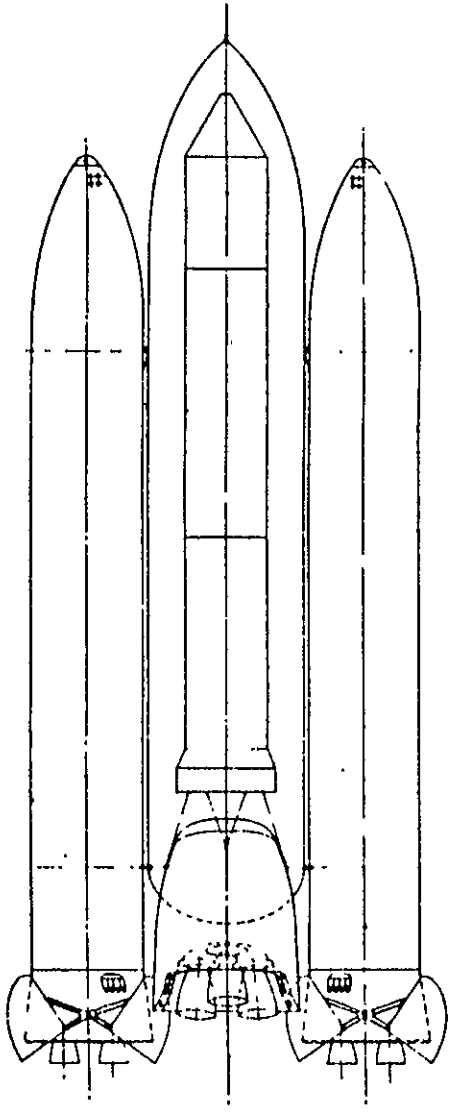

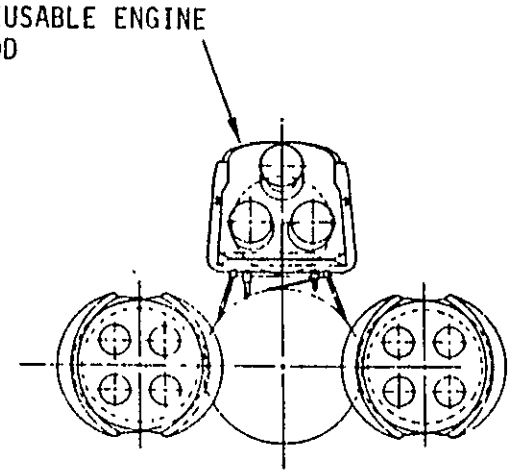


| LIFTOFF WEIGHTS ($10^3$ kg) | |
|---|---|
| PAYLOAD | 100.0 |
| EXTENAL TANK | 738.3 |
| LRB (2) | 790.0 |
| REUSABLE POD | 13.7 |
| TOTAL | 1642.0 |

*Figure 4.3-8. STS HLLV Configuration*

The LRB utilizes a derivative of the Space Shuttle main engine (SSME). The only difference between the LRB engines and the SSME is in nozzle expansion ratio, 35 in lieu of 77.5 to 1. The SSME-35 and its characteristics are depicted in Figure 4.3-9.

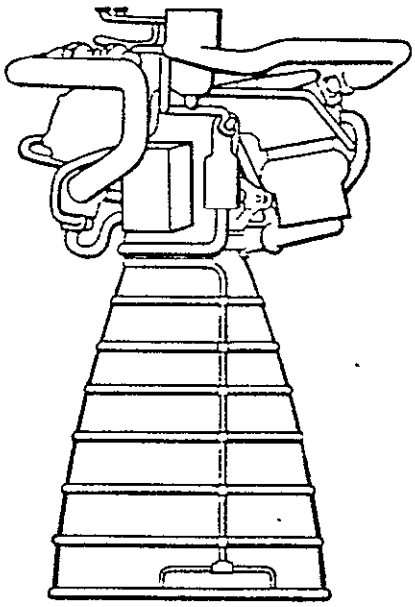

| | |
|---|---|
| THRUST, LBF | 459,000 (S.L.)<br>503,000 (VAC.) |
| EXPANSION AREA RATIO | 35:1 |
| CHAMBER PRESSURE, PSIA | 3230 |
| MIXTURE RATIO | 6.0:1 |
| SPECIFIC IMPULSE, SECONDS | 406 (S.L.)<br>445 (VAC.) |
| ENGINE WEIGHT, LBF | 6340 |
| SERVICE LIFE, HOURS | 75 |
| STARTS | 55 |
| ENVELOPE: LENGTH, INCHES | 146 |
| DIAMETER, INCHES | |
| POWERHEAD | 105 |
| NOZZLE EXIT | 63 |

*Figure 4.3-9. Liquid Rocket Booster Main Engine (SSME-35)*

4.3.5 PERSONNEL ORBITAL TRANSFER VEHICLE (POTV)

The POTV is the propulsive element used to transfer the personnel module (PM) from LEO to GEO and return. The POTV concept uses a single stage to transport the PM and its crew and passengers to GEO. After initial delivery of the POTV to LEO by the STS or SPS-HLLV, the propulsive stage is subsequently refueled in LEO (at the LEO station) with sufficient propellants to execute the transfer of the PM to GEO. At GEO, the stage is refueled for a return trip of crew and passengers to LEO. The HLLV delivers crew consumables and POTV propellants to LEO and the EOTV delivers the same items required in GEO. The PM with crew/personnel is delivered to LEO by the PLV.

The POTV configuration is shown in Figure 4.3-10, and a weight summary is given in Table 4.3-11.

The POTV utilizes two advanced space engines whose characteristics are given in Figure 4.3-11 and Table 4.3-12.

Since the POTV concept utilizes an on-orbit maintenance/refueling approach, an on-board system capable of identifying/correcting potential subsystem problems in order to minimize/eliminate on-orbit checkout operations is required.

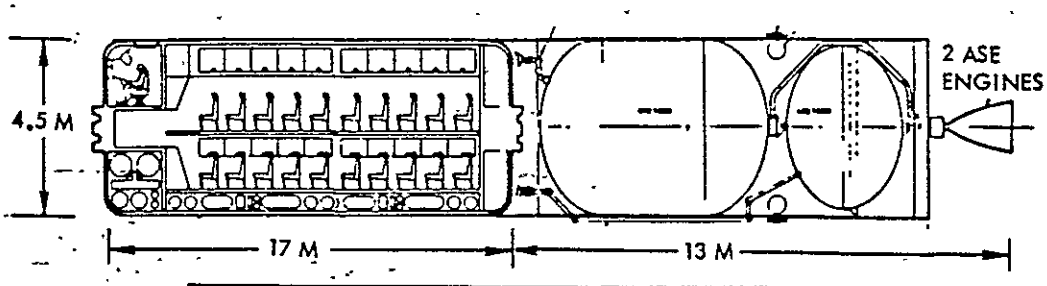


- 60 MAN CREW MODULE — 18,000 KG
- SINGLE STAGE OTV (GEO REFUELING) — 36,000 KG
- BOTH ELEMENTS CAPABLE OF GROWTH STS LAUNCH

*Figure 4.3-10. POTV Configuration*

*Table 4.3-11. POTV Weight Summary*

| Subsystem | Weight (kg) |
|---|---|
| Tank (5) | 1,620 |
| Structures and lines | 702 |
| Docking ring | 100 |
| Engine (2) | 490 |
| Attitude control | 235 |
| Other | 262 |
| Subtotal | 3,409 |
| Growth (10%) | 341 |
| Total inert | 3,750 |
| Propellant | 32,750 |
| Total loaded | 36,000 |

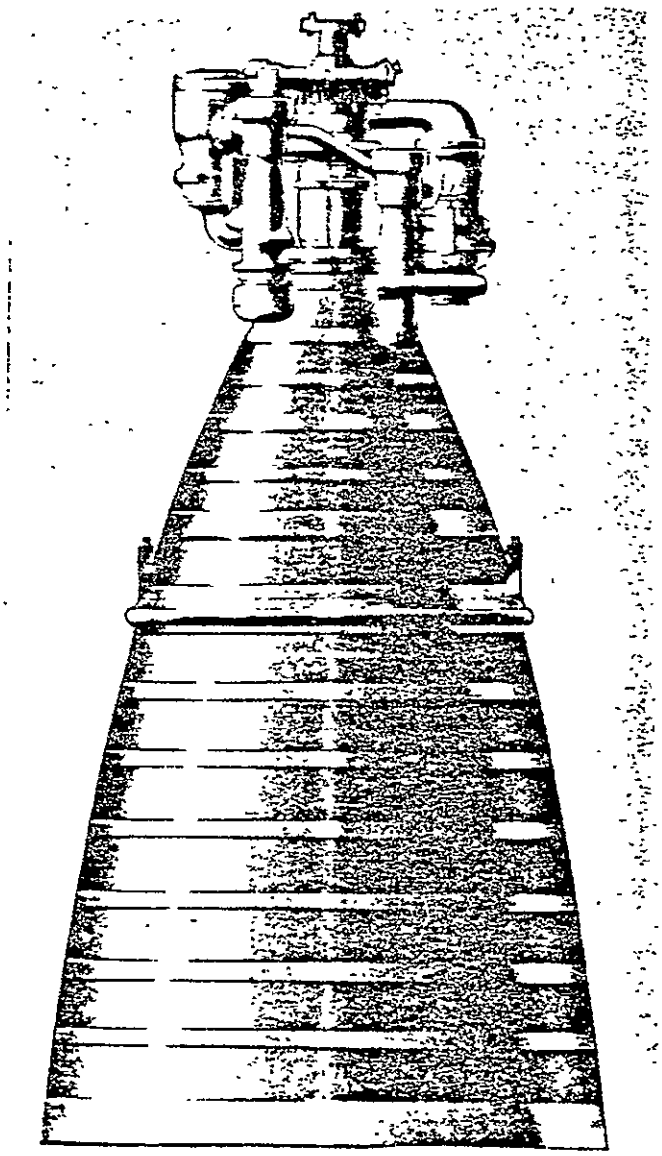

| | |
|---|---|
| THRUST (LB) | 20,000 |
| CHAMBER PRESSURE (PSIA) | 2000 |
| EXPANSION RATIO | 400 |
| MIXTURE RATIO | 6.0 |
| SPECIFIC IMPULSE (SEC) | 473.0 |
| DIAMETER (IN.) | 48.5 |
| LENGTH (IN.) | |
| NOZZLE RETRACTED | 50.5 |
| NOZZLE EXTENDED | 94.0 |

*Figure 4.3-11. Advanced Space Engine*

*Table 4.3-12. Current ASE Engine Weight*

| | |
|---|---|
| Fuel boost and main pumps | 74.5 |
| Oxidizer boost and main pumps | 89.8 |
| Preburner | 12.4 |
| Ducting | 25.0 |
| Combustion chamber assembly | 62.8 |
| Regen. cooled nozzle ($\varepsilon$ = 175:1) | 58.4 |
| Extendable nozzle and actuators ($\varepsilon$ = 400:1) | 122.0 |
| Ignition system | 6.1 |
| Controls, valves, and actuators | 74.0 |
| Heat exchanger | 14.0 |
| Total (lb)* | 539.0 |

*Based on major component current measured weights.

### 4.3.6 PERSONNEL MODULE (PM)

A construction sequence has been developed which requires a crew rotation every 90 days for crew complements in multiples of 60. The PM is synthesized on this basis. A limitation on PM size is established to assure compatibility with the PLV cargo bay dimensions and payload weight capacity (i.e., 4.5 m 17 m and 45,000 kg).

The PM shown in Figure 4.3-10 assumes a command station to monitor and control POTV/PM functions during flight. This function is provided in the forward section of the PM as shown. Spacing and layout of the PM is comparable to current commercial airline practice. Seating is provided on the basis of one meter, front to rear, and a width of 0.72 meter. PM mass was established on the basis of 110 kg/man (including personal effects) and approximately 190 kg/man for module mass. The PM design has provisions for 60 passengers and two flight crew members.

### 4.3.7 INTRA-ORBIT TRANSFER VEHICLE (IOTV)

On-orbit mobility systems are syntehsized in terms of application and concept only. On-orbit elements considered here are powered by a chemical (LOX/LH ) propulsion system. At least three distinct applications have been identified: (1) the need to transfer cargo from the HLLV to the EOTV in LEO, and from the EOTV to the SPS construction base in GEO; (2) the need to move materials about the SPS construction base; and (3) the probable need to move men or materials between operational SPS's. A "free-flyer" teleoperator concept is assumed.

Sizing of the IOTV is based on a minimum safe separation distance between EOTV and the SPS base of 10 km. The assumed transfer time is in the order of two hours (round trip), which equates to a $\Delta V$ requirement on the order of 3 to 5 m/sec. A single advanced space engine (ASE) is employed with a specific impulse of 473 sec (see Section 4.3.5 for complete engine description). The pertinent IOTV parameters are summarized in Table 4.3-13.

*Table 4.3-13. IOTV Weight Summary*

| SUBSYSTEM | WEIGHT (kg) |
|---|---|
| ENGINE (1 ASE) | 245 |
| PROPELLANT TANKS | 15 |
| STRUCTURE AND LINES | 15 |
| DOCKING RING | 100 |
| ATTITUDE CONTROL | 50 |
| OTHER | 100 |
| SUBTOTAL | 525 |
| GROWTH (10%) | 53 |
| TOTAL INERT | 578 |
| PROPELLANT | 300 |
| TOTAL LOADED | 878 |

## 4.4 LEO OPERATIONAL BASE

(TBD)

## 4.5 CARGO AND PERSONNEL LAUNCH AND RECOVERY FACILITIES

(TBD)

## 4.6 BASE SUPPORT FACILITIES

(TBD)

## 4.7 LOGISTIC FACILITIES

(TBD)

## 4.8 SPS GROUND RECTENNA FACILITIES

(TBD)