3 1176 00154 5939

NASA CR-158,662

AEROSPACE REPORT NO
ATR-79(9553)-7

NASA CR-158,662

NASA-CR-158662
19790016401

Auroral Magnetosphere-Ionosphere Coupling: A Brief Topical Review

Prepared by Y. T. CHIU and MICHAEL SCHULZ
Space Sciences Laboratory
The Aerospace Corporation
and
J. M. CORNWALL
Department of Physics
University of California, Los Angeles

10 April 1979

LIBRARY COPY

JUN 14 1979

LANGLEY RESEARCH CENTER
LIBRARY, NASA
HAMPTON, VIRGINIA

Laboratory Operations
THE AEROSPACE CORPORATION

NF01296

LABORATORY OPERATIONS

The Laboratory Operations of The Aerospace Corporation is conducting experimental and theoretical investigations necessary for the evaluation and application of scientific advances to new military concepts and systems. Versatility and flexibility have been developed to a high degree by the laboratory personnel in dealing with the many problems encountered in the nation's rapidly developing space and missile systems. Expertise in the latest scientific developments is vital to the accomplishment of tasks related to these problems The laboratories that contribute to this research are

Aerophysics Laboratory. Launch and reentry aerodynamics, heat transfer, reentry physics, chemical kinetics, structural mechanics, flight dynamics, atmospheric pollution, and high-power gas lasers.

Chemistry and Physics Laboratory Atmospheric reactions and atmospheric optics, chemical reactions in polluted atmospheres, chemical reactions of excited species in rocket plumes, chemical thermodynamics, plasma and laser-induced reactions, laser chemistry, propulsion chemistry, space vacuum and radiation effects on materials, lubrication and surface phenomena, photosensitive materials and sensors, high precision laser ranging, and the application of physics and chemistry to problems of law enforcement and biomedicine

Electronics Research Laboratory. Electromagnetic theory, devices, and propagation phenomena, including plasma electromagnetics, quantum electronics, lasers, and electro-optics, communication sciences, applied electronics, semiconducting, superconducting, and crystal device physics, optical and acoustical imaging, atmospheric pollution, millimeter wave and far-infrared technology.

Materials Sciences Laboratory Development of new materials, metal matrix composites and new forms of carbon, test and evaluation of graphite and ceramics in reentry, spacecraft materials and electronic components in nuclear weapons environment, application of fracture mechanics to stress corrosion and fatigue-induced fractures in structural metals

Space Sciences Laboratory Atmospheric and ionospheric physics, radiation from the atmosphere, density and composition of the atmosphere, aurorae and airglow, magnetospheric physics, cosmic rays, generation and propagation of plasma waves in the magnetosphere, solar physics, studies of solar magnetic fields, space astronomy, x-ray astronomy, the effects of nuclear explosions, magnetic storms, and solar activity on the earth's atmosphere, ionosphere, and magnetosphere, the effects of optical, electromagnetic, and particulate radiations in space on space systems.

THE AEROSPACE CORPORATION
El Segundo, California

• • •

Aerospace Report No.
ATR-79(9553)-7

AURORAL MAGNETOSPHERE-IONOSPHERE COUPLING: A BRIEF TOPICAL REVIEW

Prepared by

Y. T. Chiu and Michael Schulz
Space Sciences Laboratory
The Aerospace Corporation
and
J. M. CORNWALL
Department of Physics
University of California, Los Angeles

10 April 1979

N79-24572 #

This Page Intentionally Left Blank

Report No.
ATR-79(9553)-7

AURORALMAGNETOSPHERE-IONOSPHERE
COUPLING: A BRIEF TOPICAL REVIEW

Prepared

Y. T. Chiu

Michael Schulz

Y. T. Chiu for J. M. Cornwall

J. M. Cornwall

Approved

F. A. Morse, Head
Atmospheric Sciences Department

J. B. Blake, Head
Space Particles and Fields
Department

G. A. Paulikas, Director
Space Sciences Laboratory

ACKNOWLEDGMENT

This work was partially supported by NASA under Grant No. NASW-3120 and partially by The Aerospace Corporation under its research support program.

ABSTRACT

Auroral arcs result from the acceleration and precipitation of magnetospheric plasma in narrow regions characterized by strong electric fields both perpendicular and parallel to the earth's magnetic field. The various mechanisms that have been proposed for the origin of such strong electric fields are not mutually exclusive. Indeed, they are often complementary. Such mechanisms include: 1) electrostatic double layers; 2) double reverse shocks; 3) anomalous resistivity; 4) magnetic mirroring of hot plasma; and 5) mapping of the magnetospheric-convection electric field through an auroral discontinuity. Observations have not yet identified from among these mechanisms the one that is primarily responsible for the formation of auroral arcs.

This Page Intentionally Left Blank

CONTENTS

ABSTRACT iii

ACKNOWLEDGMENT iv

I. INTRODUCTION 1

II. OBSERVATIONS 2

III. THEORETICAL INTERPRETATIONS 6

IV. PROSPECTS 19

I. INTRODUCTION

The latter half of the nineteen seventies has witnessed a spectacular increase in the understanding of the detailed dynamics of the auroral arc. This happy circumstance is supported on the one hand by the advent of high-resolution observations by auroral satellites at altitudes $\sim 1\ R_E$, such as those obtained by instruments on board the S3-3 satellite, and on the other by earlier rocket and radar backscatter observations at ionospheric altitudes. Since auroral processes are a major element in the coupling between the magnetosphere and the ionosphere, we undertake in this paper to review briefly what the new satellite observations imply and do not imply in the theoretical understanding of auroral dynamics in general and the coupling between the ionosphere and the magnetosphere in particular.

Because of the self-imposed restriction of brevity, the scope of this topical review is limited to those dynamical aspects of the aurora directly related to the detailed processes of ionosphere-magnetosphere coupling. The very important optical observations of the aurora fall in a different category and are not included here. Global-scale morphology of ionospheric currents generated by auroral precipitation of energetic particles and the mapping of auroral electrostatic fields down to ionospheric heights are important consequences of the aurora; however, these effects are consequential rather than fundamental to the coupling between the ionosphere and the magnetosphere so we shall allude to them only briefly. In short, we limit our consideration to recent advances in the understanding of particle and field dynamics as they affect ionosphere-magnetosphere coupling in the aurora.

Further, since brevity is emphasized, works and authors referenced here are meant to be representative rather than exhaustive. We attempt to reference the latest work (circa 1978) representative of a particular area so that readers can find a more complete reference therein; therefore, works referenced in this paper do not necessarily carry with them any implication of special significance. Perhaps undue emphasis is placed on the implications of the S3-3 observations, which to some extent merely confirm what had been suspected from earlier rocket and satellite measurements; however, this is partially due to the timing of this review, falling at the point when the scope and coherence of the S3-3 observations have become clear to those of us who are interested in the theoretical aspects of ionosphere-magnetosphere coupling and possible predictions.

II. OBSERVATIONS

Before the advent of high-resolution observations by auroral satellites, data on ionospheric and magnetospheric coupling depended on balloon, rocket, and radar observations which were necessarily episodic; nevertheless, the basic physical properties of auroral ionospheric currents and electric fields (e.g., Cloutier, 1971; Mozer and Manka, 1971; Vondrak et al., 1971), together with their relationship to high-latitude convection electric fields (e.g., Cauffman and Gurnett, 1972; Heppner, 1972) measured by satellites, have been established. Generally, these measurements have indicated that the substorm convection electric field in the magnetosphere drives perpendicular ionospheric currents consistent with ionospheric perpendicular electric fields (meridional and zonal) of the order of tens of millivolts/meter. In addition, Birkeland currents parallel to auroral magnetic field lines seem to have been observed (e.g., Armstrong and Zmuda, 1973). These low-altitude observations are primarily concerned with the morphology and large-scale processes of auroral substorms and are instrumental in emphasizing the importance of the electric field in auroral processes. They, however, have relatively little to say about the microscopic processes taking place in the auroral region.

Even as the large-scale auroral processes were being unravelled, certain microscopic features of auroral low-energy particle precipitations were being discovered. Frank and Ackerson (1971) noted that occasionally

observations of low-energy (tens of keV) electron precipitation would show an "inverted-V" structure on an energy-time spectrum plot, i.e., the precipitating electron energy spectrum hardens and then softens as the Injun 5 satellite moves through the structure. Evans (1974; 1975) convincingly demonstrated that rocket measurements of auroral low-energy electrons indicated downward moving electron beams at keV energies, comparable to those of "inverted-V" structures. Further, by a careful study of electron backscatter from the atmosphere, Evans demonstrated that these auroral electron beams are indications of electric potential drops, along the magnetic field, existing between the equator and the ionosphere. At about the same time, observations of singly ionized energetic O^+ ions in the magnetosphere (Shelley et al., 1972; Sharp et al., 1974) also gave indication that microscopic processes in the aurora couple the ionosphere with the magnetosphere.

These observations of "inverted-V" structures, of electron beams, and of O^+ ions of probable ionospheric origin in the magnetosphere presage very interesting microscopic processes to be discovered in the auroral process in which the ionosphere plays an active rather than passive role. However, because of the episodic nature of rocket observations and because of the low resolution and low data rate of the early satellite observations, the scope of and inter-relationship between these phenomena were not understood until the launch of the polar-orbiting auroral satellite S3-3, which intercepts auroral field lines at altitudes up to ~8000 km, precisely in the region where ionospheric and magnetospheric plasmas are expected to interact. Included in the S3-3 payload are instruments to measure electric fields (Mozer et al., 1977), low energy electrons (Mizera et al., 1976), energetic ions (Shelley et al., 1976), and plasma waves (Kintner et al., 1978). While a co-ordinated data-analysis program among the various auroral measurements is presently being pursued, the separately reduced data have already yielded a coherent picture of the microscopic auroral processes in which magnetosphere-ionosphere coupling plays a central role.

The S3-3 observations not only confirmed Evans' observations of downward-moving field-aligned electron beam at keV energies but also revealed the existence of upward-moving ion beams aligned with the magnetic field in "inverted-V" structures. This certainly indicates that the three phenomena are intimately related, but more importantly the S3-3 particle observations leave little doubt that an electric potential drop of several to tens of kilovolts, aligned with the magnetic field, exists between the ionosphere and the magnetospheric equator. Electrostatic field measurements also indicate paired regions of oppositely directed perpendicular electric fields, with latitudinal scale lengths of some 50 km, reflecting a negative space-charge region presumably associated with downward-streaming electrons. Figure 1, which is a composite of particle and electric field data illustrates the above points. For further emphasis, Figure 2 shows an enlarged view of the perpendicular electric field data for the time period marked by the brace in the middle of Figure 1. A crucial, but seldom emphasized, feature which is brought out by the high sensitivity and high resolution of the S3-3 measurements is that the above correlated features are observed at the auroral zone pass after pass at all

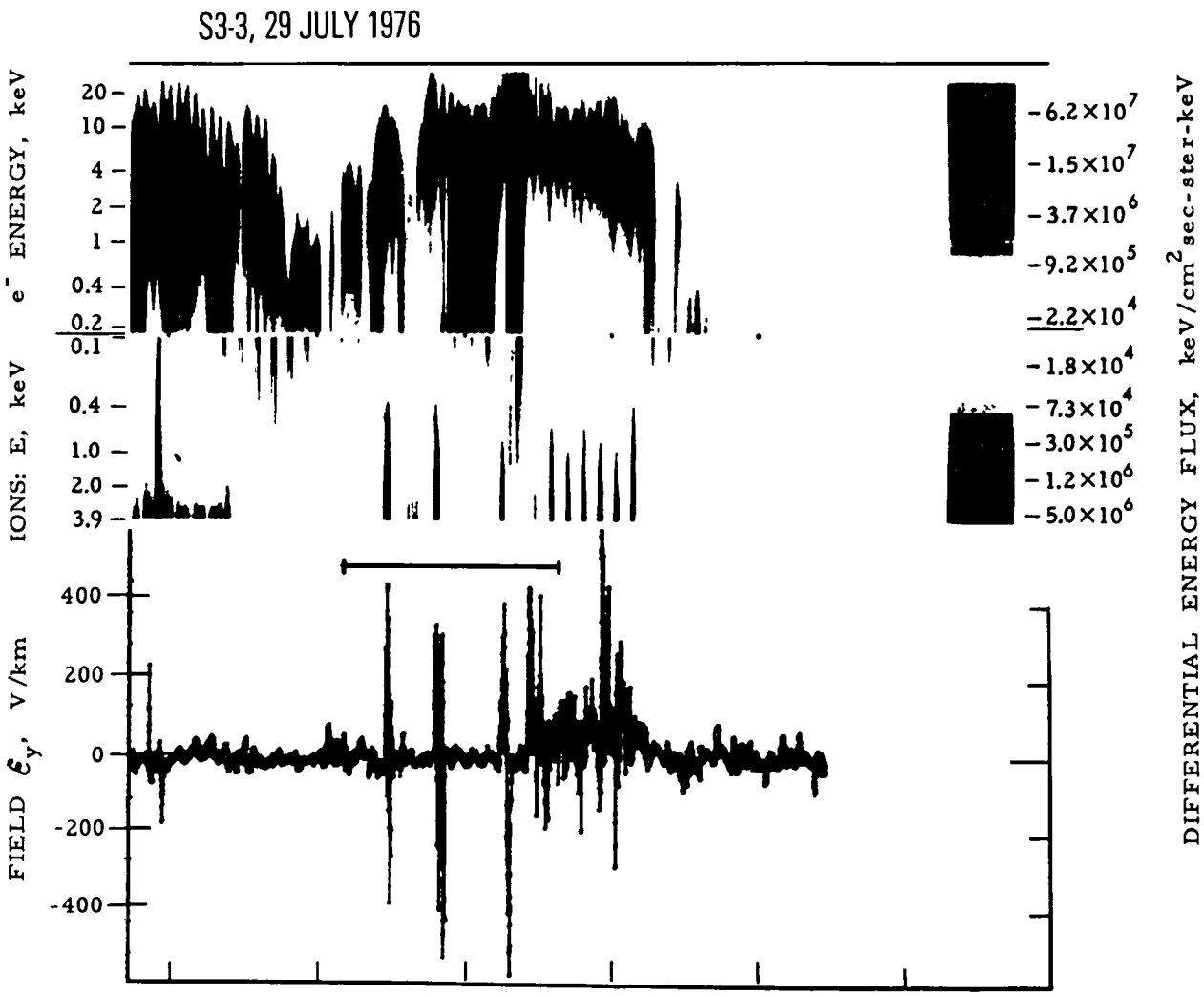

UT, ksec	40.8	41.0	41.2	41.4	41.6	41.8	42.0
Inv Lat	70.5°	72.6°	74 6°	76.4°	78.0°		
Mag LT	19.3°	19.1°	18.7°	18.3°	17.8°		
Alt, km	7274	7472	7641	7782	7893		
|B|, γ	5940	5770	5630	5510	5410		

Figure 1

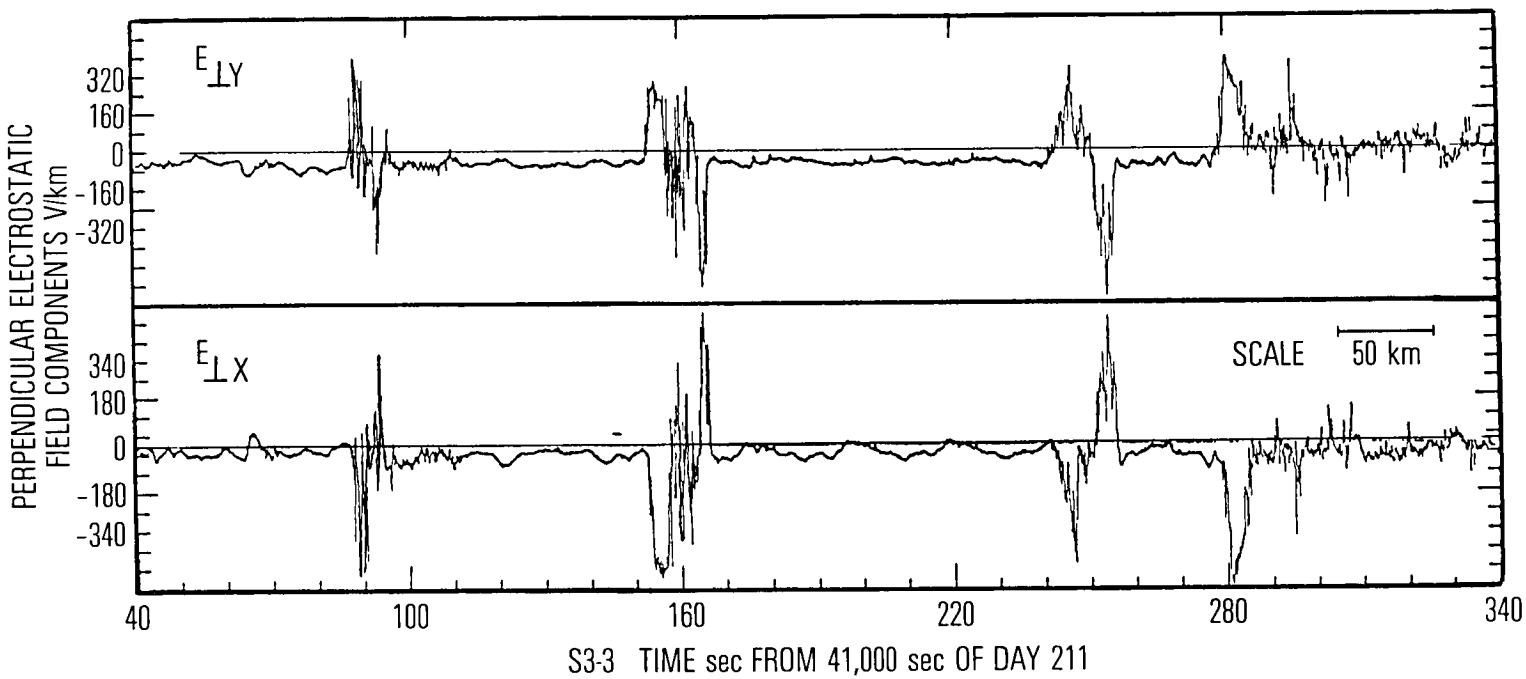
PERPENDICULAR ELECTROSTATIC
FIELD COMPONENTS V/km
$E_{\perp Y}$
320
160
0
-160
-320
$E_{\perp X}$
340
180
0
-180
-340
SCALE
50 km
40
100
160
220
280
340
S3-3 TIME sec FROM 41,000 sec OF DAY 211

Figure 2

satellite altitudes. In other words, these are fundamental features of the aurora rather than episodic curiosities. Further, plasma waves are observed to be associated with particle beams.

Aside from measurements which give, for the first time, support to a simple electrostatic picture of auroral microscopic processes, the S3-3 observations also reveal a whole class of new phenomena. The most outstanding among these are: 1) observations of "conical" beams, i.e., intense ion fluxes with pitch-angles concentrated on a cone about the direction of the magnetic field, with relatively little ion flux along the magnetic field; 2) upward-going field-aligned electron beams, and 3) downward field-aligned ion beams which are more diffuse than the upward field-aligned ion beams. The signature of conical beams is a bifurcated trace on the ion spectrograms; one can see several examples in Figure 1. Such beams probably result from wave-particle interactions with the basic auroral particle beams, while the downgoing ions and upgoing electrons, observed at lower altitudes, are a signature of the return current driven by electrostatic processes in the ionosphere. The S3-3 auroral observations have opened new vistas in the theoretical study of auroral processes.

III. THEORETICAL INTERPRETATIONS

The key theoretical issue concerning the interpretation of the S3-3 observations really involves the electrodynamics of the auroral arc itself. A key fact which must be recognized is that a magnetic-field-aligned electrostatic potential difference of kilovolt magnitude exists between the ionosphere and the equator. In many respects, this feature has been anticipated in a number of theoretical considerations based on earlier observations. With regard to ionosphere-magnetosphere coupling, however, the crucial question is whether the mechanism for the buildup of such a field-aligned potential drop involves the ionosphere, for there is no doubt that the energy source of the aurora is derived from hot magnetospheric plasmas which are injected by substorm processes onto the auroral field lines. Some aspects of these theories of auroral field-aligned potential drop have been reviewed (Shawhan et al., 1978; Hudson and Mozer, 1978), but our discussions will be primarily concerned with the ionosphere-magnetosphere coupling aspects of these theories.

Theories of auroral processes involving magnetic field-aligned electrostatic potential differences can be roughly classified into five categories, although they are not mutually exclusive. These are: 1) double layer, 2) oblique electrostatic shock, 3) anomalous resistivity, 4) magnetic mirroring effects of differential pitch-angle anisotropy between ions and electrons, and 5) downward mapping of convection electric field discontinuities. These categories invoke theoretical arguments of varying degrees of sophistication and believability to show that kilovolt electrostatic potential drops may be produced in various assumed plasma distributions. The double-layer model is sharply differentiated from the others by its prediction of the scale length with which the total field-

aligned potential difference is distributed, i.e., the magnitude of the parallel electric field.

For the most part, these mechanisms have been considered in isolation of each other and of the ionosphere, not because physicists believe that it should be so, but because it is difficult to treat the couplings. In fact, a correct theoretical treatment of auroral phenomena will without doubt merge several of these mechanisms with each other and with ionospheric physics. It is unfortunate that much of the recent literature on auroral mechanisms pays so little attention to coupling with the ionosphere; some exceptions (with two of which the authors are connected) exist, though. As a general rule, the ionosphere couples neighboring field lines and allows for predictions of latitudinal structure and scale lengths. There is no such coupling in the individual mechanisms mentioned above (except that oblique shocks have an arbitrary structure which crosses field lines), so none can explain arc structure without going beyond the given mechanism. Our discussion begins with the traditional view of these mechanisms in isolation, then proceeds to a brief discussion of coupling schemes.

The double layer (Block, 1975; Shawhan et al., 1978) is a boundary layer between unmagnetized cold plasma on one side and hot plasma on the other. The potential drop across the layer is alleged to be $\gtrsim kT_e/|e|$ and the layer thickness is of the order of several Debye lengths (~ 10 km); thus, the parallel electric field in double layers must be $\sim(0.1 - 1)$ V/m. A current-driven instability is usually invoked as the formation mechanism of double layers, which requires a field-aligned current greater than a certain threshold value. If potential drops inferred by electron beam observations at S3-3 altitudes as high as ~ 8000 km are all due to double layers above the satellite, then evidently the ionosphere does not seem to be a factor in double layer formation either. Frequently, based on observations of both electron and ion beams on S3-3, one may infer that potential drops exist both above and below the satellite (Mizera and Fennell, 1977; Croley et al., 1978). Since it is highly improbable that the satellite just happened to pass through within the double layer thickness, such frequent occurrences seem to require more than one double layer to be formed on the same field line. Theories of double layer formation are mathematically difficult, even for very simple plasma distributions (Montgomery and Joyce, 1969), and a quantitative theory has yet to be developed for auroral plasmas. Even supposing that the theory is finally developed, and that difficulties of interpreting satellite data in terms of double layers can be overcome, there is one fundamental problem with double-layer models. They do not account for the influence of the earth's magnetic field, which — except for the unrealistic case of a double layer exactly perpendicular to a magnetic field line — is unwarranted, as we point out below. With regard to our main subject of magnetosphere-ionosphere coupling, double layers are so thin that they are almost completely decoupled from the ionosphere themselves. Furthermore, they tend to decouple the ionosphere from the magnetosphere above the double layer by effectively short-circuiting the magnetospheric electrical structure well above the ionosphere as indicated on Figure 3. In such a model, the ionosphere interacts little with the magnetosphere.

Oblique electrostatic shocks (Swift, 1975; 1976; Kan, 1975) are similar to double layers except that they recognize the influence of the

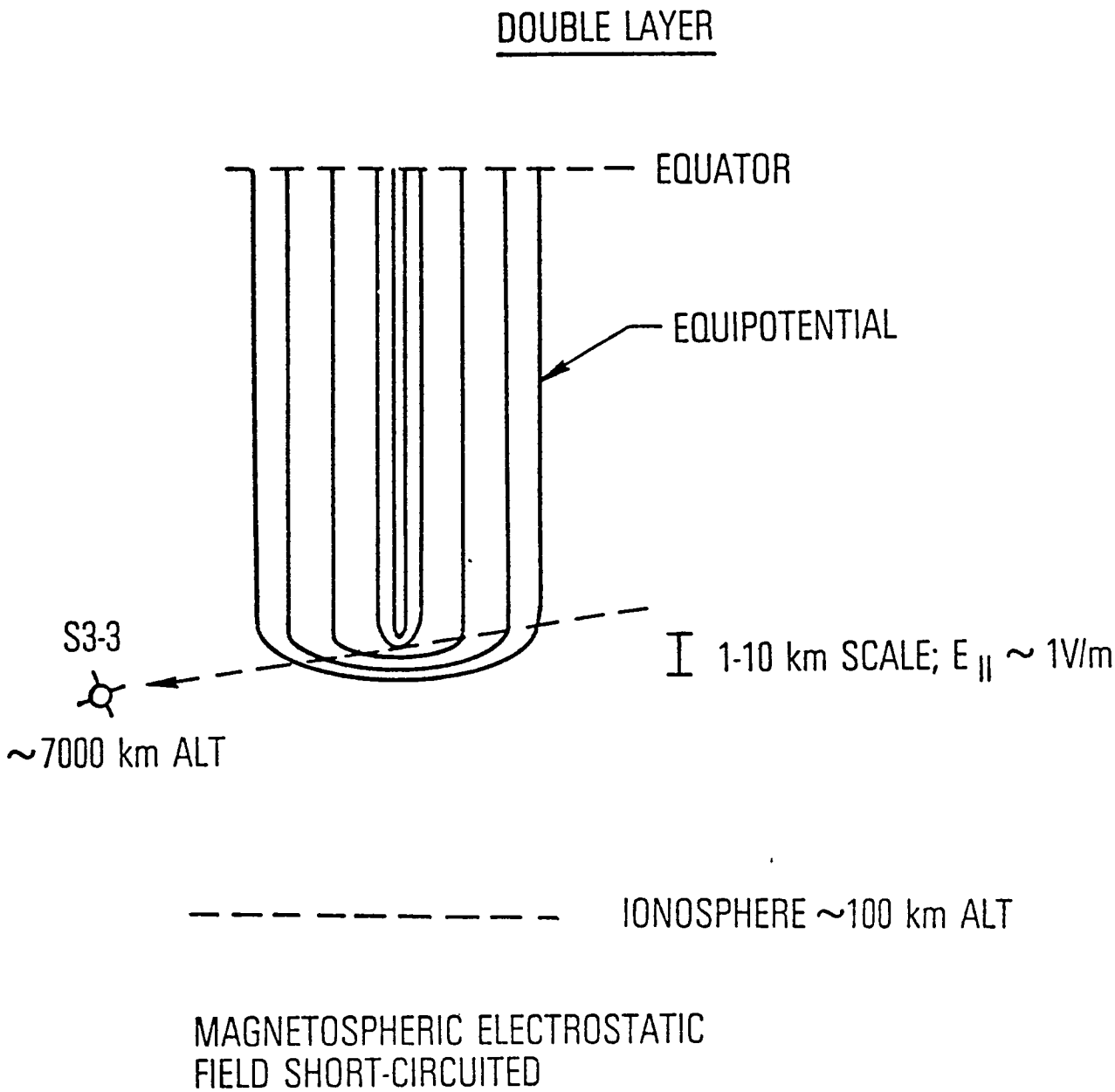
DOUBLE LAYER
EQUATOR
EQUIPOTENTIAL
S3-3
1-10 km SCALE; E || ~ 1V/m
~7000 km ALT
IONOSPHERE ~100 km ALT
MAGNETOSPHERIC ELECTROSTATIC
FIELD SHORT-CIRCUITED

Figure 3

magnetic field and consider that the shock normal is at an arbitrary angle α to the magnetic field direction. For $\alpha \neq 0$ the shock thickness ℓ is measured in units of the ion gyroradius of a few km, a typical cross-field scale being some 15-20 gyroradii ($\sim$100 km). The field-aligned scale length is $\ell/\cos\alpha$ which can be quite extensive if the shock normal angle α approaches $\pi/2$. Swift has shown that self-consistent oblique shock solutions can be obtained with simple plasma distributions not unlike auroral conditions. A schematic illustration of Swift's double reverse electrostatic shock is shown in Figure 4. In addition to the fact that solutions of Poisson's equation have been obtained for semi-realistic plasma distributions in a homogeneous magnetic field, the oblique shock geometry has certain advantages over the current-driven double layer in regard to the interpretation of S3-3 data, even though the theory was conceived prior to S3-3. This is because the field-aligned scale length $\ell/\cos\alpha$ can be chosen to be of the order of 1-2 R_e so that only one shock (or a pair of double reverse shocks) need be invoked to explain the existence of potential drops above and below the satellite. It is, of course, a disadvantage that the theory as developed by Swift does not predict α, or equivalently the cross-field scale length. As we discuss later, this scale length can be estimated by incorporating ionospheric physics. An oblique shock with parallel scale length of ≥ 1 R_e is almost certainly strongly coupled to the ionosphere, which at the very least supplies important boundary conditions for the shock. The ionosphere and the magnetosphere tend to be strongly coupled as well, if only because the shock is so extended along the magnetic field.

A third mechanism by which a magnetic field-aligned electric potential drop can allegedly be generated is anomalous resistivity in the field-aligned direction (Hudson et al., 1978). Such anomalous resistivity may be due to a large number of possible modes of AC electric-field turbulence in the auroral plasma (e.g., Kindel and Kennel, 1971; Papadopoulos and Coffey, 1975). Hudson et al. (1978) estimated that turbulent electric fields in the electrostatic ion cyclotron mode with amplitudes $\sim$50 mV/m may yield sufficient anomalous resistivity to generate parallel electrostatic (DC) fields of $\sim$1 mV/m. However, it is not clear how the largely perpendicular AC fields can affect parallel electron currents (and their resistivity). One feature common to oblique-shock models and anomalous-resistivity models is that the potential smoothly varies over a scale of $\sim$1 R_e extension in order to accommodate potential drops of $\sim$ (1-10) kilovolts. This is schematically illustrated in Figure 5. It must be noted that the question of how such an extensive region of turbulence can be maintained at a high level ($\sim$ 50 mV/m AC), in the presence of non-linear stabilizing effects such as ion heating, must be addressed. A second feature of anomalous resistivity is that, unlike oblique shock models, there is little apparent relationship between the parallel and perpendicular electrostatic fields. In regard to ionosphere-magnetosphere coupling, the ionosphere plays a major role in at least one consideration of current-driven instabilities (Kindel and Kennel, 1971) since the effects of very weak ion-neutral and electron-neutral collisions, $\sim 2 \times 10^{-2}$ of the cyclotron frequency, are stabilizing, as are the effects of ion heating. It must be said, however, that hydrogen ion-cyclotron waves are measured (Kintner et al., 1978) and there is little doubt that these waves will turn out to play some role in the dynamics of the auroral beams.

DOUBLE REVERSE SHOCK

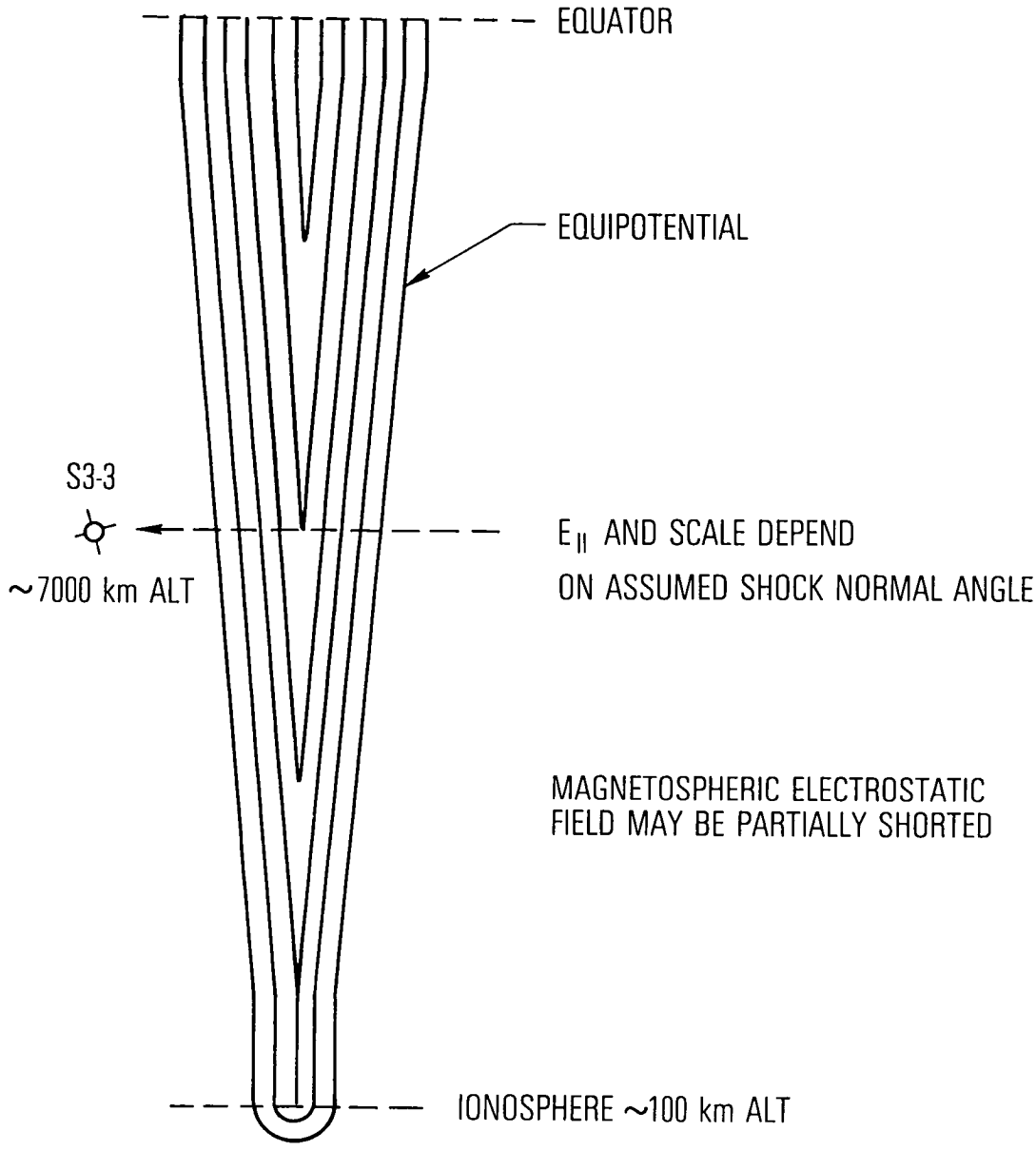

Figure 4

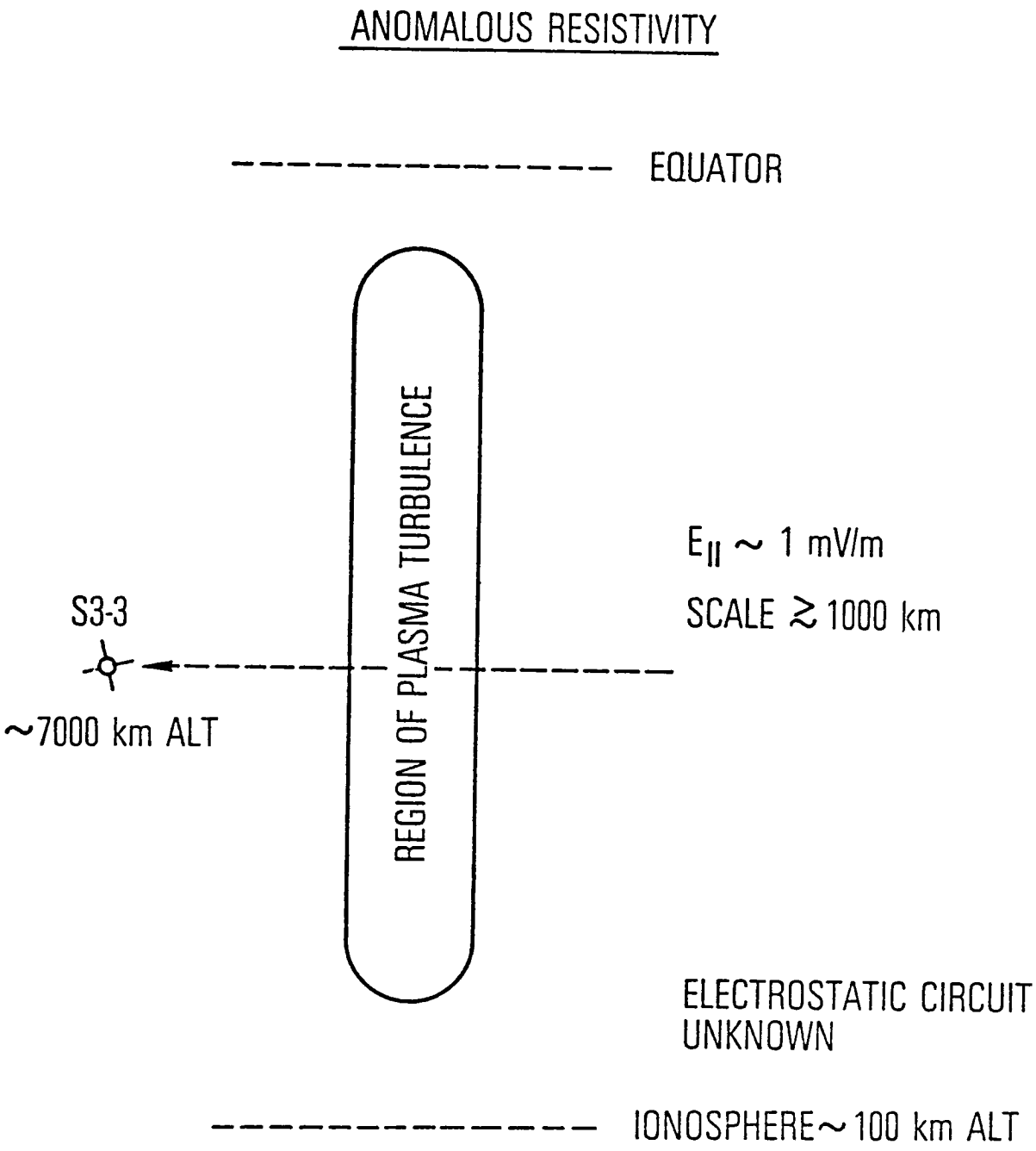
ANOMALOUS RESISTIVITY
EQUATOR
REGION OF PLASMA TURBULENCE
$E_{\parallel} \sim 1$ mV/m
SCALE $\gtrsim$ 1000 km
S3-3
~7000 km ALT
ELECTROSTATIC CIRCUIT
UNKNOWN
IONOSPHERE ~ 100 km ALT

Figure 5

The fourth viable mechanism for maintaining a magnetic field-aligned electric potential drop is that due to the magnetic mirroring effects of differential pitch-angle anisotropy between ions and electrons (Alfvén and Fälthammar, 1963). Unlike the other mechanisms considered above, this mechanism depends on the magnetic field structure being suitable for mirroring of the energetic plasma injected into the auroral region, for if the equatorial pitch-angle distributions of such ions and electrons are different their "average" mirroring locations will be different, thus setting up a charge separation electrostatic field. A number of authors have considered such a mechanism for the case of auroral plasma (e.g., Lemaire and Scherer, 1974; Whipple, 1977; Lennartsson, 1977; Chiu and Schulz, 1978), assuming strict charge neutrality. This is one model where a careful consideration of the contribution of cold ionospheric electrons is absolutely essential. One-dimensional quasi-neutral calculations (Chiu and Schulz, 1978) indicated that ionospheric plasma is crucial in the magnetic mirroring mechanism not only in giving a proper account of electron distributions, as in the phenomenological model of Evans (1974), but also in partially short-circuiting the very large potential drops expected from consideration of magnetospheric plasma alone (Alfvén and Fälthammar, 1963). In any case, the parallel scale length of this mechanism is essentially the field line distance between the ionosphere and the magnetospheric equator, i.e., the region in which the plasma mirrors, yielding parallel electric fields well below 1 mV/m (see Figure 6).

There is yet another possible source of auroral electric fields that accelerate ions and electrons in opposite directions along the earth's magnetic field. This last possible source is the magnetospheric convection electric field. The convection electric field is perpendicular to the magnetic field at high altitudes, but its meridional (r, θ) component has a theoretical discontinuity at or near the boundary between closed and open magnetic field lines (see Figure 7, which shows the amplitudes of the diurnal variation of E at ionospheric altitudes). Ionospheric resistivity would partially connect electrostatic equipotentials across the discontinuity, but at too low an altitude to account properly for the observed component of E parallel to B. However, the "kinematical resistivity" associated with magnetic-mirror forces on a hot plasma may increase the altitude at which the parallel (to B) component of E would appear. The details of this latter effect, which (if it occurs) would produce the desired distribution of $E \cdot B$ with altitude, remain to be worked out. However, the effect would be such as to produce an upward electric field in the PM sector (maximal at dusk) and a downward electric field in the AM sector (maximal at dawn) of the auroral oval. This expectation is in good agreement with the diurnal distribution of upgoing ion beams observed by Ghielmetti et al. (1978).

It is evident that these physical mechanisms do not exist entirely independently of one another. For example, if the restrictive assumption of strict charge neutrality is removed in the magnetic-mirror model, one has an oblique electrostatic shock in a mirroring field. To the extent that no dissipative mechanisms such as wave-particle turbulence are included in such a "shock", the resulting electric-field structure is better described as a solution of Poisson's equation. From another point of view the oblique shock can be 'escribed as some sort of zero-frequency electrostatic ion-

MAGNETIC MIRRORING

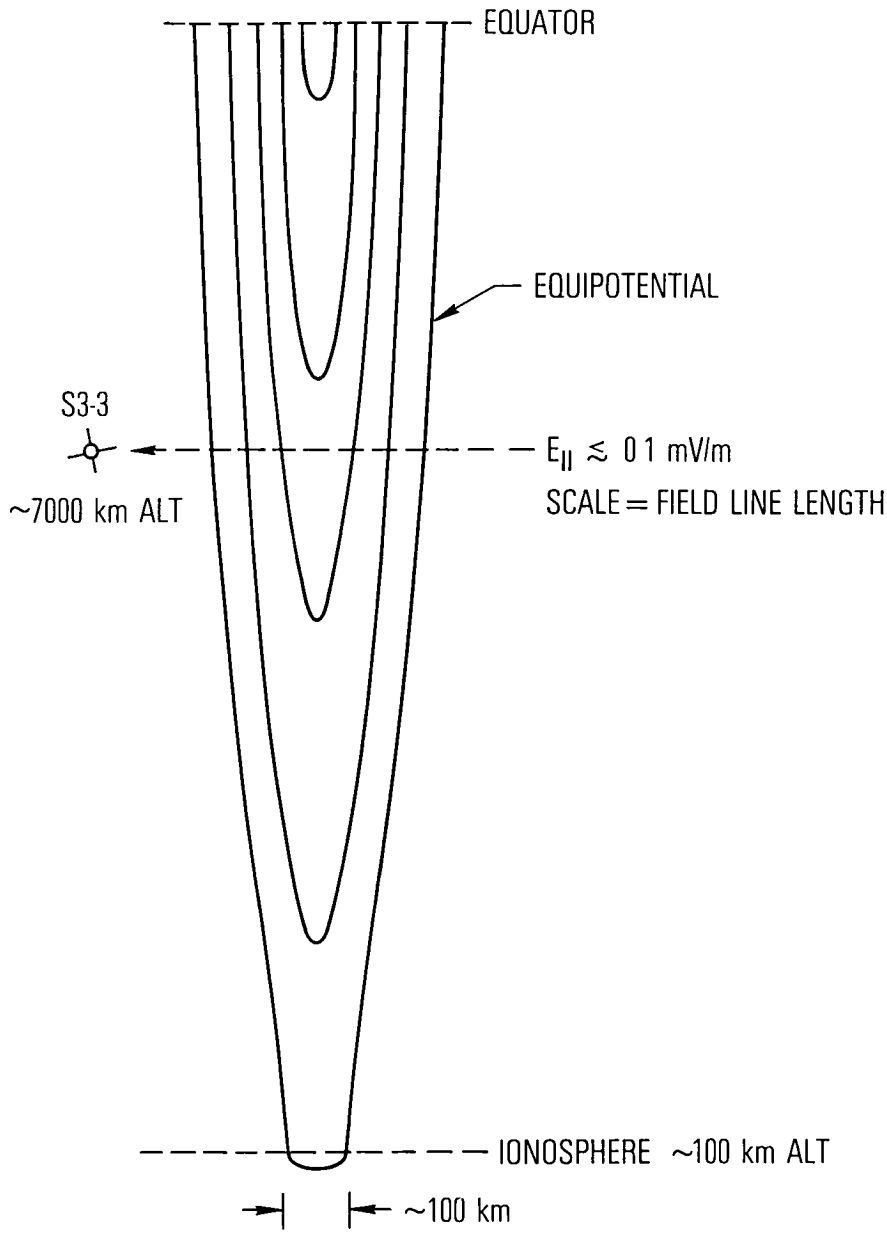

Figure 6

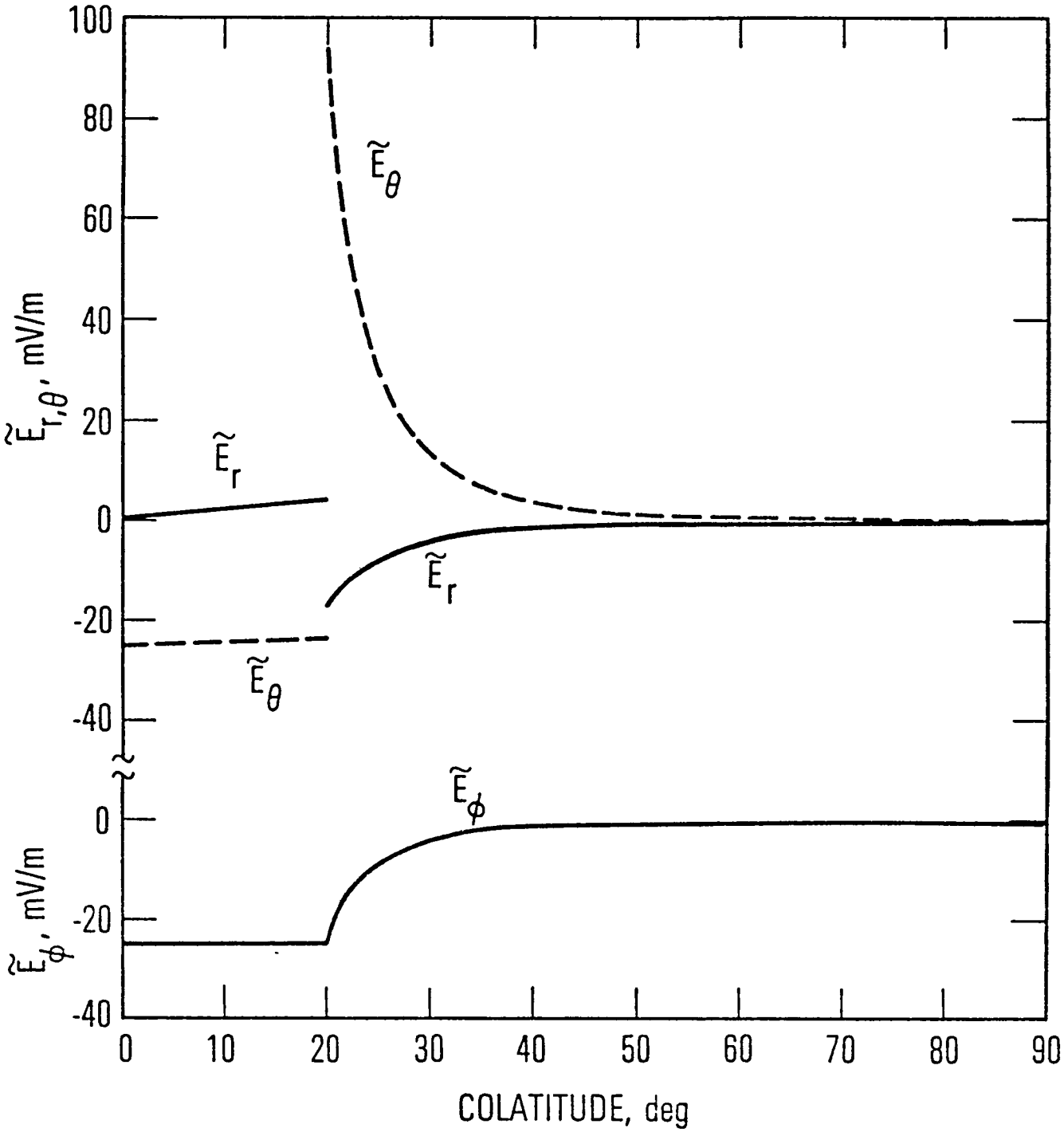
100
80
60
40
20
0
-20
-40
$\tilde{E}_{r,\theta}$, mV/m
$\tilde{E}_\theta$
$\tilde{E}_r$
$\tilde{E}_r$
$\tilde{E}_\theta$
0
-20
-40
$\tilde{E}_\phi$, mV/m
$\tilde{E}_\phi$
0
10
20
30
40
50
60
70
80
90
COLATITUDE, deg

Figure 7

cyclotron (EIC) mode. There surely is a great deal of EIC turbulence connected with auroras, and the physical distinction between the oblique shocks of Swift and this turbulence is at best imprecise. Yet the merging of wave turbulence and shocks can lead to substantial parallel electric potential drops in the complete absence of anomalous resistivity. (The reader need not be reminded that turbulence is not synonymous with anomalous resistivity; in fact, it is quite difficult to make anomalous resistivity out of even the most turbulent waves.)

In a recent work, Chiu and Cornwall (1978) have considered Poisson's equation in dipolar magnetic geometry, coupled with ionospheric physics. In such a model the parallel potential drop is intimately coupled to the perpendicular electrostatic field structure as indicated in Figure 1. Further, the scale length of the perpendicular electrostatic field structure is related not only to the field-aligned current to the ionosphere but also to the ionospheric Pedersen conductivity. Thus, ionosphere-magnetosphere coupling is a crucial ingredient determining the geometric structure as well as the energetics of the quiet auroral arc in such a model. At present, no satisfactory solution of such a model has yet been obtained in the return-current region, although an approximate solution in the central electron beam region has been obtained. A schematic illustration of this model is given in Figure 6.

Because the various mechanisms are not necessarily mutually exclusive, it is difficult to rule out any particular mechanism by observations; however, the parallel scale length, or equivalently, the peak magnitude of the parallel electric field, may be used to distinguish some models from others. Since the current-driven double layer is distinguished by a very short parallel scale length, one may ask if the parallel (to B) electrostatic-field observations of S3-3 would be able to distinguish the double layer from other mechanisms. Mozer et al. (1977) reported very large parallel electrostatic fields ($\gtrsim 100$ mV/m) in the presence of > 100 mV/m perpendicular electrostatic fields. These have been identified as ~ 800 mV/m parallel electrostatic fields of double layers (Shawhan et al., 1978). Hudson and Mozer (1978) were cautious in making such an identification because "the angular resolution of the instrument may alias the parallel electric field measurement in the presence of strong perpendicular electric fields greater than 100 mV/m." Particle measurements on S3-3 cannot resolve the question of parallel scale length either, although they do put constraints on double-layer models such as the necessity of multiple formation pointed out earlier. Thus, for the time being, no mechanism discussed above can be ruled out, but it must be said that double layers are unlikely both theoretically and experimentally. Clearly, further theoretical development of these models is needed to help the process of experimental elimination of unsuitable candidates. Identification of the auroral mechanism is especially important for ionospheric-magnetospheric coupling studies because the ionosphere plays roles of varying importance in various mechanisms. It would be very hard to believe that the ionosphere plays no active role at all in the dynamics of the aurora. In such an eventuality, ionospheric currents would be entirely decoupled from the magnetospheric currents, and our growing understanding of the relationship between auroral dissipation of currents and energy input into the magnetosphere would be lost. On the contrary, it seems that there is a genuinely strong

coupling between magnetospheric, auroral, and ionospheric phenomena.

IV. PROSPECTS

As we have seen in previous sections, the S3-3 measurements not only confirm the suspected existence of kilovolt electrostatic potential drops along auroral field lines but also clarify the relationship between inverted-V structures, electron and ion beams, and electrostatic fields in the aurora. However, because of aliasing problems, the parallel electric field measurements on board are unable to determine the parallel scale length of the electrostatic potential drops with confidence. We would have to depend on future experiments to settle this crucial question. If parallel electrostatic fields are as large as 800 mV/m, as one experiment suggests, then there is no question that some sort of double layer or electrostatic shock with small obliquity is involved. If on the other hand, the parallel electrostatic field turns out to be $\lesssim 1$ mV/m, as many experiments suggest, then anomalous resistivity, oblique shocks, and magnetic mirroring are all candidates. Undoubtedly these three mechanisms go hand in hand, so it is not a question of choosing only one of them.

Theorists are not yet ready to pronounce judgment in favor of one or another model, thus leaving open one vital question: Do parallel electric fields isolate the magnetosphere from the ionosphere? We (in agreement with traditional views) think not, but we know of no definitive experimental evidence which shows how magnetospheric and ionospheric current paths are closed. It may be that radar and other ground-based studies combined with satellites such as S3-3 can provide this evidence.

Another important issue is the mapping of perpendicular electric fields along field lines from the magnetosphere to the ionosphere. For most models other than the double layer, the mapping modifications induced by parallel electric fields may not be terribly significant, but there may be almost complete decoupling in double-layer models, so the mapping question will have to be completely reexamined. Presently, calculations of ionospheric currents, and their concomitant heating of the thermosphere (Straus and Schulz, 1976), depend on a variety of electrostatic models which depend on direct mapping of convection electric fields (e.g., Volland, 1975). If double layers exist over regions as extensive as inverted-V structures (to explain the electron beams), then the question of how convection electric fields map through a double layer must be addressed. Indeed, the role of the observed paired perpendicular auroral electrostatic fields (Figure 1) has not been considered in double layer theory.

Proponents of active ionospheric coupling with the magnetosphere will surely note that the observation of oxygen ion beams on S3-3 is evidence that the ionosphere may be a major source of charged particles for the auroral magnetosphere. Very recent isotopic-ratio observations of ring-current ions in the magnetosphere indicate that the ionosphere (via the aurora) may be a major source for the ring current as well (e.g., Young et al., 1977). We suggest that the next major advance in ionosphere-

magnetosphere coupling may be the understanding, both observational and theoretical, of the ultimate fate of these ion beams. Since downward moving ion beams are not observed at high altitudes, and since conical beams are primarily an ionic phenomena, the question of what happens to ion beams before they reach the equator appears to be interesting indeed.

This Page Intentionally Left Blank

REFERENCES

Alfvén, H., and C.-G. Fälthammar (1963): Cosmical Electrodynamics, pp. 163-167, Clarendon Press, Oxford.

Armstrong, J. C., and A. J. Zmuda (1973): Triaxial magnetic measurements of field-aligned currents at 800 km in the auroral region: Initial results, J. Geophys. Res., 78, 6802.

Block, L. P. (1975): Double layers, in Physics of the Hot Plasma in the Magnetosphere, pp. 229-249, edited by B. Hultqvist and L. Stenflo, Plenum Press, N. Y.

Cauffman, D. P., and D. A. Gurnett (1972): Satellite measurements of high latitude convection electric fields, Space Sci. Rev., 13, 369.

Chiu, Y. T., and J. M. Cornwall (1978): Electrostatic model of a quiet auroral arc, submitted to J. Geophys. Res.

Chiu, Y. T., and M. Schulz (1978): Self-consistent particle and parallel electrostatic field distributions in the magnetospheric-ionospheric auroral region, J. Geophys. Res., 83, 629.

Cloutier, P. A. (1971): Ionospheric effects of Birkeland currents, Rev. Geophys. Space Phys., 9, 987.

Croley, D. R., Jr., P. F. Mizera, and J. F. Fennell (1978): Signature of a parallel electric field in ion and electron distributions in velocity space, J. Geophys. Res., 83, 2701.

Evans, D. S. (1974): Precipitating electron fluxes formed by a magnetic field-aligned potential difference, J. Geophys. Res., 79, 2853.

Evans, D. S. (1975): Evidence for the low altitude acceleration of auroral particles, in Physics of the Hot Plasma in the Magnetosphere, pp. 319-340, edited by B. Hultqvist and L. Stenflo, Plenum Press, N. Y.

Frank, L. A., and K. L. Ackerson (1971): Observation of charged particle precipitation into the auroral zone, J. Geophys. Res., 76, 3612.

Ghielmetti, A. G., R. G. Johnson, and E. G. Shelley (1978): The latitudinal, diurnal and altitudinal distributions of upward flowing energetic ions of ionospheric origin, Geophys. Res. Letters, 5, 59.

Heppner, J. P. (1972): Electric field variations during substorms: Ogo 6 measurements, Planet. Space Sci., 20, 1475.

Hudson, M. K., and F. S. Mozer (1978): Electrostatic shocks, double layers, and anomalous resistivity in the magnetosphere, Geophys. Res. Letters, 5, 131.

Hudson, M. K., R. L. Lysak, and F. S. Mozer (1978): Magnetic field-aligned potential drops due to electrostatic ion cyclotron turbulence,

Geophys. Res. Letters, 5, 143.

Kan, J. R. (1975): Energization of auroral electrons by electrostatic shock waves, J. Geophys. Res., 80, 2089.

Kindel, J. M., and C. F. Kennel (1971): Topside current instabilities, J. Geophys. Res., 76, 3055.

Kintner, P. M., M. C. Kelley, and F. S. Mozer (1978): Electrostatic hydrogen cyclotron waves near one earth radius altitude in the polar magnetosphere, Geophys. Res. Letters, 5, 139.

Lemaire, J., and M. Scherer (1974): Ionosphere-plasmasheet field-aligned currents and parallel electric fields, Planet. Space Sci., 22, 1485.

Lennartsson, W. (1977): On high-latitude convection field inhomogeneities, parallel electric fields and inverted-V precipitation events, Planet. Space Sci., 25, 89.

Mizera, P. F., and J. F. Fennell (1977): Signatures of electric fields from high and low altitude particle distributions, Geophys. Res. Letters, 4, 311.

Mizera, P. F., D. R. Croley, Jr., and J. F. Fennell (1976): Electron pitch-angle distributions in an inverted-'V' structure, Geophys. Res. Letters, 3, 149.

Montgomery, D. C., and G. Joyce (1969): Shock-like solutions of the electrostatic Vlasov equation, Plasma Phys., 3, 1.

Mozer, F. S., and R. H. Manka (1971): Magnetospheric electric field properties deduced from simultaneous balloon flights, J. Geophys. Res., 76, 1697.

Mozer, F. S., C. W. Carlson, M. K. Hudson, R. B. Torbert, B. Paraday, J. Yatteau, and M. C. Kelley (1977): Observations of paired electrostatic shocks in the polar magnetosphere, Phys. Rev. Letters, 38, 292.

Papadopoulos, K. (1977): A review of anomalous resistivity for the ionosphere, Rev. Geophys. Space Phys., 15, 113.

Sharp, R. D., R. G. Johnson, E. G. Shelley, and K. K. Harris (1974): Energetic O^+ ions in the magnetosphere, J. Geophys. Res., 79, 1844.

Shawhan, S. D., C. G. Fälthammar, and L. P. Block (1978): On the nature of large auroral zone electric fields at 1-R_E altitude, J. Geophys. Res., 83, 1049.

Shelley, E. G., R. D. Sharp, and R. G. Johnson (1976): Satellite observations of an ionospheric acceleration mechanism, Geophys. Res. Letters, 6, 54.

Shelley, E. G., R. G. Johnson, and R. D. Sharp (1972): Satellite observation of energetic heavy ions during a geomagnetic storm, J. Geophys. Res., 77, 6104.

Straus, J. M., and M. Schulz (1976): Magnetosphere convection and upper atmospheric dynamics, J. Geophys. Res., 81, 5822.

Swift, D. W. (1975): On the formation of auroral arcs and acceleration of auroral electrons, J. Geophys. Res., 80, 2096.

Swift, D. W. (1976): An equipotential model for auroral arcs, 2, numerical solutions, J. Geophys. Res., 81, 3935.

Volland, H. (1975): Models of global electric fields within the magnetosphere, Ann. Geophys., 31, 154.

Vondrak, R. R., H. R. Anderson, and R. J. Spiger (1971): Rocket-based measurements of particle fluxes and currents in an auroral arc, J. Geophys. Res., 76, 7701.

Whipple, E. C., Jr. (1977): The signature of parallel electric fields in a collisionless plasma, J. Geophys. Res., 82, 1525.

Young, D. T., J. Geiss, H. Balsinger, P. Eberhardt, A. Chielmetti, and H. Rosenbauer (1977): Discovery of He_2^+ and O_2^+ ions of terrestrial origin in the outer magnetosphere, Geophys. Res. Letters, 4, 561.

DISTRIBUTION

Internal

J. B. Blake
W. T. Chater
J. Frawley
H. H. Hilton
C. K. Howey
E. B. Mayfield
F. A. Morse
G. A. Paulikas
E. H. Rogers
H. R. Rugge
M. T. Weiss

External

SAMSO TM/Mr. Aichinger

SAMSO (YC/AT) Mr. J. Hess
Dr. J. Kelley

SAMSO (WE)

ESD (ESTI)
L G Hanscom Field
Bedford, Mass. 01731

AFSC (DLS)
Andrews AFB
Washington, D. C. 20331

USAF/ETAC
Scott AFB
Illinois 62225

ONR (Physics Branch)
Code 421
Washington, D. C. 20333

AFAPL (NA)
Wright-Patterson AFB
Ohio 45433

Commanding Officer
Harry Diamond Laboratories
(Library)
U. S. Army Materiel Command
Washington, D. C. 20438

Air University Library
Maxwell AFB
Ala. 37112

AFIT
Technical Library
Wright-Patterson AFB
Ohio 45433

FJSRL
Technical Library
USAF Academy
Colorado Springs, Colo. 80840

Scientific & Tech. Info. Facility UNC
P. O. Box 33
College Park, Md. 20740
Attn: NASA Representative

U.S. Dept. of Commerce
Library, National Oceanic &
Atmospheric Administration
Environmental Research Laboratories
Boulder, Colo. 80302

U.S. Weather Bureau
National Weather Satellite Center
Suitland, Md. 20023
Attn: S. Fritz

HQ Air Weather Service/DNPS/
Stop 400
Scott AFB
Illinois 62225

NASA
National Space Science Data Center
Goddard Space Flight Center
Greenbelt, Md. 20771
Attn: Dr. J. Vette

NOAA Research Laboratories
Boulder, Colo. 80302
Attn: Dr. D. J. Williams

AFFDL (SU)
Wright-Patterson AFB
Ohio 45433

AFAL (CA)
Wright-Patterson AFB
Ohio 45433

RADC (XP)
Griffiss AFB
N.Y. 13442

NASA (Library)
Goddard Space Flight Center
Greenbelt, Maryland 20771

NASA (Library)
Lewis Research Center
21000 Brookpart Road
Cleveland, Ohio 44135

NASA (Library)
Marshall Flight Center
Huntsville, Ala. 35812

National Bureau of Standards
(Library) (UNC)
Washington, D.C. 20234

Naval Ordinance Lab. (Tech Library)
White Oaks
Silver Springs, Md. 20919

Naval Research Laboratory
Director, Tech. Info. Ofcr.
Code 2000
Washington, D.C. 20025

AFWL (Library)
Kirtland, AFB
New Mexico 87117

ONR Branch
Commanding Officer
1030 Green Street East
Pasadena, Calif. 91100

Library of Congress
Washington, D.C. 20025

NASA (Library)
Ames Research Center
Moffett Field, Calif. 94035

NASA (Library)
Langley Research Center
Hampton, Va 23365

ERDA
Director of Research
Washington, D.C. 20025

ERDA
Tech. Info. Service Extension
P.O. Box 62
Oak Ridge, Tenn. 37830

U. S. Naval Research Laboratory
(Library)
Washington, D. C. 20025

DARPA
Strategic Technology Office
1400 Wilson Blvd.
Arlington, Va 22209
Attn: R. Zirkind/OSD

AFTAC
HQ USAF (TD-5B)
Patrick AFB, Fl. 32925

AEDC (ER)
Arnold AFS, Tenn. 37389

AFGL
L G Hanscom Field
Bedford, Mass. 01730

AFOSR/XR
Bolling AFB
Washington, D. C. 20332

End of Document