General Disclaimer

One or more of the Following Statements may affect this Document

- This document has been reproduced from the best copy furnished by the organizational source. It is being released in the interest of making available as much information as possible.

- This document may contain data, which exceeds the sheet parameters. It was furnished in this condition by the organizational source and is the best copy available.

- This document may contain tone-on-tone or color graphs, charts and/or pictures, which have been reproduced in black and white.

- This document is paginated as submitted by the original source.

- Portions of this document are not fully legible due to the historical nature of some of the material. However, it is the best reproduction available from the original submission.

Produced by the NASA Center for Aerospace Information (CASI)

VALIDATION OF A MODEL FOR INVESTIGATING RED CELL MASS CHANGES DURING WEIGHTLESSNESS*

By

J. I. Leonard, Ph. D.
General Electric Company
Space Division
Houston, Texas 77058

INTRODUCTION

This paper considers the validation of a model describing the control of the red blood cell mass. The study was motivated by the consistent finding that men returning from space after 4 to 84 days have exhibited significant decrements in their total number of red blood cells.[1] In the earlier missions of Gemini and Apollo this loss in red cell mass could be attributed to the pure oxygen atmosphere since this environment is known to both inhibit red cell production and increase red cell destruction.[2] The environment of Skylab, however, was a mixture of oxygen and nitrogen, with the same oxygen partial pressure as sea level. It was anticipated that with normal oxygen levels the red cell mass of the Skylab crew would be maintained. One of the more unexpected findings of the biomedical program, therefore, was that upon return to earth the Skylab crews had measured losses of red cells equal to or greater than those observed on previous missions. Postflight observations showed that increased destruction of red cells did not occur as on Gemini and Apollo, but rather the loss in red cell mass must have been due to a suppression of red cell production by some unknown mechanism.[3]

---

* Presented at Operations Research Society of America (ORSA) National Meeting in Las Vegas, Nevada, November 17-19, 1975. (ORSA Bulletin, Supplement 2, Volume 23, 1975).

(NASA-CR-160188) VALIDATION OF A MODEL FOR INVESTIGATING RED CELL MASS CHANGES DURING WEIGHTLESSNESS (General Electric Co.) 29 p HC A03/MF A01 #rpt Repr. from the ORSA Bull CSCL 06S G3/52

N79-24634

Unclas 22207

Figure 1 illustrates the average change in blood volumes for all nine crewmembers of the three missions. The values shown are the changes between immediate postflight and preflight control. Blood volume has decreased by 11%. The plasma volume and red cell volume — the two major elements that comprise blood — are seen to decrease in equal proportions. Unfortunately, neither of these quantities could be directly measured during flight, but other data suggest that plasma volume decreased rather early in-inflight while red cell mass decreased more gradually. A rapid and sustained loss in plasma volume was expected as a normal consequence of the stress of weightlessness, but the decrease in red cell mass was not. The last value shown in Figure 1, the whole-body hematocrit, is simply the concentration of red cells in the blood. Its value is determined by dividing the red cell mass by the blood volume. Data collected on Skylab indicates that the hematocrit increased by 10% very early in the mission due to the sudden decrease in plasma volume, but then gradually returned toward normal values as red cell mass slowly decreased.

While the losses shown in Figure 1 are relatively moderate, they are of concern for several reasons: a) it is important to ascertain that this is part of the normal adaptation to weightlessness, b) it is necessary to establish the time course of this change to insure the future safety of crews on missions lasting many months, and c) it is believed that after reentry into earth's gravity, this blood loss is partially responsible for the dizziness and temporary instability of the crew.

When the first Skylab crew returned and an unexpected 14% decrement in red cell mass was measured, our bioengineering group was asked by members of the Skylab medical team to review this problem. We were requested to recommend whether or not systems analysis and simulation modeling techniques might be of some value in suggesting physiological mechanisms responsible for this so-called "anemia of space flight". The study that followed was carried

CHANGES IN BLOOD VOLUMES/SKYLAB*
(PREFLIGHT VS. POSTFLIGHT)

	Δ% FROM PREFLIGHT	
BLOOD VOLUME	-11.0	± 3.6
PLASMA VOLUME	-11.4	± 6.1
RED CELL MASS	-11.1	± 5.0
WHOLE BODY HCT	+ 0.05	± 7.4

* Mean ± SD for nine subjects in three missions

Ref: Kimzey (1975)

Figure 1

out in two phases. The first phase was concerned with developing and verifying a mathematical model and resulted in a testable hypothesis.[4] The second phase was characterized by a more intensive validation procedure using available 1-g data that was necessary to convince ourselves and others of the soundness of our original hypothesis. A third phase which is still in progress involves detailed simulations, including parameter estimation studies of the actual Skylab experiment during zero-g.

PHASE I STUDY - PRELIMINARY SYSTEMS ANALYSIS

Model Development

The first phase of the study began with formulating a conceptual model of the red cell regulating system, shown in Figure 2. This highly simplified schematic is meant to convey the basic feedback pathways of the red cell control system. Red blood cells are produced in the bone marrow at a rate depending on blood levels of a hormone, called erythropoietin, which is produced in the kidney. Red cells carry oxygen to the cells throughout the body where the net amount of oxygen present at any moment can best be expressed in terms of the partial pressure in the tissues. The kidney has specialized cells that release erythropoietin at rates depending upon its own tissue pO_2. This system can be better understood by considering two examples that will be presented later in greater detail.

First, consider a decrease in the partial pressure of oxygen in the inspired air such as would occur at high elevations. A decrease in inspired levels of oxygen causes an eventual decrease in tissue oxygen. The kidney responds by producing greater amounts of erythropoietin which stimulates the production of more red blood cells which can then carry more oxygen and this ultimately will tend to normalize the oxygen levels in the tissues.

In the second example, consider events which follow an infusion of red cells into an individual that already has a normal complement of red cells.

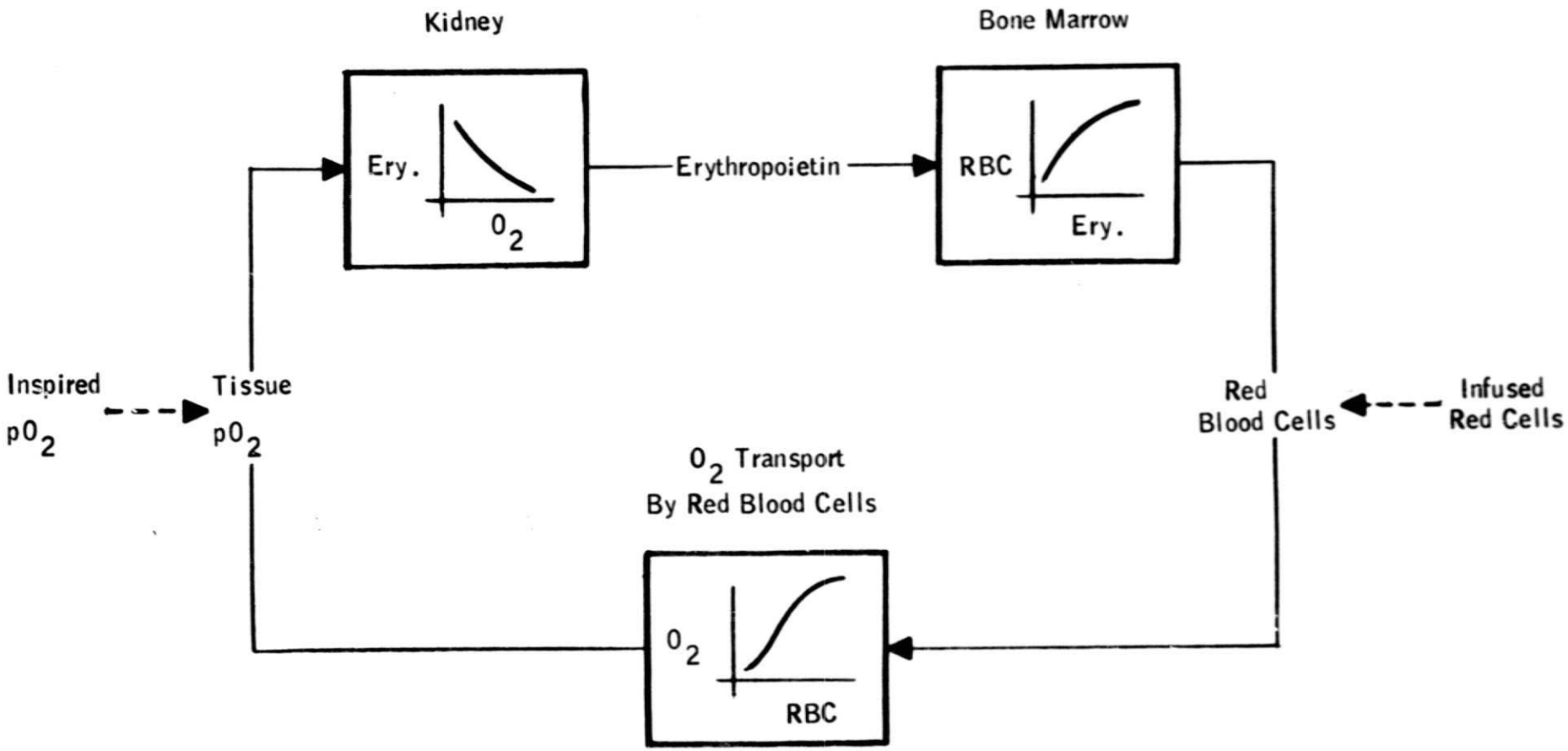

FEEDBACK REGULATION OF TISSUE OXYGENATION
AND RED BLOOD CELL MASS

Figure 2

The abnormally high red cell mass can now deliver more oxygen to the kidney which reduces the output of erythropoetin and suppresses bone marrow production of red cells. Thus, in this case the body is acting to normalize the amount of red cells as well as regulate tissue oxygen. Both of these examples suggest that the controlled variable is not red cell mass, but rather the oxygen level in the tissues, and that the body can either increase or decrease red cell production in response to changes in tissue oxygen.

The actual system, of course, is more complex as suggested by Figure 3. Some of the factors already discussed are the transport of oxygen to the kidneys, erythropoietin release, and bone marrow red cell production. Additional factors include hemoglobin concentration[1], oxygenation of hemoglobin, and distribution of new red cells within the plasma and existing red cells. This diagram suggests that tissue oxygen levels are determined not merely by oxygen supply, but by a delicate balance between oxygen supply and oxygen demand. Two major parameters affecting oxygen supply to the tissue, not shown here, are blood flow and inspired oxygen partial pressure. If these can be considered constant then it should be observed that the kidney tissue acts not only as a receptor for detecting changes in tissue oxygen, but for detecting and responding to changes in hemoglobin concentration (or hematocrit) as well. The fact that the kidney can serve as an hematocrit sensor for eventual control of erythrocyte production turns out to be crucial for an understanding of the events leading to suppression of the red cell mass in weightlessness. This realization was the single most significant result of the first phase of our study. The hemoglobin concentration (or hematocrit) can be changed in only two ways under most circumstances — by a change in total red cell mass or by a change in the plasma volume in which the red cells are mixed.

---

[1] Hemoglobin is the molecule contained within the red cell that carries oxygen. Changes in the blood concentration of hemoglobin can be considered to be identical with changes in hematocrit.

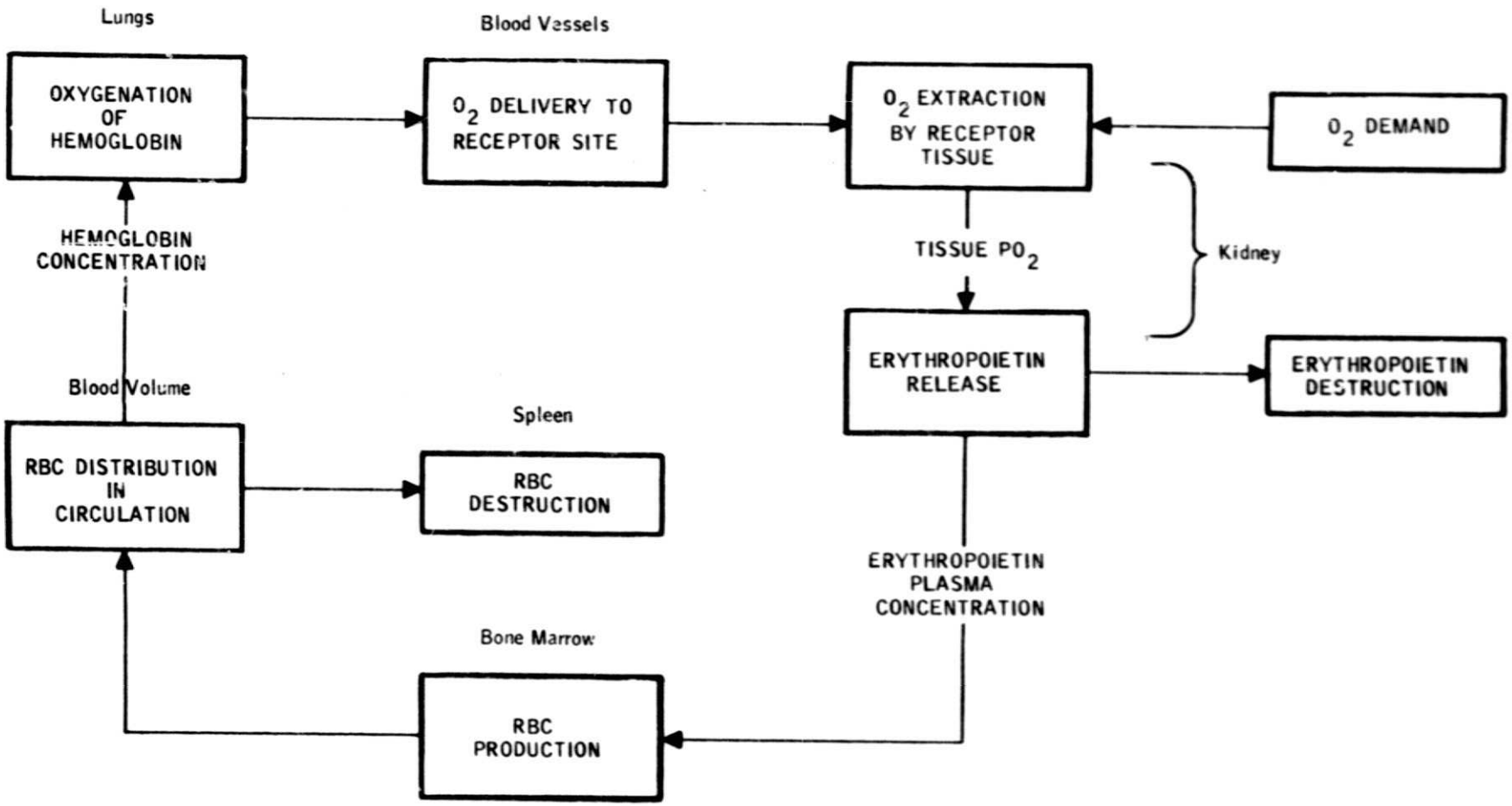

PHYSIOLOGICAL SYSTEMS DIAGRAM FOR CONTROL OF ERYTHROPOIESIS

Figure 3

A mathematical model of this physiological system was constructed and programmed for digital computer simulation. The analog computer diagram of this model is shown in Figure 4. It should be noted that the model is a relatively simple one containing just two differential equations, several nonlinear functions and less than a dozen parameters. A more complete description of the model is available from the author[4]. The independent parameters of major physiological significance are shown on the outside of the largest box with arrows pointing inward.

Sensitivity Analysis

Figure 5 shows the relative importance of these parameters as determined by a sensitivity analysis as well as showing that these parameters can be disturbed in certain pathological conditions or experimentally manipulated. Thus, this basically simple model has the capability of simulating the hematological response to a wide variety of physiological and clinical stresses.

The sensitivity analysis verified that the model responds properly in a gross sense and also predicted the relative importance of these parameters. The sensitivity coefficients were obtained by varying each parameter, one at a time, by small increments around a normal steady-state. The values shown for each parameter is the percent change in red cell production rate caused by a +1% change in the value of the parameter. The values shown were obtained at the end of the first simulated day. The coefficients all changed somewhat with time, but at the end of 30 simulated days their relative order of importance was not different from that shown.

Hypothesis Formulation

Assuming that the simulation model was a reasonably accurate analog of the real system, we then asked the question, "which of the model parameters are likely candidates for causing the decrease in red cell mass observed

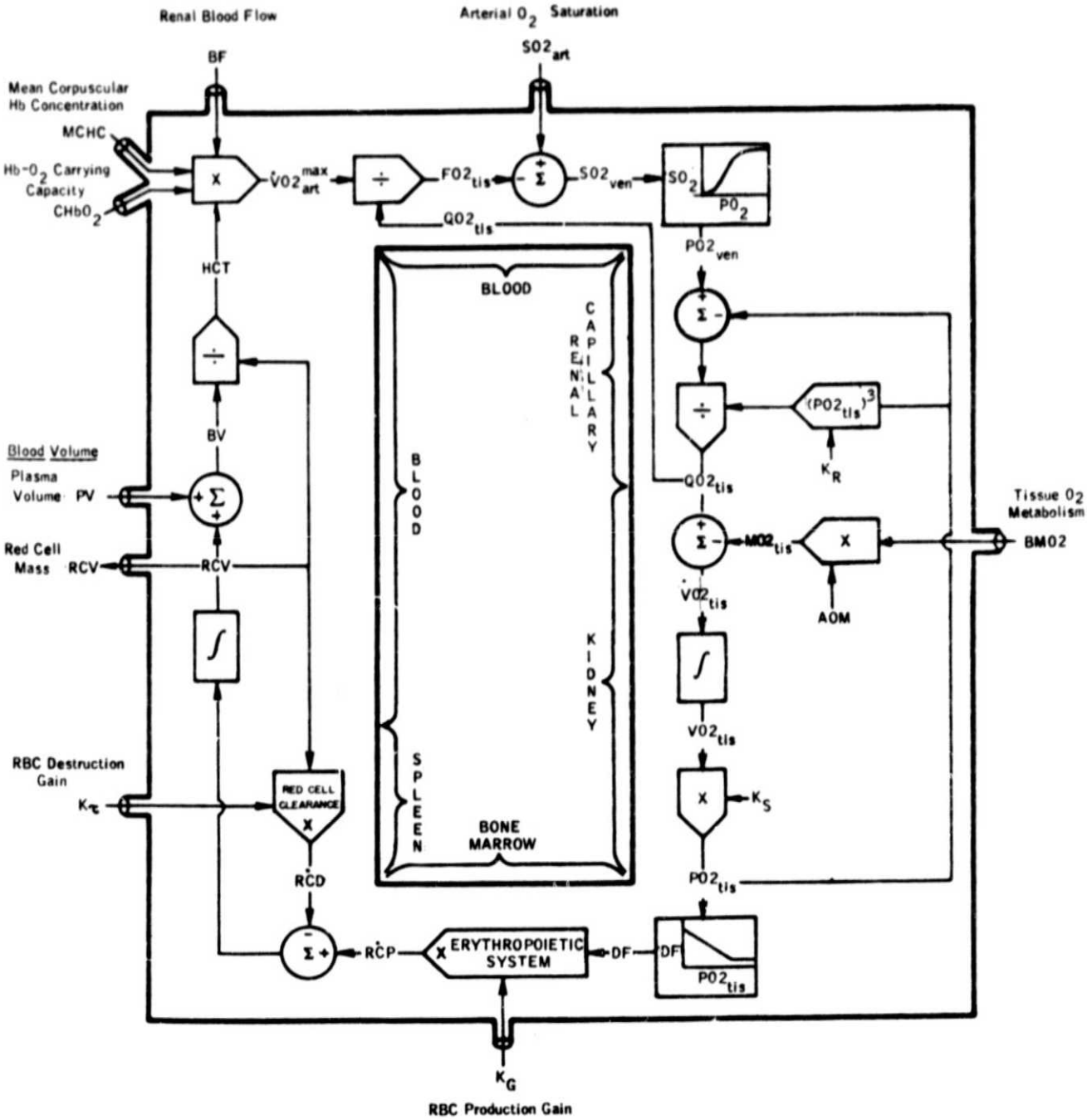

COMPUTER DIAGRAM OF MODEL FOR CONTROL OF ERYTHROPOIESIS

Figure 4

EFFECT OF MODEL PARAMETERS ON RED CELL PRODUCTION RATE
SENSITIVITY COEFFICIENTS FOR $\Delta = +1\%$ @ $t \approx 0$

PARAMETER	SENSITIVITY COEFFICIENTS	PHYSIOLOGICAL/CLINICAL EVENT CAUSING CHANGE IN PARAMETER
• O_2 Demand	4.90	Hypo-/Hyper Thyroidism, Starvation
• O_2 Supply		
- Mean Corpuscular Hb Concentration	-1.50	Abnormal Hb Synthesis, RC Membrane Disorders
- Hb - O_2 Carrying Capacity	-1.50	Sickle Cell Anemia, CO Poisoning
- Blood Flow	-1.50	Postural Change/Exercise/Hemorrhage
- PO_2, Arterial	-1.17	Hypoxia, Hyperoxia, Lung Obstruction
• Red Cell Production Gain Constant	1.00	Hormonal Changes/Anemias/Fe Deficiency
• Plasma Volume	0.83	Bed Rest, Weightlessness, Dehydration
• Red Cell Destruction Gain Constant*	0	Hemolytic Anemia, Hyperoxia

*Increases to 0.5 at long times

Figure 5

in Skylab?". The sensitivity analysis provided a framework for answering this question. The predicted sensitivity of each parameter on red cell production was reconsidered in the light of known physiological function. For example, renal oxygen demand was predicted by the model to have the greatest sensitivity on red cell production. However, in contrast with all other body organs, the oxygen demand in the kidney is more or less proportional to blood flow.[5] Thus, while an increase in renal blood flow may increase oxygen supply, there is a proportional increase in oxygen demand and the balance between oxygen supply and demand (the important factor controlling erythropoietin production) remains relatively constant. In addition, renal blood flow is known to be under a high degree of autoregulatory control. These considerations and others (such as no measurable changes in thyroid function) suggest that changes in renal oxygen demand cannot account for a suppression in red cell production.

Each of the parameters identified by the systems analysis were similarly evaluated to determine whether a reduced gravity environment could cause a change from its preflight value. The results of manned space flight experiments were reviewed as well as experimental analogs of long term weightlessness, such as water immersion and bed rest studies. This systematic approach led to the elimination of all but two relatively sensitive parameters — the plasma volume and renal blood flow. An hypothesis diagram (Figure 6) was constructed which suggested how exposure to the space flight environment might lead to changes in plasma volume and renal blood flow and, using the red cell model as a guide, how these changes ultimately may lead to suppression of red cell production. This chain of events is initiated, in the case of plasma volume changes, by rapid increases in hematocrit. The changes leading to a decrease in plasma volume are generally understood and accepted, but whether long term changes in renal blood flow occur as postulated are not known at this time. For that reason, the remainder of

Figure 6

HYPOTHESES TO EXPLAIN DECREASED RED CELL MASS DURING SPACE FLIGHT

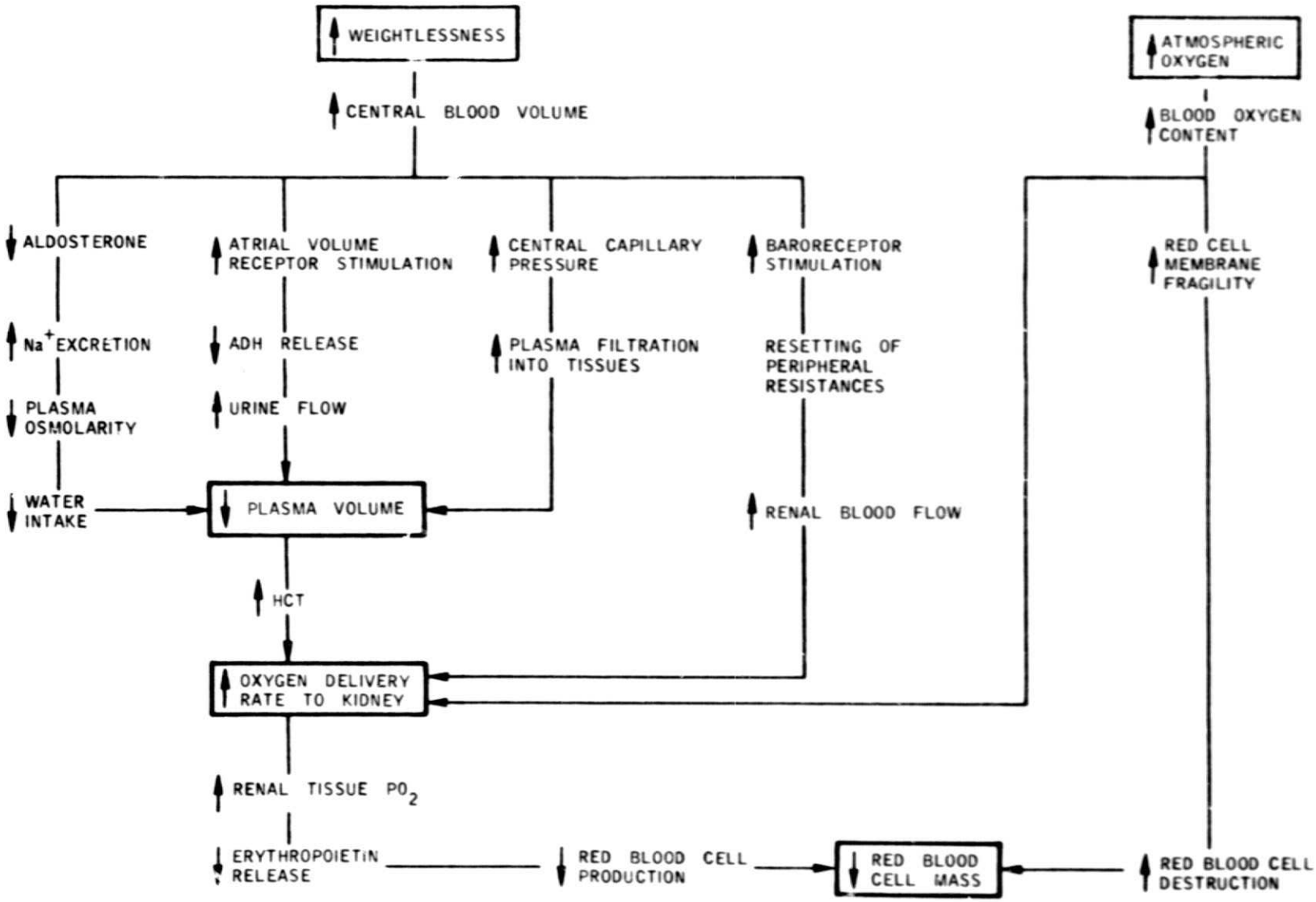

this study focused on whether changes in plasma volume alone could account for the observed suppression of red cell mass. (Increases in ambient oxygen levels are included in Figure 6 merely for completeness to include the situation existing during the earlier Gemini and Apollo flights. They do not apply to the Skylab experience.)

Thus, in a qualitative fashion we had used systems analysis techniques to rather rapidly arrive at a testable hypothesis that could explain the hematologic response to weightlessness.

PHASE II STUDY - MODEL VALIDATION

Some time after the Skylab program was completed and the data had been through preliminary analysis, it appeared that insufficient data was collected in flight to provide a definitive explanation for the red cell decrements.[3] At that time, we were requested to intensify our simulation efforts towards the solution of this problem. It was felt that the conclusions reached during our Phase I study warranted a more quantitative approach including an appropriate model validation analysis. However, the data necessary to properly validate the model for weightlessness were not available. This situation could be somewhat resolved, we believed, by using 1-g studies relevant to this zero-g problem. Therefore, a thorough literature review was performed in search of well-documented studies suitable for validation. This approach required a greater depth of familiarity with the subject matter than we originally anticipated, but resulted in the analysis of a group of physiological problems not previously studied by simulation techniques.

Hypoxia Simulation

The first study that we found suitable for validation was that of hypoxia due to high altitude.[6] The red cell mass is known to slowly but dramatically

increase upon long term exposure to altitude as Figure 7 shows. The major forcing function of this simulation was the change occurring in arterial oxygen partial pressure due to the change in altitude (bottom curve). The measured changes in plasma volume were also used as an input stimulus, but its effect on the overall response was relatively insignificant. The model was able to simulate these experiments with excellent agreement and with a minimum effort devoted to parameter estimation. It can be seen that the response of the system is very slow; this experiment lasted six months at altitude followed by three months at sea level. In addition to predicting the measured dynamic changes of red cell mass and hematocrit, the model was able to predict other system variables that were not measured such as red cell destruction and production rates. It might be mentioned that this long term study and others such as those described below are difficult to perform and are relatively scarce.

One of the more interesting aspects of this simulation study turned out to be not the ascent to altitude but rather the descent back to sea level. At normal altitudes the subjects were breathing air at ordinary oxygen levels, but their red cell mass was considerably elevated as was their hematocrit. If our original systems analysis was correct, we predicted that the kidney should behave as a hematocrit sensor when other factors influencing oxygen supply and demand are relatively constant. Thus, it would be expected that under these conditions a high hematocrit would suppress production and allow the hematocrit to seek a more normal level. This was in fact shown to occur in the simulation.

Red Cell Infusion Simulation

If an increase in hematocrit due to a previous hypoxic exposure could lead to suppression of red cell production, it seemed reasonable that the same type of suppression should occur if hematocrits were increased merely by

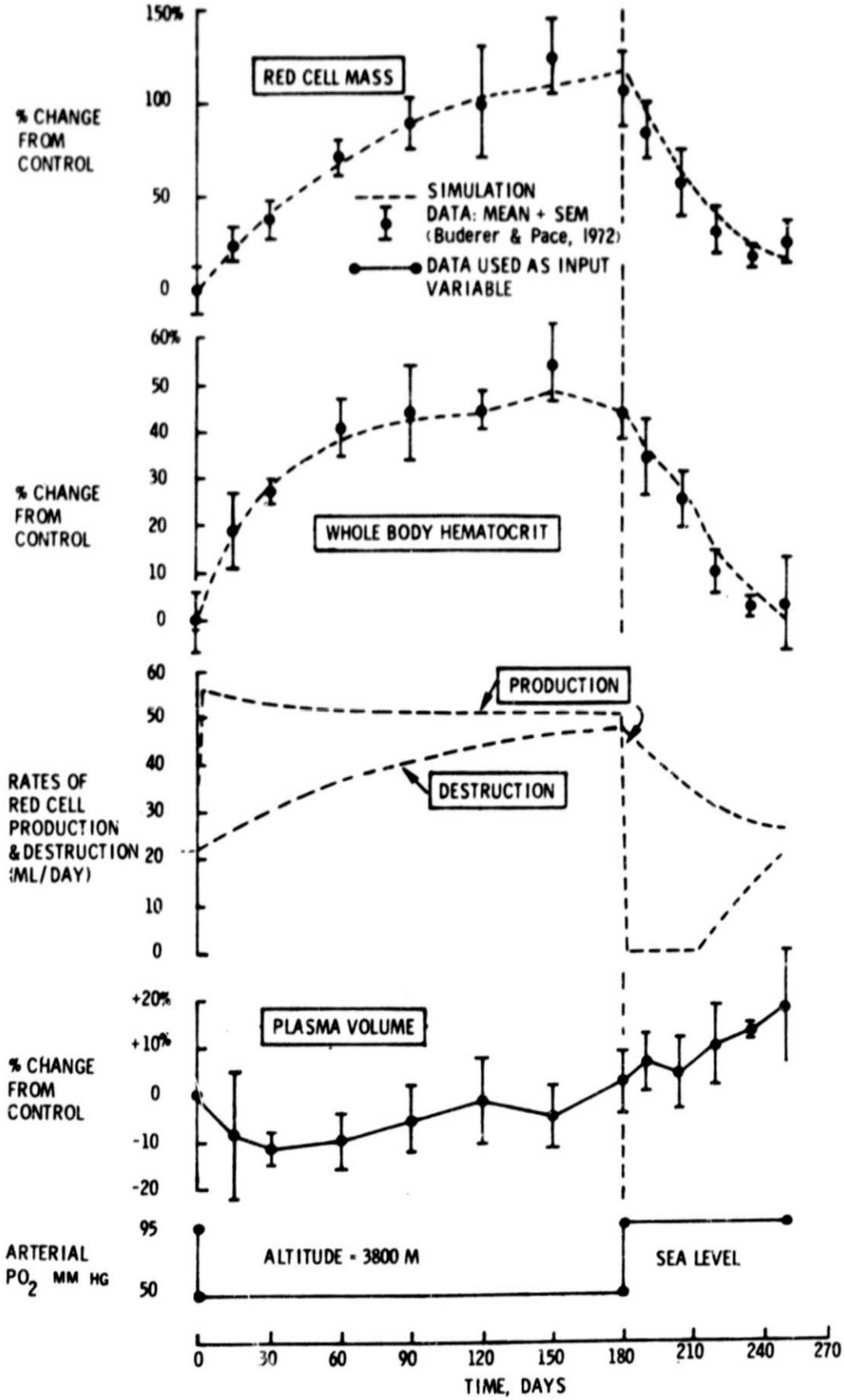

EFFECT OF LONG TERM ALTITUDE EXPOSURE AND DESCENT ON RED CELL REGULATORY SYSTEM SIMULATION VS DATA

Figure 7

infusing additional red cells. Another search in the literature turned up a long term experiment of this nature performed more than 25 years ago,[7] a year or two before erythropoietin was even discovered. The results of that experiment are summarized in Figure 8.

At the start of the experiment a large quantity of red cells were infused into a normal subject. During the course of the 120-day experiment, the infused red cells died out as expected since 120 days is the average life span of a red cell. This is shown in both the upper and lower graph. More important, however, is the observation that the expected increase in hematocrit at the time of infusion apparently leads to a suppression of production of the recipient's red cells. During the first 40 or 50 days the recipient's red cell mass is observed to decrease to a minimum value. The suppression of production continues until after the hematocrit reaches normal levels at which time the recipient's red cell mass begins to increase. This would be an expected response if we regard the erythropoietic system as a hematocrit regulator.

The model was able to simulate these interesting dynamic responses quite faithfully as shown in Figure 9. The simulation results are quite similar to the experimental results both with regard to magnitude and time course of the changes in hematocrit, disappearance of infused red blood cells, and suppression and recovery of the recipients red cell mass. Moreover, the model was able to predict the time course of the changes in production rate which, in this case, is a mirror image of the hematocrit time profile.

Bed Rest Simulation

In order to support our original working hypothesis (Figure 6), it was now required to show that red cell production could be suppressed by an increase in hematocrit — initiated not by an increase in red cells, but by a

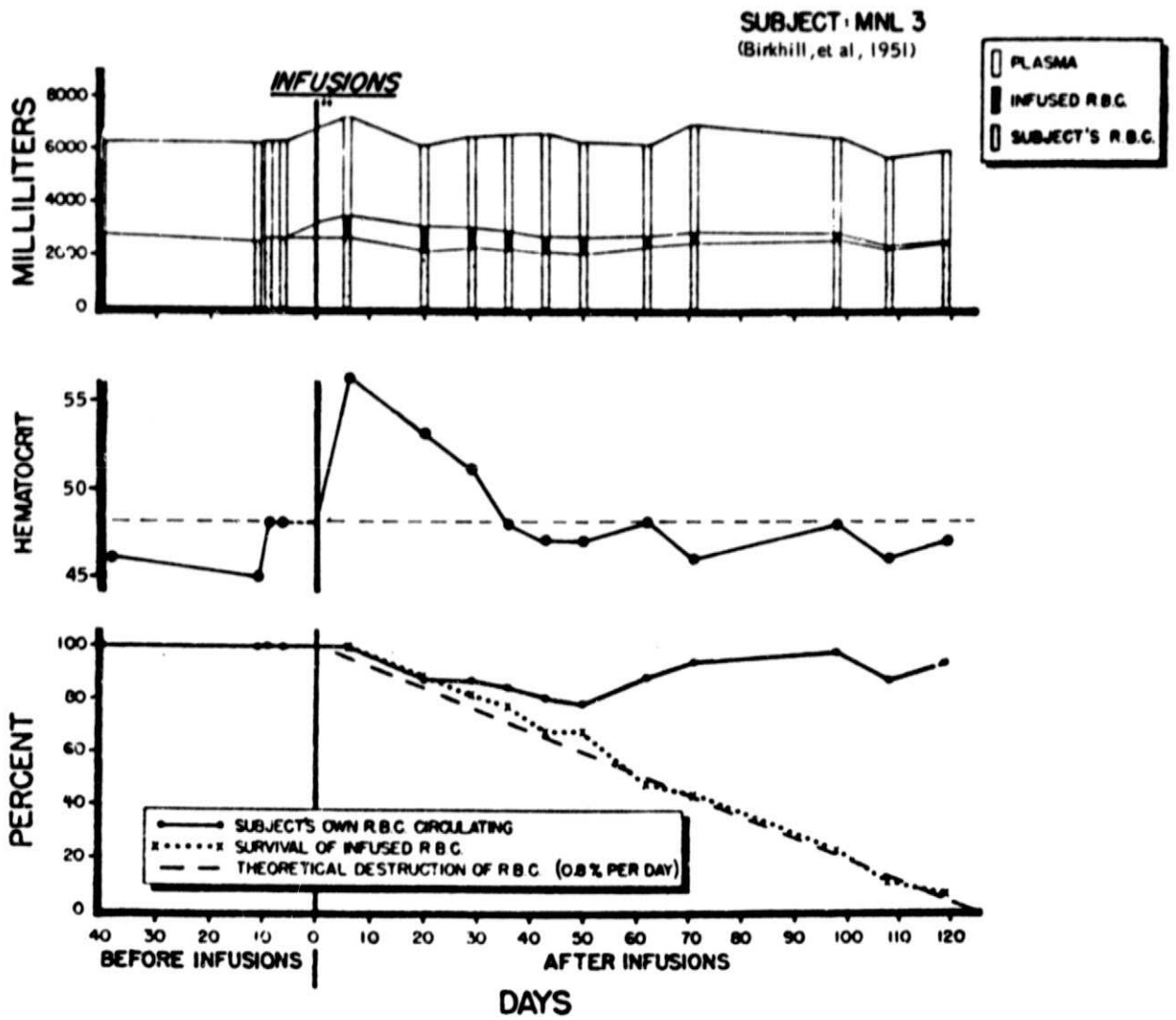

RESPONSE OF A NORMAL SUBJECT MADE POLYCYTHEMIC BY RED CELL INFUSIONS

Figure 8

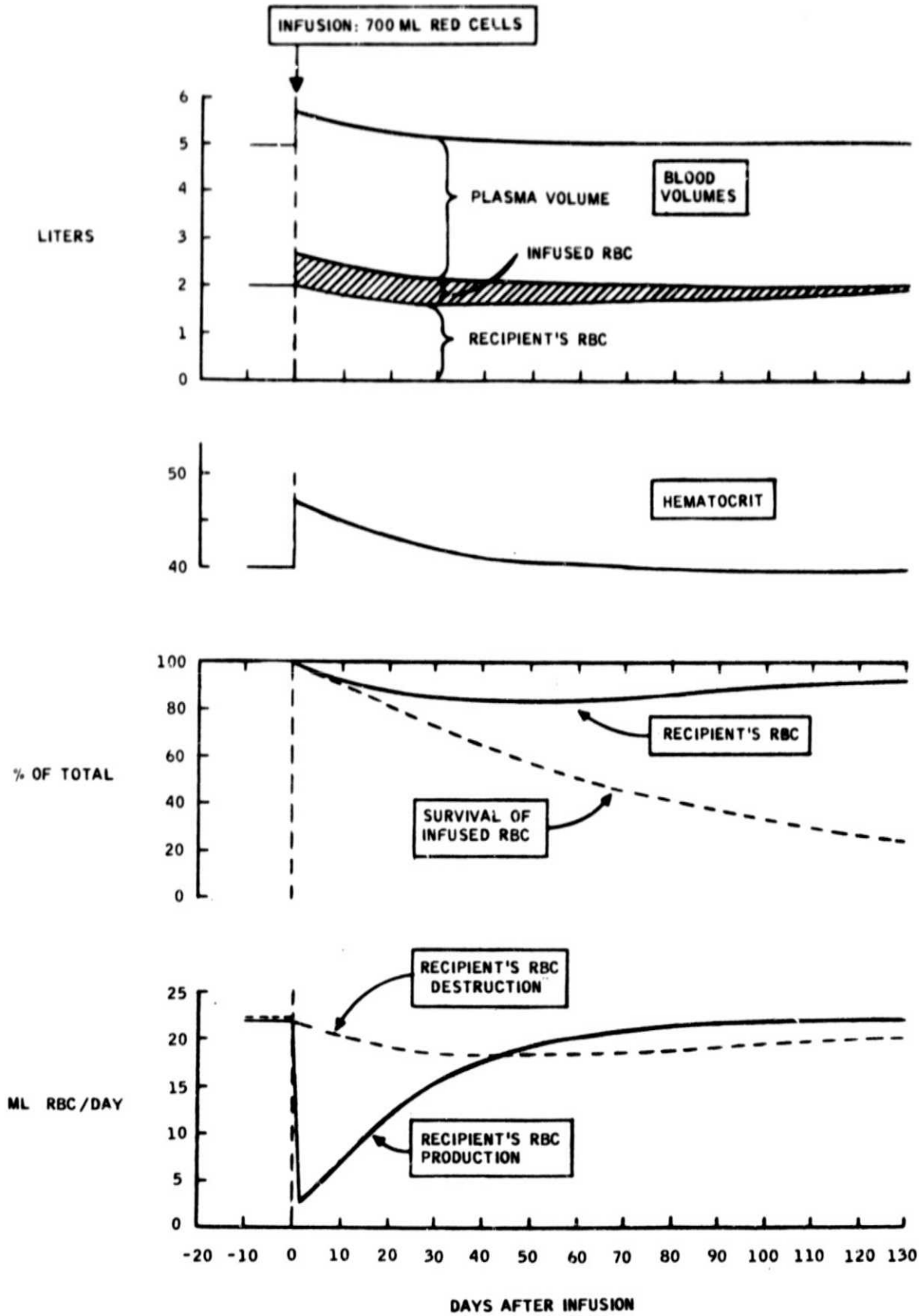

SIMULATION OF POLYCYTHEMIA RESPONSE INDUCED BY RED CELL INFUSION

Figure 9

decrease in plasma volume. The model would be expected to regard these two apparently different stresses as being nearly identical, but this must be confirmed in the real system.

It was quickly discovered that long term suppression of plasma volume is difficult to bring about experimentally in healthy subjects. This undoubtedly has been a major factor contributing to the lack of understanding of the present problem. The plasma volume very tenaciously and very rapidly attempts to maintain normal levels when disturbed. In fact, there are probably only two major experimental stresses that can be used for long term suppression of the plasma volume by moderate amounts. One of these is weightlessness and the other is bed rest.

If a person assumes a completely supine position for 24-48 hours, their plasma volume will fall by 10-20 percent.[8] In fact, since the supine position results in a reduction of the hydrostatic fluid gradients in the body, bed rest has been used as an experimental analog to weightlessness and many of the physiological responses are quite similar. However, any decrease in red cell mass as a result of bed rest would not be measurable for at least several days since normal red cell destruction takes place rather slowly (at a nominal rate of 1% of original red cells per day). Many bed rest studies have documented significant decreases in red cell mass, but only a few of these experiments have been carefully performed and none have demonstrated the precise mechanisms involved. One of these — a 35-day bed rest study[9] — is shown in Figure 10 along with the simulation response to the same stress.

The experimental results describes the sudden and sustained decrease in plasma volume that occurs within 48 hours as well as the expected rise in hematocrit. The model, using the measured plasma volume as the only forcing function, demonstrates once again that the results can be explained by assuming that red blood cell production rates are governed by an effective hematocrit sensor. When hematocrits increase, the red cell production

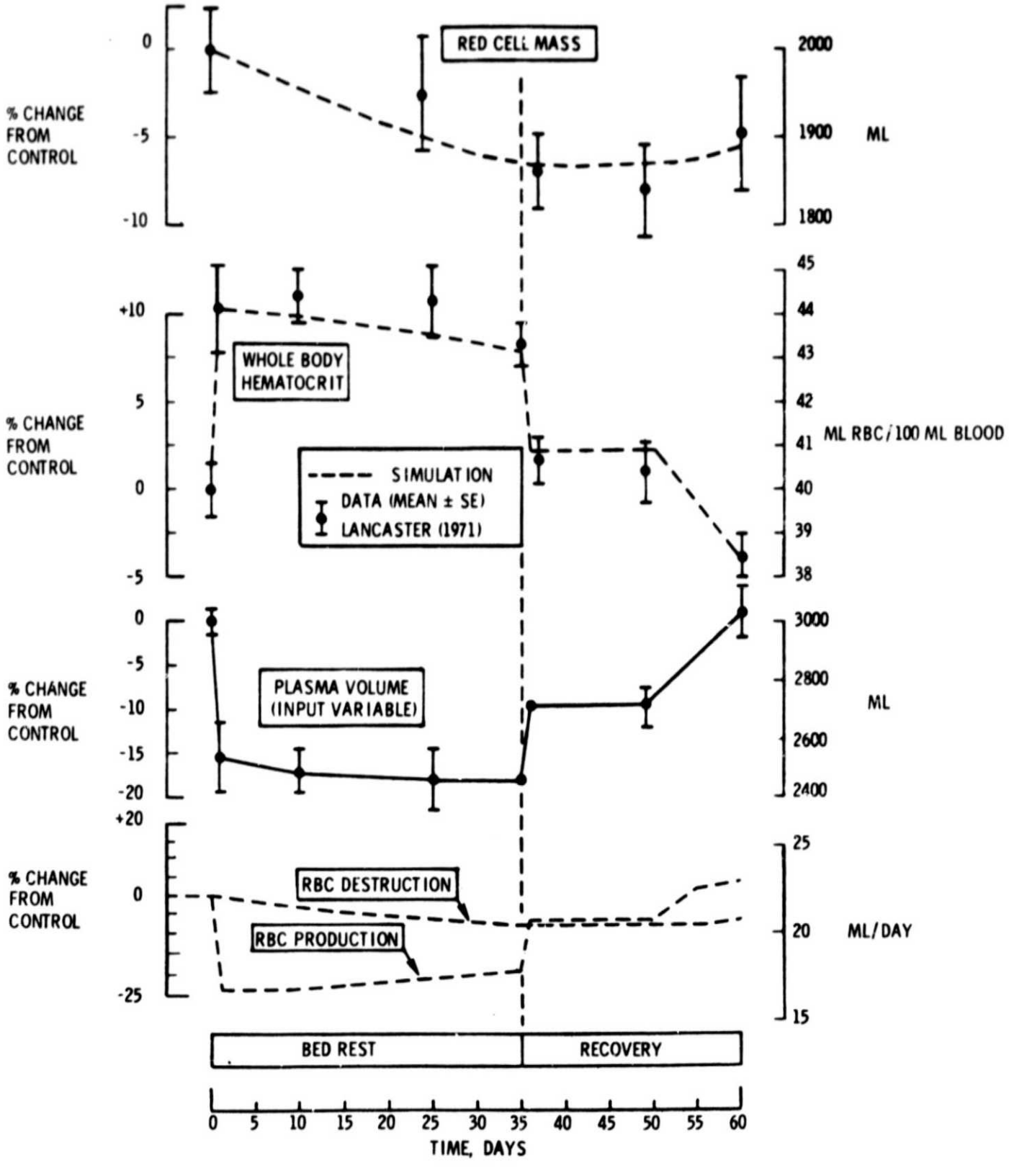

EFFECT OF LONG TERM BEDREST AND RECOVERY ON RED CELL REGULATORY SYSTEM SIMULATION VS DATA

Figure 10

rates decrease leading to a gradual reduction in red cell mass. At the end of bed rest, the subjects are ambulatory and plasma volumes begin to rise, causing the hematocrits to return toward normal, the production rates to increase, and the sluggish red cell system to slowly increase its cell mass.

Parameter Estimation

The agreement between simulation and experimental data presented in this paper was achieved by adjusting a single parameter in each case — the gain constant for erythrocyte production. The best estimate for this parameter for each of the stresses considered is shown below:

STRESS	VALUE OF GAIN CONSTANT (ml red cell/mm Hg pO_2) production
Hypoxia	
- Ascent phase	-10×10^{-3}
- Descent phase	-36×10^{-3}
Red Cell Infusion	-36×10^{-3}
Bed Rest	-15×10^{-3}

It could be argued that this gain constant, representing the sensitivity of the bone marrow to changes in renal oxygen pO_2, should have a value independent of the stress on the body. However, there are several reasons why this might not be true. In the first place, the direct measurement of this parameter has never been accomplished in the real system. Therefore, little quantitative information is available to estimate its variability under different conditions. Secondly, due to simplifications in the model, this gain constant really is a lumped parameter representing the effects of several factors not considered explicitly in these simulations (such as changes in oxygen-hemoglobin affinity, erythropoietin production gain constants and metabolic

clearances). There is good reason to suspect that some of these factors undergo change during some of the stresses considered in this study. This suggests that an effort should be made to separate out these effects in the model. And finally, it should be recognized that while the studies on which these validations were based are among the best available in the literature, they include enough variation with regard to species difference and experimental method that by themselves may explain the differences seen in the table above. For example, the hypoxia study was performed on pig-tailed monkeys rather than humans; the red cell infusion study was completed years before more accurate radioactive tracer techniques to measure red cell mass were available, and the bed rest study did not apparently include independent measurements of red cell mass and plasma volume which is essential in studies of this type.

DISCUSSION

Weightlessness Simulation

We have only just begun simulations of weightless space flight using Skylab data for parameter estimation. The results look very encouraging, but are not ready to be presented at this time. As mentioned, no measurements of red cell mass or plasma volume were obtained during the inflight portion of the Skylab missions. The existing data does, however, suggest that weightless space flight appears to mimic the bed rest response and the systems analysis would suggest that the mechanisms and feedback pathways are identical in both cases. Nevertheless, this has yet to be confirmed. Certain observations during the third month of flight and during recovery cannot apparently be explained by the simplified analysis presented here. For that reason, a second generation model has already evolved (Figure 11). Final validation of a model describing the long term weightlessness response may have to await the next century when manned flights longer than 30 days will be flown.

Figure 11

CONCEPT FOR AN IMPROVED ERYTHROPOIESIS MODEL

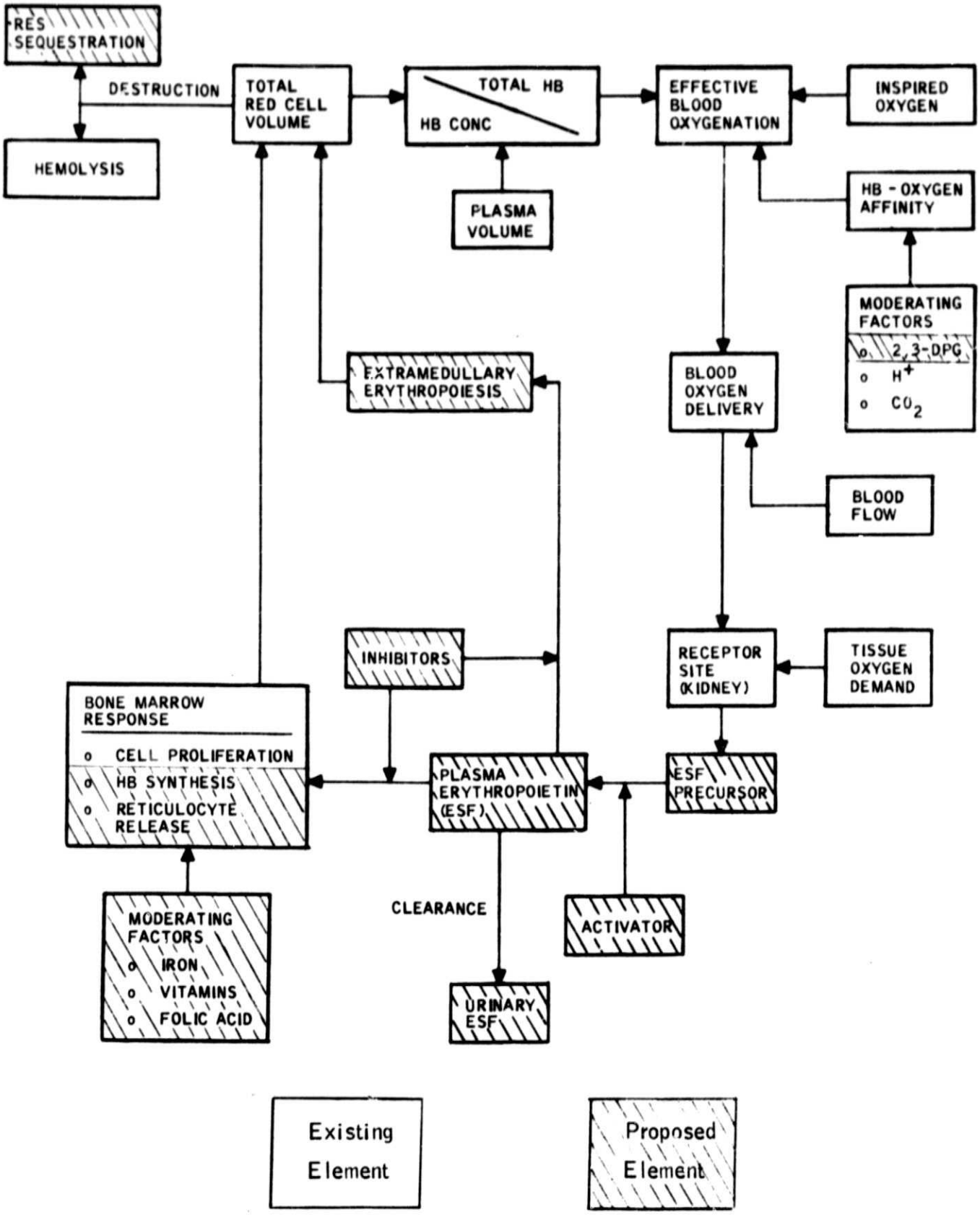

We have performed the preliminary studies described here to ensure that we would begin simulating the Skylab mission with a reasonably validated model. We have shown that the model, both the conceptual model and simulation model, provides a convenient framework on which to demonstrate the commonality between such diverse stresses as descent from altitude, red cell infusions, bed rest, and weightlessness. The results of this study suggest that all of these stresses induce an increased blood hematocrit leading to tissue hyperoxia and eventual inhibition of the erythrocyte producing circuit until the hyperoxic condition is relieved. The erythropoietic system is acting, in these situations, as if it were an hematocrit sensor and regulator. In these terms the decreases in red cell mass during Skylab may possibly be explained in terms of normal feedback regulation of the erythropoietic system in the face of sustained decreases in plasma volume.

Validation Guidelines

We have learned some lessons during the study that have helped improve communication between simulationist and subject matter expert during the validation process. At the risk of restating some obvious truisms, I have listed some of these guidelines which could be applied to many other studies:

1) A sensitivity analysis is very useful when performed early in model development, prior to model validation. This is particularly useful to the subject matter expert who can help evaluate the model based on the relative sensitivities of the parameters without really knowing much about the model. It also is a technique useful for involving the subject matter expert early in the modeling process, another important factor for eventual model acceptance.[10,11]

2) The results of the sensitivity analysis must be evaluated in the light of other known information about the real system. The fact that a parameter has a very sensitive effect on a particular variable of the model

is of little importance if it is known that in the real system the parameter is relatively constant or that changes in other parameters are capable of cancelling out the original effects.

3) In most applications, a system is modeled because of a desire to study a particular (rather than a general) solution or set of solutions. In these cases, development of a working and testable hypothesis should be accomplished at the earliest stage possible. This can often be done during the model formulation stage. This is not a new concept in experimental science, but has not often been applied to simulation studies. The general behavior of even the most complex systems can be reduced to a simple hypothesis chart relating the stimulus to the response. Recognition of all the intermediate steps and dynamic subtleties of the simulation need not be detailed at this stage, but should be added as the simulation studies evolve. In this way, the hypothesis chart becomes modified and refined and serves as a progress record of the study. This step is important for clarifying the biases of the simulationist and is a good communication device between simulationist and experimentalist in terms with which the latter is familiar.

4) Continual feedback is essential between simulationist and subject matter expert. The factors discussed above are all related to this process. It is extremely helpful for the simulationist to acquaint himself rather thoroughly with the subject matter material.

5) General simulations, sensitivity analyses, or parameter variation studies all performed without comparison with good experimental data appear to make much less of an impact on subject matter experts not familiar with systems analysis than even a single run, on a model previously validated with a single set of data, showing reasonably good agreement with a second set of data. It was found that if a model is well

understood, intuition can often serve to replace simulation, but that the validity of that intuition can best be conveyed to others by demonstrating the validity of the model on which it is based.

6) Mutual respect and credibility are the hallmarks of a team approach to building a successful model. It is imperative that the simulationist be scrupulously honest with his customer regarding the ability of the model to simulate (or failure to simulate) certain events. In addition to avoiding unnecessary embarrassments later in the project, this pathway will lead to a better and freer exchange of ideas and hence to a better model. It should be the responsibility of the simulationist to dispel a common notion among non-simulationists that all models are capable of simulating any set of data merely by adjusting parameters. But just as important, it is our responsibility to convey the very real limitations and characteristics of the modeling process[12] (i.e., no model is ever a perfect fit to reality, deductions based on a model must be regarded with appropriate suspicion, distinguish at all times between the model and the real world, etc.)

ACKNOWLEDGEMENT

This work was sponsored by the National Aeronautics and Space Administration (Contracts NAS9-12932 and NAS9-14523).

REFERENCES

1. Kimzey, S. L. "The effects of extended spacelight on hematologic and immunologic systems". J. Amer. Med. Women's Assn. 30:218-232 (1975)

2. Berry, C. A. "Summary of medical experience in the Apollo 7 through 11 Manned Spaceflights". Aerospace Medicine, 41: 500-519 (1970).

3. Johnson, P. C., Driscoll, T. B. and LeBlance, A. D. "Blood volume changes", in: Proc. Skylab Life Science Symposium Vol. II, NASA TMX-58154, National Aeronautics and Space Administration, Lyndon B. Johnson Space Center, Houston, Texas, 77058, pp. 495-505 (1974).

4. Leonard, J. I. "The application of systems analysis and mathematical models to the study of erythropoiesis during space flight", General Electric Report No. TIR 741-MED-4012, General Electric Company, P. O. Box 58408, Houston, Texas, 77058 (1974).

5. Pitts, R. F. "Physiology of the Kidney and Body Fluids", 2nd Ed., Year Book Medical Pub., Chicago, 1968.

6. Buderer, M. C. and Pace, N. "Hemopoiesis in the pig-tailed monkey Macaca nemestrina during chronic altitude exposure", Amer. J. Physiol. 223: 346-352, (1972).

7. Birkhill, F. R., Maloney, M. A. and Levenson, S. M. "Effect of transfusion polycythemia upon bone marrow activity and erythrocyte survival in man", Blood, 6: 1021-1033 (1951).

8. Johnson, P. C. Fischer, C. L. and Leach, C. "Hematologic implications of hypodynamic states", in Hypogravic and Hypodynamic Environments, NASA SP-269, National Aeronautics & Space Administration, Washington, D. C., pp. 27-34, 1971.

9. Lancaster, M., "Hematologic aspects of bed rest", in Hypogravic and Hypodynamic Environments, NASA SP-269, National Aeronautics and Space Administration, Washington, D. C., pp. 299-308, 1971.

10. Miller, D. R., "An experiment in sensitivity analysis of an uncertain model", Simulation 23: 101-104 (1974).

11. Miller, D. R. "Model validation through sensitivity analysis" in Proc. Summer Computer Simulation Conf. 1974, pp. 911-914.

12. Golomb, S.W. "Mathematical Models - uses and limitations", Simulation, 14: 197-198, (1970).