REAL-TIME ONBOARD GEOMETRIC IMAGE CORRECTION

Walter Discenza and Georges Frippel

General Electric Space Division

ABSTRACT

This paper describes a system to perform real time onboard geometric correction of Landsat D resolution satellite imagery. System requirements, algorithms, sensors, and other hardware components are defined. Feasibility of implementing the correction process is demonstrated using Kalman filter techniques to incorporate information from onboard ephemeris (GPS), attitude control (MACS) and ground control points. Random access sensor systems, such as Charge Injected Devices (CID) and Charge Coupled Devices (CCD), are used to obtain pixel values at desired ground locations, thus greatly reducing the data processing requirements.

Real-Time Onboard Geometric Image Correction

by

Walter Discenza and Georges Frippel
General Electric Space Division

The results presented are from a study that is currently in progress to extend and further develop an alternate approach to performing geometric image correction and registration using a technique conceived in a previous study performed by GE (Ref. 1) (See Figure 1).

A brief overview of the need for geometric image compensation is provided followed by an explanation of the alternate approach. A discussion of possible implementation approaches for this new concept is provided followed by the development of a conceptual design based on current Landsat-D requirements (for baseline purposes only) (See Figure 2).

For the purposes of this presentation, we classify geometric image distortions as deterministic or non-deterministic (See Figure 3). The deterministic errors are assumed to be known apriori and removed by appropriate processing. Only the non-deterministic or time varying errors related to such items as alignments variation, ephemeris uncertainty, attitude control pointing errors, sensor distortion or warping and mapping projections transformations must be identified and compensated as the data becomes available. The magnitude of these effects can vary over wide ranges such as the ephemeris determination using GPS (10 meters) to the uncertainty from the standard ground tracking system (256 meters). Even with such improvements, the anticipated achievable accuracy is still several hundred meters and the required performance less than 10 meters. Investigation and previous experience have indicated that by using ground control point (GCP) correlation the desired accuracy can be achieved.

The Landsat-C and proposed Landsat-D geometric image correction and registration approaches both utilize resampling and interpolation to perform the correction function (See Figure 5). A real-time operating environment eliminates or severely restricts the ability to use resampling techniques. The proposed alternate approach ("Smart Sensor") uses an over-sampled two-dimensional image plane and a Kalman filter-driven direct readout controller to eliminate the need for interpolation and resampling. The level of over-sampling is selected to provide an acceptable level of error using the nearest neighbor approach.

The differences between the approaches currently in use and the "Smart Sensor" can be vividly seen by considering an example where the center of the output pixel is not on the input or measurement data grid (See Figure 4). To obtain the value of the output pixel, a horizontal interpolation must first be performed to construct several values along the output grid line on which the desired pixel lies. These constructed points

are then used to perform an interpolation in the vertical direction to obtain the desired value. In the "Smart Sensor" approach, the high density of sub-pixel detector elements coupled with the correction coefficients derived from the Kalman filter allows the value at the desired point to be read out directly. Improvements in the achievable signal-to-noise ratio can be obtained by utilizing the output of several detectors centered about the desired point.

Several trade off studies were conducted to establish a preferred approach (See Figure 6 and 7). The "push broom" (MLA) or a long cross track image plane that is moved along the ground track by the spacecraft velocity was found to be preferred to a "whisk broom" (Thematic mapper) approach, since it eliminates the errors associated with mirror scan repeatibility (7 meters RMS),potentially one of the largest Landsat-D error sources, and is not S/N or sampling rate constrained.

The "push broom" approach may be implemented using either a one (linear) or two (matrix) dimensional array of detectors (See Figure 8). The matrix approach was determined to be superior, since it eliminates the need for large buffer memories, significantly reduces the amount of software processing required to construct a pixel, and is not oversample or sub-pixel limited along-track by maximum sample rate signal-to-noise considerations. Re-set residuals can be eliminated by using double correlated reads, however, this increases the sampling rate by a factor of two. The main area of concern is whether fabrication technology will be available to allow the manufacturing of such large scale detector arrays.

These detector arrays can be implemented using photo diodes, charge coupled devices (CCD) or charge injection devices (CID) (See Figure 9). Although there are many similarities, the CID appears to offer the most direct or easiest implementation. The photo-diodes require additional circuitry to provide a select read capability which effectively produces a 100 micrometer spacing. In addition, the use of a buffer memory is necessary to provide a non-destruct multiple detector per pixel read capability. The CCD can be operated in a time delay integration mode to improve the S/N but this effectively converts the two dimensional array into a single dimension. Thus, this feature cannot be utilized in the current configuration. Investigations have indicated that it might be possible to operate a CCD in the Random access non-destruct read mode but this capability is yet to be fully demonstrated.

The "Smart Sensor" approach appears to be compatible with real-time onboard implementation (See Figure 10). The recursive nature of the Kalman filter sample controller minimizes to quantity of data which must be stored. The question as to the number and frequency of the ground control points required to provide acceptable imaging errors when a new swath is started is yet to be investigated. Trade offs between the number of filter states and the number and frequency of ground control points must be investigated.

The upper part of the block diagram is essentially a top level representation of the multi-mission attitude control system (MMACS).

Evaluating whether GCP correlation errors can be integrated into the MMACS is no trivial task. The first cut approach would probably be to operate these two recursive filter in a semi-independent mode while making the output states of each filter available for use in the other. The primary benefit of improving overall attitude control system pointing performance appears to be associated with auxiliary experiments and not geometric image correction of the primary sensor.

The geometric correction matrix will be based on the Landsat-D configuration without the two states associated with the scan mechanism. Based on previous experience, the size of the GCP reference image has been chosen to be 32 x 32 30 Meter Pixels. Due to the accuracy required, the output of the detectors will probably have to undergo radiometric correction to issue proper GCP selection.

Landsat-D requirements were used to develop an application example in order to insure that a complete set of realistic and consistent specification which reflect current thinking were available. This example is intended to characterize the main features of the approach and highlight some of its salient characteristics (See Figure 11). To meet the specified requirements and provide direct read-out of a scan line, approximately a 6000 by 20 pixel array would be required to provide the ground swatch coverage necessary to account for the maximum errors along-track. An 8 x 8 array of detectors per pixel is required to meet the arbitrary error budget allocations indicated. The values were selected to provide a maximum uncertainty in the recursive filter since its characteristic and convergence properties are not yet defined. The array size or focal plane size appears to be the limiting item for this configuration.

Several sub-studies or analyses were conducted to provide parameteric data on key design parameters (See Figure 12). The required number of detector cells to obtain a desired accuracy using the nearest neighbor approach is based on a uniform distribution RMS error allocation. The Geometric Correction Matrix (GCM) error contribution to cross track error is the result of comparing the actual value with the estimated value for 30 and 90 grid points while varying the time intervals between GCM updates. The signal-to-noise ratio for the CID read out approaches considered, assumed a simplified signal-noise model consisting of the number of carriers due to photons, dark current and amplifier noise. The two extremes were investigated consisting of one set of read out electronics shared among 11 CID chips and one set of electronics per CID chip. The actual design implemented will probably lie somewhere between these two extremes. The depth of the detector array for yaw attitude error is derived from straightforward geometric considerations.

Present technology indicates that a CID chip will contain at least 1000 x 1000 detector cells (See Figure 13). The depth of 1000 cells is more than adequate to account for the worst case variations along track. The main challenge lies in the cross-track layout since for the specified configuration 48,000 detectors or 48 chips are required. The CID chip has

inherently a non-conducting border which prevents the detectors on adjacent chips from being directly abutted. There are several approaches which can be used to circumvent this problem. One way is to use a front to back staggered layout as indicated. This approach produces a fixed known along track displacement error which is deterministic. Based on the arbitrary error allocation of one (1) meter for pixel precision placement, an oversample factor of 8 is required. This oversample factor leads to an image plane size of 48 cm.

There are several approaches available for reducing the size of the required image plane (See Figure 14). If a re-evaluation of the error budget indicates that the recursive filter uncertainty can be limited to 3.67 meters then 2.0 meters could be allocated to pixel placement precision. This 2 meter requirement reduces the oversampling factor to 4, thus cutting the image plane size in half. Alternately, if the error budget were increased to 4.64 meters RMS or the multiple pass pixel to pixel registration requirement eliminated, the required performance could be achieved with an oversampling factor of 4. Other parameters which are directly proportional to the required number of detectors or image plane size are the swath width and pixel size or resolution. Thus, reducing the swath width to 90 KM or increasing the pixel size to 60 x 60 meters or some combination of these two parameters could be used to reduce the required image plane to approximately 20 cm.

The tasks remaining to be investigated include the definition of the recursive filter, the accuracy achievable and required computational capability associated with a specific design, the required number and spacing of GCP points to minimize data loss while the filter is converging to its steady state value (See Figure 15).

Acknowledgements:

This work is being prepared in support of National Aeronautics and Space Administration, Goddard Space Flight Center Contract NAS 5-23412, Amendment 133.

The authors would like to gratefully acknowledge the support of A.J. Fuchs, Contract Administrator and the contributions and assistance of E. Beyer who was the major technical contributor for Task One.

Reference:

Investigations of a Space Data Technology Facility (SDTF) for Spacelab Report #77SDS4267 December 1977. J.D. Welch.

REAL TIME ON-BOARD GEOMETRIC
IMAGE CORRECTION

GENERAL ELECTRIC COMPANY - SPACE DIVISION
PHILADELPHIA, PENNSYLVANIA 19101

Figure 1

- REQUIREMENTS
- "SMART SENSOR" CONCEPT
- IMPLEMENTATION APPROACH
- CONCEPTUAL DESIGN
- SUMMARY AND CONCLUSIONS

Figure 2

- SOURCES
  - VIEWING GEOMETRY (NON-SYSTEMATIC)

ALIGNMENT	- 206.4 METERS
EPHEMERIS	- 10 TO 256 METERS
ATTITUDE CONTROL	- 175.2 METERS

  - SENSOR
  - MAPPING
- LANDSAT D REQUIREMENTS
  - GEODETIC:
    0.5 PIXEL (90%) - 9.12 METERS (RMS)
  - REGISTRATION
    0.3 PIXEL (90%) - 6.08 METERS (RMS)
  - OPERATIONAL
    $6.08/\sqrt{2}$ - 4.3 METERS (RMS)

GROUND CONTROL POINT CORRELATION IS REQUIRED

Figure 3

- CURRENT (LANDSAT C)
  - TWO DIMENSIONAL POLYNOMIAL CONSTRUCTION
  - RE-SAMPLING AND INTERPOLATION
- LANDSAT-D
  - GEOMETRIC CORRECTION MATRIX GENERATED FROM A 17 STATE KALMAN FILTER
  - RE-SAMPLING AND INTERPOLATION
- "SMART SENSOR"
  - OVER-SAMPLED TWO DIMENSIONAL IMAGE PLANE
  - KALMAN FILTER-DRIVEN DIRECT READOUT CONTROLLER

"SMART SENSOR" APPROACH ELIMINATES RE-SAMPLING

Figure 4

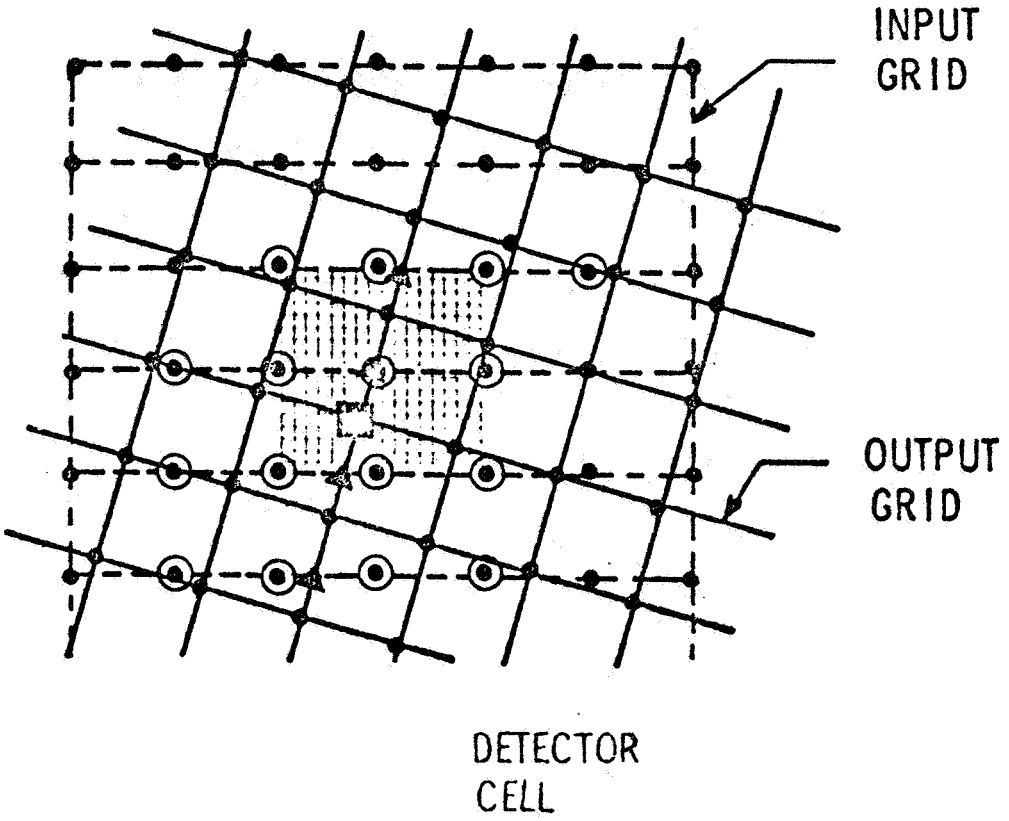

Figure 5

- SCANNING MECHANISMS AND CONFIGURATION
  - WHISK BROOM VS PUSH BROOM
  - LINEAR (WITH STORAGE) VS MATRIX
- TECHNOLOGIES
  - CCD
  - CID
  - PHOTODIODE

Figure 6

- WHISK-BROOM
  - SMALL IMAGE PLANE
  - SMALL NUMBER OF DETECTORS
  - RAPID SAMPLING (~10 μS/16 PIXELS)
  - MIRROR SCAN REPEATABILITY ERRORS (~7M RMS)

- PUSH-BROOM
  - LONG IMAGE PLANE
  - LARGE NUMBER OF DETECTORS
  - DETECTOR OUTPUT VARIATION (RADIOMETRIC CALIBRATION)
  - SLOW PARALLEL SAMPLING (~4 ms/PIXEL)
  - NO MOVING MECHANICAL ASSEMBLIES

PUSH BROOM ELIMINATES THE LARGEST SOURCES OF ERROR

Figure 7

- LINEAR ARRAY
  - LARGE MEMORY (120K BYTES)
  - ALL DETECTOR PROCESSING DONE IN THE COMPUTER (EXECUTION TIME)
  - SAMPLING AND READOUT LIMITED ALONG TRACK
  - RESET RESIDUALS
- TWO DIMENSIONAL ARRAY (MATRIX)
  - SLOW PARALLEL SAMPLING (~4 ms/PIXEL)
  - MAXIMUM OF 6K MEMORY REQUIRED
  - NO MEMORY REQUIRED WITH RANDOM ACCESS NON DESTRUCTIVE READ
  - IMPROVED S/N BY USING MULTIPLE DETECTORS PER PIXEL
  - VARIATION IN DETECTOR OUTPUT (RADIOMETRIC CALIBRATION)
  - DEPTH OF ARRAY DEPENDS ON OVERALL SYSTEM CONSIDERATIONS

A FABRICATION TECHNOLOGY VS A COMPLEX PROCESSING SOLUTION

Figure 8

- PHOTODIODES
- CHARGE COUPLED DEVICES (CCD)
- CHARGE INJECTION DEVICES (CID)
- SIMULARITIES
  - MULTIBAND CAPABILITY
  - RESPONSE IN 0.4 TO 1.1 MICRON RANGE
  - CONFIGURED IN A MATRIX LAYOUT
  - SUBJECT TO RESET NOISE, THERMAL OR DARK CURRENT, LEAKAGE CURRENT, PREAMPLIFIER NOISE, PATTERN NOISE AND CROSSTALK
- DIFFERENCES

DEVICE	DETECTOR SPACING		DETECTOR AND ADDRESSING CIRCUITRY	COMMENTS
	CURRENT	FUTURE		
PHOTODIODES	10-15	-	100	POOR RESOLUTION DUE TO LARGE SPACING REQUIRES BUFFERING AND MEMORY
CCD	20-30	10-15	SAME AS DETECTOR	INHERENTLY NOT RANDOM ACCESS, REQUIRES LARGE BUFFER MEMORY OR COMPLEX TECHNIQUES. TIME DELAY INTEGRATION NOT COMPATIBLE WITH MATRIX APPROACH
CID	20-30	10-15	SAME AS DETECTOR	INHERENT RANDOM ACCESS NON DESTRUCTIVE READ CAPABILITY

CID OFFERS EASIEST IMPLEMENTATION

Figure 9

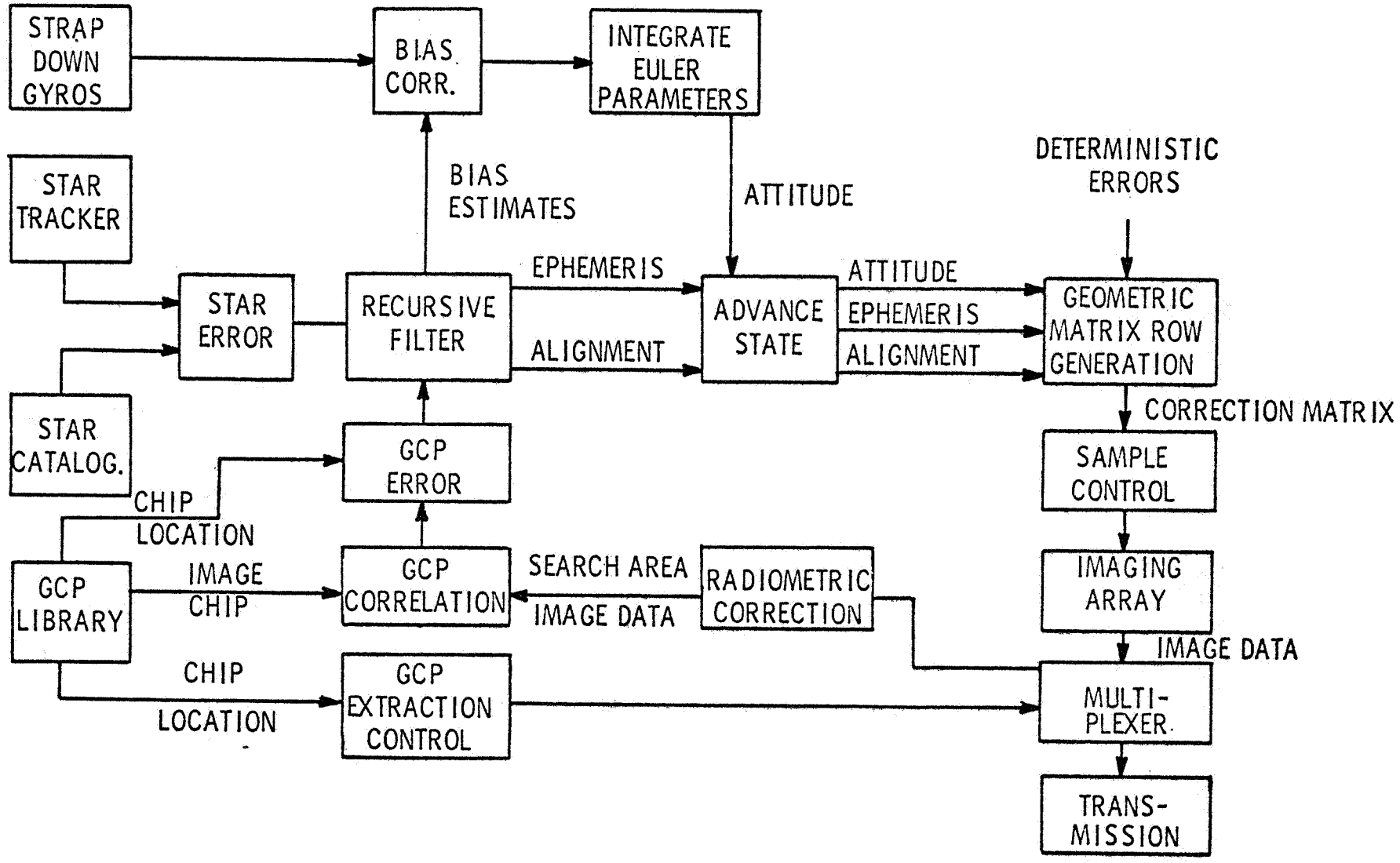
STRAP DOWN GYROS
BIAS CORR.
INTEGRATE EULER PARAMETERS
STAR TRACKER
BIAS ESTIMATES
ATTITUDE
DETERMINISTIC ERRORS
EPHEMERIS
ATTITUDE
STAR ERROR
RECURSIVE FILTER
ADVANCE STATE
EPHEMERIS
GEOMETRIC MATRIX ROW GENERATION
ALIGNMENT
ALIGNMENT
CORRECTION MATRIX
STAR CATALOG.
GCP ERROR
SAMPLE CONTROL
CHIP LOCATION
GCP LIBRARY
IMAGE CHIP
GCP CORRELATION
SEARCH AREA
IMAGE DATA
RADIOMETRIC CORRECTION
IMAGING ARRAY
IMAGE DATA
CHIP LOCATION
GCP EXTRACTION CONTROL
MULTI-PLEXER
TRANS-MISSION

Figure 10

- MISSION REQUIREMENTS
  - 708 KM ORBIT
  - 185 KM SWATH
  - 30 X 30 M PIXEL
  - MMS ATTITUDE CONTROL: 0.16 DEGREES YAW

- ERROR ALLOCATION (FIRST CUT)
  - PIXEL LOCATION PRECISION: 1.0 METER
  - CORRECTION MATRIX ERROR: 1.0 METER
  - KALMAN FILTER UNCERTAINTY: 4.06 METERS

- SENSOR CONFIGURATION
  - ~6000 X 20 PIXEL ARRAY
  - 8 X 8 DETECTORS PER PIXEL
  - 30 GRID POINT GEOMETRIC CORRECTION MATRIX WITH 3 SECONDS UPDATE
  - 32 X 32 PIXEL GCP CHIP WITH 38 PIXEL RADIUS OF UNCERTAINTY SEARCH AREA

ARRAY SIZE MAY BE A PROBLEM AT FOCAL PLANE

Figure 11

- REQUIRED NUMBER OF DETECTOR CELLS TO OBTAIN A DESIRED ACCURACY USING NEAREST NEIGHBOR APPROACH
  - 30 METER PIXEL
- GEOMETRIC CORRECTION MATRIX ERROR CONTRIBUTION TO CROSS TRACK ERROR
  - MODULAR ATTITUDE CONTROL
- SIGNAL TO NOISE RATIO FOR CID READOUT APPROACHES
  - RADIANCE 0.28 mw/CM^2
  - INTEGRATION TIME 4.5 ms
- DEPTH OF DETECTOR ARRAY FOR YAW ATTITUDE ERRORS
  - 185K METER IMAGE SWATH
  - 30 METER PIXEL

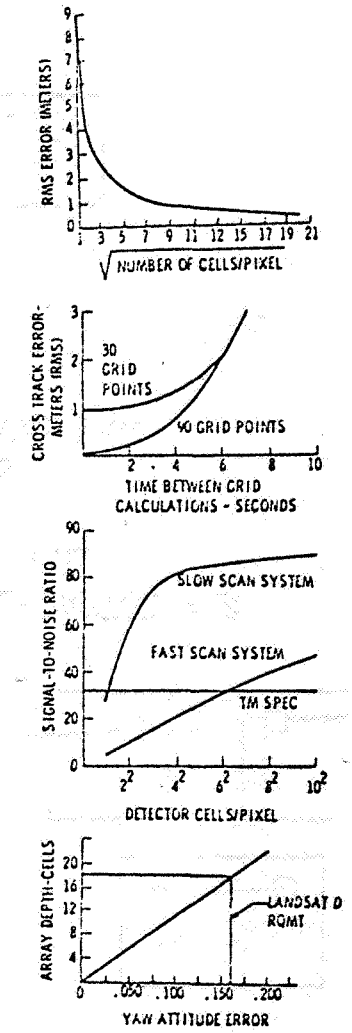

Figure 12

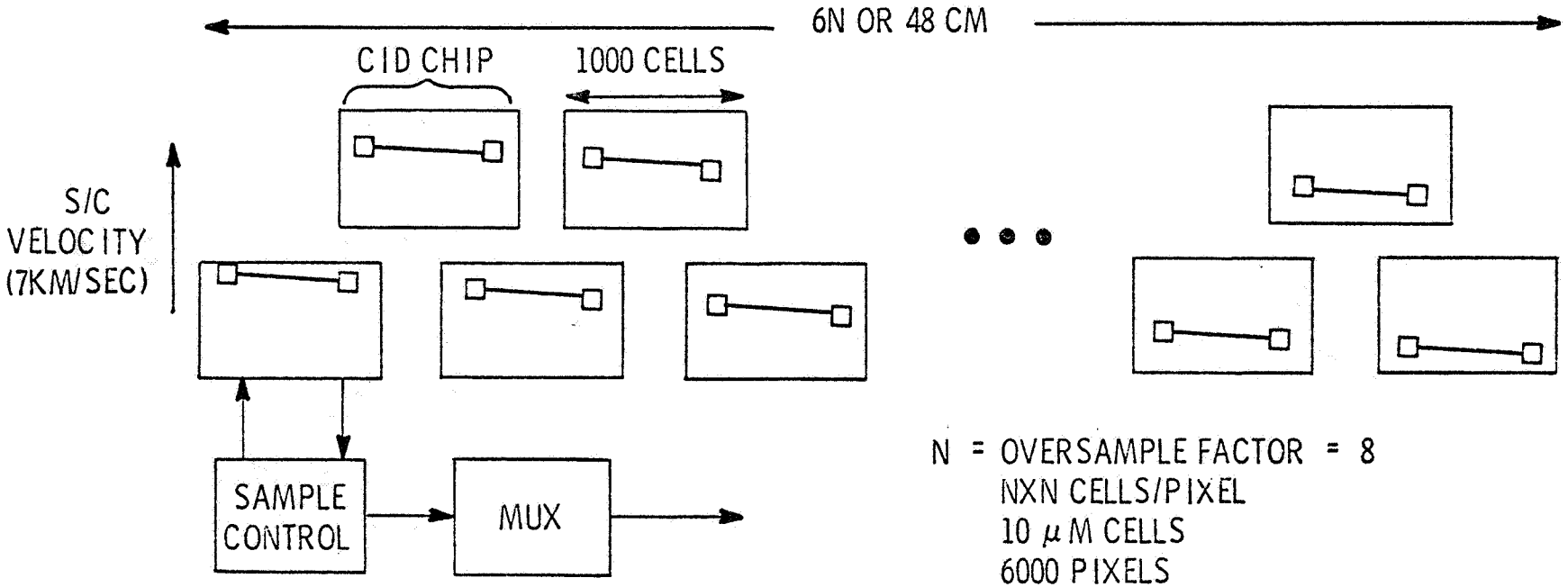

SPECIFY: FIRST PIXEL (X, Y)
SPACING (ΔX, ΔY)
FIXED NUMBER OF PIXELS/CHIP

N = OVERSAMPLE FACTOR = 8
NXN CELLS/PIXEL
10 μM CELLS
6000 PIXELS
20 PIXELS MAX YAW

REDUCTION OF THE OVER SAMPLING FACTOR TO 4 MAKES THE REQUIRED IMAGE PLANE COMPATIBLE WITH MLA DESIGN

Figure 13

- REDUCE NUMBER OF ELEMENTS PER PIXEL
  - RE-ALLOCATE ERROR BUDGET (EX: KALMAN→3.67 M)
  - INCREASE ERROR BUDGET

- REDUCE NUMBER OF PIXELS
  - REDUCE SWATH WIDTH
  - REDUCE RESOLUTION

Figure 14

ANALYSES TO BE COMPLETED IN TASK 2

- ACHIEVABLE ACCURACY OF ERROR MODELING
- LOCATION AND FREQUENCY OF GROUND CONTROL POINT (GCP) UPDATES
- REQUIRED SIZE OF ON-BOARD GCP LIBRARY
- EFFECTS OF IMPROVING ATTITUDE CONTROL POINT ACCURACY AND JITTER
- OBSERVABILITY OF ATTITUDE, ALIGNMENT, AND EPHEMERIS
- EFFECTS OF IMPROVED EPHEMERIS ESTIMATES DERIVED FROM GLOBAL POSITIONING SATELLITE SYSTEM
- ON-BOARD COMPUTATIONAL REQUIREMENTS

Figure 15

SUMMARY AND CONCLUSIONS

- "SMART SENSOR" CONCEPT IS FEASIBLE AND OFFERS BENEFITS
- MAJOR CHALLENGE TO MEET LANDSAT-D REQUIREMENTS IS FOCAL PLANE SIZE
- 2-DIMENSIONAL PUSH-BROOM APPROACH IS PREFERRED
- CID YIELD SIMPLEST IMPLEMENTATION
- SEVERAL KEY ANSWERS NEEDED TO DETERMINE EFFECTIVENESS

Figure 16