General Disclaimer

One or more of the Following Statements may affect this Document

- This document has been reproduced from the best copy furnished by the organizational source. It is being released in the interest of making available as much information as possible.

- This document may contain data, which exceeds the sheet parameters. It was furnished in this condition by the organizational source and is the best copy available.

- This document may contain tone-on-tone or color graphs, charts and/or pictures, which have been reproduced in black and white.

- This document is paginated as submitted by the original source.

- Portions of this document are not fully legible due to the historical nature of some of the material. However, it is the best reproduction available from the original submission.

Produced by the NASA Center for Aerospace Information (CASI)

NASA Technical Memorandum 79197

ENERGY-STATE FORMULATION OF LUMPED VOLUME DYNAMIC EQUATIONS WITH APPLICATION TO A SIMPLIFIED FREE PISTON STIRLING ENGINE

(NASA-TM-79197) ENERGY-STATE FORMULATION OF LUMPED VOLUME DYNAMIC EQUATIONS WITH APPLICATION TO A SIMPLIFIED FREE PISTON STIRLING ENGINE (NASA) 30 p HC A03/MF A01 CSCL 10B G3/44 N79-27663 Unclas 29276

Carl J. Daniele and Carl F. Lorenzo
Lewis Research Center
Cleveland, Ohio 44135

Prepared for the
Society for Computer Simulation
Pittsburgh, Pennsylvania, May 21-22, 1979

ENERGY-STATE FORMULATION OF LUMPED VOLUME DYNAMIC EQUATIONS WITH APPLICATION TO A SIMPLIFIED FREE PISTON STIRLING ENGINE

by Carl J. Daniele and Carl F. Lorenzo

National Aeronautics and Space Administration
Lewis Research Center
Cleveland, Ohio 44135

E-075

SUMMARY

Lumped volume dynamic equations are derived using an energy-state formulation. This technique requires that kinetic and potential energy state functions be written for the physical system being investigated. To account for losses in the system, a Rayleigh dissipation function is also formed. Using these functions, a Lagrangian is formed and using Lagrange's equation, the equations of motion for the system are derived. The results of the application of this technique to a lumped volume are used to derive a model for the free-piston Stirling engine. The model was simplified and programmed on an analog computer. Results are given comparing the model response with experimental data.

INTRODUCTION

A general problem presented to many engineers is: given a physical system, model it, simulate it, compare results with the physical system, and predict performance. The specific problem of modeling the system usually leads to either a lumped volume or a distributed parameter model. Once the particular model type is selected, the equations of motion that describe the system must be generated conducive to the model type.

Engineering systems are generally quite large. They are usually made up of more than one type of system. For example, the Stirling Engine consists of thermodynamic, fluid, and mechanical processes. Thus, the engineer must not only generate the equations of motion for the different types of systems but also the coupling equations between the systems. There are many methods used to derive the equations of motion. For a lumped volume model, partial differential equations describing the flow process can be taken from reference 1, and using approximations, simplified volume dynamic equations can be generated. This was done for a compressor in reference 2. For mechanical sys-

tems, free-body diagrams can be used. In these cases all forces are summed on the free bodies and the resulting equations of motion can be generated. In these cases however, any combination of the different types of systems requires a separate generation of the coupling equations. A more unified approach is to use an energy-state formulation of the system. This formulation (ref. 3) requires kinetic energy, potential energy, and loss functions to be written for the whole system. These functions are comprised of terms from all the various types of processes contained in the physical system. Once these functions are formed, a Lagrangian and a Rayleigh dissipation function are formed. The equations of motion for the system are then derived from these functions by Lagrange's equation. From this method, the coupling between the various systems falls out directly as opposed to deriving it separately.

This paper applies the energy-state formulation to the lumped volume technique. Using the results, the equations of motion for the free-piston Stirling engine are derived. The resultant model was then simplified to match an experimental test setup run at Lewis Research Center. The model was programmed on an analog computer. A comparison between the model and the experimental data is given.

STIRLING CYCLE

Before describing the energy-state approach to the free-piston volume dynamics, a brief discussion of the Stirling cycle will be given. A complete treatment can be found in reference 4. Idealized P-V and T-S diagrams are given in figure 1. The cycle consists of two isothermal and two constant volume processes. Practical implementation of the cycle uses two pistons separated by a regenerator (fig. 2). A regenerator is a porous material which alternately stores or rejects heat to a working fluid. The piston phasing is set by the cycle dynamics and the relative masses of the pistons. The volume between piston 1 and the regenerator is the expansion volume. This volume is kept hot through heat addition (T_{max} on fig. 1). The other space is called the compression space and it is kept cold by heat extraction. The combination of heat addition and extraction maintain a temperature gradient across the machine.

From figure 1, the cycle is generated by:

(1) With piston 2 at full stroke and piston 1 at minimum stroke, all the working fluid is in the compression space. The volume is at its maximum value while pressure and temperature are at minimum values.

(2) Piston 2 is then moved in while piston 1 remains fixed. Volume decreases and pressure rises since the working fluid is compressed. Temperature remains at T_{min} (process 1 - 2).

(3) For the process (2 - 3) both pistons are moved to the left in such a manner that the volume remains constant. The regenerator gives off heat to the cold working fluid, thus the temperature and pressure rise.

(4) When piston 2 reaches minimum stroke, it stops but piston 1 continues to move. Since volume increases, pressure decreases because of expansion. The temperature remains constant since heat is added (process 3 - 4).

(5) Finally, both pistons move together (constant volume) back to the original positions. The hot working fluid gives off heat to the regenerator, and pressure and temperature decrease.

The cycle shown in figure 1 is ideal. Generally the cycles are more rounded. The cycle thus accepts heat, converts some of the heat to work, then rejects the residual heat.

FREE-PISTON STIRLING ENGINE

A free piston engine is one in which the gas dynamics rather than mechanical linkage determines the relative phase between the two pistons - one of which is called the displacer piston and the other, the power piston. Much of the free piston Stirling engine development is attributed to Beale (ref. 5). Figure 3 shows a schematic of a dual free piston engine. The dual aspect of the engine is to provide force balancing for the large power pistons. A good explanation of the working of free piston Stirling engines is given in reference 4. Briefly, the bounce spaces function as gas springs for the displacer and power pistons. As the expansion space gas is heated, pressure increases and the pistons move out until their respective bounce space pressure forces get larger than the combined driving pressures and the piston inertia forces. The method of having one piston move while the other remains stationary is accomplished by having the power piston more massive than the displacer piston. Thus, the displacer moves much faster and moves the working fluid back and forth through the regenerator from the expansion space to the compression space. The resultant pressure changes in the working space caused by cyclic heat addition and rejection together with the tuned response of the pressures in the bounce spaces keep the system running.

MODEL

The energy-state formulation is applied to a lumped volume model of the free piston Stirling engine. The formulation requires that kinetic, potential, and loss energies be derived for the entire system. The resultant energy state terms are used to form a Lagrangian and a Rayleigh dissipation function. Once these functions are formed, Lagrange's Equation is used to derive the equations of motion for the system. These energy terms must be in generalized coordinates

and the forces acting on the system must be generalized. The generalized coordinates are those which are mutually independent. The number of generalized coordinates is equal to the number of degrees of freedom for the system. Typical systems and their respective generalized coordinates are given in reference 6. For a free-piston Stirling engine, there are thermodynamic, fluid, and mechanical processes involved. Their respective coordinates are entropy, volume, and displacement.

Thermodynamic processes require the use of very complex energy-state functions. Reference 6 gives a presentation of such functions and shows that the perfect gas law is an incomplete description of the state of a gas. Rather than use the complex energy-state functions some simplifying assumptions are made:

(1) Since for this application, the fluid velocities and hence the Mach numbers are low, the compliance of the fluid will be considered as a simple spring, that is, pressure is proportional to volume. This assumption is justified in reference 7 for small pressure differentials.

(2) Differential temperature changes are calculated from a separately imposed energy equation.

While these assumptions seem constraining, it will be shown that the technique leads to an equation set equivalent to the equations commonly used to model volume dynamics.

State Functions

In order to simulate the fluid dynamics, the fluid system is considered as a collection of discrete lumps (lumping). Once the lumping is done, energy, co-energy state functions and a loss function can be derived in order to use the energy-state formulation. These functions result in inductive, capacitive, and resistive terms in the equations of motion (ref. 6). These terms will be derived for a fluid dynamic process in the following sections.

Figure 4 shows a string of control volumes representing the discretized fluid system. Between the lumps a spring is used to represent a capacitive or energy storage term and wall friction is used to represent a loss term. Each flow volume has an associated mass of fluid and a displacement volume flow rate represented by V and Q respectively.

Kinetic Energy

The kinetic energy for the system results from the fluid inductance. From reference 6, the pressure momentum is defined as:

$$P_p = IQ \tag{1}$$

All symbols are given in Appendix A. I is the fluid inertia. Figure 5 shows the kinetic energy and coenergy fields. From the figure, the kinetic energy is:

$$T_f(P_p) = \int_0^{P_p} Q'(P'_p)\, d\, P'_p \tag{2}$$

where the primes indicate a variable of integration. The kinetic coenergy is:

$$T_f^*(Q) = \int_0^{Q} P'_p(Q')\, dQ' \tag{3}$$

Using eq. (1) and assuming a linear inductance:

$$T_f^*(Q) = \frac{IQ^2}{2} \tag{4}$$

Eq. (4) gives the kinetic coenergy function needed. Next the inertia must be defined. Figure 6 shows a pipe with fluid flowing through it. The fluid is driven by the pressure difference. Thus:

$$\frac{\rho \ell}{g} \frac{d}{dt}\left(\frac{Q}{A}\right) = P_1 - P_2 \tag{5}$$

The use of Q/A as the velocity assumes that a well defined velocity profile is known at each cross section of the pipe. Also the fluid lumps are assumed to move as rigid bodies. Thus, the inertia is:

$$I = \frac{\rho \ell}{Ag} \tag{6}$$

Hence, the kinetic energy for a typical lump of fluid volume in the coordinates of this study is:

$$T_f^* = \frac{\rho \ell}{Ag} \frac{Q^2}{2} \tag{7}$$

Potential Energy

The potential energy is not easily described. From figure 4, if the lumps of fluid mass move at different rates, potential energy can be stored in the control volume in the form of an increase in pressure. For small density changes an average density is sufficient, and a linear capacitor can be used to model the compressibility effects. From reference 6, for fluid dynamics:

$$P = \frac{1}{K} V \tag{8}$$

where K is the (spring) compliance (reciprocal of the spring constant), V the volume, and P the pressure. Since the equations derived in this analysis will be used for a gas, it is of interest to derive the compliance for a gas under general conditions and compare the result with eq. (8).

For a general thermodynamic polytropic process:

$$PV^n = \text{Constant} \tag{9}$$

Differentiating:

$$V^n dP + nPV^{n-1} dV = 0$$

$$dP = -\frac{nP}{V} dV \tag{10}$$

This relation is shown in figure 7. Comparing eqs. (8) and (10) gives:

$$K = -\left(\frac{V}{nP}\right) \tag{11}$$

Next, for an average pressure and volume, a straight line approximation is drawn. Thus:

$$\overline{K} = -\frac{\overline{V}}{n\overline{P}}$$

Figure 7 can be inverted and translated as is done in figure 8 to show the potential energy and coenergy fields. For an isothermal process, n equals 1 and:

$$\overline{K} = -\frac{\overline{V}}{\overline{P}} \tag{12}$$

If the process is isentropic, then $n = \gamma$, the ratio of specific heats and:

$$K = -\frac{\overline{V}}{\gamma \overline{P}}$$

If displacement coordinates this is equivalent to the reciprocal of the spring constant normally seen for gas volumes for free piston engines, for example:

$$K' = -\frac{\gamma A^2 P}{V}$$

This constant is given in reference 4 where K' is the spring constant. Since:

$$\Delta Q = \overline{K} \Delta P$$

and

$$\Delta V = \overline{K} \Delta P \tag{13}$$

The potential energy using figure 8 is

$$v_f(\Delta V) = \int_0^{-\Delta V} \Delta P'(\Delta V')\, d\Delta V' = \frac{1}{\overline{K}} \left(\frac{\Delta V^2}{2}\right)$$

or

$$v_f = \frac{1}{\overline{K}} \frac{\Delta V^2}{2} \tag{14}$$

Finally, n is taken as 1 when formulating the potential energy terms for the flow process.

Resistance

A Rayleigh dissipation function can be written for the flow losses in the system. In figure 4, the losses are indicated as wall frictions. This behavior can be expressed as:

$$\Delta P = RQ \tag{15}$$

where R is the fluid resistance. The defining fields for the Rayleigh and co-Rayleigh dissipation functions are shown in figure 9. For the Rayleigh function:

$$F_f = \int_0^Q \Delta P'(Q')dQ' \tag{16}$$

Using eq. (15):

$$F_f = \frac{RQ^2}{2} \tag{17}$$

ANALYSIS OF STIRLING FREE PISTON SYSTEM

The system analyzed in this paper contains fluid, mechanical, and thermal elements. The previous sections have determined the various energy forms for the fluid system. Here these results will be combined with the mechanical counterparts and later with the energy equation (thermodynamic elements) to yield the complete system equations.

Combined Mechanical and Fluid Systems

Now, the energy formulation is applied to a combined mechanical and fluid dynamic system. Figure 10 shows two pistons exerting forces on a contained fluid. for a linear mechanical system, the kinetic and potential energies and the loss function are well known and are:

$$\left.\begin{aligned} T_m^* &= \sum_{i=1}^{m} \frac{M_i \dot{x}_i^2}{2} \\ V_m &= \sum_{i=1}^{\ell} \frac{x_i^2}{2\,K_{m_i}} \\ F_m &= \sum_{i=1}^{m} \frac{D_i \dot{x}_i^2}{2} \end{aligned}\right\} \tag{18}$$

Since the displacement coordinate for the fluid system is volume, here let:

$$\left.\begin{aligned} \xi_i &= A_{p_i} x_i \\ \dot{\xi}_i &= A_{p_i} \dot{x}_i \end{aligned}\right\} \tag{19}$$

Substituting into eq. (18) yields

$$\left.\begin{aligned} T^*_m &= \sum_{i=1}^{m} \frac{M_i \dot{\xi}_i^2}{2 A_{p_i}^2} \\ v_m &= \sum_{i=1}^{\ell} \frac{\xi_i^2}{2 A_{p_i}^2 K_{m_i}} \\ F_m &= \sum_{i=1}^{m} \frac{D_i \dot{\xi}_i^2}{2 A_{p_i}^2} \end{aligned}\right\} \tag{20}$$

Now for the complete system on figure 10, the total kinetic, potential and dissipative energies for the fluid and piston are given by using eqs. (7), (14), (17) and (20) with $v_m = 0$

$$\left.\begin{aligned}
T^* &= \sum_{i=1}^{n} \left[\frac{I_i Q_i^2}{2}\right] + \frac{M_1 \dot{\xi}_1^2}{2 A_{p_1}^2} + \frac{M_2 \dot{\xi}_2^2}{2 A_{p_2}^2} \\
v &= \sum_{i=1}^{n} \left[\frac{(V_i - V_{i+1})^2}{2 \overline{K}_{i \to i+1}}\right] + \frac{(\xi_1 - V_1)^2}{2 \overline{K}_{i \to 1}} + \frac{(V_n - \xi_2)^2}{2 \overline{K}_{n \to 2}} \\
F &= \sum_{i=1}^{n} \left[\frac{R_i Q_i^2}{2}\right] + \frac{D_1 \dot{\xi}_1^2}{2 A_{p_1}^2} + \frac{D_2 \dot{\xi}_2^2}{2 A_{p_2}^2}
\end{aligned}\right\} \tag{21}$$

Note that in the potential energy function that the spring compliance $\overline{K}$ has the square of the area in it.

Lagrangian

The Lagrangian form (ref. 3) for the energy forms used are given by

$$\mathcal{L}(Q_1 \ldots Q_n, \dot{\xi}_1, \dot{\xi}_2, V_1 \ldots V_n, \xi_1, \xi_2) = T^*(Q_1 \ldots Q_n, \dot{\xi}_1, \dot{\xi}_2) - v(V_1 \ldots V_n, \xi_1, \xi_2)$$

The Lagrangian is

$$\mathcal{L} = \sum_{i=1}^{n} \left[\left(\frac{I_i Q_i^2}{2}\right)\right] + \frac{M_1 \dot{\xi}_1^2}{2 A_{p_1}^2} + \frac{M_2 \dot{\xi}_2^2}{2 A_{p_2}^2}$$

$$- \left\{ \sum_{i=1}^{n} \left[\frac{(V_i - V_{i+1})^2}{2 \overline{K}_{i \to i+1}}\right] + \frac{(\xi_1 - V_1)^2}{2 \overline{K}_{1 \to 1}} + \frac{(V_n - \xi_2)^2}{2 \overline{K}_{n \to 2}} \right\} \tag{22}$$

Lagrange's equation is

$$\frac{d}{dt}\left[\frac{\partial \mathcal{L}}{\partial \dot{\alpha}_i}(\dot{\alpha}_i, \alpha_i)\right] - \frac{\partial \mathcal{L}}{\partial \alpha_i}(\dot{\alpha}_i, \alpha_i) + \frac{\partial F}{\partial \dot{\alpha}_i}(\dot{\alpha}_i) = \mathcal{F}_i \tag{23}$$

$$i = 1, 2 \ldots n + 2$$

specifically

$$\alpha = V_1, V_2 \ldots V_n, \xi_1, \xi_2$$

$$\dot{\alpha} = Q_1, Q_2 \ldots Q_n, \dot{\xi}_1, \dot{\xi}_2$$

The system of equations represented by eq. (23) are the equations of motion for the system and are the mathematical description of the fluid and mechanical behavior. The various partials in eq. (23) are now determined. The inductance terms determined by $\partial \mathcal{L}/\partial \dot{\alpha}_i$ are

$$\left.\begin{aligned}
\frac{\partial \mathcal{L}}{\partial \dot{\xi}_1} &= \frac{M_1 \dot{\xi}_1}{A_{p_1}^2} \\
\frac{\partial \mathcal{L}}{\partial \dot{\xi}_2} &= \frac{M_2 \dot{\xi}_2}{A_{p_2}^2} \\
\frac{\partial \mathcal{L}}{\partial Q_1} &= I_1 Q_1 \\
&\vdots \\
\frac{\partial \mathcal{L}}{\partial Q_n} &= I_n Q_n
\end{aligned}\right\} \tag{24}$$

Similarly, the capacitive terms, $\frac{\partial \mathcal{L}}{\partial \alpha_i}$ are given by

$$\left.\begin{aligned}
\frac{\partial \mathcal{L}}{\partial \xi_1} &= -\frac{(\xi_1 - V_1)}{\bar{K}_{1\to 1}} \\
\frac{\partial \mathcal{L}}{\partial \xi_2} &= \frac{(V_n - \xi_2)}{\bar{K}_{n\to 2}} \\
\frac{\partial \mathcal{L}}{\partial V_1} &= -\left[\frac{(V_1 - V_2)}{\bar{K}_{1\to 2}} + \frac{(V_1 - \xi_1)}{\bar{K}_{1\to 1}}\right] \\
&\vdots \\
\frac{\partial \mathcal{L}}{\partial V_n} &= -\left[\frac{(V_n - \xi_2)}{\bar{K}_{n\to 2}} + \frac{(V_n - V_{n-1})}{\bar{K}_{n-1\to n}}\right]
\end{aligned}\right\} \tag{25}$$

For the resistive term

$$\left.\begin{aligned}
\frac{\partial F}{\partial \dot{\xi}_1} &= \frac{D_1 \dot{\xi}_1}{A_{p_1}^2} \\
\frac{\partial F}{\partial \dot{\xi}_2} &= \frac{D_2 \dot{\xi}_2}{A_{p_2}^2} \\
\frac{\partial F}{\partial Q_1} &= R_1 Q_1 \\
&\vdots \\
\frac{\partial F}{\partial Q_n} &= R_n Q_n
\end{aligned}\right\} \tag{26}$$

Next, using Lagrange's equation (eq. (23)), for the ξ_1 coordinate

$$\frac{M_1}{A_{p_1}^2}\,\xi_1 + \frac{(\xi_1 - V_1)}{\bar{K}_{1\to 1}} + \frac{D_1 \dot{\xi}_1}{A_{p_1}^2} = 0 \tag{27}$$

Finally, substitute in eq. (19) and multiply through by the piston area

$$M_1\ddot{x}_1 + \frac{\left(A_{p_1}x_1 - V_1\right)A_{p_1}}{\bar{K}_{1\to 1}} + D_1\dot{x}_1 = 0$$

Since $\frac{\Delta V}{\bar{K}}$ is pressure, we can write

$$M_1\ddot{x}_1 + D_1\dot{x}_1 = -P_1A_{p_1} \tag{28}$$

Eq. (28) is the equation of motion for the piston. Note that the force $P_1A_{p_1}$ opposes the piston motion and is the coupling force between the mechanical and fluid systems. This coupling comes naturally from the energy-state formulation. While this example is somewhat simple, it still illustrates the value of the method when more than one type of system is contained in a physical process.

Finally, if a force is exerted on left piston, the equation of motion would be the same except for the generalized force. If a force f is exerted on the piston in the x direction, then all the generalized force components are

$$\left.\begin{aligned} q_{x_1} &= f \\ q_{x_2} &= 0 \\ q_{V_1} &= 0 \\ &\vdots \\ q_{V_n} &= 0 \end{aligned}\right\} \tag{29}$$

The generalized forces for the equations of motion are

$$\mathcal{F}_i = q_{x_1}\frac{\partial x_1}{\partial \alpha_i} + q_{x_2}\frac{\partial x_2}{\partial \alpha_i} + q_{V_i}\frac{\partial V_1}{\partial \alpha_i} + \ldots\ q_{V_n}\frac{\partial V_n}{\partial \alpha_i} \tag{30}$$

However, since all generalized coordinates are independent, the generalized forces are the actual forces in their coordinate system

$$\begin{aligned} \mathcal{F}_1 &= f/A_{p_1} \\ \mathcal{F}_2 = \mathcal{F}_{V_1} &= \ldots\ \mathcal{F}_{V_n} = 0 \end{aligned} \tag{31}$$

Thus, the equation of motion for the piston with force f in the x direction is

(32)

$$M_1\ddot{x}_1 + D_1\dot{x}_1 = f - P_1A_{p_1} \tag{32}$$

The equation of motion for the ξ_2 coordinate is

$$M_2\ddot{x}_2 + D_2\dot{x}_2 = P_nA_{p_2} \tag{33}$$

For the flow coordinate V_1

$$I_1\dot{Q}_1 + \frac{(V_1 - V_2)}{\overline{K}_{1\to 2}} - \frac{(\xi_1 - V_1)}{\overline{K}_{1\to 1}} + R_1Q_1 = 0 \tag{34}$$

Using the average density approximation, eq. (34) becomes

$$\frac{\ell_1}{A_1g}\ddot{w}_1 + R_1'\dot{w}_1 = P_1 - P_2 \tag{35}$$

Thus, the flow equations derived from the Lagrangian formulation are fully equivalent to those which would be derived from differential methods.

FREE PISTON EQUATIONS

A schematic of the free piston engine is shown in figure 11. Only half of the engine was modeled due to component constraints on the analog computer. From this figure, there are seven volumes and two pistons. Thus there are eight equations of motion. Using the results of eqs. (32) and (35), the equations of motion are

$$\frac{\ell_1}{A_1g}\ddot{w}_1 + R_1'\dot{w}_1 = P_e - P_H \tag{36}$$

$$\frac{\ell_2}{A_2g}\ddot{w}_2 + R_2'\dot{w}_2 = P_H - P_{R_1} \tag{37}$$

$$\frac{\ell_3}{A_3g}\ddot{w}_3 + R_3'\dot{w}_3 = P_{R_1} - P_{R_2} \tag{38}$$

$$\frac{\ell_4}{A_4g}\ddot{w}_4 + R_4\dot{w}_4 = P_{R_2} - P_1 \tag{39}$$

$$\frac{\ell_5}{A_5 g}\ddot{w}_5 + R_5'\dot{w}_5 = P_I - P_{COLD} \tag{40}$$

$$\frac{\ell_6}{A_6 g}\ddot{w}_6 + R_6'\dot{w}_6 = P_{COLD} - P_C \tag{41}$$

$$M_d\ddot{x}_d + D_d\dot{x}_d = P_{DB}A_{dr} - P_e A_d + P_c(A_d - A_{dr}) \tag{42}$$

$$M_p\ddot{x}_p + D_p\dot{x}_p = P_{PB_2}(A_{p_2} - A_{pr}) - P_{PB_1}(A_{p_2} - A_{p_1}) - P_c A_p \tag{43}$$

The energy equation is derived in Appendix B. The general form of the derived equation is

$$w_s\dot{\overline{T}} = \dot{w}_{in}(\gamma\overline{T}_{in} - \overline{T}) - \dot{w}_{out}(\gamma\overline{T}_{out} - \overline{T}) + \sum \frac{\dot{Q}_{in}}{c_V} - \frac{P}{Jc_V}\frac{dV}{dt} \tag{44}$$

where

$$\overline{T}_{in} = \begin{cases} \overline{T}_{upstream} & \text{for positive } \dot{w}_{in} \\ \overline{T} & \text{for negative } \dot{w}_{in} \end{cases}$$

$$\overline{T}_{out} = \begin{cases} \overline{T} & \text{for positive } \dot{w}_{out} \\ \overline{T}_{downstream} & \text{for negative } \dot{w}_{out} \end{cases}$$

The reason for the switching is the bidirectional flow characteristic of the machine. These seven temperature equations correspond to the seven volumes considered. The temperatures were coupled to the flow equations through the ideal gas law.

Finally, both regenerator segments were modeled as thermal lags. For example for the first regenerator

$$\overline{T}_{w_1} = -\int \frac{h_R A_R}{c_{V_m} w_{s_m}}\left(\overline{T}_{R_1} - \overline{T}_{w_1}\right) dt \tag{45}$$

where c_{V_m} and w_{s_m} are dependent on the regenerator material.

SIMPLIFIED FREE PISTON ENGINE MODEL

The free piston engine shown in figure 3 was run at Lewis Research Center. For part of the test, the power pistons were locked in their forward most positions, and the displacers were stroked up and down by oscillating the pressures in their bounce spaces. This was done to study the thermodynamic flow process in the machine.

The simulation was set up to match this experiment. This was done by using only the temperature and flow equations. The displacer was externally driven, thus eqs. (42) and (43) were not programmed. Further, since the inductance terms were very small, they were set to zero in eqs. (36) to (41). This also had the desirable effect of reducing the number of analog components.

Figure 12 shows a comparison of the model results with the experimental data. Note that the comparison was quite good for the pressure profile. For the temperature profile, however, the amplitude swing of the wave shape is good but the transient comparison is not good. The reason for this is still not completely understood but is believed related to gas thermocouples intermittently touching the expansion space wall. The experimental stored mass compares well with the analytical. The experimental values were calculated by using the pressure and temperature profiles shown, calculating the volume of the expansion space as a function of the displacer position, and then applying the perfect gas law. The mean value of the stored mass is somewhat higher for the simulation, but that is due to the slightly higher mean pressure for the simulation and the discrepancy between the analog and experimental temperature profiles. That pressure and mass compare while temperature does not is possible because of the large DC values of temperature (not shown).

REMARKS AND CONCLUSIONS

The energy-state formulation was used to derive the equations of motion for a fluid-mechanical-thermal system. By appropriate assumptions, the procedure was shown to lead to commonly used equations for volume dynamics. The procedure also afforded a unified approach in deriving the equations of motion where more than one type of process is contained in the physical system.

The equations of motion for the free piston Stirling engine were derived using the energy-state approach. These equations were simplified and programmed on an analog computer. Results from the experimental data and simulation agree reasonably well.

The structures which were used in this formulation were chosen to give results consistent with those which would be derived by standard differential techniques. It is to be hoped that with more experience with the approach that some

of the assumptions made in this paper might be relaxed and yet yield forms which can be readily simulated and extend the validity range of the model.

Finally, the energy equation was separately derived for this paper. It would be worthwhile to attempt a complete Lagrangian approach which would handle both the fluid mechanical aspects and the thermodynamic aspects as well.

APPENDIX A

SYMBOLS

A	area, m^2; (ft^2)
A_d	displacer area, m^2; (ft^2)
A_{dr}	displacer rod area, m^2; (ft^2)
A_p	power piston area, m^2; (ft^2)
A_{p_1}	power piston area, m^2; (ft^2)
A_{p_2}	power piston area, m^2; (ft^2)
A_{p_r}	power piston rod area, m^2; (ft^2)
c_p	specific heat at constant pressure, J/(kg-K); (Btu/(lbm-^oR))
c_V	specific heat at constant volume, J/(kg-K); (Btu/(lbm-^oR))
c_{V_m}	specific heat of the mesh, J/(kg-K); (Btu/(lbm-^oR))
D	piston friction
d	change in
F	Rayleigh Dissipation Function
F^*	Co-Rayleigh Dissipation Function
$\mathcal{F}$	Generalized force
f	force, N; (lbf)
g	gravity, 1.0 (kg-m)/N-sec^2); (32.2 (lbm-ft)/(lbf-sec^2))
h	enthalpy, J/kg; (Btu/lbm)
h_R	regenerator heat transfer coefficient, J/(sec-m^2-K); (Btu/(sec-ft^2-^oR))
I	fluid inertia, (N-sec^2)/(m^5); ((lbf-sec^2)/(ft^5))
J	mechanical equivalent of heat, 1.0 (N-m/J); (778.3 (ft-lbf)/Btu)
K	reciprocal of compliance, m^5/N; (ft^5/lbf)
K'	spring constant, N/m^5; (lbf/ft^5)
$\mathcal{L}$	Lagrangian
ℓ	length, m; (ft)
M	mass, kg; (lbm)
n	polytropic constant
P	pressure, N/m^2; (lbf/ft^2)

P_{DB}	displacer bounce space pressure, N/m^2; (lbf/ft^2)
P_p	pressure momentum, $(N\text{-}sec)/m^2$; $((lbf\text{-}sec)/ft^2)$
P_{PB_1}	power piston bounce space pressure, N/m^2; (lbf/ft^2)
P_{PB_2}	power piston bounce space pressure, N/m^2; (lbf/ft^2)
Q	volume flow rate, m^3/sec; (ft^3/sec)
$\mathcal{Q}$	heat, J; (Btu)
$\dot{\mathcal{Q}}$	heat flow rate, J/sec; (Btu/sec)
q	generalized force component
R	resistance, $(N\text{-}sec)/m^5$, $((lbf\text{-}sec)/ft^5)$
R'	transformed resistance, $(N\text{-}sec)/(kg\text{-}m^2)$; $((lbf\text{-}sec)/(lbm\text{-}ft^2))$
S	entropy, J/(kg-K); $(Btu/(lbm\text{-}^{o}R))$
T	Kinetic Energy Function, N-m; (lbf-ft)
T^*	Kinetic Co-Energy Function, N-m; (lbf-ft)
$\overline{T}$	temperature, K; (^{o}R)
t	time, sec
U	internal energy, J/kg; (Btu/lbm)
V	displacement volume, m^3, (ft^3)
v	Potential Energy Function, N-m; (lbf-ft)
W	work, J; (Btu)
w	mass, kg; (lbm)
w_s	stored mass, kg; (lbm)
w_{s_m}	regenerator mass, kg; (lbm)
$\dot{w}$	mass flow rate, kg/sec; (lbm/sec)
$\ddot{w}$	mass flow acceleration, kg/sec^2; (lbm/sec^2)
x	linear displacement, m; (ft)
α	generalized coordinates
ξ	linear displacement coordinate transformation
γ	ratio of specific heats
Δ	change in
ρ	density, kg/m^3; (lbm/ft^3)
$'$	variable of integration

d/dt	derivative with respect to time
$\partial/\partial x$	partial derivative with respect to x

Subscripts:

1 - 6	variable designation
c	compression volume
COLD	cooler volume
d	displacer
e	expansion volume
f	fluid
H	heater volume
I	intermediate volume
i	index
in	into a volume
m	mechanical
out	out of a volume
p	power piston
R	regenerator
R_1	first regenerator volume
R_2	second regenerator volume
w	mesh

APPENDIX B

ENERGY EQUATION

The change of stored energy for a control volume is considered. A typical volume is shown on figure 13. Now for low velocity gas flow, kinetic and potential energies can be neglected. Then the change in internal energy is given by:

$$d(w_s U) = dQ - dW + h_{in} w_{in} - h_{out} w_{out}$$

Now the following substitutions are made, for equilibrium process

$$U = c_V \overline{T}, \; h = c_p \overline{T}, \; dW = \frac{P}{J} \, dV$$

giving

$$\frac{d}{dt} (w_s c_V \overline{T}) = \dot{Q} - \frac{P}{J} \frac{dV}{dt} + \dot{w}_{in} c_p \overline{T}_{in} - \dot{w}_{out} c_p \overline{T}_{out}$$

And since $\dot{w}_s = \dot{w}_{in} - \dot{w}_{out}$ and $\gamma = \frac{c_p}{c_V}$

$$w_s \dot{\overline{T}} = \dot{w}_{in} (\gamma \overline{T}_{in} - \overline{T}) - \dot{w}_{out} (\gamma \overline{T}_{out} - \overline{T}) + \frac{\dot{Q}}{c_V} - \frac{P}{J c_V} \frac{dV}{dt}$$

It is to be noted that, since the Stirling engine flow directions oscillate (through zero) due to the nature of the cycle, switching logic on temperatures and flows is necessary to implement the energy equation correctly in each flow direction.

REFERENCES

1. R. B. Bird, W. E. Stewart, and E. N. Lightfoot, Transport Phenomena. New York: Wiley, 1960.

2. C. J. Daniele, R. J. Blaha, and K. Seldner, Prediction of Axial-Flow Instabilities in a Turbojet Engine by Use of a Multistage Compressor Simulation on the Digital Computer, National Aeronautics and Space Admin., Washington, D.C., NASA TM X-3134, 1975.

3. J. Meisel, Principles of Electromechanical Energy Conversion. New York: McGraw-Hill, 1966.

4. G. Walker, Stirling Engines. Volumes I and II. Alberta, Canada: University of Calgary Press, 1978.

5. W. Beale, W. Holmes, S. Lewis and E. Cheng, Free-Piston Stirling Engines - A Progress Report, Society of Automotive Engineers, Paper 730647, June 1973.

6. D. Karnopp, and R. Rosenburg, System Dynamics: A Unified Approach, New York: Wiley, 1975.

7. S. Seely, An Introduction to Engineering Systems, Elmsford, N. Y. Pergamon Press, 1972.

8. V. Faires, Thermodynamics, New York: Macmillan Co., 1962.

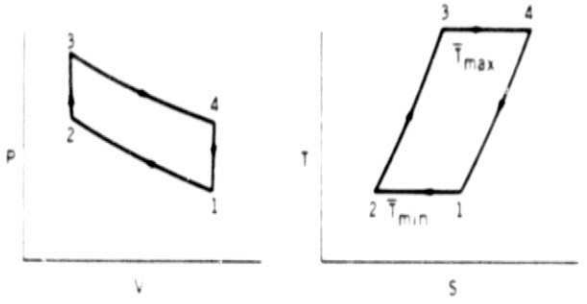

Figure 1. - Stirling engine cycle

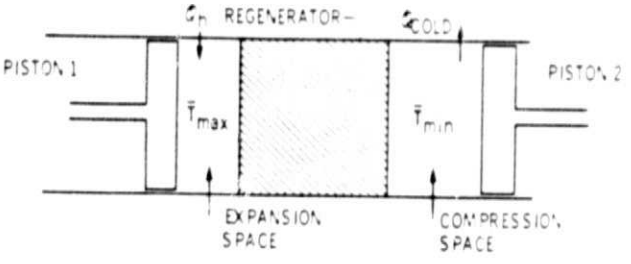

Figure 2. - Stirling engine.

ORIGINAL PAGE IS
OF POOR QUALITY

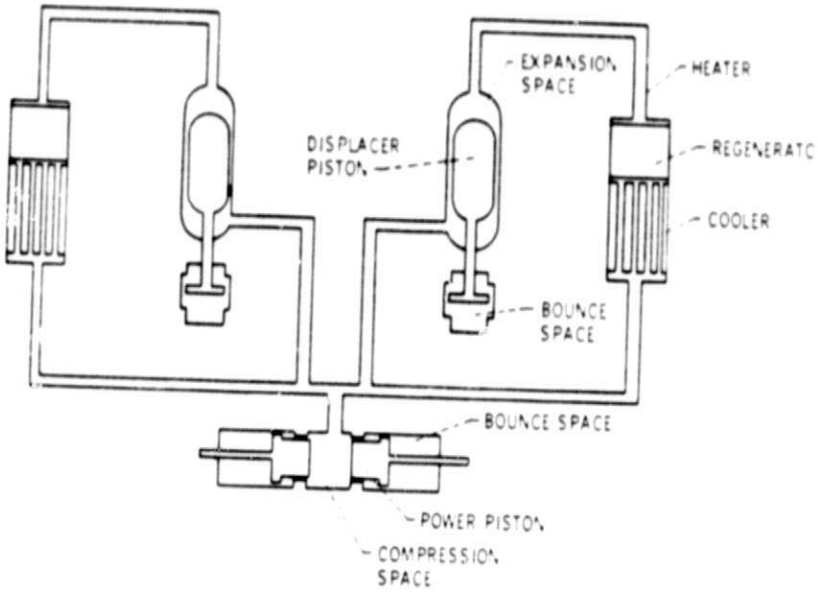

Figure 3. - Free-piston stirling engine.

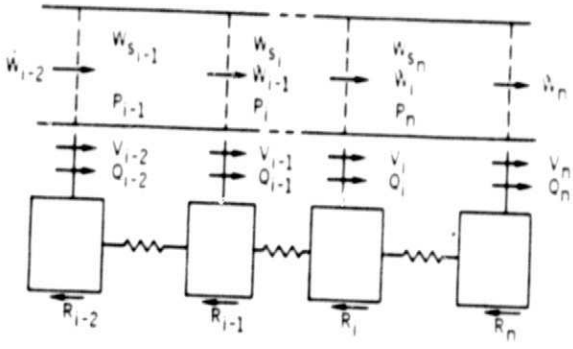

Figure 4. - Fluid system.

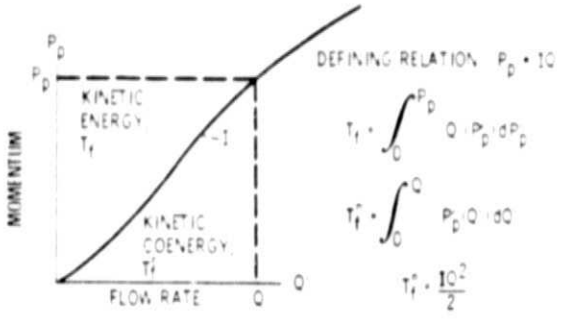

Figure 5. - Kinetic energy fields

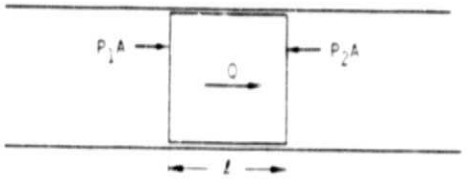

Figure 6. - Fluid inertia

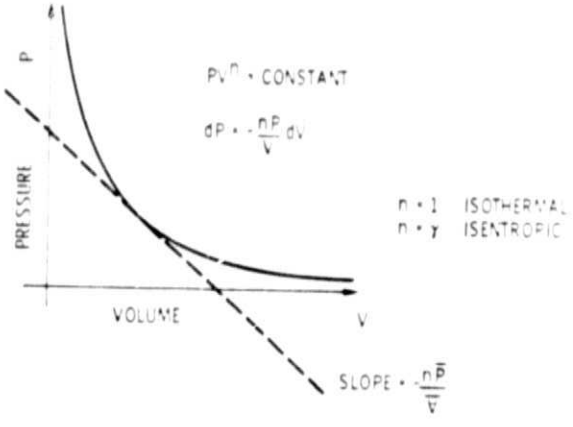

Figure 7. - Polytropic process.

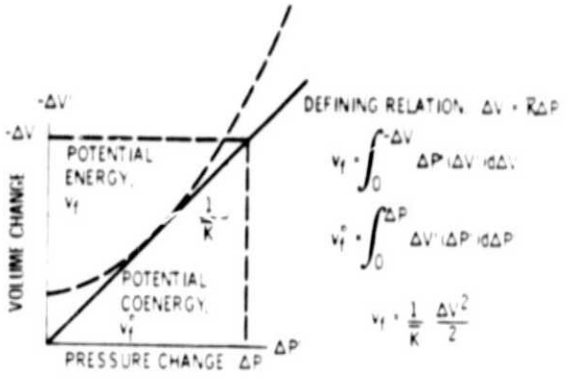

Figure 8. - Potential energy fields.

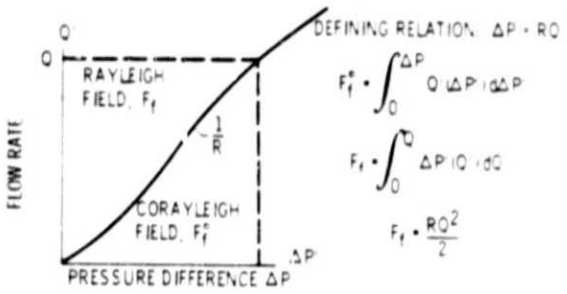

Figure 9. - Rayleigh loss fields.

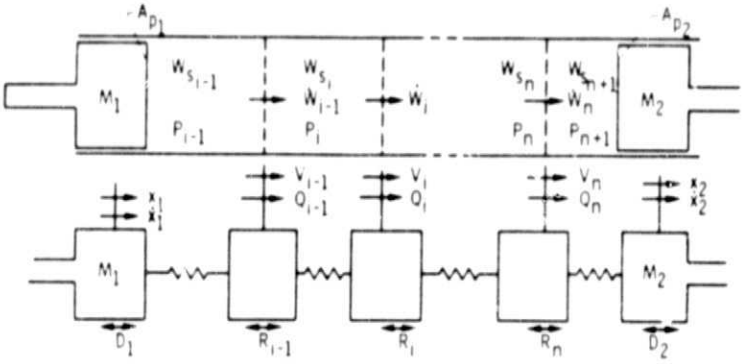

Figure 10. - Combined fluid and mechanical systems.

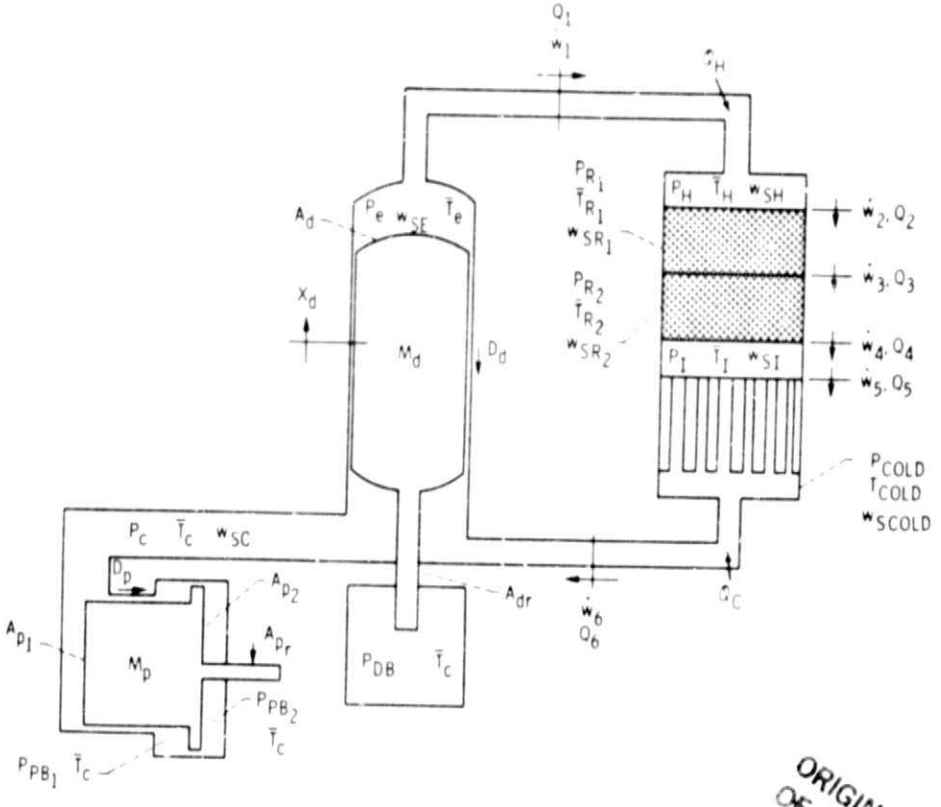

Figure 11. - Free piston schematic.

ORIGINAL PAGE IS
OF POOR QUALITY

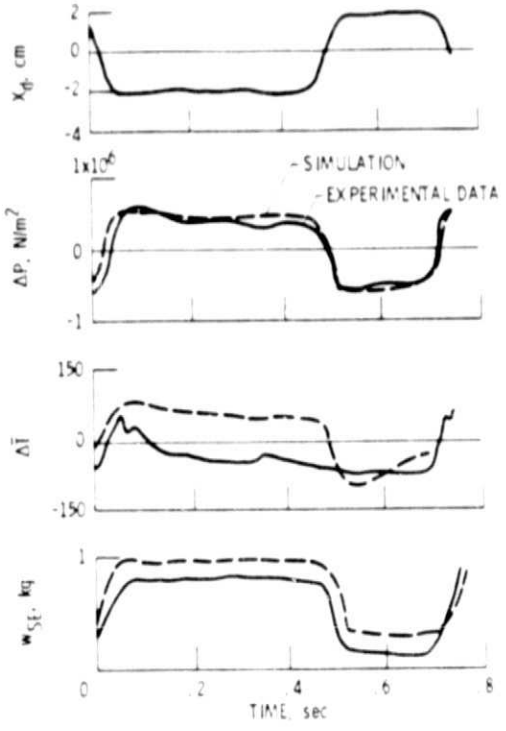

Figure 12. - Comparison.

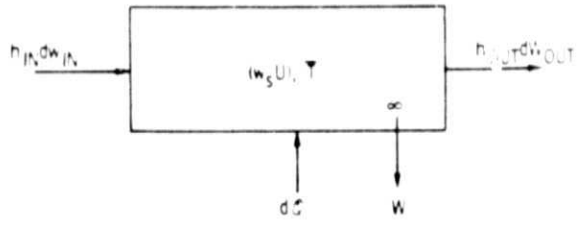

Figure 13. - Control volume.