NASA Contractor Report 2849

LOAN COPY: RETURN TO
AFWL TECHNICAL LIBRARY
KIRTLAND AFB, N. M.

TECH LIBRARY KAFB, NM
0061651

A Program To Compute Three-Dimensional Subsonic Unsteady Aerodynamic Characteristics Using the Doublet Lattice Method, L216 (DUBFLX)

Volume I: Engineering and Usage

M. Richard and B. A. Harrison

CONTRACT NAS1-13918
OCTOBER 1979

NASA

28 OCT 1979
Technical Library
AF Weapons
Laboratory

TECH LIBRARY KAFB, NM
0061651

NASA Contractor Report 2849

A Program To Compute Three-Dimensional Subsonic Unsteady Aerodynamic Characteristics Using the Doublet Lattice Method, L216 (DUBFLX)

Volume I: Engineering and Usage

M. Richard and B. A. Harrison
Boeing Commercial Airplane Company
Seattle, Washington

Prepared for
Langley Research Center
under Contract NAS1-13918

NASA
National Aeronautics
and Space Administration

Scientific and Technical
Information Branch

1979

CONTENTS

		Page
1.0	SUMMARY	1
2.0	INTRODUCTION	2
3.0	SYMBOLS AND NOMENCLATURE	3
4.0	ENGINEERING DESCRIPTION	6
4.1	Summary of Theoretical Development	6
4.1.1	Equations	6
4.1.2	Solution Method	7
4.2	Application	9
4.2.1	Modeling Idealizations	9
4.2.2	Limitations	12
5.0	PROGRAM STRUCTURE AND DESCRIPTION	13
5.1	Program L216	14
5.2	Program Initial	15
5.3	Program PRT2	15
5.4	Program GEWSSL	15
5.5	Program GEQ	15
5.6	Program AMSOL	15
5.7	Program AICSUB	15
5.8	Program GIN	16
5.9	Program SAMODE	17
6.0	COMPUTER PROGRAM USAGE	18
6.1	Control Cards	18
6.2	Resource Estimates	19
6.2.1	Field Length	19
6.2.2	Execution Time	20
6.2.3	Printed Output	20
6.2.4	Tape Drives	21
6.2.5	Disk Storage	21
6.3	Input Data	21
6.3.1	Format of Card Input Data	21
6.3.2	Card Input Data Specifications	21
6.3.3	Summary of Card Input Data	47
6.3.4	Magnetic Files Input Data	49
6.4	Output Data	49
6.4.1	Printed Output Data	50
6.4.2	Magnetic Files Output Data	50

CONTENTS (Concluded)

Page

6.5 Restrictions 58
6.6 Diagnostics 58
6.6.1 L216 Error Codes 62
6.6.2 READTP Error Codes 64
6.6.3 WRTETP Error Codes 64

7.0 SAMPLE PROBLEM 66
7.1 Input Data 66
7.1.1 Parameters and Geometry 66
7.1.2 Modal Data 69
7.2 Sample Problem Input and Output 70

REFERENCES 118

TABLES

No.		Page
1.	Chord Division–Reduced Frequency Relationship	11
2.	Examples of Resource Utilization	20
3.	Number of Matrices Stored on NAETP	58
4.	Sample Problem Panel Geometry	68

FIGURES

No.		Page
1.	Displacement Sign Convention for DUBFLX	8
2.	Examples of Aerodynamic Modeling	10
3.	Overlay Structure of Program L216	13
4.	External Data File Communication	14
5.	L216 Card Input Data Flow	22
6.	Panel Geometric Nomenclature	33
7.	Slender Body Geometric Nomenclature	34
8.	Radial Origin Definition	39
9.	Map of Magnetic File SATAP	49
10.	Geometry Definition Tape "NGETP"	51
11.	Geometry Control Matrix [MPC]	52
12.	Body Table Matrix [BODTAB]	53
13.	Primary Lifting Surface Geometry Matrix [MPSG]	54
14.	Interference Lifting Surface Geometry Matrix [MISG]	55
15.	Slender Body Geometry Matrix [MSBG]	56
16.	Interference-Surface/Slender-Body Correlation Matrix [MSBC]	57
17.	Aerodynamics Results Matrix (IAERO=1)	59
18.	Aerodynamic Results Matrix (IAERO=2)	60
19.	Aerodynamic Results Control Matrix	61
20.	Configuration for Example Problem	67

1.0 SUMMARY

This document describes the computer program L216 (DUBFLX), and contains the following:

- Summary of analytical development
- Outline of the program structure
- Specification of information necessary for execution of the program
  - Control cards
  - Required resources
  - Input data
- Description of program output
- Listing of program restrictions
- Listing of error diagnostics
- Description of sample problem

Program L216 computes three-dimensional, subsonic, unsteady aerodynamic characteristics for arbitrary configurations that can be modeled as combinations of lifting surfaces and slender bodies. Input to the program consists of configuration geometry and aerodynamic condition specifications read from cards, and modal data, which may be either read directly from cards or interpolated from arrays of modal coefficients read from an externally developed magnetic file.

Computations are based on a finite constant pressure panel concept, the doublet lattice method. The primary function of the program is to evaluate the kernel expression in the integral equation relating pressure and normalwash on lifting surfaces. If modal data is supplied, the geometric normalwash may be determined and pressures and generalized air forces calculated. The pressures may be integrated with appropriate weighting factors to produce normal forces, moments, and stability derivatives.

Optionally the user may file for subsequent utilization, geometric data, matrices of normalwash factors (used in aerodynamic influence coefficient-type calculations), and/or pressures and generalized force arrays.

2.0 INTRODUCTION

Computer program L216 (DUBFLX) may be used as either a standalone program or a module of the program system DYLOFLEX (ref. 1). Program L216 is a modification, accomplished under contract NAS1-13918 to satisfy contract requirements developed in reference 2, of the program described in reference 3. The theoretical formulation and the equation solution method is that of reference 3.

Modifications necessary to satisfy the requirements of DYLOFLEX included:

- *Addition of modal interpolation routines*
- Modification of input and output (contents and formats)
- Improvement of internal documentation (commenting)

3.0 SYMBOLS AND NOMENCLATURE

The following list contains items that appear in this document except section 6.3 (card input).

Engineering notation	Definition
A	Reference area (length^2).
c, c_r	Local, reference chord length.
c_n, c_m	Section normal force, moment coefficients.
C_Z, C_Y	Normal, side force coefficients.
c_m, c_n, c_ℓ	Pitching, yawing, rolling moment coefficients.
ΔC_P	Pressure difference coefficient.
ΔC_Z, ΔC_Y	Slender body pressure coefficients.
D_{rs}	Element of matrix of normalwash factors–lifting surface on lifting surface.
e	Element semiwidth.
F_{rs}	Element of matrix of normalwash factors–slender body on lifting surface.
f	Mode shape.
g^f	Slender body off the plane-of-symmetry factor.
h	Modal displacement.
i	$\sqrt{-1}$.
k	Reduced frequency ($\omega c_r / V_T$) (radians).
$K(x,y,x,\omega,M)$	Kernel function.
M	Mach number.
q	Generalized coordinate.
Q	Generalized force.
$R_0(x)$	Radius of slender body (length).

s	Reference semispan (length).
V_T	Aircraft velocity (length/sec).
$w(x,y,z)$	Normalwash.
$w_B(x,y,z)$	Normalwash induced by slender bodies.
w_R	Augmented normalwash.
x,y,z	Surface coordinates; receiving point coordinates.
Δx	Element length.
γ	Element dihedral angle (radian).
δ	Symmetry factor ($Y = 0$).
ϵ	Symmetry factor ($Z = 0$).
ξ,η,ς	Element coordinates; sending point coordinates.
ξ	Streamwise coordinate.
σ	Spanwise coordinate.
τ	Radial coordinate.
ϕ	Modal translational deflection.
ϕ'	Streamwise derivative of the modal translational deflection = $d\phi/dx$.

Subscripts

a	Axial line element.
B	Slender body.
i	Modal degree of freedom.
j,k,ℓ	Strip, box, line doublet elements.
le	Leading edge.
r,s	Receiving, sending elements.
R	Reference.

Superscripts

(f)	Slender body.
	Differentiation, d/dx.

Matrix Symbols

$\lceil\ \rfloor$	Diagonal matrix.
[ ]	Rectangular matrix.
{ }	Column matrix.

4.0 ENGINEERING DESCRIPTION

A complete theoretical development is contained in reference 3 Pertinent equations and solution methods are discussed in this document in section 4.1 and applications in section 4.2.

4.1 SUMMARY OF THEORETICAL DEVELOPMENT

4.1.1 EQUATIONS

Consider a linearized representation of three-dimensional subsonic unsteady compressible flow. Given these assumptions, the velocity normal to an oscillating surface is related to the lifting pressure by the integral equation:

$$w(x,y,z) = \frac{1}{8\pi}\iint_{LS} K(x-\xi,y-\eta,z-\zeta,\omega,M)\ \Delta C_P\ d\xi\ d\sigma \tag{1}$$

Discretizing the expression (i.e., assuming that the lifting surfaces can be approximated by segments of planes that are divided into small trapezoidal elements), the integral equation may be approximated as:

$$w(x,y,z) = \frac{1}{8\pi}\sum_s \Delta C_{P_s}\iint_s K(x-\xi,y-\eta,z-\zeta,\omega,M)\ d\xi\ d\sigma \tag{2}$$

A further approximation in the doublet lattice method is that the integration of the kernel expression in the streamwise direction is accomplished by lumping the effect at the 1/4 chord of each element:

$$w(x,y,z) = \frac{1}{8\pi}\sum_s \Delta C_{P_s}\ \Delta\xi \int_s K(x-\xi_{1/4},y-\eta,z-\zeta,\omega,M)\ d\sigma \tag{3}$$

A set of linear algebraic equations may be formed from the relationships above and written in matrix form:

$$\{w\} = [D]\ \{\Delta C_P\}$$

where a typical element of $[D]$ is:

$$D_{rs} = \frac{\Delta\xi}{8\pi}\int_s K(x-\xi_{1/4},y-\eta,z-\zeta,\omega,M)\ d\sigma \tag{4}$$

If slender body interference effects are to be considered, the incremental normalwash on lifting surfaces in the presence of slender bodies is calculated using Woodward's method of interference surfaces to determine lifting surface/slender body interaction effects. Proceeding analogously as with the preceding equations:

$$w_B(x,y,z) = \frac{1}{2\pi}\sum_s \Delta C_{Z_s} R_{0_s} \Delta\xi_s K_{Z_s}(x-\xi_{a_s}, y-\eta_a, z-\zeta_a, \omega, M)$$

$$+ \frac{1}{2\pi}\sum_s \Delta C_{Y_s} R_{0_s} \Delta\xi_s K_{Y_s}(x-\xi_{a_s}, y-\eta_a, z-\zeta_a, \omega, M) \tag{5}$$

This system of equations may be written in matrix form:

$$\{w_B\} = [F_Z]\{\Delta C_Z\} + [F_Y]\{\Delta C_Y\}$$

where typical elements of the $[F]$ are:

$$F_{rs} = \frac{1}{2\pi} R_{0_s} \Delta\xi_s K_{rs} \tag{6}$$

where ΔC_Y and ΔC_Z are components of $\Delta C_P^{(f)}$, determined using slender body theory:

$$\Delta C_P^{(f)} = 2\pi(R'_0 w^{(f)} + w^{(f)\prime} R_0/Z + ik_r\, w^{(f)} R_0/c_r) \tag{7}$$

Then, for lifting surfaces with the effect of axial singularities introduced:

$$\{w_R\} = \{w - w_B\} = [D]\{\Delta C_P\} \tag{8}$$

Equation (8) is the form used to determine pressure differences on lifting surfaces considering the interference effects of slender bodies.

4.1.2 SOLUTION METHOD

Procedure

1. Matrices of normalwash factors $[D]$ and $[F]$ are determined using equations (4) and (6), respectively.

2. Geometric normalwash for slender bodies is specified and $\Delta C_P^{(f)}$ determined using equation (7).

3. Normalwash induced on lifting surfaces by slender bodies is calculated using equation (5).

4. Geometric normalwash for lifting surfaces is specified and combined with induced normalwash to form the augmented normalwash on lifting surfaces, w_R.

5. Pressures on lifting surfaces are obtained by direct solution of equation (8).

Evaluation of the Kernel Function Expression

Landahl's expression for a nonplanar kernel function is used. In order to achieve increased accuracy, the kernel is separated into two parts: the steady component which may be integrated directly, and the unsteady increment which is evaluated approximately by fitting the kernel expression with a parabolic function and integrating analytically. In steady flow, the line of doublets is equivalent to a horseshoe vortex whose bound portion lies on the 1/4-chord line of the element.

Normalwash Boundary Condition

The boundary condition is merely the substantial derivative of the surface deformation, and for harmonic motion:

$$\{w\} = -\left[[\phi'] + \frac{i\omega}{V_T}[\phi]\right]\{q\} \tag{9}$$

where

$[\phi]$ = mode shapes which define translational displacements in the y or z direction

$[\phi']$ = the streamwise derivative of the mode shapes = d/dx $[\phi]$

The displacement sign convention used in DUBFLX is shown in figure 1

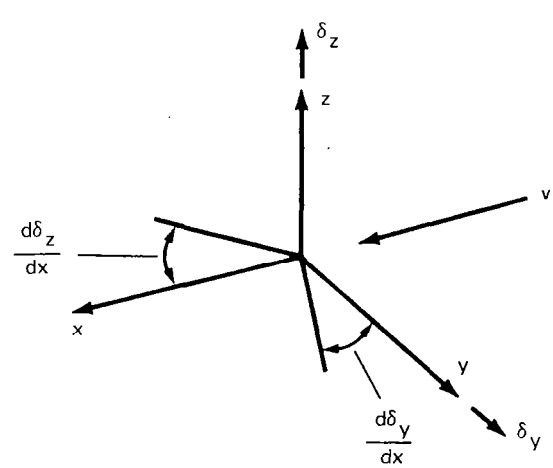

Figure 1.—Displacement Sign Convention for DUBFLX

For lifting surface elements, the translational displacement used in equation (9) must be normal to the surface. Slender body translational displacements can be either in the z or y direction depending upon the type of doublets associated with the slender body. The normalwash control points for slender body line elements are the midpoint locations; numerical experimentation indicates that the Kutta condition will be satisfied for lifting surfaces if the normalwash control point is chosen as the element midspan 3/4-chord point.

A slender body does not induce normalwash on the particular interference lifting surface associated with itself. An interference lifting surface does not produce lift due to its own motion; only the normalwash induced on these surfaces by other aerodynamic elements produces lift.

When using doublet lattice in the DYLOFLEX system, the modal data used in equation (9) may be input in either one of three ways:

- Defining a set of polynomials
- Using modal interpolation arrays
- Tabulating the displacements and slopes on cards

The polynomials define the displacements as functions of the x and y coordinate of the surface. They are described by the user inputting on cards the order of the polynomial and the coefficients of each term of the polynomial. The modal interpolation (SA) arrays are generated by L215(INTERP) (ref.4). These arrays are read from magnetic file and used with the DUBFLX geometry data to determine the needed displacements and slopes. Finally, the tabular modal input consists of inputting via cards the displacements and slopes at each control point. In all cases, the modal displacements must be defined consistant with the sign convention shown in figure 1.

When using DUBFLX independent from the DYLOFLEX system, an alternate method does exist in L216 to describe the mode shapes. The doublet lattice program has a set of internally defined modes which the user may choose to use. However, the modes are inconsistant with the DYLOFLEX sign convention and are only defined for box control points.

4.2 APPLICATION

4.2.1 MODELING IDEALIZATIONS

Arbitrary configurations are idealized as primary lifting surfaces (wing, tail, nacelle duct, control surface, etc.), slender bodies (fuselage, store, etc.), and, associated with individual slender bodies, interference lifting surfaces (see fig. 2).

Primary lifting surfaces are represented by a series of planar segments, each of which is a collection of small trapezoidal elements arranged in strips parallel to the free stream; the pressure is constant over each element, and the resultant force is assumed to act at the midspan 1/4-chord location. Slender bodies, axially symmetric bodies with linearly varying radii, are represented with a system of line doublets located on the centerline of

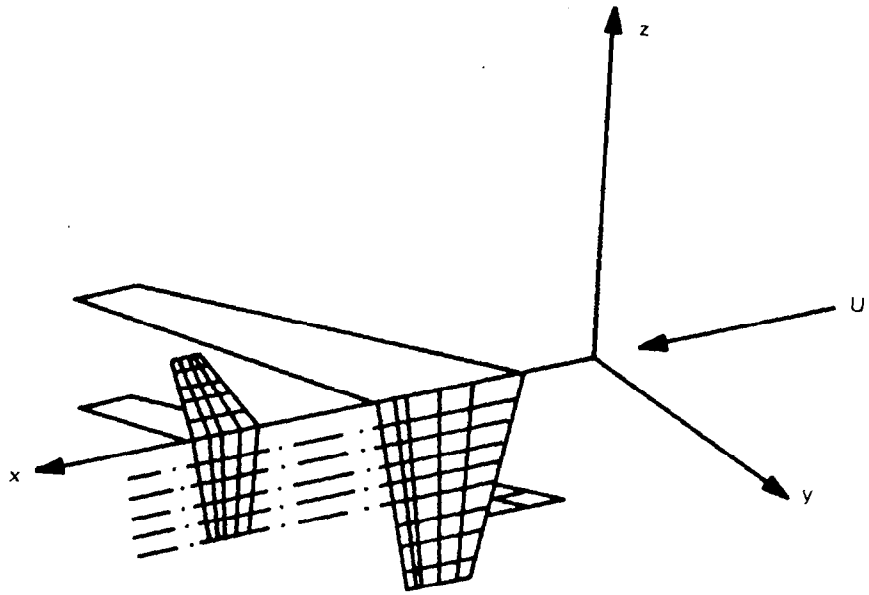

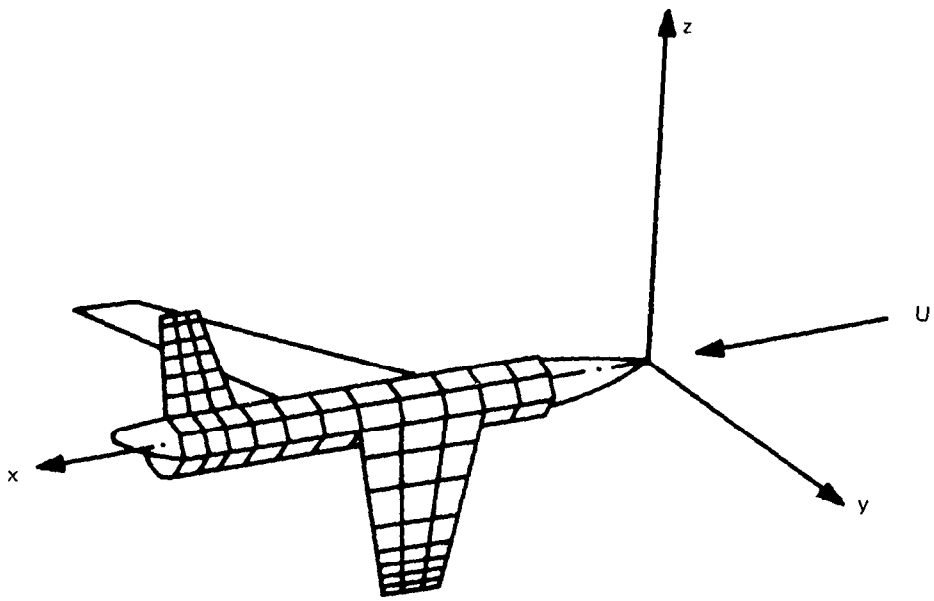

Figure 2. – Examples of Aerodynamic Modeling

revolution; the resultant force is assumed to act at the midpoint location. Interference lifting surfaces are considered as surfaces of revolution with constant cross-sectional shapes discretized just as primary lifting surfaces are.

A comprehensive list of rules governing the discretization of the basic aerodynamic components (lifting surfaces, slender bodies, and interference surfaces) is presented on pages 49 and 50 of reference 3. A brief summary follows.

1. Lifting surface trapezoidal elements (boxes) are arranged in strips paralled to the freestream.

2. Aspect ratio of the boxes should not be large; for the unsteady case an aspect ratio of order unity is recommended.

3. Surface intersections and edges, fold lines, and hinge lines should coincide with box boundaries.

4. Streamwise box length should be small relative to the basic wave length (see table 1).

5. Boxes should be concentrated in regions where span loading changes rapidly or where normalwash boundary conditions are discontinuous.

6. For planar or almost-planar wing-tail problems, spanwise boundaries on the tail must align with those on the wing.

7. The radial distance between a normalwash control point and a box edge may not approach zero.

Table 1.—Chord Division—Reduced Frequency Relationship

Reduced frequency	Chord divisions
0.5	4
1.0	8

Note: Chord divisions based on relationship

$$\frac{\Delta x}{c} = \frac{\pi}{25\,k_r}$$

4.2.2 LIMITATIONS

The doublet lattice method is subject to the limitations (common to other subsonic lifting surface methods) involved in formulation of the basic theoretical aerodynamic equations and of the kernel function expression. Accordingly, with these limitations, the theoretical modeling is restricted to a linear representation of inviscid subsonic flow, and behavior of the kernel function deteriorates at high subsonic Mach numbers as flow approaches the transonic range.

In addition, within this context two further approximations are made in the doublet lattice method. One is concerned with the approximate evaluation of the kernel function using a parabolic curve fit; this procedure, utilizing only a second order function, is less exact than that developed in the kernel function methods using higher order functions. It appears that this is not a major limitation. More significant is the assumption that an aerodynamic surface can be represented by a system of line segments of acceleration potential doublets for the purpose of calculating lift distributions. Practical problems associated with application of the doublet lattice method primarily involve this approximation; i.e., it is apparent that aircraft idealization is a critical factor governing the validity and accuracy of computed results.

5.0 PROGRAM STRUCTURE AND DESCRIPTION

Program L216 (DUBFLX) is constructed as an overlay system consisting of a main overlay and eight primary overlays.

(L216,0,0) L216

(L216,1,0) INITIAL

(L216,2,0) PRT2

(L216,3,0) GEWSSL

(L216,4,0) GEQ

(L216,5,0) AMSOL

(L216,6,0) AICSUB

(L216,7,0) GIN

(L216,8,0) SAMODE

The main overlay, program L216, performs file addition and deletion, and calls the primary overlays as requested. Primary overlays INITIAL, PRT2, GEQ, AMSOL, GIN, and SAMODE are called for the typical problem. Primary overlays INITIAL, PRT2, GEWSSL, AMSOL, and AICSUB are called for the AIC problem.

This program requires subroutines that are not part of the L216 code. Some are automatically obtained from the standard FORTRAN library when the program is loaded. Others are stored in the DYLOFLEX alternate subroutine library, which must be declared at the time of loading. When the program is run as a standalone program, it is the responsibility of the user to generate input data in the format required by L216. Schematics of the L216 overlay structure and file communcations are presented in figures 3 and 4. The following is brief description of each overlay.

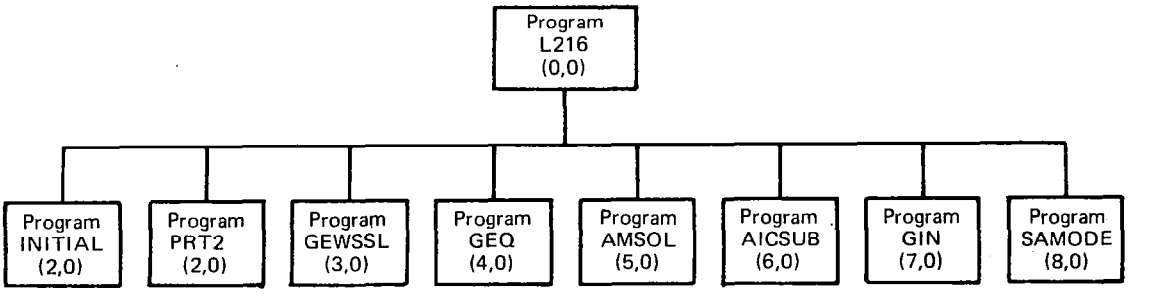

Figure 3.—Overlay Structure of Program L216

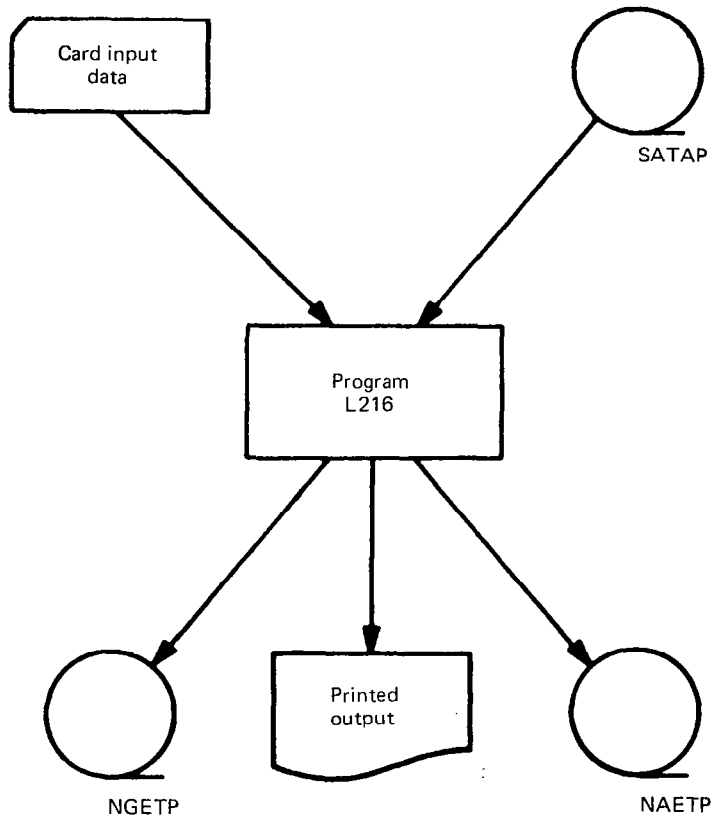

Figure 4.– External Data File Communication

5.1 PROGRAM L216

This program intializes and deletes scratch files, reads input data, and calls the required primary overlays for solution and output data generation. The following keywords are used; the underlined characters are required.

$DUBLAT	Indicates that input data following is for use by L216
$TITLE	Printed and ignored
$QUIT	Terminates execution

5.2 PROGRAM INITIAL

This program reads card input data for geometric and modal definitions, computes detailed geometric data, processes modal input, and stores geometric data for subsequent use in DYLOFLEX. The following keywords are used.

REDUCED FREQUENCIES	Introduces k-value array
GEOMETRY	Introduces geometric data set
PANEL	Defines lifting surface geometric/modal data
BODY	Defines slender body geometric/modal data
MODES	Indicates modal data set

5.3 PROGRAM PRT2

This program evaluates the kernel function to form the matrix of normalwash factors, $[D]$, for lifting surface elements, modifies the factors for symmetry, and writes the matrix of normalwash factors on scratch tape for later use. The kernel function expression is defined in reference 4 (appendices A, B and C).

5.4 PROGRAM GEWSSL

This program computes normalwash column vectors, $\{w_{AIC}\}$, for each of the preselected AIC modes, combines these column vectors with the matrix of normalwash factors, $[D]$, to form the augmented matrix of normalwash factors, $[D|\, w_{AIC}]$, and writes the matrix on scratch tape for subsequent use. The preselected AIC modes option is described in reference 4 (sections 2.5, 2.6, and appendix D). The program generates AIC's for lifting surfaces only; slender body elements are ignored.

5.5 PROGRAM GEQ

This program computes the normalwash matrix for all non-AIC analyses. If slender bodies are considered, matrix of induced normalwash factors, $[F]$, slender body pressure coefficients, ΔC_P^I, and the induced normalwash, Δw_B, are calculated. The augmented normalwash, $[w_R]$, is determined and the augmented matrix of normalwash factors $[D|w_R]$ formed. The augmented normalwash and normalwash factors matrices are stored for subsequent use.

5.6 PROGRAM AMSOL

This program uses the quasi-inverse method to solve the simultaneous set of equations for the pressure on lifting surface elements.

5.7 PROGRAM AICSUB

This program calculates and prints the stability derivatives and pressure coefficients for the AIC option. Additionally, for this option, the program computes and prints harmonic gust coefficients. Analytic development of the gust matrix is described in reference 4, section 2.5.

5.8 PROGRAM GIN

This program computes and prints the pressure coefficients, section normal force and moment coefficients, total lift and moment coefficients, and generalized forces. Aerodynamic results required for later use in the DYLOFLEX system are stored on file.

Section coefficients on strip j per mode i:

$$c_{n_{ji}} = \frac{1}{C_j} \sum_k \Delta C_{P_{ki}} \Delta x_k$$

$$c_{m_{ji}} = \frac{1}{C_j^2} \sum_k \Delta C_{P_{ki}} \Delta x_k \left(x_{c/4_k} - x_{le_j}\right) \tag{10}$$

Force coefficients on body f per mode i:

$$C_{Z_i}^{(f)} = \frac{2}{A} \sum_\ell R_{0_\ell} \Delta x_\ell \Delta C_{P_{\ell_i}}^{Z}$$

$$C_{Y_i}^{(f)} = \frac{2}{A} \sum_\ell R_{0_\ell} \Delta x_\ell \Delta C_{P_{\ell_i}}^{Y} \tag{11}$$

Total force and moment coefficients per mode i:

$$C_{Z_i} = (1 + \delta) \left[\frac{1}{A} \sum_j 2e_j \cos \gamma_j c_j c_{n_{ji}} + \sum_f g^{(f)} C_{Z_i}^{(f)}\right]$$

$$C_{Y_i} = (1 - \delta) \left[-\frac{1}{A} \sum_j 2e_j \sin \gamma c_j c_{n_{ji}} + \sum_f g^{(f)} C_{Y_i}^{(f)}\right]$$

$$c_{m_i} = \frac{(1 + \delta)}{A c_r} \sum_j \left[c^2 c_{m_{ji}} - c c_{n_{ji}} (x_{le_j} - x_R)\right] 2e_j \cos \gamma_j$$

$$- \sum_f g^{(f)} \sum_\ell 2R_{0_\ell} \Delta x_\ell C_{P_{\ell_i}}^{Z} (x_{le_\ell} - x_R) \tag{12}$$

$$c_{n_i} = -\frac{(1 - \delta)}{A c_r} \sum_j \left[c^2 c_{m_{ji}} - c c_{n_{ji}} (x_{le_j} - x_R)\right] 2e_j \sin \gamma_j$$

$$+ \sum_{(f)} g^{(f)} \sum_\ell 2R_{0_\ell} \Delta x_\ell \Delta C_{P_{\ell_i}}^{Y} (x_{le_j} - x_R)$$

$$c_{\ell_i} = -\frac{(1 - \delta)}{2s} \frac{1}{A} \sum_j c c_{n_{ji}} 2e_j (y_j \cos \gamma_j + z_j \sin \gamma_j)$$

$$+ \sum_{(f)} g^{(f)} \left(C_{Z_i}^{(f)} y_c^{(f)} + C_{Y_i}^{(f)} Z_c^{(f)}\right)$$

Generalized force coefficients (half airplane):

$$Q_{ik} = \frac{1}{s^2} \sum_k 2\Delta C_{P_{ki}} \; f_{ki} \; \Delta x_R e_k$$

$$+ \sum_f g^{(f)} \sum_\ell 2\Delta C_{P_\ell}{}^{(f)} \; f_{\ell i} \Delta x_\ell \; R_{o_\ell} \tag{13}$$

where:

$g^{(f)}$ = 1–Bodies on the plane of symmetry
= 2–Bodies off the plane of symmetry

The generalized aerodynamic forces defined by equation (13) are calculated on the right hand side of the equations of motion as defined in L217 (EOM) (ref. 5).

5.9 PROGRAM SAMODE

This program uses the SA (interpolation) arrays generated by L215 (INTRFP) to determine required modal data. For each lifting surface and slender body, the program reads the SA array, interpolates, calculates the modal displacements and slopes, and computes the generalized force integration matrix [BQ]. The modal data and integration matrix are stored on a random access file for subsequent use.

The following is the element of integration matrix (box k/line element ℓ, mode i).

$$B_{ki} = \frac{1}{s^3}(2e_k \; \Delta x_k \; h_{c/4_{ki}}) \qquad h_{ki} = s\phi_{ki} q_i$$

$$B_{\ell_i} = \frac{1}{s^3}\left(R_{0_{\ell_i}} \Delta x_{\ell_i} h \left[\frac{\Delta x}{2}\right]_{\ell_i}\right) \qquad s = 1.0 \tag{14}$$

6.0 COMPUTER PROGRAM USAGE

The program was designed for use on the CDC 6600. The machine requirements to execute L216 are:

Card reader	To read control cards and card input data
Printer	To print standard output information, optional intermediate calculations, and diagnostic messages
Disk storage	All sequential magnetic files not specifically defined as magnetic tapes are assumed to be disk files. The scratch random access file is always a disk file.
Tape drive	For "permanent" storage of data, magnetic files are copied to and from magnetic tapes with control cards before and after program execution

The program L216 is written in FORTRAN IV and complied with the "FTN" compiler. L216 may be executed on the KRONOS 2.1 operating system.

6.1 CONTROL CARDS

The following list is a typical set of control cards used to execute L216 using the absolute binaries from the program's master tape.

```
Job card
Account card
   •
   •
   •
REQUEST(MASTER, F=I,LB=KL,VSN=6 6XXXX)   { Retrieve the
REWIND(MASTER)                           { program from its
SKIPF(MASTER)                            { master tape
COPYBF(MASTER,L216)
RETURN(MASTER)
   •
   •                                     { Prepare optional
   •                                     { input data files
 L216.                                   { Execute L216 (DUBFLX)
   •
   •                                     { Save optional output
   •                                     { data files
EXIT.
DMP(0,field length)
--- End-of-record
 [ Card input data ]
--- End-of-file
```

The following list is a typical set of control cards used to execute L216 using the relocatable binaries from the program's master tape.

```
Job card
Account card
   •
   •
   •
REQUEST(MASTER, F=I,LB=KL,VSN=66XXXX)   { Retrieve the program
REWIND(MASTER)                          { from its master tape
SKIPF(MASTER,2)
COPYBF(MASTER, REL216)
RETURN(MASTER)                          { Prepare optional input files and
   •                                    { retrieve DYLIB, the DYLOFLEX
   •                                    { alternate subroutine library
   •
LDSET(LIB=DYLIB,
PRESET=INDEF)                           { Load and Execute
LOAD(REL216)                            { L216(DUBFLX)
NOGO.
RETURN(REL216,DYLIB)
L216.
   •                                    { Save optional output
   •                                    { data files
   •
EXIT.
DMP(0,field length)
---End-of-record
[ Card Input Data ]
---End-of-file
```

6.2 RESOURCE ESTIMATES

The computer resources utilized (core requirements, types, printed output, time, etc.) are a function of problem size. Table 2 shows examples of resources used for some problems of varying size.

6.2.1 FIELD LENGTH

Program L216 requires a field length of 76 000 octal words to load; execution requires a minimum of 132 000 octal words.

During computation of the inverse of the kernel function matrix, partitions are formed whose size depends on the core available in blank common. The number of input/output operations varies as the number of partitions. There is a trade-off between central processor time and field length for cases involving a large number of aerodynamic elements.

Table 2.—Examples of Resource Utilization

	Example				
	1	2	3	4	5
Number of reduced frequencies	2	2	1	1	1
Number of lifting surface boxes	32	52	102	162	225
Number of slender body elements	6	10	0	0	0
Number of modal degrees of freedom	3	3	1	1	1
CPU seconds	13	24	23	67	157
Disk requests	469	590	349	582	845
Disk sectors	8184	9150	7344	8942	14836
Required core	143000	149000	162000	178000	197000
Printed lines (NPFM = 1)	1827	2180	1697	2095	3098

An equation to determine the recommended field length is:

$$\text{Field length} = (132000)_8 + (120^*\text{NTOT})_{10}$$

where NTOT is the total number of aerodynamic elements (lifting surface boxes and slender body line elements).

6.2.2 EXECUTION TIME

The time required to compute unsteady aerodynamic characteristics per specified reduced frequency value depends primarily on the number of aerodynamic elements, secondarily on the field length. Problem computational time increases roughly as the square of the number of elements. Table 2 includes the CPU times for some variously sized problems.

6.2.3 PRINTED OUTPUT

The number of lines of printed output varies with problem size and specified print options. The maximum number of lines printed per reduced frequency is approximately 10 000 when the checkout print option is specified. Table 2 includes the line count for some examples.

6.2.4 TAPE DRIVES

A magnetic tape drive is required if the program is accessed from a master tape. One tape drive may be needed for modal input, two for saved aerodynamic and geometric data files.

6.2.5 DISK STORAGE

L216 uses internal scratch files. Two of these are random access files (TAPE8 and TAPE9); the others are sequential

6.3 INPUT DATA

Input data for program L216 chiefly consists of card input data from file INFIL (TAPE5) optionally supplemented by modal data from file SATAP.

A summary of the card input data is given at the end of this section. This summary, a quick reference for the necessary card input, is included for the convenience of users having attained familiarity with the program.

The alternative forms of unsteady aerodynamic results specified for output have an impact on the input card sequence. The order in which cards are input is shown in figure 5.

6.3.1 FORMAT OF CARD INPUT DATA

Card data is read in fixed fields and specific columns of the cards as indicated on the pages following. The following conventions, with the exceptions noted, are general throughout the program.

1. Floating point variables are read with format E10.0.

2. With the exceptions of cards 13.1, 13.2, and 15.1, integer variables are read with format I5.

3. Hollerith variables (keywords, etc.) are read with format A10.

Only the first five characters of keywords are checked for recognition.

6.3.2 CARD INPUT DATA SPECIFICATIONS

All card sets must be present except as noted. Unspecified columns on any card may be used for comments. The underlined five characters in keywords must be present.

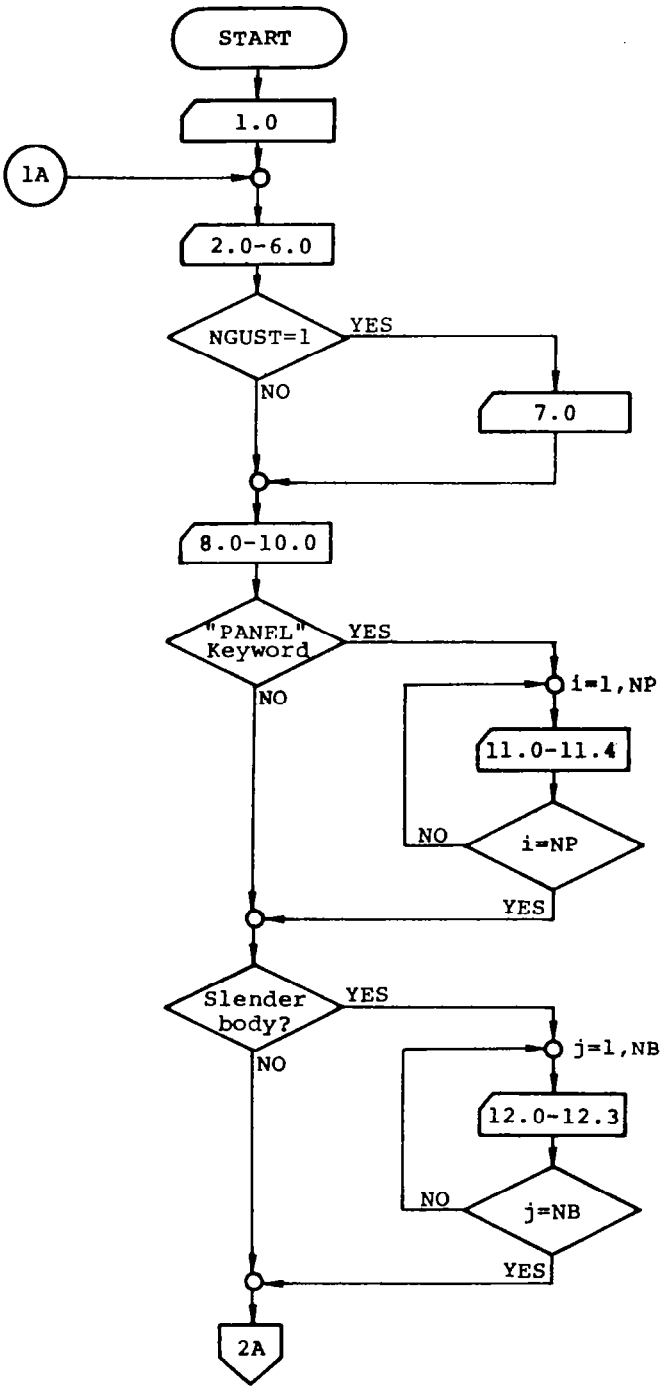

Figure 5. – L216 Card Input Data Flow

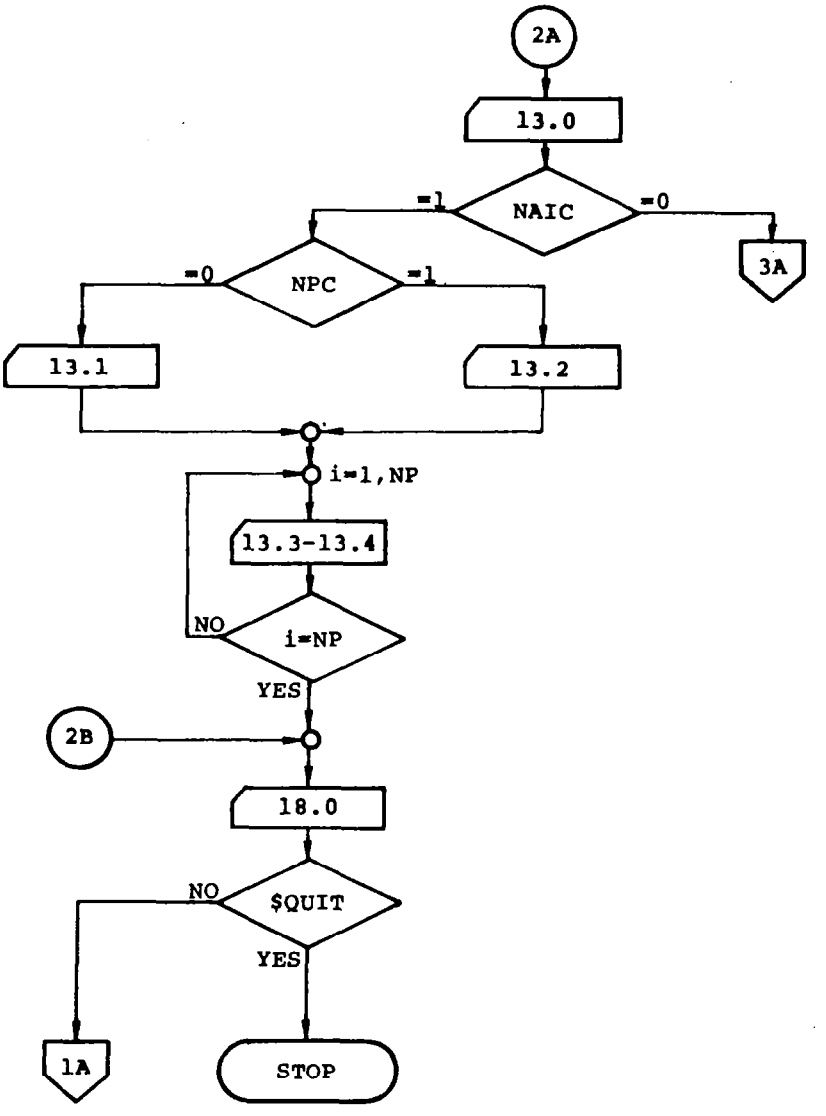

Figure 5.—(Continued)

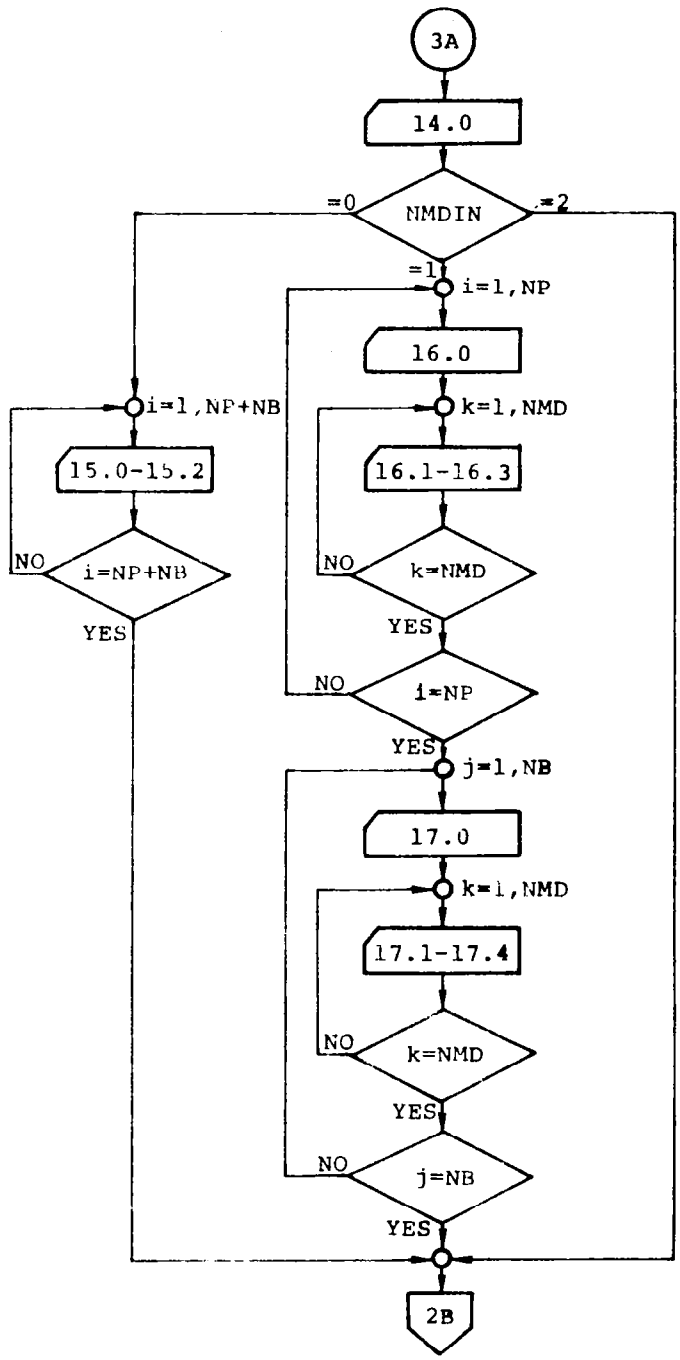

Figure 5.—(Concluded)

Card Set 1.0–L216 Data Set Initiation

COLS.	KEYWORD/ VARIABLE	FORMAT	DESCRIPTION
1-10	$DUBLAT	A10	Introduces L216 card input data set - must be the first card read by L216
11-70			Available for comments

The following cards (2.0 through 17.4) are repeated for each data case.

Card Set 2.0–Title

COLS.	KEYWORD/ VARIABLE	FORMAT	DESCRIPTION
1-10	$TITLE	A10	Introduces case title and comments
11-70			Available for comments. Intended as case title and label for printed output. Printed at beginning of output listing for current case
The number of $TITLE cards is unlimited			

Card Set 3.0–Case Identification

COLS.	KEYWORD/ VARIABLE	FORMAT	DESCRIPTION
1-10	CASE	A10	Introduces input data for current case.
11-15	ICASE	I5	Case number for current data set ($1 \leq$ ICASE ≤ 36)
16-20			Not used
21-30	CHECKOUT	A10	Requests checkout printing This option overides all print flags and a large amount of intermediate data is printed. Generally not exercised.
31-35	ICOND	I5	Condition number (= Case number)
36-70			Available for comments

Card Set 4.0–Condition and Configuration Constants

COLS.	KEYWORD/ VARIABLE	FORMAT	DESCRIPTION
1-10	FMACH	E10.0	Mach number, $(0 \leq FMACH < 1.0)$
11-20	ACAP	E10.0	Reference area (length^2) Used in calculation of stability derivatives
21-30	REFCHD	E10.0	Reference chord (length) Used in calculation of section coefficients and stability derivatives
31-40	REFSPN	E10.0	Reference semispan (length) Used as normalizing factor for generalized force coefficients, also appears in expression for rolling moment coefficient. If modal input is via SATAP or if output aerodynamic data is intended for subsequent use in DYLOFLX, value must be unity (s = 1.0).
41-45	NDELT	I5	Symmetry flag (Plane Y = 0) = 1 symmetric = -1 anti-symmetric = 0 non-symmetric
46-50	NP	I5	Number of panels on all lifting (primary and interference) surfaces, $(0 \leq NP \leq 40)$
51-55	NB	I5	Number of slender bodies $(0 \leq NB \leq 20)$ If a body has motion in both Y and Z directions (e.g., nacelle), It is represented with two geometrically identical slender bodies, each to simulate motion in one of the two directions.
56-60	NRF	I5	Number of reduced frequency values for which aerodynamic characteristics are required, $(0 \leq NRF \leq 20)$

Card Set 5.0–Options and Tape Identification

COLS.	KEYWORD/ VARIABLE	FORMAT	DESCRIPTION
1-5	NDSV	I5	Flag to save geometric and aerodynamic data on files NGETP and NAETP = 0 Do not save = 1 Save
6-10	NAIC	I5	Flag indicating form of modal data* = 0 SA array from tape, tabular input, or Polynomial (card set 14) = 1 Preselected AIC modes (card set 13)
11-15	NDATA	I5	Flag to print matrix of downwash factors [D] = 0 Do not print = 1 Print
16-20	NSB	I5	Flag to print matrix(ces) of slender body induced downwash factors [APZ], [APY], and body induced downwash. $\{w_B\}$ = 0 Do not print = 1 Print
21-25	NDBG	I5	Flag to control printout = 1 Input geometry, and modal data, and downwash matrix results are printed = 2 Computed geometry and modal data are printed in addition to the data specified above = 3 Intermediate results associated with the analysis are printed in addition to the data specified above. This option is equivalent to the keyword CHECKOUT on card set 3.
26-30			Not used

*NAIC must be equal to 0 when DUBFLX is used in DYLOFLEX.

31-40	NAETP	A10	File name of the aerodynamic results to be stored. The file name must begin in column 31 with an alphabetic character and may contain up to seven characters. Each logical file contains all the aerodynamic results for one case. The first matrix of each logical file contains the control matrix for the aerodynamic data for the current case.
41-50	NGETP	A10	File name of the geometric results to be saved. The file name must begin in column 41 with an alphabetic character and may contain up to seven characters. Each logical file contains all the geometric data for each case. The first matrix contains the control matrix for the geometric data for the current case.

Card Set 6.0–AIC Data Flags and Other Options

COLS.	KEYWORD/ VARIABLE	FORMAT	DESCRIPTION
1-5	NSTRIP	I5	Total number of strips on all lifting (primary and interference) panels. ($1 \leq$ NSTRIP ≤ 70)
6-10	NBF	I5	Sequence number of the first strip. Omit if NAIC $\neq 1$ (card set 5)
11-15	NBL	I5	Sequence number of the last strip. Usually = NSTRIP Omit if NAIC $\neq 1$
16-20	NPR1	I5	Flag to print all AIC solution matrices $[D^{-1}W_{AIC}]$ = 0 Do not print = 1 Print
21-25	NPR2	I5	Flag to print AIC dimensional matrix $[C_h]_d$ = 0 Do not print = 1 Print
26-30	NPR3	I5	Flag to print AIC pressure coefficients and stability derivatives = 0 Do not print = 1 Print static stability derivatives = 3 Print static and dynamic stability derivatives If NPR3 = 3, NRF must be ≥ 2 and RFREQ(1) must be 0.0
31-35			Not used
36-40	NGUST	I5	Flag to compute generalized gust force matrix* = 0 Do not compute = 1 Compute This option is available only if NAIC = 1.

*This option can not be used in DYLOFLEX.

41-45	JSPECS	I5	Symmetry flag (Plane Z = 0) = 0 Non-symmetric = 1 Symmetric (biplane or jet) = -1 Anti-symmetric (ground effect)
46-50	NPC	I5	Mode selector for AIC generation = 0 Alternative 1 - (plunging, pitching, control surface and tab rotation) = 1 Alternative 2 - (three cambering modes, control surface and tab rotation) Omit if NAIC ≠ 1
51-55	NSV	I5	Total number of strips on all vertical panels that lie on the plane of symmetry Y = 0. Data for vertical panels lying on the plane Y = 0 must be input before data for other panels.
56-60	NBV	I5	Total number of boxes on vertical panels lying on the plane Y = 0.
61-65	NYAW	I5	Flag to control stability derivative calculations = 0 Pitch coefficients calculated = 1 Yaw coefficients calculated If on card set 4: NDELT = 0; NYAW = 0 or 1 NDELT = 1; NYAW = 0 NDELT = -1; NYAW = 1
NPR1, NPR2 and NPR3 must be 0 if NAIC ≠ 1. Strips are numbered consecutively from inboard to outboard per panel for all panels in the input order.			

Card Set 7.0–Gust Data Set

Omit card set 7.0 if NGUST = 0 (card set 6.0). This option can not be used in DYLOFLEX.

COLS.	KEYWORD/ VARIABLE	FORMAT	DESCRIPTION
1-10	GUST	A10	Introduces gust specification data
11-20	GZRO	E10.0	Gust reference plane dihedral angle (degrees) If GZRO = 0.0, gust velocities are in vertical direction
21-30	XZRO	E10.0	Gust reference point, location at which sinusoidal gust velocity is unity.
31-40	VEL	E10.0	Aircraft velocity (length/sec)
41-50	WG	E10.0	Vertical gust velocity at XZRO (length/sec)

Card Set 8.0–Strip-Box Correlation

COLS.	KEYWORD/ VARIABLE	FORMAT	DESCRIPTION
1-5	LIM(I,1)	I5	Number of first box on strip I
6-10	LIM(I,2)	I5	Number of last box on strip I
11-70		12I5	Repeat LIM 1 and 2 for all NSTRIP values using as many cards as necessary. Each card contains values for seven strips.
Boxes are numbered consecutively from leading edge to trailing edge per strip, spanwise per panel for all panels in the input order.			

Card Set 9.0–Reduced Frequency Data Set

COLS.	KEYWORD/ VARIABLE	FORMAT	DESCRIPTION
1-20	REDUCED FREQUENCIES	A10	Introduces array of reduced frequencies
21-70			Available for comments

Card 9.1–Array of Reduced Frequency Values

COLS.	KEYWORD/ VARIABLE	FORMAT	DESCRIPTION
1-10	RFREQ	E10.0	Reduced frequency $k = \omega c_r/_{2V}$ (radians)
11-70		6E10.0	Repeat RFREQ for all NRF values using as many cards as necessary. Each card contains up to seven values.

Geometric arrangements and nomenclature for lifting surfaces and slender bodies are illlustrated in figures 6 and 7, respectively.

The geometry data of cards 10.0 through 12.3 is defined in the reference axis system. If used in DYLOFLEX, this reference axis system should be the same as that used in INTERP, L215 (ref. 5). Proper aerodynamic modeling may require surfaces to be moved up or down, forward or back, or inboard or outboard from their actual location (fig. 6). When using the interpolation (SA) arrays from INTERP, control and force point locations on a surface, are transformed from the reference axis system to the surface's local axis system. To insure the proper transformation of these points, any shifting of the surface must be taken into account using the variables XSHIFT, YSHIFT, ZSHIFT on card set 11.0.

Card Set 10.0–Geometry Data Set

COLS.	KEYWORD/ VARIABLE	FORMAT	DESCRIPTION
1-10	GEOMETRY	A10	Introduces geometric input data set.
11-70			Available for comments.

Omit Cards 11.0 through 11.4 if no panels are defined. Repeat all panel data (cards 11.0 through 11.4) for each panel. All the panels on a lifting surface must be input consecutively. The data for the surfaces must be in the following order.

1. Primary lifting surface panels (e.g., wings, tails, etc.); panels on the Y = plane must appear first

2. Interference lifting surface panels

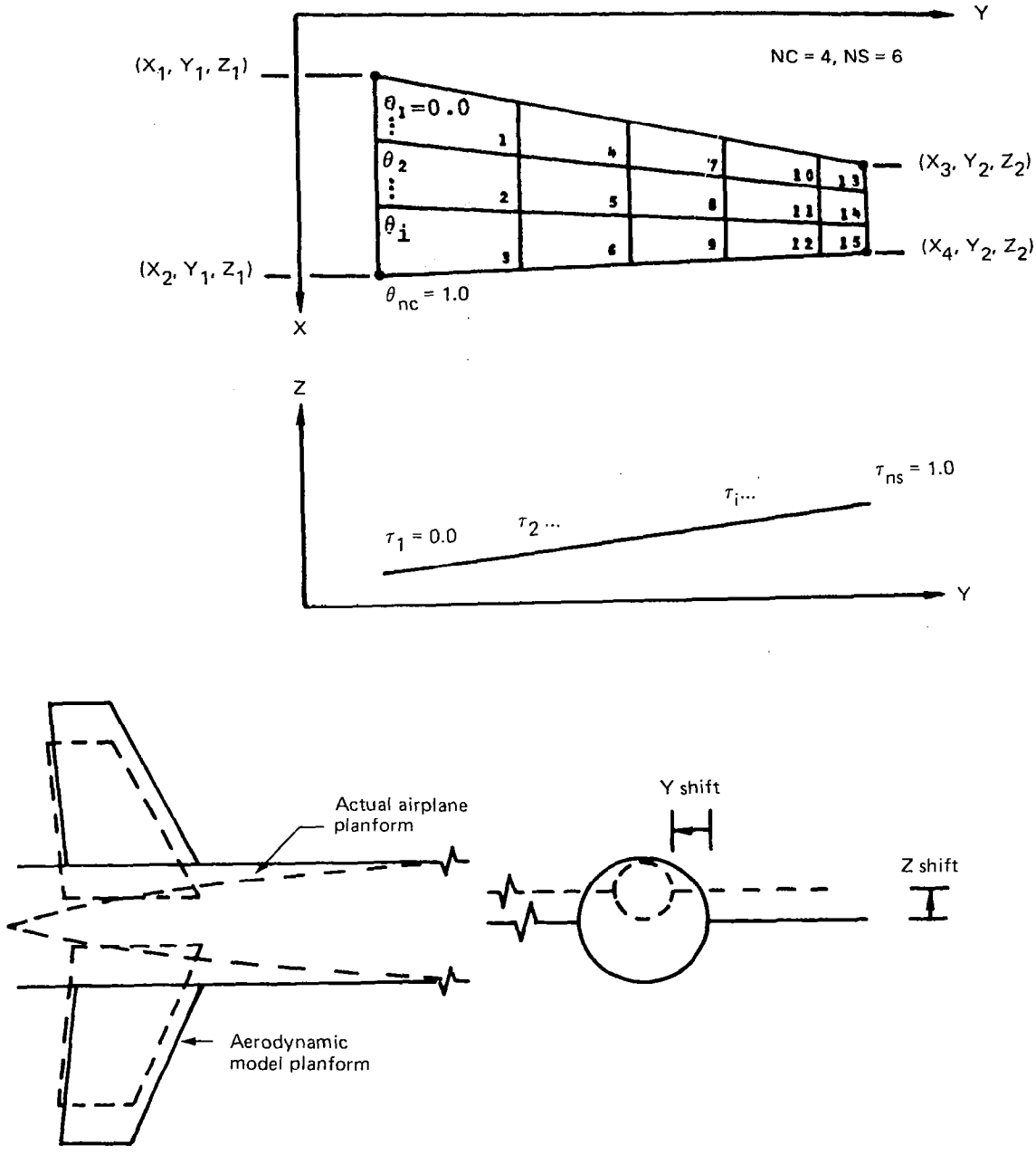

Figure 6.—Panel Geometric Nomenclature

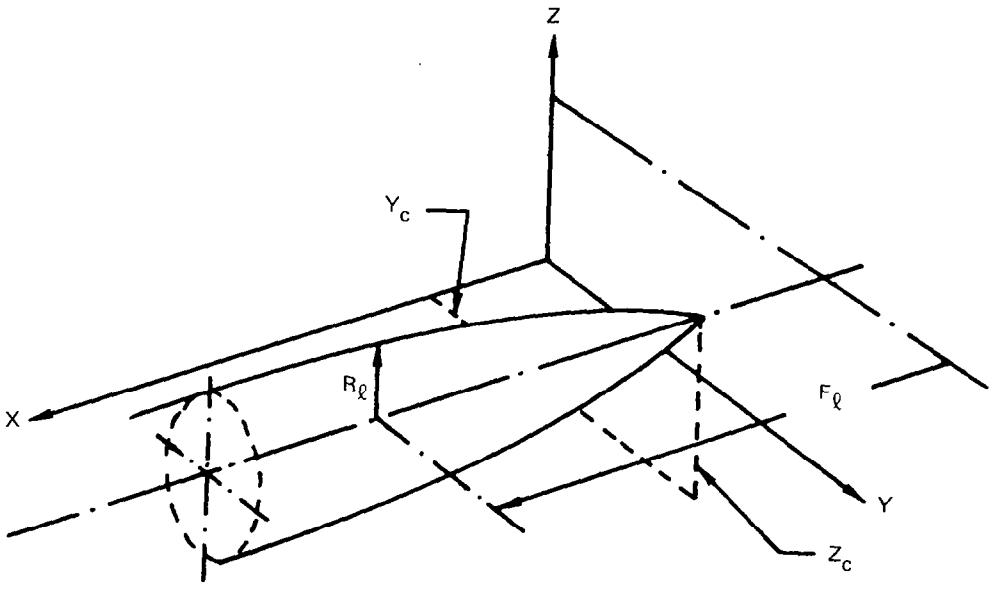

Figure 7.—Slender Body Geometric Nomenclature

Card Set 11.0–Panel Geometric Definition

COLS.	KEYWORD/ VARIABLE	FORMAT	DESCRIPTION
1-10	PANEL	A10	Introduces data for specific panel
11-15	IPN	I5	Panel number Panels are numbered consecutively as input; Applicable only to primary lifting surface panels.
16-20	IDSURF	I5	Logical file number of the SATAP file containing the modal data for the surface including this panel. For interference surface lifting panels IDSURF = 0.
21-25			Not used
26-30	ITYPE	A5	Indicates type of lifting surface PRIME - primary lifting surface INTER - interference lifting surface
31-40	XSHIFT	E10.0	Shift of surface along X axis
41-50	YSHIFT	E10.0	Shift of surface along Y axis
51-60	ZSHIFT	E10.0	Shift of surface along Z axis

Card 11.1–Panel Planform Definition

COLS.	KEYWORD/ VARIABLE	FORMAT	DESCRIPTION
1-10	X1	E10.0	X coordinate of panel inboard leading edge corner
11-20	X2	E10.0	X coordinate of panel inboard trailing edge corner
21-30	X3	E10.0	X coordinate of panel outboard leading edge corner
31-40	X4	E10.0	X coordinate of panel outboard trailing edge corner
41-50	Y1	E10.0	Y coordinate of panel inboard edge
51-60	Y2	E10.0	Y coordinate of panel outboard edge

Card 11.2–Panel Planform Definition (Cont.)

COLS.	KEYWORD/ VARIABLE	FORMAT	DESCRIPTION
1-10	Z1	E10.0	Z coordinate of panel inboard edge
11-20	Z2	E10.0	Z coordinate of panel outboard edge
21-25	NC	I5	Number of chordwise division boundaries
26-30	NS	I5	Number of spanwise division boundaries
31-40	COEFF	E10.0	Scale factor for panel deflection modes Default: COEFF = 1.0

Card 11.3–Array of Panel Chordwise Division Boundaries

COLS.	KEYWORD/ VARIABLE	FORMAT	DESCRIPTION
1-10	TH	E10.0	Chordwise division boundary
11-70		6E10.0	Repeat TH for all NC values using as many cards as necessary. Each card contains seven values.
Fractional values beginning with 0.0 at the panel leading edge, ending with 1.0 at panel trailing edge.			

Card 11.4–Array of Panel Spanwise Division Boundaries

COLS.	KEYWORD/ VARIABLE	FORMAT	DESCRIPTION
1-10	TAU(I)	E10.0	Spanwise division boundary
11-70		6E10.0	Repeat TAU for all NS values using as many cards as necessary. Each card contains seven values.
Fractional values beginning with 0.0 at the panel inboard edge, ending with 1.0 at the panel outboard edge.			

Omit cards 12.0 through 12.3 if no slender bodies are defined. Repeat all slender body data (cards 12.0 through 12.3) for each slender body. Slender bodies with Y doublets must appear first.

Card Set 12.0–Slender Body Geometric Definition

COLS.	KEYWORD/ VARIABLE	FORMAT	DESCRIPTION
1-10	BODY	A10	Introduces data for specific slender body
11-15	IBN	I5	Body number, ($1 \leq IBN \leq 20$)
16-20	IDSURF	I5	File number of the SATAP file containing the data for this slender body.
21-70			Available for comments.

Card 12.1–Body Axis and Motion Specification

COLS.	KEYWORD/ VARIABLE	FORMAT	DESCRIPTION
1-10	ZC	E10.0	Z coordinate of slender body axis
11-20	YC	E10.0	Y coordinate of slender body axis
21-30	COEFF	E10.0	Scale factor for slender body deflection modes Default: COEFF = 1.0
31-35	NF	I5	Number of slender body element endpoints, ($2 \leq NF \leq 20$)
36-40	NZ	I5	Flag to specify Z doublets (upwash) = 0 No Z doublets = 1 Z doublets
41-45	NY	I5	Flag to specify Y doublets (sidewash) = 0 No Y doublets = 1 Y doublets
46-50	MISB1	I5	Number of first box on the interference lifting surface associated with this slender body
51-55	MISB2	I5	Number of last box on the interference lifting surface associated with this slender body
If a body has both Z and Y motion (e.g., nacelle), it is represented with two bodies, one having Z doublets, one having Y doublets. A single interference lifting surface is associated with both bodies.			

Card 12.2–Array of Body Element Endpoints

COLS.	KEYWORD/ VARIABLE	FORMAT	DESCRIPTION
1-10	F	E10.0	X coordinates of slender body element endpoints.
11-70		6E10.0	Repeat F for all NF values using as many cards as necessary. Each card may contain seven values.
Ordered from nose to tail.			

Card 12.3–Array of Radii at Body Element Endpoints

COLS.	KEYWORD/ VARIABLE	FORMAT	DESCRIPTION
1-10	RAD	E10.0	Slender body radii at element endpoints. Slender body must be closed, i.e., RAD(1) = RAD(NF) = 0.0
11-70		6E10.0	Repeat RAD for all NF values using as many cards as necessary. Each card may contain seven values.

Modal data may be input in any one of three forms:

1. Coefficients used in polynomial definitions of modal displacements and slopes are input on cards. Equations will be written to define the variables. For panels (lifting surfaces) the deflections will be normal to the surface, while for bodies the deflections will be in the Z- (if any) and Y- (if any) directions. For the "NR"th panel or body, the deflections in the "NQ"th mode are calculated as follows:

$$(f)\,{}^{(NR)}_{NQ} = COEF^{(NR)} \sum_{N=0,1,\ldots} \sum_{M=0,1\ldots} \left(\frac{x}{s}\right)^N \left(\frac{\tau}{s}\right)^M ARQ_{(NR,NQ,N,M)} \qquad (15)$$

where τ is in a radial direction. The origin of the radius is either at the origin of coordinates, when N8 = 0, or at the inboard edge (for the panel) or the axis (for a body) if N8 is set to 1 (fig.8).

2. Modal deflections, slopes, etc. for each aerodynamic element are input directly on cards.

3. Arrays of modal coefficients are read from input file SATAP and routines within L216 implement an appropriate interpolation scheme to determine the required modal data at the aerdynamic element control points, defined by geometric data previously input. This option requires previous use of the interpolation program L215 (INTERP) defined in reference 5, in order to form the modal coefficient arrays contained on SATAP. The interpolation routines are defined in the reference.

Card Set 13.0–Modal Data Set

COLS.	KEYWORD/ VARIABLE	FORMAT	DESCRIPTION
1-10	MODES	A10	Introduces modal data input set
11-70			Available for comments

$$\tau = \sqrt{\left\{y - (N8)Y_1^{(NR)}\right\}^2 + \left\{z - (N8)Z_1^{(NR)}\right\}^2} \quad \text{for panels}$$

$$\tau = \sqrt{\left\{y - (N8)Y_c^{(NR)}\right\}^2 + \left\{z - (N8)Z_c^{(NR)}\right\}^2} \quad \text{for bodies}$$

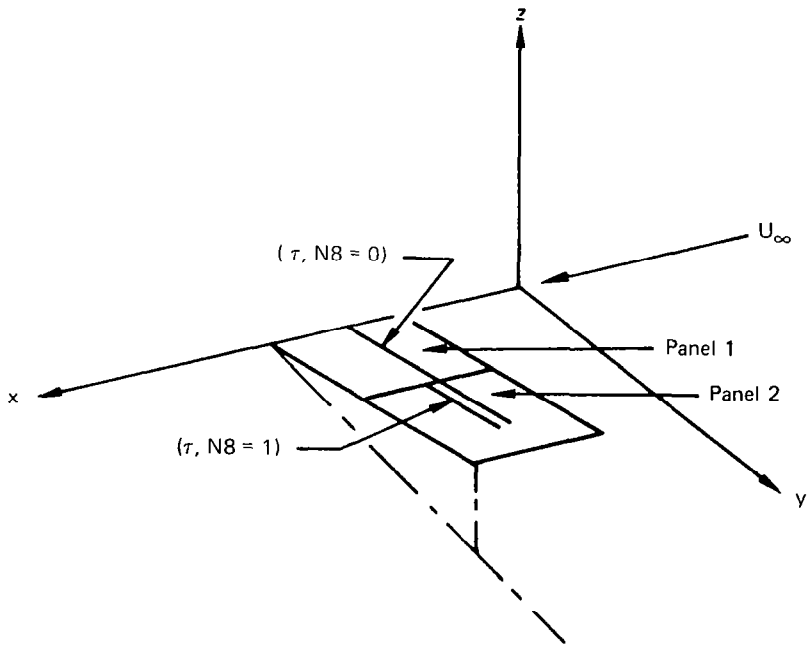

Since each panel is planar, τ is a spanwise distance in the plane measured from its inboard edge or from the origin $y = z = 0$; τ is a radial distance only in the sense that each panel may have a different dihedral. The use of this radial distance is not meant to imply that the panels are curved.

Figure 8. — Radial Origin Definition

Omit cards 13.1 through 13.4 if NAIC = 0 (card set 5.0).
Omit card 13.1 if NPC = 1 (card set 6.0).
Omit card 13.2 if NPC = 0.

Card Set 13.1–AIC Panel Mode Selection

COLS.	KEYWORD/ VARIABLE	FORMAT	DESCRIPTION
1-3	NOP	I3	Panel number
4	IS1	I1	= 1 Select plunging mode
5	IS2	I1	= 1 Select pitching mode
6	IS3	I1	= 1 Select control surface rotation
7	IS4	I1	= 1 Select tab rotation
8	IS5	I1	= 1 Select control surface plunging
9	IS6	I1	= 1 Select tab plunging
10			Not used
11-70			Repeat columns 1 to 10 for each panel; i.e. 7 panels per card. There are NP (card set 4) panels.

Card 13.2–AIC Panel Mode Selection (Alternative 2)

COLS.	KEYWORD/ VARIABLE	FORMAT	DESCRIPTION
1-3	NOP	I3	Panel number
4	IS1	I1	Select 1st cambering mode (=1)
5	IS2	I1	Select 2nd cambering mode (=1)
6	IS3	I1	Select 3rd cambering mode (=1)
7	IS4	I1	Select control surface rotation (=1)
8	IS5	I1	Select tab rotation (=1)
9	IS6	I1	Select control surface plunging (=1)
10	IS7	I1	Select tab plunging (=1)
11-70			Repeat columns 1 to 10 for each panel defined, (that is, 7 panels per card). There are NP (card set 4) panels.

Repeat cards 13.3 and 13.4 as pairs for all panels.

Card 13.3–Array of Reference Axis Locations at Panel Inboard Edge

COLS.	KEYWORD/ VARIABLE	FORMAT	DESCRIPTION
1-10	XHI(1)	E10.0	Elastic axis
11-20	XHI(2)	E10.0	Control surface leading edge
21-30	XHI(3)	E10.0	Control surface rotation point
31-40	XHI(4)	E10.0	Tab leading edge
41-50	XHI(5)	E10.0	Tab rotation point
Fraction values of local chord at the inboard panel edge			

Card 13.4–Array of Reference Axis Locations at Panel Outboard Edge

COLS.	KEYWORD/ VARIABLE	FORMAT	DESCRIPTION
1-10	XHO(1)	E10.0	Elastic axis
11-20	XHO(2)	E10.0	Control surface leading edge
21-30	XHO(3)	E10.0	Control surface rotation point
31-40	XHO(4)	E10.0	Tab leading edge
41-50	XHO(5)	E10.0	Tab rotation point
Fractional values of local chord at the outboard panel edge			

Omit cards 14.0 through 17.4 if NAIC = 1 (card set 5.0).

Card Set 14.0–Modal Data Flags and Options

COLS.	KEYWORD/ VARIABLE	FORMAT	DESCRIPTION
1-5	NMD	I5	Total number of modes ($1 \leq NMD \leq 70$)
6-10	NTA	I5	Total number of ARQ values for polynomial mode input Omit if NMDIN ≠ 0
11-15	IAERO	I5	Flag to save aerodynamic data on file NAETP = 0 Do not save = 1 Save $[D]^{-1}$ and [F] matrices (D^{-1} is the quasi-inverse) = 2 Save [Q] and $[\Delta C_p]$ matrices = 3 Save $[D]^{-1}$, [F], [Q], $[\Delta C_p]$ matrices
16-20	NMDIN	I5	Type of modal input* = 0 Polynomial = 1 Integration matrix [B], deflections [h/s], first derivative $[d(h/s)/d(x/s)]$ and second derivative $[d^2(h/s)/d(x/s)^2]$ from cards. = 2 Input SA arrays from file NTPSA
21-25	NPFM	I5	Flag to compute and print pressure coefficients, section coefficients, stability derivatives and generalized force coefficients = 0 Do not compute and print = 1 Compute and print If IAERO > 1 and NPRM = 0, the results are computed but not printed.
26-30	NMTP	I5	Number of ARQ coefficients for all lifting surface panels Omit if NMDIN ≠ 0
31-35	NMTB	I5	Number of ARQ coefficients for all slender bodies Omit if NMDIN = 0
36-45	NTPSA	A10	Name of file containing the SA arrays. File name must begin in column 36 with an alphabetic character and may contain up to seven characters. Omit if NMDIN ≠ 2

*h is defined positive in the positive z or y direction (fig. 1)

Omit cards 15.0 through 17.4 if NMDIN = 2 (card set 14.0).
Omit cards 15.0 through 15.2 if NMDIN = 1.
Omit cards sets 16 through 17.4 if NMDIN = 0.
Repeat cards 15.0 through 15.2; once for panel data, once for slender body data.

Card Set 15.0–Polynomial Mode Input Data Set

COLS.	KEYWORD/ VARIABLE	FORMAT	DESCRIPTION
1-10	PANEL or BODY	A10	Indicates polynomial modal data for specific panels, bodies
11-70			Available for comments
Polynomial modal data for panels must precede that for bodies.			

Card 15.1–Polynomial Mode Specifications

COLS.	KEYWORD/ VARIABLE	FORMAT	DESCRIPTION
1-2	NR	I2	Panel/body number
3-4	NQ	I2	Mode number
5-6	NA	I2	Number of ARQ coefficients for mode NQ for panel/body NR.
7-8	N8	I2	Radial origin flag = 0 Use X axis = 1 Use panel inboard edge/body axis
9-10			Not used
11-70		30I2	Repeat the four items in column 1-10 for all ((NP/NB)*NMD) values using as many cards as necessary. Each card may contain seven sets of four items.
Ordering is required to be {[Panels(1-NP)], Mode(1)} -- [Panels(1-NP)], Mode(NMD)} or equivalently for slender bodies. The set of numbers must be specified regardless of whether or not the panel/body is in motion.			

Card 15.2–Constant Coefficients for Definition of Polynomial Mode Shapes

Note sign convention shown in figure 1.

COLS.	KEYWORD/ VARIABLE	FORMAT	DESCRIPTION
1-5	LARQ(1)	I5	Exponent of X/S in the expression defining polynomial modes
6-10	LARQ(2)	I5	Exponent of Y/S
11-20	ARQ	E10.0	Coefficient in the expression defining polynomial modes
21-60			Repeat to $\sum$NA - three sets per card - number of cards as necessary

If NMDIN = 1, cards 15.0 through 15.2 are replaced by card sets 16.0 through 17.4.

Repeat cards 16.0 through 16.3 for each mode.

Card Set 16.0–Tabular Modal Data for Panels

COLS.	KEYWORD/ VARIABLE	FORMAT	DESCRIPTION
1-10	PANEL MODE	A10	Introduces tabular modal data set for lifting surface panels
11-15	INMD	I5	Mode number, (1 $\leq$ INMD $\leq$ NMD)
16-20	NBOX	I5	Total number of boxes on all panels
21-25	IFLAG	I5	Flag describing form of input for generalized force integration matrix = 0 Integration matrix [BQ] input on cards = 1 [BQ] calculated internally from normalized box c/4 displacements input on cards

Card 16.1–Box Integration Matrix

COLS.	KEYWORD/ VARIABLE	FORMAT	DESCRIPTION
1-10	BQ	E10.0	Generalized force integration matrix data
11-70		6E10.0	Repeat BQ for all NBOX values, using as many cards as necessary. Each card contains seven values.

Form of the data is dependent on IFLAG (card set 16.0)

IFLAG = 0 Input matrix [BQ] with elements defined by

$$BQ_{ki} = \frac{1}{s^2} \lambda_k \left(\frac{hc/4}{s}\right)_{ki}$$

IFLAG = 1 Input matrix $\left[\frac{hc/4}{s}\right]$, c/4 displacements

Card 16.2–Box Displacements

Note sign convention shown in figure 1.

COLS.	KEYWORD/ VARIABLE	FORMAT	DESCRIPTION
1-10	H	E10.0	Normalized box 3c/4 displacements $\left[\frac{h3c/4}{s}\right]$
11-70		6E10.0	Repeat H for all NBOX values using as many cards as necessary. Each card contains seven values.
Values for boxes on interference lifting surfaces may be input as zero, since interference surfaces carry no lift due to their own motion.			

Card 16.3–Derivatives of Box Displacements

COLS.	KEYWORD/ VARIABLE	FORMAT	DESCRIPTION
1-10	DH	E10.0	Derivative of normalized box 3c/4 displacement $d(h3c/4/s)/d(x/s)$
11-70		6E10.0	Repeat DH for all NBOX values using as many cards as necessary. Each card contains seven values.
Values for boxes on interference surfaces may be input as zero.			

Card Set 17.0–Tabular Modal Data for Bodies

COLS.	KEYWORD/ VARIABLE	FORMAT	DESCRIPTION
1-10	BODY MODE	A10	Introduces tabular modal data set for slender bodies
11-15	INMD	I5	Mode number, ($1 \leq$ INMD $\leq$ NMD)
16-20	NBE	I5	Total number of line elements on all slender bodies

Card 17.1–Body Element Integration Matrix

COLS.	KEYWORD/ VARIABLE	FORMAT	DESCRIPTION
1-10	BQ	E10.0	Generalized force integration matrix data
11-70		6E10.0	Repeat BQ for all NBE values using as many cards as necessary. Each card contains seven values.

Form of data is dependent on IFLAG (card set 16.0)

IFLAG = 0 Input matrix [BQ] with elements defined by

$$BQ_{\ell i} = \frac{1}{s^2}\left[R_{\ell}\,\Delta x_{\ell}\left(\frac{h\,\Delta x/2}{s}\right)_{\ell i}\right]$$

IFLAG = 1 Input matrix $\left[\frac{h\,\Delta x/2}{s}\right]$

Card 17.2–Line Element Displacement

Note sign convention shown in figure 1.

COLS.	KEYWORD/ VARIABLE	FORMAT	DESCRIPTION
1-10	H	E10.0	Normalized line element midchord displacement $\left[\frac{h\Delta x/2}{s}\right]$
11-70		6E10.0	Repeat H for all NBE values using as many cards as necessary. Each contains seven values.

Card 17.3–First Derivative of Line Element Displacement

COLS.	KEYWORD/ VARIABLE	FORMAT	DESCRIPTION
1-10	DH1	E10.0	Derivative of normalized line element midchord displacement $d\left(\frac{h\Delta x/2}{s}\right) / d\left(\frac{x}{s}\right)$
11-70		6E10.0	Repeat DH1 for all NBE values using as many cards as necessary. Each contains seven values.

Card 17.4–Second Derivative of Line Element Displacement

COLS.	KEYWORD/ VARIABLE	FORMAT	DESCRIPTION
1-10	DH2	E10.0	Second derivative of normalized line element midchord displacement $d^2\left(\frac{h\Delta x/2}{s}\right) / d\left(\frac{x}{s}\right)^2$
11-70		6E10.0	Repeat DH2 for all NBE values using as many cards as necessary. Each contains seven values.

Card Set 18.0–L216 Data Set Termination

COLS.	KEYWORD/ VARIABLE	FORMAT	DESCRIPTION
1-20	$QUIT DUBLAT DATASET	A10,10X	Terminates L216 card input data.

6.3.3 SUMMARY OF CARD INPUT DATA

Requirements or Function	Key Words and/or Variables	Card Format	Reference Card Set (CS)
	$DUBL	A10	1.0
	$TITL	A10	2.0
	CASE CHECK ICASE ICOND	A10,I5, A10,I5	3.0
Condition, Configuration Specs.	FMACH ACAP REFCND REFSPN NDELT NB NP NRF	4E10.0,4I5	4.0
Options	NDSV NDATA NDBG NAETP NGETP NAIC NSB -----	5I5,5X,2A10	5.0
AIC Specs., Options	NSTRIP NBL NPR2 ----- JSPECS NSV NYAW NBF NPR1 NPR3 NGUST NPC NBV -----	6I5,5X,6I5	6.0
Gust; NGUST=1	GUST GZRO XZRO VEL WG	A10,4E10.0	7.0
Strip-Box Correlation	LIM(I,1) , Repeat to I = NSTRIP LIM(I,2)	14I5	8.0
	REDUC	A10	9.0
k values	RFREQ , Repeat to NRF	7E10.0	9.1
	GEOME	A10	10.0
Panel Specs. NP ≠ 0	PANEL IPN ----- XSHIFT YSHIFT ZSHIFT IDSURF ITYPE	A10,2I5,5X, A5,3E10.0	11.0
Panel Planform Definition	X1 X2 X3 X4 Y1 Y2	6E10.0	11.1
	Z1 Z2 NC COEFF NS	2E10.0,2I5 E10.0	11.2
Chordwise Divisions	TH , Repeat to NC	7E10.0	11.3
Spanwise Divisions	TAU , Repeat to NS	7E10.0	11.4

Repeat to NP

Requirements or Function		Key Words and/or Variables		Card Format	Reference Card Set (CS)
Slender Body Specs. NB ≠ 0		BODY IBN IDSURF	Repeat to NB	A10,2I5	12.0
Body axis, motion Specs.		ZC YC COEFF NF NY MISB2 NZ MISB1	Repeat to NB	3E10.0,5I5	12.1
Body Element Endpoints		F , Repeat to NF	Repeat to NB	7E10.0	12.2
Body Radii at Endpoints		RAD , Repeat to NF	Repeat to NB	7E10.0	12.3
		MODES		A10	13.0
NAIC = 1	AIC Specs. I NPC = 0	[NOP,IS1,IS2,IS3,IS4,IS5,IS6], Repeat to NP		7(I3,6I1)	13.1
NAIC = 1	AIC Specs. II NPC = 1	[NOP,IS1,IS2,IS3,IS4,IS5,IS6,IS7], Repeat to NP		7(I3,7I1)	13.2
NAIC = 1	Ref. Axis,Inbd.	XHI1 XHI2 XHI3 XHI4 XHI5	Repeat to NP	5E10.0	13.3
NAIC = 1	Ref. Axis,Outbd.	XHO1 XHO2 XHO3 XHO4 XHO5	Repeat to NP	5E10.0	13.4
Modal Data Specs. and Options		NMD IAERO NPFM NMTB NTA NMDIN NMTP NTPSA		7I5,A10	14.0
NMDIN = 0		PANEL/BODY	Repeat for Bodies	A10	15.0
NMDIN = 0	Poly. Mode Specs.	[NR,NQ,NA,NB,-], Repeat to NP/NB	Repeat for Bodies	4I2,2X,30I2	15.1
NMDIN = 0	Coefficients	LARQ1 ARQ , Repeat to NA LARQ2	Repeat for Bodies	2I5,E10.0	15.2
NMDIN = 1	Box Tabular Modal Specs. & Options	PANEL INMD NFLG NBOX	Repeat to NMD	A10,3I5	16.0
NMDIN = 1	Box Integ. Matrix	BQ , Repeat to NBOX	Repeat to NMD	7E10.0	16.1
NMDIN = 1	Box H3c/4/s	H , Repeat to NBOX	Repeat to NMD	7E10.0	16.2
NMDIN = 1	Box dH3c/4/s/dx/s	DH , Repeat to NBOX	Repeat to NMD	7E10.0	16.3
NMDIN = 1	Body Tabular Modal Specs.	BODY INMD NBE	Repeat to NMD	A10,2I5	17.0
NMDIN = 1	Line Integ. Matrix	BQ , Repeat to NBE	Repeat to NMD	7E10.0	17.1
NMDIN = 1	Line Hc/2/s	H , Repeat to NBE	Repeat to NMD	7E10.0	17.2
NMDIN = 1	Line dHc/2/s/dx/s	DH1 , Repeat to NBE	Repeat to NMD	7E10.0	17.3
NMDIN = 1	Line $d^2Hc/2/s/dx/s^2$	DH2 , Repeat to NBE	Repeat to NMD	7E10.0	17.4
		$QUIT		A10	18.0

6.3.4 MAGNETIC FILES INPUT DATA

Program L216 utilizes one magnetic file (disk or tape) for modal data input. Interpolation arrays composed of modal deflections and slopes are input on file SATAP. This file must have been created after previous execution of the program described in reference 5. Order and format of the matrices on file SATAP are shown in figure 9.

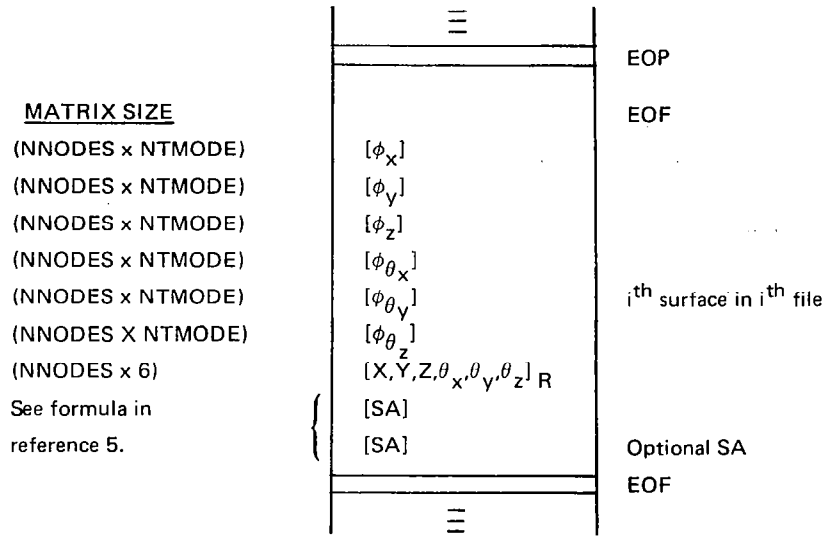

Note:

$\theta_x, \theta_y, \theta_z$ are in degrees

NNODES = number of nodes

NTMODE = number of modes

Figure 9.—Map of Magnetic File SATAP

6.4 OUTPUT DATA

Output data from program L216 consists of printed results, and geometric and aerodynamic data saved on magnetic files NGETP and NAETP at the user's request. Saved files are used subsequently in DYLOFLEX.

6.4.1 PRINTED OUTPUT DATA

The specific data and the extent of printed output are dependent on user specified options. The major blocks of printed output are described below.

1. Echo print of input options, flags, title, file names, etc

2. Geometric data input for lifting surfaces

3. Geometric data input for slender bodies

4. Modal data

   - Normalwash due to primary lifting surface motion
   - Normalwash induced by slender bodies
   - Augmented normalwash

5. Aerodynamic characteristics/per mode

   - Pressure difference coefficients
   - Section normal force and moment coefficients
   - Slender body forces
   - Stability derivatives
   - Generalized airforce coefficients

6. Intermediate geometric and aerodynamic data (optional)

6.4.2 MAGNETIC FILES OUTPUT DATA

Selected geometric and aerodynamic data can be saved at the user's request on files "NGETP" and "NAETP", respectively, for subsequent use in DYLOFLEX. Except for the quasi-inverse matrix (D^{-1}), the files are writen in READTP/WRTETP format[1]; an end-of-file terminates the matrices stored for a case. The quasi-inverse matrix is written with binary READ/WRITE format in multiple records terminated by a one word record containing (10HQUASI-END.).

---

[1]Clemmons, R.E.: *Programming Specifications for Modules of the Dynamic Loads System to Interface with FLEXSTAB*. NASA contract NAS 1-13918, BCS-G0701, September 1975. (internal document)

Saved Geometry Tape NGETP

The format of all geometric data matrices on file NGETP is described in figure 10. Contents of the first matrices on file are shown in figures 11 through 15. The interference surface-slender body correlation matrix is described in figure 16.

SIZE	MATRIX NO.		DESCRIPTION
15	1	MPC	Geometry control matrix (See Figure 11)
8*NTB	2	BODTAB	Body table matrix (See Figure 12)
N1	3	MPSG	Primary lifting surface geometry matrix (See Figure 13)
N2	4	MISG	Interference lifting surface geometry matrix (See Figure 14)
N3	5	MSBG	Slender body geometry matrix (See Figure 15)
NBOX each	6,7,8	EV PV ZV	Arrays of X,Y, and Z coordinates of the 1/4 chord points of all boxes
NBOX each	9,10,11	X Y ZZ	Arrays of X,Y, and Z coordinates of the 3/4 chord points of all boxes
NTOT	12	MBA	Aerodynamic element area
NTOT	13	MDA	Dihedral angles of aerodynamic elements
NTOT	14	MSBC	Interference surface box-slender body line element correlation (See Figure 16)
NBE	15	SDELX	Body element lengths
NBE	16	X	Body element midpoint X location
NBE	17	RO	Body element midpoint radius
NBE	18	ROP	Slope of midpoint radius
		EOF	

Figure 10.—Geometry Definition Tape "NGETP"

SIZE = 15

NO.	ITEM	DESCRIPTION
1	ICASE	Case Number
2	ICOND	Condition Number
3	IGEOM	Geometric data successfully saved (=1)
4	REFCHD	Reference chord
5	REFSPN	Reference semispan
6	ACAP	Reference Area
7	FMACH	Mach Number
8	NTBB	Number of boxes on thin bodies (primary lifting surfaces)
9	NIBB	Number of boxes on interference surfaces
10	NBE	Number of slender body elements
11	NTB	Number of panels on thin bodies (primary lifting surfaces)
12	NB	Number of slender bodies
13	NPLS	Number of thin bodies (primary lifting surfaces)
14	NPIS	Number of interference lifting surfaces
15		Not Used

Figure 11.—Geometry Control Matrix [MPC]

SIZE = 8*NTB

The matrix contains one column for each body I. Elements in a column are specified below.

ELEMENT		DESCRIPTION
(1,I)	ITYPE	= 1, Slender Body
		= 3, Thin Body
(2,I)	IPOS	= 0, Off plane of symmetry
		= 1, on plane of symmetry
(3,I)	X_0	Origin of local axis system
(4,I)	Y_0	for this body (Reference
(5,I)	Z_0	axis coordinate)
(6,I)	γ_0	Dihedral angle for this body
(7,I)	IFIRST	Pointers to this body's first and
(8,I)	LAST	last boxes/segments in the total array
		of structural boxes/segments

NOTE: A thin body corresponds to a lifting surface panel.

Figure 12.—Body Table Matrix [BODTAB]

$$\text{Size} = [4 + 5*\text{NLIFS} + \sum_{I=1}^{\text{NLIFS}} (\text{NSUBL}(2,I)*9)]$$

No.	Item	Description
1	ICASE	Case number
2	ICOND	Condition number
3	NLIFS	Number of primary lifting surfaces
4	NBXL	Number of boxes on all primary lifting surfaces
5	NSUBL(1,1)	File number of SA array for first surface
6	NSUBL(2,1)	Number of panels on first surface
7	NSUBL(3,1)	First box number on first surface
8	NSUBL(4,1)	Last box number on first surface
9	NSUBL(5,1)	Flat = 1 if surface on Y = 0 plane
10	IPN	Panel number
11	X1	Panel coordinates (see fig. 5)
12	X2	
13	X3	
14	X4	
15	Y1	
16	Y2	
17	Z1	
18	Z2	
		Elements from 10 through 18 are repeated for each of the NSUBL(2,1) panels
		Elements 5 through (9*NSUBL(2,1) + 9) are repeated for all NLIFS surfaces

Figure 13.—Primary Lifting Surface Geometry Matrix [MPSG]

$$\text{Size} = [4 + 5*\text{NINTS} + \sum_{I=1}^{\text{NINTS}} (\text{NSUBL}(2,I)*9)]$$

No.	Item	Description
1	ICASE	Case number
2	ICOND	Condition number
3	NINTS	Number of interference lifting surfaces
4	NBXL	Number of boxes on all interference lifting surfaces
5	NSUBL (1,1)	File number of SA array for first surface
6	NSUBL (2,1)	Number of panels on first surface
7	NSUBL (3,1)	First box number on first surface
8	NSUBL (4,1)	Last box number on first surface
9	NSUBL (5,1)	Flag = 1 if surface is on Y = 0 plane
10	IPN	Panel number
11	X1	Panel coordinates (see fig. 5)
12	X2	
13	X3	
14	X4	
15	Y1	
16	Y2	
17	Z1	
18	Z2	
		Elements 10 through 18 are repeated for each of the NSUBL (2,1) panels
		Elements 5 through (9 + 9*NSUBL (2,1)) are repeated for all NINTS surfaces

Figure 14.—Interference Lifting Surface Geometry Matrix [MISG]

Saved Aerodynamics Tape NAETP

Contents of the aerodynamic data file NAETP are dependent on the user specification of IAERO (card set 14.0). The number of matrices written on NAETP in each instance is shown in table 3. The formats of these matrices for the cases when IAERO = 1 or IAERO = 2 are the shown in figures 17 through 19. If IAERO = 3, the result is equivalent to requesting both IAERO = 1 and IAERO = 2.

Table 3.—Number of Matrices Stored on NAETP

IAERO	Number of matrices
0	None
1	(2*NBOX + N + 4) NRF
2	(NMD + 2) NRF
3	(2NBOX + N + NMD + 6) NRF

Note: For IAERO = 3, the matrices for IAERO = 1 are followed by the matrices for IAERO = 2 for each reduced frequency. The matrix sizes and contents are described in figures 16 through 18.

6.5 RESTRICTIONS

Restrictions on the theoretical development and on idealization of configurations have been previously discussed in section 4.2. Restrictions on program variable sizes have been defined in section 6.3. The aerodynamic influence coefficient formulation (AIC) is obtained for strips on lifting surfaces only–slender body elements have been ignored. The AIC option in this program does not produce results that are suitable for subsequent use in DYLOFLEX.

6.6 DIAGNOSTICS

Errors detected by L216 generate diagnositc messages. Fatal errors cause the current case to be terminated and a new case to be initiated. Thirty-three fatal error messages exist in the program coding. The first line of a fatal error reads:

***** FATAL ERROR **

and the last line is:

CURRENT CASE WILL BE TERMINATED

IAERO = 1

NO.	SIZE		DESCRIPTION
1	(14+NKVAL)	MAC	Aerodynamic Control Matrix See Figure 19
2	(2*NBE)	$[F]_1$	1st row of the induced downwash factors matrix
		⋮	
(NBOX+1)	(2*NBE)	$[F]_{NBOX}$	Last row of the induced downwash factors matrix
(NBOX+2)	VARIABLE	$[D]^{-1}_{L,1}$	1st record of the L matrix portion of the quasi-inverse matrix
		⋮	
(NBOX+2+N)	VARIABLE	$[D]^{-1}_{L,N}$	Last record of the L matrix portion of the quasi-inverse matrix
(NBOX+3+N)	(2*NBOX+1)	$[D]^{-1}_{T,1}$	1st record of the trapezoidal section of the quasi-inverse matrix
		⋮	
(2*NBOX+3+N)	3	$[D]^{-1}_{T,NBOX}$	Last record of the trapezoidal section of the quasi-inverse matrix
(2*NBOX+4+N)	1	DEND	Record to terminate the quasi-inverse matrix. DEND = (10HQUASI-END.)
			Matrices 2 through (2*NBOX+N+4) are repeated for all NKVAL reduced frequencies
			EOF

Figure 17.—Aerodynamics Results Matrix (IAERO=1)

IAERO = 2

NO.	SIZE		DESCRIPTION
1	(14+NKVAL)	MAC	Aerodynamic data control matrix (see Fig. 19)
2	2*(NBOX+NBE)	$\{\Delta C_p\}_1$	Column of pressure coefficients for the first mode
		⋮	
NMD+1	2*(NBOX+NBE)	$\{\Delta C_p\}_{NMD}$	Column of pressure coefficients for the NMD mode
NMD+2	2*NMD*NMD	[Q]	Generalized airforces [Q]
			Matrices 1 through (NMD+2) are repeated for all NKVAL reduced frequencies
			EOF

Figure 18.—Aerodynamic Results Matrix (IAERO=2)

SIZE = 14 + Number of reduced frequencies

NO.	ITEM	DESCRIPTION
1	ICASE	Case Number
2	ICOND	Condition number
3	IAERO	Flag for saving aerodynamic data
4	FMACH	Mach number
5	NKVAL	Number of reduced frequencies
6	NBOX	Number of lifting surface boxes
7	NBE	Number of slender body elements
8	NMD	Number of aerodynamic modes
9	REFCHD	Reference chord
10	REFSPN	Reference semi-span
11	ACAP	Reference area
12	BR	Reference length
13		Not used
14		Not used
15	RFREQ(1)	1st reduced frequency
•	•	•
•	•	•
•	•	•
14+NKVAL	RFREQ(NKVAL)	Last reduced Frequency

Figure 19.—Aerodynamic Results Control Matrix

6.6.1 L216 ERROR CODES

Code	Example message
1	PREMATURE END-OF-FILE FOUND ON FILE nnn EXECUTION TERMINATED
2	UNRECOGNIZED KEYWORD aaaaa IMPROPER INITIALIZATION OR TERMINATION Valid 5-character keywords are $DUBL, CASE and $QUIT. See card input description (sec. 6.3) for proper intialization or termination of data sets.
3	TOO MANY CASES DEFINED MAX ALLOWED IS 36 EXECUTION TERMINATED
4	FATAL ERROR FOUND IN OVERLAY nnn EXECUTION TERMINATED FOR CASE nn FIND NEXT CASE
5	INVALID NUMBER OF REDUCED FREQUENCIES nnnnnn
6	INVALID REFERENCE CHORD nnnnnnnnnnnnnn
7	INVALID REFERENCE SEMISPAN nnnnnnnnnnnn
8	INVALID REFERENCE AREA nnnnnnnnnnnn
9	NO. PANEL OR BODY DEFINED - CHECK DATA
10	NO. OF PANELS nnnn EXCEEDS MAXIMUM (40) ALLOWED
11	NO. OF BODIES nnnn EXCEEDS MAXIMUM (20) ALLOWED
12	NO. OF STRIPS nnnn EXCEEDS MAXIMUM (70) ALLOWED
13	INVALID SYMMETRY OPTION NDELT = nnnnnn
14	INVALID MACH NUMBER (MIN = 0.0, MAX = 0.9999)
15	INVALID YAW MOTION FLAG NYAW = nnn
16	KEYWORD MISSING FOR MODAL INPUT DATA
17	INVALID X-COORDINATES FOR PANEL nnnnn
18	SPANWIDE OR CHORDWISE BOUNDARIES EXCEED MAXIMUM (30) ALLOWED

19 NUMBER OF BOXES DEFINED EXCEEDS 400

20 NUMBER OF BODY DIVISIONS EXCEEDS MAX (20) ALLOWED

21 INVALID BODY ENDPOINTS FOR BODY nnnnn

22 INVALID CAMBER MODE AXIS DEFINED FOR AIC MODE nnnnn FOR STRIP nnnnn

23 WRONG NUMBER OF BOXES SPECIFIED nnnnn
PROGRAM FOUND nnnnn

24 WRONG NUMBER OF BODY ELEMENTS nnnnn
PROGRAM FOUND nnnnn

25 FETAD ERROR CODE = nnnnn FOUND WHILE DEFINING SA ARRAY TAPE nnnnnnn ERROR CODE INTERPRETATION

= 1 ILLEGAL TAPE NAME OR NUMBER

= 2 BUFFER TOO SMALL

= 3 TOO MANY FILES (MAX 49)

26 FETAD ERROF CODE = nnnnn FOUND WHILE DEFINING NTPQ TAPE aaaaaa

27 READTP ERROR IRR = nnnnn WHILE READING 1ST MATRIX OF SA ARRAY

28 NUMBER OF MODES REQUESTED nnnnn
NUMBER OF MODES IN SA ARRAY nnnnn

29 ERROR FOUND IN COMPUTING MODAL DATA FROM SA ARRAY AINTG ERROR CODE WORD IS *

*ABCDEFGXX	MEANS ERROR NO. XX IN ROUTINE ABCDEFG
*AINTG 1	MEANS INTERPOLATION COEFFICIENT ARRAY TYPE UNRECOGNIZABLE

30 WRTETP ERROR ENCOUNTERED IN WRITING THE nnnTH MATRIX ON FILE aaaaaaa.

ERROR CODE IRR = nnnnn

31 PANELS ON SURFACE nnn WERE NOT INPUT CONSECUTIVELY

32	FLAG WAS SET TO SAVE AERODYNAMIC RESULTS INVALID TAPE NUMBER (NAETP) = aaaaaa WAS GIVEN
33	INVALID FILE NAME

6.6.2 READTP ERROR CODES

Code	Description
0	No errors are detected during reading.
1000 + I	An FSF error occurred, where I is the number of file marks remaining to be skipped when an end-of-information was encountered.
2	The number of matrices or files to be skipped before reading starts is less than zero.
3	The dimensioned number of rows in the matrix is less than zero.
3000 + I	An FSR error occurred, where I is the number of records remaining to be skipped when either an end-of-file or end-of-information was encountered.
4	Number of rows in the matrix is greater than the dimensioned row size in the program.
5	The name check failed.
6	The number of rows in the matrix (M) times the number of columns (N) is greater than the buffer size, or $M * N \leq 0$.
7	An end-of-file was read. If it occurs while reading the matrix ID, no information is stored in the user's area. If it occurs while reading the matrix, the ID information will be stored. Note that the records will always be in pairs, and an end-of-file should always be encountered with the ID record.

6.6.3 WRTETP ERROR CODES

Code	Description
0	No errors are detected during writing
1000 + I	An FSF error occured, where I is the number of file marks remaining to be skipped when an end-or-information was encountered.
2	The number of matrices or files to be skipped, before writing starts, is less than zero.

3	The dimensioned number of rows in the matrix is less than or equal to zero.
3000 + I	The actual number of rows is greater than the dimensioned number of rows in the matrix.
6	The number of rows in the matrix (M) times the number of columns (N) is greater than the buffer size.

7.0 SAMPLE PROBLEM

The configuration chosen for the example problem is illustrated in figure 20; included are a wing, strut, nacelle, and fuselage. There are three modes of motion: plunge, pitch, and roll. The wing is represented by two panels, one having nonzero dihedral. The nacelle is idealized as two slender bodies to accomodate both Z and Y motions. Each half of the interference shells is represented with three panels. The polynomial modal input option is utilized. The idealization is entirely demonstrational and is not to be regarded as an optimum one.

7.1 INPUT DATA

7.1.1 PARAMETERS AND GEOMETRY

k	=	0, 0.5	A	=	6.4
M	=	0.85	c_r	=	1.5
δ	=	1.0	s	=	1.0
ϵ	=	0			

Nacelle, Slender Body 1

$Y_c = 2.0, \quad Z_c = -0.5,$	Y doublets
Element endpoints	2.0, 2.5, 3.25, 4.5
Radii at endpoints	0.0, 0.5, 0.5, 0.0

Nacelle, Slender Body 2

$Y_c = 2.0, \quad Z_c = 0.5,$	Z doublets
Element endpoints	2.0, 2.5, 3.25, 4.5
Radii at endpoints	0.0, 0.5, 0.5, 0.0

Fuselage, Slender Body 3

$Y_c = 0.0, \quad Z_c = 0.0,$	Z doublets
Element endpoints	0.0, 2.0, 4.0, 6.0
Radii at endpoints	0.0, 1.0, 1.0, 0.0

The panel geometry is summarized in table 4.

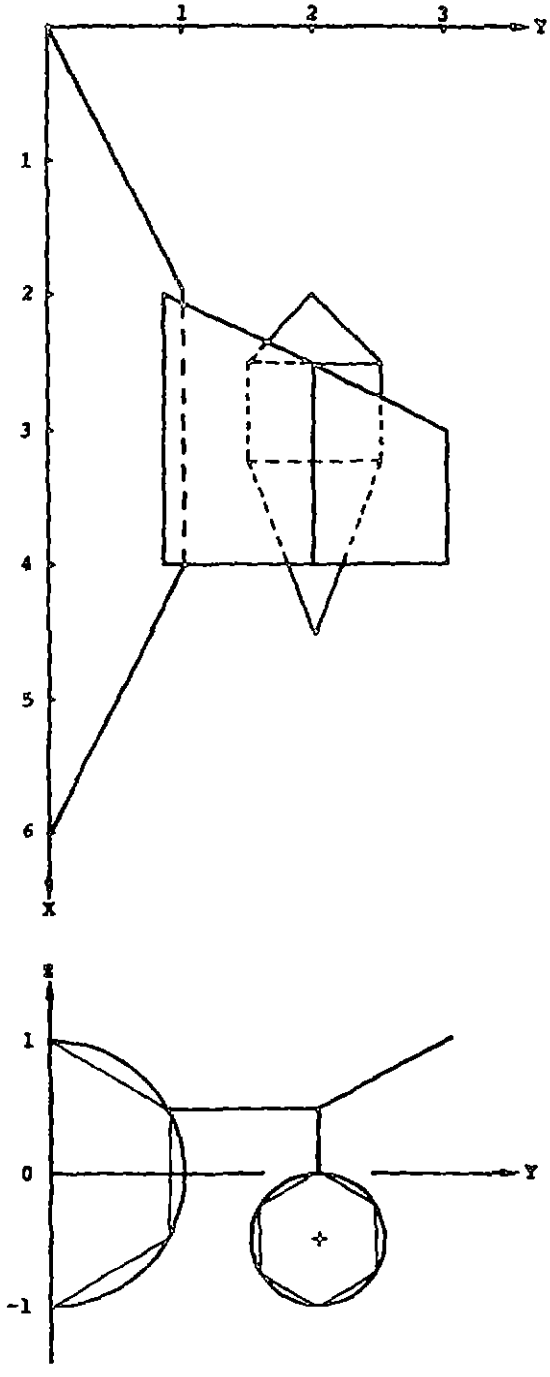

Figure 20.—Configuration for Example Problem

Table 4.–Sample Problem Panel Geometry

Panel		X_1	X_2	X_3	X_4	Y_1	Y_2	Z_1	Z_2	Chordwise	Spanwise
Wing	1	2.0	4.0	2.5	4.0	0.866	2.0	0.5	0.5	0.0,0.5,1.0	0.0,0.5,1.0
	2	2.5	4.0	3.0	4.0	2.0	3.0	0.5	1.0	0.0,0.5,1.0	0.0,0.5,1.0
Strut	3	2.5	4.0	2.5	4.0	2.0	2.0	0.5	0.0	0.0,0.5,1.0	0.0,1.0
	4	2.5	4.0	2.5	4.0	2.0	2.443	0.0	-0.25	0.0,0.5,1.0	0.0,1.0
Nacelle	5	2.5	4.0	2.5	4.0	2.433	2.433	-0.25	-0.75	0.0,0.5,1.0	0.0,1.0
interference	6	2.5	4.0	2.5	4.0	2.433	2.0	-0.75	-1.0	0.0,0.5,1.0	0.0,1.0
surface	7	2.5	4.0	2.5	4.0	2.0	1.567	-1.0	-0.75	0.0,0.5,1.0	0.0,1.0
	8	2.5	4.0	2.5	4.0	1.567	1.567	-0.75	-0.25	0.0,0.5,1.0	0.0,1.0
	9	2.5	4.0	2.5	4.0	1.567	2.0	-0.25	0.0	0.0,0.5,1.0	0.0,1.0
Fuselage	10	2.0	4.0	2.0	4.0	0.0	0.866	1.0	0.5	0.0,0.5,1.0	0.0,0.5,1.0
interference	11	2.0	4.0	2.0	4.0	0.866	0.866	0.5	-0.5	0.0,0.5,1.0	0.0,0.5,1.0
surface	12	2.0	4.0	2.0	4.0	0.866	0.0	-0.5	-1.0	0.0,0.5,1.0	0.0,0.5,1.0

7.1.2 MODAL DATA

Plunge, Mode 1

Panels[1]	$ARQ_{NR,1,0,0}$	$= {}^{2}\cos\gamma_{NR}$
Bodies	$ARQ_{1,1,N,M}$	$= 0.0$
	$ARQ_{2,1,0,0}$	$= ARQ_{3,1,0,0} = 1.0$

Pitch, Mode 2 (About x = 0)

Panels[1]	$ARQ_{NR,2,1,0}$	$= \cos\gamma_{NR}$
Bodies	$ARQ_{1,2,N,M}$	$= 0.0$
	$ARQ_{2,2,1,0}$	$= ARQ_{3,2,1,0,} = 1.0$

Roll, Mode 3

Panels[3]	$ARQ_{NR,3,0,0}$	$= Y_{1_{NR}} \cos\gamma_{NR} + Z_{1_{NR}} \sin\gamma_{NR}$
	$ARQ_{NR,3,0,1}$	$= 1.0$, N8 = 1
Bodies	$ARQ_{1,3,0,0}$	$= 0.5$
	$ARQ_{2,3,0,0}$	$= 2.0$
	$ARQ_{3,3,N,M}$	$= 0.0$

[1]Except NR = 3, 5, 8, 11

[2]$\gamma = \tan^{-1}\frac{Z_2 - Z_1}{Y_2 - Y_1}$

[3]NR = 1 to 9

Boeing Commercial Airplane Company
P.O. Box 3707
Seattle, Washington 98124
May 1977

```
$DUBLAT
$TITLE    PROGRAM L216 SAMPLE PROBLEM   WING, STRUT, NACELLE, FUSELAGE
$TITLE
$TITLE    TWELVE PANELS (2-WING,1-STRUT,6-NACELLE INTERFERENCE,
$TITLE    3-FUSELAGE INTERFERENCE)
$TITLE
$TITLE    THREE SLENDER BODIES (Y-NACELLE,Z-NACELLE,FUSELAGE)
$TITLE
$TITLE    SEVENTEEN STRIPS (4-WING,1-STRUT,6-NACELLE INTERFERENCE,
$TITLE    6-FUSELAGE INTERFERENCE)
$TITLE
$TITLE    THIRTY FOUR BOXES (8-WING,2-STRUT,12-NACELLE INTERFERENCE,
$TITLE    12-FUSELAGE INTERFERENCE)
$TITLE
$TITLE    NINE LINE ELEMENTS (3-EACH SLENDER BODY)
$TITLE
$TITLE    THREE DOF (PLUNGE,PITCH,ROLL)
$TITLE
$TITLE    PITCH REF X=0, ROLL REF Y = 0, Z = 0
$TITLE
$TITLE    POLYNOMIAL MODE INPUT
$TITLE
CASE          1                   1
 0.850     6.400      1.50      1.00        1   12    3    2                  4.0
    1    0    0    0    2    SAVAER    SAVGEO                                  5.0
   17              0    0    0         0    0         0    0    0              6.0
    1    2    3    4    5    6    7    8    9   10   11   12   13   14         8.0
   15   16   17   18   19   20   21   22   23   24   25   26   27   28         8.0
   29   30   31   32   33   34                                                  8.0
REDUCED REQUENCIES                                                             9.0
 0.00      0.50                                                                9.1
GEOMETRY                                                                      10.0
PANEL         1          PRIME                                                11.0
 2.00      4.00      2.50      4.00      0.866     2.00                        11.1
 0.50      0.50        3    3      1.00                                       11.2
 0.00      0.50      1.00                                                      11.3
 0.00      0.50      1.00                                                      11.4
PANEL         2          PRIME                                                11.0
 2.50      4.00      3.00      4.00      2.00      3.00                        11.1
 0.50      1.00        3    3      1.00                                       11.2
 0.00      0.50      1.00                                                      11.3
 0.00      0.50      1.00                                                      11.4
PANEL         3          PRIME                                                11.0
 2.50      4.00      2.50      4.00      2.00      2.00                        11.1
 0.50      0.00        3    2      1.00                                       11.2
 0.00      0.50      1.00                                                      11.3
 0.00      1.00                                                                11.4
PANEL                    INTER                                                11.0
 2.50      4.00      2.50      4.00      2.00      2.433                       11.1
 0.00     -0.250       3    2      1.00                                       11.2
 0.00      0.50      1.00                                                      11.3
 0.00      1.00                                                                11.4
PANEL                    INTER                                                11.0
 2.50      4.00      2.50      4.00      2.433     2.433                       11.1
-0.25     -0.750       3    2      1.00                                       11.2
 0.00      0.50      1.00                                                      11.3
```

```
 0.00      1.00                                                                  11.4
PANEL                    INTER                                                   11.0
 2.50      4.00      2.50      4.00      2.433     2.00                          11.1
-0.75     -1.00         3    2      1.00                                        11.2
 0.00      0.50      1.00                                                        11.3
 0.00      1.00                                                                  11.4
PANEL                    INTER                                                   11.0
 2.50      4.00      2.50      4.00      2.00      1.567                         11.1
-1.00     -0.75         3    2      1.00                                        11.2
 0.00      0.50      1.00                                                        11.3
 0.00      1.00                                                                  11.4
PANEL                    INTER                                                   11.0
 2.50      4.00      2.50      4.00      1.567     1.567                         11.1
-0.75     -0.25         3    2      1.00                                        11.2
 0.00      0.50      1.00                                                        11.3
 0.00      1.00                                                                  11.4
PANEL                    INTER                                                   11.0
 2.50      4.00      2.50      4.00      1.567     2.00                          11.1
-0.25      0.00         3    2      1.00                                        11.2
 0.00      0.50      1.00                                                        11.3
 0.00      1.00                                                                  11.4
PANEL                    INTER                                                   11.0
 2.00      4.00      2.00      4.00      0.000     0.866                         11.1
 1.00      0.50         3    3      1.00                                        11.2
 0.00      0.50      1.00                                                        11.3
 0.00      0.50      1.00                                                        11.4
PANEL                    INTER                                                   11.0
 2.00      4.00      2.00      4.00      0.866     0.866                         11.1
 0.50     -0.50         3    3      1.00                                        11.2
 0.00      0.50      1.00                                                        11.3
 0.00      0.50      1.00                                                        11.4
PANEL                    INTER                                                   11.0
 2.00      4.00      2.00      4.00      0.866     0.000                         11.1
-0.50     -1.00         3    3      1.00                                        11.2
 0.00      0.50      1.00                                                        11.3
 0.00      0.50      1.00                                                        11.4
BODY                     Y MOTION NACELLE                                        12.0
-0.500     2.00          1.00    4    0    1   11   22                           12.1
 2.0       2.50      3.25      4.50                                              12.2
 0.00      0.50      0.50      0.00                                              12.3
BODY          2          Z MOTION NACELLE                                        12.0
-0.500     2.00          1.00    4    1    0   11   22                           12.1
 2.0       2.50      3.25      4.50                                              12.2
 0.00      0.50      0.50      0.00                                              12.3
BODY          3          FUSELAGE                                                12.0
 0.00      0.00          1.00    4    1    0   23   34                           12.1
 0.00      2.00      4.00      6.00                                              12.2
 0.00      1.00      1.00      0.00                                              12.3
MODES          POLYNOMIAL COEFFICIENTS                                            13.0
    3   40    3    0    1   34    6                                              14.0
PANEL                                                                            15.0
 1 1 1     2 1 1     3 1 0     4 1 1     5 1 0     6 1 1     7 1 1               15.1
 8 1 0     9 1 1    10 1 1    11 1 0    12 1 1     1 2 1     2 2 1               15.1
 3 2 0     4 2 1     5 2 0     6 2 1     7 2 1     8 2 0     9 2 1               15.1
10 2 1    11 2 0    12 2 1     1 3 2 1   2 3 2 1   3 3 2 1   4 3 2 1             15.1
 5 3 2 1   6 3 2 1   7 3 2 1   8 3 2 1   9 3 2 1   10 3 0   11 3 0               15.1
```

```
12 3 0                                                                  15.1
    0    0-1.0          0    0-0.894        0    0-0.866                 15.2
    0    0 0.866        0    0 0.866        0    0-0.866                 15.2
    0    0-0.866        0    0 0.866        1    0-1.0                   15.2
    1    0-0.894        1    0-0.866        1    0 0.866                 15.2
    1    0 0.866        1    0-0.866        1    0-0.866                 15.2
    1    0 0.866        0    0-0.866        0    1-1.0                   15.2
    0    0-2.012        0    1-1.0          0    0 0.5                   15.2
    0    1-1.0          0    0-1.732        0    1-1.0                   15.2
    0    0-0.25         0    1-1.0          0    0 1.732                 15.2
    0    1-1.0          0    0 2.232        0    1-1.0                   15.2
    0    0 0.75         0    1-1.0          0    0-1.232                 15.2
    0    1-1.0                                                           15.2
BODY                                                                     15.0
 1 1 0     2 1 1     3 1 1     1 2 0     2 2 1     3 2 1     1 3 1        15.1
 2 3 1     3 3 0                                                         15.1
    0    0-1.0          0    0-1.0          1    0-1.0                   15.2
    1    0-1.0          0    0-0.5          0    0-2.0                   15.2
$QUIT
```

7.3 OUTPUT LISTING

```
*****************************************************
*                                                   *
*   PROGRAM L216A1  VERSION APR 28, 77 NOW RUNNING. *
*   THE PROGRAM IS PART OF THE DYLOFLX SYSTEM       *
*   DEVELOPED FOR NASA UNDER CONTRACT NAS1-13918.   *
*   DATE OF RUN IS  77/09/17.                       *
*   TIME OF RUN IS  14.18.14.                       *
*                                                   *
*****************************************************
```

```
($DUBLAT                                                                  )
($TITLE    PROGRAM L216 SAMPLE PROBLEM   WING, STRUT, NACELLE, FUSELAGE   )
($TITLE                                                                   )
($TITLE    TWELVE PANELS (2-WING,1-STRUT,6-NACELLE INTERFERENCE,          )
($TITLE    3-FUSELAGE INTERFERENCE)                                       )
($TITLE                                                                   )
($TITLE    THREE SLENDER BODIES (Y-NACELLE,Z-NACELLE,FUSELAGE)            )
($TITLE                                                                   )
($TITLE    SEVENTEEN STRIPS (4-WING,1-STRUT,6-NACELLE INTERFERENCE,       )
($TITLE    6-FUSELAGE INTERFERENCE)                                       )
($TITLE                                                                   )
($TITLE    THIRTY FOUR BOXES (8-WING,2-STRUT,12-NACELLE INTERFERENCE,     )
($TITLE    12-FUSELAGE INTERFERENCE)                                      )
($TITLE                                                                   )
($TITLE    NINE LINE ELEMENTS (3-EACH SLENDER BODY)                       )
($TITLE                                                                   )
($TITLE    THREE DOF (PLUNGE,PITCH,ROLL/                                  )
($TITLE                                                                   )
($TITLE    PITCH REF X=0, ROLL REF Y = 0, Z = 0                           )
($TITLE                                                                   )
($TITLE    POLYNOMIAL MODE INPUT                                          )
($TITLE                                                                   )
(CASE          1                    1                                    )
```

CPU TIME (SECONDS) = .155

```
**********************
*                    *
*  INPUT PARAMETERS  *
*                    *
**********************
```

```
MACH NUMBER                                .8500
BETA                                       .5268
REFERENCE CHORD                           1.5000
REFERENCE SEMI-SPAN                       1.0000
REFERENCE AREA                              6.4000
REDUCED FREQUENCIES                      0.            .5000E+00

TOTAL NUMBER OF PANELS                   12
TOTAL NUMBER OF BODIES                    3
TOTAL NUMBER OF STRIPS                   17
NUMBER OF VERTICAL PANEL STRIPS ON Y=0 PLANE      0
NUMBER OF VERTICAL PANEL BOXES ON Y=0 PLANE       0

MOTION IS SYMMETRIC

GEOMETRY DATA WILL BE SAVED ON TAPE  SAVGEO
```

```
AERO      DATA WILL BE SAVED ON TAPE  SAVAER
```

```
**********************
*                    *
*   GEOMETRY DATA    *
*                    *
**********************
```

```
********************
*                  *
*  PANEL GEOMETRY  *
*                  *
********************
```

```
X1 = INBOARD  LEADING  EDGE X COORDINATE
X2 = INBOARD  TRAILING EDGE X COORDINATE
X3 = OUTBOARD LEADING  EDGE X COORDINATE
X4 = OUTBOARD TRAILING EDGE X COORDINATE
Y1 = INBOARD  Y COORDINATE
Y2 = OUTBOARD Y COORDINATE
Z1 = INBOARD  Z COORDINATE
Z2 = OUTBOARD Z COORDINATE
```

```
*** PANEL NO.  1  INPUT VALUES ***

X1 =    2.000000  X2 =    4.000000  Y1 =     .866000  Z1 =     .500000
X3 =    2.500000  X4 =    4.000000  Y2 =    2.000000  Z2 =     .500000

  3  CHORDWISE DIVISION BOUNDARIES FOR PANEL  1 IN FRACTION OF CHORD
       0.          .5000E+00   .1000E+01
  3   SPANWISE DIVISION BOUNDARIES FOR PANEL  1 IN FRACTION OF SPAN
       0.          .5000E+00   .1000E+01

              COORDINATES OF BOX CORNERS
                 9  BOX CORNERS FOR PANEL   1

            X              Y              Z
```

```
.20000E+01     .86600E+00     .50000E+00
.30000E+01     .86600E+00     .50000E+00
.40000E+01     .86600E+00     .50000E+00
.22500E+01     .14330E+01     .50000E+00
.31250E+01     .14330E+01     .50000E+00
.40000E+01     .14330E+01     .50000E+00
.25000E+01     .20000E+01     .50000E+00
.32500E+01     .20000E+01     .50000E+00
.40000E+01     .20000E+01     .50000E+00

STRIP L.E. CENTERLINE X-COORDINATES

.21250E+01     .23750E+01

AVERAGE CHORDLENGTH OF STRIPS

.18750E+01     .16250E+01


*** PANEL NO.  2  INPUT VALUES ***

X1 =    2.500000  X2 =    4.000000  Y1 =    2.000000  Z1 =     .500000

X3 =    3.000000  X4 =    4.000000  Y2 =    3.000000  Z2 =    1.000000


  3  CHORDWISE DIVISION BOUNDARIES FOR PANEL  2 IN FRACTION OF CHORD

       0.           .5000E+00   .1000E+01

  3   SPANWISE DIVISION BOUNDARIES FOR PANEL  2 IN FRACTION OF SPAN

       0.           .5000E+00   .1000E+01


              COORDINATES OF BOX CORNERS

                 9  BOX CORNERS FOR PANEL   2

          X              Y              Z

       .25000E+01     .20000E+01     .50000E+00
       .32500E+01     .20000E+01     .50000E+00
       .40000E+01     .20000E+01     .50000E+00
       .27500E+01     .25000E+01     .75000E+00
       .33750E+01     .25000E+01     .75000E+00
       .40000E+01     .25000E+01     .75000E+00
       .30000E+01     .30000E+01     .10000E+01
       .35000E+01     .30000E+01     .10000E+01
```

```
    .40000E+01      .30000E+01      .10000E+01
STRIP L.E. CENTERLINE X-COORDINATES
    .26250E+01      .28750E+01
AVERAGE CHORDLENGTH OF STRIPS
    .13750E+01      .11250E+01

*** PANEL NO.  3  INPUT VALUES ***

X1 =    2.500000  X2 =    4.000000  Y1 =    2.000000  Z1 =     .500000
X3 =    2.500000  X4 =    4.000000  Y2 =    2.000000  Z2 =    0.000000

  3  CHORDWISE DIVISION BOUNDARIES FOR PANEL  3 IN FRACTION OF CHORD
       0.          .5000E+00   .1000E+01
  2   SPANWISE DIVISION BOUNDARIES FOR PANEL  3 IN FRACTION OF SPAN
       0.          .1000E+01


              COORDINATES OF BOX CORNERS
                 6  BOX CORNERS FOR PANEL   3

          X              Y              Z
    .25000E+01     .20000E+01     .50000E+00
    .32500E+01     .20000E+01     .50000E+00
    .40000E+01     .20000E+01     .50000E+00
    .25000E+01     .20000E+01     0.
    .32500E+01     .20000E+01     0.
    .40000E+01     .20000E+01     0.
STRIP L.E. CENTERLINE X-COORDINATES
    .25000E+01
AVERAGE CHORDLENGTH OF STRIPS
    .15000E+01
```

```
*** PANEL NO.  4  INPUT VALUES ***

X1 =    2.500000  X2 =    4.000000  Y1 =    2.000000  Z1 =    0.000000
X3 =    2.500000  X4 =    4.000000  Y2 =    2.433000  Z2 =   -.250000

  3  CHORDWISE DIVISION BOUNDARIES FOR PANEL  4 IN FRACTION OF CHORD

       0.          .5000E+00   .1000E+01

  2   SPANWISE DIVISION BOUNDARIES FOR PANEL  4 IN FRACTION OF SPAN

       0.          .1000E+01


              COORDINATES OF BOX CORNERS

                 6  BOX CORNERS FOR PANEL   4

            X              Y              Z

         .25000E+01     .20000E+01     0.
         .32500E+01     .20000E+01     0.
         .40000E+01     .20000E+01     0.
         .25000E+01     .24330E+01     -.25000E+00
         .32500E+01     .24330E+01     -.25000E+00
         .40000E+01     .24330E+01     -.25000E+00

     STRIP L.E. CENTERLINE X-COORDINATES

         .25000E+01

     AVERAGE CHORDLENGTH OF STRIPS

         .15000E+01


*** PANEL NO.  5  INPUT VALUES ***

X1 =    2.500000  X2 =    4.000000  Y1 =    2.433000  Z1 =   -.250000
X3 =    2.500000  X4 =    4.000000  Y2 =    2.433000  Z2 =   -.750000

  3  CHORDWISE DIVISION BOUNDARIES FOR PANEL  5 IN FRACTION OF CHORD

       0.          .5000E+00   .1000E+01
```

```
 2   SPANWISE DIVISION BOUNDARIES FOR PANEL  5 IN FRACTION OF SPAN
       0.            .1000E+01


              COORDINATES OF BOX CORNERS

                 6  BOX CORNERS FOR PANEL   5

            X               Y               Z

         .25000E+01      .24330E+01     -.25000E+00
         .32500E+01      .24330E+01     -.25000E+00
         .40000E+01      .24330E+01     -.25000E+00
         .25000E+01      .24330E+01     -.75000E+00
         .32500E+01      .24330E+01     -.75000E+00
         .40000E+01      .24330E+01     -.75000E+00

     STRIP L.E. CENTERLINE X-COORDINATES

         .25000E+01

     AVERAGE CHORDLENGTH OF STRIPS

         .15000E+01


*** PANEL NO.  6  INPUT VALUES ***

X1 =    2.500000  X2 =    4.000000  Y1 =    2.433000  Z1 =    -.750000

X3 =    2.500000  X4 =    4.000000  Y2 =    2.000000  Z2 =   -1.000000


  3  CHORDWISE DIVISION BOUNDARIES FOR PANEL  6 IN FRACTION OF CHORD
       0.            .5000E+00   .1000E+01
  2   SPANWISE DIVISION BOUNDARIES FOR PANEL  6 IN FRACTION OF SPAN
       0.            .1000E+01


              COORDINATES OF BOX CORNERS

                 6  BOX CORNERS FOR PANEL   6
```

```
          X              Y              Z

       .25000E+01     .24330E+01    -.75000E+00
       .32500E+01     .24330E+01    -.75000E+00
       .40000E+01     .24330E+01    -.75000E+00
       .25000E+01     .20000E+01    -.10000E+01
       .32500E+01     .20000E+01    -.10000E+01
       .40000E+01     .20000E+01    -.10000E+01

    STRIP L.E. CENTERLINE X-COORDINATES

       .25000E+01

    AVERAGE CHORDLENGTH OF STRIPS

       .15000E+01


*** PANEL NO.  7  INPUT VALUES ***

X1 =    2.500000  X2 =    4.000000  Y1 =    2.000000  Z1 =   -1.000000

X3 =    2.500000  X4 =    4.000000  Y2 =    1.567000  Z2 =    -.750000


  3  CHORDWISE DIVISION BOUNDARIES FOR PANEL  7 IN FRACTION OF CHORD

       0.           .5000E+00   .1000E+01

  2   SPANWISE DIVISION BOUNDARIES FOR PANEL  7 IN FRACTION OF SPAN

       0.           .1000E+01


              COORDINATES OF BOX CORNERS

                 6  BOX CORNERS FOR PANEL   7

          X              Y              Z

       .25000E+01     .20000E+01    -.10000E+01
       .32500E+01     .20000E+01    -.10000E+01
       .40000E+01     .20000E+01    -.10000E+01
       .25000E+01     .15670E+01    -.75000E+00
       .32500E+01     .15670E+01    -.75000E+00
       .40000E+01     .15670E+01    -.75000E+00

    STRIP L.E. CENTERLINE X-COORDINATES

       .25000E+01
```

```
     AVERAGE CHORDLENGTH OF STRIPS
         .15000E+01

*** PANEL NO.  8  INPUT VALUES ***

X1 =    2.500000  X2 =    4.000000  Y1 =    1.567000  Z1 =    -.750000
X3 =    2.500000  X4 =    4.000000  Y2 =    1.567000  Z2 =    -.250000

  3  CHORDWISE DIVISION BOUNDARIES FOR PANEL  8 IN FRACTION OF CHORD
       0.           .5000E+00   .1000E+01
  2   SPANWISE DIVISION BOUNDARIES FOR PANEL  8 IN FRACTION OF SPAN
       0.           .1000E+01


              COORDINATES OF BOX CORNERS
                 6  BOX CORNERS FOR PANEL   8

            X              Y              Z

         .25000E+01     .15670E+01    -.75000E+00
         .32500E+01     .15670E+01    -.75000E+00
         .40000E+01     .15670E+01    -.75000E+00
         .25000E+01     .15670E+01    -.25000E+00
         .32500E+01     .15670E+01    -.25000E+00
         .40000E+01     .15670E+01    -.25000E+00
     STRIP L.E. CENTERLINE X-COORDINATES
         .25000E+01
     AVERAGE CHORDLENGTH OF STRIPS
         .15000E+01

*** PANEL NO.  9  INPUT VALUES ***

X1 =    2.500000  X2 =    4.000000  Y1 =    1.567000  Z1 =    -.250000
X3 =    2.500000  X4 =    4.000000  Y2 =    2.000000  Z2 =    0.000000
```

```
  3  CHORDWISE DIVISION BOUNDARIES FOR PANEL  9 IN FRACTION OF CHORD

       0.            .5000E+00   .1000E+01

  2   SPANWISE DIVISION BOUNDARIES FOR PANEL  9 IN FRACTION OF SPAN

       0.            .1000E+01


              COORDINATES OF BOX CORNERS

                 6  BOX CORNERS FOR PANEL   9

           X               Y               Z

        .25000E+01      .15670E+01     -.25000E+00
        .32500E+01      .15670E+01     -.25000E+00
        .40000E+01      .15670E+01     -.25000E+00
        .25000E+01      .20000E+01     0.
        .32500E+01      .20000E+01     0.
        .40000E+01      .20000E+01     0.

     STRIP L.E. CENTERLINE X-COORDINATES

        .25000E+01

     AVERAGE CHORDLENGTH OF STRIPS

        .15000E+01


*** PANEL NO. 10  INPUT VALUES ***

X1 =    2.000000  X2 =    4.000000  Y1 =    0.000000  Z1 =    1.000000

X3 =    2.000000  X4 =    4.000000  Y2 =     .866000  Z2 =     .500000


  3  CHORDWISE DIVISION BOUNDARIES FOR PANEL 10 IN FRACTION OF CHORD

       0.            .5000E+00   .1000E+01

  3   SPANWISE DIVISION BOUNDARIES FOR PANEL 10 IN FRACTION OF SPAN

       0.            .5000E+00   .1000E+01
```

COORDINATES OF BOX CORNERS

9 BOX CORNERS FOR PANEL 10

X	Y	Z
.20000E+01	0.	.10000E+01
.30000E+01	0.	.10000E+01
.40000E+01	0.	.10000E+01
.20000E+01	.43300E+00	.75000E+00
.30000E+01	.43300E+00	.75000E+00
.40000E+01	.43300E+00	.75000E+00
.20000E+01	.86600E+00	.50000E+00
.30000E+01	.86600E+00	.50000E+00
.40000E+01	.86600E+00	.50000E+00

STRIP L.E. CENTERLINE X-COORDINATES

.20000E+01 .20000E+01

AVERAGE CHORDLENGTH OF STRIPS

.20000E+01 .20000E+01

*** PANEL NO. 11 INPUT VALUES ***

X1 = 2.000000 X2 = 4.000000 Y1 = .866000 Z1 = .500000

X3 = 2.000000 X4 = 4.000000 Y2 = .866000 Z2 = -.500000

3 CHORDWISE DIVISION BOUNDARIES FOR PANEL 11 IN FRACTION OF CHORD

0. .5000E+00 .1000E+01

3 SPANWISE DIVISION BOUNDARIES FOR PANEL 11 IN FRACTION OF SPAN

0. .5000E+00 .1000E+01

COORDINATES OF BOX CORNERS

9 BOX CORNERS FOR PANEL 11

X	Y	Z

```
.20000E+01     .86600E+00     .50000E+00
.30000E+01     .86600E+00     .50000E+00
.40000E+01     .86600E+00     .50000E+00
.20000E+01     .86600E+00     0.
.30000E+01     .86600E+00     0.
.40000E+01     .86600E+00     0.
.20000E+01     .86600E+00     -.50000E+00
.30000E+01     .86600E+00     -.50000E+00
.40000E+01     .86600E+00     -.50000E+00

STRIP L.E. CENTERLINE X-COORDINATES

.20000E+01     .20000E+01

AVERAGE CHORDLENGTH OF STRIPS

.20000E+01     .20000E+01


*** PANEL NO. 12  INPUT VALUES ***

X1 =    2.000000  X2 =    4.000000  Y1 =     .866000  Z1 =    -.500000

X3 =    2.000000  X4 =    4.000000  Y2 =   0.000000  Z2 =   -1.000000


  3  CHORDWISE DIVISION BOUNDARIES FOR PANEL 12 IN FRACTION OF CHORD

       0.          .5000E+00   .1000E+01

  3   SPANWISE DIVISION BOUNDARIES FOR PANEL 12 IN FRACTION OF SPAN

       0.          .5000E+00   .1000E+01


              COORDINATES OF BOX CORNERS

                 9  BOX CORNERS FOR PANEL  12

          X              Y              Z

.20000E+01     .86600E+00     -.50000E+00
.30000E+01     .86600E+00     -.50000E+00
.40000E+01     .86600E+00     -.50000E+00
.20000E+01     .43300E+00     -.75000E+00
.30000E+01     .43300E+00     -.75000E+00
.40000E+01     .43300E+00     -.75000E+00
.20000E+01     0.             -.10000E+01
.30000E+01     0.             -.10000E+01
.40000E+01     0.             -.10000E+01
```

```
STRIP L.E. CENTERLINE X-COORDINATES
    .20000E+01      .20000E+01
AVERAGE CHORDLENGTH OF STRIPS
    .20000E+01      .20000E+01
```

```
****************
* PANEL DATA   *
****************
```

ARRAY OF CUMULATIVE BOX NUMBERS FOR ALL PANELS

4	8	10	12	14	16	18	20	22	26	30	34

DIHEDRAL ANGLES FOR ALL PANELS

0.00	26.57	270.00	330.00	270.00	210.00
150.00	90.00	30.00	330.00	270.00	210.00

```
****************
*  STRIP DATA  *
****************
```

Y	CENTERLINE Z	DELYS	DELZS	FRACTION OF PANEL SPAN
.114950E+01	.500000E+00	.567000E+00	0.	.250000E+00
.171650E+01	.500000E+00	.567000E+00	0.	.750000E+00
.225000E+01	.625000E+00	.500000E+00	.250000E+00	.250000E+00
.275000E+01	.875000E+00	.500000E+00	.250000E+00	.750000E+00
.200000E+01	.250000E+00	0.	.500000E+00	.500000E+00
.221650E+01	-.125000E+00	.433000E+00	.250000E+00	.500000E+00
.243300E+01	-.500000E+00	0.	.500000E+00	.500000E+00
.221650E+01	-.875000E+00	.433000E+00	.250000E+00	.500000E+00
.178350E+01	-.875000E+00	.433000E+00	.250000E+00	.500000E+00
.156700E+01	-.500000E+00	0.	.500000E+00	.500000E+00
.178350E+01	-.125000E+00	.433000E+00	.250000E+00	.500000E+00
.216500E+00	.875000E+00	.433000E+00	.250000E+00	.250000E+00
.649500E+00	.625000E+00	.433000E+00	.250000E+00	.750000E+00
.866000E+00	.250000E+00	0.	.500000E+00	.250000E+00
.866000E+00	-.250000E+00	0.	.500000E+00	.750000E+00
.649500E+00	-.625000E+00	.433000E+00	.250000E+00	.250000E+00
.216500E+00	-.875000E+00	.433000E+00	.250000E+00	.750000E+00

```
*****************
*  BOX GEOMETRY*
*****************
```

P A R T 1

COORDINATES OF BOX EDGES AT 1/4 CHORD POINTS

INBOARD			OUTBOARD			BOX
X	Y	Z	X	Y	Z	NO.
.2250E+01	.8660E+00	.5000E+00	.2469E+01	.1433E+01	.5000E+00	1
.3250E+01	.8660E+00	.5000E+00	.3344E+01	.1433E+01	.5000E+00	2
.2469E+01	.1433E+01	.5000E+00	.2688E+01	.2000E+01	.5000E+00	3
.3344E+01	.1433E+01	.5000E+00	.3438E+01	.2000E+01	.5000E+00	4
.2688E+01	.2000E+01	.5000E+00	.2906E+01	.2500E+01	.7500E+00	5
.3438E+01	.2000E+01	.5000E+00	.3531E+01	.2500E+01	.7500E+00	6
.2906E+01	.2500E+01	.7500E+00	.3125E+01	.3000E+01	.1000E+01	7
.3531E+01	.2500E+01	.7500E+00	.3625E+01	.3000E+01	.1000E+01	8
.2688E+01	.2000E+01	.5000E+00	.2688E+01	.2000E+01	0.	9
.3438E+01	.2000E+01	.5000E+00	.3438E+01	.2000E+01	0.	10
.2688E+01	.2000E+01	0.	.2688E+01	.2433E+01	-.2500E+00	11
.3438E+01	.2000E+01	0.	.3438E+01	.2433E+01	-.2500E+00	12
.2688E+01	.2433E+01	-.2500E+00	.2688E+01	.2433E+01	-.7500E+00	13
.3438E+01	.2433E+01	-.2500E+00	.3438E+01	.2433E+01	-.7500E+00	14
.2688E+01	.2433E+01	-.7500E+00	.2688E+01	.2000E+01	-.1000E+01	15
.3438E+01	.2433E+01	-.7500E+00	.3438E+01	.2000E+01	-.1000E+01	16
.2688E+01	.2000E+01	-.1000E+01	.2688E+01	.1567E+01	-.7500E+00	17
.3438E+01	.2000E+01	-.1000E+01	.3438E+01	.1567E+01	-.7500E+00	18
.2688E+01	.1567E+01	-.7500E+00	.2688E+01	.1567E+01	-.2500E+00	19
.3438E+01	.1567E+01	-.7500E+00	.3438E+01	.1567E+01	-.2500E+00	20
.2688E+01	.1567E+01	-.2500E+00	.2688E+01	.2000E+01	0.	21
.3438E+01	.1567E+01	-.2500E+00	.3438E+01	.2000E+01	0.	22
.2250E+01	0.	.1000E+01	.2250E+01	.4330E+00	.7500E+00	23
.3250E+01	0.	.1000E+01	.3250E+01	.4330E+00	.7500E+00	24
.2250E+01	.4330E+00	.7500E+00	.2250E+01	.8660E+00	.5000E+00	25
.3250E+01	.4330E+00	.7500E+00	.3250E+01	.8660E+00	.5000E+00	26
.2250E+01	.8660E+00	.5000E+00	.2250E+01	.8660E+00	0.	27
.3250E+01	.8660E+00	.5000E+00	.3250E+01	.8660E+00	0.	28
.2250E+01	.8660E+00	0.	.2250E+01	.8660E+00	-.5000E+00	29
.3250E+01	.8660E+00	0.	.3250E+01	.8660E+00	-.5000E+00	30
.2250E+01	.8660E+00	-.5000E+00	.2250E+01	.4330E+00	-.7500E+00	31
.3250E+01	.8660E+00	-.5000E+00	.3250E+01	.4330E+00	-.7500E+00	32
.2250E+01	.4330E+00	-.7500E+00	.2250E+01	0.	-.1000E+01	33
.3250E+01	.4330E+00	-.7500E+00	.3250E+01	0.	-.1000E+01	34

PART 2

COORDINATES OF BOX SENDING AND RECEIVING POINTS

1/4 CHORD POINTS			3/4 CHORD POINTS			BOX
X	Y	Z	X	Y	Z	NO.
.2359E+01	.1150E+01	.5000E+00	.2828E+01	.1150E+01	.5000E+00	1
.2797E+01	.1150E+01	.5000E+00	.3766E+01	.1150E+01	.5000E+00	2
.2578E+01	.1717E+01	.5000E+00	.2984E+01	.1717E+01	.5000E+00	3
.3391E+01	.1717E+01	.5000E+00	.3797E+01	.1717E+01	.5000E+00	4
.2797E+01	.2250E+01	.6250E+00	.3141E+01	.2250E+01	.6250E+00	5
.3484E+01	.2250E+01	.6250E+00	.3828E+01	.2250E+01	.6250E+00	6
.3016E+01	.2750E+01	.8750E+00	.3297E+01	.2750E+01	.8750E+00	7
.3578E+01	.2750E+01	.8750E+00	.3859E+01	.2750E+01	.8750E+00	8
.2688E+01	.2000E+01	.2500E+00	.3063E+01	.2000E+01	.2500E+00	9
.3438E+01	.2000E+01	.2500E+00	.3813E+01	.2000E+01	.2500E+00	10
.2688E+01	.2217E+01	-.1250E+00	.3063E+01	.2217E+01	-.1250E+00	11
.3438E+01	.2217E+01	-.1250E+00	.3813E+01	.2217E+01	-.1250E+00	12
.2688E+01	.2433E+01	-.5000E+00	.3063E+01	.2433E+01	-.5000E+00	13
.3438E+01	.2433E+01	-.5000E+00	.3813E+01	.2433E+01	-.5000E+00	14
.2688E+01	.2217E+01	-.8750E+00	.3063E+01	.2217E+01	-.8750E+00	15
.3438E+01	.2217E+01	-.8750E+00	.3813E+01	.2217E+01	-.8750E+00	16
.2688E+01	.1784E+01	-.8750E+00	.3063E+01	.1784E+01	-.8750E+00	17
.3438E+01	.1784E+01	-.8750E+00	.3813E+01	.1784E+01	-.8750E+00	18
.2688E+01	.1567E+01	-.5000E+00	.3063E+01	.1567E+01	-.5000E+00	19
.3438E+01	.1567E+01	-.5000E+00	.3813E+01	.1567E+01	-.5000E+00	20
.2688E+01	.1784E+01	-.1250E+00	.3063E+01	.1784E+01	-.1250E+00	21
.3438E+01	.1784E+01	-.1250E+00	.3813E+01	.1784E+01	-.1250E+00	22
.2250E+01	.2165E+00	.8750E+00	.2750E+01	.2165E+00	.8750E+00	23
.3250E+01	.2165E+00	.8750E+00	.3750E+01	.2165E+00	.8750E+00	24
.2250E+01	.6495E+00	.6250E+00	.2750E+01	.6495E+00	.6250E+00	25
.3250E+01	.6495E+00	.6250E+00	.3750E+01	.6495E+00	.6250E+00	26
.2250E+01	.8660E+00	.2500E+00	.2750E+01	.8660E+00	.2500E+00	27
.3250E+01	.8660E+00	.2500E+00	.3750E+01	.8660E+00	.2500E+00	28
.2250E+01	.8660E+00	-.2500E+00	.2750E+01	.8660E+00	-.2500E+00	29
.3250E+01	.8660E+00	-.2500E+00	.3750E+01	.8660E+00	-.2500E+00	30
.2250E+01	.6495E+00	-.6250E+00	.2750E+01	.6495E+00	-.6250E+00	31
.3250E+01	.6495E+00	-.6250E+00	.3750E+01	.6495E+00	-.6250E+00	32
.2250E+01	.2165E+00	-.8750E+00	.2750E+01	.2165E+00	-.8750E+00	33
.3250E+01	.2165E+00	-.8750E+00	.3750E+01	.2165E+00	-.8750E+00	34

P A R T 3

X-COORDINATES OF SENDING POINTS AS FRACTIONS OF STRIP CHORDLENGTH

.125000E+00	.625000E+00	.125000E+00	.625000E+00	.125000E+00
.625000E+00	.125000E+00	.625000E+00	.125000E+00	.625000E+00
.125000E+00	.625000E+00	.125000E+00	.625000E+00	.125000E+00
.625000E+00	.125000E+00	.625000E+00	.125000E+00	.625000E+00
.125000E+00	.625000E+00	.125000E+00	.625000E+00	.125000E+00
.625000E+00	.125000E+00	.625000E+00	.125000E+00	.625000E+00
.125000E+00	.625000E+00	.125000E+00	.625000E+00	

CENTERLINE CHORDLENGTH OF BOXES

.937500E+00	.937500E+00	.812500E+00	.812500E+00	.687500E+00
.687500E+00	.562500E+00	.562500E+00	.750000E+00	.750000E+00
.750000E+00	.750000E+00	.750000E+00	.750000E+00	.750000E+00
.750000E+00	.750000E+00	.750000E+00	.750000E+00	.750000E+00
.750000E+00	.750000E+00	.100000E+01	.100000E+01	.100000E+01
.100000E+01	.100000E+01	.100000E+01	.100000E+01	.100000E+01
.100000E+01	.100000E+01	.100000E+01	.100000E+01	

BOX WIDTHS

.567000E+00	.567000E+00	.567000E+00	.567000E+00	.559017E+00
.559017E+00	.559017E+00	.559017E+00	.500000E+00	.500000E+00
.499989E+00	.499989E+00	.500000E+00	.500000E+00	.499989E+00
.499989E+00	.499989E+00	.499989E+00	.500000E+00	.500000E+00
.499989E+00	.499989E+00	.499989E+00	.499989E+00	.499989E+00
.499989E+00	.500000E+00	.500000E+00	.500000E+00	.500000E+00
.499989E+00	.499989E+00	.499989E+00	.499989E+00	

```
*******************
*                 *
*  BODY GEOMETRY  *
*                 *
*******************


          *** BODY NO.   1  INPUT VALUES ***
CENTER OF BODY COORDINATES   Y =        2.000000     Z =        -.500000
YFLAG =  1  ZFLAG =  0          MODE SHAPE COEFFICIENT =        1.000000
BODY BOX LIMITS ON INTERFERENCE PANELS FOR THIS BODY =   11   22

          4 BODY ELEMENT ENDPOINTS FOR BODY NO.   1
 .200000E+01    .250000E+01    .325000E+01    .450000E+01
            4 BODY RADII AT ELEMENT ENDPOINTS FOR BODY NO.   1
0.          .500000E+00    .500000E+00   0.
          *** BODY NO.   2  INPUT VALUES ***
CENTER OF BODY COORDINATES   Y =        2.000000     Z =        -.500000
YFLAG =  0  ZFLAG =  1          MODE SHAPE COEFFICIENT =        1.000000
BODY BOX LIMITS ON INTERFERENCE PANELS FOR THIS BODY =   11   22

          4 BODY ELEMENT ENDPOINTS FOR BODY NO.   2
 .200000E+01    .250000E+01    .325000E+01    .450000E+01
            4 BODY RADII AT ELEMENT ENDPOINTS FOR BODY NO.   2
0.          .500000E+00    .500000E+00   0.
          *** BODY NO.   3  INPUT VALUES ***
CENTER OF BODY COORDINATES   Y =        0.000000     Z =        0.000000
YFLAG =  0  ZFLAG =  1          MODE SHAPE COEFFICIENT =        1.000000
BODY BOX LIMITS ON INTERFERENCE PANELS FOR THIS BODY =   23   34

          4 BODY ELEMENT ENDPOINTS FOR BODY NO.   3
```

```
0.          .200000E+01    .400000E+01    .600000E+01
              4 BODY RADII AT ELEMENT ENDPOINTS FOR BODY NO.   3
0.          .100000E+01    .100000E+01    0.
```

```
*****************
*  BODY ARRAYS  *
*****************
```

RECEIVING POINT X	Y	Z	SENDING	LENGTH	AVG.RADIUS	BOX NO.
.2250E+01	.2000E+01	-.5000E+00	.2250E+01	.5000E+00	.2500E+00	35
.2875E+01	.2000E+01	-.5000E+00	.2875E+01	.7500E+00	.5000E+00	36
.3875E+01	.2000E+01	-.5000E+00	.3875E+01	.1250E+01	.2500E+00	37
.2250E+01	.2000E+01	-.5000E+00	.2250E+01	.5000E+00	.2500E+00	38
.2875E+01	.2000E+01	-.5000E+00	.2875E+01	.7500E+00	.5000E+00	39
.3875E+01	.2000E+01	-.5000E+00	.3875E+01	.1250E+01	.2500E+00	40
.1000E+01	0.	0.	.1000E+01	.2000E+01	.5000E+00	41
.3000E+01	0.	0.	.3000E+01	.2000E+01	.1000E+01	42
.5000E+01	0.	0.	.5000E+01	.2000E+01	.5000E+00	43

```
*************************
*                       *
*  END OF GEOMETRY DATA *
*                       *
*************************
```

```
*********************
*                   *
*    MODAL DATA     *
*                   *
*********************
```

POLYNOMIAL DATA FOR MODES DEFINED

PRINT PRESSURES AND GEN. FORCES
TOTAL NUMBER OF MODES

TOTAL NUMBER OF MODES	3
TOTAL NUMBER OF COEFFICIENTS	40
NUMBER OF COEFFICIENTS FOR PANELS	34
NUMBER OF COEFFICIENTS FOR BODIES	6

POLYNOMIAL MODE DEFINITION

PANEL NO.	MODE NO.	POWER OF (X / S)	POWER OF (Y / S)	COEFFICIENT
1	1	0	0	-1.0000
2	1	0	0	-.8940
4	1	0	0	-.8660
6	1	0	0	.8660
7	1	0	0	.8660
9	1	0	0	-.8660
10	1	0	0	-.8660
12	1	0	0	.8660
1	2	1	0	-1.0000
2	2	1	0	-.8940
4	2	1	0	-.8660
6	2	1	0	.8660
7	2	1	0	.8660
9	2	1	0	-.8660
10	2	1	0	-.8660
12	2	1	0	.8660
1	3	0	0	-.8660
1	3	0	1	-1.0000
2	3	0	0	-2.0120
2	3	0	1	-1.0000
3	3	0	0	.5000
3	3	0	1	-1.0000
4	3	0	0	-1.7320
4	3	0	1	-1.0000
5	3	0	0	-.2500
5	3	0	1	-1.0000

6	3	0	0	1.7320
6	3	0	1	-1.0000
7	3	0	0	2.2320
7	3	0	1	-1.0000
8	3	0	0	.7500
8	3	0	1	-1.0000
9	3	0	0	-1.2320
9	3	0	1	-1.0000
10	3	0	0	0.0000
10	3	0	0	0.0000
10	3	0	0	0.0000
10	3	0	0	0.0000
10	3	0	0	0.0000
10	3	0	0	0.0000
10	3	0	0	0.0000
10	3	0	0	0.0000
10	3	0	0	0.0000
10	3	0	0	0.0000
10	3	0	0	0.0000

POLYNOMIAL MODE DEFINITION

PANEL NO.	MODE NO.	POWER OF (X / S)	POWER OF (Y / S)	COEFFICIENT
10	3	0	0	0.0000
10	3	0	0	0.0000
10	3	0	0	0.0000
10	3	0	0	0.0000
10	3	0	0	0.0000
10	3	0	0	0.0000
10	3	0	0	0.0000
10	3	0	0	0.0000
10	3	0	0	0.0000
10	3	0	0	0.0000
10	3	0	0	0.0000
10	3	0	0	0.0000
10	3	0	0	0.0000
10	3	0	0	0.0000
10	3	0	0	0.0000
10	3	0	0	0.0000
10	3	0	0	0.0000
10	3	0	0	0.0000
10	3	0	0	0.0000

THE 34 B-MATRIX ELEMENTS FOR MODE NO. 1

```
-.531563E+00 -.531563E+00 -.460688E+00 -.460688E+00 -.343586E+00 -.343586E+00 -.281116E+00 -.281116E+00 0.          0.
-.324743E+00 -.324743E+00 0.          0.          .324743E+00  .324743E+00  .324743E+00  .324743E+00 0.          0.
-.324743E+00 -.324743E+00 -.432990E+00 -.432990E+00 -.432990E+00 -.432990E+00 0.          0.          0.          0.
 .432990E+00  .432990E+00  .432990E+00  .432990E+00
```

THE 34 B-MATRIX ELEMENTS FOR MODE NO. 2

```
-.125416E+01 -.175250E+01 -.118771E+01 -.156202E+01 -.960967E+00 -.119718E+01 -.847739E+00 -.100587E+01 0.           0.
-.872746E+00 -.111630E+01 0.           0.           .872746E+00  .111630E+01  .872746E+00  .111630E+01 0.           0.
-.872746E+00 -.111630E+01 -.974229E+00 -.140722E+01 -.974229E+00 -.140722E+01 0.           0.           0.           0.
 .974229E+00  .140722E+01  .974229E+00  .140722E+01
```

THE 34 B-MATRIX ELEMENTS FOR MODE NO. 3

```
-.611031E+00 -.611031E+00 -.790770E+00 -.790770E+00 -.880682E+00 -.880682E+00 -.896339E+00 -.896339E+00  .937500E-01  .937500E-01
-.743232E+00 -.743232E+00 -.187500E+00 -.187500E+00  .555740E+00  .555740E+00  .743236E+00  .743236E+00  .187500E+00  .187500E+00
-.555736E+00 -.555736E+00 0.           0.           0.           0.           0.           0.           0.           0.
0.           0.           0.           0.
```

POLYNOMIAL MODE DEFINITION

BODY NO.	MODE NO.	POWER OF (X / S)	POWER OF (Y / S)	COEFFICIENT (ARQ)
2	1	0	0	-1.0000
3	1	0	0	-1.0000
2	2	1	0	-1.0000
3	2	1	0	-1.0000
1	3	0	0	-.5000
2	3	0	0	-2.0000

THE 9 B-MATRIX ELEMENTS FOR MODE NO. 1

0. 0. 0. -.250000E+00 -.750000E+00 -.625000E+00 -.100000E+01 -.200000E+01 -.100000E+01

THE 9 B-MATRIX ELEMENTS FOR MODE NO. 2

0. 0. 0. -.562500E+00 -.215625E+01 -.242188E+01 -.100000E+01 -.600000E+01 -.500000E+01

THE 9 B-MATRIX ELEMENTS FOR MODE NO. 3

-.125000E+00 -.375000E+00 -.312500E+00 -.500000E+00 -.150000E+01 -.125000E+01 0. 0. 0.

```
*****************************************
*                                       *
*   REDUCED FREQUENCY =     0.          *
*                                       *
*****************************************
```

THE 34DOWNWASH W ELEMENTS FOR MODE NO. 1

0.	0.	0.	0.	0.	0.	0.	0.	0.	0.
0.	0.	0.	0.	0.	0.	0.	0.	0.	0.
0.	0.	0.	0.	0.	0.	0.	0.	0.	0.
0.	0.	0.	0.	0.	0.	0.	0.	0.	0.
0.	0.	0.	0.	0.	0.	0.	0.	0.	0.
0.	0.	0.	0.	0.	0.	0.	0.	0.	0.
0.	0.	0.	0.	0.	0.	0.	0.		

THE 34DOWNWASH W ELEMENTS FOR MODE NO. 2

.100000E+01	0.	.100000E+01	0.	.100000E+01	0.	.100000E+01	0.	.894000E+00	0.
.894000E+00	0.	.894000E+00	0.	.894000E+00	0.	0.	0.	0.	0.
0.	0.	0.	0.	0.	0.	0.	0.	0.	0.
0.	0.	0.	0.	0.	0.	0.	0.	0.	0.
0.	0.	0.	0.	0.	0.	0.	0.	0.	0.
0.	0.	0.	0.	0.	0.	0.	0.	0.	0.
0.	0.	0.	0.	0.	0.	0.	0.		

THE 34DOWNWASH W ELEMENTS FOR MODE NO. 3

0.	0.	0.	0.	0.	0.	0.	0.	0.	0.
0.	0.	0.	0.	0.	0.	0.	0.	0.	0.
0.	0.	0.	0.	0.	0.	0.	0.	0.	0.
0.	0.	0.	0.	0.	0.	0.	0.	0.	0.
0.	0.	0.	0.	0.	0.	0.	0.	0.	0.
0.	0.	0.	0.	0.	0.	0.	0.	0.	0.
0.	0.	0.	0.	0.	0.	0.	0.		

THE 9 WJ MATRIX ELEMENTS FOR MODE NO. 1

0.	0.	0.	0.	0.	0.	0.	0.	0.	0.
0.	0.	0.	0.	0.	0.	0.	0.		

THE 9 WJ-PRIME ELEMENTS FOR MODE NO. 1

0.	0.	0.	0.	0.	0.	0.	0.	0.	0.
0.	0.	0.	0.	0.	0.	0.	0.		

COL. NO. 1 OF LINE ELEMENT PRESSURE COEFFICIENT MATRIX

0.	0.	0.	0.	0.	0.	0.	0.	0.	0.
0.	0.	0.	0.	0.	0.	0.	0.		

THE 9 WJ MATRIX ELEMENTS FOR MODE NO. 2

```
0.            0.            0.            0.            0.            0.            .100000E+01 0.            .100000E+01 0.
 .100000E+01 0.             .100000E+01 0.             .100000E+01 0.             .100000E+01 0.

                        THE   9 WJ-PRIME  ELEMENTS FOR MODE NO.   2

0.            0.            0.            0.            0.            0.            0.            0.            0.            0.
0.            0.            0.            0.            0.            0.            0.            0.

COL. NO.   2 OF LINE ELEMENT PRESSURE COEFFICIENT MATRIX

0.            0.            0.            0.            0.            0.            .628319E+01 0.            0.            0.
-.251327E+01 0.             .314159E+01 0.            0.            0.            -.314159E+01 0.

                        THE   9 WJ MATRIX ELEMENTS FOR MODE NO.   3

0.            0.            0.            0.            0.            0.            0.            0.            0.            0.
0.            0.            0.            0.            0.            0.            0.            0.

                        THE   9 WJ-PRIME  ELEMENTS FOR MODE NO.   3

0.            0.            0.            0.            0.            0.            0.            0.            0.            0.
0.            0.            0.            0.            0.            0.            0.            0.

COL. NO.   3 OF LINE ELEMENT PRESSURE COEFFICIENT MATRIX

0.            0.            0.            0.            0.            0.            0.            0.            0.            0.
0.            0.            0.            0.            0.            0.            0.            0.
```

MODE NO 1

****
* *
* BOX PRESSURE DIFFERENCES *
* *
****

BOX NO.	XOC	X	Y	Z	PRESSURE DIFFERENCE REAL	IMAGINARY
1	.12500	2.35938	1.14950	.50000	0.	0.
2	.62500	3.29688	1.14950	.50000	0.	0.
3	.12500	2.57813	1.71650	.50000	0.	0.
4	.62500	3.39063	1.71650	.50000	0.	0.
5	.12500	2.79688	2.25000	.62500	0.	0.
6	.62500	3.48438	2.25000	.62500	0.	0.
7	.12500	3.01563	2.75000	.87500	0.	0.
8	.62500	3.57813	2.75000	.87500	0.	0.
9	.12500	2.68750	2.00000	.25000	0.	0.
10	.62500	3.43750	2.00000	.25000	0.	0.
11	.12500	2.68750	2.21650	-.12500	0.	0.
12	.62500	3.43750	2.21650	-.12500	0.	0.
13	.12500	2.68750	2.43300	-.50000	0.	0.
14	.62500	3.43750	2.43300	-.50000	0.	0.
15	.12500	2.68750	2.21650	-.87500	0.	0.
16	.62500	3.43750	2.21650	-.87500	0.	0.
17	.12500	2.68750	1.78350	-.87500	0.	0.
18	.62500	3.43750	1.78350	-.87500	0.	0.
19	.12500	2.68750	1.56700	-.50000	0.	0.
20	.62500	3.43750	1.56700	-.50000	0.	0.
21	.12500	2.68750	1.78350	-.12500	0.	0.
22	.62500	3.43750	1.78350	-.12500	0.	0.
23	.12500	2.25000	.21650	.87500	0.	0.
24	.62500	3.25000	.21650	.87500	0.	0.
25	.12500	2.25000	.64950	.62500	0.	0.
26	.62500	3.25000	.64950	.62500	0.	0.
27	.12500	2.25000	.86600	.25000	0.	0.
28	.62500	3.25000	.86600	.25000	0.	0.
29	.12500	2.25000	.86600	-.25000	0.	0.
30	.62500	3.25000	.86600	-.25000	0.	0.
31	.12500	2.25000	.64950	-.62500	0.	0.
32	.62500	3.25000	.64950	-.62500	0.	0.
33	.12500	2.25000	.21650	-.87500	0.	0.
34	.62500	3.25000	.21650	-.87500	0.	0.

```
*************************
*                       *
*        PANEL          *
*  SECTIONAL DERIVATIVES *
*                       *
*************************
```

MODE NO 1

STRIP NO.	Y	Z	YOS	LIFT COEFFICIENT REAL	LIFT COEFFICIENT IMAG	MOMENT COEFFICIENT REAL	MOMENT COEFFICIENT IMAG
1	1.1495	.5000	1.1495	0.000000	0.000000	0.000000	0.000000
2	1.7165	.5000	1.7165	0.000000	0.000000	0.000000	0.000000
3	2.2500	.6250	2.2500	0.000000	0.000000	0.000000	0.000000
4	2.7500	.8750	2.7500	0.000000	0.000000	0.000000	0.000000
5	2.0000	.2500	2.0000	0.000000	0.000000	0.000000	0.000000
6	2.2165	-.1250	2.2165	0.000000	0.000000	0.000000	0.000000
7	2.4330	-.5000	2.4330	0.000000	0.000000	0.000000	0.000000
8	2.2165	-.8750	2.2165	0.000000	0.000000	0.000000	0.000000
9	1.7835	-.8750	1.7835	0.000000	0.000000	0.000000	0.000000
10	1.5670	-.5000	1.5670	0.000000	0.000000	0.000000	0.000000
11	1.7835	-.1250	1.7835	0.000000	0.000000	0.000000	0.000000
12	.2165	.8750	.2165	0.000000	0.000000	0.000000	0.000000
13	.6495	.6250	.6495	0.000000	0.000000	0.000000	0.000000
14	.8660	.2500	.8660	0.000000	0.000000	0.000000	0.000000
15	.8660	-.2500	.8660	0.000000	0.000000	0.000000	0.000000
16	.6495	-.6250	.6495	0.000000	0.000000	0.000000	0.000000
17	.2165	-.8750	.2165	0.000000	0.000000	0.000000	0.000000

```
*************************
*                       *
*        BODY           *
*  SECTIONAL DERIVATIVES *
*                       *
*************************
```

MODE NO 1

BODY NO.	Y	Z	YOS	LIFT COEFFICIENT REAL	LIFT COEFFICIENT IMAG	MOMENT COEFFICIENT REAL	MOMENT COEFFICIENT IMAG
1	2.0000	-.5000	2.0000	0.000000	0.000000	0.000000	0.000000
2	2.0000	-.5000	2.0000	0.000000	0.000000	0.000000	0.000000
3	0.0000	0.0000	0.0000	0.000000	0.000000	0.000000	0.000000

```
*************************
*                       *
*   TOTAL DERIVATIVES   *
*                       *
*************************
```

CZ = FORCE COEFFICIENT IN Z DIRECTION

```
CY  = FORCE COEFFICIENT IN Y DIRECTION
CM  = PITCHING MOMENT COEFFICIENT
CN  = YAWING   MOMENT COEFFICIENT
CLI = ROLLING MOMENT COEFFICIENT

                    REAL          IMAG                          REAL          IMAG


  CZ =          0.000000      0.000000        CY =          0.000000      0.000000
  CM =          0.000000      0.000000        CN =          0.000000      0.000000
  CL(ROLL) =    0.000000      0.000000

***************************
*                         *
* GENERALIZED AIRFORCES   *
*                         *
***************************


   PRESSURE MODE     DEFLECTION MODE          GENERALIZED FORCES

                                                  REAL              IMAGINARY

          1                  1          0.                0.
          1                  2          0.                0.
          1                  3          0.                0.
```

MODE NO 2

BOX PRESSURE DIFFERENCES

BOX NO.	XOC	X	Y	Z	PRESSURE DIFFERENCE REAL	IMAGINARY
1	.12500	2.35938	1.14950	.50000	.91494382E+01	0.
2	.62500	3.29688	1.14950	.50000	.31077541E+01	0.
3	.12500	2.57813	1.71650	.50000	.11343640E+02	0.
4	.62500	3.39063	1.71650	.50000	.30487371E+01	0.
5	.12500	2.79688	2.25000	.62500	.75669673E+01	0.
6	.62500	3.48438	2.25000	.62500	.14971521E+01	0.
7	.12500	3.01563	2.75000	.87500	.69998091E+01	0.
8	.62500	3.57813	2.75000	.87500	.10673323E+01	0.
9	.12500	2.68750	2.00000	.25000	.51312678E+01	0.
10	.62500	3.43750	2.00000	.25000	.15097678E+01	0.
11	.12500	2.68750	2.21650	-.12500	-.33269884E+01	0.
12	.62500	3.43750	2.21650	-.12500	.11284985E+01	0.
13	.12500	2.68750	2.43300	-.50000	-.11497148E+00	0.
14	.62500	3.43750	2.43300	-.50000	-.40036117E+00	0.
15	.12500	2.68750	2.21650	-.87500	.24316808E+01	0.
16	.62500	3.43750	2.21650	-.87500	-.20969048E+01	0.
17	.12500	2.68750	1.78350	-.87500	.15407711E+01	0.
18	.62500	3.43750	1.78350	-.87500	-.23831754E+01	0.
19	.12500	2.68750	1.56700	-.50000	-.31564297E+01	0.
20	.62500	3.43750	1.56700	-.50000	-.13507149E+01	0.
21	.12500	2.68750	1.78350	-.12500	-.82576135E+01	0.
22	.62500	3.43750	1.78350	-.12500	-.27927022E+00	0.
23	.12500	2.25000	.21650	.87500	.20136262E+01	0.
24	.62500	3.25000	.21650	.87500	.10162346E+01	0.
25	.12500	2.25000	.64950	.62500	.24778814E+01	0.
26	.62500	3.25000	.64950	.62500	.10735329E+01	0.
27	.12500	2.25000	.86600	.25000	-.42442539E+01	0.
28	.62500	3.25000	.86600	.25000	-.19566304E+01	0.
29	.12500	2.25000	.86600	-.25000	-.29644657E+01	0.
30	.62500	3.25000	.86600	-.25000	-.16783874E+01	0.
31	.12500	2.25000	.64950	-.62500	-.18066716E+01	0.
32	.62500	3.25000	.64950	-.62500	-.89402465E+00	0.
33	.12500	2.25000	.21650	-.87500	-.14860942E+01	0.
34	.62500	3.25000	.21650	-.87500	-.66953486E+00	0.

```
*************************
*                       *
*        PANEL          *
*  SECTIONAL DERIVATIVES *
*                       *
*************************
```

MODE NO 2

STRIP NO.	Y	Z	YOS	LIFT COEFFICIENT REAL	LIFT COEFFICIENT IMAG	MOMENT COEFFICIENT REAL	MOMENT COEFFICIENT IMAG
1	1.1495	.5000	1.1495	6.128596	0.000000	-1.543013	0.000000
2	1.7165	.5000	1.7165	7.196189	0.000000	-1.661708	0.000000
3	2.2500	.6250	2.2500	4.532060	0.000000	-.940795	0.000000
4	2.7500	.8750	2.7500	4.033571	0.000000	-.771029	0.000000
5	2.0000	.2500	2.0000	3.320518	0.000000	-.792507	0.000000
6	2.2165	-.1250	2.2165	-1.099245	0.000000	-.144719	0.000000
7	2.4330	-.5000	2.4330	-.257666	0.000000	.132299	0.000000
8	2.2165	-.8750	2.2165	.167388	0.000000	.503303	0.000000
9	1.7835	-.8750	1.7835	-.421202	0.000000	.648444	0.000000
10	1.5670	-.5000	1.5670	-2.253572	0.000000	.619375	0.000000
11	1.7835	-.1250	1.7835	-4.268442	0.000000	.603373	0.000000
12	.2165	.8750	.2165	1.514930	0.000000	-.443425	0.000000
13	.6495	.6250	.6495	1.775707	0.000000	-.490347	0.000000
14	.8660	.2500	.8660	-3.100442	0.000000	.876713	0.000000
15	.8660	-.2500	.8660	-2.321427	0.000000	.709775	0.000000
16	.6495	-.6250	.6495	-1.350348	0.000000	.392300	0.000000
17	.2165	-.8750	.2165	-1.077815	0.000000	.302111	0.000000

```
*************************
*                       *
*        BODY           *
*  SECTIONAL DERIVATIVES *
*                       *
*************************
```

MODE NO 2

BODY NO.	Y	Z	YOS	LIFT COEFFICIENT REAL	LIFT COEFFICIENT IMAG	MOMENT COEFFICIENT REAL	MOMENT COEFFICIENT IMAG
1	2.0000	-.5000	2.0000	0.000000	0.000000	0.000000	0.000000
2	2.0000	-.5000	2.0000	.000000	0.000000	.163363	0.000000
3	0.0000	0.0000	0.0000	0.000000	0.000000	.116355	0.000000

```
*************************
*                       *
*   TOTAL DERIVATIVES   *
*                       *
*************************
```

CZ = FORCE COEFFICIENT IN Z DIRECTION

```
CY  = FORCE COEFFICIENT IN Y DIRECTION
CM  = PITCHING MOMENT COEFFICIENT
CN  = YAWING   MOMENT COEFFICIENT
CLI = ROLLING MOMENT COEFFICIENT
```

	REAL	IMAG		REAL	IMAG
CZ =	3.150242	0.000000	CY =	-.357263	0.000000
CM =	-4.293040	0.000000	CN =	0.000000	0.000000
CL(ROLL) =	0.000000	0.000000			

```
**************************
*                        *
* GENERALIZED AIRFORCES  *
*                        *
**************************
```

PRESSURE MODE	DEFLECTION MODE	GENERALIZED FORCES REAL	IMAGINARY
2	1	-.20158940E+02	0.
2	2	-.41205394E+02	0.
2	3	-.28271777E+02	0.

MODE NO 3

BOX PRESSURE DIFFERENCES

BOX NO.	XOC	X	Y	Z	PRESSURE DIFFERENCE REAL	IMAGINARY
1	.12500	2.35938	1.14950	.50000	0.	0.
2	.62500	3.29608	1.14950	.50000	0.	0.
3	.12500	2.57813	1.71650	.50000	0.	0.
4	.62500	3.39063	1.71650	.50000	0.	0.
5	.12500	2.79688	2.25000	.62500	0.	0.
6	.62500	3.48438	2.25000	.62500	0.	0.
7	.12500	3.01563	2.75000	.87500	0.	0.
8	.62500	3.57813	2.75000	.87500	0.	0.
9	.12500	2.68750	2.00000	.25000	0.	0.
10	.62500	3.43750	2.00000	.25000	0.	0.
11	.12500	2.68750	2.21650	-.12500	0.	0.
12	.62500	3.43750	2.21650	-.12500	0.	0.
13	.12500	2.68750	2.43300	-.50000	0.	0.
14	.62500	3.43750	2.43300	-.50000	0.	0.
15	.12500	2.68750	2.21650	-.87500	0.	0.
16	.62500	3.43750	2.21650	-.87500	0.	0.
17	.12500	2.63750	1.78350	-.87500	0.	0.
18	.62500	3.43750	1.78350	-.87500	0.	0.
19	.12500	2.63750	1.56700	-.50000	0.	0.
20	.62500	3.43750	1.56700	-.50000	0.	0.
21	.12500	2.68750	1.78350	-.12500	0.	0.
22	.62500	3.43750	1.78350	-.12500	0.	0.
23	.12500	2.25000	.21650	.87500	0.	0.
24	.62500	3.25000	.21650	.87500	0.	0.
25	.12500	2.25000	.64950	.62500	0.	0.
26	.62500	3.25000	.64950	.62500	0.	0.
27	.12500	2.25000	.86600	.25000	0.	0.
28	.62500	3.25000	.86600	.25000	0.	0.
29	.12500	2.25000	.86600	-.25000	0.	0.
30	.62500	3.25000	.86600	-.25000	0.	0.
31	.12500	2.25000	.64950	-.62500	0.	0.
32	.62500	3.25000	.64950	-.62500	0.	0.
33	.12500	2.25000	.21650	-.87500	0.	0.
34	.62500	3.25000	.21650	-.87500	0.	0.

```
*************************
*                       *
*       PANEL           *
*  SECTIONAL DERIVATIVES *
*                       *
*************************
```

MODE NO 3

STRIP NO.	Y	Z	YOS	LIFT COEFFICIENT REAL	LIFT COEFFICIENT IMAG	MOMENT COEFFICIENT REAL	MOMENT COEFFICIENT IMAG
1	1.1495	.5000	1.1495	0.000000	0.000000	0.000000	0.000000
2	1.7165	.5000	1.7165	0.000000	0.000000	0.000000	0.000000
3	2.2500	.6250	2.2500	0.000000	0.000000	0.000000	0.000000
4	2.7500	.8750	2.7500	0.000000	0.000000	0.000000	0.000000
5	2.0000	.2500	2.0000	0.000000	0.000000	0.000000	0.000000
6	2.2165	-.1250	2.2165	0.000000	0.000000	0.000000	0.000000
7	2.4330	-.5000	2.4330	0.000000	0.000000	0.000000	0.000000
8	2.2165	-.8750	2.2165	0.000000	0.000000	0.000000	0.000000
9	1.7835	-.8750	1.7835	0.000000	0.000000	0.000000	0.000000
10	1.5670	-.5000	1.5670	0.000000	0.000000	0.000000	0.000000
11	1.7835	-.1250	1.7835	0.000000	0.000000	0.000000	0.000000
12	.2165	.8750	.2165	0.000000	0.000000	0.000000	0.000000
13	.6495	.6250	.6495	0.000000	0.000000	0.000000	0.000000
14	.8660	.2500	.8660	0.000000	0.000000	0.000000	0.000000
15	.8660	-.2500	.8660	0.000000	0.000000	0.000000	0.000000
16	.6495	-.6250	.6495	0.000000	0.000000	0.000000	0.000000
17	.2165	-.8750	.2165	0.000000	0.000000	0.000000	0.000000

```
*************************
*                       *
*       BODY            *
*  SECTIONAL DERIVATIVES *
*                       *
*************************
```

MODE NO 3

BODY NO.	Y	Z	YOS	LIFT COEFFICIENT REAL	LIFT COEFFICIENT IMAG	MOMENT COEFFICIENT REAL	MOMENT COEFFICIENT IMAG
1	2.0000	-.5000	2.0000	0.000000	0.000000	0.000000	0.000000
2	2.0000	-.5000	2.0000	0.000000	0.000000	0.000000	0.000000
3	0.0000	0.0000	0.0000	0.000000	0.000000	0.000000	0.000000

```
*************************
*                       *
*   TOTAL DERIVATIVES   *
*                       *
*************************
```

CZ = FORCE COEFFICIENT IN Z DIRECTION

```
CY  = FORCE COEFFICIENT IN Y-DIRECTION
CM  = PITCHING MOMENT COEFFICIENT
CN  = YAWING   MOMENT COEFFICIENT
CL1 = ROLLING MOMENT COEFFICIENT
```

	REAL	IMAG		REAL	IMAG
CZ =	0.000000	0.000000	CY =	0.000000	0.000000
CM =	0.000000	0.000000	CN =	0.000000	0.000000
CL(ROLL) =	0.000000	0.000000			

```
*************************
*                       *
* GENERALIZED AIRFORCES *
*                       *
*************************
```

PRESSURE MODE	DEFLECTION MODE	GENERALIZED FORCES REAL	IMAGINARY
3	1	0.	0.
3	2	0.	0.
3	3	0.	0.

```
*****************************************
*                                       *
*   REDUCED FREQUENCY =     .50000E+00  *
*                                       *
*****************************************
```

THE 3-DOWNWASH W ELEMENTS FOR MODE NO. 1

0.	.666667E+00	0.	.666667E+00	0.	.666667E+00	0.	.666667E+00	0.	.596000E+00
0.	.596000E+00	0.	.596000E+00	0.	.596000E+00	0.	0.	0.	0.
0.	0.	0.	0.	0.	0.	0.	0.	0.	0.
0.	0.	0.	0.	0.	0.	0.	0.	0.	0.
0.	0.	0.	0.	0.	0.	0.	0.	0.	0.
0.	0.	0.	0.	0.	0.	0.	0.	0.	0.
0.	0.	0.	0.	0.	0.	0.	0.		

THE 3-DOWNWASH W ELEMENTS FOR MODE NO. 2

.100000E+01	.188542E+01	.100000E+01	.251042E+01	.100000E+01	.198958E+01	.100000E+01	.253125E+01	.894000E+00	.187181E+01
.894000E+00	.228156E+01	.894000E+00	.196494E+01	.894000E+00	.230019E+01	0.	0.	0.	0.
0.	0.	0.	0.	0.	0.	0.	0.	0.	0.
0.	0.	0.	0.	0.	0.	0.	0.	0.	0.
0.	0.	0.	0.	0.	0.	0.	0.	0.	0.
0.	0.	0.	0.	0.	0.	0.	0.	0.	0.
0.	0.	0.	0.	0.	0.	0.	0.		

THE 3-DOWNWASH W ELEMENTS FOR MODE NO. 3

0.	.766333E+00	0.	.766333E+00	0.	.114433E+01	0.	.114433E+01	0.	.152767E+01
0.	.152767E+01	0.	.190035E+01	0.	.190035E+01	0.	-.166667E+00	0.	-.166667E+00
0.	0.	0.	0.	0.	0.	0.	0.	0.	0.
0.	0.	0.	0.	0.	0.	0.	0.	0.	0.
0.	0.	0.	0.	0.	0.	0.	0.	0.	0.
0.	0.	0.	0.	0.	0.	0.	0.	0.	0.
0.	0.	0.	0.	0.	0.	0.	0.		

THE 9 WJ MATRIX ELEMENTS FOR MODE NO. 1

0.	0.	0.	0.	0.	0.	0.	.666667E+00	0.	.666667E+00
0.	.666667E+00	0.	.666667E+00	0.	.666667E+00	0.	.666667E+00		

THE 9 WJ-PRIME ELEMENTS FOR MODE NO. 1

0.	0.	0.	0.	0.	0.	0.	0.	0.	0.
0.	0.	0.	0.	0.	0.	0.	0.		

COL. NO. 1 OF LINE ELEMENT PRESSURE COEFFICIENT MATRIX

0.	0.	0.	0.	0.	0.	-.349066E+00	.418879E+01	-.698132E+00	0.
-.349066E+00	-.167552E+01	-.698132E+00	.209440E+01	-.139626E+01	0.	-.698132E+00	-.209440E+01		

THE 9 WJ MATRIX ELEMENTS FOR MODE NO. 2

```
 0.            0.            0.            0.            0.            0.            .100000E+01  .150000E+01  .100000E+01  .191667E+01
 .100000E+01  .258333E+01  .100000E+01  .666667E+00  .100000E+01  .200000E+01  .100000E+01  .333333E+01

                        THE   9 WJ-PRIME  ELEMENTS FOR MODE NO.   2

 0.            0.            0.            0.            0.            0.            0.            .666667E+00 0.            .666667E+00
 0.            .666667E+00 0.            .666667E+00 0.            .666667E+00 0.            .666667E+00

COL. NO.   2 OF LINE ELEMENT PRESSURE COEFFICIENT MATRIX

 0.            0.            0.            0.            0.            0.            .549779E+01  .104720E+02 -.200713E+01  .209440E+01
-.386590E+01 -.544543E+01  .244346E+01  .418879E+01 -.418879E+01  .418879E+01 -.663225E+01 -.837758E+01

                        THE   9 WJ MATRIX ELEMENTS FOR MODE NO.   3

 0.            .333333E+00 0.            .333333E+00 0.            .333333E+00 0.            .133333E+01 0.            .133333E+01
 0.            .133333E+01 0.            0.            0.            0.            0.            0.

                        THE   9 WJ-PRIME  ELEMENTS FOR MODE NO.   3

 0.            0.            0.            0.            0.            0.            0.            0.            0.            0.
 0.            0.            0.            0.            0.            0.            0.            0.

COL. NO.   3 OF LINE ELEMENT PRESSURE COEFFICIENT MATRIX

-.174533E+00  .209440E+01 -.349066E+00 0.           -.174533E+00 -.837758E+00 -.698132E+00  .837758E+01 -.139626E+01 0.
-.698132E+00 -.335103E+01 0.            0.            0.            0.            0.            0.
```

```
*************************
*                       *
*        PANEL          *
*  SECTIONAL DERIVATIVES *
*                       *
*************************
```

MODE NO 1

STRIP NO.	Y	Z	YOS	LIFT COEFFICIENT REAL	LIFT COEFFICIENT IMAG	MOMENT COEFFICIENT REAL	MOMENT COEFFICIENT IMAG
1	1.1495	.5000	1.1495	-1.077532	3.194981	.798016	-1.015790
2	1.7165	.5000	1.7165	-1.327917	3.704252	.891397	-1.081647
3	2.2500	.6250	2.2500	-.652794	2.570390	.500485	-.710637
4	2.7500	.8750	2.7500	-.289565	2.235104	.353334	-.561732
5	2.0000	.2500	2.0000	-.523117	1.481614	.383094	-.410516
6	2.2165	-.1250	2.2165	3.199165	-.567326	-.739911	-.358468
7	2.4330	-.5000	2.4330	.941367	-.143000	-.283942	-.100271
8	2.2165	-.8750	2.2165	-1.185978	.107618	.112845	.175621
9	1.7835	-.8750	1.7835	-1.181796	-.068633	.088610	.276432
10	1.5670	-.5000	1.5670	1.122871	-.929562	-.459241	.114996
11	1.7835	-.1250	1.7835	3.680597	-1.572065	-1.104456	.014049
12	.2165	.8750	.2165	.640028	-.004517	-.341864	-.132291
13	.6495	.6250	.6495	.520885	.212283	-.264279	-.186194
14	.8660	.2500	.8660	1.122890	-2.116290	-.750644	.650997
15	.8660	-.2500	.8660	.651586	-1.567688	-.499477	.527301
16	.6495	-.6250	.6495	.095301	-.820265	-.149081	.293226
17	.2165	-.8750	.2165	.005856	-.573246	-.092716	.199100

```
*************************
*                       *
*        BODY           *
*  SECTIONAL DERIVATIVES *
*                       *
*************************
```

MODE NO 1

BODY NO.	Y	Z	YOS	LIFT COEFFICIENT REAL	LIFT COEFFICIENT IMAG	MOMENT COEFFICIENT REAL	MOMENT COEFFICIENT IMAG
1	2.0000	-.5000	2.0000	0.000000	0.000000	0.000000	0.000000
2	2.0000	-.5000	2.0000	-.132645	-.000000	.056898	.108909
3	0.0000	0.0000	0.0000	-.232711	0.000000	.116355	.077570

```
*************************
*                       *
*   TOTAL DERIVATIVES   *
*                       *
*************************
```

CZ = FORCE COEFFICIENT IN Z DIRECTION

```
CY  = FORCE COEFFICIENT IN Y DIRECTION
CM  = PITCHING MOMENT COEFFICIENT
CN  = YAWING   MOMENT COEFFICIENT
CLI = ROLLING MOMENT COEFFICIENT
```

	REAL	IMAG		REAL	IMAG
CZ =	-.167896	1.491580	CY =	.312622	-.546109
CM =	.254303	-1.967475	CN =	0.000000	0.000000
CL(ROLL) =	0.000000	0.000000			

```
*************************
*                       *
* GENERALIZED AIRFORCES *
*                       *
*************************
```

PRESSURE MODE	DEFLECTION MODE	GENERALIZED FORCES REAL	IMAGINARY
1	1	.10743960E+01	-.95446711E+01
1	2	.62806127E+01	-.18883315E+02
1	3	-.52073026E+01	-.15261435E+02

```
*************************
*                       *
*        PANEL          *
*  SECTIONAL DERIVATIVES *
*                       *
*************************
```

MODE NO 2

STRIP NO.	Y	Z	YOS	LIFT COEFFICIENT REAL	LIFT COEFFICIENT IMAG	MOMENT COEFFICIENT REAL	MOMENT COEFFICIENT IMAG
1	1.1495	.5000	1.1495	1.790107	12.374177	.576669	-5.163086
2	1.7165	.5000	1.7165	1.937919	14.594729	.788990	-5.522736
3	2.2500	.6250	2.2500	2.054543	9.873698	.334609	-3.532105
4	2.7500	.8750	2.7500	2.547130	8.222081	.192291	-2.752712
5	2.0000	.2500	2.0000	.859373	5.718992	.400775	-2.124639
6	2.2165	-.1250	2.2165	9.473777	-7.492111	-3.132902	-.176688
7	2.4330	-.5000	2.4330	2.041166	-2.408064	-1.160007	.299221
8	2.2165	-.8750	2.2165	-3.634591	1.853469	.648582	.962125
9	1.7835	-.8750	1.7835	-3.912327	1.287340	.674136	1.170871
10	1.5670	-.5000	1.5670	2.090561	-5.281043	-1.295902	1.355147
11	1.7835	-.1250	1.7835	8.613097	-12.914583	-3.552102	1.797665
12	.2165	.8750	.2165	1.984670	-1.146380	-1.358560	.167016
13	.6495	.6250	.6495	1.992944	-.215539	-1.227711	-.204409
14	.8660	.2500	.8660	-.008968	-8.644974	-1.200906	3.577641
15	.8660	-.2500	.8660	-.566900	-6.182462	-.633969	2.627093
16	.6495	-.6250	.6495	-1.061793	-2.714138	.009374	1.219317
17	.2165	-.8750	.2165	-.910193	-1.747225	.078337	.757299

```
*************************
*                       *
*        BODY           *
*  SECTIONAL DERIVATIVES *
*                       *
*************************
```

MODE NO 2

BODY NO.	Y	Z	YOS	LIFT COEFFICIENT REAL	LIFT COEFFICIENT IMAG	MOMENT COEFFICIENT REAL	MOMENT COEFFICIENT IMAG
1	2.0000	-.5000	2.0000	0.000000	0.000000	0.000000	0.000000
2	2.0000	-.5000	2.0000	-.407534	.125664	.352251	.278555
3	0.0000	0.0000	0.0000	-.698132	.232711	.517135	.116355

```
*************************
*                       *
*   TOTAL DERIVATIVES   *
*                       *
*************************
```

CZ = FORCE COEFFICIENT IN Z DIRECTION

CY = FORCE COEFFICIENT IN Y DIRECTION
CM = PITCHING MOMENT COEFFICIENT
CN = YAWING MOMENT COEFFICIENT
CLI = ROLLING MOMENT COEFFICIENT

	REAL	IMAG		REAL	IMAG
CZ =	2.099154	4.746845	CY =	.099798	-2.336862
CM =	-1.220099	-7.335982	CN =	0.000000	0.000000
CL(ROLL) =	0.000000	0.000000			

```
*************************
*                       *
* GENERALIZED AIRFORCES *
*                       *
*************************
```

PRESSURE MODE	DEFLECTION MODE	GENERALIZED FORCES REAL	IMAGINARY
2	1	-.13432744E+02	-.30374634E+02
2	2	-.11708000E+02	-.70408771E+02
2	3	-.42219049E+02	-.42446121E+02

```
*************************
*                       *
*        PANEL          *
*  SECTIONAL DERIVATIVES *
*                       *
*************************
```

MODE NO 3

STRIP NO.	Y	Z	YOS	LIFT COEFFICIENT REAL	LIFT COEFFICIENT IMAG	MOMENT COEFFICIENT REAL	MOMENT COEFFICIENT IMAG
1	1.1495	.5000	1.1495	-.212914	3.032498	.355447	-1.164658
2	1.7165	.5000	1.7165	-.574619	4.127100	.661053	-1.420387
3	2.2500	.6250	2.2500	-.388211	4.789095	.839772	-1.433745
4	2.7500	.8750	2.7500	-1.018488	5.025736	.879823	-1.201784
5	2.0000	.2500	2.0000	.058631	.390236	.057228	-.120612
6	2.2165	-.1250	2.2165	1.553184	-1.900348	-.770876	.372335
7	2.4330	-.5000	2.4330	1.180028	-1.102372	-.529388	.161999
8	2.2165	-.8750	2.2165	1.059673	-.652429	-.406137	.006000
9	1.7835	-.8750	1.7835	1.064442	-.741155	-.424095	.023140
10	1.5670	-.5000	1.5670	1.223372	-1.439368	-.595299	.233967
11	1.7835	-.1250	1.7835	1.565332	-2.341274	-.845551	.483596
12	.2165	.8750	.2165	.783484	.346706	-.358302	-.331166
13	.6495	.6250	.6495	.582820	.629106	-.229887	-.402425
14	.8660	.2500	.8660	.304947	-1.615276	-.291822	.595061
15	.8660	-.2500	.8660	.120629	-1.262554	-.198148	.486331
16	.6495	-.6250	.6495	.002506	-.826941	-.122146	.306835
17	.2165	-.8750	.2165	-.043937	-.656966	-.087388	.244457

```
*************************
*                       *
*        BODY           *
*  SECTIONAL DERIVATIVES *
*                       *
*************************
```

MODE NO 3

BODY NO.	Y	Z	YOS	LIFT COEFFICIENT REAL	LIFT COEFFICIENT IMAG	MOMENT COEFFICIENT REAL	MOMENT COEFFICIENT IMAG
1	2.0000	-.5000	2.0000	-.066323	-.000000	.028449	.054454
2	2.0000	-.5000	2.0000	-.265290	-.000000	.113795	.217817
3	0.0000	0.0000	0.0000	0.000000	0.000000	0.000000	0.000000

```
*************************
*                       *
*   TOTAL DERIVATIVES   *
*                       *
*************************
```

CZ = FORCE COEFFICIENT IN Z DIRECTION

```
CY  = FORCE COEFFICIENT IN Y DIRECTION
CM  = PITCHING MOMENT COEFFICIENT
CN  = YAWING   MOMENT COEFFICIENT
CLI = ROLLING MOMENT COEFFICIENT

                  REAL          IMAG                          REAL          IMAG


  CZ =        -.270694       2.097864        CY =        .328035       -.851183
  CM =         .797593      -3.840494        CN =       0.000000       0.000000
  CL(ROLL) =  0.000000       0.000000

*****************************
*                           *
* GENERALIZED AIRFORCES     *
*                           *
*****************************


   PRESSURE MODE     DEFLECTION MODE          GENERALIZED FORCES

                                              REAL              IMAGINARY

          3                  1            .17319162E+01    -.13423398E+02
          3                  2            .76548145E+01    -.36859697E+02
          3                  3            .68213889E+01    -.24130962E+02


(SQUIT
```

REFERENCES

1. Miller, R. D.; Kroll, R. I.; and Clemmons, R. E.: Dynamic Loads Analysis System (DYLOFLEX) Summary. NASA CR-2846-1, 1979.

2. Miller, R. D.; Richard, M.; and Rogers, J. T.: Feasibility of Implementing Unsteady Aerodynamics into the FLEXSTAB Computer Program System. NASA CR-132530, October 1974.

3. Giesing, J. P.; Kalman, T. P.; and Rodden, W. P.: Subsonic Unsteady Aerodynamics for General Configurations; Part I, Direct Application of the Nonplanar Doublet Lattice Method. AFFDL-TR-71-5, 1971.

4. Kroll, R. I.; and Hirayama, M. Y.: Modal Interpolation Program, L215 (INTERP) Volume I: Engineering and Usage. NASA CR-2847, 1979.

5. Kroll, R. I.; and Clemmons, R. E.: A Computer Program to Generate Equations of Motion Matrices, L217 (EOM) Volume I: Engineering and Usage. NASA CR-2851, 1979.

1. Report No.	2. Government Accession No.	3. Recipient's Catalog No.
NASA CR-2849		

4. Title and Subtitle	5. Report Date
A PROGRAM TO COMPUTE THREE- DIMENSIONAL SUBSONIC UNSTEADY AERODYNAMIC CHARACTERISTICS USING THE DOUBLET LATTICE METHOD, L216 (DUBFLX) VOL. I: ENGINEERING AND USAGE	October 1979
	6. Performing Organization Code
	8. Performing Organization Report No. D6-44458
7. Author(s) M. Richard and B. A. Harrison	10. Work Unit No.
9. Performing Organization Name and Address Boeing Commercial Airplane Company P.O. Box 3707 Seattle, Washington 98124	11. Contract or Grant No. NAS1-13918
12. Sponsoring Agency Name and Address National Aeronautics and Space Administration Washington, DC 20546	13. Type of Report and Period Covered May 1975 to May 1977
	14. Sponsoring Agency Code

15. Supplementary Notes

Langley Technical Monitors: Robert C. Goetz and Boyd Perry III

Topical Report

16. Abstract

This document contains a description of the information necessary for execution of the digital computer program L216 (DUBFLX) on the CDC 6600. L216 has the capability to compute subsonic unsteady aerodynamic characteristics based on the doublet lattice method.

Arbitrary aerodynamic configurations may be represented with combinations of nonplanar lifting surfaces composed of finite constant pressure panel elements, and axially symmetric slender bodies composed of constant pressure line elements.

Program input consists of configuration geometry, aerodynamic parameters, and modal data; output includes element geometry, pressure difference distributions, integrated aerodynamic coefficients, stability derivatives, generalized aerodynamic forces, and aerodynamic influence coefficient matrices. Optionally, modal data may be input on magnetic file (tape or disk), and certain geometric and aerodynamic output may be saved for subsequent use.

Documentation consists of two parts: *Volume I, Engineering and Usage; Volume II, System Design and Maintenance.*

17. Key Words (Suggested by Author(s))	18. Distribution Statement
Aerodynamic influence coefficients Unsteady aerodynamics Doublet lattice method Lifting surface Slender body	Unclassified - Unlimited Subject Category 02

19. Security Classif. (of this report)	20. Security Classif. (of this page)	21. No. of Pages	22. Price*
Unclassified	Unclassified	122	$6.50

*For sale by the National Technical Information Service, Springfield, Virginia 22151

NASA-Langley, 1979