NASA Contractor Report 3197

Combustion of Porous Solids at Reduced Gravitational Conditions

A. L. Berlad and J. Killory

GRANT NSG-3051
OCTOBER 1979

NASA

NASA Contractor Report 3197

Combustion of Porous Solids at Reduced Gravitational Conditions

A. L. Berlad and J. Killory
State University of New York at Stony Brook
Long Island, New York

Prepared for
Lewis Research Center
under Grant NSG-3051

National Aeronautics
and Space Administration

Scientific and Technical
Information Branch

1979

Table of Contents

		Page
I.	Introduction and Background	1
II.	Flame Propagation and Extinction	5
III.	A Space Shuttle Lab Experiment for Determination of Flame Propagation and Extinction Conditions for Uniform, Steady Clouds of Porous Particulates	9
IV.	Exploratory Drop Tower Studies of the Combustion of Clouds of Porous Particulates--Conducted at the Lewis Research Center Zero-g Facility	11
V.	Feasibility Issues, Revisited	17
VI.	Conceptual Design, Revisited	20
VII.	Figures	22
VIII.	References	33
IX.	Appendices	
	A. Combustion of Particulate Clouds at Reduced Gravitational Conditions by A. L. Berlad and J. Killory	37
	B. Gravitational Effects on Combustion by A. L. Berlad	81
	C. Fluid and Combustion Dynamics by A. L. Berlad	103

(I). INTRODUCTION AND BACKGROUND

The combustion of particulate clouds of porous fuels with an oxidizing atmosphere embraces a broad class of combustible systems of fundamental and applied importance. Examples of such systems include numerous energy conversion devices. Important combustible-handling devices in mining, milling, storage and transport systems are common. Nevertheless, an understanding of the underlying combustion dynamics of such combustible systems has been inhibited by the necessary deficiencies[1,2] of combustion experiments carried out at normal gravitational conditions (g = 1).

Interpretation of flame propagation and extinction observations for clouds of large particles (e.g. 100 microns at g = 1) is complicated by the fact that uniform, quiescent clouds are not achievable. These (g = 1) experimental difficulties are necessary derivatives of the facts that

(a) fundamental flame propagation and extinction data are required to satisfy the conditions
   - (i) the concentrations of the unburned fuel and oxidizer be uniform in space and time, for the period of experimentation[1,3-6]
   - (ii) the transport processes characterizing the unburned mixture be uniform[3-6] in space and time, for the period of experimentation
   - (iii) the characteristic concentrations and transport properties of the unburned mixture be known--as requirements for theoretical interpretation of observations.[1-6]

(b) the above requirements have not been achieved (at g = 1) due to the facts that

(i) uniform premixing of clouds of particulates is generally achieved through vigorous mixing which induces large local particle-gas velocity differences[1,3-7]

(ii) the times required for the decay of mixing induced turbulence are sufficiently long to enable gravitational settling to destroy the (initially) established uniform particle density.[3-7]

Resolution of these (g = 1) difficulties has not been possible. Understanding of observed (g = 1) combustion processes is further complicated by flame induced natural convective energy and mass transport processes. These (further) act to obscure or transform the underlying (g = 0) phenomena. Thus, g = 1 combustion theory is confronted with the crushing burden of representing the ill-defined initial conditions of the unburned mixture as well as the free-convectively-influenced (or dominated) combustion process.

Research in this area of combustion has suffered from these difficulties. So-called "complete" combustion theories have proved intractable at g = 1--in part due to the impossibility of their application to ill-defined experimental conditions <u>and</u> in part due to the complexities of the free-convectively-influenced combustion processes.[1-6]

The investigation reported on herein is motivated by the need for fundamental flame propagation and extinction data for clouds of quiescent, uniform, steady unburned particulates which

are not complicated by gravitational settling, mixing induced turbulence, or free-convectively influenced flame propagation and extinction. For sustained g = 0 conditions, these sought-after experimental conditions are achievable.[3-6] Given data derived from experimentation in a virtually gravity-free earth-orbiting laboratory, flame propagation rates and extinction conditions for quiescent, uniform clouds of large (or small, or a mixture of various sized) particulates may be obtained. Given such data, corresponding flame propagation and extinction theory is tractable (natural convection absent) and can be made highly representative of the experimental observations.

The need for understanding at (g = 1) implies the need for understanding of the underlying g = 0 phenomena.[1,5,6] It is also found that the experimental conditions required for reliable g = 0 data cannot be adequately met by the short experimental time periods available in drop towers and other short-duration, earth-bound g = 0 test facilities.

Also, it has been an objective of this investigation to develop the design concepts and experimental approaches necessary to the carrying out of Space Shuttle based g = 0 experiments. To the extent possible, g = 1 and drop tower (g = 0) experiments have been employed to support the development of and to test elements of the design concepts, equipment and procedures under consideration.

It has been found that

(a) fundamental flame propagation and extinction data for premixed clouds of porous particulates can be obtained at $g = 0$ and that these important data can be expected to be free of mixing, turbulence decay, gravitational settling and natural convection phenomena,

(b) for large-sized (or mixed sizes of) particulates, Space-Shuttle based laboratory conditions are necessary,

(c) theoretical interpretation of these anticipated data are expected to be tractable, and can then serve as fundamental bases for future understanding of more complex $g > 0$ combustion processes.

(II) FLAME PROPAGATION AND EXTINCTION

Premixed combustible systems capable of supporting freely propagating, quasi-steady flame propagation must display a number of well-defined characteristics.[3-5] This is so for uniform clouds of vaporizable fuel particulates as well as for premixed gaseous systems.[3-5]

Experimental constraints to be satisfied include

(a) well-defined boundary conditions (e.g., size, shape and temperature of boundaries),

(b) a uniform mixture of unburned fuel and oxidizer of known concentrations,

(c) quiescent conditions of the unburned regime, thereby permitting characteriziation of the operative transport properties.

Theoretical analyses based on the assumption of steady state flame propagation processes are invalid if the above experimental constraints are not met. The phenomenon of "flame extinction" denotes a set of critical experimental conditions which separate operational regimes wherein steady state flame propagation <u>is</u> possible from operational regimes within which steady state flame propagation <u>is not</u> possible. Where the above experimental constraints are not met, quasi-steady flame extinction theory lacks correspondence to experimental reality. Additionally, where gravity-induced body forces are significant factors in experimentally observed flame propagation and extinction, combustion theory is required to account for these[1-3,8-10] effects.

It has been shown[3,4] that for clouds of large particles (e.g. 100 microns) experimental flame propagation studies at normal gravitational conditions (g = 1) are unable to meet all of the above noted experimental constraints. Thus, g = 1 combustion experiment and theory is presented with a situation wherein

(a) quiescent, uniform particulate clouds are not experimentally available,

(b) freely-propagating flames are subject to the experimental deficiencies

  (1) flame propagation is unsteady and influenced by

    (i) mixing-induced turbulence and turbulence decay

    (ii) gravitational settling

    (iii) free convection

(c) theory is inadequate.

The aforementioned theoretical and experimental difficulties are encountered for freely propagating flames. Freely propagating, quasi-steady flames have unique[8] temperature and composition structures as well as characteristic flame speeds. It is for this reason that these properties are frequently sought for the test of proposed theory or for experimental characterization of a combustible system.[8,11,12]

Quite unlike the case of freely propagating flames in tubes, premixed flames stabilized on burners display a range of observed quasi-steady burning velocities. Their extinction conditions represent the limits of this range.[8,13] In fact, it has been shown that this range can be arbitrarily extended or shrunk by appropriate variations in hot or cold boundary conditions imposed on the flow.[14] There exist a number of very fine g = 1 experimental

studies of particulate cloud flames stabilized on burners.[15-18] The schematics of one such[18] experimental arrangement is shown in Figure (1). Experimental results obtained are characterized by quasi-steady state flame propagation and extinction. Some results obtained by this technique are shown in Figure (2). The authors of this work[15,16,18] assume that

(1) molecular conduction and diffusion processes are the dominant transport processes,
(2) natural convection processes are unimportant,
(3) particle-gas velocity differences are insignificant and/or unimportant,
(4) small particles dominante the propagation characteristics for mixed particle size clouds,
(5) reaction zone is adiabatic,
(6) radiative effects are significant in the preheat and postreaction zones.

It is clear from previous studies[8,11,13,14] that stabilized, quasi-steady flames are nonadiabatic, are easier to stabilize in upward propagation than in downward propagation, are characterized (at g = 1) by "effective" particle concentrations rather than the actual particle concentrations, that "upward" and "downward" flame propagation rates and extinction conditions may differ, that free convection generally is operative, that particle-gas velocity differences do exist and vary with particle size and conditions of flow--and that observed burning velocity and extinction data do not have the same meaning as would those for the "ideal" required for freely propagating flames in tubes subject to no settling or free-convective processes.

Flame theoretical constructs applicable to freely propagating flames uninfluenced by gravity are couched in classically derived two-phase conservation equations coupled to the appropriate boundary conditions.[3-6,15,16] Their full application awaits the observation of data which appear accessible only from Space Shuttle experimentation.

(III) A SPACE LAB EXPERIMENT FOR DETERMINATION OF FLAME PROPAGATION AND EXTINCTION CONDITIONS FOR UNIFORM, STEADY CLOUDS OF POROUS PARTICULATES.

In previous expositions,[3-5] as well as earlier in this report, we have examined the important questions regarding the fundamental worth of the experimental observations being sought, the reasons why these observations are required to be made at $g = 0$, and the reasons why these $g = 0$ observations are required to be made in a space laboratory.

A schematic of the proposed experimental apparatus is shown in figure (3). It is intended that

(1) a known, predetermined combination of particulate fuel and gaseous oxidizer will be sealed in a flammability tube such as that shown in Figure (3). The usual properties of flammability tubes would be incorporated in the experimental apparatus--including provisions for high speed motion picture observation and fine thermocouple probing of temperature fields. A double bellows arrangement provides[3,4] (at $g = 0$) constant pressure-constant volume, gentle dispersion and mixing of the cloud of particulates. A successfully tested version of a mixing apparatus is shown in Figure (4).

(2) Provision is to be made for easy disconnect of the flammability tube thereby permitting its replacement with a freshly charged tube after each experimental run.

(3) Observations to be made include flame propagation speed and shape as well as extinction limits.

(4) Ground-based supportive efforts are required to assist in the wise utilization of these observations. Such

efforts include

(a) a detailed study of the wall-saturation effects for the particular tubes and for the selected particulates of interest.[3,4]

(b) pyrolysis-vaporization kinetics of the particulates under study have to be established. These, as well as oxidation kinetics are required for utilization in the application of flame propagation and extinction theory to these observations.[3-6,15,16]

(c) thermophysical properties are generally required and are available.

It is particularly interesting to note that Space Lab experiments permit the study of uniform multicomponent particulate clouds (various sizes and compositions of particulates). No other approach provides quiescent, multicomponent particulate clouds, uniform in space and time--to be examined for flame propagation and extinction characteristics, unperturbed by natural convective phenomena.[3,4]

Feasibility issues raised in earlier reports[3] have been discussed previously. Some aspects of these issues have been further studied with the aid of the Lewis Research Center zero-g (drop tower) facility. Observations and deducations are reported in the next section.

(IV) EXPLORATORY DROP TOWER STUDIES OF THE COMBUSTION OF CLOUDS OF POROUS PARTICULATES--CONDUCTED AT THE LEWIS RESEARCH CENTER ZERO-g FACILITY.

For the full range of particle sizes and densities of interest to this investigation, Space Lab combustion studies are necessary.[3] It was thought that for very small particles (low settling velocities at $g = 1$) drop tower studies could provide a cloud of particles which is approximately uniform in space, nonturbulent, and free of natural convective effects. However, $g = 0$ drop tower studies of clouds of particulates <u>does</u> require $g = 1$ mixing in order to properly disperse the particulate cloud, prior to $g = 0$ ignition of the system under (some 2 seconds of) study.[3]

Accordingly, a special apparatus was constructed for the exploratory drop tower study of small, quiescent particulates. A schematic of this apparatus is shown in Figure (5).

The preexperimental and experimental procedure is outlined below.

(a) a flammability tube and particle cloud of known properties (particle size, type and density, wall saturation effects known) is employed. These properties are determined at $g = 1$, prior to experimentation.

(b) A known mass of particulates is placed on a wire cloth and, at $g = 1$, an upward flow of air is put through the flammability tube. The flow rate is slightly higher than the known settling velocity

of the particulates and, over a matter of some 10 seconds, an approximately uniform cloud of particulates is established (at g = 1). In these exploratory studies, lycopodium powder (30 micron particulates) were employed. The sequence employed in the drop tower is indicated below

g	time (secs)	operation
1	-10.5	initiate upward flow to disperse particulates
1	-5.0	start camera and clock
1	-1.0	stop flow. close top valves.
1	0.0	initiate "wire cut" for drop. open solenoids to exhaust plenum.
0	0.3	free fall
0	0.65	ignition "ON"
0	1.15	ignition "OFF"

Observation of flame propagation through these clouds of lycopodium particles has led to several important observations and demonstrations

(a) quasi-steady flame propagation has been demonstrated at both (g = 1) and at (g = 0),

(b) flame propagation rates at (g = 0) are substantially lower than corresponding <u>upward</u> flame propagation rates at g = 1.

For both (g = 1) and for (g = 0) observations, flame propagation rates are deducible directly from a frame by frame examination of the flame's spatial position as a function of time.

Figure (6) gives the flame front's spatial displacement as a function of time for a lycopodium cloud-in-air flame, observed at $g = 1$. Figure (7) gives similar experimental data at $g = 1$. There is a difference in experimental conditions for these two sets of observations. Figure (6) data were obtained for a flammability tube whose inside wall surfaces are "clean" (not initially covered with any particulates). Figure (7) data were obtained for a flammability tube whose inside wall surfaces are "saturated" (initially covered with the full amount of particulates that can be held in a $g = 1$ field).[3,4] Necessarily, the $g = 1$ experiments do not achieve the uniformity and stability of dispersion which is anticipated for Space Laboratory conditions. Nevertheless, for these small particles, the $g = 1$ data are instructive. Steady states are achieved and the flame propagation speed is controlled by the cloud characteristics and not by the wall-bound particulates. The quasi-steady flame propagation velocity observed at $g = 1$ (measured far from the ignition zone), for a concentration of 130 mg per liter, is 17.0 cm/sec. Flame propagation is upward.

Similar experiments performed at $g = 0$ (employing the Lewis Research Center's Drop Tower Facility) yield strikingly lower flame propagation velocities of 11.4 cm/sec.

It is significant to note that the effective concentration (c_0^*) of particulates in a ($g = 1$) cloud is not the same as the actual concentration (c_o) of particulates. For an upward propagating flame, at $g = 1$, $c_0^* > c_0$, reflecting the fact that a finite rate

flame propagation, upward at $g = 1$, consumes all particulates in a lesser volume than that used to specify c_0. During the time of propagation through the total volume, the local concentration c_0 has been effectively enriched by the settling process. A measure of this enrichment factor is given by (u_s/u_f), where u_s is the settling velocity and u_f is the propagation velocity. Similarly, for downward propagation at $g = 1$, there is an effective depletion of the (c_0) value by the same factor.

In general, for a single-size class of particles:

$$c_0^* \cong c_0\left(1 \pm \frac{u_s}{u_f}\right) \tag{1}$$

For a mixture of particle sizes, one obtains

$$c_i^* \cong c_{0,i}\left(1 \pm \frac{u_{s,i}}{u_f}\right) \tag{2}$$

where $(\pm)$ refers to upward or downward propagation, respectively, and the subscript (i) refers to the size class of the multicomponent cloud. Examination of equations (1) and (2) shows that (for $g = 1$):

(a) near extinction limits u_f may become very small and the "effective concentrations" for upward and downward propagation may differ markedly from each other and from (c_0).

(b) for large particles, u_s may be very large and the "effective concentrations" for upward and downward propagation may differ markedly from each other and from (c_0).

(c) for a mixture of particle sizes and types the total effective concentration $c^* = \sum c_i^*$ is associated with a discrete spectrum of particle velocities and

associated "effective concentrations".

The data presented in figures 6-9 for upward flame propagation through lycopodium-air clouds are summarized below:

Parameter	g = 0	g = 1
u_f (cm/sec)	11.4	17.0
c_0 (mg/ℓ)	130	130
c_0^* (mg/ℓ)	130	149

The NASA-SUNY results for lycopodium are compared with previous observations:

Observers	Flame Type	(g)	c_0	c_0^*	u_f
		-	mg/ℓ	mg/ℓ	cm/sec
Mason & Wilson[17]	Stabilized. Downward Propagation	1	∿193	∿156	∿13
Kalsche-Krisher & Zehr[19]	Stabilized. Downward Propagation	1	200-400	$\sim(0.9)c_0$	∿26
This study	Freely propagating upward	1	130	149	17
		0	130	130	11

These drop tower studies show a number of substantial differences between g = 1 and g = 0 flame propagation through clouds of lycopodium. For upward flame propagation, g = 1 flame speeds are greater, flame

shapes are more curved, and flame structure appears less stable than the corresponding characteristics for g = 0 propagation.

We may now tabulate some important elements of distinction among the lycopodium cloud flame observations

	g = 1	g = 0
Post-reaction Zone Disturbance	substantial	small
Post-reaction Zone Luminosity	greater	smaller
Particle Settling Effects after Ignition	yes	no
Particle Settling Effects before Ignition	small	small
Free Convective Heat Transfer Processes Operative	yes	no
Preservation of Initial Cloud Concentration During Experiment	no	yes
Observed Flame Propagation Rate for c_0 = 130 mg/ℓ	17	11

Differences between the observed g = 1 and g = 0 flame propagation are apparent from the photographic recordings. The g = 0 flames are less luminous, almost free of flame front curvature, slower, with far less disturbed wake structures. The principle features of these differences are seen in the comparison shown in Figure (10). Extensive generalizations are not warranted, however, due to the limited range of experimental conditions accessible through these drop tower studies.

(V) FEASIBILITY ISSUES, REVISITED

The ground based program previously reported[3,4] dealt with the resolution of several "feasibility issues". It is useful to summarize the implications of the results reported herein on these feasibility issues. Employing the identifying paragraph numbers of reference (3):

[D.2.1] - Particle Concentration Determination:

(a) Prepackaged particulates. The mass of fuel particulates employed in a given Space Lab experiment is determinable by ground-based prepackaging and weighing experiments.

(b) Ground-based weighing of the prepackaged charge can be carried out with high precision and accuracy.

(c) The combustion tube volume is easily measured with high precision and accuracy.

(d) Ground-based predetermination of wall saturation effects can be achieved with high precision and accuracy.

[D.2.2] - Experimental Particle Uniformity:

(a) A twin bellows arrangement for uniform dispersing of the particle cloud was successfully fabricated and tested at $g = 1$. At $g = 1$ the arrangement is not suitable because of the highly turbulent mixing required to maintain particle "uniformity".

(b) In a Space Laboratory, long, gentle mixing times permit "particle uniformity" as well as a quiescent gas phase.

[D.2.3] - Gas Phase Composition:

(a) This can be determined on the ground for a sealed, ground-prepackaged, flame tube apparatus, or can be easily determined in the Space Laboratory.

[D.2.4] - Ignition System:

(a) A spark-gap ignition system was developed and operated successfully both at $g = 0$ and $g = 1$.

[D.2.5] - Flame Propagation and Extinction Observations:

(a) High speed photography works well and is suitable both at ($g = 0$) and at ($g = 1$).

(b) Thermocouple arrays are to be added to a Space Lab experimental system. Such arrays have not been found necessary for a steady state flame propagation rate determination.

[D.2.6] - Interpretation of Observations:

(a) Currently developed[3-5,15] flame theory (as well as developments in progress) are applicable and are expected to represent Space Lab observations with a fidelity that is not achievable in earth-bound laboratories. These theoretical structures employ sets of two-phase conservation equations.[3-5,15]

(b) Ground-based theoretical support of the Space Lab experimental studies will employ the most suitable kinetic data for gasification, pyrolysis and oxidation.

(c) Previous (truncated) theoretical studies have not considered all portions of a two-phase flame to be nonadiabatic. The ground-based theoretical effort in support of these Space Lab studies will employ a general nonadiabatic theoretical formulation.

[D.2.7] - LASER-Doppler Velocity Measurements:

(a) These observations are not planned for our initial Space Lab studies.

(b) Should suitable apparatus be available on Space Lab, and should we have a suitable cloud of particulates under study, subsequent use is possible.

(VI) CONCEPTUAL DESIGN, REVISITED

The elements of a "conceptual design" proposed for Space Lab are essentially as previously described.[3]

In addition to the items noted in previous sections of this report, the following design and operating features are to be included in a Space Lab experiment:

(1) Milliken DBM4A Camera, or equivalent, with Kodak Tri-X Reversal Film 7278 (100 ft. rolls).

(2) Fifteen Platinum/Platinum-Rhodium thermocouples (0.003 in. diam.).

(3) Twenty channel recording.

(4) Suitable electric leads for the mixing motor, igniter and other peripherals.

(5) g-values of the order of (5×10^{-4}) are acceptable.

(6) Data-taking for each experimental run is expected to last for 20 seconds

(7) The total time required for each experimental run is 300 seconds.

(8) The experimental run, including "spent flame tube replacement" is to be as follows:

   (a) After test, close valves and finish housekeeping operations.

   (b) Disconnect umbilicals.

   (c) Disconnect flame tube from plenum.

   (d) Stow "spent" tube.

   (e) Mount "fresh" tube.

   (f) Engage and check connections.

   (g) initiate gentle mixing of test section (flame tube) to establish a uniform cloud of particulates.

(h) perform, observe, and record the experimental test.

(i) after the completion of the test, repeat the sequence.

(VII) FIGURES

1. Schematic of Particle-Gas Burner of Horton, Goodson and Smoot.

2. Flame Velocities of Pocahantas Coal Dust-Air Flame. Horton, Goodson and Smoot.

3. Proposed Experimental Schematics.

4. Mixer Test Apparatus.

5. Schematic of Drop Tower Apparatus for Studies of The Combustion of Clouds of Porous Particulates.

6. Lycopodium Cloud Flame Propagation at g = 1. Clean Walls. Run (1).

7. Lycopodium Cloud Flame Propagation at g = 1. Saturated Walls. Run (2).

8. Lycopodium Cloud Flame Propagation at g = 0. Saturated Walls. Run (7).

9. Lycopodium Cloud Flame Propagation at g = 0. Saturated Walls. Run (11).

10. Comparison of g = 1 and g = 0 Upward Flame Propagation through a Lycopodium Cloud (Saturated Walls), c_0 = 130 mg/liter.

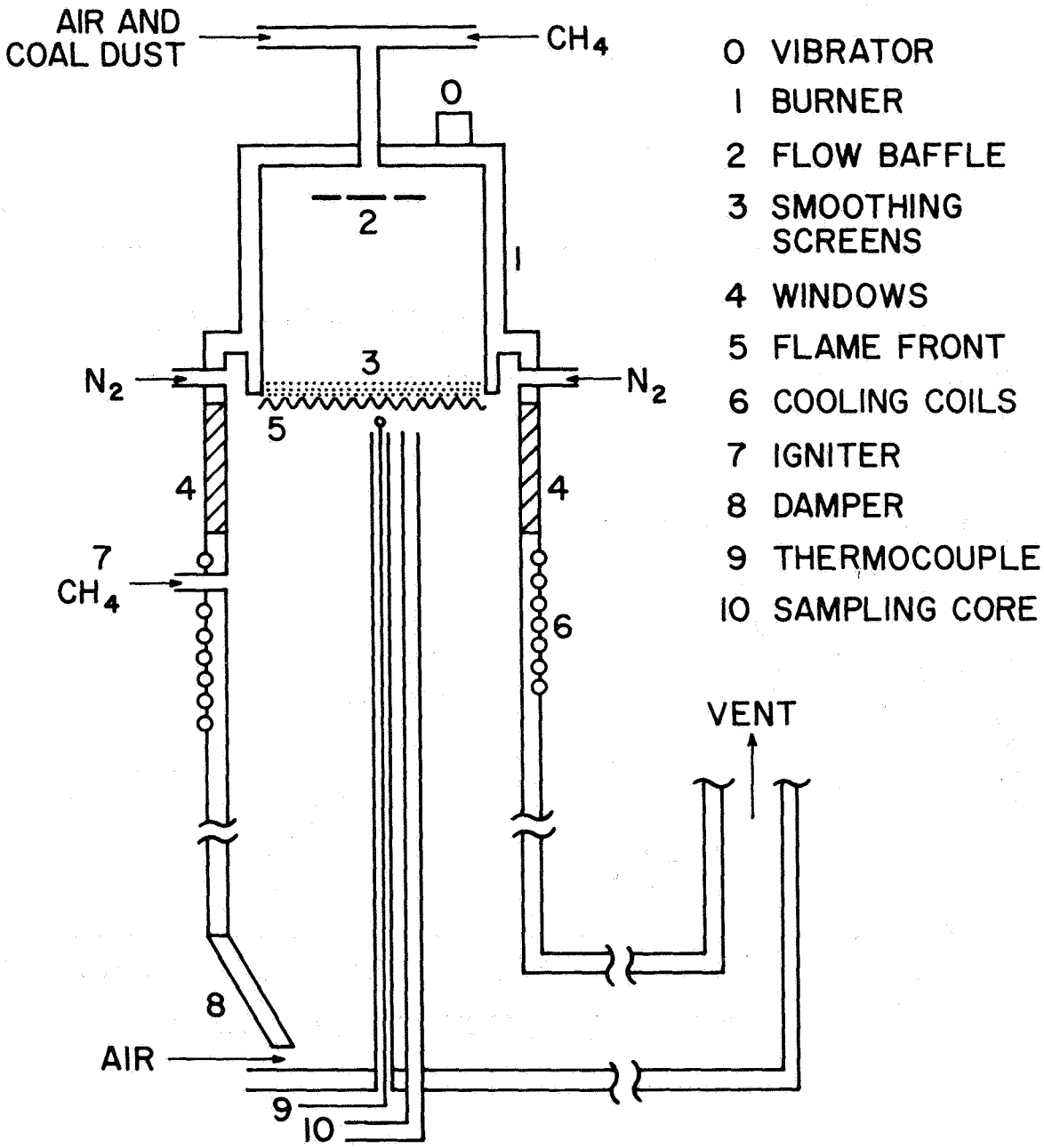

FIG. 1. SCHEMATIC OF PARTICLE-GAS BURNER OF HORTON, GOODSON AND SMOOT [C & F 28, 187 (1977)]

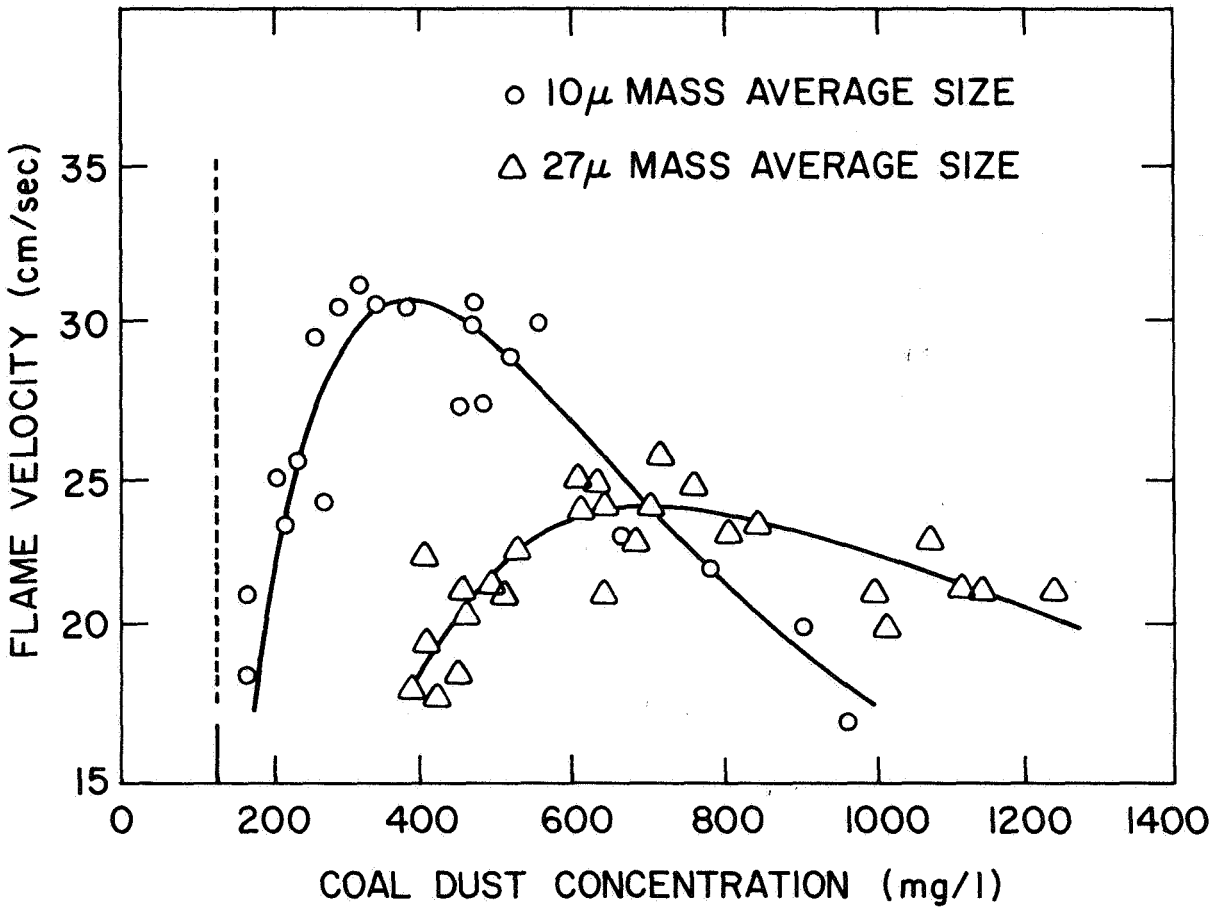

FIG. 2. FLAME VELOCITIES OF POCAHANTAS COAL DUST-AIR FLAME. DATA OF HORTON, GOODSON AND SMOOT [C & F 28, 187 (1977)]

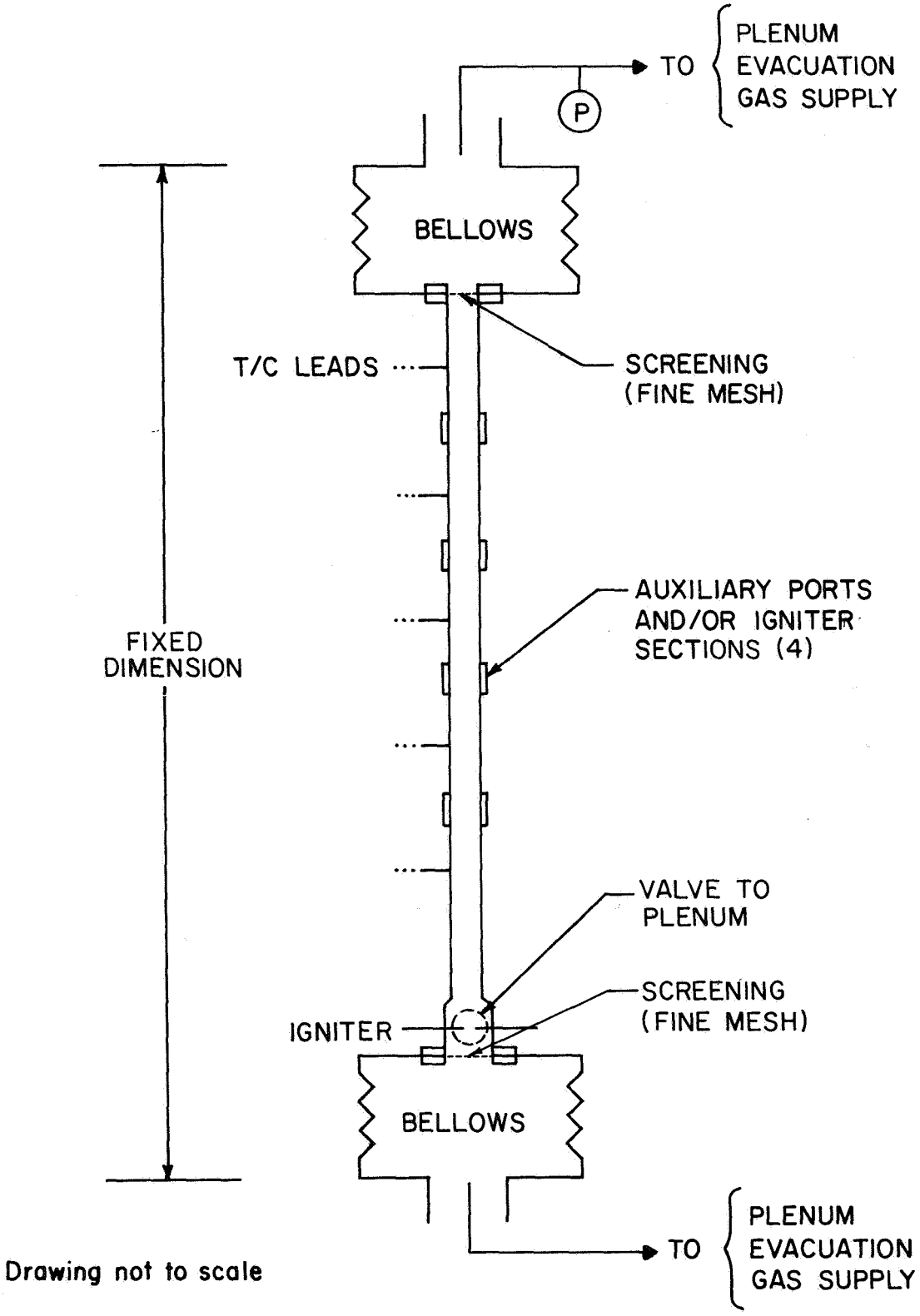

FIG. 3. PROPOSED EXPERIMENTAL SCHEMATICS

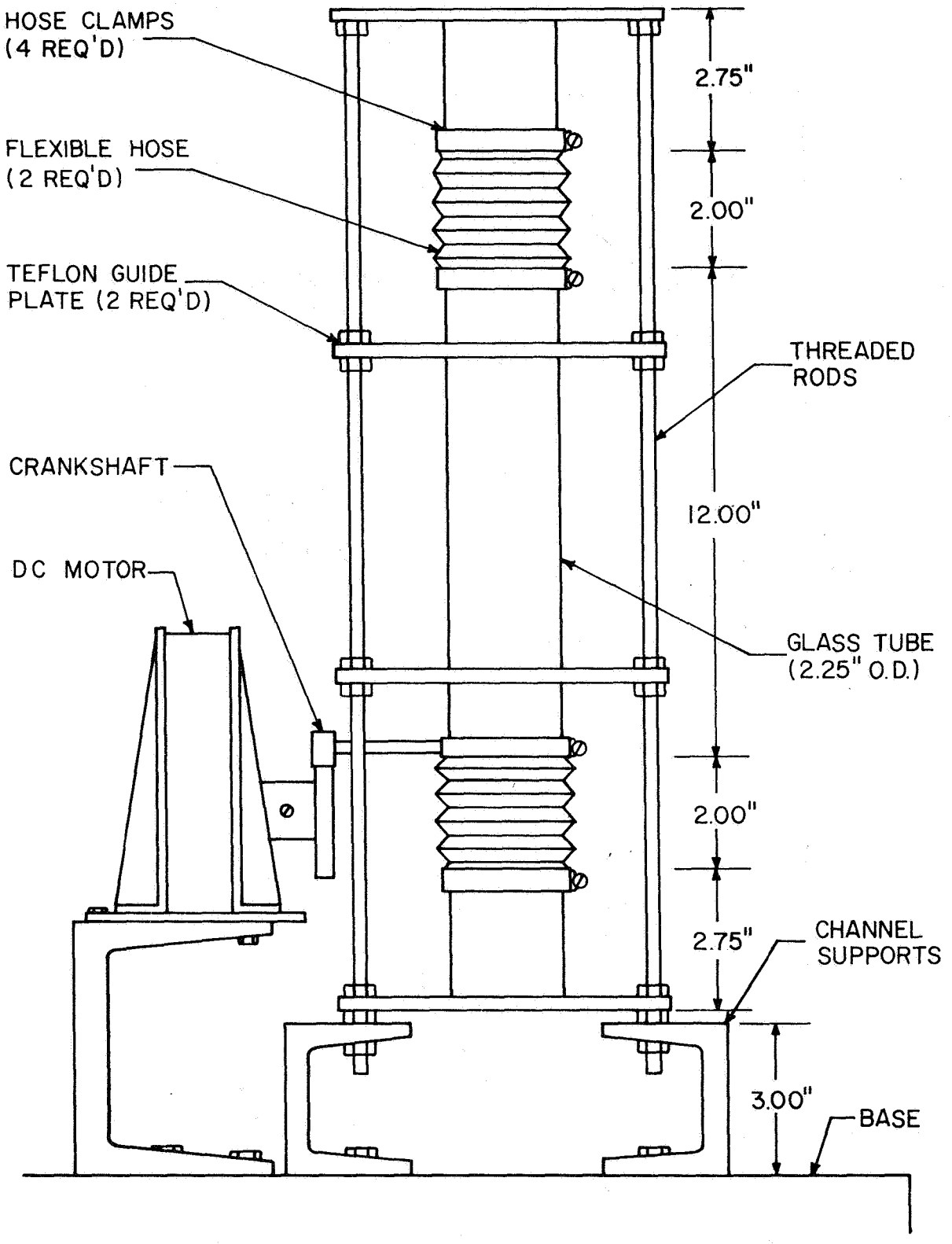

FIG. 4. MIXER TEST APPARATUS

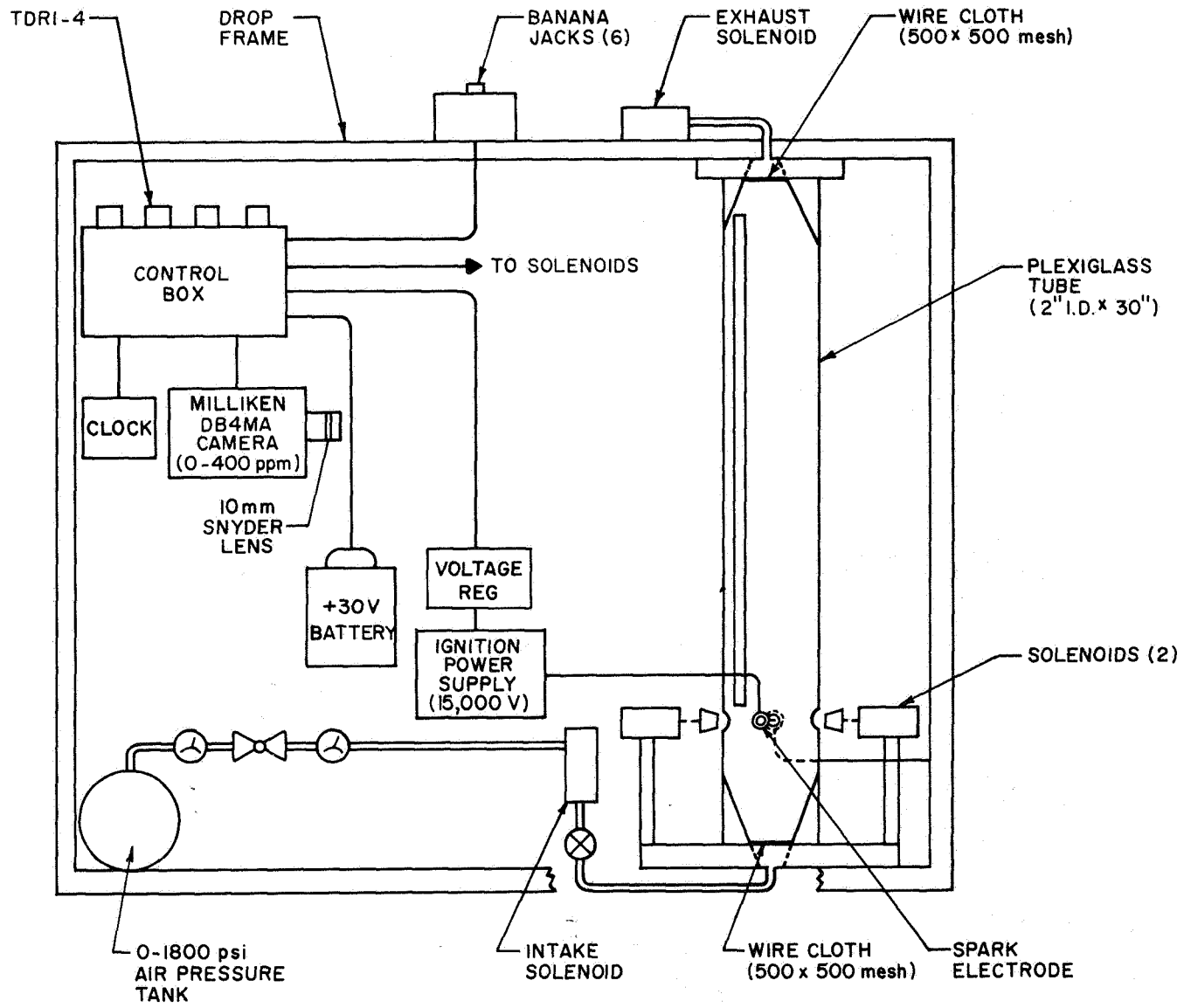

FIG. 5. SCHEMATICS OF NASA-SUNY DROP TOWER APPARATUS

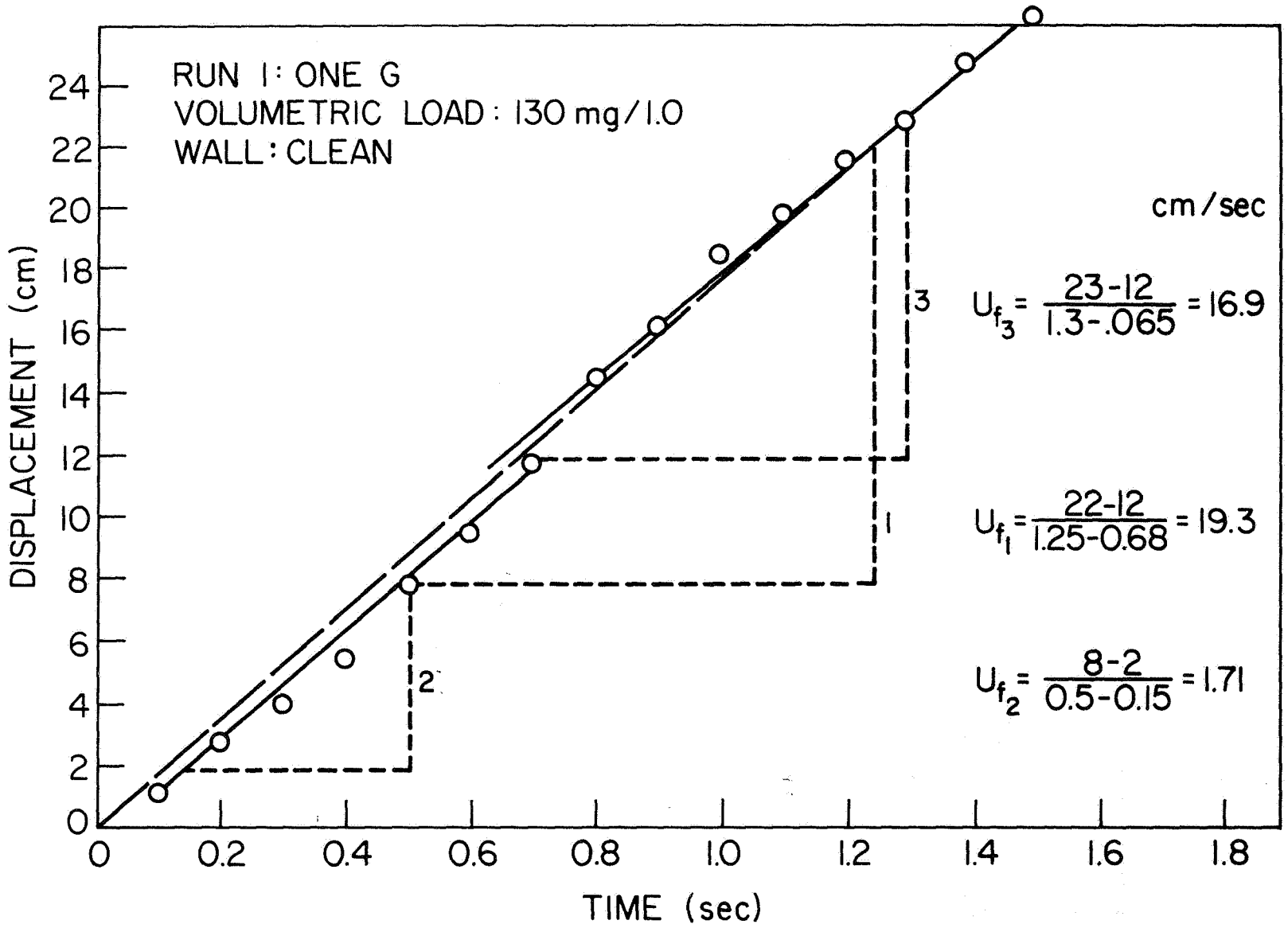

FIG. 6. LYCOPODIUM CLOUD FLAME PROPAGATION AT g = 1.

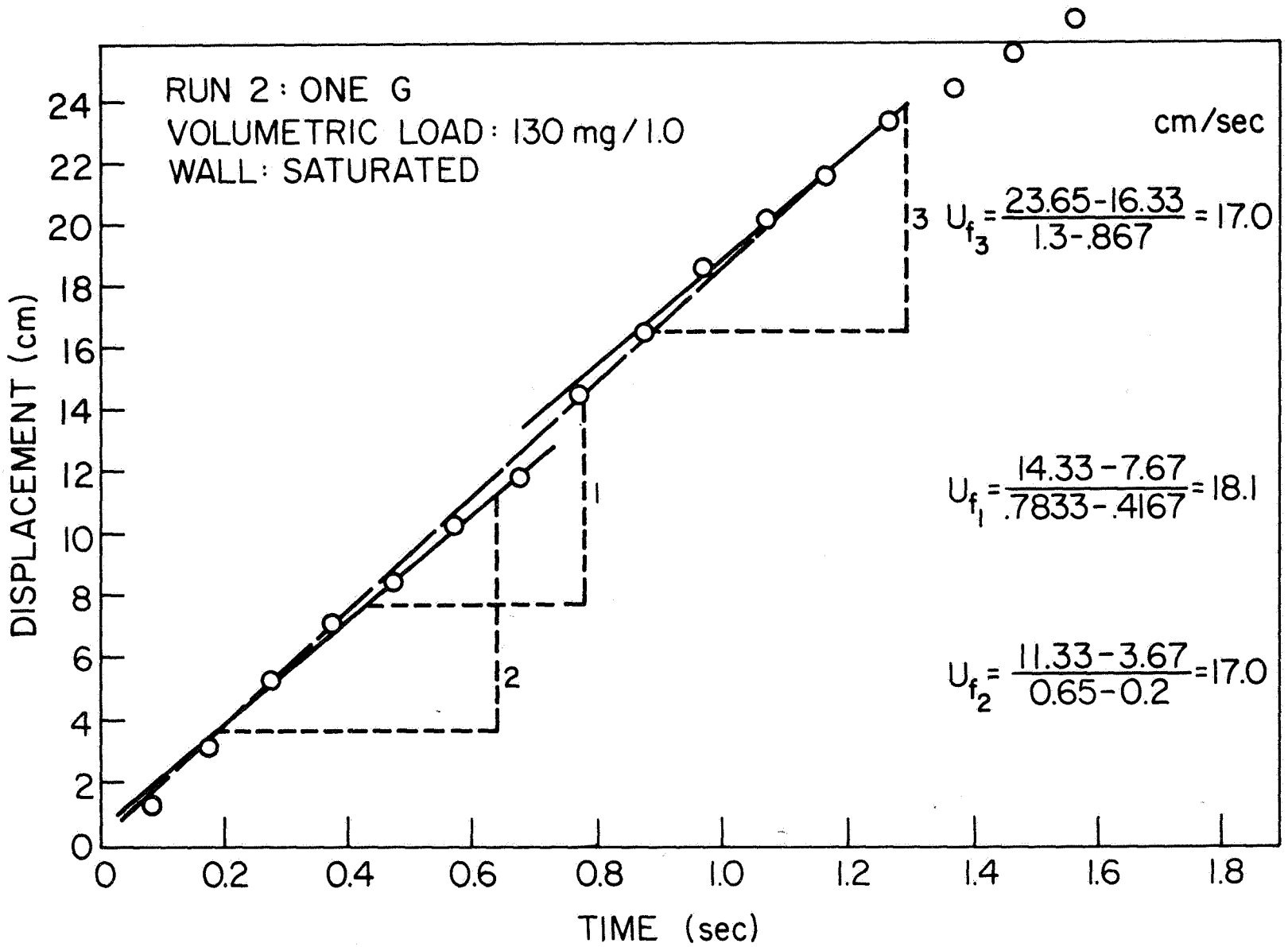

FIG. 7. LYCOPODIUM CLOUD FLAME PROPAGATION AT g = 1.

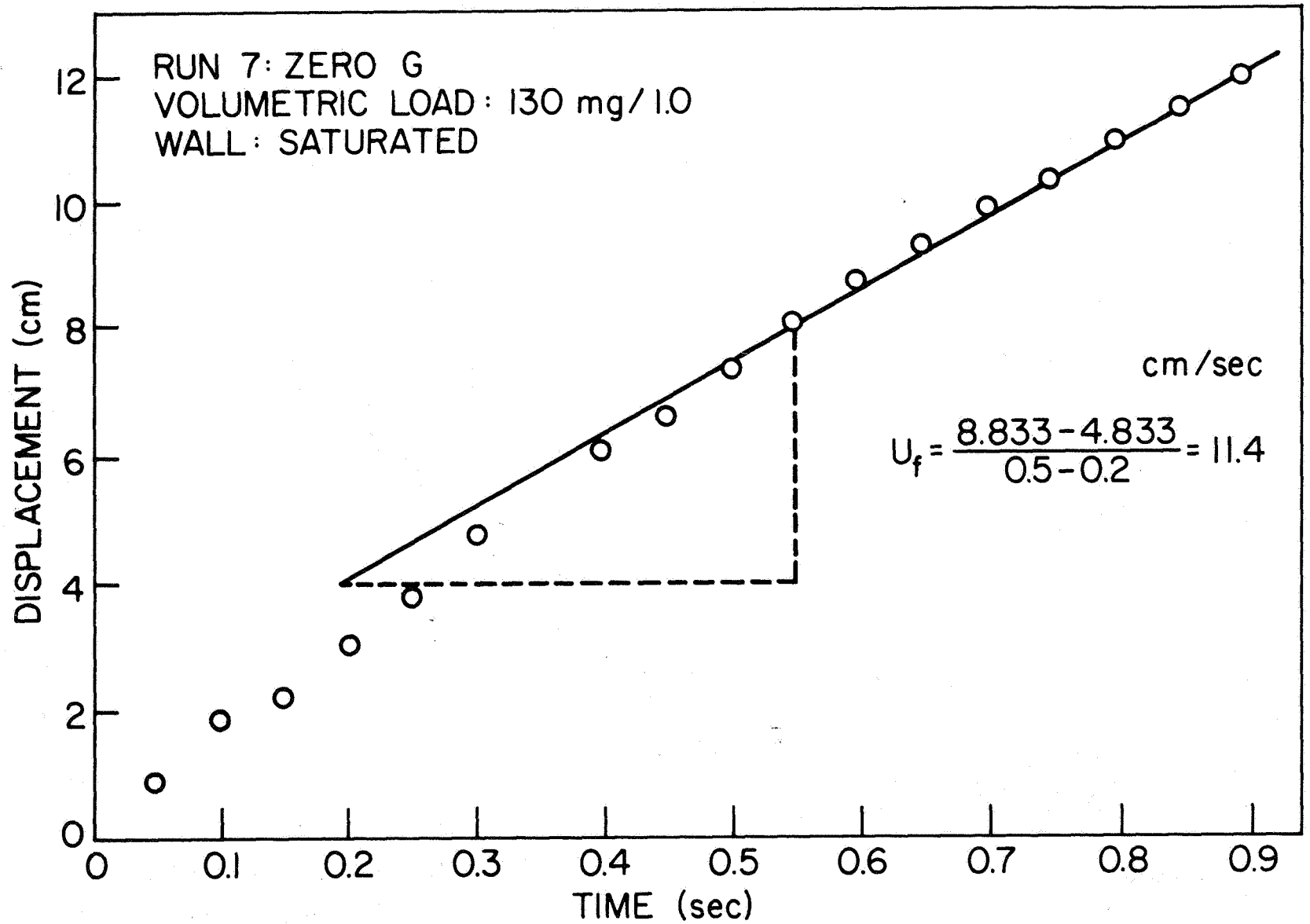

FIG. 8. LYCOPODIUM CLOUD FLAME PROPAGATION AT g = 0.

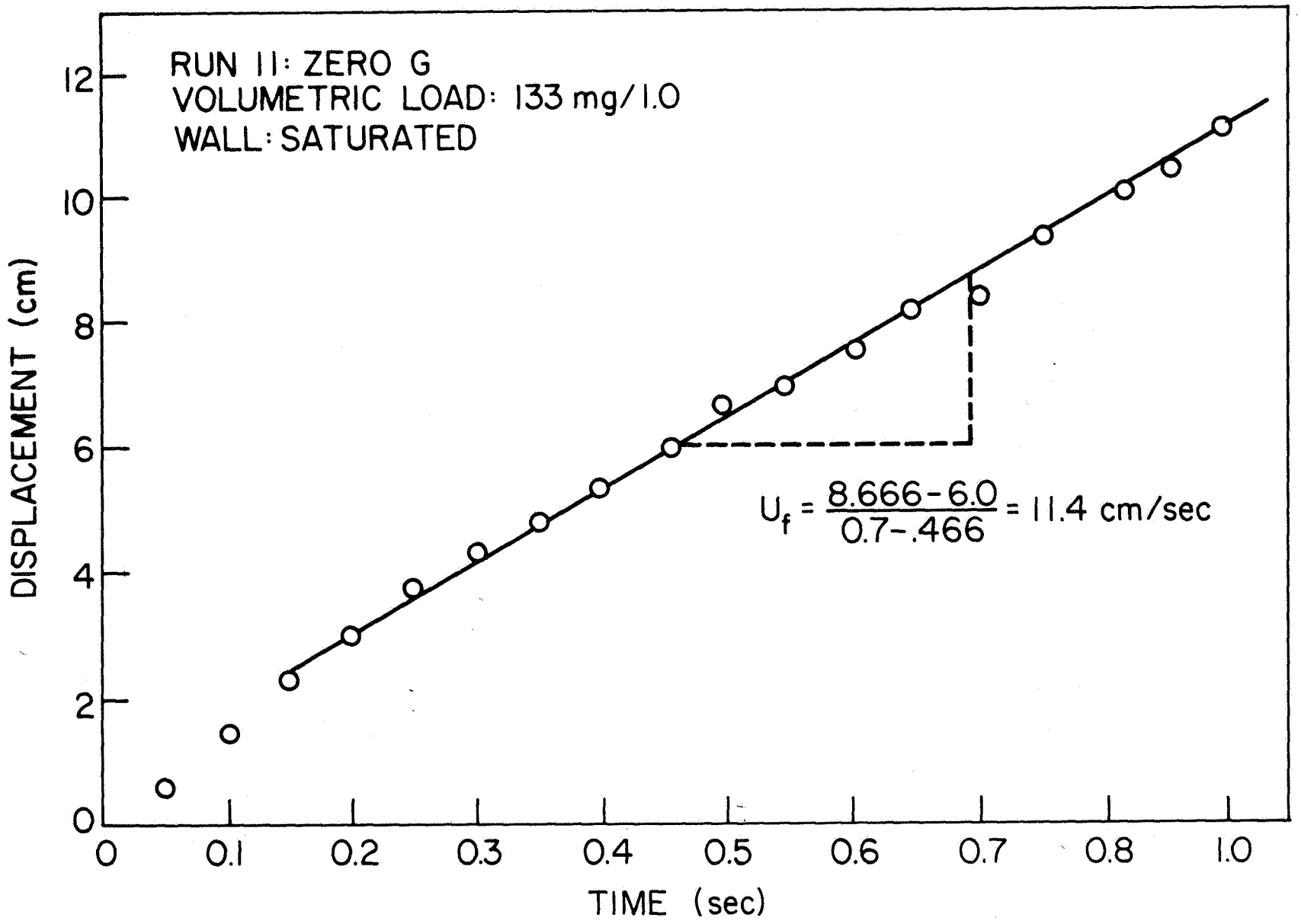

FIG. 9. LYCOPODIUM CLOUD FLAME PROPAGATION AT g = 0.

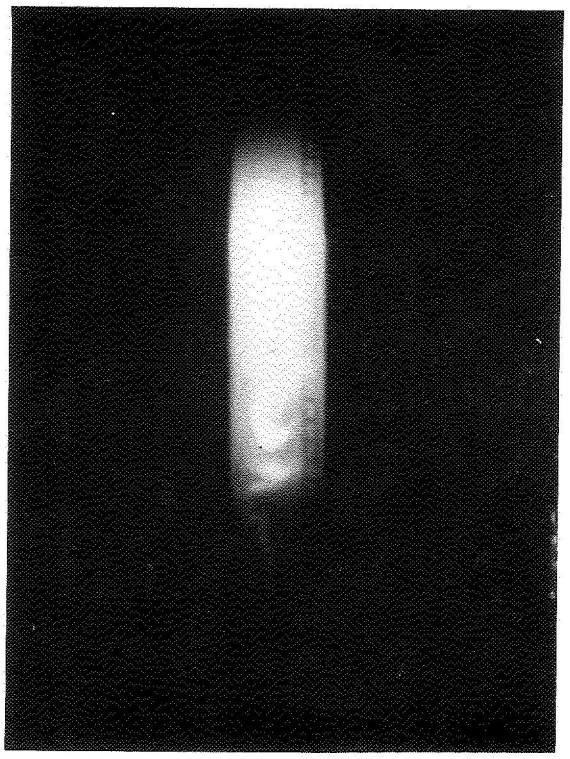

u_f = 17.0 cm/sec
(g = 1)

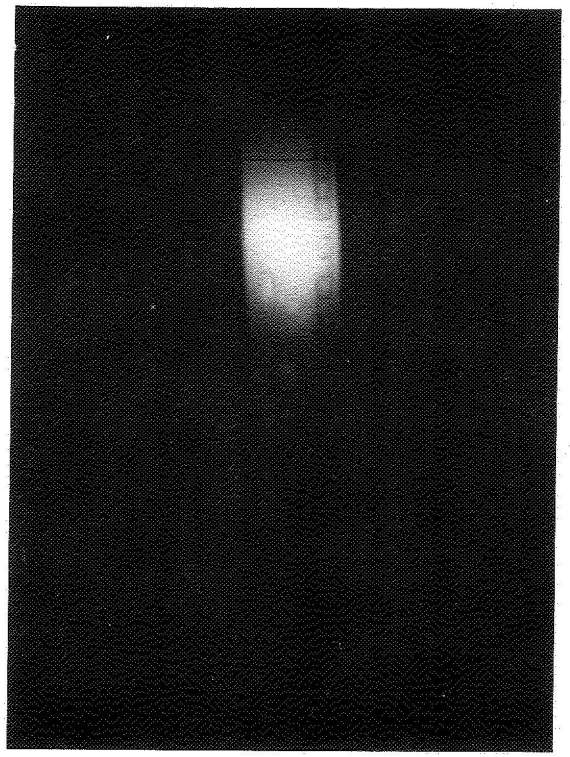

u_f = 11.4 cm/sec
(g = 0)

Fig. 10. Comparison of (g = 1) and (g = 0) Upward Flame Propagation through a Lycopoduim Cloud (Saturated Walls). c_0 = 130 mg/liter.

(VIII) REFERENCES

1. Berlad, A. L.: Huggett, Clayton; Kaufman, Fred; Markstein, George; Palmer, H. B.: and Yang, C. H. "Study of Combustion Experiments in Space". NASA Contractors Report CR-134744 (Nov. 1974).
2. Palmer, K. N. "Dust Explosions and Fires". Publ: Chapman and Hall (1973). London.
3. Berlad, A. L. and Killory, J. "Combustion of Particulate Clouds at Reduced Gravitational Conditions" (Appendix A).
4. Berlad, A. L. and Killory, J. "Flame Propagation and Extinction for Clouds of Particles". Paper presented at the March 28-30, 1977, Meeting of the Central States Section, The Combustion Institute.
5. Berlad, A. L. "Gravitational Effect on Combustion". INVITED PAPER. Progress in Astronautics and Aeronautics 52, 89-110 (1977). Editor: Leo Steg. Publ: American Institute of Aeronautics and Astronautics (Appendix B).
6. Berlad, A. L. "Fluid and Combustion Dynamics" U. S. National Bureau of Standards Special Publication #570 (1978): "Applications of Space Flight in Materials Science and Technology".
7. Taylor, G. I. "On the Decay of Vortices in a Viscous Fluid". Phil. Mag. 46, 671-4 (1923).
8. Williams, F. A. "Combustion Theory". Publ: Addison-Wesley (1965).

9. Lovachev, L. A. et al. "Flammability Limits: AN INVITED REVIEW". Combustion and Flame 20, 259 (1973).

10. Tyler, B. J. "An Experimental Investigation of Conductive and Convective Heat Transfer During Exothermic Gas Phase Reactions". Combustion and Flame 10, 90 (1966).

11. Berlad, A. L. and Yang, C. H. "On the Existence of Steady State Flames". Combustion and Flame 3, 447 (1959).

12. Berlad, A. L. and Yang. C. H. "A Theory of Flame Extinction Limits". Combustion and Flame 4, 325 (1960).

13. Spalding, D. B. "Some Fundamentals of Combustion". Publ: Academic Press (1955).

14. Dixon-Lewis, G. and Isles, G. L.
    (a) "Limits of Inflammability". VII Symposium (International) on Combustion. p. 475 (1959).
    (b) "Flame Structure Studies". VIII Symposium (International) on Combustion. p. 448 (1961).

15. Smoot, L. D.: Horton, M. D.: Nielson, S. M. and Luke, D. E. "Structure of Laminar Pulverized Coal-Air Flames". XVII Symposium (International) on Combustion. In Press (1979).

16. Smoot, L. D., Horton, M. D. and Williams, G. A. "Propagation of Laminar Pulverized Coal-Air Flames". XVI Symposium (International) on Combustion. p. 375 (1977).

17. Mason, W. E. and Wilson, M. J. G. "Laminar Flames of Lycopodium Dust in Air". Combustion and Flame 11, 195 (1967).

18. Horton, M. D., Goodson, F. P. and Smoot, L. D. "Stabilized Coal-Air Flames". Combustion and Flame 28, 187 (1977).

19. Kaesche-Krischer, B. and Zehr, J. Z. Phys. Chem. N. F. 14, 384 (1958).

APPENDIX A

COMBUSTION OF PARTICULATE CLOUDS AT REDUCED GRAVITATIONAL CONDITIONS

Based on an Interim Report

by A. L. Berlad and J. Killory

February 1977

NASA Grant NSG-3051

CONTENTS

Page

A. Introduction and Background. 39

A.1. Gravitational Settling 41
A.2. Creation of a Homogeneous Combustible Cloud at g = 1 and the Effects of Turbulence, Turbulence Decay Rates and Gravitational Settling on Combustion Observations. 43
A.3. Procedural Constraints on Experimentation on Particle Combustion Phenomena - Summary 45

B. Justification. 46

B.1. Background 46
B.2. Analytic Bases for Recommended Research in Space 47
B.2.1. Autoignition Theory for Clouds or Particles. 48
B.2.2. Flame Propagation and Extinction Theory for Clouds of Particles 52
B.3. Experimental Bases for Recommended Research in Space 57
B.4. Potential Impact of Space Shuttle Generated Data on Particle Cloud Flame Propagation and Extinction at g = 0. . . 59
B.5. Ground Based Research. 60
B.6. Summary. 63

C. Space Lab Experiment as Currently Conceived. 64

C.1. Experimental Objectives. 64
C.2. Description of Experiment. 65
C.3. Experimental Procedures. 66

D. Feasibility Issues 67

D.1. General Issues and Objectives. 67
D.2. Experimental Feasibility Items 68
D.2.1. How Will We Know the Particle Concentration, for a Given Experiment 68
D.2.2. How Will We Know that the Particle Concentrations are Uniform, for a Given Experiment. 69
D.2.3. How Will We Determine the Composition of the Gas Phase Oxidizer 70
D.2.4. How Will We Ignite the Uniform, Quiescent Cloud of Particulates. 70
D.2.5. How Will We Observe and Measure Steady State Flame Propagation Rates and Extinction 70
D.2.6. How Will We Interpret Our Observations 71
D.2.7. Can Laser Doppler Velocity Measurements Be Usefully Employed In These Studies? 71

D.3. Summary of Current and Anticipated Activities Required to Firm Up All Feasibility Issues 71

E. References 73

F. Figures 76

(A) INTRODUCTION AND BACKGROUND

The understanding and control of the combustion of particulate clouds in an oxidizing atmosphere is central to an exceptionally broad class of design, operational and safety problems of natural and man-made systems. Important examples include numerous energy conversion devices, mining, milling, storage and transport of combustibles, the safety of natural and man-made structures, and other systems.[1] Under normal conditions gravity will affect these phenomena.[2,3]

K. N. Palmer, in the preface to his recent treatise[1] on "Dust Explosions and Fires" notes that:

> "Dust explosions and fires are known hazards in many industries but the literature on the subject is fragmentary and there is need of a unified account. This book attempts to give a comprehensive picture of the present state of knowledge concerning dust explosions and fires, involving both practical and theoretical aspects. The subject has in the past received less attention than it merits and it is to be hoped that when the serious gaps in knowledge are made apparent, stimulus will be given to future study both in the laboratory and on industrial plant."

Major portions of this report are devoted to demonstrating the difficulty or impossibility of experimentally obtaining the essential combustion parameters (for particulate clouds) in earth-bound ($g = 1$) laboratories.

A central problem for any combustion system is the characterization of the initial and spatial boundary conditions and the principle physical mechanisms operating. Typical analyses lead to steady state solutions in which temperature and composition structure as well as flame propagation rates can be determined. Additionally, such analyses can also lead to formulation of a model to predict flame extinction.

However, for the specific problem of particulate cloud combustion, such a general theory is not available. Thus (p. 11 of reference 1) K. N. Palmer notes: "The relationships between flame speeds and properties of the dusts including particle size, and the turbulence of the gas have not yet been derived by theory." Palmer goes on to lament the shortcomings of available experimentation and the lack of guidance thereby offered the theorist. He notes (p. 189):

> "Once the mechanism of flame propagation has been established with reasonable certainty, even if for only one dust, the number of possible rate determining physical processes is reduced and this simplifies theoretical analysis. Such analysis is more likely to be successful if a wide range of variables does not have to be considered, and could lead, at least in general terms, to equations representing the steady state of flame propagation, from which flame speeds and thicknesses would be predictable."

In the discussions that follow, it will be shown that earth-bound experimentation on combustion phenomena in particle clouds generally introduce a "wide range of variables", some (like turbulence in flames) not easily characterized, thus making theoretical analyses of this class of problems difficult, if not impossible.

Let us consider the problems involved in attempts to conduct experiments on the steady flame propagation and extinction characteristics of clouds of particulates (e.g., lycopodium powder, cellulose, coal, etc. in air) at $g = 1$. A standard approach for conducting these kinds of experiments is to observe flame propagation in 5 cm i.d. tubes.[2] For the particular case of <u>clouds of combustible particulates</u>, vigorous mixing techniques[1,3,4,5] are required in order to establish homogeneity of the combustible cloud. The mixer is switched off prior to ignition.

What results is a highly turbulent, initially homogeneous cloud that is strongly time-dependent. The mechanisms responsible for this time dependence are: (1) the viscous decay of the turbulence introduced by mixing and (2) the gravitational settling of the particulates (for $g > 0$). It is virtually impossible for the analyst to model these efforts so that the choice is to either ignore them, thus compromising the value of a comparison between theory and data, or to wait until they dissipate to establish a better (known) initial condition. However, by waiting for full turbulence decay in a normal gravity test we allow a longer time for gravitational settling of particulates to occur. We will consider the effects and importance of these two physical processes, for the various particle cloud experiments of interest in succeeding sections.

A.1. Gravitational Settling

Combustible porous solid particles of fundamental and practical interest in cloud combustion studies may vary in size from some 30×10^{-4} cm (e.g., lycopodium spores) to substantially more than 10^{-2} cm (e.g., cellulose or coal). For a unit density spherical particle in still air at normal temperature and pressure terminal (settling) velocities may be calculated to give, for $g = 1$, a terminal velocity of 9.8 cm/sec for a 30 micron particle and some 109 cm/sec for a 100 micron particle. Currently estimated coal dust flame speeds, in the neighborhood of lean limits, are thought to be less than 50 cm/sec. The uncertainty of this value is, of course, due to the fact that the lean limit regime flame speeds provided in reference (6) suffer from having been determined

in a highly stirred (turbulent) preheated apparatus. Accordingly, for the practical range of particle sizes (<30 μm) we conclude that settling velocities and lean limit flame speeds are of the same order. Therefore, vertically upward flame speed will be affected by the settling velocity. Further, the settling velocity itself is of such a substantial value that a large percentage of the cloud will settle out quickly and cause a nonuniform particle concentration before involvement with the combustion phenomena occurs. Some attempts have been made to ascribe the observed transient nature of upward propagation of flames (at $g = 1$) to a settling prescribed phenomenon.[7] Downward propagation is generally found to be difficult or impossible to achieve experimentally. Where gravitational settling velocities are larger than particulate cloud flame speeds, a coherent flame front cannot exist. The falling particulates "outrace" the flame phenomenon.

To summarize the above, experimentation on earth with systems involving large particles is severely limited because of high characteristic settling velocities that result in destroying cloud homogeneity and in interfering in the combustion phenomena itself.

For exceedingly small (impractical) particle sizes (of the magnitude of 1 micron) the settling velocity is on the order of 0.1 cm/sec, which is significantly smaller than the expected flame speeds. In addition, if a maximum experiment time of 10 seconds is assumed, a 1 micron particle of unit density would be displaced approximately 1 cm. This means that the uniformity of the particle could would be essentially retained during the experiment. These arguments suggest, therefore, that for experimentation with clouds composed of very small

particles gravitational settling effects can be neglected.

A.2. Creation of a Homogeneous Combustible Cloud at g = 1 and the Effects of Turbulence, Turbulence Decay Rates and Gravitational Settling on Combustion Observations.

As discussed previously, in order to create a homogeneous cloud of combustible particles in an experimental combustion device, vigorous mixing is required for dispersion of particles.[1,3,4] In general, after cessation of mixing, the behavior of the cloud of particles is characterized by turbulently decaying secondary flow. All fundamental theories of flame propagation require specification of transport coefficients.[8] These are not known for this highly confused flow situation; accordingly, the (g = 1) experimenter is presented with what amounts to an ill-defined initial condition for the experiment. His alternatives are:

(1) The experimenter may initiate flame propagation in the test apparatus immediately after vigorous mixing achieves combustible cloud homogeneity. The observed flame propagation rates or extinction conditions will then occur in a system of unknown and decaying transport processes which occur in simultaneity with the gravitational settling of the initially homogeneous cloud, which, as we have shown, is critically important for relatively large particles.

(2) The experimenter may wish to wait for the mixing-associated turbulence to decay, prior to initiation of the combustion test. This procedure will work well for extremely small particle sizes.

Recent experiments at Stony Brook show that even modest mixing rates of (large) 100 micron particles give rise to particle relative to gas velocity ≥300 cm/sec. In these experiments, stroboscopic time

sequence studies of individual particles (subjected to hand shaking within a closed, air-containing tube involving no primary gaseous flow) were employed to measure translational particle speeds ≥300 cm/sec. The observed, near-elastic wall collisions of the particles, coupled with the absence of any primary (or channeled secondary) air circulation indicates that the observed spatial speed of the particle closely approximated the average speed of the particle relative to its gaseous environment. This corresponds to a particle Reynolds number ≥19.8 and produces a turbulent particle wake behind the particle. For a cloud of particulates, each of similar size and speed, the motion of these many turbulent wake generators gives rise to a complex two-phase turbulent condition.

Theory of the decay of turbulence in two-phase systems is currently incomplete.[9-13] Nevertheless, it is clear in normal gravity that decay times in initially turbulently mixed two-phase systems <u>are substantially longer</u> than those for corresponding single phase systems where substantial particle-gas velocities exist. One reason is that the kinetic energy of the particulates decays relatively slowly compared to the gas phase energy and therefore acts as a "pumping mechanism" for the gas phase turbulence, which also decays by viscous dissipation. Another reason is that the gravitational potential energy of the particles is continually being converted to kinetic energy in the particles as they fall. This kinetic energy is being dissipated to the turbulent wake behind these larger particles until settling has occurred. Therefore, a characteristic decay time for the <u>pure gas</u> phase system represents <u>a lower limit for the turbulent decay of</u> the two phase system of interest. G. I. Taylor

considered the single phase system and showed[14] that the characteristic decay time, τ, may be approximated by

$$\tau = \frac{r^2}{4\nu}$$

where τ = decay time, r = tube radius, and ν = kinematic viscosity. For a 2.5 cm radius tube containing an air-like gas (at NTP), we obtain τ = 10.3 secs. For this case, then, we conclude that the g = 1 experimenter examining larger particles would have to wait substantially longer than 10 seconds in order to initiate a combustion experiment for which the mixing-induced turbulence effects have dissipated, for the two-phase system of interest.

A.3. Procedural Constraints on Experimentation on Particle Combustion Phenomena - Summary

Our discussion in previous sections have shown that at g = 1, the combustion experimenter has the ability to experimentally study flame propagation and extinction for a steady-state, two-phase system of known constant composition and thermo-physical properties only for very small particles. For large particles it is impossible to establish a well-ordered, definable set of initial conditions on earth which would make combustion phenomena in such systems ammenable to analysis.

It is apparent, therefore, that, from a procedural point of view, experimentation in a low-gravity environment is justified for systems involving large particles. However, the following questions remain to be answered before a sound justification for spacelab experiments can be assumed established:

(1) Is there a scientific justification for carrying out research in weightlessness on combustion of particle clouds in general (both large and small particles)?

Assuming that the answer is yes

(2) Is there physically enough low gravity test time in ground based facilities, (drop towers, airplanes,...) to conduct all the necessary experiments?

If the answer is an unqualified no then spacelab experiments are obviously justified. However, if it appears that only large particle cloud experiments require spacelab

(3) Are the mechanisms governing the combustion of clouds or large particles significantly different from those for clouds of small particles?

An affirmative answer to this question then clearly finalizes the justification for spacelab experimentation.

(B) JUSTIFICATION

B.1. Background

Combustion phenomena involving particulate clouds, as encountered in natural and man-made systems include explosion of clouds of particles,[1,3] flame initiation, propagation, and extinction in clouds of particles.[15,16]

Under normal gravitational conditions, gravitationally induced free convective heat and mass transport appears to play a major role in determining the characteristics of flame spread over solid sheets. Upward and downward flame-propagation rates and extinction are

different,[3,17] and commonly employed representations of two-phase burning phenomena frequently assume that free-convection[18] rates dominate all other transport mechanisms and "control" (limit the rate of) chemical kinetic processes.

For the case of particulate clouds, we have shown how $g = 1$ studies of larger particles ($\gtrsim 30\mu$) are compromised by the inability to provide the necessary stationary experimental conditions prior to combustion initiation. But even if these required experimental conditions were accessible at $g = 1$, free convective effects[17,18] would be expected to dominate the underlying flame propagation mechanisms. Experiments in a zero or low gravity environment thus may permit

(a) uniform, turbulence-free clouds of combustible particulates to be established and maintained, prior to the initiation of combustion, and

(b) the observation of flame propagation through and extinction by uniform particulate clouds wherein molecular conduction and radiative transport (rather than free convection) are the dominant heat transfer mechanisms. The importance of these observations to the advancement of the state of the art is discussed in the next sections.

B.2. Analytic Bases for Recommended Research in Space

Particle clouds support combustion phenomena (with a gaseous oxidizer) in a coupled fashion. The coupling mechanisms include particle-particle and particle-gas radiative heat transport, free and forced (thermal expansion) convection heat and mass transport between particle and gas, and molecular transport processes (conduction and

diffusion). Additional energy loss mechanisms (necessary for an understanding of extinction phenomena[2,19]) couple the gaseous medium to the boundaries (convection, conduction and radiation). Interacting with this complex of transport processes is the kinetics of oxidation.

In the study of premixed gas phase combustion a set of characteristic phenomena are observed: initiation, autoignition, flame propagation, extinction. For clouds of solid particles, similar phenomena[1,3,15,16,20] are observed but detailed theories (comparable to those existent for premixed gaseous systems) generally are not available. In order to examine the rudimentary analytical requirements for such theories, an examination has been made of particle-cloud autoignition theory and the possible roles of gravitational effects upon it. It has been shown,[21] for premixed gaseous systems, that the representations in successful autoignition theory are basic to successful flame propagation and extinction theory. Conceptually and analytically, autoignition theory is simpler.[21] Essential constructs (regarding transport or kinetic processes) that fail in an autoignition theory, may be expected to contribute to the failure of flame propagation and extinction theory. This important relation between gas phase flame theory and autoignition theory stems from the essential fact that the autoignition theory is taken to be (theoretically) a special case of flame theory.

B.2.1. Autoignition Theory for Clouds of Particulates

We have found that there is a substantial effect of gravitational conditions on particle cloud autoignition. The analytic model considers

each particle of a cloud of particles to be an exothermic source interacting with an oxidizing atmosphere. Additionally, the gaseous oxidizers can interact (by transport processes) with boundaries. Accordingly, two energy conservation equations are written, one for the cloud of particles and one for the gaseous medium. Transport processes and oxidation kinetics couple the two systems to each other, and to the boundaries. Considering the simplified case of a cloud of nonporous solid particulates, we may write the energy conservation equations as follows:

$$M_p c_p \left(\frac{dT_p}{dt}\right) = S_p[\dot{q}''_p - \alpha_1(T_p - T_g) - L_r] \tag{1}$$

and

$$M_g c_g \left(\frac{dT_g}{dt}\right) = S_p[N\alpha_1(T_p - T_g) + (1 - \delta_g)L_2] - \alpha_2 S(T_g - T_0) \tag{2}$$

where M_p, particle mass; c_p, particle specific heat at constant pressure; T_p, particle temperature; S_p, particle surface area; $\dot{q}''_p$, heat release per unit surface area of particle; α_1, heat exchange coefficient between particle and gas; L_r, radiative exchange rate at a particle surface, per unit area; M_g, total mass of gas in system; c_g, gas heat capacity at constant pressure; T_g, gas temperature; N, number of particles; δ_g, optical transmissivity of the gas; α_2, heat exchange coefficient between combustible system and the boundaries; S, characteristic vessel surface area for heat loss to surroundings; T_0, wall temperature.

We may use the method of the phase plane[21] in conjunction with equations (1) and (2) to derive criticality conditions for the explosive system of interest. For the non-radiative case (i.e., $L_r = 0$):

Set

$$\frac{dy}{dx} = \frac{M_g c_g}{M_p c_p}\left(\frac{dT_g}{dT_p}\right) = \frac{Q}{P} = \frac{0}{0} \tag{3}$$

at the singular point corresponding to a critical Steady State. If we define

$$A \equiv \left(\frac{\partial Q}{\partial x}\right)_s ; \qquad C = \left(\frac{\partial P}{\partial x}\right)_s$$
$$B \equiv \left(\frac{\partial Q}{\partial y}\right)_s ; \qquad D = \left(\frac{\partial P}{\partial x}\right)_s \tag{4}$$

and take the autoignition condition to correspond to a saddle-node[26] then

$$(AD - BC) = 0 \tag{5}$$

is the critical condition for the saddle-node. This condition must be taken together with the conditions for the corresponding stationary states of the individual particle energy conservation equation and the energy conservation equation for the gaseous medium. Equations (1)-(5) then yield the three conditions:

$$\left(\frac{\partial \dot{q}''_p}{\partial T_p}\right) = \frac{\alpha_1}{1 + \left(\frac{N\alpha_1}{\alpha_2}\right)\left(\frac{S_p}{S}\right)} \tag{6}$$

$$N\alpha_1 (T_p - T_g) - \alpha_2 (S/S_p)(T_g - T_0) = 0 \tag{7}$$

$$\dot{q}''_p - \alpha_1 (T_p - T_g) = 0 \tag{8}$$

In order to apply this set of three equations to the calculation of autoignition conditions for a cloud of combustible particulates in an oxidizing atmosphere, some knowledge is required of $\dot{q}''_p$, α_1, and α_2, as well as the usual thermophysical properties.

Based on our previously discussed requirements of a quiescent,

uniform cloud for a proper flame propagation (or ignition, or autoignition, or flame quenching) experiment, we do not have any experimental data against which autoignition theory can be compared. However, available data from which kinetic data may be estimated for zirconium[1,5] have been used, along with equations (6)-(8) to show the effects illustrated in Figure (1). For a total particle mass of 1 gm [M_p], unit particle density and a particle size of 1 micron (settling velocity $\sim$0.1 cm/sec) the free convective effects implicit in α_1 may be taken to be negligible. This is deduced by calculating a particle Rayleigh number based on $10 < (T_p - T_g) < 100$ (typical). Such Rayleigh numbers are found to be <u>much</u> smaller than unity. The lower Rayleigh number bound found by Tyler[24] for significant free convective heat transfer to occur in internally heated vessels was found to be $\sim 10^3$. The Rayleigh number is given by

$$N_{R_a} = \frac{g\beta d^3(\Delta T)}{K\nu} \tag{9}$$

where g, acceleration due to gravity; β, the coefficient of volumetric thermal expansion; d, the characteristic dimension of the system (particle diameter for α_1 and vessel diameter for α_2); (ΔT), the characteristic temperature difference; K, the molecular thermal diffusivity; ν, the kinematic viscosity.

In considering α_2 for reasonably sized spherical vessels (e.g., a one liter vessel) it is clear that Rayleigh number greater than 10^3 are possible, particularly at elevated pressures ($N_{R_a} \sim p^2$). It is assumed that Tyler's heat transfer observations[22] may be correlated by an expression of the form

$$\alpha_2 = \alpha_{2,0}[1 + 0.25(N_{R_a})^{1/3}] \tag{10}$$

where $\alpha_{2,0}$ is the heat transfer coefficient for a vessel which sustains no free convective heat transfer (pure molecular conduction).

The zirconium particle is considered to oxidize at its surface. Thus, the particle (surface) heat release rate, $\dot{q}''_p$, requires a (surface) kinetic rate expression as well as a knowledge of the rate parameters implicit in it. Frank-Kamanetskii[23] has suggested a rate expression:

$$\dot{q}''_p = A' h_c \rho_g Y_{og} \exp(-E_1/RT_p) \tag{11}$$

where A', preexponential factor; h_c, heat of combustion of particulate material; ρ_g, gas density; $Y_{o,g}$, mass fraction of oxygen; E_1, effective activation energy for the reaction. Values of $A' = 10^6$ cm/sec and $E_1 = 18{,}000$ cal/gm mol were employed in the calculations which give the results shown in Figure (1). Other data employed are $h_c = 7000$ cal/gm, $M_p = 1$ gm, $g = 980$ cm/sec^2; and $\alpha_1 = 10^{-4}$ cal/cm^2 °K sec. Figure (1) shows that as the (spherical) container's size is increased <u>and</u> as pressure is increased, the free convective effects implicit in α_2 are significant and increasing (for g = 1). Thus, the results illustrated in Figure (1) imply that gravitational effects on particle-cloud autoignition phenomena can be substantial. This is true for particles of <u>all</u> sizes, large or small.

B.2.2. Flame Propagation and Extinction Theory for Clouds of Particulates

Essenhigh[24] has reviewed the theory for flame propagation associated with coal combustion. The primitive state of our understanding for this two-phase combustion system is suggested in his concluding remarks:

> "...there are still questions to be answered to complete the definition of those (qualitative) mechanisms before even simple flame models are worth constructing in much detail."

These comments, taken together with those contained in K. N. Palmer's review[1] (discussed earlier) suggest the need for fundamental development of two phase flame theory.

Existing theory for flame propagation through coal particles is generally an algebraically correlative one and not based upon the solution of a set of differential equations (unlike the case for pure gaseous systems[3,8,21]). King[20] has developed a theoretical flame propagation theory for boron-oxygen-nitrogen dust clouds. King's theory does not consider free convective transport processes to be operative. It is an adiabatic theory and does not predict flame extinction limits. Nonadiabatic flame theory is generally expected[8] to provide flame extinction limits. C. H. Yang[25] has reviewed existing particle cloud combustion theories. In commenting on flame propagation studies subject to normal gravitational conditions Yang notes:

> "Current data are generally measured with flame propagating upward in a vertical tube. The relative velocity between the particles and surrounding gases in such a case complicates the flame mechanism so severely that a reasonably simple one-dimensional model no longer appears to be suitable."

The implication of this statement is that gravitational settling, free convection and energy loss effects can not be ignored in any realistic ($g = 1$) model for flame propagation and extinction. It is of interest to note that for similar types of models for pure gaseous systems

Lovachev as well as Levy[26] have proposed theories of upward flame propagation wherein the primary flame transport mechanism is free convection.

For very small drops, Williams[27] has proposed a one-dimensional monodisperse model. Williams considers the combustion and heat evolution to occur in a reaction zone containing fully mixed, gaseous fuel and oxidizer. That is, for small drops vaporization is completed in the (relatively cool) flame regime upstream of the reaction zone. Thus, for such small-sized drops/vaporizable particulates, the reaction zone essentially involves purely gas phase kinetics and a constant stoichiometry. It should also be noted that acceleration of the heated gases in the vicinity of the combustion zone introduces local forces (forced convection) on any particulates present. Very small (e.g., 1 micron) vaporizable particles may be expected to

(a) be largely gasified, before the peak reaction rates (peak acceleration) are achieved;

(b) display very small velocity defects (particle-gas velocity differences).

For the case of purely gaseous (one phase) combustion systems, flame propagation and extinction theory (see, for example, the review given in reference 3) has achieved substantial success even though it has essentially ignored any such "forced convective" transport process. If this effect is negligible for the pure gas phase system it may also be negligible for the case of a two phase system which contains easily vaporizable, very small particles (for the reasons cited above). At this point, it would be our belief that post

reaction-zone transport properties play only a minimal role in prescribing burning velocities and extinction limits (at $g = 0$). This belief is based on our experinece (see work of Yang, and Berlad and Yang referenced in section IV.7 of reference 3) in integrating the flame equations for premixed gaseous systems (at $g = 0$). We have found the computed burning velocity and extinction limits to be insensitive to the post reaction-zone flame properties.

The experimental observation of, and theoretical modeling of, flame propagation through clouds of ultrasmall particles ($\sim$1 micron) is not expected to yield adequate insights into the experiment and theory for more realistic (larger) particle sizes. Recent studies have addressed flame propagation through drop/vaporizable particulate clouds of larger ($\sim$100 microns) particles. Here it is observed[25] (at $g = 1$) that flame fronts are irregular (upward propagation), that downward propagation is difficult (very slow) or impossible, and that there are cases where each condensed phase fuel element appears to burn with its own thin reaction zone surrounding it. Mitzutani and Ogasawara[7] postulated a theory of flame propagation for a cloud of large drops ($\geq$100 microns), each individually burning and gravitationally settling. Their model requires an arbitrarily defined "ignition time lag" to describe the time interval during which the drop/particle acts as an energy sink (rather than an energy source). An essential element in their theory (of upward flame propagation) is an attempt to model the "settling velocity "and an "ignition time lag" that dominates the phenomenon. For the case of a two-phase system

containing very large particles that are not substantially or fully vaporized in the combustion zone, a range of interesting forced convection effects may also be expected. In other words, we may want to add the possibility of a very large particle-gas velocity defect and the possible subsequent enhancement of local energy transport rates.

Based on the above discussions on the available theories on particle cloud combustion, it is clear there exists an intermediate regime of drop/particle sizes ($\gtrsim$30 microns, <200 microns) where

(a) settling velocities are substantial (at $g = 1$), and one must differentiate upward from downward flame propagation.

(b) drop or particulates are vaporizing <u>in</u> the flame reaction zone, whose gas phase stoichiometry is then not constant.

(c) the reaction zone sustains internal cooling, associated with the drop/particulate heats of vaporization (a possible quenching mechanism).

For such a system, none of the models previously cited[7,27,28] is appropriate at $g = 1$. Characteristics (b) and (c) rule out the Williams analysis[27] at either $g = 0$ or $g = 1$. The analyses of Mitzutani and Ogasawara[7] and of Srinivas[28] do not consider the collective (gas phase) oxidation of drops/particulates in a flame reaction zone.

To summarize the state of the art concerning flame propagation and extinction <u>theory</u> for clouds of particulates, we conclude that

(a) current theoretical models are not capable of describing the complex, gravity-influenced (settling and free convection) particle-cloud flame propagation and extinction phenomena that is known to occur on earth.

(b) the ability to rationalize theory with experiment would be simplified if we could assume that

(i) gravitational settling is of no significance,

(ii) gravitationally induced free convection does not occur.

(c) A theory constructed with the assumptions implicit in (b) could be made to properly prescribe ($g = 0$) flame propagation and extinction limits if it included radiative, conductive and significant forced convective losses to walls.

(d) A theory constructed along the lines of (c) would be expected to correspond to the observations of Space-Shuttle based ($g = 0$) particle-cloud flame propagation and extinction observations.

It is important to note that the primary physical concepts utilized in autoignition theory can be extended to flame propagation theory for particulate clouds--for large particles.

A theoretical approach to particulate cloud flame propagation theory is currently under development. It attempts to extend the Williams[27] approach to larger drops/particulates and to avoid the complications that "settling" and free convection play both in experimentation at normal gravitational conditions and in corresponding theory.[7,28]

B.3. Experimental Bases for Recommended Research in Space

In order to measure the fundamental flame propagation and extinction characteristics associated with particle clouds in tubes, it is necessary that

(a) the initial physical and chemical characteristics of the unreacted combustible medium be uniform in space and time. All properties, including transport coefficients must be characterized.

(b) steady state flame propagation be achievable, except in the regime associated with flame extinction.

Our previous discussions (sections A.1 and A.2) have shown that conditions (a) and (b) are achievable at $g = 1$ only for very small particles. For clouds of large drops/particulates, substantial settling velocities establish conditions whereby only the lower portions of the vertical tube contain flammable (albeit transient and spatially non-uniform) mixtures. Accordingly, attempts to initiate flame propagation at the top of the tube generally fail and downward flame propagation is not reported.

To summarize the difficulties involved in $g = 1$ experiments:

(a) nonuniform clouds and/or undefined, mixing-induced secondary flow characteristics of unburned reactants (for large particles)

(b) time-dependent characteristics of unburned reactants

(c) "gravitational settling" of particulates

(d) free convectively influenced flame transport and propagation mechanisms (upward and downward flame propagation are observed to differ substantially)

(e) free convectively influenced flame heat loss and extinction mechanisms (upward vs. downward extinction conditions are observed to differ substantially).

For clouds composed of large particle, all of the items (a) through (e) provide reasons for conducting experiments in weightlessness.

While for very small particles only items (d) and (e) provide a basis for such research. In other words, particle-cloud flame propagation and extinction experiments should be carried out in weightlessness for small particles because there:

(a) free convection effects are of no significance

(b) flame propagation and extinction data may be provided which serve as fundamental, reproducible standards.

While in addition to the above, for large particles of practical and fundamental interest:

(a) There is adequate time to carry out the mixing process necessary to create a uniform cloud of combustible particles in an oxidizing gas.

(b) There is adequate time for the mixing-introduced turbulence to decay, thereby assuring a valid characterization of heat transport in terms of molecular and radiative transport properties.

(c) Gravitational "settling" effects are of no significance.

B.4. Potential Impact of Space-Shuttle Generated Data on Particle-Cloud Flame Propagation and Extinction at $g = 0$.

The data to be obtained will represent fundamental experimental standards for steady-state, two-phase flame propagation and extinction phenomena. It is to be expected that these observed ($g = 0$) combustion phenomena can serve as measures of convection-free theoretical flame propagation theory. Such a theoretical representation is expected to be far more tractable than one that included free convective processes. Moreover, the experimental data needed to measure the adequacy of such theory will then be available. Thus, the space-based data permit the

construction, testing, and verification of two-phase flame propagation theory (at $g = 0$) which may then serve as a point of (verified) departure for required $g > 0$ experiment and theory.

The practical implications of the proposed space-based experiments are substantial. In earlier sections we noted the broad technical and societal interests in energy conversion devices, mining, milling; the storage, transport and safety of combustibles; and the very specific interests in the combustion characteristics of porous solids such as coal, cellulosics, synthetic fibres, corn starch, lycopodium dusts, and other organic-based particulates. At the foundation of our present understanding of the underlying combustion processes is an extensive array of partially deficient experiments. Once a body of $g = 0$ data and a suitable, verifiable theory is achieved, subsequent studies aimed at addressing $g > 0$ flame propagation and extinction processes will be aided.

B.5. Ground-Based Supporting Research

It is not possible to carry out most of the experiments of interest either in an ordinary ($g = 1$) earth-bound laboratory or in earth based zero gravity facilities.

For systems involving large particles, our previous discussions indicate that the time required to conduct experiments is longer then available today in what, for these rather complicated tests, would be practical earth based low gravity facilities (droptowers or airplanes). Assuming that sufficient mixing occurs prior to entry into low gravity, the items of interest are:

(1) the time for decay of mixing induced turbulence and the

establishment of a quiescent condition (order of magnitude estimates this to be substantially longer than 10 seconds).

(2) the time to carry out the combustion experiment (for the system of interest, 100 cm long tube, this should not exceed 10 seconds).

For systems involving small particles only item 2 becomes important. It would be possible to mix the cloud prior to entering the low gravity environment and then wait the necessary time for a quiescent condition without fear of inducing substantial nonuniformities since settling effects would be small. However, the answer to how much time is required to carry out the experiment is pure conjecture since it is not obvious what the effect of gravity is on flame propagation near the so-called "limit". If the "limits" widen in low gravity as compared to what has been observed in normal gravity and much lower flame speeds are possible prior to reaching the "limit" in low gravity, then much longer test times will be necessary.

Before going on to discuss ground based research that should be conducted to qualify these problems it should be noted that ground based low gravity facilities do not permit adequate time for a meaningful autoignition experiment either. An essential assumptions of quasisteady autoignition theory is that adequate time has been allowed for the establishment of the nonuniform temperature field which characterizes a subcritical (barely nonexplosive) system. In some autoignition experiments (e.g., hydrocarbons with oxygen) ignition delays of greater than 30 seconds are observed. A discussion of such long ignition delays in (gaseous) hydrocarbon oxidation is given by C. H. Yang and B. F. Gray.[29]

Current and anticipated ground-based efforts include the following:

(a) Construction and refinement of the theory is necessary to analytically treat ($g = 0$) data.

(b) Experiments on the dispersion of solid particulates in gaseous oxidizers are required to test out concepts for quickly attaining uniform distributions of particles, in ($1 - g$ and $0 - g$).

(c) With uniform concentrations of particulates experimentally attainable (at $g = 0$), it becomes important to measure the "wall attachment" characteristics of particulates, in interacting with the wall of an experimental apparatus. Preliminary studies at Stony Brook indicate a "wall saturation" effect, which limits the surface density of particulates which may adhere to a given experimental apparatus (tube).

(d) Particle-clouds in tubes may have their number densities characterized by optical attenuation measurements, once wall saturation effects are understood. Work at Stony Brook and at Lewis Research Center has addressed the use of optical attenuation for the characterization of particle number densities, and has recently centered on the development of a flame apparatus vibrator, for dispersal of a uniform cloud of particulates. Two bellows, one on either end of the flame propagation tube will be employed to assist in the mixing process and to provide plenums for specified pressure conditions (see next section for details).

(e) Exploratory studies with proposed elements of apparatus, and proposed techniques will be carried out, both at $g = 1$, at Stony Brook and at $g = 0$, using the 2-second drop tower at Lewis Research Center.

(f) Preparation for $g = 1$ and $g = 0$ flame propagation studies for <u>very</u> small ($\sim$1 - 10 microns) particles. Some particulates cannot be

provided in such small sizes (e.g., a 30 micron lycopodium spore is essentially changed when further subdivided). Cellulose, flour, coal are capable of such size subdivision.

B.6. Summary

It is our thesis that fundamental Space-Shuttle-based particle-cloud combustion studies can provide the longer experimental test times required to conduct such research. Space Shuttle conditions can allow for the "proper" mixing of large particles, the establishment of a quiescent uniform cloud of particulates, and the observation of flame propagation/extinction phenomena that are free of natural convective effects. The specific essentials of our arguments are:

(1) Not being able to provide fundamental experimental data for practical size particles ($\gtrsim$30 microns) by earth-based facilities (at $g \gtrsim 0$) these data do not exist. (Some $g = 1$ and $g = 0$ data may be attainable for very small particles.) Observed flame propagation and/or extinction phenomena in spacelab experiments will be associated with uniform known concentrations of particulates.

(2) The elimination of free convective effects (during Space-Shuttle experimentation) will permit the theorist to deal with a far more tractable problem than is otherwise possible. Namely, it is believed that the flame theorist will be able to assume that the heat transport properties of importance are molecular conduction and radiative transport; forced convectively induced transport may also be significant.

Once such melding of fundamental ($g = 0$) theory and experiment are achieved, the basis for construction of more general theory and experi-

ment ($g \gtrsim 0$) will have been provided.

(C) SPACELAB EXPERIMENT AS CURRENTLY CONCEIVED

C.1. Experimental Objectives:

The primary purpose of in-space experimentation is to provide flame propagation and extinction data for clouds of porous solid particulates--combustion data that are not otherwise available. A closely related pair of observations--steady flame propagation and extinction--have been proposed and discussed. It is our intention to emphasize the experimental determination of the flame propagation rates and extinction of clouds of porous particulates. This intended emphasis in no way argues against the vital need for autoignition experiments (at $g = 0$) for particles of all sizes. Previous discussion shows that autoignition experiments cannot be carried out with meaningful success (both for $g = 1$ and $g = 0$) in earth-based laboratories.

For a given flame propagation experimental apparatus (discussed in the following section) and a given pressure, it is intended that

(a) a spatially uniform cloud of a single (or multiple) component combustible particulate be established in an oxidizing gas;

(b) pressure and temperature are to be uniform, prior to experimentation;

(c) flame propagation and extinction studies are to be carried out in a "constant pressure" mode;

(d) the method of experimentation and the apparatus itself be useful for the investigation of a very broad class of particulates, and gases, even where the initial investigation is limited to modest

ranges of these.

(e) Data so obtained be suitable for tabulation as "standards", in the sense that they are highly reproducible and characteristic of the systems studies (including apparatus).

(f) Data so obtained be suitable for essential use in the testing evaluation, and extension of combustion theory.

(g) Particulates to be investigated may include lycopodium dust, cellulose, coal and other organic particulates. Inert particulates (quenching agents) may be employed as diluents.

(h) Gases to be investigated will include air, and special oxygen-nitrogen mixtures. Other oxidizers as well as inerts may be utilized.

(i) Flame propagation studies will include flame shape and translational speed.

(j) Flame extinction studies will identify criticality conditions in terms of active/inert particle concentration, oxygen concentration, inert gas concentration, apparatus (tube) diameter, initial temperature and initial pressure.

(k) Apparatus will be suitable for use with a spectrum of particle sizes--including the practical case where the cloud has a distribution of particle sizes.

If we can achieve these experimental objectives, we can do much to bring needed new understanding to this field.

C.2. Description of Experiment

Figure 2 is a schematic of the major portion of the experimental apparatus, as presently conceived, for use in an in-space investigation.

A 5 cm diameter transparent flame propagation tube section (approximately 100 cm long) will incorporate a primary ignition section at one end. The primary ignition section is somewhat wider than 5 cm, in order to preclude wall quenching effects on ignition. This is a standard, accepted precaution.[2]

The propagation tube section is separated from two large bellows, one at either end, by fine mesh screening, in order to limit particulate trajectories to the propagation tube (test) section, while permitting gas transfer operations between the test section and auxiliary portions of the apparatus.

Auxiliary experimental equipment will include a camera system for both streak and framing camera observation of the combustion process. Fine wall mounted (flush) thermocouples will be employed to identify steady state flame propagation (where it exists) and to measure flame propagation rates.

C.3. Experimental Procedures

Each experimental run will utilize a tube whose gaseous and particulate composition has been prepared in an earth-based laboratory.

Immediately prior to experimental testing, the pressure of interest (typically one atmosphere or less) will be established in the plenum.

Screens of the appropriate mesh size limit particle trajectories to the well-defined volume of the test section. The interdiction of the two bellows, between spatially fixed portions of the apparatus, permits the test section to be vigorously agitated, or to be gently shaken, (at constant volume and pressure) to assist in the establishment

of a uniform cloud. A test section vibrator will be employed to disperse the particulates. Schematics of vibrator under current test is shown in Figure 3.

Once uniformity of particulates is established (and all secondary flow damped), ignition will be attempted, to be followed by observation of flame characteristics and possible extinction.

Propagation limits in terms of initial pressure, temperature, particle and gas composition will be determined.

The wide-mouth bellows, and flanges, will be designed to accommodate larger diameter (or smaller diameter) flame propagation tubes.

(D) FEASIBILITY ISSUES

D.1. General Issues and Objectives

In earlier sections we have demonstrated that the proposed flame propagation and extinction experiments (with particles of bigger sizes) cannot be carried out either at ($g = 1$) or ($g = 0$), during time periods generally available in non-Space-Shuttle facilities. The primary reasons are related to "gravitational settling" and/or the long "decay times" required for a two-phase, turbulently mixed cloud to become quiescent and the time required to experiment near limit conditions.

Under Space Shuttle laboratory conditions, once a uniform, quiescent cloud of combustible particulates is established, it is clear that the observation of flame propagation and extinction can be carried out. Experimentally, from this point on, the ignition and other procedures and observations are essentially those which have been achieved by other investigators innumerable times, both for single and two-phase

systems (e.g. see references 3, 30-32).

The general experimental issues then resolve themselves, as follows:

(1) How will uniform particulate clouds be provided, prior to and during combustion experimentation in zero-g? Drop tower tests in which particulate clouds will be dispersed will provide some design criteria.

(2) What further experimental procedures and observational techniques will be required to carry out the experimental determinations in space?

(3) What ground-based preliminary/auxiliary experiments are required?

(4) What data are attainable in the drop tower for the very small particle sizes?

D.2. Experimental Feasibility Items

D.2.1. How will we know the particle concentrations, for a given experiment?

(a) A known charge of particulates will be prepackaged in an experimental apparatus.

(b) The "particulate package" will be weighed (at $g = 1$) before the experiment is taken to its space environment.

(c) The volume of the "experimental apparatus" is known. It is defined by the tube walls and by the planes of the "screens" that are located at the two end bellows.

(d) Some of the injected particulates will adhere to walls.

Work at Stony Brook is aimed at determination of the amount of adhering particulates. At g = 1, there is a "wall saturation" effect for all particulates and surfaces studied to date which permits one to determine, prior to experimentation, the mass of particulates that adheres per unit surface area of apparatus. Inasmuch as the "wall saturation effect" is observed to involve particle-surface forces that are much greater than particle-particle forces, it is expected that even very small disturbances [minute bellows deflection] will be adequate to assure the essential invariance of this effect at (g = 0). This must be verified in zero-g testing in a drop tower.

(e) Based on the information implicit in (a) - (d), the particle cloud concentration is known.

D.2.2. <u>How will we know that the particle concentrations are uniform, for a given experiment?</u>

(a) Very vigorous mixing at (g = 1) gives rise to optically determinable uniform concentrations.[4] It is expected that with (g = 0) this is more easily achievable. This must be verified in (g = 1) and (g = 0) testing in a drop tower.

(b) Optical extinction (by clouds of particles) have been observed to follow Beer's Law absorption very closely (work at Stony Brook and at Lewis Research Center). These optical absorption measurements yield an <u>average</u> particulate concentration along the optical path, time-invariance of absorption along a given path may be taken to mean that the average concentrations of particulate clouds that move in and out of the optical path are the same as those being displaced (by some

mixing process). This observation, plus the utilization of several (noncoincident) observational paths would provide excellent evidence of cloud uniformity.

(c) After vigorous mixing at $g = 0$, it is expected that the motion of particles will involve no substantial nonrandom processes. This should assure spatial uniformity of the cloud. Small nonuniformities (e.g. involving surface interactions) in force fields are expected to be dealt with by very gentle bellows action. Small, reciprocal bellows deflections are capable of inducing velocities corresponding to particle Reynold's numbers $\ll$ unity, thereby assuring no compromise of our knowledge of the operative transport properties of the two-phase system.

D.2.3. How will we determine the composition of the gas phase oxidizer?

Premixed oxidizer gases will be sealed in each test apparatus, along with the preweighed (at $g = 1$) particulate charge.

D.2.4. How will we ignite the uniform, quiescent cloud of particulates?

Ignition of single and two-phase combustible systems is a well-developed science.[1,4,30,31,33,34] Ground-based experiments are currently being conducted to prescribe, fabricate and demonstrate a simple, reliable spark ignition system for clouds of lycopodium, cellulose and coal.

D.2.5. How will we observe and measure steady-state flame propagation rates and extinction?

A number of wall imbedded thermocouples, of equal and known spacing, will be employed to determine time-temperature histories at

various stations along the tube. Two successive thermocouples providing the same time-temperature history will be required in order to demonstrate that a steady-state flame existed in the regime between these two stations. The translational flame propagation rate is directly determinable from the known distance between these two thermocouples and the measured time interval between corresponding temperatures of the two time-temperature trace. A framing and streak motion picture camera will be employed to determine the flame shape and to verify steady and unsteady behavior. Catastrophic decay of quasi-steady flame propagation will be taken to correspond to flame extinction.

D.2.6. How will we interpret our observations?

Current gas-phase theory is more appropriate to ($g = 0$) experiments than to $g > 0$ observations.[1-3] The same can be said of two-phase particle-cloud theory.[1,8,20,25,32] Work at Stony Brook is aimed at refinement and utilization of current theory.

D.2.7. Can Laser Doppler velocity measurements be usefully employed in these studies?

It is expected that an LDV apparatus may be available. Where small particle sizes are employed, LDV may offer important information on local particle velocities.

D.3. Summary of Current and Anticipated Activities Required to Firm Up All Feasibility Issues

Facilities at Stony Brook and at Lewis Research Center will be employed to firm up unresolved feasibility issues, experimental approaches, apparatuses and procedures. These include:

(a) Determination of "wall saturation effects". These effects have been demonstrated and determined for a number of particulates. Quantitative measurements have been completed for lycopodium spores, flour, chalk and other systems. They will be completed for various cellulosics and coal dusts. Drop tower experiments at $g = 0$ will also be carried out.

(b) Optical extinction measurements have been carried out for lycopodium powder and other particulates. Beer's Law is closely obeyed for the systems studied. These studies are being extended to cellulosics and coal dusts.

(c) Prototype experimental apparatus has been assembled, including a cylindrical combustion tube, screens, bellows and mechanical vibrator for cloud dispersion. Preliminary results indicate that approximate uniformity of the particulate cloud is achieved, during mixing in $g = 1$.

(d) An experimental ignition system is under construction and will be tested both at $g = 1$ and in the LeRC drop tower at $g = 0$. Turbulent ignition energies are higher than those for nonturbulent combustible systems. Accordingly, an ignition system that performs acceptably under these conditions will perform acceptably under Space Shuttle conditions.

(e) Testing with very small particle clouds in drop tower facilities to determine what limitations exist for this class of experiments for ground-based facilities.

A schematic indicating our schedule of ground-based supportive investigations is given in Figure 4.

(E) REFERENCES

1. Palmer, K. N. "Dust Explosions and Fires". Publ. Chapman and Hall (1973) London.
2. Coward, H. F. and Jones, G. W. "Limits of Flammability of Gases and Vapors". Bulletin 503, Bureau of Mines (1952).
3. Berlad, A. L.: Huggett, Clayton; Kaufman, Fred; Markstein, George; Palmer, H. B.,; and Yang, C. H. "Study of Combustion Experiments in Space", NASA CR-134744 (November 1974).
4. Ishihama, W. and Enomoto, H. Combustion and Flame 21, 177 (1973).
5. Jacobson, M.; Cooper, A. R. and Nagy, John. "Explosibility of Metal Powders". U.S. Bureau of Mines Report Rl 6516 (1964).
6. Csabo, J. "Flame Propagation in a Fully Dispersed Coal Dust Suspension". Ph.D. Thesis, Dept. of Fuel Technology and Chemical Engineering, University of Sheffield (England) 1962.
7. Mizutani, Y. and Ogasawara, "Laminar Flame Propagation in Droplet Suspension of Liquid Fuel". Int. J. Heat and Mass Transfer 8, 921-935 (1965).
8. Williams, F. A. "Combustion Theory". Publ: Addison-Wesley (1965).
9. Drew, D. A. and Segel, L. A. "Averaged Equations for Two-Phase Flows". Studies in Applied Mathematics L3, 205 (Sept. 1971).
10. Soo, S. L. "Fluid Dynamics of Multiphase Systems". Publ: Blaisdell, Waltham, Mass. (1967).
11. Lumley, J. L. "Drag Reduction in Turbulent Flow by Polymer Additives", J. Polymer Science, Macromolecular Reviews 7, 263-290 (1973).
12. Hoppel, J. and Brenner, H. "Low Reynolds Number Hydrodynamics" Publ: Prentice-Hall (1965).

13. Snyder, W. H. and Lumley, J. L. "Some Measurements of Particle Velocity Autocorrelation Functions in Turbulent Flows", J. Fluid Mech. 48, 41 (1971).

14. Taylor, G. I. "On the Decay of Vortices in a Viscous Fluid", Phil. Mag. 46, 671-674 (1923).

15. Mason, W. E. and Wilson, M. J. G. "Laminar Flows of Lycopodium Dust in Air". Combustion and Flame 11, 195 (1967).

16. Nagy, John, et al. "Explosibility of Miscellaneous Dusts", U.S. Bureau of Mines Report on Investigations 7208 (December 1968).

17. Markstein, G. H. and De Ris, J. "Upward Fire Spread over Textiles". XIV Symposium (International) on Combustion, p. 1085 (1973).

18. De Ris, J.; Kanury, A. M. and Yuen, M. C. "Pressure Modeling of Fires". XIV Symposium (International) on Combustion, p. 1033 (1973).

19. Lovachev, L. A. et al. "Flammability Limits: AN INVITED REVIEW". Combustion and Flame 20, 259 (1973).

20. King, Merrill K. "Predictions of Laminar Flame Speeds in Boron-Oxygen-Nitrogen Dust Clouds". XV Symposium (International) on Combustion, p. 467 (1974).

21. Berlad, A. L. "Thermokinetics and Combustion Phenomena in Nonflowing Gaseous Systems: AN INVITED REVIEW". Combustion and Flame 21, 275 (1973).

22. Tyler, B. J. "An Experimental Investigation of Conductive and Convective Heat Transfer during Exothermic Gas Phase Reactions". Combustion and Flame 10, 90 (1966).

23. Frank-Kamenetskii, D. A. "Diffusion and Heat Exchange in Chemical Kinetics", Princeton University Press (1955).

24. Essenhigh, R. H. "Combustion and Flame Propagation in Coal Systems: A Review", XVI Symposium (International) on Combustion, August 1976.

25. Yang, C. H., Chapter IV.5 of Reference 3. "Droplet Spray and Particle Cloud Combustion".

26. Levy, A. Proc. Roy. Soc. (London) A283, 134 (1965).

27. Williams, F. A., Combustion and Flame 2, 215 (1959).

28. Srinivas, V. "Flame Propagation through Monodisperse Liquid Fuel Sprays". Ph.D. Thesis, State University of New York at Stony Brook. Department of Mechanical Engineering (1975).

29. Yang, C. H. and Gray, B. F. "On the Slow Oxidation of Hydrocarbon and Cool Flames". J. Phys. Chem. 73, 3395 (1969).

30. Lewis, B. and von Elbe, G. "Combustion, Flames and Explosions of Gases". Academic Press, New York (1951).

31. Eckhoff, R. K. and Enstad, G. "Why are 'Long' Electric Sparks More Effective Dust Explosion Initiators than 'Short' Ones". Combustion and Flame 27, 129 (1976).

32. Berlad, A. L. "Gravitational Effects on Combustion" (Invited Review) Presented at the XIX Meeting of the Committee on Space Research (COSPAR), Philadelphia, Penn., June 1976 (in press).

33. Mullins, B. P. and Penner, S. S. "Explosions, Detonations, Flammability and Ignition", Pergamon Press, New York (1959).

34. Kono, M. et al. "Ignition of Gases by Two Successive Sparks" Combustion and Flame 27, 85-98 (1976).

(F) FIGURES

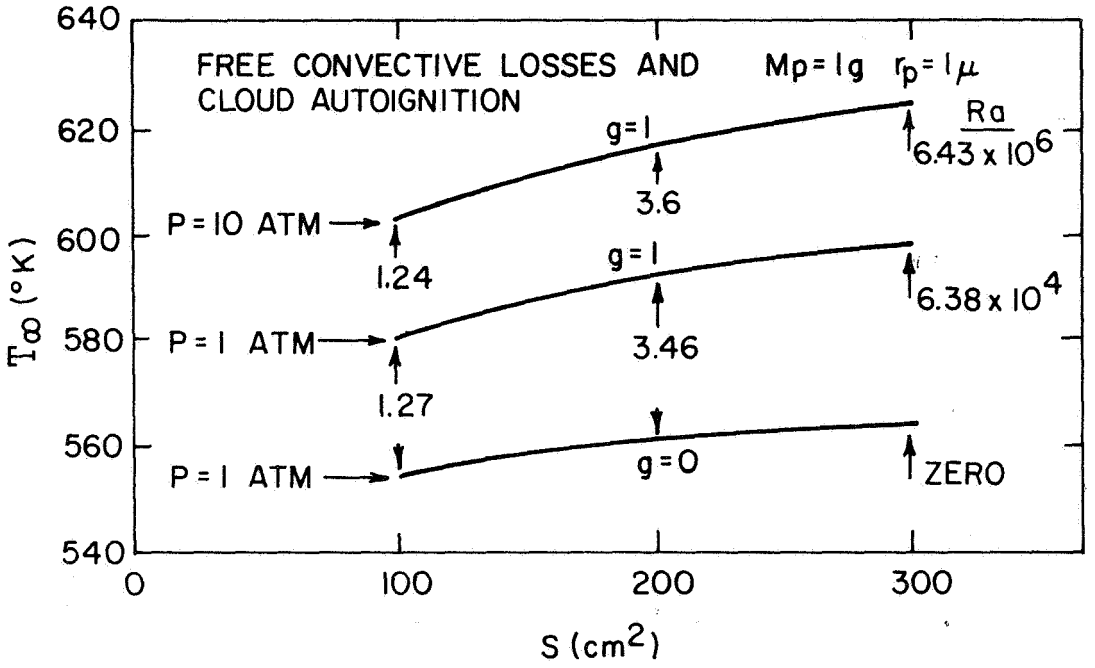

FIG. 1. OXIDATION OF ZIRCONIUM CLOUDS

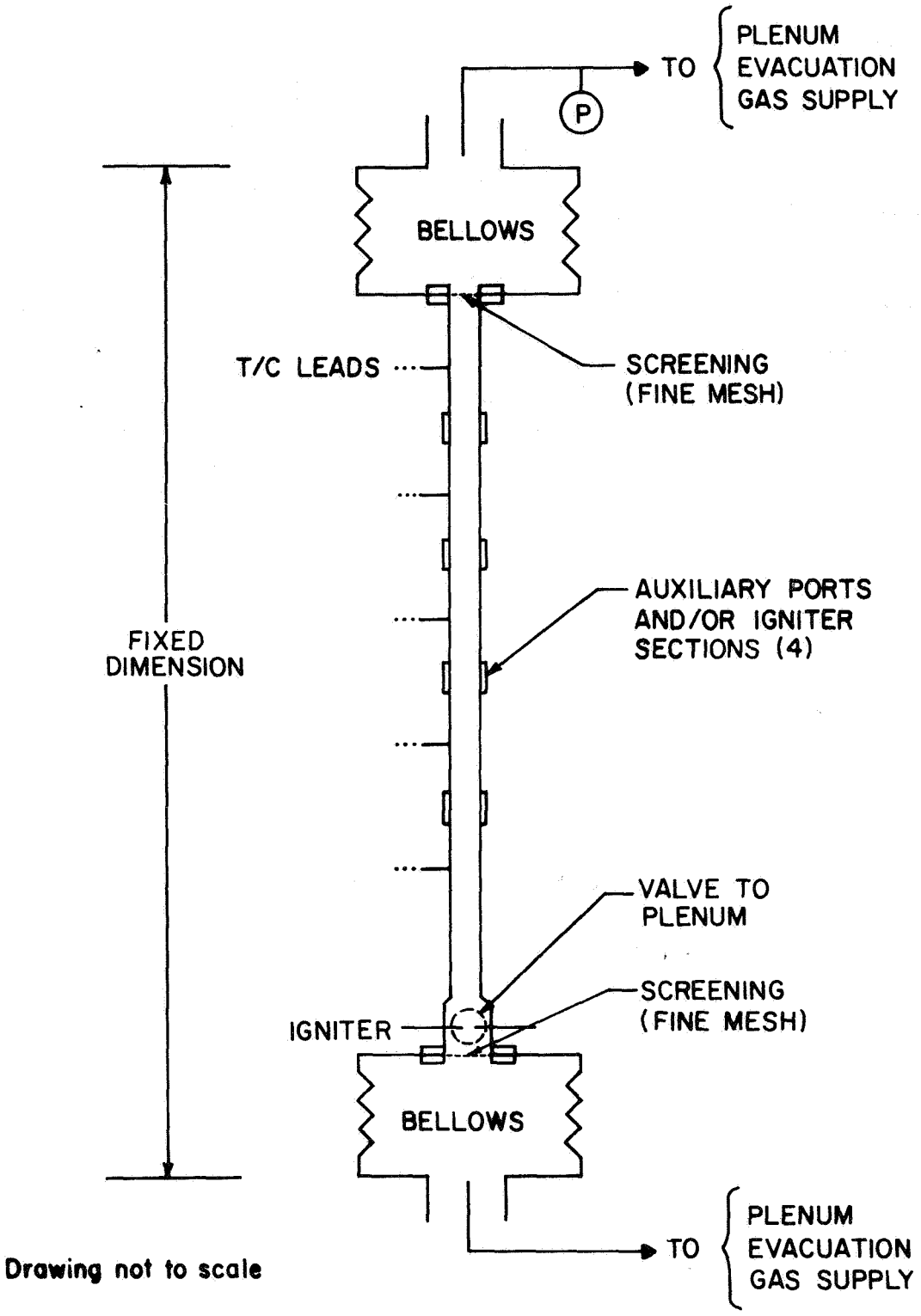

FIG. 2. PROPOSED EXPERIMENTAL SCHEMATICS

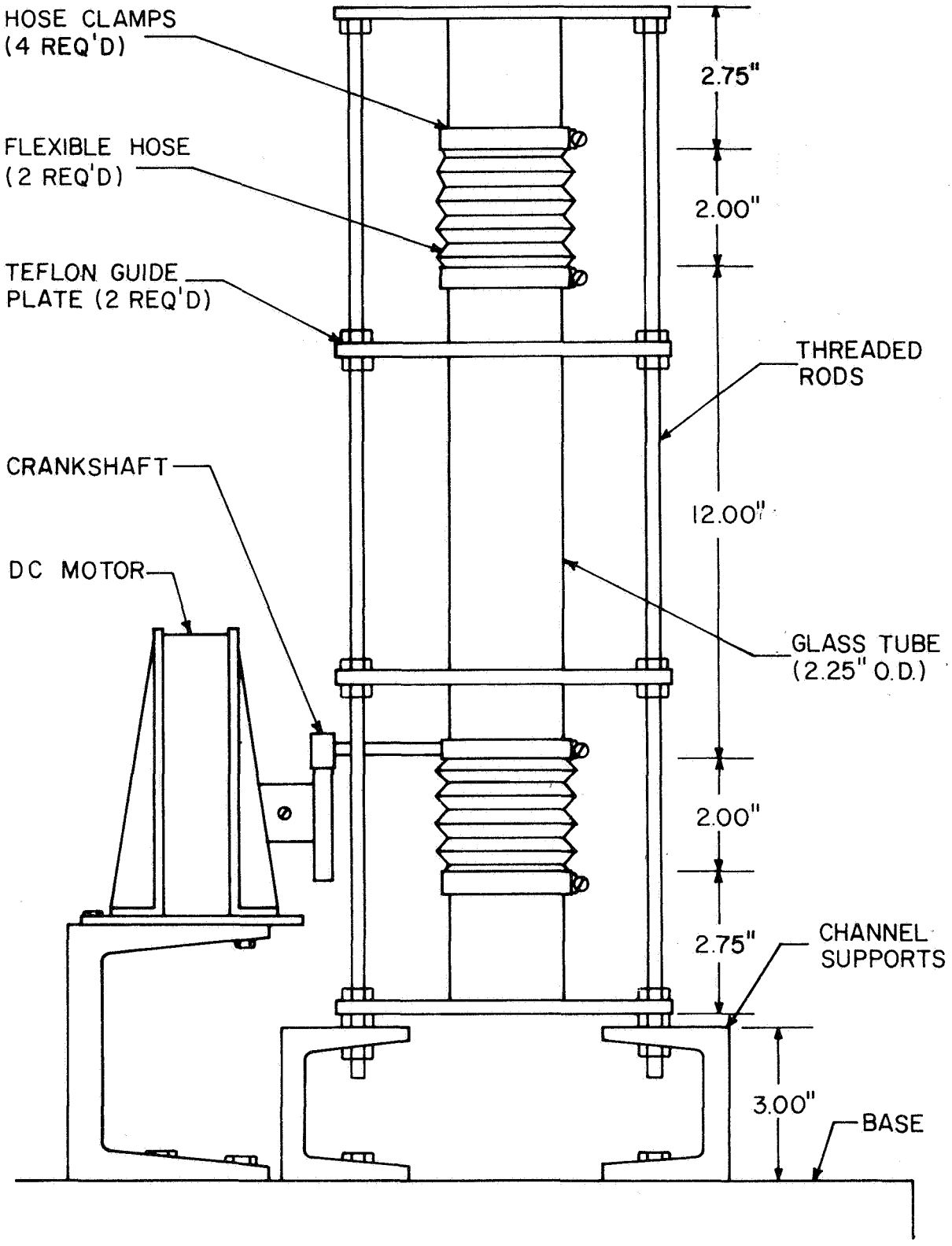

FIG. 3a. MIXER TEST APPARATUS

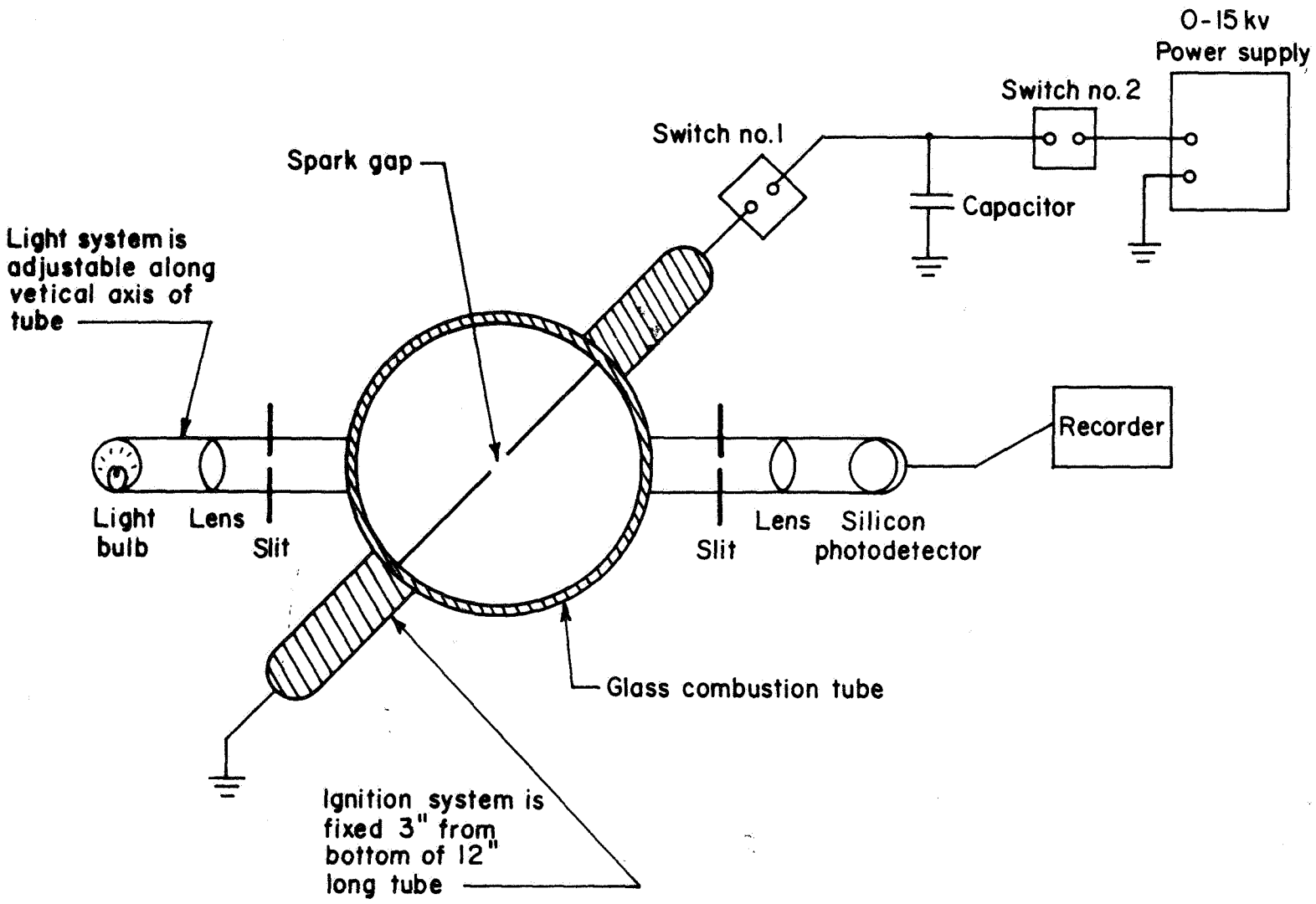

FIG. 3b. OPTICAL ABSORPTION AND FLAME IGNITION TEST APPARATUS

APPENDIX B

GRAVITATIONAL EFFECTS ON COMBUSTION*

A. L. Berlad†

State University of New York, Stony Brook, N.Y.

Abstract

Virtually all combustion phenomena of fundamental or practical interest are characterized by spatial nonisothermality. In a nonzero gravitational field, resulting body forces give rise to natural convection processes that may or may not have an important effect on combustion phenomena of interest. In some cases these effects may be trivial, and in others, crucial. This paper examines various prominent combustion phenomena with regard to the effects of gravity on normal (g=1) experimental observations, observational differences to be expected for g=0 (space-based) experimentation, and the possible scientific and technological values to be derived from such space-based research.

I. Introduction

The central scientific questions in combustion embrace the broad fields of single- and two-phase combustion; steady, unsteady, and oscillatory combustion; flame structure and stability; flame initiation and extinction; and composition and pressure limit phenomena. Combustion experiments, aimed at addressing these questions, generally are carried out under normal gravitational conditions (g=1) in Earth-based laboratories. Free convective energy and mass transport processes frequently obscure or transform the underlying g=0 combustion phenomena. Current combustion theory finds the representation of the roles of multiply coupled transport (free convection-condution-radiation) and chemical kinetic processes generally

---

*Published in Progress in Astronautics and Aeronautics, vol. 52, pp. 89-110. 1977. Presented as Paper No. D.3.6 at the COSPAR Symposium on Materials Sciences in Space, Philadelphia, Pa., June 9-10, 1976. This work was supported by NASA Grant NSG 3051 through the NASA Lewis Research Center.

†Professor of Engineering.

intractable. Thus we generally are employing substantially truncated combustion theory in the interpretation of g=1 combustion experiments.

Accordingly, a most compelling basis for space-based combustion studies (g=0) derives from unsatisfied scientific and societal needs for combustion information that Earth-based laboratories have not provided. Under reduced gravitational conditions, we can create stable, uniform arrays of combustible drops and particulates and then study their combustion behavior under (natural) convection-free conditions; we can attribute any asymmetries to the burning of a single particle or liquid drop to reasons other than "gravity"; we can discard the confusing requirement of distinguishing between observed "upward" and "downward" flame propagation without analytically describing their fundamental differences; we can assess the energy and mass transport mechanisms that influence flame oscillation and extinction phenomena in more systematic and tractable terms; the entire area of high-pressure combustion and extinction phenomena, so significant in current energy conversion and safety technologies, can be studied from a fundamental perspective. This paper reviews the effects of gravitational conditions on combustion phenomena and examines the necessity and utility of space-based experimental combustion studies in providing fundamental insights to problems of fundamental and applied importance.

II. Observation and Interpretation of Combustion Phenomena at Normal (g=1) Gravitational and (g=0) Conditions

A. Premixed Gaseous Flame Propagation and Extinction Limits

The most frequently made combustion observations involve the rates of "steady-state" flame propagation supported by a premixed gaseous medium. At g=1, quasisteady flames are observed as multidimensional flames propagating in long tubes, or as "flat" or "conical" flames stabilized on the lips of tubular burners. For a given size, shape, and temperature of apparatus, there exist limits of ambient temperature, pressure, fuel-oxidant ratio, and diluent concentration beyond which quasisteady flame propagation is not possible.[1-7] Beyond these extinction conditions, quasisteady flames cannot be established on burners or caused to propagate through long tubes. Reflecting the importance of heat-loss mechanisms (from flame to environment), the size, shape, and temperature of the experimental apparatus influence the extinction conditions. Special names have come into use for special extinction conditions. Flammability limits generally refer to the critical values of fuel-lean (or fuel-rich) composition, which, for a

5-cm-i.d. tube and a pressure of 1 atm, correspond to quasi-steady flame extinction. Quenching limits generally refer to the critical values of apparatus size which correspond to flame extinction. Pressure limits refer to critical lower (or upper) values of ambient pressure which correspond to flame extinction. It now is known that these various experimentally determined extinction limits are not independent. Figure 1[8,9] shows how pressure, quenching, and flammability limits represent special cases of a multidimensional extinction limit

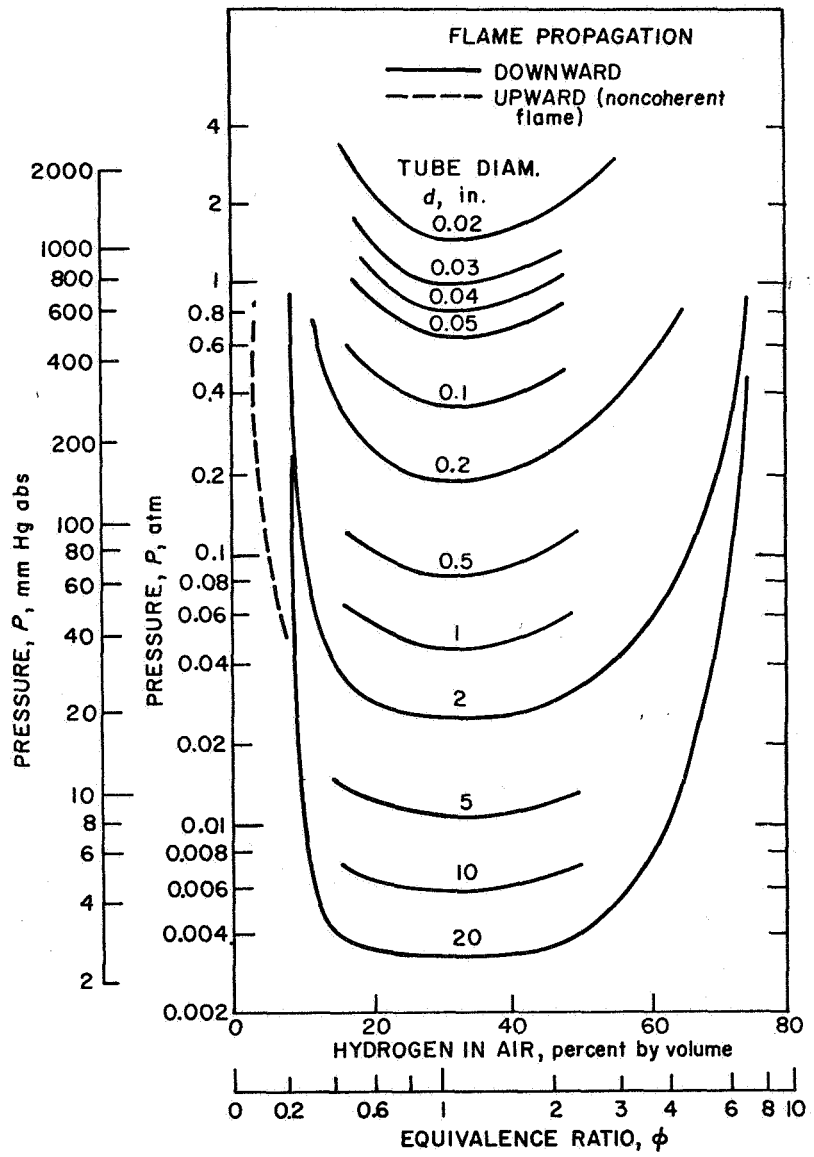

Fig. 1 Limits of flame propagation for H_2-air mixtures for various tubes.

diagram defined by the thermochemical and physical parameters of the problem.

A number of theories attempt to interpret these flame propagation and extinction data. Details and emphases vary, but certain central assumptions are shared. Quasisteady flame propagation is taken to be nonadiabatic, and losses of heat (and reactive species) from flame to finite-sized apparatus necessarily results. These loss mechanisms necessarily limit quasisteady flame propagation and prescribe extinction limits.

Gravitational effects influence observed premixed flame propagation and extinction phenomena in a number of ways. The nonuniform temperature-composition-density field of a flame is subject to gravitationally imposed body forces. These gravitational effects enter both as a mechanism important to flame structure and as a loss mechanism. Accordingly, flame propagation and extinction data (for g=1) can be affected substantially by "free convective effects." Striking examples of the effects of gravity on flame propagation and extinction include the following:

1) At g=1, upward flame propagation may be characterized by a flame propagation mode, flame structure, flame speed, and lean extinction limit different from those found for downward flame propagation. This is strikingly illustrated for the case of hydrogen-air flames,[8] where noncoherent upward flame propagation is observed in the neighborhood of the "lean limit" but not observed for downward propagation.

2) Convectively induced "noncoherent flames" as well as "flame balls" are observed for upward flame propagation, as the characteristic size of flame apparatus is increased.[3,10,11]

3) At g=1, convectively related multidimensional flame shapes (structures) are observed for hydrogen-air, methane-air, carbon monoxide-air, and other common/uncommon combustible systems. Diversity of flame shapes, structures, and propagational modes (oscillatory vs nonoscillatory, coherent vs noncoherent) is particularly common in the neighborhood of extinction limit conditions.

4) Upward flame propagation (at g=1) sometimes is associated with substantially incomplete combustion. Lovachev[3] and Markstein[12] have examined these phenomena in terms of flame front stability. These two analyses differ, but "free convective" processes are operative in either approach.

Despite the observed multidimensionality of (g=1) flame propagation and extinction phenomena, current "complete" theories of flame propagation and extinction are one-dimensional and ignore gravitational effects. Table 1 indicates that only a few simplified theories attempt to include free convective effects.

It follows, then, that flame propagation and extinction theories that may be applicable to (g=0) conditions have not been measured against g=0 data. As theories that ignore free-convective effects, they may not be applicable to observations made at g=1. For the g=1 observations that are influenced convectively, the truncated theories appear inadequate.

Thus, to establish the necessary theoretical bases for an understanding of flame propagation and extinction limits on a range $g \geq 0$, it is necessary that the observational facts be established on this range. For $g<1$, these observations are unavailable. It appears reasonable to expect that, once theory and observation can be brought together for g=0 (the simplest case theoretically, and the most unperturbed case experimentally), the inclusion of gravitational effects in "complete theories" of (g>0) flame propagation and extinction will be facilitated.

B. Premixed Two-Phase Flame Propagation and Extinction Limits

Flame initiation, propagation, and extinction processes supported by homogeneous mixtures of (premixed) finely divided combustible particulates (solid or liquid) in an oxidizing gaseous atmosphere are thought to be partly analogous to the previously discussed single-phase combustion phenomena.[16-18] That is, there are transport phenomena for which theoretical approaches, as well as experimental observations, closely parallel premixed gaseous systems. There may be support for this point of view for rarified clouds of particulates. For high-density clouds/arrays of particulates, array smoldering, initiation, fire-spread, and extinction processes are substantially different phenomena.[19,20] Nevertheless, that free convection influences the experimental observations of these phenomena (g=1) is either well established[5,19-22] or (in some cases) cannot be ruled out now. A broad range of combustible solids (e.g., cellulosic materials, corn starch, coal, synthetic fibers, lycopodium dust) and liquids (hydrocarbons, etc.) and oxidizing gases support these phenomena.

The differences between g=0 and g>0 two-phase combustion are thought to derive from body-force effects on heat and mass

Table 1. Premixed gaseous flames: quasisteady flame propagation and extinction limit analysis[a]

References	Losses	Dimensionality considered			Transport properties considered		
	Nonadiabatic	Multidimensional	1-dimensional or others	1-dimensionalized	Free convection	Radiation	Molecular conduction of heat & mass
Hirschfelder and Curtiss[6]	—	—	X	—	—	—	X
Spalding[7]	X	—	—	X	—	—	X
Berlad[13] and Yang[14]	X	—	—	X	—	X	X
Levy[15]	—	—	X	—	X	—	—
Lovachev[10]	—	—	X	—	X	—	—

[a]— Consideration absent in theory; X consideration provided in theory.

transfer. Thus, for example, arrays of large numbers of porous, solid, small fuel elements support combustion phenomena in a coupled manner. The coupling mechanisms include free-convective particle-gas and gas-boundary transport processes. Additional transport mechanisms include particle-particle and particle-gas radiative transport, molecular transport, and the radiation-conduction mechanisms coupling the gaseous medium losses to the boundaries.

Unfortunately, "complete" predictive theories of two-phase "homogeneous" flame propagation are largely undeveloped. The situation is aggravated by the fact that quasisteady flame propagation through "homogeneous clouds" of combustible particulates cannot be studied (at g=1) in a manner that is analogous to that employed for premixed gases. This experimental fact derives from the following:

1) Prior to the initiation of combustion experimentation, the physical and chemical characteristics of the combustible medium must be characterized.

2) A spatially uniform, unburned particle density, size distribution, and gas composition must be established and maintained prior to and during flame propagation and extinction measurements.

3) For gravitationally influenced systems, "gravitational settling" precludes the establishment of a uniform, quiescent particle cloud, either before or during experimentation. Where vigorous mixing techniques are used[23] to establish fairly uniform clouds (e.g., Fig. 2), substantial secondary flow patterns are established which correspond to complex, unknown transport of heat and mass.

For larger combustible particles (solids or liquids) in a gas, at g=1, some observers[16] report cases of clouds of burning (liquid) drops for which flame propagation is ascribed to the burning of individual (flame-surrounded) drops, with no apparent burning occurring in the interdroplet space. Such a flame-transport mechanism is strikingly different from one in which a cloud is taken to act collectively. Nevertheless, for $g \neq 0$, "free convection" and "gravitational settling" are essential processes to be considered.

Thus we find, for the case of flame propagation through clouds of particulates, at g=1, 1) that experimental homogeneity of a two-phase, quiescent particle-gas mixture is unobtainable (gravitational settling); 2) that unburned reac-

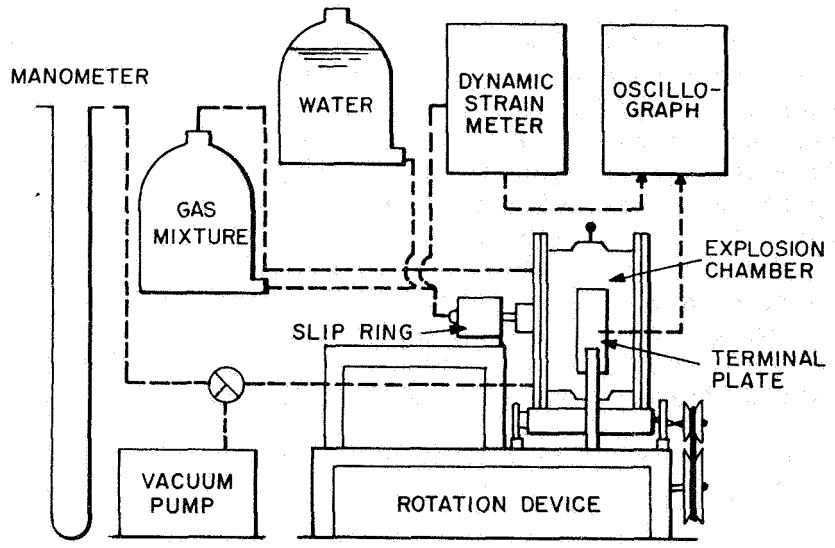

Fig. 2 Schematic of Ishihama and Enomoto[23] two-phase (rotating) explosion test apparatus.

tants have time-dependent characteristics; 3) that there exist convectively influenced flame transport and propagation mechanisms, made apparent through the substantial differences between observed upward and downward flame propagation characteristics; and 4) that particle-gas and gas-boundary heat-loss mechanisms are influenced convectively and ill-defined experimentally.

The identification of current (g=1) experimental difficulties suggests the important impact of obtaining experimental particle-gas combustion data in space. In a space environment (g≈0), 1) "settling" does not defeat our ability to create and maintain a uniform cloud of unreacted particles prior to and during a combustion experiment; and 2) "free convection" does not affect the flame microstructure (in the neighborhood of individual particles) or the flame macrostructure (gas-cloud-wall interactions).

From an experimental point of view, planned g=0 flame propagation studies promise an initially quasisteady gas-particle cloud (characterizable combustion system) and reproducible experimental results. Although we have been discussing flame propagation and extinction phenomena, similar implications obtain for other combustion studies aimed at delineating 1) particle-cloud autoignition temperatures; and 2) critical particle concentration or oxygen index for autoignition, spark ignition, flame propagation speed, flame shape,

and flame structure, homogeneous "oscillatory" phenomena having long characteristic times.

Data (for g=0) will provide a more meaningful set of experimental bases for our understanding of two-phase combustion processes. They permit the construction, testing, and verification of theoretical formulations that are simpler and more tractable than those to be required (ultimately) by (g=1) experimentation. Together, a body of (g=0) data and suitable theory may be built upon for subsequent (g>0) studies aimed at addressing the multiplicity of effects which derive from gravitationally induced processes.

C. Combustion Phenomena in Nonflowing Single-Phase Systems

A large variety of combustion phenomena are observed experimentally in nonflowing, premixed combustible systems. For premixed gaseous systems (observed at g=1), these phenomena include the classic "homogeneous slow reaction," "autoignition" or "explosion," "cool flame", and other oscillatory combustion processes, as well as phenomena characterized as "multistage ignition" and "unsteady combustion." Experiment and theory for such nonflowing systems have been reviewed previously.[24]

In all of the aforementioned phenomena, transport of heat and mass play crucially definitive roles.[24] Criticality conditions for "autoignition" involve thermal interactions (as well as free radical interactions) with apparatus walls. "Cool flame," "thermokinetic," or purely "kinetic" oscillations involve similar wall interactions. As experimental apparatus sizes are increased, "free convective" transfer of heat and mass can dominate the other transport processes and render experimental observations (at g=1) difficult or impossible to interpret. For a modest-sized apparatus (of diameter) in which combustible self-heating is sustained, the Rayleigh number variation with hydrocarbon-oxygen stoichiometry is shown in Fig. 3, for a ΔT of $1^{\circ}K$. For many thermokinetic oscillations or autoignition phenomena, ΔT values of one to two orders of magnitude higher are encountered.[24] Inasmuch as critical Rayleigh numbers for free-convective onset are of the order $\leq 10^3$, it follows that, at g=1, 1) substantial free convective effects are encountered for highly exothermic processes and/or in large apparatuses, and/or at high pressures; 2) current theory[24] of autoignition and/or oscillatory combustion generally does not incorporate free convective effects; and 3) as a result of the experimental and theoretical shortcomings just noted, combustion data in nonflowing gaseous media are studied incompletely and represented inadequately.

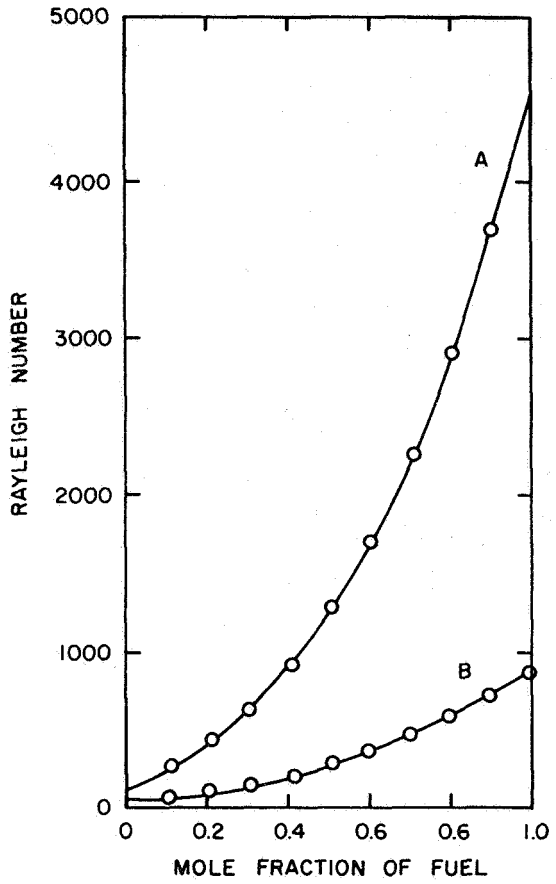

Fig. 3 The variation of Rayleigh numbers for a difference of 1°K between the center and wall of the reaction vessel. Curve A: 200 Torr = p_T for iso-octane/oxygen; curve B: 100 Torr = p_T for n-heptane/oxygen.

These facts may be illustrated through examination of the one-dimensionalized (simplified) forms[24] of the conservation equations generally taken to be appropriate to these systems:

$$\rho c_v \frac{\partial T}{\partial t} = \frac{d}{dx_1} \lambda \frac{dT}{dx_1} + \frac{dI}{dx_1} + \sum_{j=1}^{r} R_j \Delta_j - L_2 \tag{1}$$

$$\frac{\partial c_i}{\partial t} = \frac{d}{dx_1} D \frac{dc_i}{dx_1} + \sum_{j=1}^{r} \dot{c}'''_{ij} - L_{D,2} \tag{2}$$

where c_i is the number of moles (per unit volume) of the ith chemical species, for i = 1, 2, . . ., n; c_{ij}''' is the molar rate of production (per unit volume) of the ith chemical species by the jth kinetic process, where j = 1, 2, . . ., r; c_v is specific heat at constant volume; D is the diffusion coefficient; I is the local (thermal) radiative flux density; k_j is the rate constant for the jth kinetic process; L_2 is the loss function (for a two-dimensional system) in the x_2 direction; R_j is the molar reaction rate corresponding to the species and energy release rate specified by Δ_j; T is absolute temperature; Δ_j is the molar heat of reaction for the jth unidirectional reaction; and λ is thermal conductivity.

Clearly, (1) and (2) take no specific account of free convective effects, even though transport of heat and mass are essential processes under consideration. In fact, it is clear that (1) and (2) are more appropriate to a g=0 situation than to a general g>0 set of experimental conditions.

The role of heat and mass transport in the determination of oscillatory combustion processes is illustrated with the aid of (g=1) data[25] employed to construct Fig. 4. Involved in the theory of kinetic oscillations for $CO-O_2$ reactions[24-27] is the

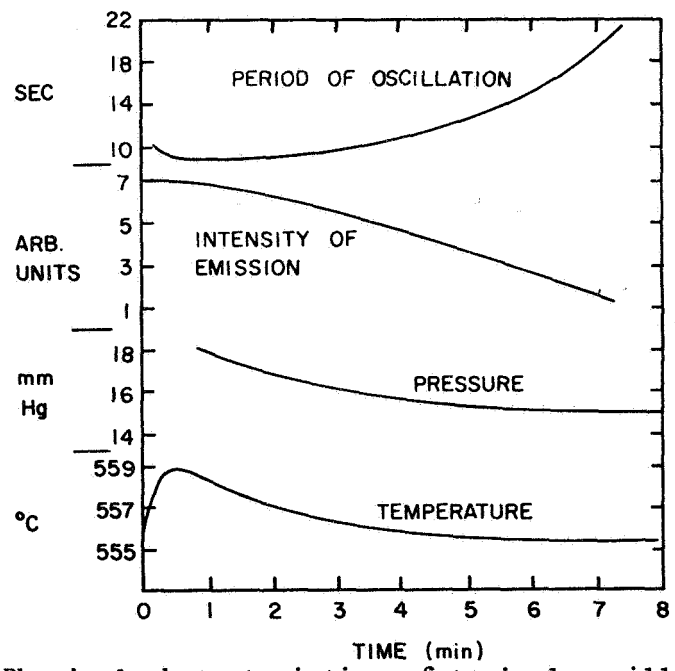

Fig. 4 Physical characteristics of typical oscillatory run ($CO-O_2$ reaction). RV1, T_i = 554.3°C, P_i = 18.8 torr. Intensity of emission is the maximum oscillograph height of each flash in arbitrary units.[25]

transport of O atoms to walls. Inasmuch as this time-dependent process is almost isothermal during a given cycle, neglect of free convective processes (at g=1) appears justified and leads to calculated trajectories[27] such as those illustrated in Fig. 5. Current theory and experiment suggest that this ($CO-O_2$) oscillatory process should be virtually unaffected by gravitational field. No g=0 confirmation of this has been made.

For thermokinetic oscillations, heat transfer to walls plays a major role,[28,29] and the reaction process (hydrocarbon-oxygen) is known experimentally to be highly nonisothermal. Nevertheless, theory[29] at g=1 appears to ignore the role of free convective effects on the oscillatory stability limits and on the oscillatory trajectories associated with the thermokinetic oscillations. For these thermokinetic processes, substantial Rayleigh numbers may be encountered,[28-32] and substantial differences between g=0 and g=1 observations may be expected. For completely analogous reasons, ignition delays, multiple ignitions, etc., in closed systems also may be characterized by large Rayleigh numbers and free convective effects at g=1.

D. Combustion Phenomena in Nonflowing Two-Phase Systems

In Sec. II.B, the roles of "gravitational settling" and "free convection" in g=1 experimentation were discussed. For

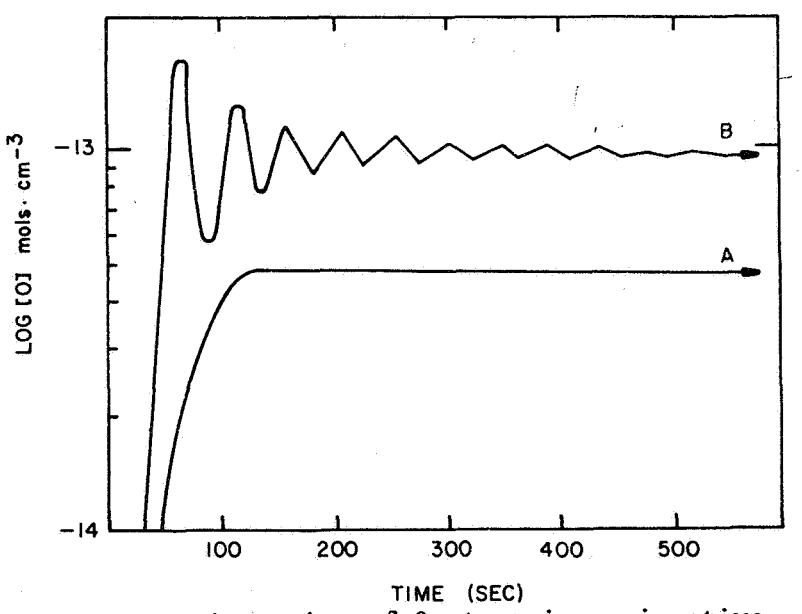

Fig. 5 Trajectories of O atoms in an inactive kinetic state.[27]

nonflowing two-phase systems, the same physical processes complicate the experimental results. Theory, conceptually simpler than flame propagation theory, still is useful deficiently to a representation of g=1 observations. Consider the elements of a simple (thermal) particle-cloud autoignition theory. Such a theory may be constructed[30] along lines that closely parallel those developed for pure gas-phase processes. The thermokinetic stability[24] of a cloud is described in terms of the kinetic (heat release) processes in the neighborhood of a typical particle, the heat and mass transfer rates in the neighborhood of a typical particle, and the collective heat-transfer processes involving the two-phase cloud and the boundaries. Accordingly, two energy conservation equations are written, one for the particles and one for the gaseous medium. These take the form[30]

$$m_p c_p (dT_p/dt) = S_p[\dot{q}''_p - \alpha_1(T_p - T_g) - L_r] \tag{3}$$

$$m_g c_g (dT_g/dt) = S_p[N\alpha_1(T_p - T_g) + (1 - \delta_g)L_r] - \alpha_2 S(T_g - T_\infty) \tag{4}$$

where m_p is particle mass; M_p is the summed mass of all particles; M_g is the total mass of gas in the system; c_p is particle specific heat at constant volume; c_g is gas specific heat at constant volume; T_p is characteristic particle temperature; T_g is characteristic gas temperature; S is the surface area of container boundaries; S_p is the surface area of a particle; N is the number of particles; α_1 is the particle-gas heat-transfer coefficient; α_2 is the gas-container heat-transfer coefficient; L_r is radiative loss rate per particle; and δ_g is optical transmissivity of gas.

One may employ the method of the phase plane[24,30,31] to deduce the appropriate criticality conditions for cloud autoignition. It is clear that α_1 and α_2 are functions of the Grashof number and may become particularly different from the molecular transport limiting values as particle sizes become larger and as the apparatus (cloud) size becomes larger, given a normal (g=1) gravitational field.

Although kinetic data are not as available as one would hope, calculations of autoignition conditions for metallic clouds have been carried out. Results for zirconium oxidation are shown in Fig. 6. For a total particle mass of 1 g (M_p) and a particle size of 1 μ, the free convective effects (for g=1) implicit in α_z are substantial. Figure 6 results imply that 1) gravitational effects on particle-cloud autoignition

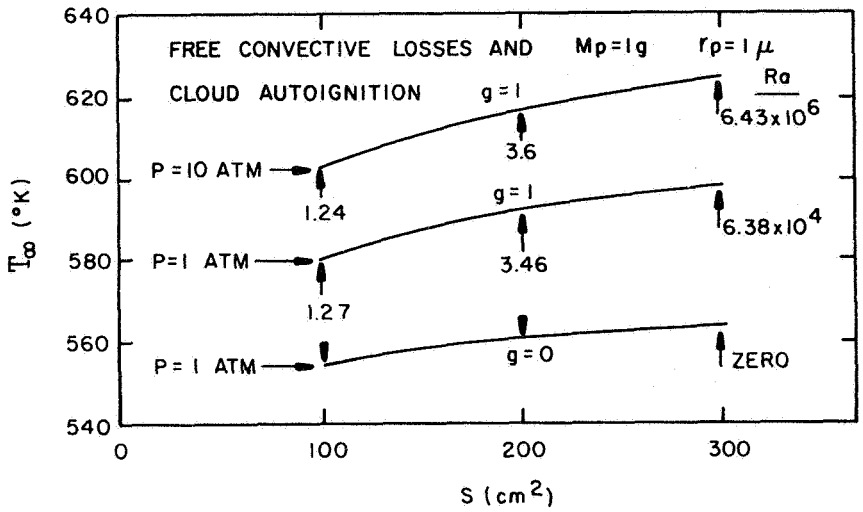

Fig. 6 Oxidation of zirconium clouds.[30]

phenomena can be substantial; 2) high-pressure flame propagation and extinction (as well as autoignition) for both gas phase and particle cloud flames may be changed dramatically for g=0 environments (consistent with the data and analyses given by Lovachev[3] in discussing high-pressure extinction of pure gas phase flames); and 3) high-pressure combustion studies (at g=1) may be so convectively dominated as to inhibit importantly our ability to study the other flame processes (which appears to be the case for single-phase as well as two-phase systems).

E. Diffusion Flame Phenomena in Flowing Systems

The (g=0) literature pertaining to laminar gas diffusion flames has been reviewed previously.[5] Particularly interesting are the results[33] that show the transient behavior of laminar gas jet diffusion flames as (g=1) conditions are transformed (at the NASA Lewis Research Center, Drop Tower Facility) to (g=0) for several seconds. Figures 7 and 8, taken from Ref. 33, show how either extinction or a different diffusion flame structure results in the transformation from (g=1) to (g=0).

An extensive analytical study[34] of axisymmetric laminar-jet diffusion flames provides good agreement for (g=1). Careful comparison with (g=0) data awaits more extensive observation of flame structures under conditions of weightlessness.

Recent studies by Lavid and Berlad[35] examine the effect of gravity for cases where the buoyant force is transverse to

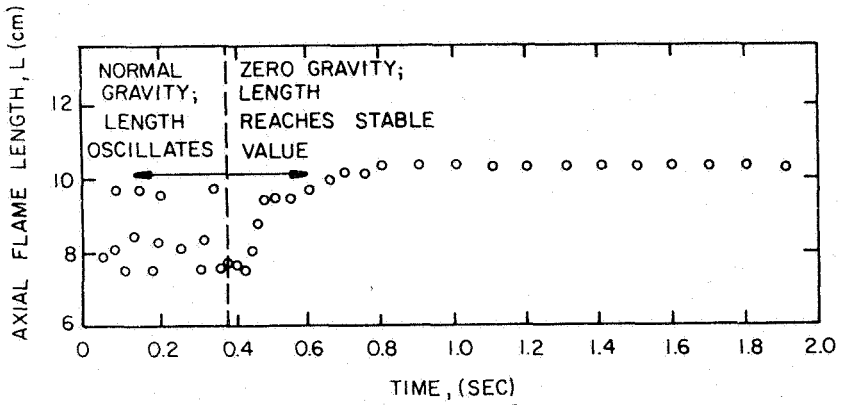

Fig. 7 Typical time profile of axial flame length upon entry into weightlessness.[33]

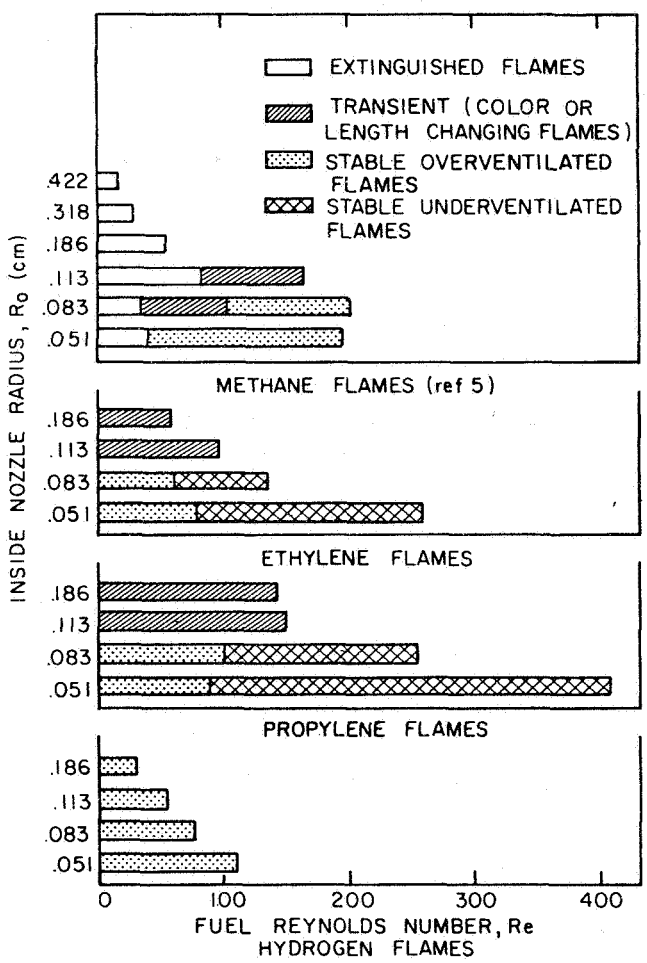

Fig. 8 Flame conditions encountered in zero gravity as function of flow.[33]

the flow direction, in boundary-layer flow. It is concluded that buoyancy does play an important role in boundary-layer diffusion flames. For fuel injected at (or through) the surface of a flat plate and burning in an oxidizing boundary-layer flow, these results prescribe 1) the acceleration of the boundary-layer flow (velocity overshoot), and 2) a decrease in the flame "standoff" distance for g=1.

The assumed flow model is indicated in Fig. 9, and the "velocity overshoot" results (calculated) are indicated in Fig. 10 ("aiding flows" correspond to a flat plate facing upwards, and "opposing flows" corresponds to a flat plate facing downwards). Results show that local boundary-layer flow is accelerated (aiding flows) or decelerated (opposing flows) relative to the corresponding gravity-free forced convection flow. Although theoretical predictions are in agreement with currently available experimental data,[36] zero-g studies needed for full evaluation of these analyses are not available.

There exists a great diversity of possible combustible flow (premixed or unpremixed) systems. Data and analyses available to date indicate that gravitational effects are to be expected. The zero-g data necessary to establish a baseline for such future studies currently are not available.

III. Avenues of Combustion Experimentation at Reduced Gravitational Conditions

For single- and two-phase combustible systems, gravitationally induced body forces result in natural convective processes, which, in turn, modify the underlying (g=0) combustion

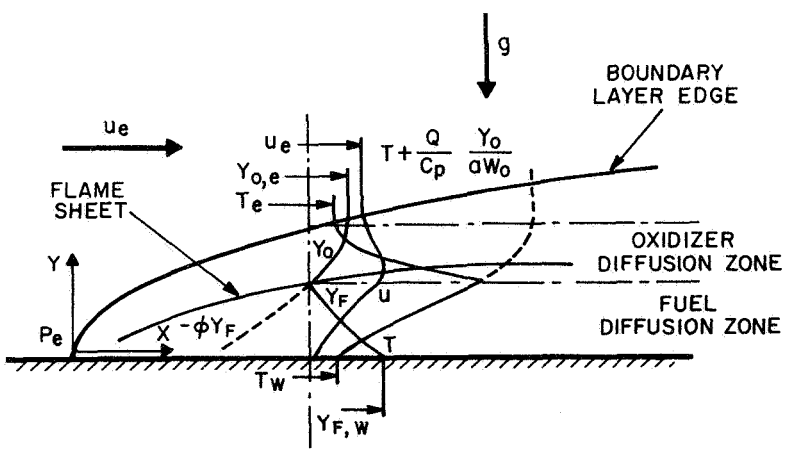

Fig. 9 Diffusion flame boundary-layer flow.[35]

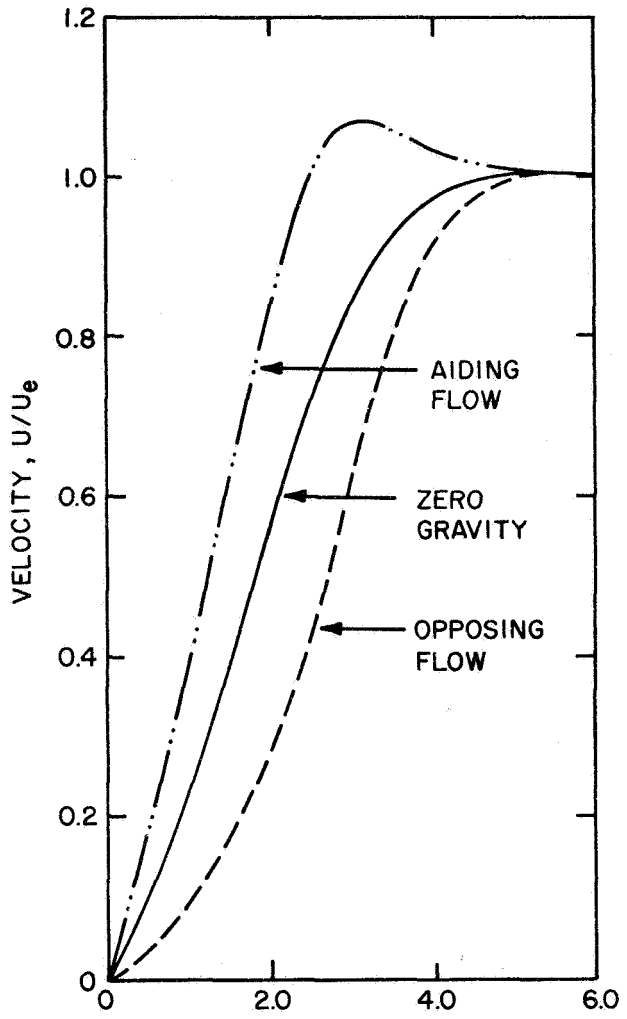

Fig. 10 Boundary-layer thickness η.[35]

phenomena. This fact generally engenders the following situation:

1) There is a set of observed experimental results, characteristic of Earth-bound reality, in which free convection plays a significant (frequently dominant) role.

2) There is a literature of highly truncated theoretical approaches to the representation of g=1 combustion phenomena. Typically,[5] either real chemical kinetic rate processes are ignored (taken to be infinitely fast), or free convective effects are ignored (taken not to exist).

3) Where free convective effects are taken not to exist (in a theoretical representation), the corresponding g=0 experimentation has not been performed. Accordingly, there generally is no basis for comparison of the most rudimentary theory (g=0) with the most uncomplicated combustion phenomena (g=0).

4) In the absence of verified g=0 experiment and theory, the systematic incorporation of g>0 experimental data, and development of associated theory, is inhibited severely. It is evident that a) appropriate g=0 experimental data would permit direct comparison of complete (convection-free) theory with experiment; and b) complete, verified, convection-free theory then may be used as a basis for the development of more acceptable (more complete) combustion theory for g>0 conditions. In particular, our understanding of the all-important (g=1) data would be enhanced greatly.

Facilities, current and anticipated, for combustion experimentation at reduced gravitational conditions include drop towers, special aircraft, and the forthcoming Space Shuttle Laboratory.[5] Although drop tower facilities have played an important role (e.g., Refs. 5 and 33) in previous g<1 experimentation, they impose severe limitations on the size and time scales for combustion experimentation. Typically, experiments in drop towers are limited to time scales of less than 5 sec and total space allowances (including auxiliary instrumentation) of less than 5 ft. Many important combustion experiments cannot be executed properly under these conditions. These include[5] such important phenomena as autoignition of single-phase and two-phase combustibles, thermokinetic oscillations and cool flames, flame propagation and extinction in single-phase and two-phase combustible systems, stability and structure of smoldering arrays of particulates, high-pressure flame propagation and extinction processes, and others. The small times available for drop tower experimentations are particularly limiting.

The Space Shuttle Laboratory offers a boxcar-sized facility for long-time (hours/days) combustion experimentation. One may list the diverse areas of combustion experimentation where pivotal observations are needed, which have not been obtainable otherwise: 1) autoignition for large (and/or high-pressure) single-phase (or two-phase) premixed combustible systems; 2) single (or two-phase) premixed flame propagation and extinction limits over a range of apparatus size and pressures; 3) noncoherent flame propagation; 4) upper pressure limit combustion phenomena and ignition, propagation, and

extinction phenomena in the neighborhood of upper pressure limits; 5) cool flames in large premixed gaseous systems; 6) burning and extinction of individual drops or particles, over large pressure ranges; 7) two-phase combustion phenomena involving large liquid-gas or solid-gas interfaces; 8) radiative ignition of solids and liquids; 9) pool burning and flame propagation over liquids; 10) flame spread and extinction over solids; 11) smoldering of solid combustibles, and the associated transition to flaming (or extinction); 12) laminar gas jet combustion; 13) coupling (or decoupling) of convectively induced turbulence involved in various combustion phenomena; and 14) transient responses of combustible systems to time variations in gravitational field strengths.

The preceding tabulation of needed Space Shuttle experimentation is extensive. No less extensive is the corresponding theory and analysis. The anticipated experimental observations will guide and facilitate the development of verifiable theory, for g=0 as well as for g>0.

References

[1]Lewis, B. and Von Elbe, G., Combustion, Flames and Explosions of Gases, Academic Press, New York, 1961.

[2]Coward, H. F. and Jones, G. W.,"Limits of Flammability of Gases and Vapors," Bull. 503, 1952, U. S. Bureau of Mines.

[3]Lovachev, L. A., Babkin, V. S., Buner, V. A., V'Yun, A. V., Krivulun, V. N. and Banatov, A. N., "Flammability Limits: An Invited Review," Combustion and Flame, Vol. 20, April 1973, p. 259.

[4]Anon. Rep. 130, 1957, NACA.

[5]Berlad, A. L., Huggett, C., Kaufman, F., Markstein, G., Palmer, H. B., and Yang, C. H., "Study of Combustion Experiments in Space," CR-134744, Nov. 1974, NASA.

[6]Hirschfelder, J. O., Curtis, C. F., and Bird, R. B., The Molecular Theory of Gases and Liquids, Wiley, New York, 1954.

[7]Spalding, D. B., Some Fundamentals of Combustion, Academic Press, New York, 1955.

[8]Drell, I. L. and Belles, F. E., "Survey of Hydrogen Combustion Properties," Rep. 1383, 1958, NACA.

[9]Potter, A. E., Jr. and Berlad, A. L., "The Effect of Fuel Type and Pressure on Flame Quenching," Sixth Symposium (International) on Combustion, Reinhold Publishing Corp., New York, 1957, p. 27.

[10]Lovachev, L. A., "Theory of the Propagation Limits of a Flame in a Gas," Akademii Nauk SSSR, Doklady, Vol. 193, July 1970, p. 570 (English), p. 634 (Russian).

[11]Strehlow, R. A., Fundamentals of Combustion, International Textbook Co., Pennsylvania, 1968.

[12]Markstein, G. H., Nonsteady Flame Propagation, AGARDograph 75, Pergamon Press, New York, 1964, pp. 9-12.

[13]Berlad, A. L. and Yang, C. H., "A Theory of Flame Extinction Limits," Combustion and Flame, Vol. 4, December 1960, p. 325.

[14]Yang, C. H., "Burning Velocity and the Structure of Flames Near Extinction Limits," Combustion and Flame, Vol. 5, June 1961, p. 163.

[15]Levy. A., "An Optical Study of Flammability Limits," Proceedings of the Royal Society (London), Vol. A283, January 1965, p. 134.

[16]Mizutain, Y. and Ogasawara, M., "Laminar Flame Propagation in Droplet Suspension of Liquid Fuel," International Journal of Heat and Mass Transfer, Vol. 6, June 1965, p. 921.

[17]King, M. K., "Prediction of Laminar Flame Speeds in Boron-Oxygen-Nitrogen Dust Clouds," XV Symposium (International) on Combustion, 1974, p. 467.

[18]Mason, W. E. and Wilson, M. J. G., "Laminar Flows of Lycopodium Dust in Air," Combustion and Flame, Vol. 11, June 1967, p. 195.

[19]Pagni, P. J. and Peterson, T. G., "Flame Spread Through Porous Fuels," XIV Symposium (International) on Combustion, 1973, p. 1099.

[20]Berlad, A. L. and Krishna, C. R., "Transport Mechanisms in Fire Spread and Extinction," Clay Preston Butler Conference on Experimental Methods in Fire Research, edited by A. M. Kanury and N. J. Alvares, 1975, Stanford Research Institute.

[21]DeRis, J., Kanury, A. M., and Yuen, M. C., "Pressure Modeling of Fires," XIV Symposium (International) on Combustion, 1973, p. 1133.

[22]Markstein, G. H. and DeRis, J., "Upward Fire Spread Over Textiles," XIV Symposium (International) on Combustion, 1973, p. 1085.

[23]Ishihama, W. and Enomoto, H., "New Experimental Method for Studies of Dust Explosions," Combustion and Flame, Vol. 21, October 1973, p. 177.

[24]Berlad, A. L., "Thermokinetics and Combustion Phenomena in Nonflowing Gaseous Systems: An Invited Review," Combustion and Flame, Vol. 21, October 1973, p. 275.

[25]McCaffrey, B. J. and Berlad, A. L., "Some Observations on the Oscillatory Behavior of Carbon Monoxide Oxidation," Combustion and Flame, Vol. 26, February 1976, p. 77.

[26]Yang, C. H. and Berlad, A. L., "Kinetics and Kinetic Oscillation in Carbon Monoxide Oxidation," Journal of the Chemical Society, Faraday Transactions I, Vol. 70, September 1974, p. 1661.

[27]Yang, C. H., "On the Explosion, Glow and Oscillation Phenomena in the Oxidation of Carbon Monoxide," Combustion and Flame, Vol. 23, September 1974, p. 97.

[28]Gray, P., Jones, D. T., and MacKinven, R., "Thermal Effects Accompanying Spontaneous Ignition in Gases," Proceedings of the Royal Society (London), Vol. A325, November 1971, p. 175.

[29]Yang, C. H. and Gray, B. F., "On the Slow Oxidation of Hydrocarbon and Cool Flames," Journal of Physical Chemistry, Vol. 73, October 1969, p. 3395.

[30]Berlad, A. L. and Krishna, C. R., "Gravitational Effects on the Autoignition of Particle Clouds," Eastern States Section, The Combustion Institute, November 1975, Upton, N.Y.

[31]Yang, C. H. and Gray, B. F., "The Determination of Explosion Limits from a Unified Thermal and Chain Theory," XI Symposium (International) on Combustion, The Combustion Institute, Philadelphia, Pa., 1967, p. 1099.

[32]Fine, D. H., Gray, P., and MacKinven, R., "Thermal effects Accompanying Spontaneous Ignition in Gases: I. An Investiga-

tion of the Heating Effects which Accompany the Rapid Admission of Inert Gas to an Evacuated Vessel," Vol. A316, April 1970, p. 223; also "Thermal Effects Accompanying Spontaneous Ignition in Gases: II. The Slow Exothermic Decomposition of Diethyl Peroxide," Vol. A316, April 1970, p. 241; also "Thermal Effects Accompanying Spontaneous Ignition in Gases: III. The Explosive Decomposition of Diethyl Peroxide," Vol. A316, April 1970, p. 255.

[33]Haggard, J. B. and Cochran, T. H., "Hydrogen and Hydrocarbon Diffusion Flames in a Weightless Environment," TN D-7165, Feb. 1973, NASA.

[34]Edelman, R. B., Fortune, O., and Weilerstein, G., "Analytical Study of Gravity Effects on Laminar Diffusion Flames," CR-120921, Feb. 1972, NASA.

[35]Lavid, M. and Berlad, A. L., "Gravitational Effects on Chemically Reacting Laminar Boundary Layer Flows over a Horizontal Flat Plate," XVI Symposium (International) on Combustion, Aug. 1976, Cambridge, Mass.

[36]Hirano, T., Iwai, K., and Kanno, Y., "Measurements of the Velocity Distribution in the Boundary Layer over a Flat Plate with a Diffusion Flame," Astronautica Acta, Vol. 17, October 1972, p. 811.

APPENDIX C

FLUID AND COMBUSTION DYNAMICS*

A. L. Berlad

State University of New York
Stony Brook, New York 11794

Combustion phenomena which occur at normal gravitational conditions ($g = 1$) are frequently influenced, or dominated, by gravitationally induced natural convection processes. It is not surprising, then, that $g \simeq 0$ combustion studies, typically carried out in drop towers, provide observations [1-6]† that are substantially different from those generally observed at $g = 1$.

Some combustion experiments at reduced gravitational conditions have been carried out during the past several decades. They have been frequently motivated by the needs for fire safety information for space flight--and constrained by the physical times available (less than 10 seconds, generally) for experimentation.

More recently [6,7], we have come to understand that the most compelling bases for $g = 0$ combustion studies derive from unsatisfied scientific and societal needs for combustion information that earth-based laboratories have not provided. The central question in combustion embraces an understanding of single and multiphase combustible reactants; steady, unsteady, and oscillatory combustion; flame structure and stability; flame initiation and extinction; and composition and pressure limit phenomena. $g = 1$ experiments aimed at addressing these questions frequently sustain natural convective energy and mass transport processes which tend to obscure or transform the underlying $g = 0$ phenomena. $g = 1$ combustion theory is confronted with frequently intractable representations which must include the complexities of the multiply-coupled transport processes (natural convection-conduction-radiation) with details of chemical kinetics and flow.

Thus, we may be confronted with intractable $g = 1$ theory, to be applied to three dimensional $g = 1$ combustion phenomena. The following are the most common approaches to dealing with such difficulties:

(a) The theorist ignores all gravitational effects. Theory is then less intractable. It may or may not represent adequately the $g = 1$ observations.

(b) The theorist assumes that natural convection is the only operative transport process and that chemical kinetic rates are infinitely fast. Again, theory may or may not represent adequately the $g = 1$ observations.

---

*Published in Applications of Space Flight in Materials Science and Technology, NBS Special Publication 520, 1978.

†Figures in brackets indicate literature references at the end of this paper.

(c) The experimentalist attempts to select those experiments (e.g., upwards or downwards flame propagation--but not sidewise) which provide an axis of symmetry for free convective effects. This is not possible, frequently (e.g., flame spread over a pool of combustible liquid, or an array of cellulosic particulates, etc.).

(d) The experimentalist attempts to select those experiments for which free convective effects are dominant over all other transport processes, and for which the "flame sheet approximation" (i.e., infinitely fast chemical kinetics) is acceptable. This is not possible, frequently, particularly for ignition limits and flame propagation limits.

(e) The experimentalist hopes to attack all problems of compelling theoretical importance. This is not possible, frequently. Consider for example the issues raised in attempting, at $g = 1$, to create a uniform, quiescent, stationary cloud of combustible particulates. Then to observe one or more of the phenomena of:

(i) autoigintion,

(ii) ignition and the transformation to quasi-steady flame propagation, and

(iii) the transformation of quasi-steady flame propagation to extinction.

Such clouds cannot be created and maintained at $g = 1$. In effect, not all problems of compelling theoretical interest have been found to be "doable" at $g = 1$.

I believe it correct to assert that we often employ substantially truncated combustion theory in the interpretation of an unfortunately limited range of ($g = 1$) experiments. It may be argued that limited or not, $g = 1$ combustion observations are the reality we live with and that $g = 1$ is the reality we must represent and understand. This may be. But nothing in the latter argument provides guidance as to the best approach to such understanding.

In recent years, a number of combustion areas of experimentation have been identified as promising to provide important insights into the underlying combustion processes for the case where $g = 0$. It can be argued that $g = 0$ combustion experimentation, adequately represented and theoretically understood can be used [6] as a basis for better understanding the complexities of combustion where $g > 0$. The Space Shuttle Laboratory could provide the laboratory conditions for such experimentation. A list of some pivotal areas for combustion observations (which may be provided by a Space Shuttle Laboratory and which have not been obtainable otherwise) includes:

(a) single (and two phase) premixed flame propagation and extinction limits over a range of apparatus size and pressures;

(b) noncoherent flame propagation and extinction;

(c) autoignition for large (and/or high pressure) single-phase (or two-phase) premixed combustible systems;

(d) upper pressure limit combustion phenomena and ignition, propagation and extinction phenomena in the neighborhood of upper pressure limits;

(e) oscillatory combustion associated with the hydrocarbon-oxygen and with the carbon monoxide-oxygen systems;

(f) two-phase flame spread and extinction phenomena involving large liquid-gas or solid-gas interfaces;

(g) radiative ignition of solids and liquids;

(h) pool burning;

(i) smoldering of solid combustibles and the associated transition to flaming (or extinction);

(j) laminar gas jet combustion;

(k) coupling (or damping) of convectively-induced turbulence involved in various combustion phenomena; and

(l) transient responses of combustible systems to time variations in gravitational field strengths.

References

[1] Kumagai, S. and Isoda, H., Combustion of fuel droplets in a falling chamber, Proc. VI Symposium (International) on Combustion, p. 726 (Reinhold Publ. Corp. 1957).

[2] Taylor, G. I., Fire under influence of natural convection, National Academy of Sciences, Symposium (International) on the Use of Models in Fire Research. Publication 786 (1961).

[3] Andracchio, C. R. and Axdelotl, J. C., Comparison of Flame Spreading Over Thin Flat Surfaces in Normal Gravity and Weightlessness in an Oxygen Environment, NASA TM X-1992 (May 1970).

[4] Abduragimov, I. M., Effect of weightlessness on diffusion flame of butyl alcohol, Fiz. Goreniya Vryva 5, 184 (June 1969).

[5] Hagard, J. B. and Cochran, T. H., Hydrogen and Hydrocarbon Diffusion Flames in a Weightless Environment, NASA TN D-7165 (February 1973).

[6] Berlad, A. L., Huggett, C., Kaufman, F., Markstein, G. H., Palmer, H. B. and Yang, C. H., Study of Combustion Experiments in Space, NASA CR-134744 (1974).

[7] Berlad, A. L., Gravitational Effects on Combustion, invited paper, COSPAR Meeting, Philadelphia, Pennsylvania (1976).

1. Report No.	2. Government Accession No.	3. Recipient's Catalog No.
NASA CR-3197		

4. Title and Subtitle	5. Report Date
COMBUSTION OF POROUS SOLIDS AT REDUCED GRAVITATIONAL CONDITIONS	October 1979
	6. Performing Organization Code
7. Author(s)	8. Performing Organization Report No.
A. L. Berlad and J. Killory	None
	10. Work Unit No.
9. Performing Organization Name and Address	
State University of New York at Stony Brook Long Island, New York 11794	11. Contract or Grant No. NSG-3051
	13. Type of Report and Period Covered
12. Sponsoring Agency Name and Address	Contractor Report
National Aeronautics and Space Administration Washington, D.C. 20546	14. Sponsoring Agency Code

15. Supplementary Notes

Final report. Project Manager, Thomas H. Cochran, Space Propulsion and Power Division, Lewis Research Center, Cleveland, Ohio 44135.

16. Abstract

A ground-based experimental and analytic study has considered the utility and the feasibility of a Space Shuttle-based experimental study of the combustion of porous solids at reduced gravitational conditions. This ground-based study has employed the Lewis Research Center's $g = 0$ (drop tower) facility. Experimental $g = 1$ studies were performed both at the Lewis Research Center and at State University of New York at Stony Brook. It is found that the considered Space Shuttle-based experimental program is expected to yield vital fundamental combustion information that is not obtainable from earth-bound studies alone. The considered Space Shuttle-based study is found to be entirely feasible and a detailed approach to these experiments is presented.

17. Key Words (Suggested by Author(s))	18. Distribution Statement
Combustion Zero gravity Spacelab	Unclassified - unlimited STAR Category 25

19. Security Classif. (of this report)	20. Security Classif. (of this page)	21. No. of Pages	22. Price*
Unclassified	Unclassified	108	A06

* For sale by the National Technical Information Service, Springfield, Virginia 22161

NASA-Langley, 1979