General Disclaimer

One or more of the Following Statements may affect this Document

- This document has been reproduced from the best copy furnished by the organizational source. It is being released in the interest of making available as much information as possible.

- This document may contain data, which exceeds the sheet parameters. It was furnished in this condition by the organizational source and is the best copy available.

- This document may contain tone-on-tone or color graphs, charts and/or pictures, which have been reproduced in black and white.

- This document is paginated as submitted by the original source.

- Portions of this document are not fully legible due to the historical nature of some of the material. However, it is the best reproduction available from the original submission.

Produced by the NASA Center for Aerospace Information (CASI)

DOE/NASA/0012-79/2
NASA CR 159577
EPRI PROJECT RP1082-1
GE79ET0101

CONCEPTUAL DESIGN OF THERMAL ENERGY STORAGE SYSTEMS FOR NEAR TERM ELECTRIC UTILITY APPLICATIONS

FINAL REPORT

E.W. Hall, W. Hausz, R. Anand, N. LaMarche,
J. Oplinger and M. Katzer
General Electric Company

July 1979

(NASA-CR-159577) CONCEPTUAL DESIGN OF THERMAL ENERGY STORAGE SYSTEMS FOR NEAR TERM ELECTRIC UTILITY APPLICATIONS Final Report (General Electric Co.) 359 p HC A16/MF A01 CSCL 10B G3/44 N79-33560 Unclas 35887

Prepared for

National Aeronautics and Space Administration

Lewis Research Center

Under Contract DEN3-12

for

U.S. DEPARTMENT OF ENERGY
Office of Energy Technology
Division of Energy Storage Systems

and

ELECTRIC POWER RESEARCH INSTITUTE

Under Contract RP1082-1

OCT 1979
RECEIVED
NASA STI FACILITY
ACCESS DEPT.

DOE/NASA/0012-79/2
NASA CR 159577
EPRI PROJECT RP1082-1
GE79ET0101

CONCEPTUAL DESIGN OF THERMAL ENERGY STORAGE SYSTEMS FOR NEAR TERM ELECTRIC UTILITY APPLICATIONS

FINAL REPORT

E.W. Hall, W. Hausz, R. Anand, N. LaMarche,
J. Oplinger and M. Katzer
General Electric Company

July 1979

Prepared for
National Aeronautics and Space Administration
Lewis Research Center
Under Contract DEN3-12

for

U.S. DEPARTMENT OF ENERGY
Office of Energy Technology
Division of Energy Storage Systems

and

ELECTRIC POWER RESEARCH INSTITUTE
Under Contract RP1082-1

FOREWORD

The work reported herein was performed by technical staff personnel of the General Electric Company and funded by DOE/STOR with support by the Electric Power Research Institute, Inc. (EPRI) under joint management of the NASA-Lewis Research Center (LeRC) and EPRI. The General Electric project manager was Eldon W. Hall, Energy Technology Operation, ESTD, who was supported by four highly qualified task leaders, each experts in the area for which they were responsible. The task leaders were: Walter Hausz, TEMPO; Dr. Raj K. Anand, Energy Systems Programs Department, ESTD; and Normand R. LaMarche and Martin M. Katzer, Project Engineering Operation, I&SE. Support to all tasks with analyses of utility systems was provided by James L. Oplinger, Electric Utility Systems Engineering Department, ESTD.

Major support was donated to the project by GE's Large Steam Turbine-Generator Division - primarily by George M. Yasenchak.

All of these mentioned by name were assisted by many others too numerous to mention both within and outside General Electric who provided excellent advice and information.

A critical assessment of the project was provided near the completion of Task I and again near the end of the program by a team of senion management and technical personnel from within General Electric and of representatives from electric utilities and architect-engineering firms.

This report covers all the work performed including that provided in a more detailed Topical Report covering Task I work prepared by General Electric-TEMPO and published by NASA in CR 159411 in October 1978 and by EPRI in their report EM-1037.

TABLE OF CONTENTS

Section		Page
1	SUMMARY	1-1
2	INTRODUCTION	2-1
	Background	2-1
	Objective	2-3
	Scope	2-4
	Methodology	2-5
	Task I. System Selection	2-5
	Task II. Conceptual System Design	2-5
	Task III. Benefit Analysis	2-5
	Task IV. Program Recommendations	2-7
	Task V. Reporting	2-7
	Contents of Final Report	2-7
3	SYSTEM SELECTION	3-1
	Objective	3-1
	Scope of Work	3-1
	Methodology	3-1
	Concepts Considered	3-3
	Information Sources	3-3
	Classification	3-3
	Sources	3-4
	Storage Media	3-6
	Transfer Media	3-9
	Containment	3-9
	Conversion to Electricity	3-12
	Proponents and Concepts	3-22

PRECEDING PAGE BLANK NOT FILMED

Section		Page
3	Preliminary Screening	3-25
	Criteria	3-25
	The Screening Process	3-30
	Selected Concepts	3-31
	Reference Plants	3-45
	Selection	3-45
	Modified Plant Designs for TES	3-47
	Modeling	3-51
	Performance Assumptions	3-51
	Economic Assumptions	3-64
	Evaluation of Systems	3-77
	High Temperature Water Systems	3-77
	Low Vapor Pressure Systems	3-87
	Discharge Time	3-93
	Selections	3-96
	Costs	3-97
	Near-Term Availability	3-97
	Utility Operating Requirements	3-101
	Diversity	3-104
	Environmental Acceptability	3-106
	Conservation Potential	3-106
	Cost of Electricity	3-107
	Selected Options	3-108
	References for Section 3	3-110
4	CONCEPTUAL SYSTEM DESIGN	4-1
	Objective	4-1
	Scope of Work	4-1
	Base Power Plants Design Definition	4-1
	HSC Plant with Reheat	4-2
	HSC Plant with Nonreheat	4-2
	NUREG Nuclear LWR Plant	4-7
	Nuclear LWR Base Plant	4-7
	Cycling Coal Fired Plants	4-10

Section		Page
4	TES Power Plant Conceptual Designs	4-14
	Plant #1-HSC Plant with Aboveground Oil/Rock Thermal Storage	4-14
	Plant #2-HSC Plant with Underground Pressurized Water Storage	4-41
	Plant #3-Nuclear LWR Plant with Aboveground Hot Feedwater Storage	4-66
	Plant #4-Nuclear LWR Plant with Aboveground Oil/Rock Storage for Feedwater Heating	4-91
	Power Plants Economic Analysis	4-118
	Plant Capital Cost Estimates	4-118
	TOTAL Investment Cost of the Plants	4-122
	TOTAL Investment Cost of Thermal Energy Storage Systems	4-131
	Levelized Annual Cost and Levelized Busbar Cost	4-139
	References for Section 4	4-151
5	UTILITY BENEFIT ANALYSIS	5-1
	Objectives	5-1
	Scope of Work	5-1
	Role of Energy Storage in Utility Systems	5-1
	Operation of General Storage	5-3
	Operation of Dedicated Storage	5-6
	Other Considerations	5-8
	Methodology	5-10
	Economic Evaluation	5-10
	Background	5-10
	Busbar Costs	5-11
	Single Year Simulation Approach	5-12
	Value Analysis Procedure	5-13
	TES PLANT Value Calculation	5-19
	TES SYSTEM Value Calculation	5-21
	Reliability Analysis to Determine TES Plant Effective Capability	5-23

Section		Page
5	Illustrative Cost/Value Calculations	5-28
	Cost/Value Comparison Results - TES System #2	5-36
	TES Impact on Fuel Consumption	5-42
	Summary of Utility System Econonomic Evaluation	5-44
	Non-Economic Comparisons	5-44
	Relative to Other TES Systems	5-46
	Relative to Cycling Coal Fired Plants	5-49
	Conclusions of Utility Benefit Analysis	5-50
	References for Section 5	5-52
6	PROGRAM RECOMMENDATIONS	6-1
	Scope	6-1
	Quantitative Analysis Input	6-1
	Qualitative Analysis Input	6-3
	Development and Demonstration Programs	6-6
	Program Recommendations	6-8

LIST OF ILLUSTRATIONS

Figure	Title	Page
2-1	Types of Storage	2-2
2-2	Work Flow Diagram of Thermal Energy Storage Project	2-6
3-1	Work Flow Diagram of Task I	3-2
3-2	Classification of Thermal Energy Storage Components	3-3
3-3	Source of Heat for Storage	3-5
3-4	Simplified Cycle with FWS	3-14
3-5	Simplified Cycle Configuration Utilizing Thermal Energy Storage	3-14
3-6	Variable Pressure Accumulator	3-16
3-7	Expansion Accumulator with Flash Evaporator	3-16
3-8	Displacement Accumulator with Flash Evaporators	3-18
3-9	Heat Exchangers for a Sensible Heat Storage System	3-19
3-10	Representative Temperature Profiles with Sensible Heat Storage	3-21
3-11	Feedwater Heating TES System for Plant #2	3-63
3-12	Comparison of the Direct Costs of Pressure Vessels for HTW Containment	3-71
3-13	Specific Cost of Peaking Turbine Island for Plant #1 as a Function of Throttle Pressure	3-75
3-14	Effect of Approach T, α, and Mass Flow Ratio M_c, (oil to steam) on Turnaround Efficiency and TOTAL Investment Cost	3-88
3-15	Net Station Heat Rate Versus Load	3-94
3-16	Effect of Discharge/Charge Time Ratio on Turnaround Efficiency	3-95
3-17	Comparison of Capital Cost of Selections from Different Discharge Cycles	3-103

Figure	Title	Page
4-1	Cycle Schematic of HSC Plant with Reheat (NUREG Plant)	4-3
4-2	HSC Nonreheat Base Plant	4-6
4-3	Cycle Schematic of NUREG Nuclear LWR Plant	4-8
4-4	Nuclear LWR Base Plant	4-9
4-5	Cycle Schematic of Cycling Coal Fired Plant - 12.41 MPa/510°C/510°C (1800 psig/950°F/950°F)	4-11
4-6	Cycle Schematic of Cycling Coal Fired Plant - 16.55 MPa/538°C/538°C (2400 psig/1000°F/1000°F)	4-12
4-7	Artist Rendering of TES Plant #1	4-15
4-8	TES Plant #1, Heat and Mass Balance Numbers for Base Cycle	4-19
4-9	TES Plant #1, Heat and Mass Balance Numbers for Charging Cycle	4-21
4-10	TES Plant #1, Heat and Mass Balance Numbers for Discharging Cycle	4-23
4-11	TES Plant #1, Thermal Storage System Flow Diagram - Charging Operation	4-25
4-12	TES Plant #1, Thermal Storage System Flow Diagram - Discharging Operation	4-27
4-13	TES Plant #1, Main Steam Flow Diagram	4-29
4-14	TES Plant #1, One Line Electric Diagram	4-31
4-15	TES Plant #1, Plot Plan	4-33
4-16	TES Plant #1, Equipment Arrangement	4-35
4-17	Nonreheat HSC 800 MW Base Plant, One Line Electrical Diagram	4-37
4-18	Oil/Rock Thermal Storage for Plant #1	4-39
4-19	Artist Rendering of TES Plant #2	4-43
4-20	TES Plant #2, Heat and Mass Balance Numbers for Base Cycle	4-47
4-21	TES Plant #2, Heat and Mass Balance Numbers for Charging Cycle	4-49
4-22	TES Plant #2, Heat and Mass Balance Numbers for Discharging Cycle	4-51
4-23	TES Plant #2, Thermal Storage System Flow Diagram - Charging Operation	4-53
4-24	TES Plant #2, Thermal Storage System Flow Diagram - Discharging Operation	4-55

Figure	Title	Page
4-25	TES Plant #2, Main Steam Flow Diagram	4-57
4-26	TES Plant #2, One Line Electrical Diagram	4-59
4-27	TES Plant #2, Plot Plan	4-61
4-28	TES Plant #2, Equipment Arrangement	4-63
4-29	Underground Cavern Thermal Storage Schematic for Plant #2	4-46
4-30	Artist Rendering of TES Plant #3	4-67
4-31	TES Plant #3, Heat and Mass Balance Numbers for Base Cycle	4-71
4-32	TES Plant #3, Heat and Mass Balance Numbers for Charging Cycle	4-73
4-33	TES Plant #3, Heat and Mass Balance Numbers for Discharging Cycle	4-75
4-34	TES Plant #3, Thermal Storage System Flow Diagram - Charging Operation	4-77
4-35	TES Plant #3, Thermal Storage System Flow Diagram - Discharging Operation	4-79
4-36	TES Plant #3, Main Steam Flow Diagram	4-81
4-37	TES Plant #3, One Line Electrical Diagram	4-83
4-38	TES Plant #3, Plot Plan	4-85
4-39	TES Plant #3, Equipment Arrangement	4-87
4-40	Aboveground Feedwater Storage in PCIV, Thermal Storage Schematic for LWR Plant #3	4-89
4-41	Nuclear LWR Base Plant One Line Electrical Diagram	4-93
4-42	Artist Rendering of TES Plant #4	4-95
4-43	TES Plant #4, Heat and Mass Balance Numbers for Base Cycle	4-97
4-44	TES Plant #4, Heat and Mass Balance Numbers for Charging Cycle	4-99
4-45	TES Plant #4, Heat and Mass Balance Numbers for Discharging Cycle	4-101
4-46	TES Plant #4, Thermal Storage System Flow Diagram - Charging Operation	4-103
4-47	TES Plant #4, Thermal Storage System Flow Diagram - Discharging Operation	4-105
4-48	TES Plant #4, Main Steam Flow Diagram	4-107
4-49	TES Plant #4, One Line Electrical Diagram	4-109

Figure	Title	Page
4-50	TES Plant #4, Plot Plan	4-111
4-51	TES Plant #4, Equipment Arrangement	4-113
4-52	Oil/Rock Thermal Storage for Feedwater Heating in Plant #4	4-115
4-53	Levelized Annual Cost Versus Annual Hours of Operation of Various Thermal Energy Storage Systems	4-144
4-54	Levelized Busbar Energy Cost Versus Annual Hours of Operation of Various Thermal Energy Storage Systems	4-145
4-55	Levelized Busbar Energy Cost Versus Annual Hours of Operation of TES Plant #2 for Various Design Hours	4-146
4-56	Levelized Annual Cost Versus Annual Hours of Operation of Cycling Coal Fired Plants	4-148
4-57	Levelized Busbar Energy Cost Versus Annual Hours of Operation of Cycling Coal Fired Plants	4-149
5-1	Energy Storage Systems	5-3
5-2	Operation of System Storage - Peak Day in August	5-5
5-3	Operation of System Storage - Peak Day in March	5-7
5-4	Operation of Dedicated Energy Storage	5-7
5-5	Output Power Profile for TES Plant #2	5-18
5-6	Generation Alternatives	5-18
5-7	Effective Capability Analysis Schematic Diagrams	5-25
5-8	Effective Capacity of Energy Storage	5-28
5-9	EPRI Utility System D Base Case and TES Substitution Case	5-29
5-10	TES Plant #2 - Impact on Equipment Costs	5-30
5-11	TES Plant #2 - Impact on Annual Revenue Requirements (EPRI Utility System D)	5-32
5-12	TES Plant #2 - Cost/Value Comparison (EPRI Utility D, 6% Penetration, 2 TES Plants @ 1148 MW)	5-33
5-13	TES Plant #2 - Cost/Value Comparison (EPRI Utility System D, 6% Penetration, 2 TES Plants @ 1148 MW)	5-34
5-14	TES System #2 - Cost/Value Comparison (EPRI Utility System D, TES Versus Gas Turbines, 6% Penetration	5-36
5-15	TES System #2 - Cost/Value Comparisons (6% Penetration)	5-37
5-16	TES System #2 - Cost/Value Comparison with Increased Capacity (EPRI Utility System D, TES Versus Gas Turbines, 6% Penetration)	5-38

Figure	Title	Page
5-17	Impact of Penetration on TES System #2 Value	5-40
5-18	Impact of Gas Turbines Fuel Cost on TES Plant #2 Value	5-41
5-19	1990 Fuel Consumption (EPRI Synthetic Utility System D)	5-42
5-20	1990 Fuel Consumption (EPRI Synthetic Utility System D)	5-43

LIST OF TABLES

Table	Title	Page
3-1	Materials for Thermal Energy Storage	3-6
3-2	Hot Water Containment Vessels	3-10
3-3	Proponents of Concepts	3-24
3-4	Summary of Twelve Selected Concepts	3-32
3-5	Reference Plant Parameters	3-47
3-6	Cost Accounts of Reference Plants	3-65
3-7	Illustrative Cost Breakdown of Cost Accounts	3-66
3-8	Summary of TES System Costs with Large High Sulfur Coal Plant (High Temperature Water Systems Using PCIV)	3-81
3-9	Summary of TES System Costs with Nuclear (LWR) Plant (High Temperature Water Systems Using PCIV)	3-85
3-10	Summary of TES System Costs with Alternate Types of Containment (High Temperature Water Systems)	3-86
3-11	Summary of TES System Costs with Large High Sulfur Coal Plant (Low Vapor Pressure Systems)	3-89
3-12	Summary of TES System Costs with Nuclear (LWR) Plant (Low Vapor Pressure Systems with Feedwater Heating)	3-93
3-13	Economic and Near-Term Availability Ranking	3-96
4-1	Performance Comparison (Reheat Plant Versus Nonreheat Plant)	4-5
4-2	Performance Comparison (NUREG Nuclear Plant Versus Nuclear Base Plant)	4-7
4-3	Performance Comparison (Cycling Coal Fired Plants)	4-13
4-4	Performance of Plant #1 - HSC Plant with Oil/Rock Thermal Storage	4-16
4-5	Approximate Auxiliary Losses Breakdown of Plant #1 - HSC Plant with Oil/Rock	4-17
4-6	TES Component Descriptions for Plant #1 - HSC Plant with Oil/Rock Storage	4-42

Table	Title	Page
4-7	Performance of Plant #2 - HSC Plant with Underground Pressurized Water Storage	4-44
4-8	Approximate Auxiliary Losses Breakdown of Plant #2 - HSC Plant with Underground Pressurized Water Storage	4-45
4-9	TES Component Descriptions for Plant #2 - HSC Plant with Underground Pressurized Water Storage	4-65
4-10	Performance of Plant #3 - Nuclear LWR Plant with Aboveground Hot Feedwater Storage	4-68
4-11	Approximate Auxiliary Losses Breakdown of Plant #3 - LWR Plant Aboveground Feedwater Storage	4-69
4-12	TES Component Descriptions for Plant #3 LWR Plant with Aboveground Feedwater Storage	4-91
4-13	Performance of Plant #4 - Nuclear LWR Plant with Aboveground Oil/Rock Storage for Feedwater Heating	4-96
4-14	Approximate Auxiliary Losses Breakdown of Plant #4 - with Aboveground Oil/Rock Storage for Feedwater Heating	4-96
4-15	TES Component Descriptions for Plant #4 with Aboveground Oil/Rock Storage for Feedwater Heating	4-117
4-16	Base Costs - NUREG 0244, HSC Plant - 794,415 kW Net	4-123
4-17	Base Costs - NUREG Modified, HSC Plant - 741,000 kW Net	4-123
4-18	Base Costs - Nonreheat HSC Base Plant - 741,633 kW Net	4-124
4-19	Base Costs - NUREG 0241 Nuclear LWR Plant - 1,138,610 kW Net	4-124
4-20	Base Costs - Nuclear LWR Base Plant - 1,072,573 kW Net	4-125
4-21	Base Costs - TES HSC Plant #1A with Aboveground Oil/Rock Gravel, Trickle Charge Thermal Storage - 1,125,332 kW Net	4-125
4-22	Base Costs - TES HSC Plant #1B with Aboveground Oil/Rock Gravel, Dual Media Thermal Storage - 1,125,332 kW Net	4-126
4-23	Base Costs - TES HSC Plant #1C with Aboveground Oil/Taconite, Dual Media Thermal Storage - 1,125,332 kW Net	4-126
4-24	Base Costs - TES HSC Plant #2 Underground Cavern - 1,147,996 kW Net	4-127
4-25	Base Costs - TES Nuclear LWR Plant #3 with Aboveground Feedwater Storage in PCIV - 1,220,758 kW Net	4-127
4-26	Base Costs - TES Nuclear LWR Plant #4A with Aboveground Oil/Rock Gravel, Trickle Charge Thermal Storage for Feedwater Heating - 1,222,869 kW Net	4-128
4-27	Base Costs - TES Nuclear LWR Plant #4B with Aboveground Oil/Rock Gravel, Dual Media Thermal Storage for Feedwater Heating - 1,222,869 kW Net	4-128

Table	Title	Page
4-28	Base Costs - TES Nuclear LWR Plant #4C with Aboveground Oil/Taconite, Dual Media Thermal Storage for Feedwater Heating - 1,222,869 kW Net	4-129
4-29	Base Costs - Cycling Coal Fired Plant, 12.41 MPa/510°C/510°C (1800 psig/950°F/950°F), 511,500 kW Net	4-129
4-30	Base Costs - Cycling Coal Fired Plant, 16.55 MPa/538°C/538°C (2400 psig/1000°F/1000°F), 511,500 kW Net	4-130
4-31	TOTAL Investment Costs (1976$)	4-132
4-32	Cost Comparison of HSC Base Plant with HSC Thermal Storage Plants	4-133
4-33	Direct Cost Comparison of Major Items of TES Plant #1A with HSC Base Plant	4-134
4-34	Direct Cost Comparison of Major Items of TES Plant #3 with HSC Base Plant	4-135
4-35	Cost Comparison of Nuclear LWR Base Plant with Nuclear Thermal Storage Plants	4-136
4-36	Direct Cost Comparison of Major Items of TES Plant #3 with Nuclear LWR Base Plant	4-137
4-37	Direct Cost Comparison of Major Items of TES Plant #4A with Nuclear LWR Base Plant	4-138
4-38	Total Investment Cost of Thermal Energy Storage Systems (C_T)	4-141
4-39	Levelized Annual Cost ($\overline{A}_C$) and Levelized Busbar Cost ($\overline{BBEC}$) of Thermal Energy Storage Systems	4-143
4-40	Levelized Annual Cost and Levelized Busbar Cost of Cycling Coal Fired Plants	4-147
5-1	1990 Generation Mix for Three Utilities	5-14
5-2	1990 Fuel Costs per EPRI TAG Document	5-16
5-3	Plant Cost Comparisons	5-22
5-4	Effective Capability for TES Plants & Alternatives	5-26
5-5	Evaluations of TES Systems (Relative to each other)	5-45
5-6	Evaluation of TES Systems (Relative to Cycling Coal Plants)	5-45
6-1	Cost of Electricity Summary (mills/kWh)	6-1
6-2	TES Storage Costs	6-4
6-3	Potential for Reducing TES Capital Costs	6-5

Section 1

SUMMARY

This project makes a detailed evaluation of thermal energy storage (TES) for meeting peak power requirements of electric utilities. TES is made a part of the steam electric generating plant, storing thermal energy from steam or hot feedwater during low demand periods and using the thermal energy to generate electricity during peak demand periods.

While the steam turbine must still be sized to deliver the utility peak power, the steam generator can be designed at less than peak power (near average power) by using TES to supply energy to match the turbine requirements. Steam generator costs can therefore be less in a steam plant with TES than in one without TES where it must deliver peak power. These reduced costs are offset by the cost of the TES system and somewhat higher fuel use because of reduced efficiency. Less expensive baseload fuels, however, can be used to produce peak power.

Over forty TES concepts gleaned from the literature and personal contacts were examined for possible application.

Initial criteria for selection emphasized near-term availability and potential for economic feasibility. Many storage media, forms of containment, and cycle configurations for conversion to electricity were included in the concepts examined. Media included hot oil, molten salt or sulfur, rock or other solid media, and high temperature water. As the latter requires pressure vessels for containment at high temperature, such containment concepts as steel pressure vessels, prestressed cast iron vessels (PCIV), prestressed concrete pressure vessels (PCPV), and several concepts of containment in lined underground cavities were examined.

The initial screening reduced the set to twelve selections, some of which combined the elements of several concepts. These selections were then applied to two reference plants, an 800 MW plant burning high-sulfur coal, and an 1140 MW plant utilizing a light water nuclear reactor. Results of analysis of performance and costs of the twelve TES plants led to approval of four options by DOE/NASA and EPRI for more detailed consideration and conceptual design.

Two of the options use high sulfur coal-fired plants (HSC) and peaking turbines to supply the peaking power from steam generated from the thermal energy stored during off-peak periods. Steam is withdrawn from the cycle after the high-pressure turbine during the off-peak period to obtain the required energy for storage. With peaking turbines, power swings of ± 50 percent of the normal power are possible. One of the coal concepts stores the thermal energy in a dual media of a bed of rock with pores filled with hot oil at low pressure as a heat transfer medium. The other option uses an underground cavity lined with steel to store hot water under high pressure. Concrete is used to transfer the stress from the liner to the supporting rock.

The other two options utilize conventional nuclear plants and obtain power variations by reducing the feedwater extraction during peak power periods and increasing the extraction during off-peak periods. The thermal energy of the hot feedwater during the off-peak periods is stored to heat feedwater during the peak periods. Because of limitations on feedwater extraction, power swings are limited to ± 10 to 15 percent of normal power. One of the concepts utilizes the PCIV for storage of hot feedwater and the other utilizes the dual media, hot oil and rock, to store the feedwater thermal energy.

To avoid difficult design problems in the coal-fired boiler when large quantities of steam are withdrawn at the HP turbine outlet, the coal plants for TES were designed without reheaters resulting in increases in both cost and heat rate.

Cycling coal plants were considered as a possible alternative to TES systems for peak load following. Performance and cost estimates were therefore made for two 512 MW plants, one at 1800 psig/950°F/950°F steam conditions and another at 2400/1000/1000.

Based on the conceptual designs, the cost and performance of the four TES systems as well as reference nuclear and coal plants were determined. The EPRI Technical Assessment Guide (TAG)* was used as a basis for the reference plants and fuel and operating costs. Costs of the other systems were made as consistent as possible with the TAG basis. A total installed cost in mid-1976 dollars and a levelized busbar energy cost was found for each plant assuming a 30-year life beginning operation in 1990.

The 1977 Consent Decree places a number of restrictions on the General Electric Company regarding the furnishing of performance and pricing information on large steam turbine-generators. Accordingly, performance data, performance differences data and pricing information on steam turbine-generators included in this report are estimated data, for the most part calculated in 1976, but which are accurate enough for the intended purpose of this study.

The limited peaking capacity that results with feedwater energy storage reduces the benefit that the nuclear systems which were studied can provide a utility. These systems also have a high cost increment for peaking in both capital and levelized busbar electricity costs.

The coal plants with separate peaking turbines provide peaking power about equal to cycling coal plants in both total investment cost and levelized electricity cost. Both the TES and cycling coal plants are significantly lower in cost than the TES nuclear plants but still cannot compete with gas turbines for peaking duty at 1500 hours of operation or less per year unless oil becomes unavailable or increases significantly in cost.

---

* Electric Power Research Institute (EPRI); "Technical Assessment Guide"; Technical Assessment Group, Palo Alto, California, August 1977

The significantly higher cost of the TES nuclear plants compared to the coal plants is attributed principally to the feedwater storage mode and the high cost of key TES components, not to the fact that these TES systems were integrated with a nuclear plant.

A major disadvantage of TES systems as compared to cycling coal plants or gas turbines is their limited capacity to operate at any time if required because of other system outages. Increasing TES system capacity, however, so that it can operate more hours per day increases the cost more than the benefits obtained.

The capital investment required for storage is generally equal to or greater than that for at least some types of complete generation equipment, especially peaking systems. Hence, if storage systems are to be viable, there must be an opportunity to displace some of the high fuel or production costs of peaking generation equipment with lower production costs of baseload or intermediate equipment. Any production cost savings which are possible will depend on the fuel costs and efficiencies of both the peaking and storage systems.

The values of the TES systems to utilities are sensitive to the cost difference between gas turbine fuel and coal. TES integrated with a coal plant could be competitive with gas turbines for peaking if the 1990 fuel cost differential between oil and coal becomes greater than 3.6 $/MBtu in 1976 dollars. The current EPRI estimate is a difference of 2.15 $/MBtu.

The TES systems meet the design objectives of being load following and daily cycling plants that are not dependent on scarce fuels. A 12% penetration of TES system plants into a typical generation mix (EPRI Utility System D) would reduce the system oil consumption by 32% (3.3 million barrels per year). However, a 12% penetration by cycling coal plants in the same utility system would reduce oil consumption by 52%.

None of the four TES systems, based on the near-term designs for this study, are economically attractive to utilities. Cost reductions of 10 to 40% are required for TES to be competitive with cycling coal plants and 40 to 50% if they are to be competitive with gas turbines at 1500 hours of annual operation. About one-half of the TES costs are related to the storage related items, with the remaining costs for standard state-of-the-art equipment such as turbines, piping, valving, etc. Reductions in total costs, therefore, must come almost entirely from reductions in the TES storage related costs.

Additional testing and development work on large TES systems would be required prior to a major commitment to TES by utilities. This large scale demonstration would be required to substantiate the performance figures for final system designs. The study design performance parameters were all extrapolated from smaller storage applications.

While not investigated in this study, redesigns of the base plants and TES systems would be required to improve the performance of TES for peaking applications. These changes would eliminate their use in near-term applications.

Additonal refinements of near-term TES plant designs to improve the economic competitiveness with alternate peaking systems, especially cycling coal plants, will probably yield only marginal improvements.

Section 2

INTRODUCTION

This report describes work done by the General Electric Company starting in December 1977 on joint projects sponsored by the Department of Energy/Division of Energy Storage Systems, *Conceptual Design of Thermal Energy Storage Systems for Near Term Electric Utility Applications* (NASA-Lewis Research Center contract DEN3-12), and by the Electric Power Research Institute, Inc. (EPRI contract RP1082-1).

BACKGROUND

There is a need in electric utility operation for an economic means of supplying the varying demand for electric power. While there are seasonal and weekly demand patterns, the daily load pattern is of primary concern in this project. To meet this varying demand the utility will generally have baseload, intermediate load, and peaking load equipment. The baseload equipment operates nearly continuously, burns inexpensive fuel, such as coal or nuclear, but has a high capital cost. Intermediate equipment will cycle daily to meet part but generally not all of the remaining demand and has lower cost equipment but higher capital costs. Peaking equipment fulfills the remaining demand with the least expensive equipment but with more expensive fuel.

Most utilities meet peaking demand with inexpensive gas turbines burning petroleum fuel. An alternative for meeting peak load demands is the use of energy storage. Energy storage has long been used in pumped-hydro form where off-peak power moves water from a lower to an upper reservoir, and electricity is generated during peak demand hours as the water returns to the lower reservoir through a hydraulic turbine.

The final report prepared by the Public Service Electric and Gas Company of New Jersey (EPRI EM264), identified and compared a number of energy storage concepts including above- and below-ground pumped hydro, compressed air storage, thermal energy storage, battery storage, and flywheel storage. Thermal energy storage was identified as a potentially viable contender because of its technical and economic features and potential for early commercialization.

Various types of storage and their location in a utility generation and distribution system is illustrated in Figure 2-1. Most common systems use fuel storage whether for baseload coal and nuclear plants that vary in output to meet demand or for peaking gas turbines that come on line only during peak demand periods. The fuel can be stored coal, nuclear fuel stored in the reactor, oil stored in tanks, or natural gas stored in pipelines. The disadvantage is that the entire generating and distribution system must be sized to meet the peak load. During off-peak the system is underutilized.

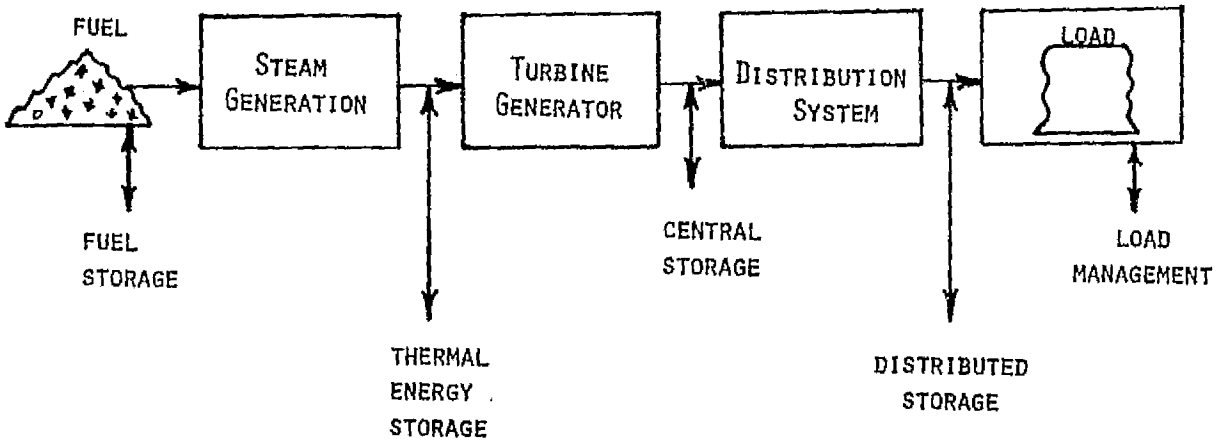

Figure 2-1. Types of Storage

At the opposite extreme the utility customer might, through proper load management, regulate his demand so as to require a nearly constant power and therefore uniform demand on the utility and distribution system.

Distributed storage assumes the storage of energy converted from electricity during periods of low demand and reconversion and reinsertion of electricity back into the utility owned electric lines near the customer during peak periods. Examples of storage systems suitable for distributed locations are batteries and flywheels. These systems may be acceptable in small sizes. Distributed systems have the advantage that all utility elements up to the distributed storage system can operate at near average power levels and only the distribution lines between the storage and the customer need to be sized for the peak load.

Central storage systems are similar in concept to distributed systems except that they are generally suitable only in large sizes and must, therefore, be near the generating plant and ahead of the distribution system. Examples of types of storage suitable only for central storage are pumped hydro and compressed air. Both of these systems require large underground facilities which may depend on the particular site and, as such, are not suitable for all locations.

Both distributed and central storage systems have been called general storage (see Section 5) because their energy source is electricity that may be from any generating system in general.

Thermal energy storage (TES), on the other hand, is tied closely to specific generation equipment. When used with steam generating equipment it utilizes the steam produced in the coal or nuclear steam generator prior to its use in steam turbines. The use of thermal energy following the steam generator permits operating the steam generator at nearly constant load but the turbine and generator must be sized for the peak load. This is in contrast to those storage systems which store energy converted from electricity and can operate the steam and turbine generators at a constant power level.

OBJECTIVE

The objective of this project is to make a detailed evaluation of TES through a careful screening, analysis, conceptual design, and evaluation to determine if it can meet the peak power needs of electric utilities for

near-term applications. A thorough review and search for all applicable systems will assure that no desirable or attractive system is overlooked. The analysis will assure that each system is considered in its most advantageous configuration or arrangement and permit selection of the most promising systems. The conceptual design will permit a more detailed determination of the performance, operation, and cost of each of the selected systems than in previous studies.

It is not the objective of this project to compare thermal energy storage with other storage systems, but to identify those systems that appear most promising for near-term utility applications.

SCOPE

Primary emphasis in this project is on near-term applications by electric utilities confined to new plants, planned and designed to incorporate the TES. The new plants considered are conventional coal and nuclear fueled, which represent the large majority of expected electric utility capacity additions between now and AD 2000. As nuclear plants, only light water reactors (LWR) are considered; as coal-fired plants, only conventional types with flue gas desulfurization (FGD) when high-sulfur coal is to be burned are considered. All plants employ a steam driven turbogenerator for conversion to electricity and a fired boiler or nuclear reactor as a steam supply.

The requirement for near-term availability requires interpretation since the planning and construction cycle for large conventional plants is eight to twelve years. Concepts to be considered must be capable of demonstration before 1985 so that manufacturers can offer to supply, and utilities can plan and order with confidence over all or most of the period 1985 - 2000. By this criterion penetration of the market will be small until the latter part of the period.

During latter phases of the study while considering benefits to the electric utilities, strong competitors of TES that must be considered as alternative generating units in the utility system are gas turbines and cycling coal plants. These plants can be designed to fulfill the same peaking demand on a daily basis as the TES plants. Assumptions on both

performance and costs for the gas turbines and cycling coal plants were made as consistent as reasonably possible with those of the TES plants. Two cycling coal plants were considered. One was designed to have lower cost but higher heat rate than the other by using a lower steam pressure and fewer feedwater heaters.

METHODOLOGY

The work on this project was carried out in the following four technical tasks and a reporting task according to the outline of work shown in Figure 2-2.

Task I. System Selection

Task I is in two parts. The first part consists of the identification and definition of all applicable candidate TES systems, the classification and evaluation of these candidates, and a preliminary screening to no more than twelve concepts. After approval of the twelve concepts, the second part consists of making preliminary conceptual designs of each concept when applied to a selected reference plant, and after further evaluation, recommending four options for more detailed conceptual design. The results of this task were documented in a Topical Report (NASA CR-159411 and EPRI EM-1037).

Task II. Conceptual System Design

Upon approval of the Task I options, Task II consists of a more detailed definition of plant characteristics and conceptual design and a more accurate evaluation of the performance and cost of each of the selected options. Using a reference plant as a basis, the performance and cost of the TES peaking system is to be defined. Performance and cost of the cycling coal plants which are alternates for generating peaking power are to be determined on a consistent basis with the TES plants.

Task III. Benefit Analysis

Based on the conceptual designs of the TES systems, Task III consists of an evaluation of the technical, economic and operational characteristics and the value to the utility of various systems for generating peaking power.

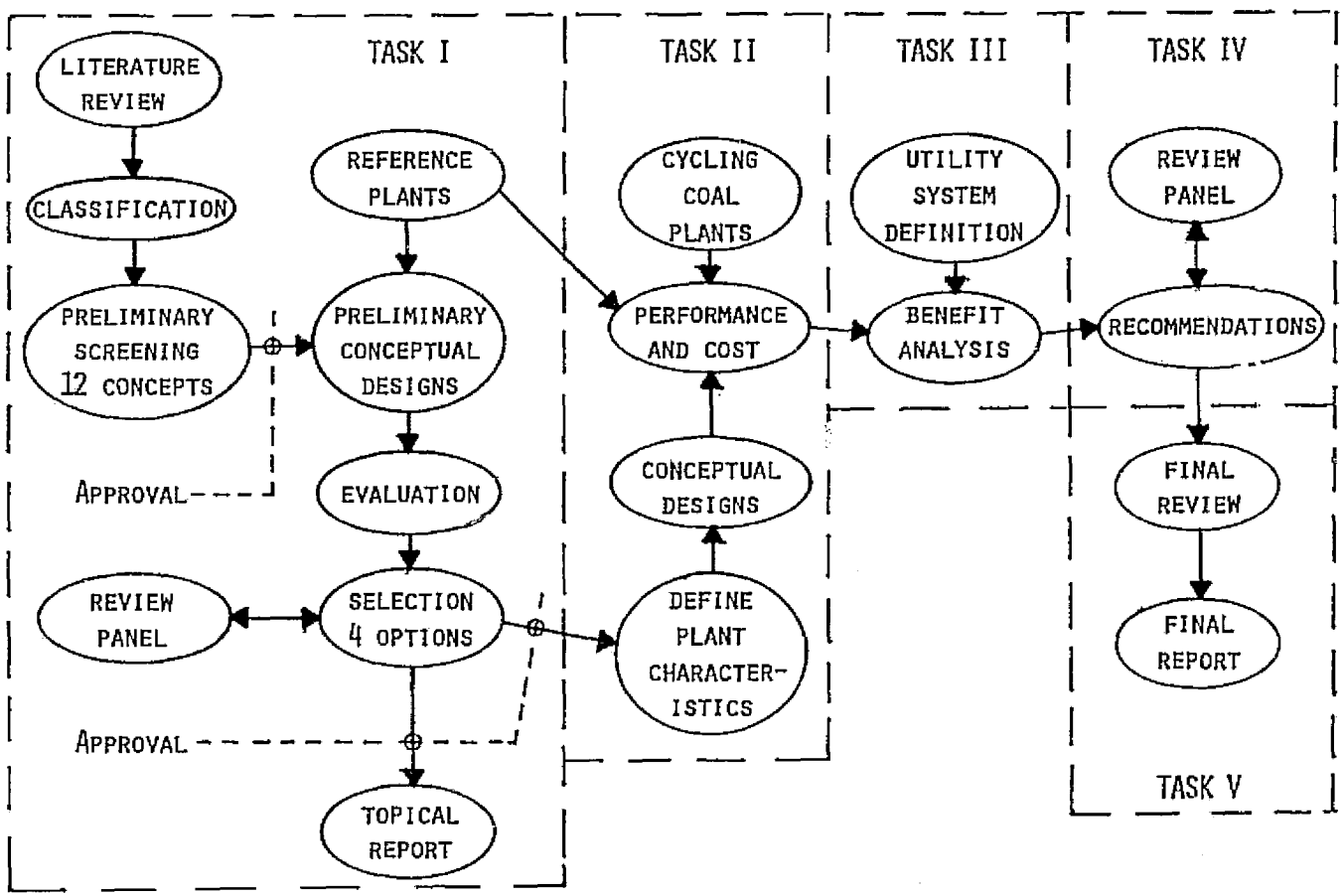

Figure 2-2. Work Flow Diagram of Thermal Energy Storage Project

The utility benefits include an evaluation of potential fuel savings; reliability, siting and environmental characteristics; and the market potential.

Task IV. Program Recommendations

Task IV utilizes the results of the previous tasks to make recommendations on future TES programs to satisfy the goal of near-term commercialization.

Task V. Reporting

The purpose of the last task is to report the results in a final review and document the results in a final report - the subject of this document.

CONTENTS OF FINAL REPORT

The sections of this report follow the above tasks in accomplishing the work outlined above. Where needed, references for each section are located at the end of that section.

Section 3

SYSTEM SELECTION

OBJECTIVE

The objective of Task I is to identify all proposed concepts, screen them through a systematic evaluation - first to a set of twelve, then to a set of four, for a more detailed conceptual design and evaluation.

SCOPE OF WORK

Because this study is directed to near-term utility applications, only those concepts that could be used with utility steam plants - both coal and nuclear - are considered. Some concepts are suitable for alternate applications, such as solar, but if they could be applied to utility steam plants they were included.

METHODOLOGY

The sub-tasks used in the Task I screening and their relationships are shown in Figure 3-1.

Initially two sub-tasks were performed in parallel - System Taxonomy or classification of concepts and Review of Literature involving a comprehensive survey of library sources, related contracts, known reports, personal contacts, and solicited sources.

From the data gathered, a comprehensive listing and description of relevant concepts was derived and a preliminary screening performed on the basis of near-term availability, comparative economic viability, and suitability for utility operation. Following the preliminary screening, approval was obtained from NASA and EPRI for the initial set of twelve concepts before proceeding to a more detailed evaluation.

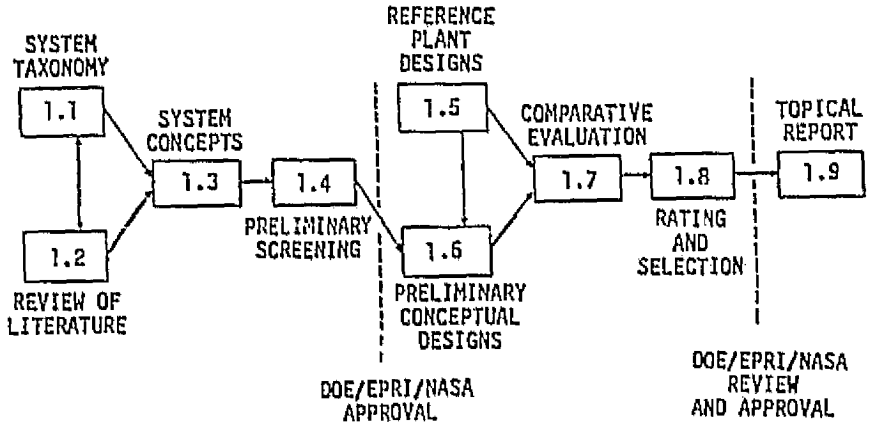

Figure 3-1. Work Flow Diagram of Task I

In the second half of Task I, reference plants were selected and the problems of integrating the selected concepts with a conventional plant were addressed. The thermodynamic performance of the reference plants modified for TES inclusion, and for the TES systems, was computer modeled for comparative evaluation. Costs of storage materials, containment, other TES components, and of the power conversion components of the reference plants were derived for economic comparisons. Consultation with electric utilities and manufacturers of conventional plant components, TES containment, and storage media provided information on other criteria for evaluation.

Following the comparative evaluation and rating, four concepts were approved - two applied to a high sulfur coal plant and two applied to a nuclear LWR plant.

The last sub-task, preparation of a Topical Report, resulted in Reference 3-1, prepared by General Electric Company-TEMPO.

CONCEPTS CONSIDERED

Information Sources

The initial source of literature references was recent project reports of ERDA, DOE, NASA, and EPRI that were relevant to thermal energy storage. Each of these, in its reference lists, provided additional sources that were obtained. Consultation with government agency program managers, industry project managers, and consultants provided additional sources.

A computer search was made, with relevant key-word combinations. The following data bases were searched from years as early as 1964 up to 1977: Science Abstracts, Energyline, Compendex (Engineering Index), NTIS, Nuclear Science Abstracts, ERDA Energy Data Base. The printout of abstracts from the selected key-word combinations were scanned, and about thirty-five references not previously identified were ordered.

The bibliography or literature references list continued to grow during the course of the project as information on particular materials, technologies, methodology, or concepts became of interest. This search resulted in the 237 entries listed and cross referenced in Reference 3-1, Volume 2, Appendix A.

CLASSIFICATION

The basic structure defining the classification of the systems is given in Figure 3-2.

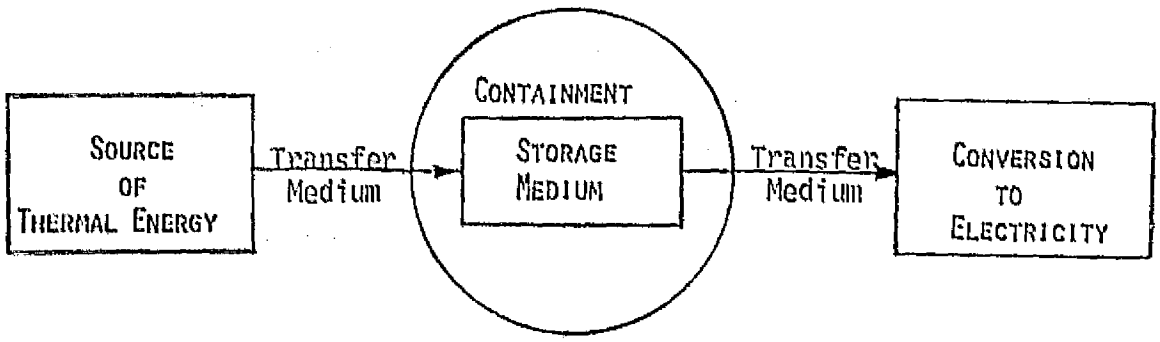

Figure 3-2. Classification of Thermal Energy Storage Components

All of the thermal energy storage systems identified have one or more storage media, a form of containment for the storage media, a fluid for heat transfer and heat transport, a source of heat derived from the power plant, and a means for conversion of the stored thermal energy into electricity.

For utility applications, the only thermal energy sources relevant to this project are steam and hot water. Some concepts identified from the literature used as sources hot gases: helium from gas-cooled reactors, or solar thermal towers; hot sulfur trioxide from solar towers; or hot air from compressed air storage systems. Other components of some of these systems: containment, storage media, and reconversion to electricity, were considered and included if applicable but non-steam-cycle thermal sources were discarded.

Hot water can, of course, be stored directly and used either as hot water or as a source of steam. Steam as such is seldom stored because of its low density. When the energy of steam is to be stored and steam is required as output, it is first condensed to hot water by mixing with water, stored, and then flashed to steam for reuse. At 1000 psia and 545°F, saturated water has nearly 10 times the enthalpy per unit volume as saturated steam although some of this advantage is lost during flashing. About 5 times as much saturated steam can be drawn from a tank of hot water as from a tank of steam of equal-volume between the pressures of 1000 and 250 psia.

Sources

In a steam power plant there are many temperature sources of thermal energy. Figure 3-3 shows a simplified diagram of a typical fossil steam plant. A nuclear plant would have similar but fewer sources since it operates at lower peak temperatures and pressures. The sources shown in Figure 3-3 are: (1) live superheated steam from the heat source or high pressure turbine inlet, (2) high pressure turbine outlet or cold reheat steam, (3) hot reheat steam, (4) crossover steam or steam from the intermediate pressure turbine outlet, (5) hot feedwater, and (6) saturated water from the boiler drum.

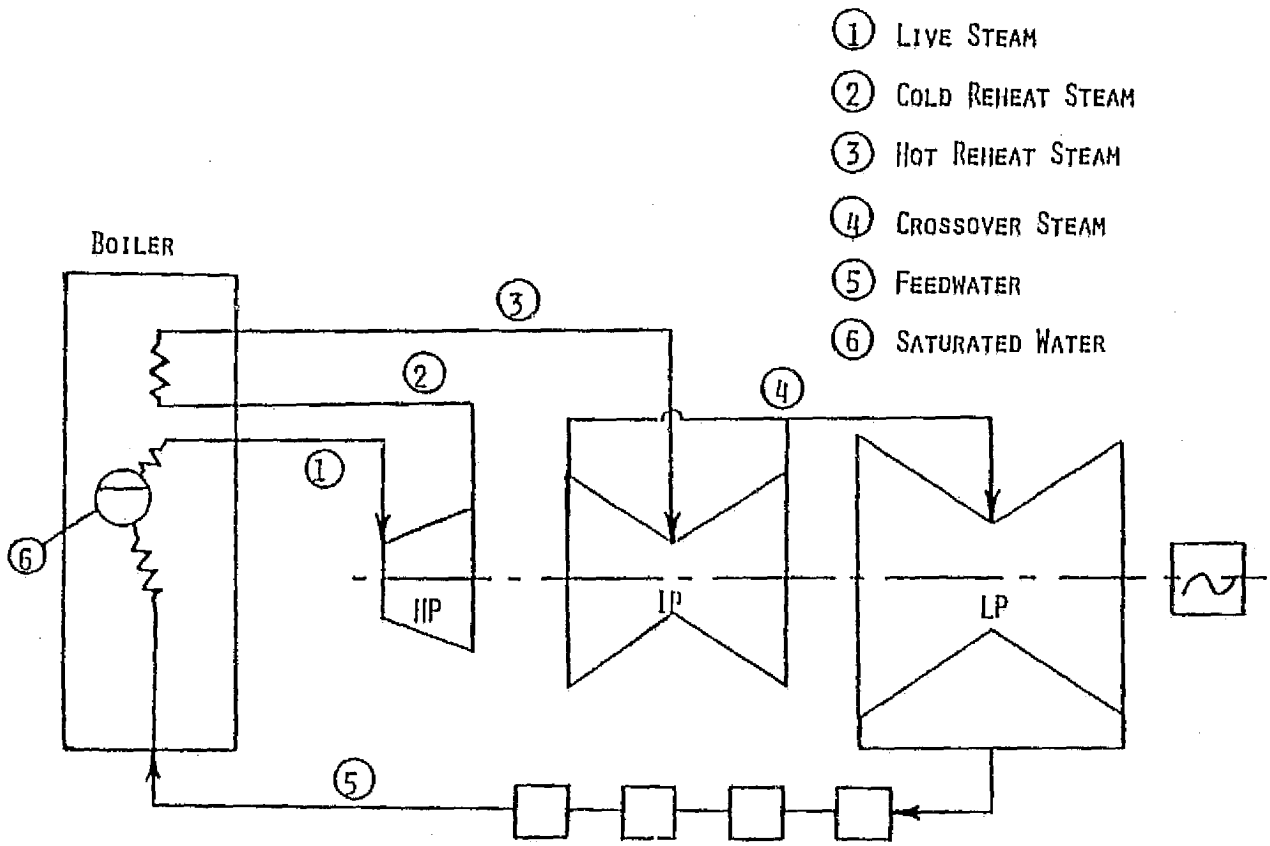

Figure 3-3. Source of Heat for Storage

If either live steam from (1), cold reheat steam from (2), or saturated water from (6) is used, the flow through the superheater section of a normally designed boiler would be reduced from the normal flow during the period of time that the storage system is being charged. While a boiler could be designed for this type of operation, the control would be much more difficult and the reliability and life could be seriously impaired and maintenance increased. Furthermore, the use of live steam from (1) or hot reheat steam from (3) for storage, results in the loss of potential for doing work.

Live steam, the high pressure output from a coal-fired boiler (1), may have a pressure from 16 to 24 MPa (2400-3500 psig), at 540°C (1000°F). After

passing through the high pressure turbine the cold-reheat steam (2) may have a pressure of 4.8 MPa (700 psi) at 305°C (585°F). After passing through the reheater tubes of the boiler the hot-reheat steam (3) again has a temperature of 540°C at a slightly reduced pressure. From a LWR the steam pressure is 6.8 MPa (1000 psi) at 280°C (540°F).

At the crossover point (4) the steam conditions are 1.1 to 1.2 MPa (160-180 psi) at about 360°C (690°F) for the coal-fired plant, or 280°C for the LWR.

In addition, there are extraction points in the turbine generator sets for six or seven feedwater heaters, which would permit limited withdrawal of steam at intermediate temperatures and pressures.

The condensate flow from the condenser is heated by the feedwater heaters to successively higher temperatures, so in principle feedwater may be extracted, inserted, or stored at any of the temperatures between the feedwater heaters. After the highest temperature heater, at the boiler inlet, feedwater temperatures are 215-225°C (420-440°F) for LWRs and up to 265°C (510°F) for fossil-fired plants.

Storage Media

Thermal energy can be stored in many different materials. Those materials being given the most consideration are listed in Table 3-1.

Table 3-1

MATERIALS FOR THERMAL ENERGY STORAGE

- Hot water
- Oil
- Rock, iron, or other solids
- Molten salt, sulfur, etc.
- Phase Change Materials (PCM)

All systems used with power generation are considered as high temperature systems since they must operate near or above 250°C.

The lowest cost storage medium is water. Even water purified to boiler feedwater quality has a cost of much less than $1 per Mg (90¢/ton). High temperature water (HTW), of adequate quality, also has the advantage of being usable directly in the boiler/turbogenerator cycle, without such interface equipment as heat exchangers. HTW has the disadvantage of requiring high pressure containment for temperatures much above 100°C (212°F). At 250°C, for example, the required pressure for containment is over 4 MPa (600 psia). All the other common storage media considered can be stored at close to atmospheric pressure.

Many of the major oil companies have trademarked lines of heat transfer fluids such as aliphatic or aromatic petroleum compounds, and derivatives that may also contain chlorine, fluorine, silicon, or oxygen with the maximum temperature for operation with acceptable degradation rates varying from 310°C (600°F) for relatively low cost media to as high as 400°C (750°F). Many of these fluids are low viscosity liquids, pumpable down to ambient temperature.

Less expensive than the oils are various solid materials. These range from crushed granite or other rock, through river-bed gravel, sand, pellets of sintered iron oxides such as taconite pebbles and Feolite, to ceramic spheres or bricks, cast iron balls and scrap steel. These can be used in stationary packed beds, with a heat transfer fluid passing through the bed for direct contact heat exchange to charge and discharge the bed. As the heat transfer fluid may be present in sigificant quantities to fill the voids in the packed beds, such a system concept is called a dual-media storage system. If the fluid and the solid are compatible at high temperatures, the lower cost of the solid can reduce the overall cost of storage.

Also mixtures of inorganic salts are available whose melting points are below the lowest temperature in the range over which the storage medium is to be cycled, and are liquid and stable (low degration rate) to very high

temperatures. One example used in a number of the concepts proposed is the eutectic of sodium and potassium nitrates and nitrites (0.07 $NaNO_3$, 0.53 KNO_3, 0.40 $NaNO_2$). This salt has a melting point of 148°C (288°F) and has been used in industrial processes for over 20 years as a heat transfer fluid and as a quenching and annealing bath at temperatures up to 500°C with low degradation rates. It is offered by different companies by tradenames such as HITEC (duPont) and PARTHERM 290 (Park Chemical). Other salts are available with lower or higher melting points and with higher upper temperature limits and with lower cost materials.

Other sensible storage media suggested include molten metals and alloys, such as sodium, NaK (eutectic of sodium and potassium), lead, etc. Two of the industrial chemicals with the lowest cost in reasonably pure form are sulfur and sulfuric acid. Both are liquid in the temperature range of interest for thermal storage for utility applications. Sulfur has been proposed for utility applications and sulfuric acid for another application.

Another large class of storage media are phase change materials (PCM). These materials depend mainly on the latent heat of fusion between the solid and liquid phase for energy storage. Liquid to gaseous phase change has not been used because of the large gaseous storage volume requirements. A PCM changes state over a narrow temperature range. Those that operate at a temperature compatible with the desired steam boiling pressure (constant temperature) have the advantage of a greater utilization of its stored energy since it can give up the latent energy at the desired uniform temperature. They also have the advantage over sensible heat storage of a higher energy density of storage per degree of temperature change over the limited temperature range surrounding the fusion point.

The first four materials listed in Table 3-1 all utilize sensible heat to store energy. Hot water, however, will be treated separately since the working fluid and storage media are the same material and therefore requires no heat exchangers. Hot water systems function somewhat differently from the other sensible heat types. The last two materials listed in Table 3-1 still require considerable R&D effort before they can be utilized in commercial or utility applications. Emphasis is, therefore, on the first three for near-term electric utility applications.

Transfer Media

With hot water and oil storage systems the storage material itself also acts as the transfer media. With hot oil storage the cost of the oil may be sufficiently high so that it is economic to displace part of it in the storage tank with low cost rocks or other inexpensive solids. In this dual-media case the oil is used primarily as the transfer medium with its role as storage depending on the amount of oil relative to solid material.

The lower limit on oil storage is achieved with systems that, although they use oil to transfer the energy, have all the energy stored in the rocks by draining the beds or using trickle flow of the oil over the rocks.

With hot water storage the water is so inexpensive that it is not economic to use dual media storage except in aquifers that require no containment tanks.

Containment

Low Pressure. For sensible heat storage in solids (e.g., packed beds of rock) and heat transfer liquids (e.g., oils and molten salts) at near atmospheric pressure, steel tanks are adequate. Very large storage volumes are required so multiple tanks in modular sizes can be selected for cost and convenience. The American Petroleum Institute (API) provides specifications on a range of modular sizes suitable for estimating in preliminary conceptual designs. They are cylindrical with a height under 15 m (50 ft.) and diameters from 6 m to 90 m (20-300 ft.).

High Pressure Water. Hot water containment is of two major categories (Table 3-2): underground and aboveground. Underground containment is based on geologic features that absorb most of the containment stresses.

The necessary geologic features, however, are not available everywhere so that this category of containment is site specific and not suitable for all locations. Aboveground containment, on the other hand, does not rely on features of the earth for containment and, therefore, can be located in many more places.

Table 3-2

HOT WATER CONTAINMENT VESSELS

- ABOVEGROUND
  - Steel Tanks
  - Prestressed Cast Iron Vessels (PCIV)
  - Prestressed Concrete Pressure Vessels (PCPV)
- UNDERGROUND
  - Hard Rock Cavities
    - Concrete Supported Liners
    - Compressed Air Supported Liners
  - Lined Salt Domes
  - Aquifers

For pressure containment above one megapascal (1 MPa or 145 psi) the wall thickness of steel required in steel tanks increases proportionally with pressure and with diameter, so at very high pressures and volumes the thickness becomes excessive for welding and inspection. For assurance against reduced life and catastrophic failures, boilers and pressure vessels must comply with very detailed ASME codes. Modular sizes, small enough for rail transport which permit factory assembly, welding, test, and inspection, and with wall thicknesses under 0.15 m (6 inches) are often more cost effective than field assembled larger tanks. Because special steels, often in short supply are required by the codes, the costs and delivery times for steel pressure vessels encourage consideration of alternatives.

Prestressed concrete technology is over thirty-five years old. High tensile strength steel cables and "tendons" are incorporated in concrete beams and structures for bridges and buildings, and pretensioned to place all parts of the concrete in compression under all load conditions. Application of the technology to pressure vessel containment for nuclear reactors is roughly ten years old, but has undergone rapid development. None have as yet been built for pressures and temperatures that would be typical for thermal energy storage systems (e.g., 4-6 MPa, 260°C). Prestressed concrete pressure vessels (PCPV) would be almost completely field fabricated. For the nuclear reactor application ASME code specifications have been formulated, but not for the temperatures and pressures of interest.

A more recent concept is the prestressed cast iron pressure vessel (PCIV), conceived and under development by Siempelkamp Giesserei GmbH (Federal Republic of Germany). The concept uses factory-cast cast-iron arcs, six to a full circle, which can be quickly field-assembled into multiple cylindrical layers using keyways. External cable wrapping and vertical tendons are used to prestress the cast iron to assure it is in compression. To contain boiler-quality feedwater or HTW a thin alloy steel liner would be welded in direct contact with the cast iron.

Insulation is proposed for either internal installation to avoid thermal stress concentrations in the cast iron or external to the tank but under the cables to avoid subjecting them to the higher temperatures and thermal cycling.

An alternative to pressurized containment above ground is underground containment at depths where the overburden or hydrostatic pressure is compatible with the storage pressures required. Natural caverns, excavated caverns, solution mined caverns in salt domes, and aquifer storage have been proposed. Natural caverns with a depth, volume, and location suited to plant siting would be a rarity. Hard rock that is stable and competent and at suitable depths can be found in many parts of the United States.

To contain HTW in a hard rock cavern, without loss or contamination, requires a thin liner and means to transfer the pressure stresses from the HTW to the rock without danger of rupturing the liner. One means proposed is a poured layer of high temperature, high strength concrete between the liner and the rock. This permits heat conduction into the rock, with a significant steady state temperature gradient extending for many cavern diameters. For large caverns the annual fractional heat loss is low. An alternative to concrete stress transfer is the use of a free standing liner surrounded by compressed air that is in equilibrium with the HTW pressure. This permits insulation external to the liner that can reduce heat losses, and limits the temperature rise in the rock by continued cooling of the compressed air.

Salt domes and salt beds can be solution mined to form cavities at a lower cost per unit volume than hard rock excavation. However, suitable formations are very limited geographically, and no means of installing a liner to contain high quality water has been suggested. This requires construction of a leak-proof lining to prevent further enlarging of the cavern during operation and contamination of the high temperature water. Storage of hot brine or hot oils in direct contact with the salt may require no liner but associated problems may be difficult to solve.

Confined aquifers, water laden porous layers contained above and below by impermeable layers, are common in sedimentary geographic areas which encompass much of the United States. Hot water can be injected and recovered, but of groundwater quality, not of boiler feedwater quality, so aboveground heat exchangers would be required. It is not currently known how high a temperature of injected water can be used without solution, precipitation, and other changes in the minerals of the aquifer over a reasonable life, but the temperature range would make aquifers suitable only for feedwater heating. The storage volume of a confined aquifer, however, is essentially unlimited so that the concept is suited for very large storage volumes such as might be required for seasonal storage.

Conversion to Electricity

The major conversion of interest is from expanding steam to electric energy. In some cases there are several intermediate conversions between the stored energy and the conversion to electric energy; e.g., conversion from water to steam in evaporators or heat exchange from a heat transfer liquid to boiling water.

The two major variants on the conversion of steam to electric energy are the use of an oversized version of the turbine generator that has been designed for baseload plus peaking load flow rates, and the use of a separate peaking turbine for the increased capacity, leaving the main turbine essentially unchanged in size.

In the former case, steam derived from storage can only be inserted between turbine casings, i.e., between the high pressure (HP) turbine and the intermediate pressure (IP) turbine or between the IP and low pressure (LP) turbines. Since the process of storage degrades the quality of the steam available, the point of injection is at a lower pressure level than the source thermal energy.

With the oversized main turbine, another option (Figure 3-4) is to pass a larger steam flow through the IP and LP turbines than normal by reducing the multiple steam extractions used to heat the condensate from the low temperature at the condenser output to the desired boiler inlet temperature. Manipulation of the water flow through the feedwater heaters (FWH) is known as feedwater storage. To charge storage a greater steam extraction than normal is used to heat either additional HTW or another heat transfer fluid, which transfers the energy to storage. More steam extraction reduces the power output of the turbine. For peak output, steam extraction is reduced, increased power is derived from the greater steam flow, and needed additional energy for feedwater heating is discharged from storage. Combinations of deriving steam from storage and manipulating the FWH steam extraction are sometimes used in concepts.

With separate peaking turbines (Figure 3-5) higher temperature sources of energy can be used for storage and steam generated from the stored energy is supplied to the peaking turbines. In this case a much higher ratio of peak to minimum power can be obtained.

High Temperature Water. The conversion of the stored thermal energy in pressurized HTW to steam may be done in several ways which are illustrated here because references to the terminology will occur repeatedly. In utility and industrial parlance a pressure vessel containing HTW for steam generation is called a steam accumulator or just "accumulator."

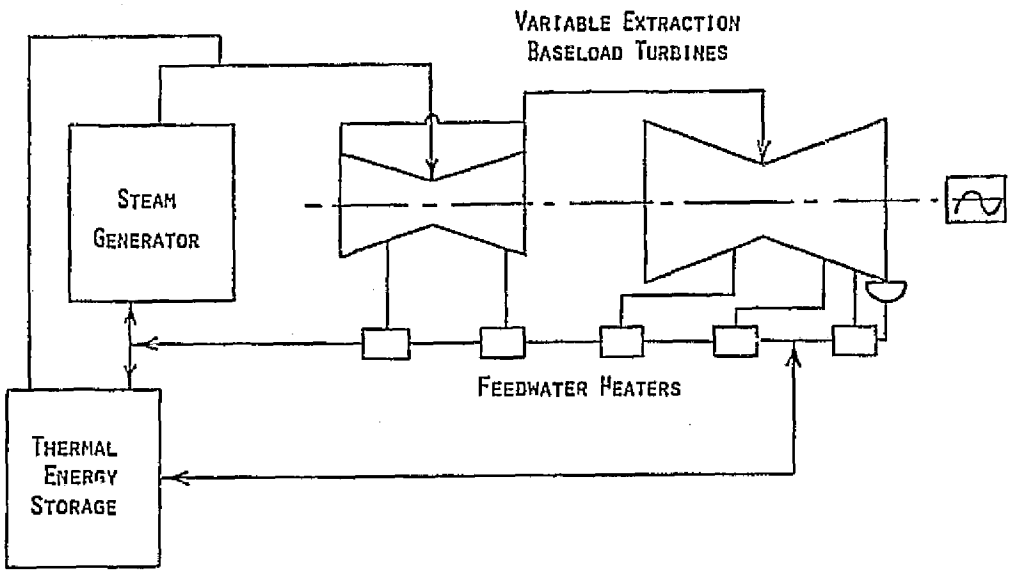

Figure 3-4. Simplified Cycle with FWS

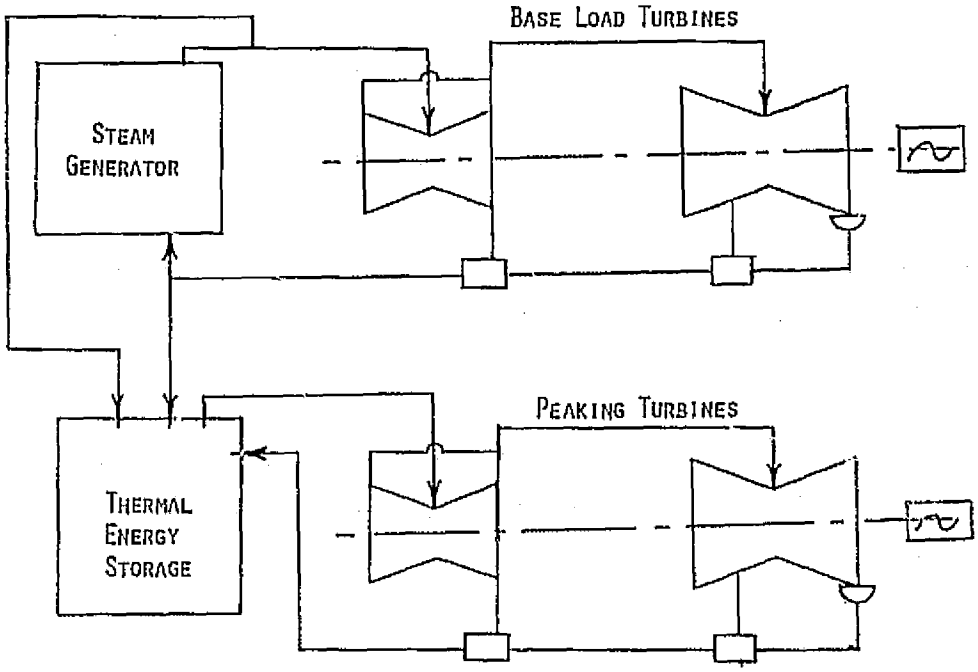

Figure 3-5. Simplified Cycle Configuration Utilizing Thermal Energy Storage

Variable pressure accumulator. The variable pressure mode of operation is shown in Figure 3-6. When fully charged, almost all the volume is filled with saturated HTW, with a small "cushion" of saturated steam (at the same temperature and pressure) above it. In this mode steam is drawn from the top; as the pressure in the steam cushion decreases, some of the water in the vessel will flash to steam. All evaporation or steam generation is internal to the vessel. As flashing to steam is continued the water will decrease in temperature, the saturation pressure will decrease and the water level will move downward by the amount of water converted to steam. If the useful range of temperature and pressure is limited, only a small fraction (15-25 percent) of the HTW volume may be flashed to steam. The remaining volume of water acts as a reservoir in which to store the thermal energy to produce steam. To recharge the accumulator, steam in injected. While, in discharging, flashing to steam occurs throughout the water volume and provides good mixing, during charging the water must be mixed with the steam to assure that the entire tank becomes heated and colder, denser strata do not remain at the bottom and reduce the energy storage capacity.

Expansion accumulator. This mode of operation is shown in Figure 3-7. When fully charged, the accumulator is almost full of HTW with a small steam cushion, as in the variable pressure mode. As hot water is drawn from the bottom during discharge, enough of the contained HTW flashes to steam to fill the tank volume. As indicated in the figure, this flashing reduces the pressure and temperature of the saturated water and steam slightly, but not nearly as sharply as in Figure 3-6. All of the water can be removed with a reduction in pressure of only about 30 percent. Alternatively, if it is thermodynamically valuable to keep the pressure and temperature uniform during discharge, a small amount of saturated steam from the source may be injected at the top as water is removed from the bottom.

The HTW removed must be flashed to steam in evaporators external to the expansion accumulator, as shown in Figure 3-7. The water is throttled

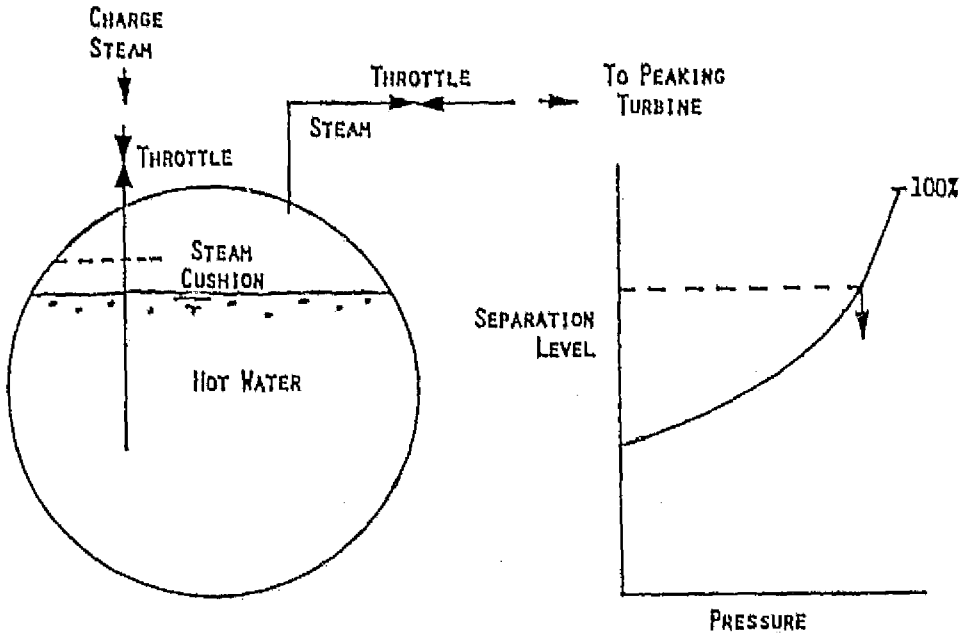

Figure 3-6. Variable Pressure Accumulator

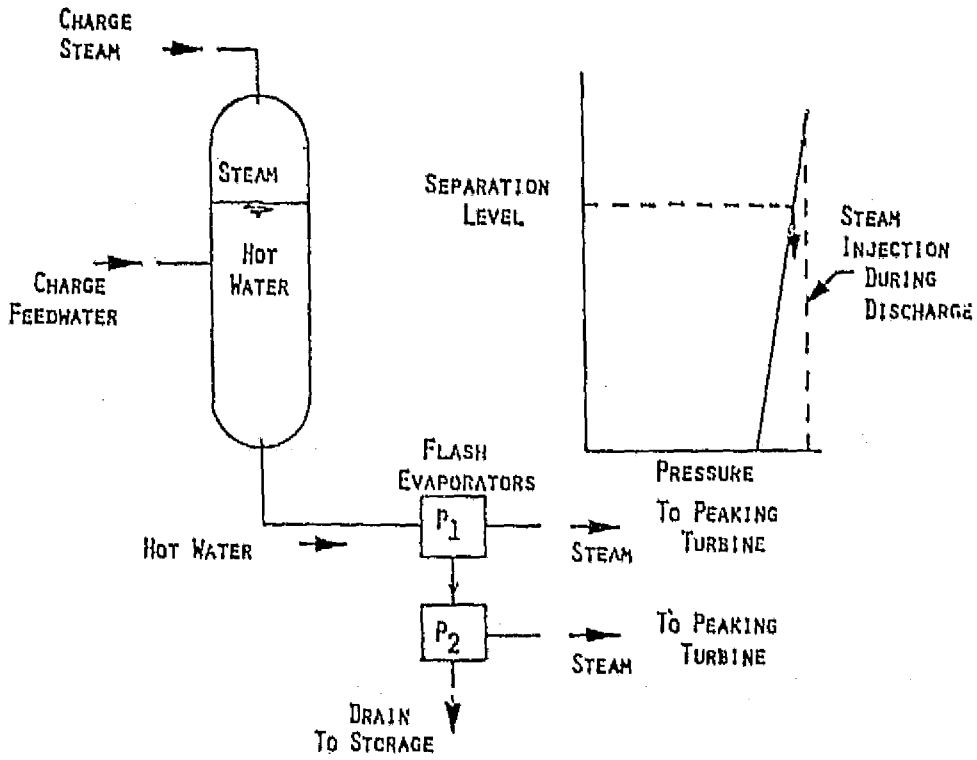

Figure 3-7. Expansion Accumulator with Flash Evaporator

to a pressure P_1 lower than the storage pressure, and the resulting steam and water are separated in a drum. The steam is dispatched to a turbine. The water may be throttled to a still lower pressure P_2 for generation of more steam at this pressure. This can be dispatched to a separate inlet on the same turbine or a separate peaking turbine. Additional stages of flash evaporators may be used similarly.

During discharge the water drained from the last flash evaporator must be collected and stored. Its volume will be more than half of the initial volume of HTW but it is at a low pressure and temperature so this "cold storage" is not costly. The variable pressure accumulator also required cold storage, but of a smaller volume corresponding to just the volume of water flashed to steam.

To recharge the expansion accumulator requires simultaneous injection of hot water and saturated steam until the whole volume except for the small steam cushion is refilled with saturated water at the desired pressure and temperature.

Displacement accumulator. In a third mode of use an accumulator is always completely filled with water. When fully charged with thermal energy it is filled with HTW at the desired temperature; when fully discharged the water contained is all cold. As shown in Figure 3-8, hot water is injected at the top during charge and removed from the top during discharge. Cold water leaves and enters at the bottom. Since hot water is less dense than cold, it will float at the top. A fairly sharp temperature gradient called the thermocline separates the hot and cold water. It remains stable and sharp if mixing currents are avoided, and is ultimately limited by the thermal conductivity of water.

A major problem with the displacement mode is the creation of high thermally induced stresses in the pressure containment vessel as the thermocline moves up and down during each cycle. Insulation on the inside of the tank, if feasible, could be used to minimize this problem.

Although the temperature varies in the accumulator, the pressure remains constant during the entire cycle.

During discharge one or more flash evaporators are used to generate steam for the peaking turbine(s). The drain from the evaporators and the condensate from the turbines is returned to the vessel as cold water, so the large cold-storage described for the expansion mode is not required. However, since hot water and cold water differ in density a small supplementary storage is needed for the net change in volume.

During charge, steam is mixed with cold water taken from the bottom of the tank to raise the water to the desired temperature. Cold water equivalent in mass to the steam is returned to the boiler inlet feed-water to generate more steam.

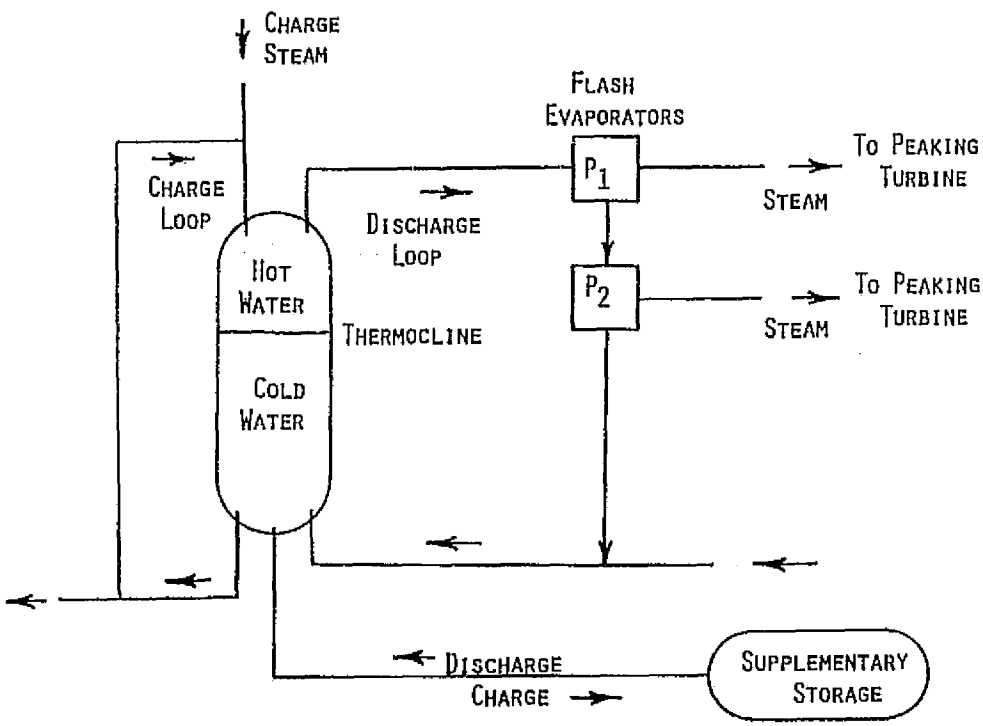

Figure 3-8. Displacement Accumulator with Flash Evaporators

Sensible Storage with Heat Exchangers. When the storage medium is not HTW, the stored thermal energy must be transferred to water before conversion to steam can take place. This requires a heat exchanger. While direct contact heat exchangers are possible, in which the storage medium or input heat transfer fluid is in direct physical contact with the output heat transfer fluid, e.g., HTW, the water quality requirements for boiler and turbine operation make physical separation of the two fluids necessary. An example of the heat exchanger complement required when an atmospheric pressure sensible heat storage system is used to generate steam is shown in Figure 3-9.

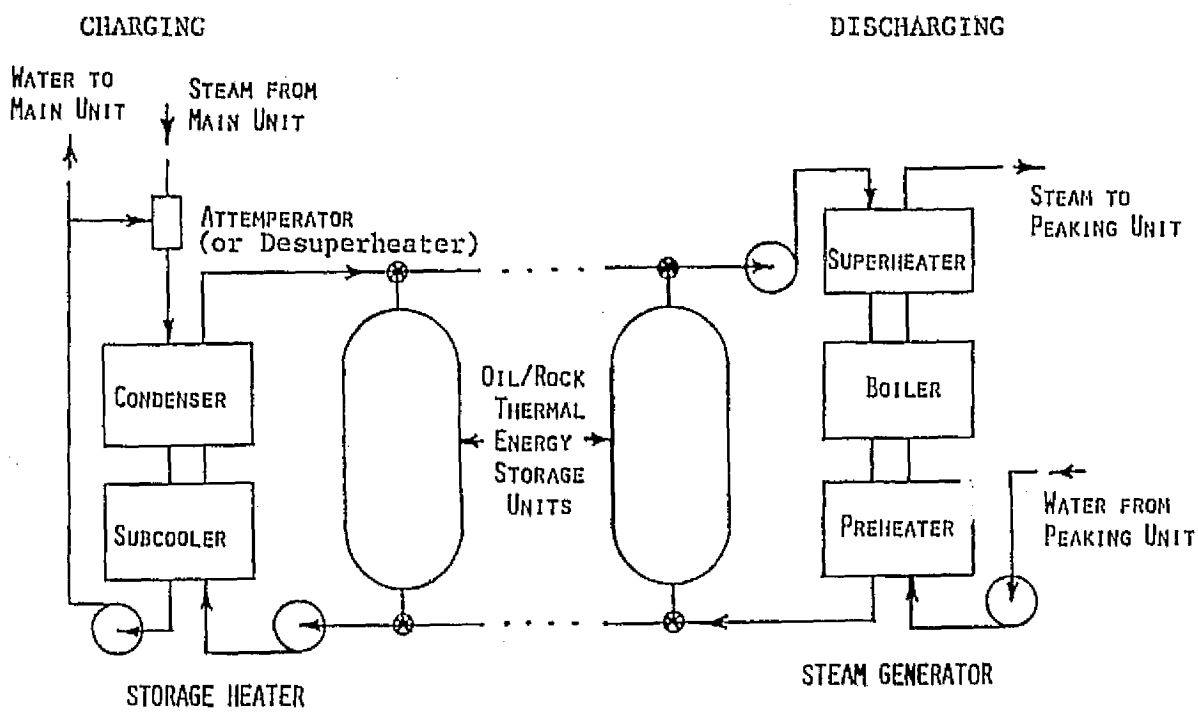

Figure 3-9. Heat Exchangers for a Sensible Heat Storage System

In the system illustrated, rocks are contained in one or more tanks at near atmospheric pressure. Hot oil is used as the transfer medium and also as the storage medium when filling the voids between the rocks. Primary

storage is in the rocks which occupy about 75% of the tank volume and can store about 75% of the thermal energy. Although rocks are more dense than oil, the specific heat per unit volume is about the same for the two.

Steam from the heat source chosen can go through three specialized heat exchangers in cascade. The entering steam may be superheated, i.e., at a temperature considerably higher than the saturation temperature for its pressure. The first heat exchanger or desuperheater removes the superheat producing saturated steam. While the desuperheater can be designed as a shell-and-tube HX, a simpler, less expensive alternative is to spray just enough water into the superheated steam to remove the superheat. This is called an attemperator and is shown in Figure 3-9. The condenser then removes the latent heat of vaporaization at constant temperature. The condensate water at saturation temperature may be subcooled in a third heat exchanger to further increase the thermal energy stored, and to match the temperature at which the output water is to be reintroduced into the source cycle.

On discharge of the storage, water (condensate) from the peaking turbine is heated successively in a preheater (to raise it to saturation temperature), in a boiler (to add latent heat at constant temperature to convert it to steam), and a superheater (to increase the steam temperature above saturation to the extent made possible by the maximum temperature available in storage).

The storage unit shown comprises multiple packed rock beds with hot oil as part of a dual-media system and as the heat transfer fluid. The storage tanks operate in the displacement mode with a thermocline separating hot and cold oil/rock, as described for HTW accumulators.

A disadvantage of the sensible storage systems when used with Rankine systems is that on the steam or water side of the heat exchangers a major fraction of the energy transfer to or from the water is at constant

temperature during boiling or condensing. For the heat exchangers shown in Figure 3-9 representative temperature profiles are illustrated in Figure 3-10. The temperatures of the fluids are shown as a function of the thermal energy or enthalpy transfer in the various heat exchanger components.

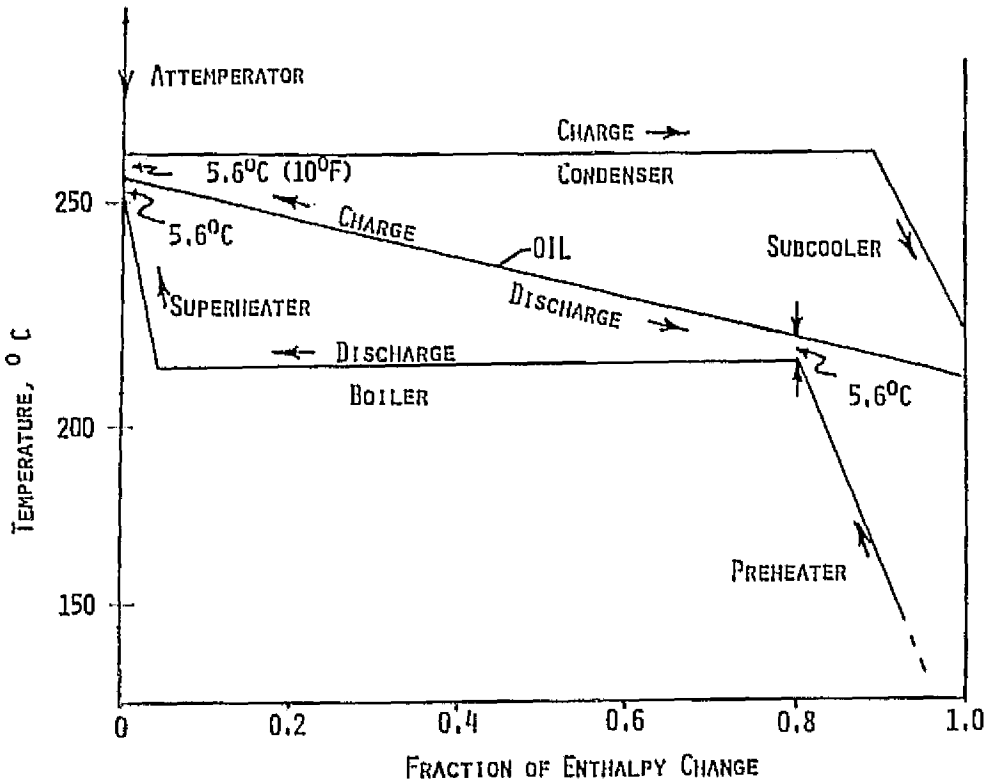

Figure 3-10. Representative Temperature Profiles with Sensible Heat Storage

Discharge steam pressure for the case illustrated is 2.01 Mpa (compared to 4.86 Mpa for the charge steam) for the saturation temperature of 212.8°C, which is limited by the slope of the oil temperature line and the two pinch point ΔT's between the oil and steam and the oil and water. Because of the large difference in relative heat content between steam and oil about 10 to 20 times as much mass of oil must flow through the heat exchanger as mass of

steam. Decrease in the slope of the oil temperature line requires an increase in the ratio of oil to steam flow but this decreases the temperature difference in the oil and rocks between charge and discharge and requires an increase in storage volume and consequently storage costs.

Final oil temperature is limited by the approach ΔT or pinch point (shown in the illustration as $5.6^{o}C$). If the selected ΔT is too low the heat exchanger area must be unreasonably large to transfer the heat, thereby increasing the cost of the heat exchanger.

This drop in steam conditions between the charge and discharge states decreases the efficiency of storage since less power can be generated from the lower pressure discharge steam during peaking than was available for power from the higher pressure charge steam.

When a similar type storage unit is used to store energy for feedwater heating, only two heat exchangers are required - one for heating the transfer fluid during charging and the other for heating the feedwater during discharging.

Other Ancillary Equipment. The need for pipes, pumps, valves, control systems, safety systems, and other ancillary equipment should not be forgotten nor treated lightly in considering concepts. These contribute a substantial but not major part of the capital costs, and for pumps particularly a required diversion of useful power output. For the preliminary screening of Task I, these are considered as lumped into the installed costs of the major components described.

Proponents and Concepts

The literature collected represents the state-of-the-art, both in experimental data and in concept formulation. Many of the references contained useful data on the many elements, but did not describe a concept of a thermal energy storage (TES) system directly applicable to the objectives of this study: near-term utility applications for conventional coal and nuclear plants. Such references were considered source material.

However, a large number of references proposed and described TES systems or major components thereof that could be considered relevant to the study. Either they were originated with this specific application in mind, or it was clear that some important and perhaps novel features of their proposed concepts should be considered in the preliminary screening process in order to explore a wide range of approaches.

These proposers or proponents of concepts were identified and their concept was defined in outline form as it might be applicable to this study. In Table 3-3 a list of proponents, the institution(s) and one or more individuals directly associated with the project or reference describing the concept, is given. It is not implied that said institutions or individuals are advocates or originators of the concepts, but only that they were named in the source material used.

The proponents listed on Table 3-3 are classed principally according to the storage medium used: HTW, other sensible heat materials, and phase-change materials. Within each class some institutions and individuals are grouped as joint authors or as describing closely related concepts.

The numbers assigned to proponents refer to Reference 3-1, Volume 2, Appendix C, in which the outline concept definitions formulated are given. In some cases two or more concept variants will be found for the same proponents in that appendix.

In the course of Task I telephone and/or correspondence contacts were made with almost all of the institutions or individuals listed in Table 3-3. In addition, many additional sources were consulted including authors of the references considered as sources rather than proponents.

Table 3-3

PROPONENTS OF CONCEPTS

HTW Concepts		
1. Graz University (Austria) Waagner Biro (Austria) Siempelkamp GmbH (FRG) Deutsche Babcock (FRG)	Paul V. Gilli Georg Beckmann F. Schilling, L. Gülicher E. Bitterlich	PCIV
2. R&D Associates	J. Dooley, S. Ridgway	Concrete Stress Supported Hard Rock Cavern
3. Ontario Hydro Atomenergi (Sweden)	A.G. Barnstaple, J.J. Kirby Peter Margen	Air Supported Hard Rock Cavern
4. University of Houston Subsurface, Inc.	R.E. Collins K.E. Davis	Aquifers
5. General Electric-TEMPO	C.F. Meyer	Aquifers
Other Sensible Heat Concepts		
21. EXXON Corp.	R.P. Cahn, E.W. Nicholson	Hot Oil/Feedwater
22. McDonnell Douglas Rocketdyne	G. Coleman J. Friefeld	Hot Oil/Packed Bed
23. Martin Marietta	F. Blake	Oil/HITEC and All HITEC
24. Honeywell, Inc.	J.C. Powell, R.T. LeFrois	Oil/HITEC
25. Bechtel Corp.	William Stevens	Oil/Retrofit
26. General Atomic ORNL	R.N. Quade, D. Vrable E. Fox, M. Silverman	HITEC/HTGR
27. General Electric-Space Div.	E. Mehalick	Oil/Drained Bed
28. University of Minnesota	M. Riaz, P. Blackshear	UG Rock Beds/Hot Air
30. Jet Propulsion Laboratory	R.H. Turner	Steel Plates
31. Energy Conversion Engrg.	Allen Selz	Molten Sulfur
32. Boeing Company	J. Gintz	Refractory Brick/H_e
33. University of Houston Subsurface, Inc.	R.E. Collins K.E. Davis	Oil in Salt Domes
Phase-Change Materials Concepts		
41. Xerox Corp.	J.A. Carlson	HX Subsystem
42. Naval Research Laboratory	T.A. Chubb	Salt/Terphenyl/Steam
43. Comstock & Westcott, Inc.	B.M. Cohen	NaOH
44. Inst. of Gas Technology	J. Dullea, H. Maru	Carbonates
45. Clemson University	D.D. Edie	Immiscible Fluids HX
46. Honeywell, Inc.	R.T. LeFrois	$NaNO_3$ Slurry/Scrapers
47. Boeing Company	J. Gintz	Fluorides/Helium
48. Grumman Corp.	A. Ferrara	HX Concepts
49. General Electric-CR&D	H. Vakil, F. Bundy	Immiscible Fluids HX
50. Rocket Research Corp.	E.C. Clark	H_2SO_4
51. Swiss Federal Inst. for Reactor Research	M. Taube	Immiscible Fluids HX

PRELIMINARY SCREENING

The preliminary screening involved selecting a set of twelve concepts of thermal energy storage which could be added later to coal and nuclear plants for a more detailed study of a complete utility plant. The many concepts offered by proponents were reduced in number to twelve by deleting some and combining or integrating others based on a set of criteria defined below.

Criteria

The following criteria were used qualitatively in this preliminary screening and quantitatively later in selecting the concepts for Task II:

- Be Compatible with Near-Term Application
- Be Economically Viable in the Mid-Term
- Meet Utility Operational Requirements
- Be Diverse in Type
- Be Environmentally Sound
- Have Conservation Potential
- Have Potential for Future Growth/Improvement

Each of these will be described briefly with an indication of the major sub-criteria therein.

Compatible With Near-Term Application. The phrase near-term has been interpreted to mean that the concept must be able to be demonstrated and operated before 1985 to the extent that in and after 1985 a utility can decide with confidence to order a plant incorporating thermal energy storage systems for load leveling.

The primary deterrent for near-term application is technical risk: the level of uncertainty in the technologies involved, and in the commitments of effort needed to resolve the uncertainties. "Confidence to order" will require

resolution of problems in all the other named criteria, but the primary emphasis in this criterion is on the time scale of technologies to achieve the desired performance.

Economically Viable in the Mid-Term. Economic viability in the mid-term, 1985-2000, implies first the resolution of the technical problems and successful demonstration, then that fixed charges and variable costs attributable to the plant modifications required by a concept lead to an annual cost per kilowatt of incremental capacity that is less than or comparable to the alternative ways of achieving such incremental capacity and load leveling. That is, it must compete with the other thermal energy storage concepts considered in this project, as well as with other forms of storage and peaking capacity.

The last two, nonthermal storage and peaking capacity, are not to be considered in Task I but must be ultimately addressed in recommendations concerning development of concepts in Task IV. Task I must consider the comparative economics of the concepts defined herein.

Utility Operational Requirements. Electric utilities have conventional methods of assuring the delivery of electricity reliably, to all customers when needed, over their entire service area. To be considered, a new system must meet their needs in the various categories outlined briefly below.

Site flexibility. To serve customers effectively there is need for plants distributed over their service area. The geologic needs of a concept, such as competent hard rock, salt domes, or aquifers may not be met in the desired load area. Water needs, land requirements, aesthetic acceptability of a conceptual design, or catastrophic risks to the community beyond the plant area may limit siting flexibility.

Operating flexibility. Principles of dispatching plants to meet current and expected load fluctuations include lowest incremental cost, and ability to maintain high reliability. Some aspects of the thermal

energy storage systems and the associated conversion equipment that will be of interest include the following:

--Startup time

--Rapid load following

--Part load as well as full load efficiency

--Minimum safe load

--Control and transient stability

Reliability. For the thermal energy storage load leveling systems, the technologies employed should be tested adequately to insure low forced outage rates. In selecting concepts, those which permit continual operation of the main turbine generator despite a forced outage of the peaking turbine or parts of the storage system have added value. Ability of either or both turbines to meet some level of load from thermal storage when the boiler island output is reduced to zero also has value.

One of the significant although unquantified benefits expected from thermal energy storage load leveling systems is improved reliability and lifetime of the boiler island or steam generator if its required output does not fluctuate.

Operating hazards. The addition of a thermal energy storage load leveling system adds operational flexibility, but may, if improperly designed, jeopardize the conventional system with which it operates. The reliability and life of the turbine generator system are critically dependent on a very carefully controlled quality of boiler feedwater. Unwanted solids, liquids, or gases in the feedwater can impair boiler heat exchange by scaling, can cause corrosion in the boiler or turbine, can cause erosion or even blade breakage if sizable pieces of scale enter the turbine. The steel used in the turbine, in heat exchanger tubes, and in pipes must have special properties. The liners used for HTW storage and the heat exchangers for other storage media must have these same properties.

When the sensible-heat storage or heat transfer fluids have properties which would cause major system damage if they leaked into the feedwater loop, due precautions must be taken that leakage is avoided, or is in the opposite direction and is quickly detected.

Some of the concepts of turbine operation require off-design-point operation of the turbine. Thermal stresses, transient stresses, different vibration modes and all other possible consequences of the deviations from conventional practice must be considered.

Diversity. Even if it should appear that a dozen variants of one particular concept were superior on all criteria to all the other concepts, it would be unwise to so narrow the set to be considered in more detail in the second half of Task I. The preliminary nature of this first screening relies in part on proponents' data and analysis, and each analysis cannot be relied upon to be comparable in assumptions to that of other proponents and concepts.

To the extent possible within the limits of twelve or less surviving concepts, major components and concepts not clearly rejected by failure to meet important criteria should be retained. Closely related concepts and variants may be combined into a single concept to accomplish this objective.

Environmentally Sound. In part the environmental constraints are subsumed in the above criteria in that siting flexibility, economic viability, and operational flexibility all are affected by the national and local environmental standards and requirements. As a summary in its own right, environmental effects to be evaluated in comparing thermal energy storage load leveling systems include:

- Air or water emissions such as: conventional pollutants, NO_x, CO, particulates, hydrocarbons, radioactive material
- Aesthetics, water use, and land use
- Special emissions/waste disposal problems

  --Leakage of storage oils or salts

  --Fumes from degradation of materials

--"Blowdown" products of periodic makeup or replacement

- Catastrophic risks

  --Seismic damage

  --Storm or flood damage

  --Pressure vessel failure

  --Toxic material leakage into air, or surface or ground water

  --Fire or explosion danger from flammable materials.

Conservation Potential. As all thermal energy storage systems will suffer some losses and degradation of the energy through charging and discharging storage, more energy may be required than from operating a baseload plant in a load following mode. However, certain comparisons will show energy conservation, in the sense of conserving the scarcer and more critical resources, e.g., oil and gas.

To the extent that the concepts here considered replace the use of oil in gas turbine peaking capacity, they represent conservation of oil and progress toward reduction of imported oil. If the heat rate of the low-capital cost gas turbines is higher than the incremental heat rate of a thermal energy storage system, including its turnaround efficiency, there is a net saving of energy. If the thermal energy storage system replaces old, low-efficiency fossil plants that have been used for intermediate range duty, there may be a net savings in energy.

Finally, if the turnaround efficiency is higher than that of an alternative storage system, such as pumped hydro storage, conservation of energy may be achieved.

Broadly Applicable. The commercialization of a system is easier if its range of applicability is large, both geographically and in size and type of heat source. All else being equal, a system that can be applied to nuclear plants and to small and large fossil plants has more market potential and is preferred to specialized types.

Potential for Future Growth/Improvement. Some systems can be synthesized from components that are considered near-term, but could be improved in performance or cost if technologies not yet demonstrated can be developed. (For example: molten salt alone is near-term, molten salt and compatible packed bed may not be near-term.)

Some storage materials may have a high current price because of low demand. The effects of large continued demand should be considered.

Some systems may be more sensitive than others to net escalation of the fuel used by the load leveling plant (coal or nuclear), or by the competing peaking options (oil or gas). Long-range as well as near-term economic relations should be considered.

The Screening Process

The screening of the many defined concepts (numbered as in Table 3-3) and their variants down to a maximum of twelve, without detailed analysis, required primary emphasis on the first four of the above criteria.

Descriptions of many systems by proponents were often not of complete systems, or were described for another application such as solar-thermal storage. On the other hand, many of the concepts and variants defined had much in common, either in components or in system configuration, and did not require separate analysis. It was clear that a containment concept proposed to operate with one system configuration of conversion to steam and to electricity can work perhaps equally well with alternative conversion concepts, and similarly that each conversion concept can work with several alternative containment concepts. With sensible heat storage, the various alternatives of oils, salts, metal, rock, sulfur, etc., are virtually interchangeable within a configuration, with cost of storage medium, compatibility with other materials, stability at high temperatures, and characteristics that determine heat exchanger costs as the principal parameters to determine a relative ranking.

Each of the concepts defined (Reference 3-1, Appendix C) contained a feature or features that are different. To meet the diversity criterion and reduce the set to twelve candidate concepts for further study, combinations of concepts that incorporate one or more of the unique features appeared to be necessary. Thus, the candidate concepts chosen are often an integration of the concepts of several proponents, and will be called Selections, or Selected Concepts.

A summary figure and description of each of the Selected Concepts is given in Reference 3-1, Volume 1, Section 3. These will not be repeated here other than the listing and description given in Table 3-4. A brief discussion of each selection follows.

Selected Concepts

The first seven selected concepts use high temperature water (HTW) as the storage medium but differ in the form of containment and conversion to electricity. The next four use sensible heat storage in media other than HTW and the last concept utilizes a phase change material (PCM).

#1 - Prestressed Cast Iron Vessels (PCIV). This selection features the prestressed cast iron vessel (PCIV) as the containment for high temperature water (HTW) under pressure.

The proponent for this concept is Professor Paul V. Gilli, now with the Graz University of Technology, Austria (Reference 3-2).

The source is both live steam and feedwater to fill an expansion mode accumulator. One stage of evaporator steam generation is used with the steam going to a peaking turbine and the water discharge of the evaporator being delivered to the boiler inlet as feedwater. The same configuration could be equally well used with prestressed concrete pressure vessels (PCPV) or steel vessels.

Advantages. The PCIV direct costs per unit volume of capacity as optimized by Gilli are lower than estimates on PCPV and steel vessels made by others

Table 3-4

SUMMARY OF TWELVE SELECTED CONCEPTS

Selected Concept Number	Source	Storage Medium	Transfer Medium	Containment	Conversion	Other
1	Steam	Hot Water	Water	PCIV	Expansion-Peaking Turb.	One Evaporator
2	Steam			PCPV	Var Press-Peaking Turb. or Same as No. 1	
3	Sat-Water From Steam Drum			Slab Steel	Feedwater	
4	Steam			UG-Concrete	Var Press Acc-Peaking Turb.	
5	Feedwater			UG-Comp Air	Displacement-Feedwater	
6	Steam			UG-Comp Air	Displacement-Peaking Turb.	Three Evaporators
7	Feedwater			Confined Aquifers	Feedwater	$<400^{o}F$
8	Steam	Hot Oil	Oil	Low Pressure Steel Tanks	Feedwater	Dual Tanks
9		Oil/Rock	Oil		Peaking Turbine	Thermocline Tank
10		Oil/Molten Salt	Oil/Molten Salt			2-Stage, Dual or TT
11		Molten Salt	Molten Salt			Dual Tanks
12		Phase Chg Material	Molten Salt			Direct Contact

(respectively 1248, 1600, 4000 $\$/m^3$). The cycle combines the merits of a feedwater storage system and a flash evaporator system. A turnaround efficiency of 0.80 to 0.85 is estimated. PCIV shares with PCPV a safety advantage over steel pressure vessels. PCIV can be easily site assembled from factory made castings.

Disadvantages. Cost of containment is higher than underground containment concepts. While small sizes of PCIV at moderate pressures have been built and tested, nothing has yet been demonstrated at the size, temperature, and pressure levels required for this application (e.g., 6 MPa, 250°C). Current concept requires external thermal insulation, part of which, under the prestressed cable shoes, must be pressure resistant. The cast iron operates hot. Effects of thermal and pressure cycling on the prestressing system have not been tested. This is the reason Gilli chooses the expansion accumulator mode, as most constant in P and T. (Note: Siempelkamp indicates they are developing an insulation internal to the liner which would be compatible with boiler quality feedwater but no details are available.) The technology resides in Siempelkamp; transportation costs to the U.S. would be large; alternatively, developing a comparable technology in the U.S. by license or independent development may not be "near-term available."

#2 - Prestressed Concrete Pressure Vessels (PCPV). Prestressed concrete has been used in many applications, and as pressure vessels (PCPV) for nuclear reactor secondary containment for over 10 years. Bechtel Power Corporation lists 59 PCPV's they have engineered or constructed. There has been no specific proponent for a TES system using PCPV for thermal storage, but they can be considered for any HTW storage concept requiring pressure containment. None have been built or tested for the pressure and temperature range of interest (the reactor containment vessels were rated under 0.5 MPa (60 psi)).

The candidate concept selected is shown with a variable pressure accumulator mode, for diversity, although as indicated it can be considered with the steam cycle configurations of Selections #1 and #4 as well.

Advantages. PCPV is considerably cheaper per unit volume of capacity than steel vessels for comparable duty, according to reports both by O'Hara and

Glendenning. It can be built on site in large unit sizes. The redundancy of prestressing cables and tendons reduces the chances of catastrophic failure by cracking. There is a high level of confidence in the technology through experience (but not for the pressures and temperatures of interest).

Disadvantages. Not built and tested for temperatures and pressures of interest. More costly than PCIV (if the cost assumptions by the several estimators are comparable). Must be site assembled, labor intensive, long construction time. Bulkier than PCIV or steel, external size much bigger than internal capacity; possible aesthetic/land-use objections. PCPV's require cooling to protect the concrete and reinforcing bars from high temperatures; the cooling systems are expensive and imply thermal energy losses.

#3 - Steel Vessels. The use of thick wall steel tanks as pressure vessels has been referred to in Selections #1 and #2. They have long been used. Experience in construction, inspection, test, and use of them is long standing; they are a mature technology. At high temperatures and pressures the cost of containment in them is high compared to the estimates made for PCPV and PCIV. However, steel pressure vessels definitely qualify as near-term available; the others may not, and the cost estimates on the undeveloped systems may prove to be overly optimisitic.

In a recently completed contract, the Jet Propulsion Laboratory explored the use of steel as a thermal storage medium and containment means (Reference 3-3). A number of concepts were proposed and explored sequentially. Initially, emphasis was put on steel as the storage medium; thick bars or slabs contained passages for HTW which would heat the steel. Recognizing that steel was far more expensive as a storage medium than water, the emphasis shifted to a configuration with thick slabs of common steel electroslag welded to form a square channel to contain HTW. The steel is 60 percent of the area, 90 percent of the weight, and stores 40 percent of the thermal energy. Stacking such units crosswise is postulated to make a compact, stable storage system.

A distinctive feature proposed in Reference 3-3 is deriving the HTW from the steam drum inside the fossil-fired steam supply. Water here can be at over 375°C (700°F) and at 17 MPa (2500 psia). Interfacing charging and discharging at this point would require major design changes in the steam supply, as discussed earlier. However, the containment concept can be applied to many other TES cycles using HTW storage.

Later concepts abandoned the thick slabs of steel and proposed many small diameter tubes with a wall thickness designed for the pressure, and with sand packed between tubes as the storage medium.

Advantages. Steel pressure vessels are near-term available with years of design and operating experience at pressures and/or temperatures over those required for thermal storage. Made in modular sizes they can be factory built, inspected and tested, and transported by available rail cars. ASME codes spell out in detail the requirements on materials, methods of construction, inspection, test, and use for the protection of the user and the public. Steel pressure vessels will be used for other components of TES systems (e.g., evaporators, heat exchangers) and of the utility plant.

Disadvantages. Cost is a major disadvantage. Any emphasis on steel as storage is probably even more expensive than steel as containment. The volume to be contained for thermal storage may be in the hundreds of thousands of cubic meters, a far larger volume than most pressure vessel applications. Although building and testing to code should minimize the danger of catastrophic failure, the large number of modules at risk may prove unacceptable.

#4 - Underground Cavity - Concrete Stress Transfer. This is the first of three candidate concepts featuring underground storage of high temperature water (HTW). Selection #4 features an excavated cavity 30 meters or more in diameter, in competent hard rock, with a steel liner fabricated within the cavity and high-temperature high-strength concrete poured between liner and rock for stress transfer. The means of stress transfer distinguishes this candidate concept from Selections #5 and #6.

The proponents are James Dooley and his colleagues at R&D Associates, Marina del Rey, CA, (Reference 3-4). In an excellent section on *Cavity Considerations*, the procedures and precautions for excavation of cavities are explained. A shaft is excavated to a depth where the overburden will sustain the pressure of storage. Upper and lower horizontal tunnels at this depth provide access to the planned locations for one or more cavities. A small shaft is drilled between the upper and lower tunnel and the rubble or muck from all subsequent excavations is removed via the lower tunnel and the main shaft. Spherical cavities from 30-100 m (100-300 ft) in diameter are described as a baseline concept but it is indicated that shape of cavity may be of secondary importance.

In excavating the cavity from the top down, by drilling, blasting and removal of muck, additional operations are needed such as rock bolting to reduce slippage of rock along natural weaknesses; grouting, and shot-creting to control water flow and reinforce weak areas; and mounting panels of the steel liner to rock-bolts. After welding and X-ray inspections, the high strength concrete is injected between liner and rock.

The use of the lined cavity proposed is as a variable pressure accumulator. Live steam charges the water in the cavity to saturation temperature. For storage discharge the pressure is reduced and a fraction of the water flashes to steam. This mode requires piping only steam through the vertical shaft; expansion mode or displacement mode accumulators would require pumping HTW to and from the surface against a head of 300-600 m while maintaining saturation pressure in the HTW in all pipes.

Including both the estimated direct costs for a 60 m (200 ft) diameter cavity and for the vertical shaft, the estimated cost of storage is about 250 $\$/m^3$, considerably less than the aboveground pressure containment. By restricting the fraction of the water flashed to steam, hence the change in pressure and temperature of the steam, a turnaround efficiency of 90-95 percent was estimated by the proponent.

Advantages. Low cost of storage per unit volume. This permits reduced demands on pressure swing for high turnaround efficiency. Unit size of

storage volume can be quite large; multiple storage volumes can share a common shaft for further cost reductions. Low insulation cost, and low "equilibrium" thermal losses. Low visibility of storage system; low hazards to personnel and public. Excavation technology is near-term available where precedent exists.

Disadvantages. Underground cavities in competent rock are limited in siting. Map estimates show about 30 percent of the area of the U.S. as likely sites; these areas probably touch utility areas serving over half the U.S. population. Excavation technology at the larger sizes (100 m diameter) stretches current technology and may be more costly than estimated. Systems exposing the rock to high temperature and periodic pressure cycling have not been built and demonstrated.

#5 - UG Cavity - Air Supported. Following a concept described by Peter Margen of Studsvik Energiteknik AB Sweden (formerly AB Atomenergi Sweden), Ontario Hydro of Toronto, Canada (References 3-5 and 3-6), proposed and explored an underground cavity for HTW storage in which the stress in a thin steel liner is minimized by use of compressed air between liner and rock. Stress transfer is by compressed air at or above the saturation pressure, rather than by concrete as in Selection #4. An equalizing tank connected to both HTW and air limites pressure differences to that caused by the head of water in the tank. Excavation, shaft, and piping costs are to a first approximation much the same as for Selection #4.

The displacement mode is used and the tank is always filled with water. The power conversion concept used is feedwater storage. To charge storage, extra HTW is generated by excess steam extraction. To discharge storage, HTW is withdrawn from storage and delivered to the steam supply system inlet, and an oversized main turbine produces more power because of reduced steam extraction. Ontario Hydro proposed a limited size of tank, of domed cylindrical shape, but postulates that the excavation can be a gallery 30 m wide and as much as ten times as long, so multiple tanks can be placed within the gallery.

Advantages. The same advantages for underground cavities apply as for the previous selection. Compressed air stress transfer permits external thermal insulation on the tanks; the compressed air is cooled so that rock temperatures are near ambient.

Disadvantages. Many of the disadvantages for the previous selection also apply. Site selection is limited by geology. Leakage of compressed air out of, or of groundwater into the cavity may be hard to control by grouting or shot-creting. Has not been demonstrated. Use of displacement mode of storage with a thermocline imposes thermal stresses on the steel tank. HTW must be pumped down and up again without flashing to steam; extra pumping may be costly. A purely feedwater storage system can provide only a limited amount of peaking capacity. Without major changes in the steam supply, peaking is limited to about 15 percent of rated reference plant capacity; to attain even this much requires turbine modifications and redesign that may not be near-term available for large nuclear plants.

#6 - UG Cavity - Evaporators. This candidate concept uses the underground cavity technology with compressed air stress transfer as described in Selection #5. The unique feature is a three-stage steam generator using flash evaporators with peaking turbines instead of feedwater storage. A larger power swing (ratio of peaking capacity to rated capacity) is achievable than with pure feedwater storage. The displacement mode with thermocline is still utilized in the underground cavity.

Advantages. The principal advantages of Selections #4 and #5 apply. Use of the three-stage evaporator permits a larger power swing. The peaking turbines are available technology, using modules, e.g., 2 two-flow LP turbines, to stay within the capabilities of available sizes.

Disadvantages. These are as listed for the preceding underground cavity concepts.

#7 - Aquifer Storage. Storage of HTW in acquifers, i.e., porous layers of water-saturated gravel, sand, or sandstone confined between impermeable layers, can have an extremely low energy related cost. The aquifer is available over a wide range of sedimentary geologic areas without excavation or modification. However, the power related costs are significant for they include the cost of drilling and casing the wells, the cost of pumps and pumping energy, and the cost of heat exchangers. A doublet well concept providing two well temperatures permits recycling hot and cold (or warm) water to and from the same aquifer to minimize resource usage (Reference 3-7). The temperature range over which aquifer storage can be effective is unknown; experiments or demonstrations have not been made except at nearly ambient temperatures.

A temperature range of 100-200°C is believed feasible and could be usable for feedwater storage, district heating to supply space heating, residential hot water, and industrial heat loads in this temperature range. This use of storage may be an adjunct to some of the other candidate concepts for storage, in that a daily cycle of storing thermal energy during off-peak hours, thus modifying the electric output supply, can be combined with seasonal withdrawal from aquifer storage for space heating.

Advantages. Very low cost of storage per kWh (essentially zero: only losses and maintenance are energy related). Capacity for very large amounts of energy storage for weekly and seasonal cycles as well as small daily cycles.

Disadvantages. While aquifers are widely available, their usability will be site-specific. Some areas are not suitable. There will be constraints against using or endangering aquifers containing potable water. Geochemistry effects versus temperature not understood or fully explored. Not near-term available in that tests or demonstrations of significant size and useful temperatures have not been made.

#8 - Oil Storage of Feedwater Heat. The next four candidate concepts selected use sensible heat storage in media other than HTW. This selection features the main turbine/feedwater storage approach.

Extraction steam from the various accessible extraction points is used as a source, with some live steam used to trim the heat exchange to oil, i.e., raise the temperature enough so that on discharge the feedwater produced is at the desired inlet temperature. During storage discharge, the hot fluid transfers its thermal energy to heat condensate water to boiler inlet temperature; steam extraction for feedwater heat is reduced so the steam flow can produce more electricity (References 3-8 and 3-9).

Heat exchangers are required to separate hot oil and/or other sensible heat fluids from boiler quality feedwater. The heat exchanger can transfer heat from condensing steam to heat the oil directly, or an intermediate heat exchanger, i.e., added feedwater heater capacity, can produce HTW which is used in a heat exchanger to heat the oil. The latter course was used in this concept because it provides some added security against oil entering the feedwater loop but imposes added capital costs.

Advantages. Atmospheric pressure containment is a major advantage; roughly it is 35 $\$/m^3$ compared to the range from 250 to 4000 $\$/m^3$ for pressure containment. The hazards of catastrophic failure of the container are less. Pumping pressures and costs are less. Oils similar to Caloria HT-43 are near-term available; they have been used as heat transfer fluids for many years.

Disadvantages. Oil is more expensive than HTW. It takes about twice as many cubic meters of oil as water to store the same energy over the same temperature range. Heat exchangers required are added power related costs. Fouling of heat exchangers by degradation products of oil is a potential problem, so that periodic maintenance will be required. Oil is flammable and degrades slowly at high temperature; an inert gas cover must be provided for the oil. Leakage of oil can be a fire hazard and a pollution hazard.

#9 - Oil and Packed Bed/Thermocline. The concept proposed by the McDonnell Douglas/Rocketdyne team for solar thermal applications (Reference 3-10), as well as by others, reduces the quantity of oil needed by filling the storage

tank with rock and sand. Oil need only fill the voids and be the heat transfer fluid between heat exchangers and storage tanks. The tank is used in the displacement mode, i.e., hot oil floats on top of cold oil; in charging storage cold oil is withdrawn from the bottom and heated oil is returned at the top. A fairly sharp horizontal discontinuity, a thermocline, separates the hot oil and rock from the cold oil and rock. As the tank is charging the thermocline moves down; in discharging it moves up.

The heat exchanger configuration is illustrated in Figure 3-9 and discussed previously. Peaking power is obtained from separate peaking turbines.

Advantages. The thermocline tank (compared to hot and cold tanks) saves tankage. The dual media storage, rock and oil, reduces the storage cost per kWh stored, as rock is much cheaper than oil per unit of energy stored. Steam generation for use in a peaking turbine avoids the maximum peaking capacity limitation of feedwater storage. Higher pressure sources (live steam and cold reheat) can be used as sources; higher pressure steam can be generated for electric production, subject to the temperature limits on the oil. Pilot size demonstrations have been made giving some confidence in near-term availability.

Disadvantages. Some previously mentioned still apply. Heat exchanger fouling is still of concern because of reduced performance and the increased maintenance required. Flammability of oil requires precautions. Tests and demonstrations have not yet been adequate for assurance of long-term (10 to 20 years) degradation rate of the oil (requiring replacement or refurbishing), compatibility of oil with rocks of various chemical compositions, sizes, and shapes, and stresses that may be put on the tankage by the thermal cycling. This is an effect called ratcheting, hypothesized but not yet experienced, in which, when the tank expands more than the rock, the rock bed will settle but not move upwards again when the tank shrinks during the next half cycle.

#10 - Oil and Salt Storage. In this concept both hot oil and molten salt are used as storage media for different temperature ranges (Reference 3-11).

Caloria HT-43 is usable up to 315°C (600°F) which is adequate for the HTW subcooling and preheating, and for the condensing and boiling heat exchangers. A molten salt loop is used in the higher temperature range for desuperheating and superheating. HITEC (a Dupont trademark) or PARTHERM 290 (the equivalent trademark of Park Chemical Co.) is a eutectic of sodium and potassium nitrates and nitrites with a melting point of 142°C (288°F), and which is reasonably stable to temperatures over 500°C (900°F).

Advantages. The distinctive feature, the addition of HITEC storage for superheating, can potentially improve the turnaround efficiency and improve the performance and cost of the peaking turbine system. This must be traded off against the added cost of salts, tankage, and superheater heat exchanger. Molten salts, particularly HITEC (and its other trade names) are definitely near-term available. They have been used for over 20 years as a quenching bath for heat treating, and as a heat transfer fluid in many industries. The nitrates passivate carbon steel so corrosion is not a problem below 500°C, and they can be used up to 600°C with special steels. There is little or no fouling problem below 500°C and the heat transfer coefficient is much higher than that of oil.

Disadvantages. For the oil and oil/rock storage media in this concept, advantages and disadvantages are as previously described. The molten salt subsystem has its own disadvantages. While not flammable, molten nitrates are a powerful oxidizer and must not be exposed to flammable material. There is slow degradation of HITEC above 500°C that requires the maintenance of makeup, replacement, or other processing. HITEC is considerably more costly per unit of energy stored than oil (lower specific heat, higher cost per pound). One proposed way to mitigate the cost is to use HITEC and rock in a thermocline mode. While tried, there is not yet sufficient data on long-term effects of the molten salt on the rock of or rock on the molten salt to assure they are compatible. Another disadvantage of molten salts as a heat transfer fluid is the high melting point. In case of shutdown, provision must be made to trace all pipes and tanks with steam pipes or electric heaters to reestablish a flow path. American Hydrotherm has licensed a technology to facilitate shutdown and startup of a HITEC system by

adding water at an appropriate rate during the cooling period to assure that the medium stays liquid. Dupont has technical data sheets on the use of HITEC/water mixtures to give any desired melting point and a corresponding upper limit at which the vapor pressure exceeds one bar. It is claimed that none of these mixtures will corrode carbon steel.

#11 - All Molten Salt. In this selected concept only one medium is used - molten HITEC (Reference 3-11). Three storage tanks would be used with the salt temperatures 238°C, 294°C and 482°C.

The lower temperature tanks are larger and use a small temperature drop for effective heat exchange between a sensible heat medium and a condenser or boiler. A fraction of the salt from the middle tank is further heated in the desuperheater, and is later used to provide superheat.

Advantages. The basic motivation for all salt rather than two media is simplicity. The complexity of two separate storage systems is avoided, tankage requirements are reduced, some of the salt is effectively used for the full temperature range from 238°C to 482°C, and the possible hazards from having flammable material (oil) in close proximity to strong oxidizers (nitrates) are avoided.

Disadvantages. HITEC and Partherm 290 cost more than Caloria and far more than rock. One can conceive of salt and packed rock bed configurations with thermoclines, either to cover the full range from 234°C to 432°C or a large tank covering 238°C to 294°C plus a smaller tank covering 294°C to 432°C, but compatibility of rock and molten salts has not yet been adequately demonstrated. Other disadvantages previously listed for oil and for salt also apply.

#12 - Phase Change Materials (PCM). Many proponents are concerned with phase change materials with various distinctive features such as the salt or other material used, and the method of heat exchange. The beneficial effect sought from PCM is either: a high energy storage density per cubic meter, because of the large heat of fusion as well as sensible heat capacity

over the working temperature range; or a gain in thermodynamic efficiency by heat exchange to and from a boiling or condensing fluid (e.g., water) at almost constant temperature hence with high heat exchanger effectiveness and a minimum ΔT.

The latter advantage has proven difficult to achieve, not in the melting or storage-charging phase but in the freezing or storage-discharging phase. In conventional heat exchangers, the freezing material tends to build up on the heat exchange surface, so that heat exchange must include conduction through a solid layer of low thermal conductivity. In fluid to fluid heat transfer, the heat exchanger design assures adequately turbulent flow to make the film thickness limiting heat transfer very thin. A buildup of several millimeters or more of PCM reduces heat transfer by an order of magnitude, and consequently increases required area and costs.

A number of ingenious ways to minimize this problem have been proposed from additon of a mechanical scraper system to keep solid material from adhering to the heat exchanger tubes (Reference 3-12), to encapsulation of the PCM (Reference 3-13), to essentially increase the area of heat transfer by use of a direct contact heat exchanger (Reference 3-14).

This variety of PCM concepts is combined into one selection as a means of retaining flexibility to determine in the final selection process whether any of these concepts can be called near-term available, economically competitive with the other candidate concepts, or strongly indicated by improved turnaround efficiency or utility operating advantages.

It should be noted that the heat transfer between oil or salt and rock in a packed bed involves similar thermal conduction through a solid. The solution here is that very large heat transfer areas are achieved at low cost. The use of sand and gravel with a size not much over a centimeter in diameter, plus a very large cross section (5 to 15 m diameter) at the thermocline, and a very slow motion of a finite thickness thermocline, leads to a negligible ΔT between outside and inside of the individual particles.

Advantages. The thermodynamic loss of availability is reduced by latent to latent heat transfer, as compared to sensible to latent heat transfer for boiling and condensing steam. Direct contact heat exchangers combined with latent-latent heat exchangers may be less costly than the sensible heat transfer systems previously described.

Disadvantages. Because of problems of solid phase PCM either settling or freezing on heat exchange surfaces there are strong reservations that any of the concepts are near-term available. While energy storage density per unit weight or volume may be higher than competing materials for some applications, there is great doubt that any PCM could compete in energy stored per dollar, if rock beds are found to be compatible with either oils or salts.

Disposition of Other Concepts

The foregoing listing of twelve selected concepts for further analysis subsumes over twenty-five of the more than 40 listed Concept Definitions and variants in Reference 3-1, Appendix C. Some of the selections described included variations. Others can be considered as minor variations subsumed by one of the twelve, or potential growth directions when they become near-term available. Some are rejected as not being directly applicable to conventional fossil and nuclear plants. Some are rejected as not as near-term available as those chosen. A brief review of the disposition of the Concept Definitions by inclusion in Selections #1 to #12 or by rejection is given in Reference 3-1.

REFERENCE PLANTS

Selection

The context for comparison of the twelve TES concepts selected during the preliminary screening includes the baseload plants — nuclear and fossil fueled — into which they are to be integrated. Selection and description of new-capacity plants for installation in the period of interest, 1985-2000, will provide a frame of reference for comparing economic, technical, environmental, and operational advantages and disadvantages of the various TES systems.

The major additions to capacity during the period are expected to be a mix of LWR nuclear plants and coal-fired plants with flue gas desulfurization (FGD). There will also be additions of gas turbine plants, combined cycles, advanced nuclear reactors, and alternative forms of storage, but these are not considered as reference plants for TES installations.

Utility planned purchases of LWR plants are mostly in the 1000-1500 MW capacity range. Planned coal-fired plants range up to 1200 MW, but most units planned by large utilities are in the 600 to 800 MW range. Smaller utilities will have need for units in the 100 to 400 MW range.

To cover this range of sizes, three reference plants on which suitable data are available were selected. Basic data on these are given in Table 3-5. To be most useful as reference plants, not only the technical data and thermodynamic performance, but also a detailed and consistent data base using the cost elements of the standard cost accounts should be available. Recent ERDA/DOE and EPRI studies by United Engineers and Constructors, Inc., Bechtel National, Inc., and others have been used by these agencies as data base for computer codes (CONCEPT) and cost scenarios for utility planning purposes.

The first reference plant selected is an 800 MW high sulfur coal-burning (HSC) plant as documented in NUREG-0244, Volume 3, produced by United Engineers and Constructors (Reference 3-15). The second is a LWR nuclear plant as documented by NUREG-0241, Volumes 1 and 2, by the same authors (Reference 3-16). To cover the lower end of the size range, for which no similar documentation was available, a 225 MW coal plant, for which technical data was available, was selected and the costing was derived using the scaling laws built into the CONCEPT IV code.

The cycle diagrams for the 800 MW HSC plant and the 1140 MW LWR, including the heat and mass balances as determined for Task II are given in Section 4. Similar diagrams for all three plants are given in Reference 3-1, but since the 225 MW coal plant was not used in the later studies, the diagram for it is not given in this report.

Table 3-5

REFERENCE PLANT PARAMETERS

	Plant Number 1	2	3
Rated Output - MW_e	800	1140	225
Fuel Type	Hi Sulfur Coal	PWR	HSC
Steam Pressure at Turbine - MPa (psia)			
Superheater	24.2 (3512)	6.72 (975)	16.6 (2415)
Reheater	4.4 (637)	1.13 (164)	3.2 (491)
Steam Temperature at Turbine - °C (°F)			
Superheater	538 (1000)	284 (544)	538 (1000)
Reheater	538 (1000)	284 (544)	538 (1000)
Steam Flow Rate per Hour - 10^6 Kg (10^6 lbs)			
HP	2.64 (5.81)	6.23 (13.72)	0.73 (1.60)
IP	2.36 (5.19)	RH*65 (1.42)	0.65 (1.44)
Net Station Heat Rate-J thermal/J electric (Btu/kWh)			
HR	2.78 (9482)	3.0 (10224)	2.86 (9750)
Thermal efficiency-percent	36	33.4	35
Condenser Pressure-kPa	5.8/8.5	8.5	11.9
(in. HgA)	(1.7/2.5)	(2.5)	(3.5)

* The reheater flow from the LWR.

Modified Plant Designs for TES

The reference plant designs similar to those in Section 4 are quite complex, including many small flows of steam from bearing and stop-valve steam seals, and to auxiliaries such as turbine driven pumps. For computer modeling there is no disadvantage to eliminating these flows. Other simplifying changes in plant design were also made for the Task I analysis.

In making changes to the reference plants so that TES systems can be added, it is desirable that:

- Changes should not affect the rank ordering of TES concepts on economic or other criteria. The changes may alter absolute values of the criteria, or modify relative values slightly.
- Changes should be generally favorable to storage, or not unfavorable.
- Changes should improve, or not handicap the near-term availability of the plant modifications required to integrate with TES.

If the source of energy for storage is to be either live steam (24.2 MPa, 538°F) or cold reheat steam (4.9 MPa, 307°C), the steam flow to the boiler reheater tubes will be decreased while the flow through the main boiler and superheater tubes remains unchanged. Operating the boiler as designed in this mode, variable flow ratio between superheater and reheater, can cause serious problems of excess reheater tube temperature, and increased forced outages. The alternatives to avoid this seem to be:

- Redesign the boiler for variable flow ratios.
- Use hot reheat steam (output from the reheater) for storage instead of live steam or cold reheat.
- Eliminate the reheater, so that cold reheat or live steam can be used.

A telephone conversation with a leading boiler manufacturer indicated that a conventional boiler could not tolerate more than small variations in flow ratio without danger of increased reheater tube failures; however, a new boiler could be designed to accept changes in the reheater flow by some means of damper controls to change the relative flow of hot gases and redirect energy to reheater and superheater. The total boiler thermal output would be reduced during the charging of storage with live or cold reheat steam, unless the superheater, boiler, and economizer tubes were increased in the design revision.

For the second alternative the relative effectiveness of live steam, cold reheat, and hot reheat steam as a source for storage were compared. For a given swing in the initial temperature and pressure of storage to the temperature and pressure at the end of storage it was found, as expected, that the turnaround efficiency ranked highest for cold reheat, next for live steam, and lowest for hot reheat. The second alternative thus does not appear attractive.

The third alternative, eliminating the reheater tubes in the steam generator has the disadvantage of also being a major change in the steam generator design. However, it is in the direction of simplicity, reduced heat exchanger problems, higher reliability, and known technology. It is a reversion to practices before reheat cycles were common. Per unit of heat transferred, the reheater is more expensive than the superheater and boiler tubes and more sensitive to hot spots and failures if inadequately controlled and maintained. Within the groundrules of this study, the third alternative appears most satisfactory. It is achievable in the near-term, retains flexibility to study live steam or, as preferred for turnaround efficiency, cold reheat steam and provides a less costly, more reliable boiler.

Elimination of reheat will increase the required flow for the same thermal output from the boiler, and will reduce the quality (increase the wetness) of steam in various stages of the IP and LP turbine. Moisture separation is desirable and necessary to minimize turbine efficiency reduction and the danger of blade erosion. A moisture separator is added between LP and IP turbine and increased moisture separation at the extraction points for feedwater heating will occur. The absence of reheat will increase the heat rate by about 5 percent, and the increase in required "back end" steam flow of almost 20 percent for the same power will increase proportionately the cost of condenser, cooling system, and feedwater heaters. The turbine cost will roughly increase in this proportion but generator and electrical costs will not increase since the output is still 800MW$_e$. Simplification of the boiler by reheater omission should reduce its cost to partially cancel the added Turbine Island costs.

Later studies during Tasks II and III have shown that this loss in efficiency and increase in turbine cost results in a large penalty for obtaining peaking power from thermal energy storage when added to the HSC plant. Alternate configurations were briefly considered that retained the reheater but with the boiler designed so that a portion of the cold reheat flow would always be diverted for either storage or peaking turbine operation. In such a configuration the reheater and the boiler/superheater sections would have different but constant flow rates.

Such a boiler, although different from conventional designs, should be near-term and no more costly; however, it was determined that the reheat benefits generally apply only to the minimum power and that the plant would lose flexibility during various periods of operation.

The 1140 MW reference LWR does not have three turbines in tandem, so is not considered to have an IP section. Although the reference plant diverts part of the live steam to a moisture separator/reheater in order to superheat the steam to the LP turbine section, it was decided for convenience in modeling to retain the moisture separator but eliminate the reheater. This makes the configuration of base plant #2 the same as that for #1 except for the elimination of the IP turbine.

GE's Large Steam Turbine-Generator Division personnel suggested that for purposes of this study, omission of the nuclear reheat would not have a significant effect on the heat rate, and that for rapid load-following the required variation of the reheat flow could present added problems of control and reliability. Within the accuracy limits of our simplified model, the heat rate is unchanged but the mass flows through the turbine and back end components are increased by 5 to 12 percent, implying some cost increase.

Base plant #3 for the 225 MW HSC is in general similar to plant #1 except in size. It is assumed to be modified in the same way: elimination of reheat, inclusion of a moisture separator, elimination of minor flows to

seals and auxiliaries. Performance was not separately modeled as the principal difference expected is in the specific costs of the system because of its smaller size.

Task I has thus defined six plants - three reference plants for which data are available that are as consistent as can be readily obtained and the three base plants that are modified for the inclusion of thermal energy storage.

Only the large HSC plant and the LWR were later selected to be used with TES so the small HSC plant will have no further reference in the report. During Task II and III, however, the study was expanded to include cycling coal plants. The description of these added plants will be covered in Section 4.

MODELING

The discussion of the modeling will be limited to general procedures on how the work was carried out for Task I. If further details are desired they can be found in Reference 3-1. The procedures used for determining performance and costs in Tasks II and III are much more detailed and will be described in Sections 4 and 5.

Performance Assumptions

In order to provide the capability to rapidly evaluate the performance of the plants under various operation conditions, computer models of the four basic flow diagrams representing the two reference plants and the two base plants have been developed. Each model consists of an executive program which calls individual subroutines for each of the components in the system. The component subroutines were developed by GE-Energy Technology Operation and utilize the computerized steam tables from the GE-Large Steam Turbine-Generator computer library.

Because the primary emphasis in this study is to identify the most promising TES concepts, simple models are used. The goal is to include all

phenomena that would affect the relative ranking of the various TES systems, but to omit complexities that would affect all systems equally. It is important to bear in mind that the models are not intended to duplicate existing equipment, but rather to be a reasonable representation of future equipment capability.

In implementing this philosophy, numerous assumptions and approximations are made. The most important ones relating to the turbine performance are:

- Linear expansion line, i.e., enthalpy is a linear function of entropy through the expansion.
- Pressure distribution is independent of steam flow rate, therefore enthalpy at extraction ports is constant even when large quantities of steam are diverted to charge the TES system.
- Separate moisture removal at the extraction ports is not modeled.
- Turbine efficiency is constant independent of moisture content and steam flow rate and is 85 percent for the HSC plant turbines and 80 percent for the LWR turbines.
- For the main unit LP turbines the enthalpy of the output steam is increased by a leaving-loss correction to approximate the effect of steam flow rate on heat rate or cycle efficiency. The leaving-loss correction is then modified by an empirical relationship to account for the moisture content.
- The moisture separators are assumed to remove all of the moisture and put out saturated steam. For the HSC base plant the separator input steam contains only 4 percent moisture so that separator could probably be eliminated with negligible effect.
- The condenser pressures are assumed constant, independent of steam flow. This implies a variable coolant flow rate as the heat rejection requirements vary. However, auxiliary power requirements for the cooling system are neglected.
- Pressure drops in the system are assumed to occur at discrete locations - at moisture separators, deaerators, and at the steam supply system.
- The feedwater pumps are assumed to be 65 percent efficient and all other pumps 60 percent. The generator efficiencies are taken as 98.7 percent.

With the HSC plant with TES (Plant No. 1), the sensible heat, steam-generating TES systems divert intermediate pressure (IP) steam from the input of the IP turbine, condense and cool it, and pump the condensate back to the inlet of the high pressure feedwater heater. The HP turbine and its associated feedwater heater are thus unaffected by the charging operation. The maximum charge rate is determined by the minimum allowable flow through the IP and LP turbines. For this analysis it is assumed that the minimum flow to the condenser is about 20 percent of the normal design flow.

To charge the sensible-heat steam-generating TES systems of the LWR (Plant No. 2), live steam is diverted from the nuclear steam supply (NSS) outlet, condensed and cooled, then pumped to the NSS inlet.

There are numerous performance indices that can be used to describe the various systems. For convenience in later work (and hopefully, also for clarity) the "turnaround efficiency" and "specific output" are chosen as the primary measures of performance. Turnaround efficiency is simply the ratio of the peaking electrical energy generated during the discharge cycle to the reduction of electrical energy during the charge cycle. For these analyses, where constant power generation is assumed during each cycle, this becomes simply:

$$\eta = \frac{(P_d - P_n)t_d}{(P_n - P_c)t_c} \qquad (3\text{-}1)$$

where

P_d = power generation during discharge cycle, MW

P_c = power generation during charge cycle, MW

P_n = power generation in normal operation (TES system inactive), MW

t_d = discharge time, hr

t_c = charge time, hr

Specific output is the ratio of the total electrical energy generated during the discharge cycle to the total volume of storage required to produce it, or

$$e_o = \frac{(P_d - P_n)t_d}{V_s}, \text{ MWh/m}^3, \tag{3-2}$$

where

V_s is the storage volume in m^3.

<u>High Temperature Water for Steam Generation</u>. The proposed HTW system concepts all store water under adequate pressure to prevent vaporization. They differ only in the design of the containment vessel and the method of operating it. The design of the containment vessel essentially influences only the thermal losses during storage and the auxiliary power requirements. Since all methods of containment can be designed to lose less than one percent of the energy stored, thermal losses are neglected in the modeling. The auxiliary power requirements may differ somewhat depending on whether the vessel is located underground or on the surface. The density of the steam is so small (about 1 lb/ft^3 or 16 kg/m^3) that this difference can be safely ignored for systems that transport steam in and out of underground storage vessels. For systems that transport water the auxiliary power may be significant. However, it is neglected here on the assumption that any power used in removing water from storage can be recovered from the water injected into the storage, with the exception of pumping losses.

The major difference among the candidate TES systems is the method of operating the accumulator. For steam generating systems all three accumulator modes (i.e., variable pressure, expansion, and displacement) are appropriate. For feedwater storage systems, no steam is wanted, and the temperature and pressure of the HTW discharged should remain constant unless some steam extraction is used for trimming between storage and the boiler

inlet. The displacement mode would seem most appropriate if the means of containment is suitable for this mode. The expansion mode would require a large supplementary storage for cold feedwater.

There are numerous design parameters that affect the performance and cost of a combined power plant with a TES system attached. The 800 MW base coal Plant No. 1 with a Variable Pressure Accumulator storage system is selected for sensitivity analyses of the major design parameters.

A schematic diagram of a variable pressure accumulator was shown in Figure 3-6 and its operation discussed earlier. In order for the accumulator to return to the same conditions after each cycle, the mass and total enthalpy added during charging must equal the mass and total enthalpy removed during discharging. When charging with superheated steam from the coal plant it is necessary to mix in a small amount of feedwater to obtain the balance. Charging with saturated steam from the nuclear plant requires removing a small amount of the stored water. The throttle in the input line is simply to control the rate of charge. The throttle in the output line is necessary to control the rate of steam generation and to provide steam to the turbine at a constant pressure.

Since the variable pressure accumulator is a non-equilibrium thermodynamic process, it is modeled by assuming equilibrium processes are valid for small changes in the storage pressure and temperature. Thus the accumulator performance during discharge is evaluated by an iterative computational procedure.

During recharge the input steam is assumed to have a constant specific enthalpy, so the model is much simpler. The differences in mass and total enthalpy between the charged and discharged states are calculated, thereby determining the specific enthalpy required in the input steam. The enthalpy of the charging steam from Plant #1 exceeds the requirements, so the amount of feedwater to be mixed with the charging steam is calculated. The saturated steam from the LWR Plant #2 does not meet the required specific enthalpy,

so some HTW must be removed from the accumulator. For convenience, the HTW is removed continuously during the charging and returned to the inlet of the nuclear steam supply.

Figure 3-7, shown earlier, is a schematic representation of an expansion accumulator with the output HTW used in flash evaporators. When fully charged there is a small steam cushion on top of a large volume of HTW, as in the variable pressure accumulator. During discharge, HTW is withdrawn from the bottom of the storage vessel, lowering the internal pressure. The steam cushion expands and some of the remaining HTW flashes to steam to restore equilibrium. The temperature and pressure in the vessel decrease steadily throughout the discharge cycle but not as much as in a variable pressure accumulator. In this mode of operation nearly all of the stored HTW can be withdrawn for external steam generation. The HTW removed from the accumulator is throttled to a lower pressure in a flash evaporator. The output steam is then used in a peaking turbine. The evaporator drain water can be pumped into the main turbine feedwater loop, stored, or throttled to a still lower pressure in another flash evaporator. Any number of evaporators may be used, but this requires multiple peaking turbines or a multiple inlet turbine.

To recharge the accumulator a mixture of steam and feedwater is admitted to the storage vessel, gradually raising the water level, pressure and temperature until the initial charged condition is reached. Because of the latent heat of steam the mass flow of feedwater greatly exceeds that of steam in the charge mixture.

In many respects the thermodynamic processes in the expansion accumulator are similar to those in the variable pressure accumulator. Thus the modeling approach is similar. The performance during discharge is evaluated using an iterative procedure. The final pressure, with all the HTW removed from storage, is about 70 percent of the initial storage pressure. A large fraction of the HTW can be removed with very little pressure and temperature

drop. For recharging, the mix of feedwater and steam required is calculated by a mass and enthalpy balance between the charged and discharged conditions assuming that the mix remains uniform during the entire charging process.

Early in the study consideration was given to using a combination of steam generation and feedwater supply with the expansion accumulator (selected Concept No. 1). The drain from the final flash evaporator is pumped into the feedwater loop at a point where the temperatures match. This scheme requires a sizeable surge/storage tank to accommodate the cold feedwater replaced by the drain water from the evaporators. The peaking swing is also severely limited because the discharge rate of the accumulator is restricted by the boiler feedwater flow. In fact, the maximum swing is not much greater than for a pure feedwater storage system. For this reason the concept was dropped from further consideration and all analyses assume that the evaporator drain water is stored in a supplementary storage vessel at an intermediate pressure.

Figure 3-8, also shown earlier, shows a schematic representation of a displacement accumulator with the output HTW used in flash evaporators. When fully charged the storage vessel is full of HTW at slightly above saturation pressure. During discharge HTW is withdrawn from the top of the vessel and throttled to one or more flash evaporators. The drain from the final evaporator is pumped to the bottom of the vessel, creating a sharp temperature gradient (thermocline) between the HTW and the drain water. If care is taken to avoid mixing, the thermocline can be maintained reasonably sharp. Because some steam has been produced and the drain water has a lower specific volume than the HTW removed, water at the drain temperature is required from a supplementary storage tank to keep the accumulator full. Note that the temperature and pressure of the output HTW are constant throughout the discharge until the thermocline reaches the top of the tank.

To recharge the accumulator, cold water is circulated from the bottom of the tank, mixed with charging steam and returned to the top of the tank, pushing the thermocline down. Because of the steam added and the increased

specific volume, excess cold water must be removed and returned to the supplementary storage. In general the mass of water returned to storage during charging is not equal to that removed during discharge.

Modeling the accumulator is relatively straightforward since only equilibrium thermodynamic processes are involved so no detailed description is given. All that is required is to maintain a mass, volume, and enthalpy balance. The thermocline is assumed to be perfect; thermal losses and pressure drops are neglected.

Feedwater Storage. With HTW feedwater storage systems excess feedwater is drawn from a cold storage reservoir during the charge cycle, heated in standard feedwater heaters by extraction steam, and stored in a pressure vessel just above the saturation pressure. When extra electrical output is required, the stored HTW is pumped to the boiler inlet, replacing a part of the normal feedwater. This reduces the extraction steam flow, allowing more steam to flow through the entire turbine and producing extra power. No large steam turbine is currently capable of operating with all (or most) of the extraction steam shut off. The maximum peaking swing is estimated by various authors and proponents at 6 to 35 percent. Some assume quite low boiler inlet temperatures (Selection #5), others assume very high boiler inlet temperatures (Selection #8) in part accounting for the variance. Conventional near-term available plants are most likely to be limited to under 20 percent.

Either a displacement accumulator or a two-tank system are suitable for feedwater storage. Since boiler quality feedwater should not be exposed even to inert gases, the "cold" tank of a two-tank system should be near 100°C with a steam cushion. Except for the thermal stresses developed in the displacement accumulator there is essentially no other difference between the two, so a two-tank system is modeled here. In order to handle the extra steam flow during peaking operation, the exhaust area of the main

turbines in both the coal plant and the nuclear plant are increased by 25 percent, giving a slightly increased output at the design flow rates.

Low Pressure Sensible Storage. The "one-bar" or atmospheric pressure thermal energy storage systems are characterized by the use of low vapor pressure (LVP) fluids as a heat storage medium, as a heat transfer fluid to a solid phase for heat storage, or in both roles. The primary requirements on the fluid are its low vapor pressure at the temperatures of interest, which permits containment in conventional atmospheric pressure steel tanks, large heat capacity, sufficiently low viscosity, and stability under repeated heating/cooling cycles.

A number of sensible heat storage concepts employing low vapor pressure fluids were described previously, which differed in the configuration and mode of operation of the storage system itself. With the same interface and mode of use of stored thermal energy, the storage system can be configured as multiples of variously sized liquid-filled tanks, or of packed-bed thermocline tanks operated such that the void volume is kept filled with fluid, or is drained once the unit has been charged to its upper temperature. In modeling these systems, it is found that the nature of the interface with the power plant (i.e., the design of the heat exchangers) and the physical properties of the heat transfer fluid dominate the power-related aspect of the TES system and that these factors are significantly decoupled from the configuration and mode of operation of the heat storage units which dominate the energy-related aspect of the system.

The two ways of utilizing the stored energy in these sensible heat systems are the same as those investigated for the high temperature water (HTW) systems: steam generation, employing the stored heat to generate steam for admission to a separate peaking turbine when demand rises; and feedwater heating, allowing the main turbine to operate with reduced extraction thereby generating additional power during peak demand periods. The one-bar, sensible heat systems differ from the HTW systems in that provision must be made to keep the heated medium physically separate from the working fluid by the use of appropriately designed heat exchangers.

Steam Generation Systems. Thermal energy stored as sensible heat in a fluid plus solid medium during the off-peak or charge phase of a load cycle can be used to generate steam for admission to a separate peaking turbine-generator to provide increased power during the on-peak or discharge phase. The virtually complete decoupling of the main and peaking turbines results in flexibility of equipment design and operation for the charge and discharge phases. An essential part of the analysis of these concepts is to investigate their performance and cost as a function of certain primary design parameters.

The qualitative temperature relationships among the charge steam, the storage medium, and the generated steam were displayed in Figure 3-10. The highest temperature profile represents the charge steam; in general, the major part of its total enthalpy decrease occurs as the latent heat of condensation is transferred to the storage medium at saturation temperature.

The intermediate sloping line represents the heat transfer fluid to the storage system, which may also be the storage medium. As long as the temperature dependence of the heat capacity of the storage medium is small, its temperature profile can be represented by a line of essentially constant slope, indicating that all the energy transferred to it is in the form of sensible heat, i.e., no phase change occurs. A useful choice of the two parameters required to specify the position of this line is the temperature difference between it and the hot end of the condenser, and its slope. The temperature difference specifies the fluid temperature approach or "pinch point," and is a result of the effectiveness of the heat exchangers. The slope specifies the temperature swing of the storage medium and depends on the mass flow ratio between the heat transfer fluid and the charge steam; a large ratio corresponds to a smaller slope and a smaller fluid temperature swing than in the case with a small ratio.

Once the configuration of this kind of system is known (charge steam properties, choice of storage medium, etc.), the key parameters which define the thermodynamic performance of the system are the values of the

temperature approach at all heat exchanger pinch points and the ratio of the quantities of heat storage fluid and charge steam involved. Once these parameters are specified, the properties and flow rate of the generated steam can be determined.

Overall heat transfer coefficients, U, were estimated by standard methods from inside and outside film coefficients, assumed fouling resistances, and steel tube-wall conduction assuming nominal 2.5 cm (1 in.) outside diameter tubes of 0.4 cm (0.15 in.) wall thickness. Film coefficients were calculated using Colburn (j-factor) correlations for forced convection under conditions of fully turbulent flow. In general, standard tabulated values were used for film coefficients of water or steam as tube-side material, and film coefficients were calculated for the various heat transfer fluids or shell-side material flowing normal to staggered tube banks.

For the base case, the energy storage calculation assumes the use of rock and gravel packed-bed thermocline tanks with a bed volume fraction of 0.75, operated in the filled mode so that the fluid volume fraction is 0.25. Cost sensitivity excursions about the base case were made by varying the bed volume fraction from zero, i.e., an all-fluid storage medium with no packed-bed, to unity, i.e., an "all-bed" or drained-tank storage medium.

Feedwater Heating Systems. Only Selected Concept No. 8 utilizies the combination of sensible heat storage with oil and feedwater heating. Of the various configurations identified as concepts, the one chosen for modeling is thermodynamically simplest and involves the smallest number of special components (heat exchangers), but would have a number of practical drawbacks if actually implemented. As modeled, however, it should be the least expensive version of this type, and so should compete most favorably among alternative systems. The application described here is evaluated for Plant #2, the 1140 MW LWR.

The system employs Caloria HT-43 oil as a heat transfer medium and rock and gravel packed-bed thermocline tanks kept filled with oil as the heat storage medium. As shown in Figure 3-11, cold oil is drawn from the bottom of the tanks at temperatures below 93°C (200°F) during the charge (off-peak) phase of the cycle, and is passed through a separate circuit in the feedwater heaters or separate train of heaters of similar design in parallel with the normal feedwater return flow, where it is heated by the increased flow of extraction steam caused by its presence. The oil circuit enters the feedwater heater chain above the lowest pressure heater (which is physically located in the condenser), where the feedwater is at about 80°C (177°F), passes through five heaters in series, and leaves the highest pressure one at 227°C (440°F), the same temperature as the feedwater being returned to the nuclear steam supply system. To increase the oil temperature above this point, it is passed through a "trim heater" fed from the main steam line at 283°C (541°F) where its temperature is raised to 238°C (460°F) to provide for the 11°C (20°F) temperature approach assumed for the discharge heat exchanger.

From the trim heater, the hot oil is directed to the top of a discharged thermocline tank where it transfers its heat to the rock bed as it flows downward, leaving as cold oil to repeat the circuit.

During the discharge (on-peak) phase of the cycle, the turbine's output power is increased by diverting a fraction of the return feedwater flow from its normal path through the extraction heaters to the TES system discharge heat exchangers, where it is heated to boiler entry temperature in countercurrent flow against the hot oil drawn from the top of charged thermocline tanks. A separate feedwater pump in the diverted flow line raises the pressure to its boiler entry value of 8.3 MPa (1200 psi).

The heat exchanger characteristics required for this feedwater heating system can be derived from the hot and cold steam temperatures and flow rates indicated by the thermodynamic model of the system. From these data, the heat exchanger effectiveness, number of thermal units rating and overall heat exchange area can be determined.

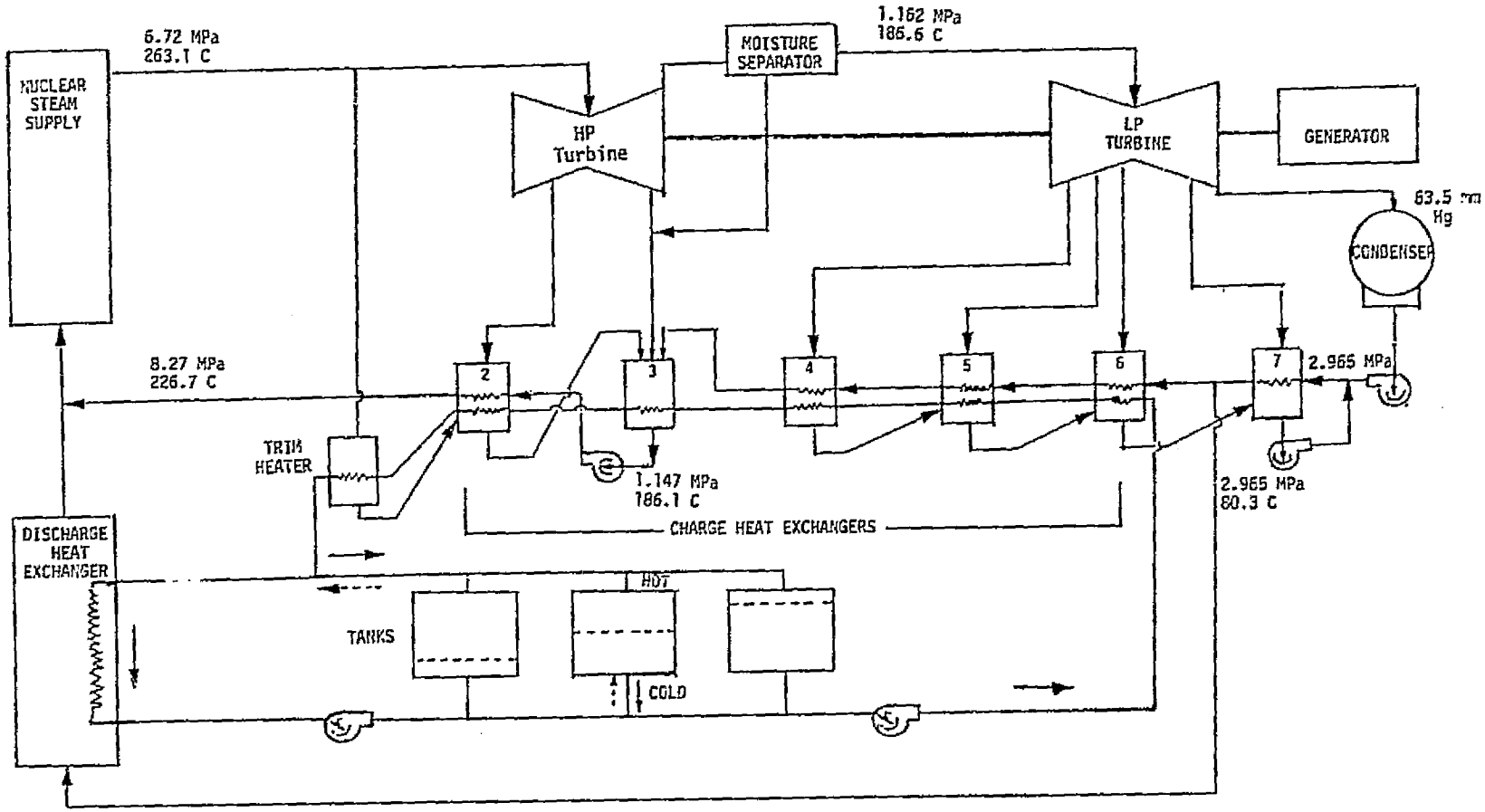

Figure 3-11. Feedwater Heating TES System for Plant #2

Economic Assumptions

A number of assumptions must be made, and terms and methodology defined, for understandable and consistent economic analysis of different plants and different storage system concepts in different future years. The Electric Power Research Institute (EPRI) has issued a Technical Assessment Guide (TAG) (Reference 3-17) as an aid to comparative evaluations. Its intent is to supply a consistent set of assumptions, organized in an economic methodology familiar to and accepted by electric utilities, so that studies made by different groups and contractors can be more easily compared. To the greatest extent possible the methodology and the recommended numerical parameters in this guide (TAG) are used, based on data in an earlier version of August 1977.

Some key assumptions.

- All dollar values are given in mid-1976 dollars. Future costs are expressed in 1976 dollars.
- All capital costs are assumed to escalate at a constant general inflation rate of 6 percent/annum. Compatible with this is a fixed charge rate (FCR) of 18 percent to convert capital costs into uniform annual fixed charges over a 30-year life of plant. For other equipment lifetimes an adjustment in FCR must be made.
- Fuel costs are expressed in 1976 dollars but are assumed to escalate faster than general inflation at net rates given in TAG. The fuel costs over a time period, reduced to 1976 dollars, will be higher for later dates of initial plant operation. For simplicity in this analysis, 1990 is assumed as the initial operation date for all analyses.
- Single unit plants are assumed. The TAG prefers to give specific costs (dollars per kilowatt - $/kW) for twin units at one site, but gives relationships to find the cost of the first unit and the cost variation with plant capacity.
- As there are regional differences in costs, plants located in the East Central region are assumed, as suggested in the TAG, as roughly average for the nation.

Cost Components of Reference Plants. Table 3-6 compares the costs of the three reference plants and illustrates the various components of the cost

and levels of cost. All figures are in millions of dollars (M$) except the $/kW summary at the bottom.

The several sources use cost accounts to indicate at a two-digit level the major cost elements or subsystems, and at a level of three or more digits the elements of the subsystems down to individual parts (e.g., pumps, motors, tanks) and construction materials (e.g., pipes, concrete, reinforcing steel). At the two-digit level, Table 3-6 presents the account numbers, the account title, and the "direct cost."

Table 3-6

COST ACCOUNTS OF REFERENCE PLANTS

#1 — HSC Coal 800 MW per UE (NUREG 0244 V3) and EPRI (TAG)
#2 — LWR 1140 MW per UE (NUREG 0241) and EPRI (TAG)
#3 — HSC 225 MW

Grouped Cost Accounts	#1 - 800 MW	#2 - 1140 MW	#3 - 225 MW
	Millions of Dollars		
20 Land	2.0	2.0	1.4
21 Structures	38.0	101.4	14.6
25 Misc. Plant	8.7	11.8	5.6
22 Steam Gen. Plant	120.1	133.4	38.3
23 Turbine Plant	65.2	111.3	20.8
24 Electric Plant	28.9	39.4	15.3
26 Heat Rej. System	12.0	21.6	4.9
A Total Direct	275.0	421.0	100.9
	x 1.22 =	x 1.35 =	x 1.3 =
B Base Cost	335.2	568.8	131.0
	x 1.77 =	x 1.57 =	x 1.5 =
C TOTAL Investment Cost	594	894	197
Direct to TOTAL	x 2.16	x 2.12	x 1.95
$/kW			
Direct Cost	343	370	448
Base Cost	419	500	583
TOTAL Investment Cost	743	785	874

It is important to note and understand some of the terminology used in the cost accounting system. There are many echelons of costs, and serious errors in comparing concepts or systems can be made by not assuring that the costs of each are at the same echelon, with the same assumptions.

For example, Plant #2 has at the lowest subaccount echelons the costs of factory equipment, the onsite labor costs, and the onsite material costs. The sum of these three is the direct cost, also often called the installed cost. Some illustrative examples of the echelons of cost accounts from Reference 3-16 are shown in Table 3-7.

Table 3-7

ILLUSTRATIVE COST BREAKDOWN OF COST ACCOUNTS
(millions of dollars - 1976$)

Account Number		Factory	Labor	Materials	Direct Cost
231.11	Turbine Factory Cost	53.22	--	--	53.22
231.1	Turbine & Accessories	53.22	2.57	0.24	56.03
231.2	Foundations	--	1.34	0.83	2.17
231.	Turbine Generator	54.87	5.19	1.29	61.36
23.	Turbine Plant Equip.	82.63	23.34	5.32	111.28
2.	Total Direct Costs	221.10	133.14	66.72	420.96
9.	Indirect Costs	95.92	19.45	32.50	147.87
Total Base Costs		317.02	152.59	99.22	568.83

It can be seen that some 4-digit accounts are all factory equipment cost, some are all onsite costs. The sum of all turbine and accessory accounts give a 3-digit Turbine Generator Account. To this must be added the condenser, feedwater heating equipment, and other parts of the Account

23 Turbine Plant Equipment. Adding the reactor equipment, electrical accounts, land and construction accounts, and miscellaneous gives the Account 2 Total Direct Costs. Yet to be added are the indirect costs such as home office and onsite overhead costs. Including these gives the echelon called Total Base Costs.

Sometimes a multiplier is used on factory equipment costs to give a rough estimate of direct or installed costs.

Not included in the base cost are a number of cost elements that must be included to form a proper estimate of the investment required by a utility to make a plant operational. Reference 3-16 indicates some of these as:

- Owner's costs for consultants, site selection, etc.
- Fees, permits, State and local taxes
- Spare parts
- Interest during construction (or AFDC - allowance for funds during construction)
- Contingency allowance

The EPRI Technical Assessment Guide, in order to provide a complete cost estimate acceptable to utilities, and to be useful in comparing the plants they describe and other energy options being studied, include the above cost elements, but exclude certain components such as switchyards, which are common to all plants. Thus three cost levels are sometimes used: direct cost, base costs, and TOTAL investment costs. From the TAG total cost in $/kW times the capacity in kW, the TOTAL investment cost in millions of dollars is found, which includes the above cost elements. To couple these TOTAL investment cost estimates from EPRI to the detailed data base on the direct cost of plant subaccounts, a multiplier on the total direct cost is derived. It can be seen from Table 3-6 that for the three

plants this multiplier does not vary widely; it is 2.16, 2.12, and 1.95, or may be conveniently called 2.1. Our main interest is in converting direct costs to TOTAL investment costs.

Reference sources that do not clearly state their assumptions on the type of costs that are given and the basis of dollars used (e.g., 1976$) are difficult to compare, and can be misleading by factors of two or more. While direct costs will be used in this report in combining and comparing costs at the component and subaccount level, the analysis of investment costs and annual costs must include all the adders required to give TOTAL investment costs.

Cost of Electricity. The cost of electricity (COE) in $/MWh (or mills/kWh) is obtained by dividing the total annual cost by the number of MWh produced annually. The annual capital charge is the TOTAL investment cost multiplied by the fixed charge rate. To this is added the annual fixed operation and maintenance cost, in $/kW·a, and levelized as described in the EPRI TAG. The sum is the annual fixed cost in millions of dollars. For future use on other capital costs (e.g., storage), fixed O&M can be expressed as a multiplier to the fixed charge rate.

The other major cost components are the variable costs, principally the cost of fuel. The amount of fuel used is related to the annual output of electric energy by the heat rate (or the thermal efficiency). The TAG gives price scenarios for nuclear fuel and coal over the time period 1975 to 2000.

Converting this escalating stream of annual fuel costs into an equivalent uniform or levelized stream of payments requires finding a fuel cost intermediate between the extremes that has the same present worth as the escalating stream. These levelizing factors are given in the EPRI TAG.

The capability of each plant to produce electric energy is limited by periods of reduced output or zero output caused by scheduled maintenance or forced outages. The fraction of the maximum theoretical output that can be obtained is called the availability. Again, TAG provides recommended values based on current experience, e.g., 0.723 for both the 800 and 1140 MW plants. Currently, plants over 600 MW_e have significantly lower availability than small plants, in part because of immaturity of the technology.

Combining these factors with the thermal efficiency leads to the annual fuel costs to produce maximum output as limited by the availability. Variable O&M costs are given in TAG in $/MWh in 1976$. Escalating to 1990 in 1976$ by the net escalation rate for fuel and applying the same levelizing factors used for fuel gives the annual variable O&M costs. These plus annual fuel costs give annual variable costs.

Combining fixed and variable costs gives total annual costs. Dividing by the number of MWh produced annually gives the specific cost of electricity (COE) in $/MWh (the same as mills per kWh).

High Temperature Water Containment. Five forms of high pressure containment have been considered for storing HTW:

- Prestressed Cast Iron Vessels (PCIV)
- Prestressed Concrete Pressure Vessels (PCPV)
- Steel Pressure Vessels (Steel)
- Underground Cavity Containment (UG Cavity)
- Confined Aquifer Storage (Aquifer)

The cost of containment of HTW in these vessels is a function of the design pressure, temperature, and the volume. Pressure and temperature effects are closely correlated for saturated HTW so will be treated together. The cost versus volume relationship is not necessarily linear for a single pressure vessel, but when the volume required is many times the largest unit size believed to be practicable a linear relationship can be assumed.

Following are the sources for costs on these forms of containment for high temperature water. The costs and a comparison of the costs for the various containment types will be presented later.

PCIV. Professor Paul V. Gilli (Reference 3-2), in a 1977 study performed for ERDA/STOR, makes estimates on PCIV costs for a range of volumes and pressures. His cost items approximate the direct cost level. Appropriate factors were used to convert these costs to TOTAL investment costs for consistency with the other costs when considering annual costs. In Reference 3-2 transportation costs are specifically excluded, some items are included for erection and foundation, a small amount is included for engineering and testing.

PCPV. No proponent has specifically studied the use of prestressed concrete pressure vessels for containing HTW in the 3-10 MPa range. Cost data from several sources on PCPV versus pressure were located and compared as shown in Figure 3-12.

Ian Glendenning of the British Central Electricity Generating Board (CEGB) used a rock-bed in PCPV for thermal storage (References 3-18 and 3-19) in a study on compressed air storage systems.

It was found that the Ralph M. Parsons, Inc. were performing a study for the Department of Energy (Fossil Fuels) on the cost of PCPV containment of several coal gasifier process modules. The assistance of Messrs. James O'Hara and Richard Howell of that project was solicited to separate the cost of containment and liner from the process machinery internal and external to the pressure vessel in their process studies.

The cost figures derived by R.M. Parsons were base costs, in December 1977 dollars. To reduce these base costs in 1977 year-end dollars to direct costs in mid-1976 dollars a factor of 1.4 was used.

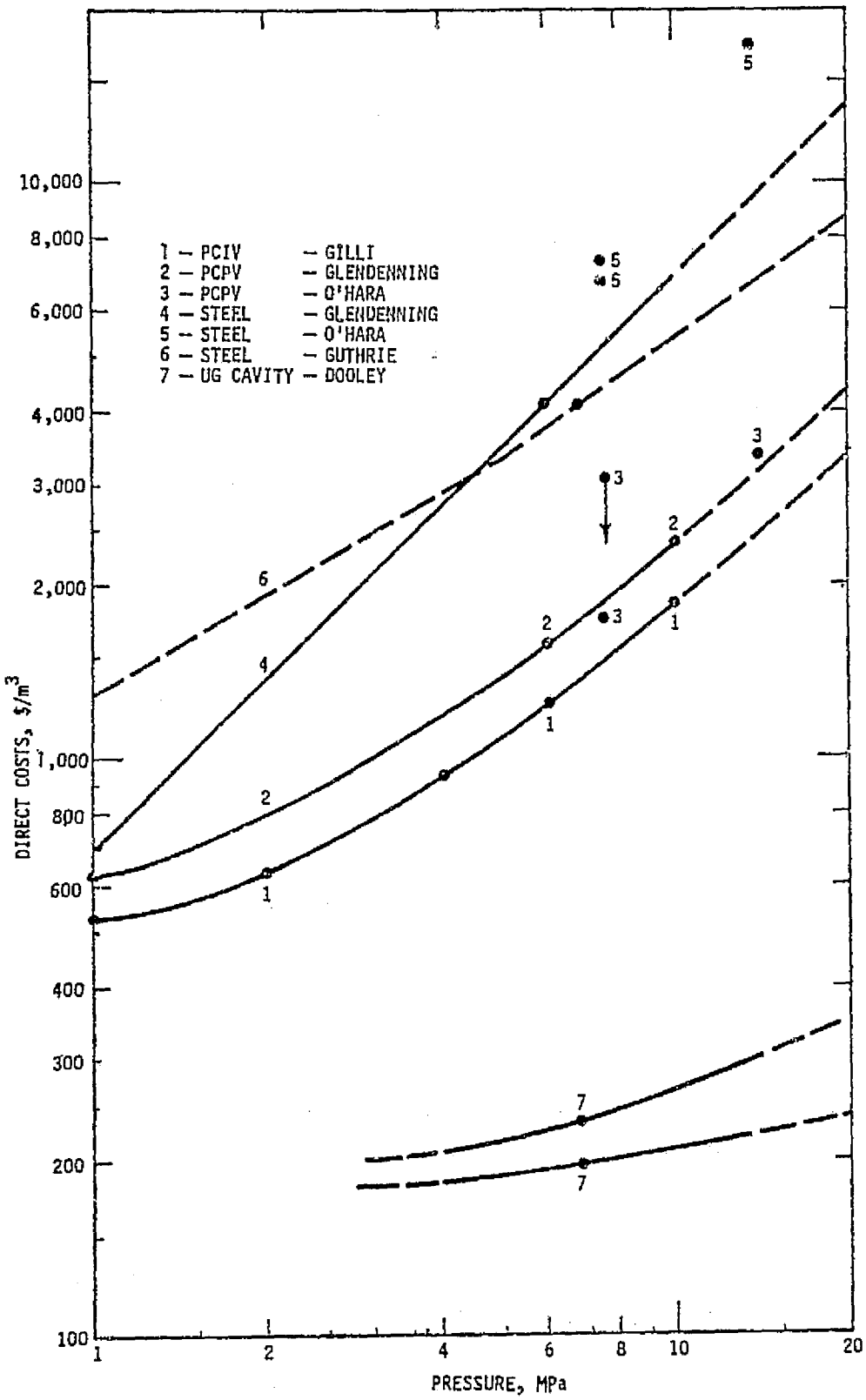

Figure 3-12. Comparison of the Direct Costs of Pressure Vessels for HTW Containment

Steel. Pressurized vessels of welded steel conforming to ASME Boiler and Pressure Vessel Codes are necessarily limited in volume if wall thicknesses are not to be excessive. Both Glendenning of the CEGB and O'Hara of R.M. Parsons, Inc. derived costs for both the PCPV and steel vessels of comparable volume and pressure/temperature rating.

Underground cavities. Two proponents emphasized underground cavity containment of HTW: James Dooley of R&D Associates (Reference 3-4) and Allen Barnstaple of Ontario Hydro (References 3-5 and 3-6). Their estimates for the cost of excavating underground cavities and preparing them for use as storage were reasonably comparable.

Shaft costs are considered to be related to the power (pipe size, etc.) and to pressure (depth or pipe length, etc.). The depth and pressure proportional components are principally shaft excavation and muck disposal, shaft preparation and lining, and steam piping.

Aquifers. Since aquifer storage requires no excavation of cavities, construction of liners or other volume-dependent expenditures, it comes close to having zero energy-related costs. It relies upon natural formations confined at top and bottom to isolate it from other aquifers. These may extend for thousands of meters with heights of 10 to 100 meters, so extremely large quantities of energy can be stored for long times making seasonal storage feasible (Reference 3-20).

The only costs that can be considered energy-related are the operating costs, including thermal losses in the aquifer and pumping energy costs, and maintenance costs such as heat exchanger cleaning, well treatment to reduce plugging, etc. There are, however, power-related costs for aquifer storage and these are discussed by Charles Meyer (Reference 3-7).

Low Pressure Sensible Storage Containment. Relationships were developed for the three main components of sensible heat storage systems: the heat exchangers, the tanks, and the heat storage media. Two costing approaches were used for the heat exchangers: the method given by Guthrie (Reference 3-21) and a simplified expression derived from feedwater heater cost data contained in the NUREG-0241/2/3/4 reports (References 3-15, 3-16, 3-22, and 3-23). Guthrie's method estimates a base cost as a function of heat transfer area and modifies this by factors reflecting design type, tube pressure shell/tube materials, cost escalation, and installation labor and material factors to obtain direct costs.

Comparison of the two cost formulations for the types and sizes of heat exchangers required indicates that they are in good agreement for design pressures below about 5 MPa (700 psia), but that the pressure dependence of the simple formula is too extreme above this value. Consequently, the simple formula is used at the lower pressures and the Guthrie approach at the higher. In the analysis, individual heat exchangers were limited in size to a maximum surface area of 2800 m^2 (30,000 ft^2) per unit. This is achievable in a counterflow, tube and shell unit of 1.8 m (6 ft) o.d. and 14.6 m (48 ft) length using 0.025 m (1 in.) tubes with a triangular pitch of 1.25 times the tube diameter. The cost of multiple units, when needed, is taken as the same multiple of the unit cost.

The cost of storage tanks is based on the estimating relationships given by Guthrie (Reference 3-21) for large, field erected, welded storage tanks with conical roofs to API specifications. Assuming a nominal size tank as 40 m (131.2 ft) in diameter and 10 m (32.8 ft) high with a capacity of 12,190 m^3 (430,000 ft^3), an estimate of the cost of insulation was made and incorporated as a constant factor for tanks of all sizes. The direct cost of the nominal size tank was found to be $295,700 in 1976 dollars; when required, multiple tanks are costed as multiples of the unit cost.

For the storage media the assumed cost of rock as river bed gravel is 16.5 $/Mg (15 $/ton) and the assumed 1976 cost of Caloria HT-43 is 246 $/Mg (233 $/ton, 80 ¢/gal).

Peaking Turbines. Costs for the peaking turbine and all associated power related equipment must be derived that are consistent with the cost data for the reference plants and for the other TES costs. The peaking turbine capacity is the largest power related component of TES cost.

For HTW storage concepts in which part of the water is flashed to steam during storage discharge, saturated steam at about constant pressure and temperature is delivered to the peaking turbine. A throttle between storage and the turbine assures the constant pressure for constant turbine output. This constant, throttled pressure must be lower than the HTW storage pressure. The lower the pressure the larger the fraction of the HTW that can be flashed to steam, and the higher the storage density in kWh/meter^3. But the lower the saturated steam pressure, the greater the steam mass flow rate required per kilowatt of electric output from the turbine generator. The cost in $/kW of a number of the cost elements of the Turbine Island are almost directly proportional to the mass flow. As the turbine inlet pressure decreases, the specific cost of the peaking Turbine Island will increase.

There is a similar decrease in the turbine inlet pressure from charge steam used for storage in a sensible heat storage system, e.g., oil/rock, and the discharge steam deliverable from the storage output heat exchangers. In this case, however, TES design may provide some superheat in the reduced pressure steam delivered to the turbine.

Only a rough estimate of the variation of peaking Turbine Island specific cost can be derived, as detailed turbine plant redesign and costing for each input steam condition is not feasible for this screenirg.

Computer calculations of steam flow through the peaking turbine can give a better estimate of the power output per kg/hr of steam or its inverse the kg of steam per kWh output. This is a function of the steam input conditions expressed as pressure and specific enthalpy (kJ/kg), or its equivalent using temperature, degrees of superheat, or steam

quality as a parameter. Figure 3-13 is derived from such runs for the peaking turbine for base Plant #1. The output scale is given both as the enthalpy flow through the condenser and heat rejection system per kWh of peaking output and as the equivalent estimated TOTAL investment cost of the incremental power capacity in $/kW. The dashed line minimum indicates a constant $/kW, and the maximum indicates the extreme if the turbine cost were exactly proportional to the enthalpy flow. Both saturated and one example of superheated steam input are given to show the effect of superheat on cost.

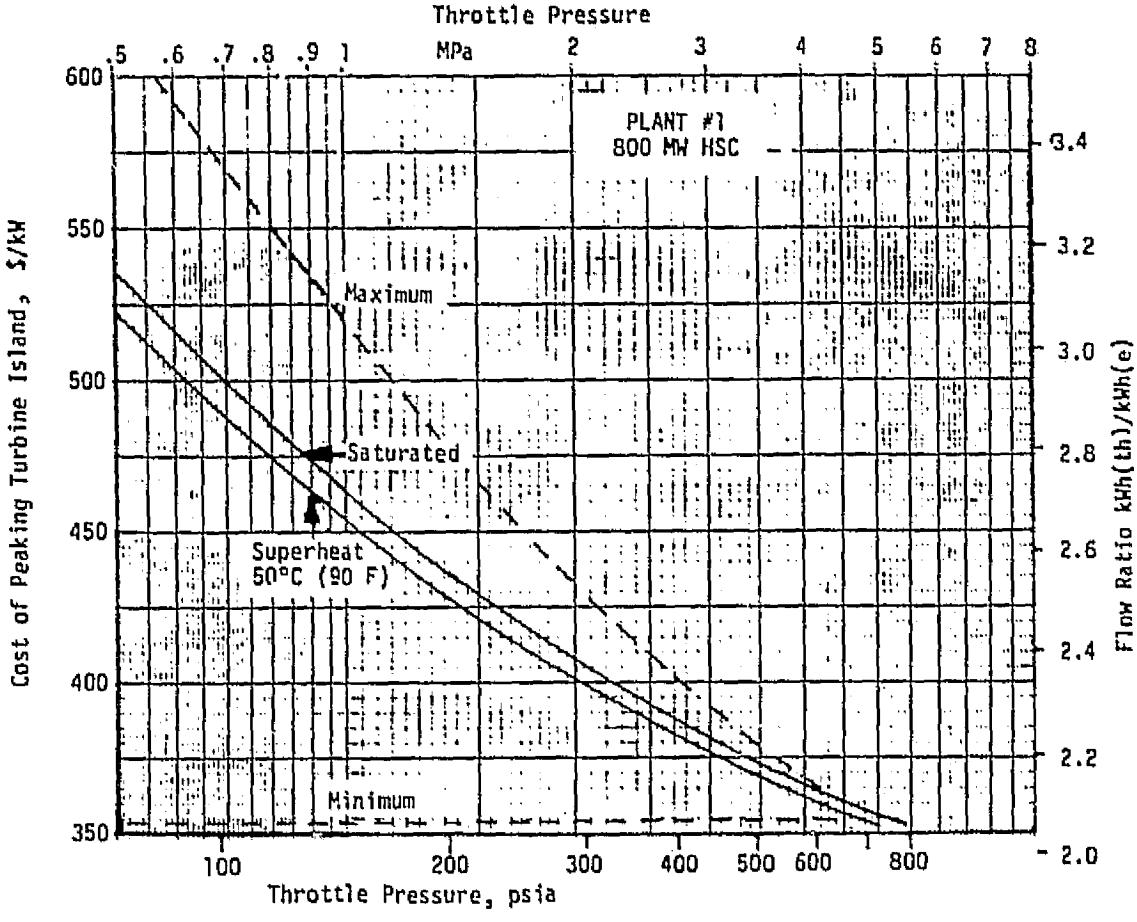

Figure 3-13. Specific Cost of Peaking Turbine Island for Plant #1 as a Function of Throttle Pressure

Capital Cost of TES. The capital cost of peaking power from a TES system on the basis of $/kW is considered to be the incremental increase in TOTAL investment plant cost as a result of adding TES divided by the incremental increase in peak power available also as a result of adding TES.

Cost of Electricity of TES. Another sometimes useful economic measure of storage concepts is the cost of electricity (COE) in mills per kilowatt hour ($/MWh). The value for COE of a Baseline/TES plant can be useful in giving additional perspective in the comparison of TES with other forms of storage or with other means of peak-load generation. However, great care must be used in assuring that all the economic assumptions made in COE for TES plants match the assumptions made in the other systems to which they are to be compared. There are many more assumptions involved in the COE than there are in the comparison of capital costs, and correspondingly, chances for error and ambiguity.

The cost of electricity of peaking power from a TES system is obtained in a manner similar to capital costs by basing the costs on the incremental increases as a result of adding TES. The fixed costs are based on the incremental costs as determined above, multiplying by a fixed charge rate to determine the annual incremental costs and dividing by the hours of peaking operation per year. Fuel costs are based on the costs of fuel as projected by Reference 3-17 using a levelizing factor for a 30 year period. The quantity of fuel is based on the product of the normal plant efficiency and the turnaround efficiency for TES operation. The operation and maintenance (O&M) costs are assumed to be proportioned to the fuel costs.

During TES charging an alternate power system must be used in a utility to replace the reduced output. The fuel used in the alternate system may be a more expensive fuel than that being used in the TES plant for charging, however, in this analysis it was assumed to be the same as that used by the TES plant.

EVALUATION OF SYSTEMS

During the Task I screening various analyses were made to aid in the selection of values of many of the parameters of the TES systems. Some of the analyses involved only particular components while others required consideration of the entire base plant incorporating the TES system. Various portions of the methodology described previously were used in these analyses. Reference 3-1 should be consulted for a more detailed consideration of the assumptions, methodology, and results of these evaluations.

High Temperature Water Systems

For a given pressure, and hence temperature for saturated water, and a given mode of extraction of water or steam the type of containment has very little effect on the system performance. The cost of these various types of containment can therefore be compared at various pressures and volumes independent of the remaining systems.

Costs from the sources discussed previously are all plotted together in Figure 3-12. The costs shown in this figure are direct costs and must be converted to TOTAL investment costs for consistency with the other costs when considering the entire plants.

Data from Gilli for the PCIV (curve 1, Figure 3-12) for other volumes (V) and pressures (P) can be approximated by: $\$/m^3 = 1248\ (0.953 + 376/V)\ (0.264 + 0.1226\ P)$, where V is in m^3 and P is in MPa. In order to display the comparative costs graphically, this relationship is shown on Figure 3-12 for the 8000 m^3 size. It will be noted from the above that only a few percent savings could be expected from larger size, so 8000 m^3 will be taken as the module.

For 400 MW_e and 6 hours peaking, i.e., 2400 MWh stored, a volume of 120,000 m^3 would be required if the specific output, e_o, of a TES system were 20 kWh/m^3. This would require 15 PCIV modules of 8000 m^3 size.

A similar curve is plotted for the PCPV (curve 2) from Glendenning. This data can be approximated by: $\$/m^3 = 1600\ (0.264 + 0.1224\ P)$ for the

only size shown, 28,800 m^3. Again, multiple modules would be required for the duty described above.

Three modules for coal gasification conceptually designed by Ralph M. Parsons, Inc. had pressure, temperature, and volume requirements as follows:

A.	Absorber	- 1620 m^3	- 7.5 MPa	- 66°C
B.	Dissolver/Separator	- 4400 m^3	- 13.8 MPa	- 455°C
C.	Gasifier	- 1860 m^3	- 7.5 MPa	- 1650°C

The three cases are represented on Figure 3-12 as points labeled 3 (O'Hara). Two at the same pressure of 7.5 MPa are above and below the Glendenning values. The upper one representing the gasifier C above has excessively high temperatures; a significant part of the cost was the cooling system: both refractory bricks inside the steel liner, a thick layer of high temperature concrete, and an elaborate cooling system. The arrow indicates it should be moved downward for comparability. Similarly the lower point at that pressure representing the absorber A is at a low temperature and should probably be raised for comparability. Both A and C are smaller in volume than the 28,800 m^3 for the curve 2 so might well be higher in specific cost. The higher pressure point for case B similarly falls a little above curve 2.

Glendenning's result for steel vessels is a straight line (curve 4) indicating that it comprises multiple small modules optimum for the pressure rating. R.M. Parsons found it necessary to use two to nine steel vessels to match the capacity of PCPV cases A, B and C. These are represented by points 5 (O'Hara's) and are considerably higher than the former.

For a single steel vessel of a given size, the variation in cost with pressure is given by Guthrie (Reference 3-21) as $P^{0.6}$, shown as curve 6.

For the underground cavity (Dooley) there are costs both for the cavity itself and for the shaft(s) from the surface. Shafts are needed to access the cavity, remove the muck during construction, and to carry steam pipes and other services from the cavity.

No indication of sensitivity of completed cavity cost to pressure is given by Dooley. It is assumed that the cavity depth is proportional to pressure so that the rock overburden pressure will be compatible with the storage pressure. Probably the costs of excavation, rock preparation, lining, and injecting high strength concrete between rock and liner will not be very sensitive to the pressure or depth.

Cavity costs, if independent of pressure, are related to energy or volume of the cavity. For the smallest cavity described, 29,000 m^3, the direct costs of the cavity, 5.03 M$, gives a specific cost of 172 $/$m^3$. For larger cavities this was estimated to vary roughly in proportion to $V^{-0.22}$

Shaft direct costs are estimated as 15.27 M$ and 20.98 M$ for depths of 360 to 720 m (for storage pressures of 6.9 and 13.8 MPa). These energy related costs total roughly 5 M$ out of 15.27 and 10 M$ out of 20.98 M$. The remainders, 10.27 and 10.98 M$, are roughly independent of depth and pressure. These values are for a shaft designed for 500 MW power capability or 10.5/0.5 = 21 $/kW power-related cost.

A 500 MW_e power capability for 6 hours discharge (3000 MWh) requires about 6 cavities of 29,000 m^3 at 18 kWh/m^3. Distributing the pressure dependent part of the shaft cost over the cost of these cavities leads to an energy-related specific cost of (172 + 4 P) $/$m^3$. Using similarly the R&D Associates (Dooley) data for a 200 MW shaft and two cavities, such as might be suitable for 15 percent swing, gives a power-related component of 48 $/kW and an energy-realted cost of (172 + 9 P). These energy-related costs are shown as the lower and upper curves 7 on Figure 3-12.

It is evident from the exponent of cost versus volume of cavity and from the decrease in shaft costs per kilowatt with increased capacity that underground excavation costs are more susceptible to economies of scale than the other forms of containment for which multiples of reasonably small modules seemed to be required. Since the UG cavity costs are considerably less than the other forms, no attempt will be made to justify larger cavity sizes than the one described. The upper curve 7 was used for small swings and the lower one for large swings.

In aquifers it was assumed that there would be two wells per installation. Costs of $150,000 to $450,000 per installed doublet well including pumps for a 20 MW thermal capability of heat injection and withdrawal were assumed by Meyer. Using $400,000 gives 20 $/kW direct costs. The heat exchanger (necessary with aquifer storage) will cost an additional 20 $/kW, totaling 40 $/kW. The above assumes a storage temperature of 175 - 200°C and a return, or supplementary storage temperature of 70°C. Because of the limitations of aquifer storage, however, it will not be considered further for daily storage.

From this data it is clear that underground containment, where the stresses to contain the high pressure water are absorbed by the ground, is much cheaper than aboveground containment. Of the aboveground systems the PCIV appears to be the cheapest on the basis of data obtained from the references. If other types turn out to be better on the basis of more detailed designs, a change to another containment type should have little effect on the rest of the system.

Containment Mode, Storage and Throttle Pressure and Number of Evaporators. Using the costs previously developed, the total installed costs per kW of peaking power, $/kW, were determined for several combinations of modes, pressures and evaporators for both the large high sulfur coal (HSC) plant and the nuclear (LWR) plants utilizing high temperature water storage. The results for the HSC plant utilizing a PCIV for containment are summarized in Table 3-8.

Table 3-8

SUMMARY OF TES SYSTEM COSTS WITH LARGE HIGH SULFUR COAL PLANT
(High Temperature Water Systems Using PCIV)

Mode	Variable Pressure Accumulator					Expansion			Displacement			FWS
P_{stor}, MPa	4.65	4.65	4.65	1.03	2.41	4.65	4.65	4.65	4.65	4.65	4.65	5.0
$P_{throttle}$, MPa	2.24	1.72	1.03	0.52	1.20	2.24	2.24	2.24	2.24	2.24	2.24	-
--						-	1.21	1.21	-	1.21	1.21	-
--						-	-	0.16	-	-	0.16	-
Turnaround Efficiency, η_{TA}	0.88	0.84	0.77	0.94	0.78	0.82	0.78	0.60	0.83	0.79	0.61	0.88
Specific Output, kWh/m^3	15.0	18.2	22.5	6.6	10.24	11.33	18.9	28.3	13.9	21.3	30.6	40.0
Swing, ± From Normal	0.50	0.50	0.50	0.15	0.50	0.50	0.50	0.50	0.50	0.50	0.50	0.15
$/kW												
PCIV - Primary Tank	900	742	600	870	884	1194	714	477	971	634	441	340
- Supplementary Tank	-	-	-	-	-	641	261	69	107	93	55	49
- Capital Cost due to η_{TA}	26	38	58	12	56	43	53	128	39	50	123	26
Energy Related	926	780	658	882	940	1878	1028	674	1117	776	619	415
Evaporators	-	-	-	-	-	10	10	20	10	10	20	-
Turbines	400	420	465	535	446	400	422	536	400	422	468	359
Added Feedwater Heaters	-	-	-	-	-	-	-	-	-	-	-	136
Power Related	400	420	465	535	446	410	432	556	410	432	488	495
TOTAL Investment, $/kW	1326	1200	1123	1417	1386	2288	1460	1230	1527	1208	1107	910

Variable pressure accumulator.

Throttle pressure. For the variable pressure accululator and storage pressure of 4.65 MPa (675 psia) three throttle pressures were investigated. As throttle pressure is reduced the specific output from storage increases but the turnaround efficiency decreases. The peaking power costs in $/kW decreases with decreases in throttle pressure over the range explored reducing the TOTAL investment cost to 1123 $/kW. There is clearly a limit, since at a throttle pressure equal to condenser pressure, output is zero. The high specific volume of steam at pressures below 1 MPa requires very large pipes and expensive turbine technology.

Storage pressure. Two cases of reduced storage pressure were explored, namely 2.41 MPa and 1.03 MPa. Since the cost of PCIV containment goes down with reduced pressure (from Figure 3-12), the specific cost of the PCIV is 699 and 488 $/m^3, compared to 1041 $/m^3 at a pressure of 4.65 MPa. In each of these cases the pressure ratio of storage to throttle pressure was kept at 2:1. The specific output decreases as rapidly as the specific cost of the PCIV decreases so there is a negligible gain from a storage pressure reduction.

Of the Variable Pressure Accumulator cases explored, the third column gives the most favorable results with energy-related costs of 658 $/kW, power-related costs of 465 $/kW, and TOTAL investment cost of 1123 $/kW.

Expansion accumulator. With Expansion Accumulators external evaporators are used for steam generation, and when there are multiple evaporators in cascade, steam at two or three throttle pressures is fed into separate turbines. Almost all of the HTW is removed from the expansion accumulator; that which is not flashed to steam must be stored in a separate tank at the drain pressure and temperature. For a single evaporator at a storage pressure of 4.65 MPa and throttle pressure of 2.24 MPa the supplementary tank

or drain storage volume is 83 percent of the storage tank volume, and must stand a pressure of 2.24 MPa. Also the specific output is lower than for the variable pressure accumulator at the same throttle pressure. As a result, the energy-related costs are 1878 $/kW.

Evaporators are very small in volume compared to storage volumes, and are very simple and low in cost. Including the valves and piping associated, the cost is estimated at 10 $/kW within a factor of 2. The resultant TOTAL investment cost for a single evaporator is 2288 $/kW.

Multiple Evaporators. The specific output is markedly improved by multiple evaporators and a lower steam pressure at the final evaporator. Since the third evaporator at very low pressure will be larger, the specific cost is arbitrarily doubled. Neither of these values play a significant role in screening. Both the size and the pressure of the supplementary tank required for drain storage are reduced, leading to further reductions in cost. However, with multiple steam supplies generated, a turbine for each throttle pressure must be costed. The share of the output power produced by each turbine is in proportion to the increment in specific output.

Despite the lower turnaround efficiency, the three-evaporator case costs less than the two-evaporator case. However, the use of very low pressure steam at 0.16 MPa (23.5 psia) for a fairly large power capacity (over 130 MW_e) may pose very difficult turbine design problems.

Displacement accumulator. As with the expansion accumulator, evaporators are required, and some supplementary storage. However, in the thermocline mode, the bulk of the HTW is always in the main pressure vessel either as hot or cold water. Only enough supplementary tankage is needed to account for the expansion of the water when heated. The specific output of the first evaporator is about 20 percent higher than the corresponding expansion accumulator case.

The significant decrease in the cost of both storage and supplementary tanks reduces the energy related costs to 1117 $/kW, with a corresponding reduction to 1527 $/kW in the TOTAL investment costs.

Multiple Evaporators. The improved specific output of the first evaporator improves the combined specific outputs for the two- and three-evaporator cases reducing the energy-related costs below the expansion accumulator counterpart. Since the highest pressure turbine produces a larger share of the total power produced, the turbine cost is also less, and for three-evaporator case the TOTAL investment cost, 1107 $/kW, is closely comparable to the best value found with the variable pressure accumulator, i.e., 1123 $/kW.

Feedwater storage. Feedwater storage, or manipulation of the relative mass flow in the feedwater heat train during the charge and discharge cycle inherently has a high specific output, i.e., 40 kWh/m^3, and results in 340 $/kW for the PCIV tank - the lowest of all the cases.

A displacement accumulator, or a two-tank system, can be used for feedwater storage; a two-tank system is assumed in Table 3-8, so the cost of the supplementary tank reflects the large volume for cold water that must be stored between discharge and charge. For the displacement mode, this cost item would be reduced by a factor of about four.

To estimate the cost of increased capacity in the main turbine, allowance must be made for the increased requirement of feedwater heaters for increased steam extraction during the charge cycle, and the fact that the added turbine capacity during discharge does not require feedwater heaters. A cost item for a major addition of feedwater heaters to the main turbine complement is in part balanced by a deletion of the feedwater heater cost from the added turbine cost.

The TOTAL investment cost for this case is 910 $/kW: 415 energy-related and 495 power-related. It is lower than any of the other cases explored. As noted earlier, however, feedwater storage cannot be used at 50 percent swing; 15 percent swing was assumed in this case.

Nuclear LWR Plant. A similar set of analyses were made for the 1140 MW nuclear plant, and results are shown in Table 3-9.

Table 3-9

SUMMARY OF TES SYSTEM COSTS WITH NUCLEAR (LWR) PLANT
(High Temperature Water Systems Using PCIV)

Mode	Variable Pressure Accumulator		Expansion		FWS
P_{stor}, MPa	6.21	6.21	6.21	6.21	3.70
$P_{throttle}$, MPa	3.10	2.59	3.10	3.10	-
--			-	1.21	-
Turnaround Efficiency, η_{TA}	0.90	0.87	0.83	0.77	0.88
Specific Output, kWh/m^3	15.4	17.9	10.9	21.3	30.0
Swing, ± from Normal	0.50	0.50	0.50	0.50	0.15
$/kW					
PCIV - Primary Tank	1078	927	1522	779	388
- Supplementary Tank	-	-	794	213	50
- Capital Cost due to η_{TA}	19	26	34	52	23
Energy Related	1097	953	2350	1044	461
Evaporators	-	-	10	10	-
Turbines	394	412	394	435	375
Added Feedwater Heaters	-	-	-	-	462
Power Related	394	412	404	445	462
TOTAL Investment, $/kW	1491	1365	2754	1489	923

A higher IP inlet steam pressure is available in the LWR plant than in the HSC plant. This makes a higher storage pressure feasible (6.21 MPa) and increases both the specific $\$/m^3$ cost of PCIV and the specific output.

The feedwater storage case is the least costly, as with plant #1. The specific output is 30 rather than the 40 kWh/m^3 found for plant #1, due mostly to the smaller temperature differential from hot to cold feedwater.

Alternate Containment Types. Containment costs shown in Figure 3-12 were used as a basis for determining TOTAL investment costs of plants with other types of containment. The results are shown in Table 3-10.

Table 3-10

SUMMARY OF TES SYSTEM COSTS WITH ALTERNATE TYPES OF CONTAINMENT
(High Temperature Water Systems)

	Variable Pressure Accumulator		Expansion		FWS	
Mode	HSC	LWR	HSC	LWR	HSC	LWR
P_{stor}, MPa	4.65	6.21	4.65	6.21	5.0	3.70
$P_{throttle}$, MPa	1.72	2.59	2.24	3.10	-	-
--			1.21	1.21		
--			0.16			
Turnaround Efficiency, η_{TA}	0.84	0.87	0.60		0.88	0.88
Specific Output, kWh/m^3	18.2	17.9	28.3		40.0	30.0
Swing, ± from Normal	0.50	0.50	0.50		0.15	0.15
TOTAL Investment, $/kW						
PCIV	1200	1365	1230	1489	910	923
PCPV	1407		1383		1019	
Steel	2758		2231		1624	
Underground Cavity	649		645	720	775	800

In all cases the underground cavity gives the lowest TOTAL investment cost of peaking power, particularly for those systems designed for larger swings that require larger storage volumes. Of the aboveground systems the PCIV looks best as discussed earlier.

Low Vapor Pressure Systems

Low Vapor Pressure (LVP) systems, also called sensible heat systems, atmospheric pressure, or one-bar systems, is the second major class of selections considered. The names above describe related characteristics of the systems; a liquid is used for heat transfer and storage that has a low vapor pressure (less than 0.1 MPa) at the temperatures of interest for storage, so that containment may be at atmospheric pressure (i.e., one bar). This results in low cost containment compared to those discussed for HTW containment. The system data used as an example in the modeling described earlier gives a direct cost of $295,700 for a tank of 12190 m^3, or a specific cost of 24.3 $\$/m^3$.

To use such low cost containment, storage media of higher cost than HTW must be used, and heat-exchanger trains must be used to keep the HTW and steam separate from the storage media yet transfer heat to and from storage. The costs of these items must be compared to the reduced containment cost.

Sensitivity to α and M_c. As discussed earlier, two parameters affecting the costs and performance are the mass flow ratio of oil to steam in the heat exchanger, M_c, and the minimum ΔT between the two fluids in the heat exchanger, α. The effect of both M_c and α on turnaround efficiency and TOTAL investment costs are shown in Figure 3-14 for the HSC plant.

Increasing the mass flow ratio, M_c, or decreasing α, permits decreasing the temperature drop between the charge steam and discharge steam thereby increasing the turnaround efficiency. The same trend also generally increases the TOTAL investment cost because of the greater mass of storage required (as M_c increases) and the larger heat exchanger area required (as α decreases).

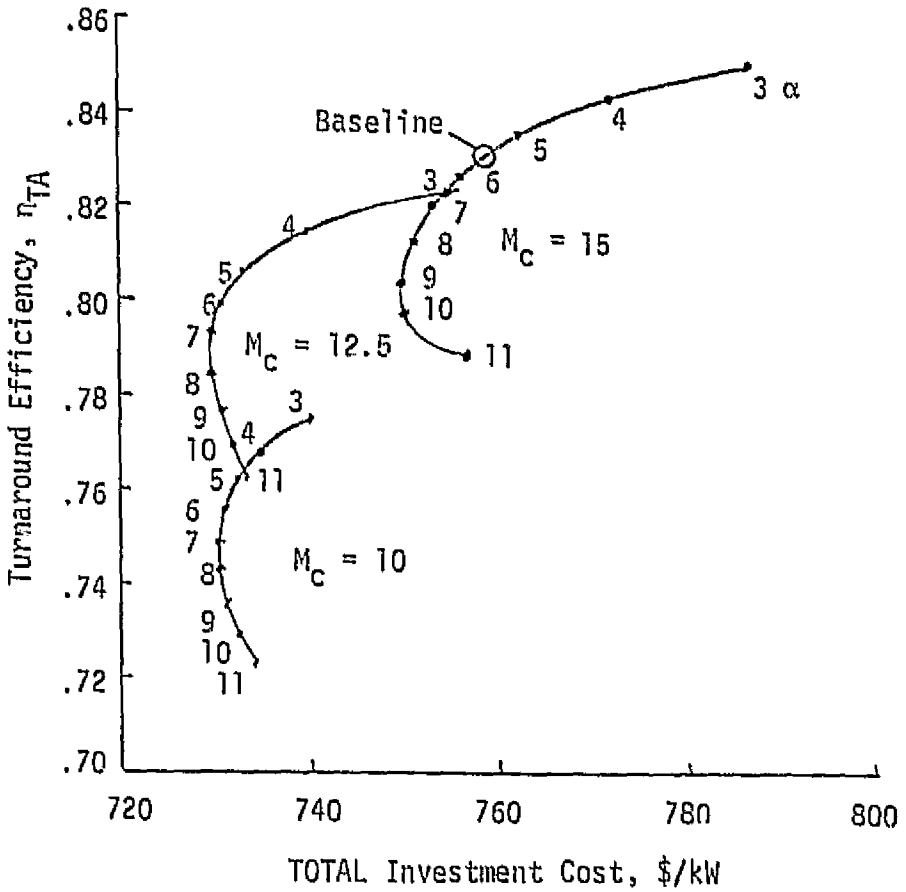

Figure 3-14. Effect of Approach ΔT, α, and Mass Flow Ratio, M_c, (oil to steam) on Turnaround Efficiency and TOTAL Investment Cost

For low values of M_c or high values of α that result in low turnaround efficiencies, decreasing M_c or increasing α can also increase TOTAL Investment cost because of the increasing effect of turnaround efficiency at low values on cost.

For the HSC plant, baseline values selected for further analysis were M_c = 15 and α = 5.6°C (10°F). Other parameters selected were charge steam at IP turbine conditions 4.86 MPa (705 psia), 306°C (584°F), 44°C superheat (90°F) and discharge steam at 2.01 MPa (292 psia), 251°C (484°F). Storage was in granite rock-beds with voids filled with the heat transfer fluid, Exxon Caloria HT-43 or its equivalent. It was assumed that the volume of the storage media was 25 percent oil and 75 percent rock.

Values of M_c and α, along with the properties of the oil, such as specific heat, density, and viscosity as a function of temperature, dominate the design of the heat exchanger. The properties of HTW and steam also contribute to the heat transfer coefficient, determining the area of heat exchange systems required for each part of the heat exchanger train.

The direct cost of these heat exchangers for the baseline case is 30.6 M$. Converting to specific TOTAL investment costs for 50 percent swing gives 165 $/kW. This is one of the power-related components of storage cost, shown in Table 3-11 in a format similar to Tables 3-8 and 3-9.

Table 3-11

SUMMARY OF TES SYSTEM COSTS WITH LARGE HIGH SULFUR COAL PLANT
(Low Vapor Pressure Systems)

	Caloria HT-43				HITEC		
Fluid	Oil	Oil	Oil	Oil	Salt	Salt	Salt
Fraction	0.25	0.25	1.00	0	1.00	0.25	0
Rock							
Fraction	0.75	0.75	0	1.00	0	0.75	1.00
α, ^oC	5.6	8.4	5.6	5.6	5.6	5.6	5.6
Mass Flow Ratio, M_c, lb oil/lb steam	15.0	12.5	10.0	10.0	20.0	20.0	20.0
$P_{throttle}$, MP.	2.28	1.47	1.24	1.24	1.81	1.81	1.81
Turnaround Efficiency, η_{TA}	0.83	0.78	0.76	0.76	0.75	0.77	0.79
$/kW							
Medium and Tanks	154	134	281	68	1138	370	75
Capital Cost due to η_{TA}	39	55	61	61	62	56	50
Energy Related	193	188	342	129	1200	426	125
Heat Exchanger	165	123	125	125	85	85	85
Turbines	400	418	435	435	416	416	416
Power Related	565	541	560	560	501	501	501
TOTAL Investment, $/kW	758	729	902	689	1701	927	626

The peaking Turbine Island cost as before is 400 $/kW for 2.28 MPa throttle pressure. The costs of the storage media and tankage are dependent on the media used, their configuration, and the assumed costs of the media. As indicated above, the selected baseline system uses Caloria HT-43 and rock in packed beds.

For the baseline case the oil required is 57,500 m^3 (54,750 tons; 15.2 M gal). The rock required is 560,000 Mg (615,700 tons). The tankage required is 289,000 m^3 (10.2 M ft^3). The cost of these may be totaled: 12.21 M$ for oil, 9.24 M$ for rock, 7.02 M$ for the 16 tanks, totaling 28.47 M$ direct costs. TOTAL investment costs for the medium and tankage are 154 $/kW. The TOTAL investment cost for the TES system base case, given in the first column of Table 3-11, is 758 $/kW.

The minimum cost value within the range explored (Figure 3-14) is the point representing M_c = 12.5, α = 7.5. System costs for values near these (α = 8.4) are given in column 2 of Table 3-11. The improvement from the base case of 758 to 729 $/kW is 4 percent.

Sensitivity to Media Cost. The cost of TES is also sensitive to the properties of the storage media, including their specific cost in $/kg or $/$m^3$. For the selected case, the shares of the medium and tankage cost item are 0.429 oil, 0.324 rock, and 0.247 tankage. Use of a more expensive oil such as Therminol, at 10 $/gal versus 0.80 $/gal would increase the medium costs by 760 $/kW. Rock costs in most of the United States can be as low as 3 to 6 $/ton for crushed granite or similar rock, washed and screened to a size class, e.g., 1.9 to 2.5 cm (3/4 to 1 in.). The more rounded river bed gravel can cost 13 to 15 $/ton; $15 was used in the selected case. Special solid materials such as taconite pellets, alumina, or magnesia spheres can be considered more costly; taconite has been estimated at 40 $/Mg (36 $/ton).

If lower cost rock can eventually be used, i.e., is found to be compatible with oil over the temperature range of the selected case, for long periods of time with low makeup and maintenance costs the value

of medium and tankage could be decreased. For rock at $5 rather than $15/ton the cost would be decreased by 33 $/kW.

Sensitivity to Packing Volume Fraction. Deviations from the assumed ratio of a packing volume fraction of 75 percent for rock and 25 percent for oil can be considered. At one extreme the rock packing fraction can go to zero, i.e., only oil is used. At the other extreme are "drained bed" concepts in which the voids between pebbles are normally filled with inert gas, and the oil is only used as a heat transfer fluid during charge and discharge. Much less oil is required for these concepts; as a limit, the cost of the TES systems with 100 percent of the thermal storage in rock can be considered.

These two extremes are shown in columns three and four of Table 3-11. With all oil a lower value of M_c should be used to reduce the cost, but the TOTAL investment cost increased from the base case of 758 to 902 $/kW.

At the other extreme, drained rock-beds in which the oil only functions as a heat transfer fluid, the results for the same M_c of 10 and α of 5.6^{o}C are shown in the fourth column. TOTAL investment cost is now reduced to 689 $/kW. A more reasonable approximation to a drained bed to allow for filling the pipes and heat exchangers and wetting the rock with oil is probably a fluid fraction of 0.10.

Other Heat Transfer Fluids. Other materials than Caloria HT-43 can be used as the heat transfer fluid. Many are more expensive but have advantages such as less degradation at high temperatures, better compatibility with low cost rock-beds, or better heat transfer capability. Two such fluids proposed are molten salts, such as HITEC or PARTHERM 290, and molten sulfur. Three cases for using HITEC as the heat transfer fluid are included in Table 3-11. It is clear from Table 3-11 that the economics of an all molten salt system (100 percent volume fraction) is not favorable compared to the other LVP systems and many of the HTW systems.

The drained bed case with salt is less costly than the drained bed case with oil because the heat transfer characteristics of molten salt are better than oil. A fouling factor must be included in considering oil as a heat transfer fluid, since the high molecular weight degradation products tend to coat the heat exchange surfaces; HITEC is sufficiently clean that no fouling factor need be assumed. Comparing literature values and those offered by some proponents indicates that the heat transfer coefficient, U, for HITEC and comparable salts may be as much as an order of magnitude better than for oil. This is particularly important for the boiler and condenser heat exchanger, when the liquid side contribution to U dominates, but has appreciable impact on superheaters and subcoolers as well.

Feedwater Storage. The feedwater storage mode uses Caloria HT-43, and separate tanks for storage of hot oil and cold oil. For discharge, an oil to water counter flow heat exchanger is used to heat feedwater from $80^{o}C$ to $227^{o}C$, in the case of the LWR plant. During the charge cycle the steam extraction from the main turbine is increased at all extraction points to heat oil to a temperature higher than $227^{o}C$ by the approach α to be used in the discharge heat exchanger design.

The cases studied in Table 3-11 showed that an all-oil system is considerably more costly than one with 25 percent volume fraction of oil in a packed-bed thermocline system. Use of hot and cold tanks instead of a thermocline would make it still more costly. In order to compare feedwater storage most favorably to steam generation systems, the packed-bed thermocline system will be assumed. The added cost for all-oil can be estimated.

The results of the case studies for the LWR plant using feedwater storage with an oil/rock system is summarized in Table 3-12. In the first column an α of $11.1^{o}C$ ($20^{o}F$) was assumed for a TOTAL investment cost of 751 $/kW. Doubling α reduced heat exchanger costs and although the turnaround efficiency also decreased, the TOTAL investment costs decreased to 670 $/kW.

Table 3-12

SUMMARY OF TES SYSTEM COSTS WITH NUCLEAR (LWR) PLANT
(Low Vapor Pressure Systems with Feedwater Heating)

Fluid	Oil	Oil
Fraction	0.25	0.25
Rock		
Fraction	0.75	0.75
α, ^{o}C	11.1	22.2
Turnaround Efficiency, η_{TA}	0.85	0.76
$/kW		
Medium and Tanks	80	80
Capital Cost due to η_{TA}	29	51
Energy Related	109	131
Heat Exchangers	253	150
Turbines	389	389
Power Related	642	539
TOTAL Investment, $/kW	751	670

Discharge Time

With systems utilizing peaking turbines, they are assumed to operate at their design output, hence varying the design output implies varying their size with no change in efficiency or heat rate of the peaking power. The output power and discharge time, therefore, affect the storage volume but not the turnaround efficiency.

The main unit is assumed to be a fixed size operating at reduced load during the change cycle. The leaving-loss correction effectively modifies the efficiency as a function of steam flow through the turbines. It was found that there is a minimum steam flow rate, and hence a maximum rate

at which to charge the TES system. However, as exit velocity and mass flow rate are roughly proportional; a 30 percent decrease in mass flow (and in power output) has little effect on efficiency but a much greater decrease in mass flow would carry an efficiency penalty (see Figure 3-15). For a given discharge period and peaking swing, e.g., 6 hours and 50 percent swing, the optimum charging period may be longer than reasonably attainable for the utility daily load pattern ratio of off-peak hours to peak hours.

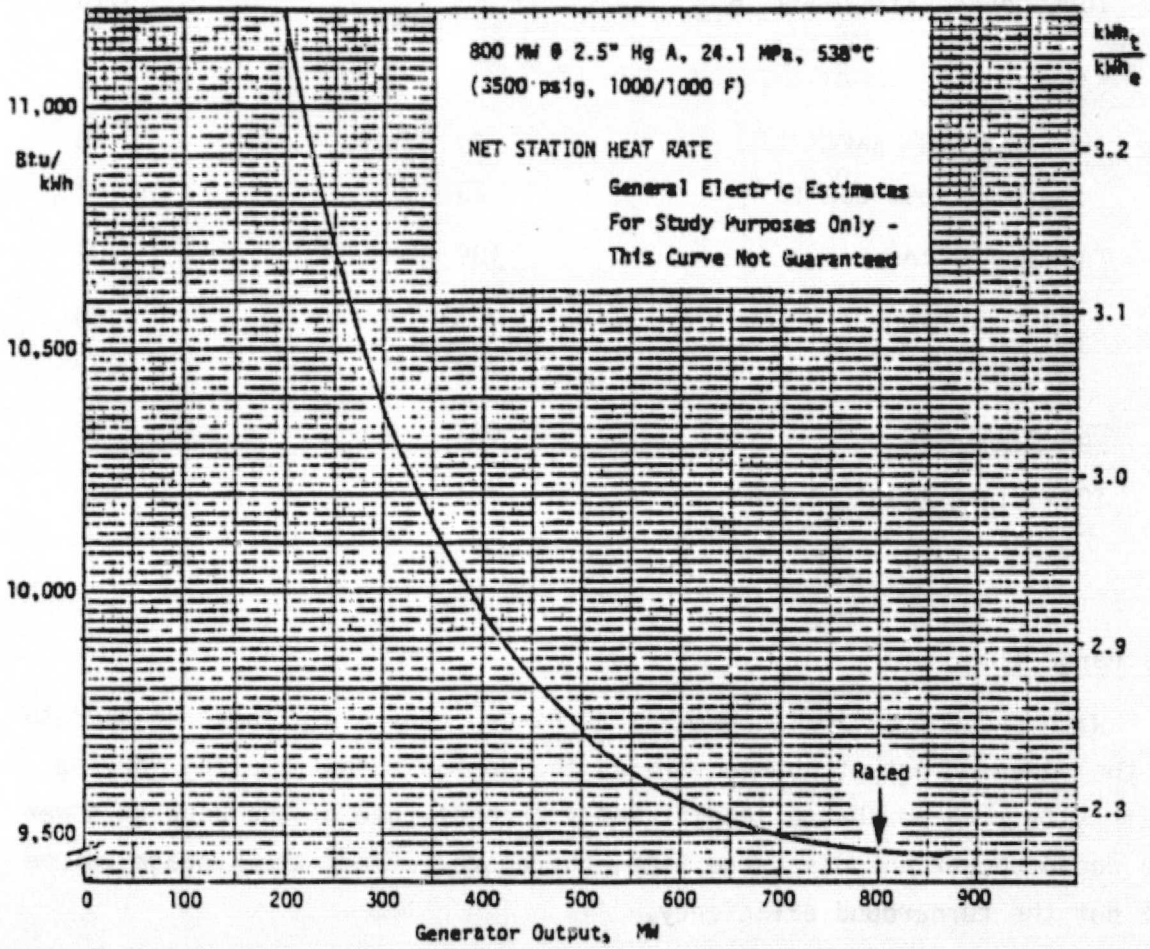

Figure 3-15. Net Station Heat Rate Versus Load

at which to charge the TES system. However, as exit velocity and mass flow rate are roughly proportional; a 30 percent decrease in mass flow (and in power output) has little effect on efficiency but a much greater decrease in mass flow would carry an efficiency penalty (see Figure 3-15). For a given discharge period and peaking swing, e.g., 6 hours and 50 percent swing, the optimum charging period may be longer than reasonably attainable for the utility daily load pattern ratio of off-peak hours to peak hours.

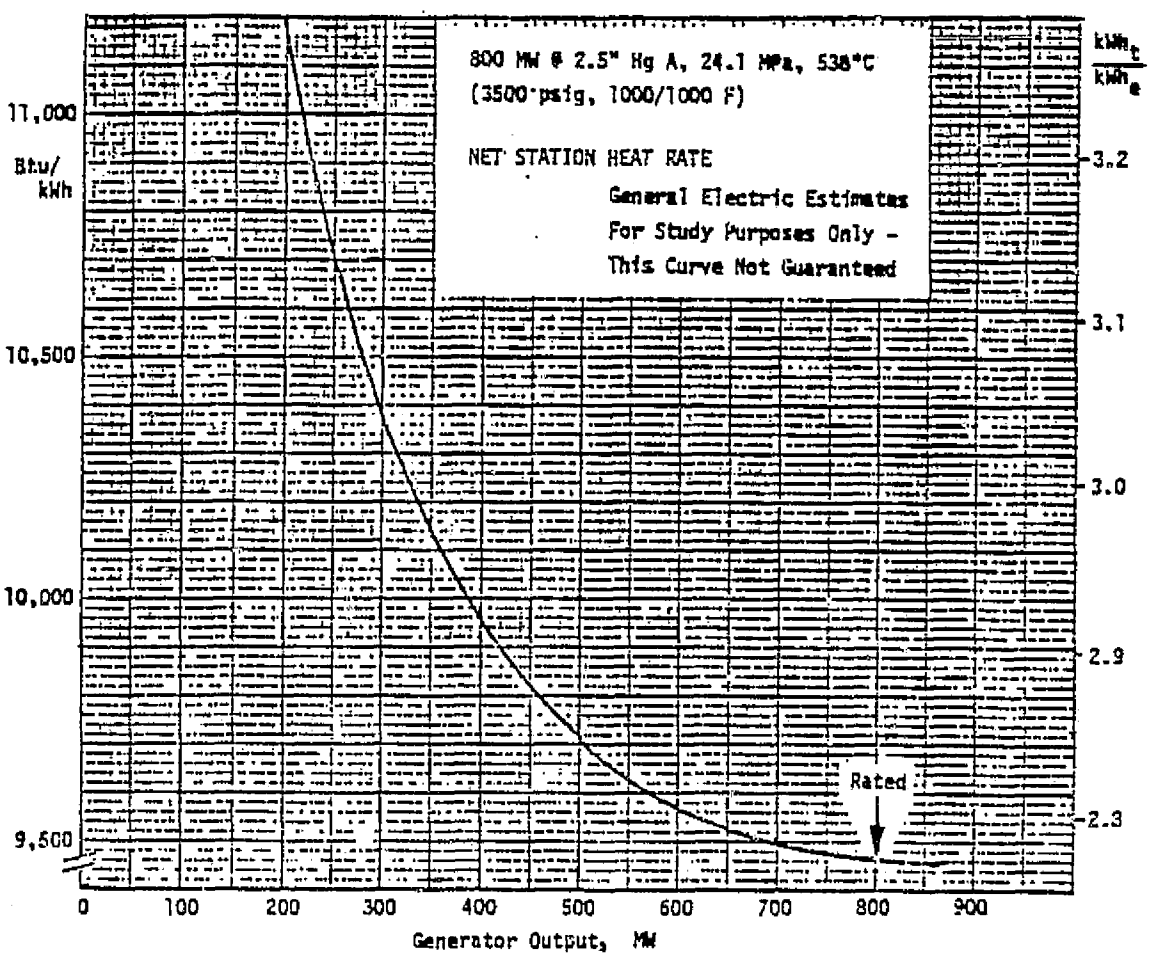

Figure 3-15. Net Station Heat Rate Versus Load

To explore the effect of charge time, daily charge periods of 6 to 16 hours were considered for 6 hours of discharging, i.e., discharge to charge ratios of 1.0 to 0.37 for the HSC plant using a variable pressure accumulator. The results are shown in Figure 3-16. The turnaround efficiency is shown as a function of the discharge/charge time ratio for several values of peaking swing. From these results it is clear that long charging times are desirable, particularly for large peaking swings. This is true simply because the main turbines can operate closer to their "optimum" output when long charging times are available. However, operational considerations impose constraints that prevent extremely long charge times. A 6-hour discharge time and an 8-hour charge time (corresponding to a ratio of 0.75) are chosen as a base case representative of typical daily-load curves, and are used for most other calculations, bearing in mind that longer charging times would improve the efficiency.

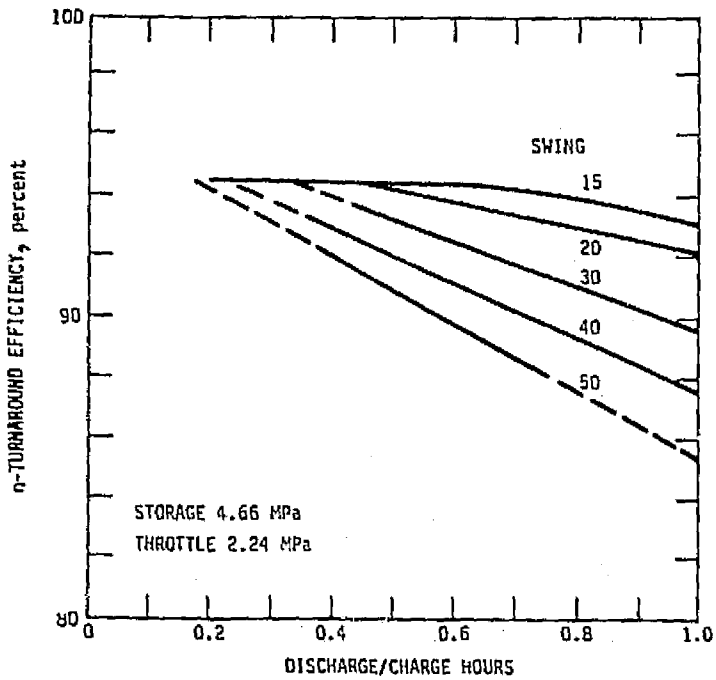

Figure 3-16. Effect of Discharge/Charge Time Ratio on Turnaround Efficiency

SELECTIONS

Some of the criteria used earlier in the preliminary screening will be discussed for the twelve concepts to aid in arriving at a recommended set of TES plants for more detailed conceptual designs in Task II. The set of twelve selections are shown in Table 3-13 along with a ranking of two criteria - near term availability and cost.

On the basis of results from the previous section, parameters and operating conditions were selected for each of the twelve concepts being considered.

The principal purpose of discussing the relative value of the selections on these and other criteria selected earlier is to assess the impact that particularly good or bad features may have on the preliminary ranking by cost. A major fault could move a selection downward, or a unique advantage move it upward. Minor differences will not be emphasized, nor are they likely to alter rankings unless a confluence of many advantages seems to merit it.

Table 3-13

ECONOMIC AND NEAR-TERM AVAILABILITY RANKING

Selection Number	Short Title	Costs Energy ($/kW)	Costs Power ($/kW)	Costs TOTAL ($/kW)	Rank - Economic	Rank - Near-Term Availability
1	PCIV-FWS	461	462	923	6	4
2	PCPV-FWS	524	495	1019	9	4
3	STEEL-FWS	1129	495	1624	12	1
4	UG-C-VARP	172	477	649	1	3
5	UG-A-FWS	108	667	775	5	6
6	UG-A-EVAP	180	487	667	2	4
7	AQUIFER	75	855	930	8	6
8	OIL-FWS	132	538	670	3	5
9	OIL/ROCK	188	541	729	4	3
10	OIL/SALT	---	---	~1400	10	2
11	SALT/ROCK	426	501	927	7	4
12	PCM	>1000	---	~1500	11	8

Costs

Summary Table 3-13 indicates the results in $/kW for the case chosen to represent each selection. For ready reference, the energy-related and power-related costs are also given in separate columns. Since all cases were for six hours discharge, the energy-related costs in $/kWh can be found by dividing the energy related costs by six. The rank ordering by TOTAL cost charged to the TES concept is given in the sixth column. TOTAL cost as used here is the TOTAL investment cost as defined earlier.

Although the economic ranks are numbered sequentially, it is apparent that there are several groups with relatively small TOTAL cost differences. In sequence, #4, #6 and #8 are all in the 649 to 670 $/kW range; #9 and #5 are in the 725-775 $/kW range; #1, #7, #11 and #2 are in the 900-1020 $/kW range; #10, #12, and #3 are distinctly higher.

For the purposes of this report it should be noted that components common to many of the selections should affect those selections similarly. For example, the peaking Turbine Island is a significant part of all the concepts, ranging from 400 $/kW to 530 $/kW. While revised estimates from detailed design of specific turbine configurations could move these costs upwards or downwards, they would probably move comparably and not affect the ranking among the above groups.

Some of the components with significant cost are unique to one selection or a small subset. They may be uncertain in cost because of uncertainties in technology that have not been resolved by adequate development and testing to date. These uncertainties can be considered as a factor in judging the near-term availability of the selected concepts.

Near-Term Availability

For near-term availability, and other criteria that are in part subjective, ranking should not only indicate the best and the worst, but should indicate groups that are very comparable in rating and places in the sequence where there is judged to be a large gap. The scale of one

to ten is used, one best and ten worst, with the same rating on similarly valued selections and omitted numbers where there is a large difference in value. A subjective ranking of near-term availability is made in the last column of Table 3-13.

The definition of near-term availability used in the ranking judgments is that the technical uncertainties have either been resolved by demonstration, or could be so resolved in the near future by industry or government action, so that an electric utility customer could order a TES system with "reasonable confidence" by 1985, for delivery and operation during the period 1985 to 2000.

Judgment of near-term availability is mostly concerned with technical problem areas not yet resolved. The principal problem areas are briefly discussed as justification of the rank ordering assigned. In most cases it is a key component, not common to the other selections that are discussed.

Steel Tanks. Steel pressure vessels for containment of materials at temperatures and pressures to and beyond those needed for TES (Selection #3) are state-of-the-art. Design practices are well codified and backed by years of operating experience.

Underground Cavities. The technology of excavating shafts and cavities is well known from mining, tunneling, and other industrial applications. Problem areas specific to Selection #4 include:

- Competent rock must be found. This limits sites to specific regions and requires exploratory drilling on specific sites. Until actual excavation some uncertainty remains.
- Applications that keep the rock at high temperature have not been demonstrated for long-life effects.
- Cycling in temperature and pressure on a daily cycle has not been demonstrated for long-life effects. The proposed mode of operation as a variable pressure accumulator with modest swings in pressure and temperature should minimize these effects.

- Underground cavity volume required is larger than demonstrated by current technology. Until moderate size cavities (30,000 m^3) have been thoroughly demonstrated, larger volumes will have to be obtained by using multiple cavities or possibly using elongated cavities with smaller diameters.

Underground Cavities—Air Supported. Selections #5 and #6 are rated somewhat lower than Selection #4 because of additional problem areas.

- The use of compressed air support for a low pressure containment vessel has not been demonstrated. While there are advantages in accessibility to the cavern components, the problems of air leakage out, water leakage in, pressure seals for access doors, cooling of compressed air, risk of severe pressure swings despite the equalization tank have more technical risk than the concrete-supported cavity.

Oil/Rock. The use of a thermocline tank with oil as a heat transfer fluid, and gravel and sand as the storage medium has been demonstrated for a limited time. Some confidence has been gained, but long-term stability requires demonstration.

- Degradation of the oil by temperature, presence of the rock, or the combination causes maintenance expenses.

- Uncertainties in heat exchangers. General references on heat exchangers give condensing steam to oil heat transfer coefficients as seven to ten times lower than those for condensing steam to water. There may be an uncertainty of two to one in heat exchanger costs for oil.

- Settling behavior of rock beds under thermal cycling has been suggested as a problem area. Tests so far do not indicate that this is a problem and if it turns out to be later there are possible solutions through alternate materials and bed arrangements.

PCIV. The prestressed cast iron vessel of Selection #1 has not been demonstrated at pressures and temperatures of interest.

- Task I emphasis is on a hot-going PCIV with external insulation. Another method is to use a form of thermal insulation suitable for use inside the steel liner of the PCIV. It must be compatible with boiler quality feedwater and able to withstand high pressure while retaining low conductivity. Siempelkamp is reportedly working on such an insulation but has supplied no details.

- The expansion accumulator mode gives lowest daily changes in pressure and temperature, but for the feedwater storage mode of operation chosen for greatest economic viability, this would require a cold storage volume comparable to the hot PCIV volume.

- A displacement accumulator mode would eliminate the large cold tank, but to operate in a thermocline mode the internal thermal insulation would be required. Such insulation would not only greatly reduce the thermal stress caused in the liner and the tank by a thermocline but would greatly reduce the vertical conductivity effects which tend to degrade a thermocline.

PCPV. The prestressed concrete pressure vessel, like the PCIV, has not been demonstrated at the temperatures and pressures of interest. Many very large PCPV's have been used at lower pressures (0.3 MPa to 3 MPa) so there can be considerable confidence in the technology and design principles. Hot-going systems are not feasible so some kind of cooling system is required outside the liner and layer of high temperature concrete.

Salt/Rock. There has been less reported experimentation on the compatibility of molten salt and rock than that reported for oil/rock.

- Degradation rates could be excessive with some forms of rock, e.g., dissolving of some rock constituents.

- Heat-exchanger fouling does not appear to be a problem with pure salt, heat transfer is very good, comparable to water. Effect of degradation products from interaction with rock are not known.

- Lower cost forms of molten salt such as impure HITEC and draw salt are not near-term-available until thorough tests on corrosion and materials compatibility are made.

Aquifer and Phase Change Materials, PCM. Both of these have been labeled as not near-term available. They are also low in economic ranking.

Summary. Although Selection #3, STEEL, is most available, it is also most costly. Availability is not considered to overcome the cost obstacle. Two out of the top four in availability are also in the top four in cost ranking. Selection #6 ranks better than Selection #5 on both

criteria, suggesting that only #6 of these two similar selections be retained unless other criteria strongly indicate otherwise.

Utility Operating Requirements

Site Flexibility. Of the twelve Selections, four are limited to suitable geologic areas. Selections #4, #5 and #6 require competent rocks, suitable for excavation with minimum reinforcement and minimum risk of catastrophic failure or seismic damage. It is estimated that roughly one-third of the United States is underlain by potentially suitable rock formations and these areas probably are included in the utility areas serving well over half of the population.

Selection #7 requires suitable aquifers. Sedimentary geology with potentially suitable groundwater layers underlies about half of the United States. Suitable regions are widely dispersed and probably occur within the utility areas serving over two-thirds of the population.

Other aspects of site flexibility are land requirements and aesthetic acceptability. The underground selections use little land and show little visible profile. Disposal of the muck from an excavated cavern poses an aesthetic problem or disposal problem, but often it is salable or can be used for other on-site construction. The PCIV and PCPV require large arrays of storage vessels. Location near populated centers might encounter aesthetic objections.

Operating Flexibility. Two factors affect operating flexibility most. The first of these is Power Swing. In the course of the study, discussions with several utilities indicated less interest in small peaking increments, such as 5, 10, or 15 percent of the baseload plant capacity, than in larger peaking increments such as 30 to 50 percent. On this basis, large power swing capabilities were emphasized over the limited swing available from feedwater storage.

On this criterion, Selections #1, #2, #5, and #8, small swing feedwater storage, would be somewhat downgraded compared to the other selections.

The second factor is Discharge Hours. Operating flexibility is also concerned with the number of hours of discharge at full capacity that is available. The energy-related component of cost is roughly proportional to the hours of discharge whereas the power related component is not. For this study, 6 hours discharge and 8 hours charge were selected as a uniform basis for comparison. Since the relative cost of the energy-related and power-related components differs for the selections, the ranking may be altered for a different design with more or fewer hours of discharge. This is illustrated in Figure 3-17.

The peaking power TOTAL investment cost in $/kW is plotted against the number of hours of discharge capacity built into a TES plant. The Y intercepts at zero hours represent power-related costs alone from column 4 of Table 3-13. At six hours the points are equal to the TOTAL costs in column 5. Some of the high-cost systems, such as PCPV and PCIV, cross over the oil/rock systems with higher power-related costs at about two hours discharge capability. Aquifer storage, not very attractive for short discharge designs, has a low slope and would cross all the other lines by 48 hours discharge requirement. It is thus most suitable for long-term or seasonal storage.

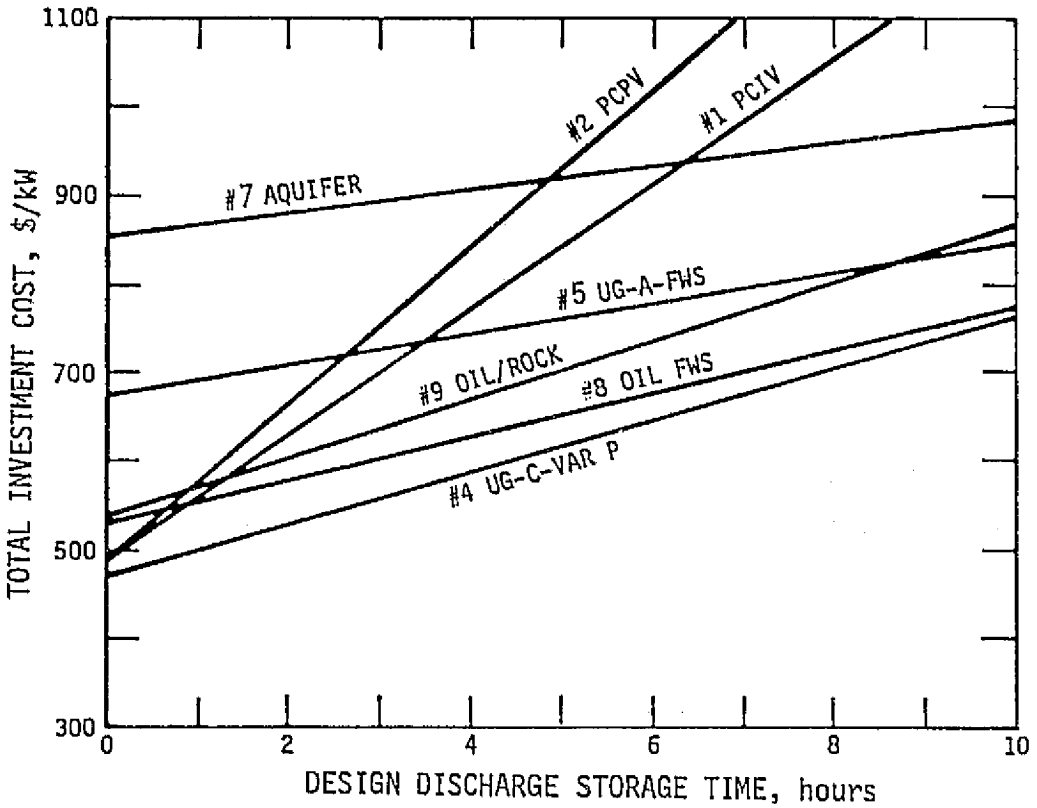

Figure 3-17. Comparison of Capital Cost of Selections from Different Discharge Cycles

Reliability. One of the objectives of the use of TES systems is to improve the boiler island outage rates by minimizing the output variations required of it. It has also been indicated that reliability could be improved (availability increased) if the peaking turbine can be operated from storage when the boiler island is shut down or from the boiler island steam source if the main turbine is shut down. Both appear feasible at some cost. In any case effects apply equally to all selections except the feedwater storage selections using an enlarged main turbine. Even the feedwater storage selections could use a separate peaking turbine representing the differential capacity that would have been added to the main plant. Turbine design would probably be more difficult and costs higher than shown in Table 3-13.

Reliability can of course be affected by forced outage rates, and the amount of scheduled maintenance required of the TES components. The higher modular construction incorporated in the various selections to use sizes that have least technical risk (e.g., 3 to 20 PCIV's; 16 oil/rock storage tanks; 5 to 35 parallel heat exchangers) should assure reliable operation providing isolation devices such as stop-valves and control features are adequately designed.

Maintenance in an underground cavity, while hopefully seldom needed, could require an outage of many weeks to many months while cavities are emptied and cooling is used to make manned access feasible. Molten salt systems cannot be shut down and allowed to cool below their freezing point without extensive work required to get them back in operation.

Operating Hazards. It can be expected that electric utilities would be reluctant to adopt a TES concept that potentially endangered the conventional plant components such as boiler or nuclear steam supply, main turbine generator, electrical and heat rejection systems. Such hazards would most likely occur at the interfaces of the TES system with the main power plant. Precautions must be taken that the quality of boiler feedwater, for example, is maintained at utility standards. Small leakages of foreign materials into it can cause corrosion and scale.

HTW storage systems will probably have lesser hazards from boiler feedwater contamination, but all parts of the storage systems, tanks, pipes and pumps must be cleaned and kept clean, and be of suitable corrosion resistant materials.

Avoiding risks to the boiler island in a conventional plant was one of the reasons for opting to eliminate the reheater from the high sulfur coal plant as was discussed earlier.

Diversity

Judgment must be used to assure that all selections recommended for further conceptual design are not simply variants of one concept. For

example, on the basis of the foregoing discussion, all recommendations should not be underground cavities, though three out of the top ranked five (Table 3-13) are UG cavity concepts. Nor should all be variants of LVP systems with oil as the heat transfer fluid. All should not be regionally limited by geology. Growth potential considerations, frequently mentioned in the preceding sections, should be considered so that selecting the most available does not foreclose future improvement in cost and performance.

Some judgments on the basis of diversity, bearing in mind the other criteria, are fairly easy. Because of geologic specificity, at most one selection should be underground. Since Selection #4, the UG cavity, concrete supported, variable pressure accumulator concept comes out best of all in economic ranking, it should be one of those selected, excluding Selections #5, #6, and #7.

The similarity in all system details except the pressure vessel of Selection #1, PCIV, and Selection #2, PCPV, suggests that at most one of them should be included. Present data favors somewhat the PCIV; if more detailed conceptual design indicates problem areas or major cost revisions, a conversion to the alternative pressure vessel can be made.

LVP systems are fairly similar in configuration, whether oil, molten salt, or another medium is used. All appear relatively unattractive if difficulties are found with the dual media concept of oil/rock/thermocline. At 25 percent or more volume fraction of fluid, oil (Selection #9) appears to rank higher than molten salt (Selection #11) in economics and availability. For drained-tank concepts or for cost reductions of salt through purity/compatibility studies, molten salt offers more promise. As these growth directions are not as near-term, Selection #9 must be preferred to #11.

Although feedwater storage systems are limited in peaking capacity, they are attractive in specific output as illustrated in the comparison

of Selections #8 and #9. Although diversity considerations would not indicate that oil/rock systems should be two out of three selections chosen, both could be considered in a group of four choices. If desired, one of these could emphasize oil and the other emphasize molten salt to inject an additional difference. In this case, oil is indicated for the feedwater storage because of the larger temperature swing used, which would extend below the freezing point for HITEC.

Environmental Acceptability

Environmental requirements on the main plant play a major role in site selection, so limit site flexibility. In addition to main plant constraints, unique features of the TES selections must be considered for their environmental acceptability. All of the aboveground selections require a large volume of tankage. Many tanks can be fairly low and comparable to other structures of the main plant. Of the various selections, the PCIV, Selection #1, probably has the greatest height and visibility, about 70 m, but not in excess of fossil plant stack heights.

Particularly noxious materials, in terms of odor and toxicity, have been avoided in the selections being considered. Sulfur and sulfuric acid, while potentially very low cost heat transfer fluids, may complicate site approvals by environmental objections.

Containment of the storage media in case of a catastrophic failure must be provided for in the case of oil and molten salt, but probably not for HTW. The danger from major release of hot oil is fire. The danger from the release of hot molten salt is less if the area around the tank is kept well cleared of oxidizable material.

Conservation Potential

Conservation objectives include the saving of energy, and especially the saving of depletable and imported fuels such as petroleum and natural gas. Thermal energy storage and other storage systems do not save energy in that the turnaround efficiency indicates less electric energy is being

produced from fuel than could be obtained from the baseload plant. Although load-following with a baseload plant will give a poorer heat rate at low load operation, it would in general average more efficient than a TES equipped plant.

When compared to the alternate peaking means, such as gas turbines which use distillate or low sulfur petroleum fuels, or to compressed air storage which uses some oil fuel during the discharge cycle (about one-third as much as the gas turbine), there is conservation potential in thermal energy storage.

If the TES charging cycle uses nuclear or low-cost coal as fuel and the peaking turbine output replaces gas turbine power output, oil is conserved. The amount and type of fuel replaced by TES operation is most accurately determined by an hour by hour simulation of the dispatch procedures used by electric utilities with a given mix of generating capacity types and a given pattern of daily, weekly, and annual demand variation. Simulations in various types of utilities are covered later in Section 5.

Cost of Electricity

Up to this point primary emphasis has been on capital costs. Another useful economic measure of storage components is the cost of electricity (COE). The method for determining COE was defined earlier. The COE for the same twelve selections listed in Table 3-13 is given in Table 3-14. In this comparison the fuel used for charging was assumed to be coal. The COE is very much a function of many more utility parameters than considered here. Some of these factors will be discussed later in the report when evaluating specific conceptual designs. These effects may change the COE but when applied only to the TES plants the rankings should not change.

Table 3-14

COST OF ELECTRICITY COMPARISONS

Selection Number	Short Title	COE, (Mills/kWh)
1	PCIV-FWS	130
2	PCPV-FWS	142
3	STEEL-FWS	213
4	UG-C-VARP	99
5	UG-A-FWS	114
6	UG-A-EVAP	101
7	AQUIFER	132
8	OIL-FWS	103
9	OIL/ROCK	109
10	OIL/SALT	180
11	SALT/ROCK	132
12	PCM	200

Because of the large dependence of COE on capital costs when the fuel costs are nearly the same (varying only because of differences in turnaround efficiency when the same fuel is used) the ranking by COE in Table 3-14 is the same as the economic ranking in Table 3-13.

Selected Options

Based on the considerations discussed in this section, including the need for diversity, the following four selections were approved by DOE/NASA/EPRI as the basis for more detailed investigations and conceptual designs.

- A dual media, sensible heat TES system integrated with a large coal fired power plant and supplying steam to a separate peaking system of optimum size.
- An underground high temperature water TES system integrated with a large coal fired power plant and supplying steam to a separate peaking system of optimum size.
- An aboveground high temperature water TES system integrated with a large pressurized water reactor power plant and utilizing stored feedwater in an optimum generating cycle.
- A dual media, sensible heat TES system integrated with a large pressurized water reactor power plant and utilizing feedwater heat storage in an optimum generating cycle.

REFERENCES FOR SECTION 3

1. Hausz, W.; Berkowitz, B.J., and Hare, R.C.; "Conceptual Design of Thermal Energy Storage Systems for Near-Term Electric Utility Applications"; Volume 1, Screening of Concepts; Volume 2, Appendices-Screening of Concepts; DOE/NASA/0012-78/1, EPRI RP1082-1, NASA CR-159411, GE78TMP-60, October 1978 and EPRI EM-1037.

2. Gilli, P.V., Beckman, G., and Schilling, F.E.; "Thermal Energy Storage Using Prestressed Cast Iron Vessels (PCIV), Final Report COO-2886-2; Prepared for ERDA; Institute of Thermal Power and Nuclear Engineering, Graz University of Technology, Graz, Austria, June 1977.

3. Awaya, Henry I.; Written description of the Steel Square Slab Thermal Storage Concept, Jet Propulsion Laboratory, California Institute of Technology, Pasadena, California, February 13, 1978.

4. Dooley, James L., et al; "A Feasibility Study of Underground Energy Storage Using High-Pressure, High-Temperature Water"; RDA-TR-7100-001, R&D Associates, Marina del Rey, California, January 1977.

5. Barnstaple, A.G., Kirby, J.J., and Wilson, J.E.; "Underground Thermal Energy Storage"; Final Draft Report, Ontario Hydro, Toronto, Ontario, Canada, December 1976.

6. Barnstaple, A.G., Kirby, J.J., and Wilson, J.E.; "Underground Thermal Energy Storage," Report 77113, Ontario Hydro, Energy & Environmental Studies Department, Tornoto, Ontario, Canada, July 1977.

7. Meyer, Charles F., Hausz, W., et al; "Role of the Heat Storage Well in Future U.S. Energy Systems"; GE76TMP-27; Technical Completion Report prepared for the Office of Water Research and Technology, U.S. Department of the Interior; General Electric Co.-TEMPO, Santa Barbara, California, December 1976, 186 pp.

8. Bechtel Corporation; "Retrofitted Feedwater Heat Storage for Steam Electric Power Stations Peaking Power Engineering Study"; CONS/2863-1; Final Report prepared for ERDA; Bechtel Corporation, Research and Engineering, San Francisco, California, October 1976.

9. Nicholson, Edward W., and Cahn, Robert P.; "Storage in Oil of Off-Peak Thermal Energy from Large Power Stations"; Proceedings, Eleventh Intersociety Energy Conversion Engineering Conference, Paper 769105, State Line, Nevada, September 12-17, 1976, pp 598-605.

10. Hallet, Raymon W., Jr., and Gervais, Robert L.; "Central Receiver Solar Thermal Power Station, Phase 1; CDRL Item 2: Pilot Plant Design Report; Volume V: Thermal Storage Subsystem"; Report MDC G-6776 (Vol. 5); prepared for the U.S. Department of Energy; McDonnel-Douglas Astronautics Company-West, Huntington Beach, California, November 1977.

11. Martin Marietta Corporation, et al; "Central Receiver Solar Thermal Power System, Phase 1, Volume V: Thermal Storage Subsystem"; Preliminary Design Report (Draft) SAN-1110-77-2, MCR-77-156, Denver, Colorado, April 1977.

12. Honeywell, Inc.; "Solar Pilot Plant, Phase I - Detailed Design Report: Thermal Storage Subsystem Research Experiment, CDRL Item No. 8"; Report F3419-DR-204, Systems and Research Center, Minneapolis, Minnesota, June 22, 1976.

13. Ferrara, Angelo, et al; "Thermal Energy Storage Heat Exchanger (Molten Salt Heat Exchanger Design for Utility Power plants)"; Report NASA CR 135244; Prepared for NASA-Lewis Research Center; Grumman Aerospace Corporation, Bethpage, New York, October 1977.

14. Taub, M.; "A Duplex Chemical System for the Storage and Container Transport of Heat for District Heating"; Nuclear Technology, April 1978, 7 pp.

15. United Engineers & Constructors, Inc.; "Capital Cost: Low and High Sulfur Coal Plants -- 800 MWe"; Volume 3, NUREG-0244, COO-2477-8, Philadelphia, Pennsylvania, June 1977.

16. United Engineers & Constructors, Inc.; "Capital Cost: Pressurized Water Reactor Plant"; Volumes 1 and 2, NUREG-0241, COO-2477-5, Philadelphia, Pennsylvania, June 1977.

17. Electric Power Research Institute (EPRI); "Technical Assessment Guide"; EPRI PS-866-SR, Technical Assessment Group, Palo Alto, California, June 1978.

18. Glendenning, I.; "Long Term Prospects for Compressed Air Energy Storage"; presented at a joint ERDA/EPRI Workshop, December 1975; Central Electricity Generating Board, Marchwood Engineering Laboratories, Southhampton, England, 1975.

19. Glendenning, I., and Grant, R.; "RP1083-1 ACAS Study - Report on Initial Cycle Analyses for Subtasks I, (1) and II, (1)"; Central Electricity Generating Board, Marchwood Engineering Laboratories, Southhampton, England, 1977.

20. Meyer, Charles F., Todd, David K, and Hare, Robert C; "Thermal Storage for Eco-Energy Utilities"; GE72TMP-56, General Electric Co. TEMPO, Santa Barbara, California, December 1972.

21. Guthrie, Kenneth M.; "Process Plant Estimating Evaluation and Control"; Craftsman Book Company of American, Solana Beach, California, 1974.

22. United Engineers & Constructors, Inc., "Capital Cost: High and Low Sulfur Coal Plants -- 1200 MWe"; Volumes 1, 2 and 3, NUREG-0243, COO-2477-7, Philadelphia, Pennsylvania, June 1977.

23. United Engineers & Constructors, Inc.; "Capital Cost: Low and High Sulfur Coal Plants -- 800 MWe"; Volumes 1, 2 and 3, NUREG-0244, COO-2477-8, Philadelphia, Pennsylvania, June 1977.

Section 4

CONCEPTUAL SYSTEM DESIGN

OBJECTIVE

The objectives of Task II are to develop conceptual system designs of four selected TES systems and determine capital cost and annualized operating costs. The four TES systems under study in Task II are defined in Section 3. In addition, the performance and costs of cycling coal fired plants are to be determined for comparison with the TES systems.

SCOPE OF WORK

The scope of work includes preparation of base plant design definition; performing cycle analysis, sensitivity analysis/optimization; preparing plant cycle diagrams and conceptual drawings; preparing system design descriptions; and performing economic analyses in terms of plant capital cost estimates, TES system capital cost, levelized annual energy cost and levelized busbar energy cost.

BASE POWER PLANTS DESIGN DEFINITION

The Task I input, Reference 4-1, into Task II indicated that the major additions to electric generation capacity during the period 1985-2000 are expected to be a mix of LWR nuclear plants and coal fired plants with flue gas desulfurization (FGD). Utility planned purchases of LWR plants are in the range of 1000-1500 MW capacity. Planned coal fired plants range up to 1200 MW, but most units planned by large utilities are in the 600-800 MW range. The Task I recommendations, Reference 4-1, into Task II were to use a High Sulfur Coal (HSC) plant in the approximate 800 MW range with supercritical steam conditions and a LWR nuclear plant in the 1140 MW range with subcritical steam conditions for integration with the thermal energy storage system.

HSC Plant with Reheat

The commonly accepted reference HSC plant in the 800 MW capacity with supercritical steam conditions and with reheat is the one as documented in NUREG-0244, Volume 3, produced by United Engineers and Constructors, Reference 4-2. Figure 4-1 shows the cycle diagram of this plant with heat and mass balance numbers.

HSC Plant with Nonreheat

It is required to integrate a TES system which is capable of providing a large power swing, around 50%, with the above reference HSC plant. The source of storage as recommended in Task I is the cold reheat steam. The recommended modification to be made in the above referenced HSC plant without handicapping the near-term availability of the plant is to eliminate the reheater so that cold reheat steam can be used for storage. Operating the boiler as designed in the above reference plant with a reheater, if integrated with TES system and thus having variable flow ratio between superheater and reheater, can cause serious problems of excess reheater tube temperature and increased forced outages.

At present, boilers with variable reheat flows do not exist. Such designs are not considered near-term. Moreover, the baseline steam turbine with such a reheat boiler would require a multi-admission turbine. Such multi-admission steam turbines require a complicated control system and are more expensive than the baseline steam turbines for conventional coal fired plants.

Moreover, even if a reheat boiler could be designed and operated with variable flow ratio so that cold reheat steam could be withdrawn for storage, the steam could not be reheated during peak power (without adding very complicated boiler capacity) so that a reheat boiler would not increase peaking turbine power or reduce its cost. For these reasons the above referenced HSC plant with reheat was modified for a nonreheat steam cycle.

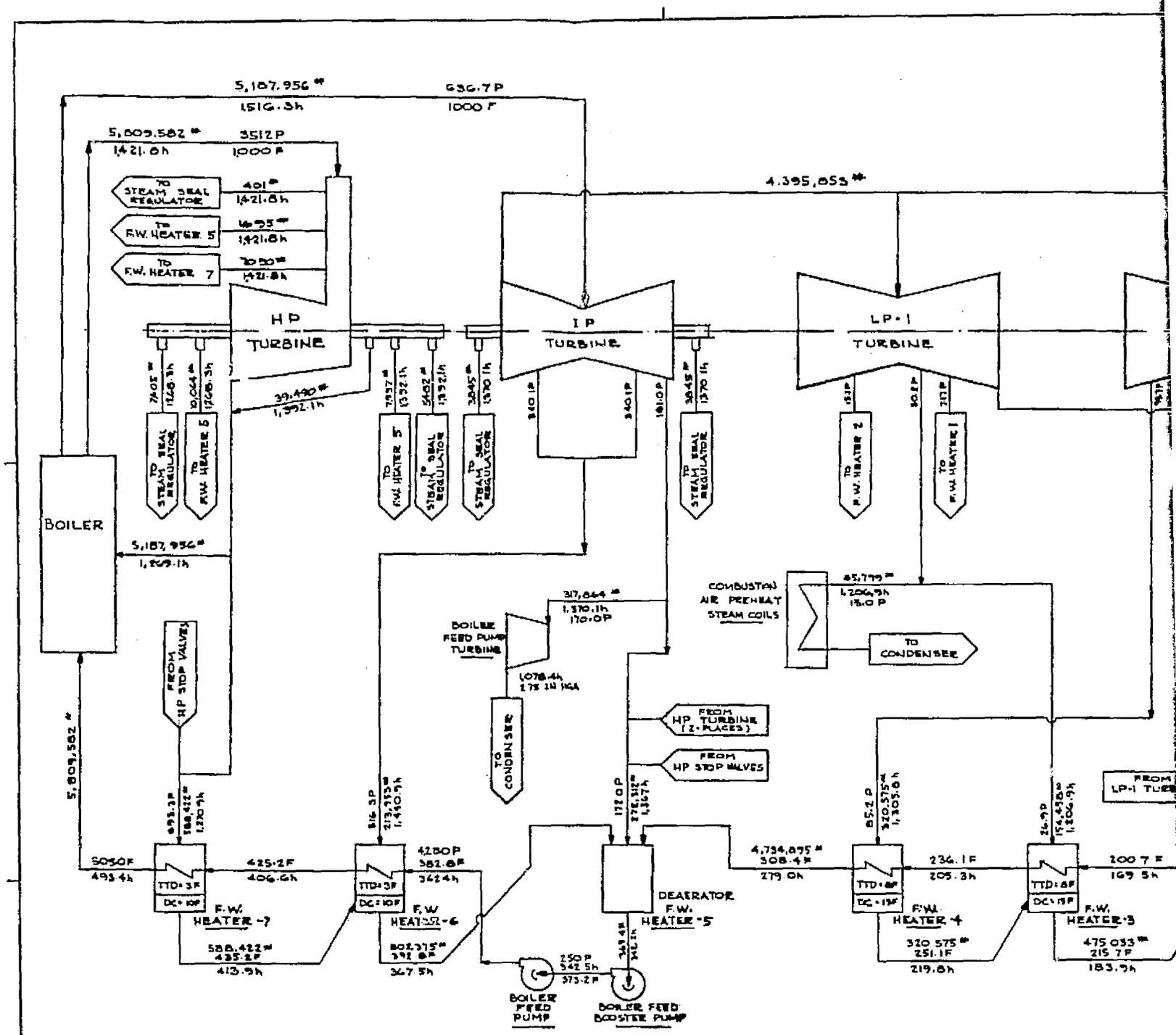

LEGEND

P - PRESSURE - PSIA
F - TEMPERATURE - DEGREES FAHRENHEIT
h - ENTHALPY - BTU/LB
- FLOW - LB/HR
% - PERCENT MOISTURE

PERFORMANCE DATA:

• TOTAL TURBINE OUTPUT	868,867	KW
• FIXED LOSSES	2,779	KW
• GENERATOR LOSSES	11,373	KW
• GENERATOR OUTPUT	854,715	KW
• AUXILIARY POWER	60,300	KW
• NET POWER TO TRANSFORMER	794,415	KW
• NET STATION STEAM RATE	7.31	#/KW
• NET STATION HEAT RATE	9,482	BTU/KW-HR
• THERMAL EFFICIENCY	35.97	%

FOLDOUT FRAME

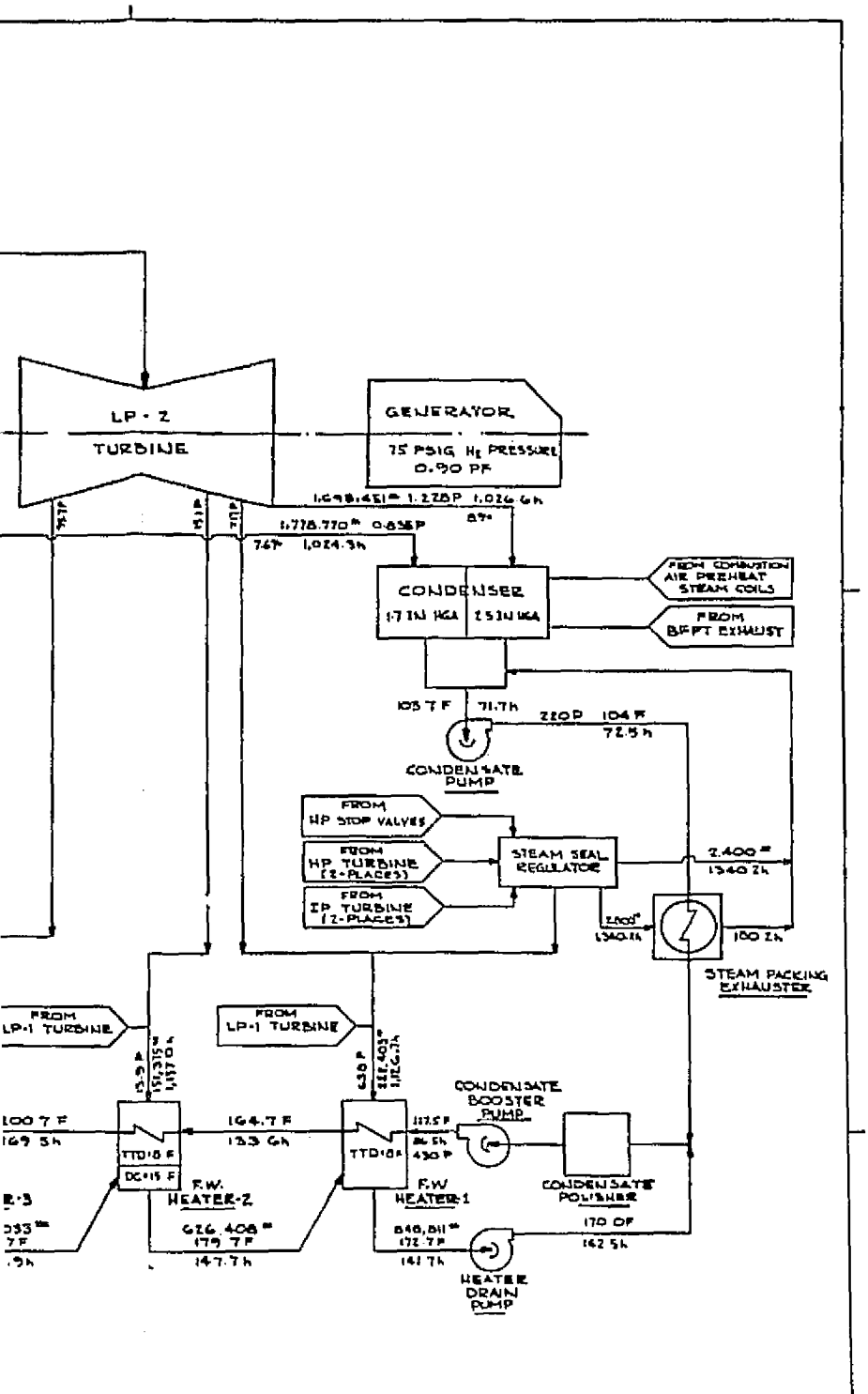

Figure 4-1. Cycle Schematic of HSC Plant with Reheat (NUREG Plant)

STEAM HEAT BALANCE DIAGRAM (MAX GUARANTEE)
794 MWe FOSSIL PLANT
MIDDLETOWN HYPOTHECIAL SITE
United engineers
6509 002-HSC-6

FOLDOUT FRAME 2

Figure 4-2 shows the cycle schematic with heat and mass balance numbers of the nonreheat plant. Table 4-1 provides the performance comparison of this plant with the above mentioned NUREG-0244 plant with reheat. Eliminating the reheat increases the steam rate per unit output by 27.7% and the net station heat rate by 3.2%.

Table 4-1

PERFORMANCE COMPARISON
(Reheat Plant Vs. Nonreheat Plant)

Description	NUREG-0244 HSC Plant With Reheat	Nonreheat HSC Base Plant
• Main Steam Conditions		
Flow Rate, 10^6kg/hr (10^6lb/hr)	2.64 (5.81)	3.14 (6.93)
Pressure, MPa (psia)	24.21 (3512)	24.24 (3515)
Temperature, °C (°F)	538 (1000)	538 (1000)
• Reheat Steam Conditions		
Flow Rate, 10^6kg/hr (10^6lb/hr)	2.35 (5.19)	
Pressure, MPa (psia)	4.39 (636.7)	No Reheat
Temperature, °C (°F)	538 (1000)	
• Type of Turbine	TC4F, 33.5" LSB 3600 rpm	CC4F - 38" LSB 3600/1800 rpm
• Generator(s) Output	854,715 kW @ 1.75/2.5" HG	468,584 kW @ 3600 rpm 331,416 kW @ 1800 rpm 800,000 kW @ 3" HG
• Auxiliary Power	60,300 kW	58,367 kW
• Net Power to Transformer	794,415 kW	741,633 kW
• Net Station Steam Rate, kg/kWh (lb/kWh)	3.32 (7.31)	4.24 (9.34)
• *Net Station Heat Rate, $\frac{\text{J-Thermal}}{\text{J-Electric}}$ $\left(\frac{\text{Btu}}{\text{kWh}}\right)$	2.78 (9482)	2.87 (9789)
• Thermal Efficiency, %	36.0	34.89

* Boiler Efficiency = 88.63%

RECEDING PAGE BLANK NOT FILMED

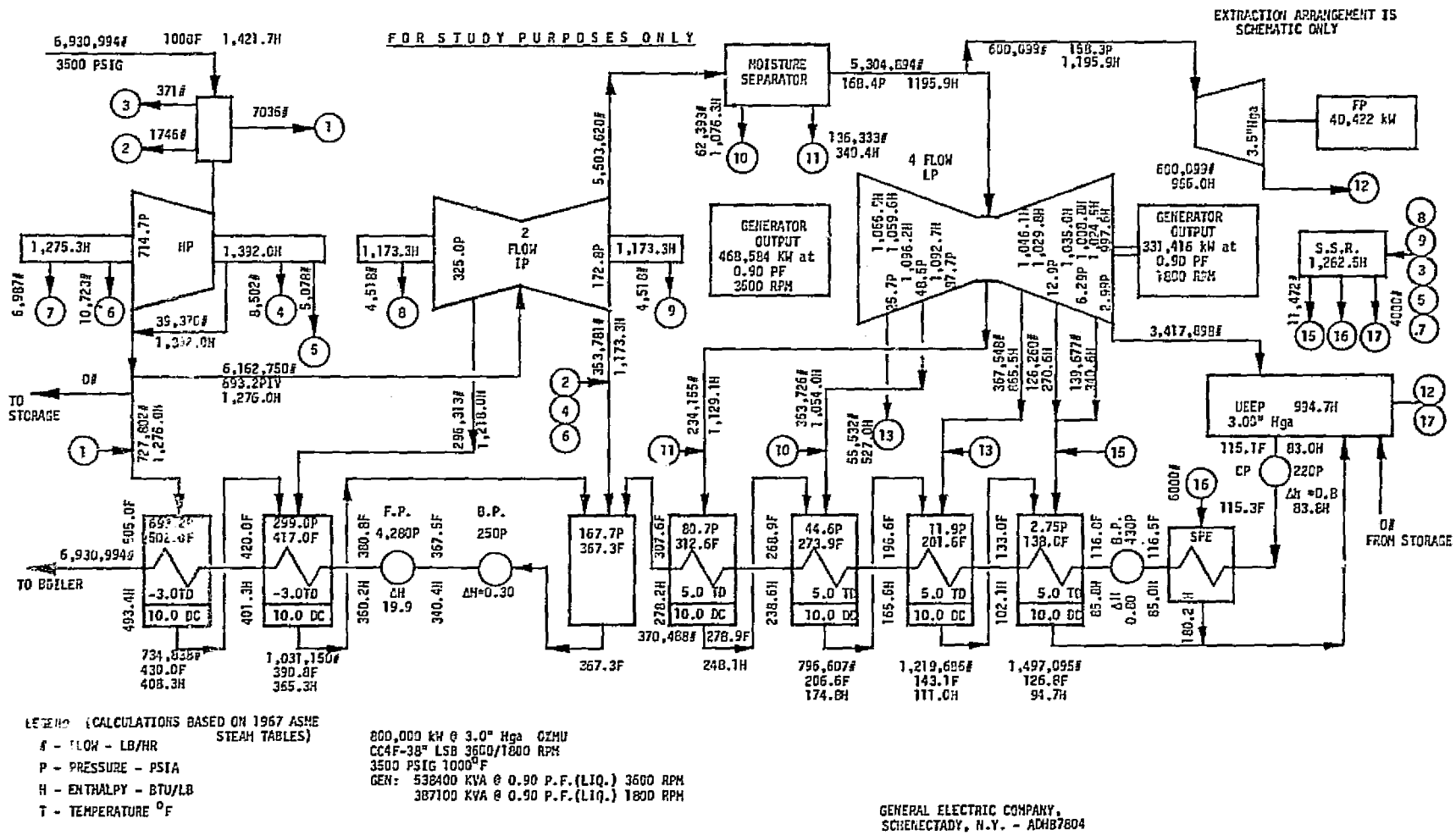

Figure 4-2. HSC Nonreheat Base Plant

NUREG Nuclear LWR Plant

The commonly accepted reference nuclear LWR plant in the 1140 MW capacity with subcritical steam conditions is the one documented by NUREG-0241, Volumes 1 and 2, produced by United Engineers and Constructors, Reference 4-3. Figure 4-3 shows the cycle schematic of this plant with heat and mass balance numbers.

Nuclear LWR Base Plant

A nuclear LWR base plant as integrated with the thermal energy storage system having approximate normal operating parameters as given in the above NUREG-0241 plant, has a cycle schematic as shown in Figure 4-4. The performance comparison of this base plant with the NUREG-0241 plant is shown in Table 4-2.

Table 4-2

PERFORMANCE COMPARISON
(NUREG Nuclear Plant Vs. Nuclear Base Plant)

Description	NUREG-0241 Nuclear LWR Plant	Nuclear LWR Base Plant
• Steam Conditions from Reactor		
Flow Rate, 10^6 kg/hr (10^6 lb/hr)	6.87 (15.14)	6.61 (14.58)
Pressure, MPa (psia)	6.72 (975)	6.72 (975)
Enthalpy, kJ/kg (Btu/lb)	2771 (1191.3)	2771 (1191.3)
• Type of Turbine	TC6F, 43" LSB, 1800 rpm	TC6F, 43" LSB 1800 rpm
• Main Generator Output	1,192,400 kW @ 2.5" HG	1,124,567 kW @ 3" HG
• Auxiliary Power	53,790 kW	51,994 kW
• Net Power to Transformer	1,138,610 kW	1,072,573 kW
• Net Station Steam Rate, kg/kWh (lb/kWh)	13.3 (24.32)	13.60 (29.98)
• Net Station Heat Rate, $\frac{\text{J-Thermal}}{\text{J-Electric}} \left(\frac{\text{Btu}}{\text{kWh}}\right)$	3.0 (10,224)	3.08 (10,489)
• Thermal Efficiency, %	33.4	32.56

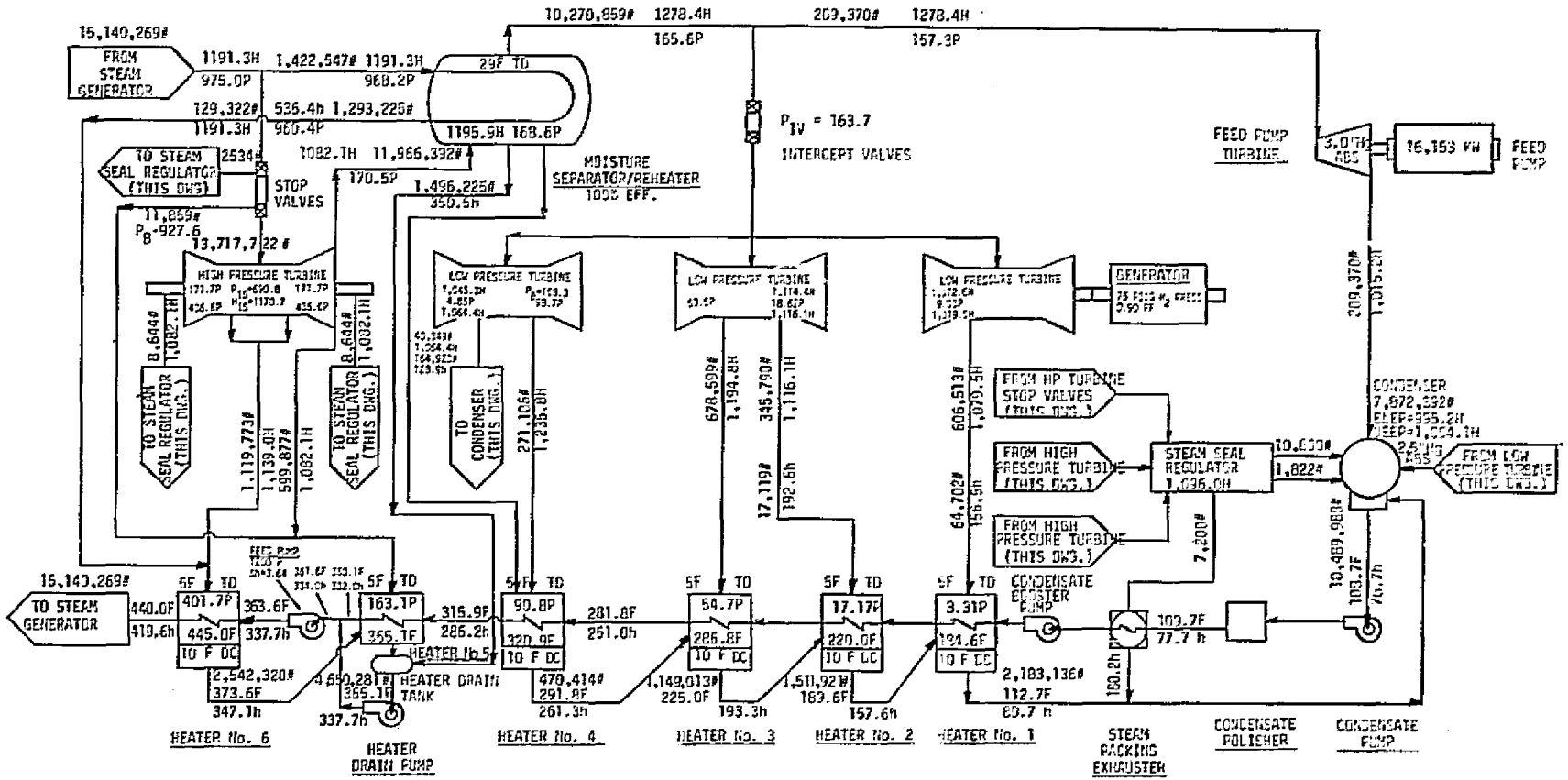

LEGEND:

H,h - ENTHALPY - BTU/POUND
- FLOW - POUND/HOUR
P - PRESSURE - PSIA
F - TEMPERATURE °F

PERFORMANCE:

TOTAL TURBINE OUTPUT	1,211,682 kW
FIXED LOSSES	5,396 kW
GENERATOR LOSSES	13,886 kW
GENERATOR OUTPUT	1,192,400 kW
AUXILIARY POWER	53,790 kW
NET POWER TO TRANSFORMER	1,138,610 kW
NET STATION STEAM RATE	13.3#/kW
NET STATION HEAT RATE	10,224 BTU/kW-Hr
THERMAL EFFICIENCY	33.38%

NOTE: Redrawn from United Engineers Drawing 6509.003-P-6 (Reference 4-3) STEAM HEAT BALANCE DIAGRAM 1138MW_e PWR PLANT

Middletown Hypothetical Site

Figure 4-3. Cycle Schematic of NUREG Nuclear LWR Plant

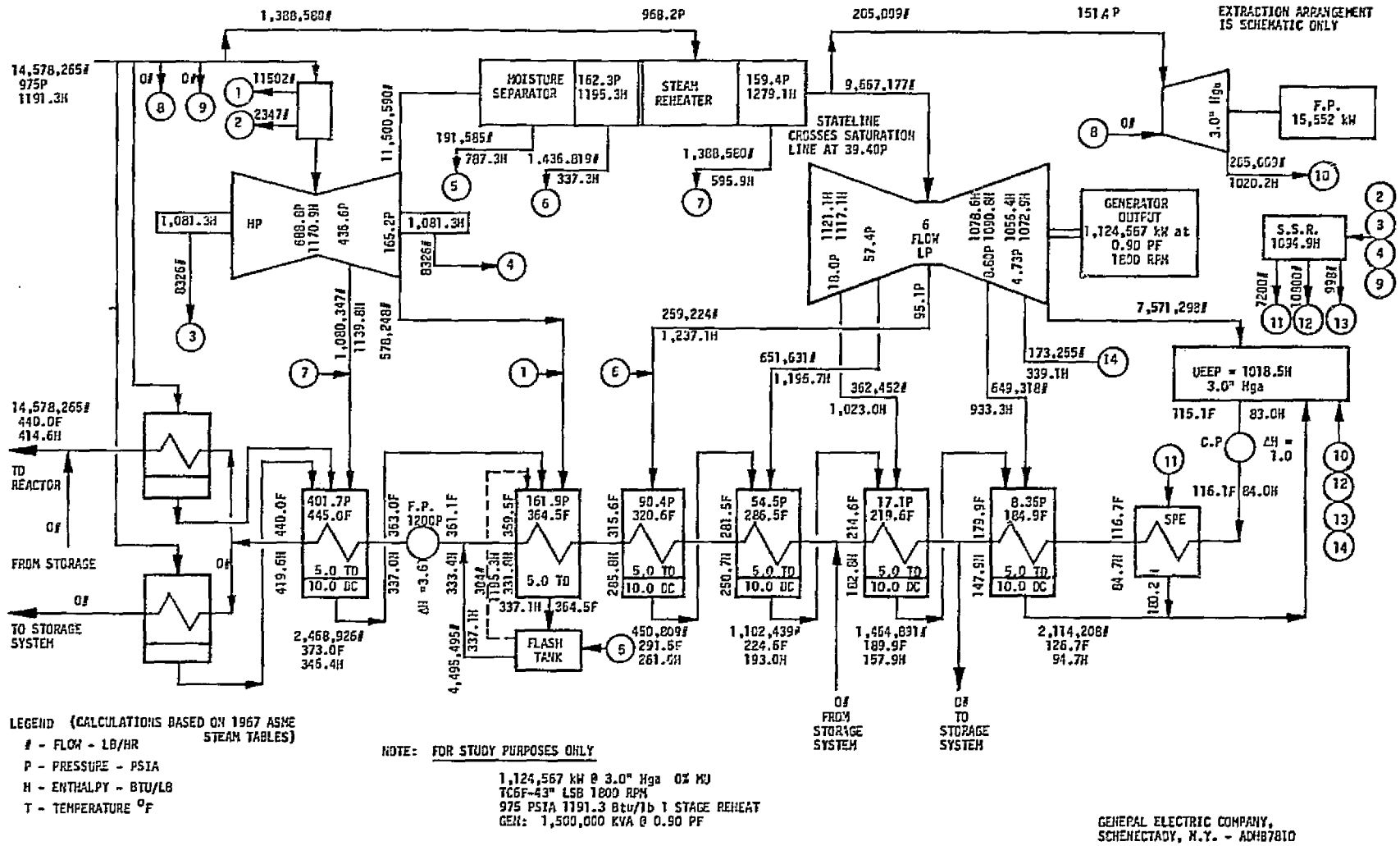

Figure 4-4. Nuclear LWR Base Plant

Cycling Coal Fired Plants

An alternative to thermal energy storage for supplying peaking power is the cycling coal fired plant. It is necessary to define cycling coal fired plants for making performance and economic evaluations with the power plants which are integrated with the thermal energy storage systems. Two plants were selected for this evaluation. The first is designed for minimum cost, having a low steam pressure and three feedwater heaters. The second is designed for a higher efficiency with somewhat higher cost, having a higher steam pressure and seven feedwater heaters.

The reference cycle schematics with heat and mass balance numbers for the cycling coal plants have steam conditions of 12.41 MPa/510°F with 510°C reheat temperature (1800 psig/950°F/950°F) and 16.55 MPa/538°C/538°C (2400 psig/1000°F/1000°F) and are shown in Figures 4-5 and 4-6, respectively.

The performance comparison of these two cycling coal fired plants is given in Table 4-3. Both plants were designed for 550,000 kW generator output which resulted in 511,500 kW net plant output. The higher pressure plant with more feedwater heaters had a 7.2% higher steam rate but a 7.3% lower heat rate.

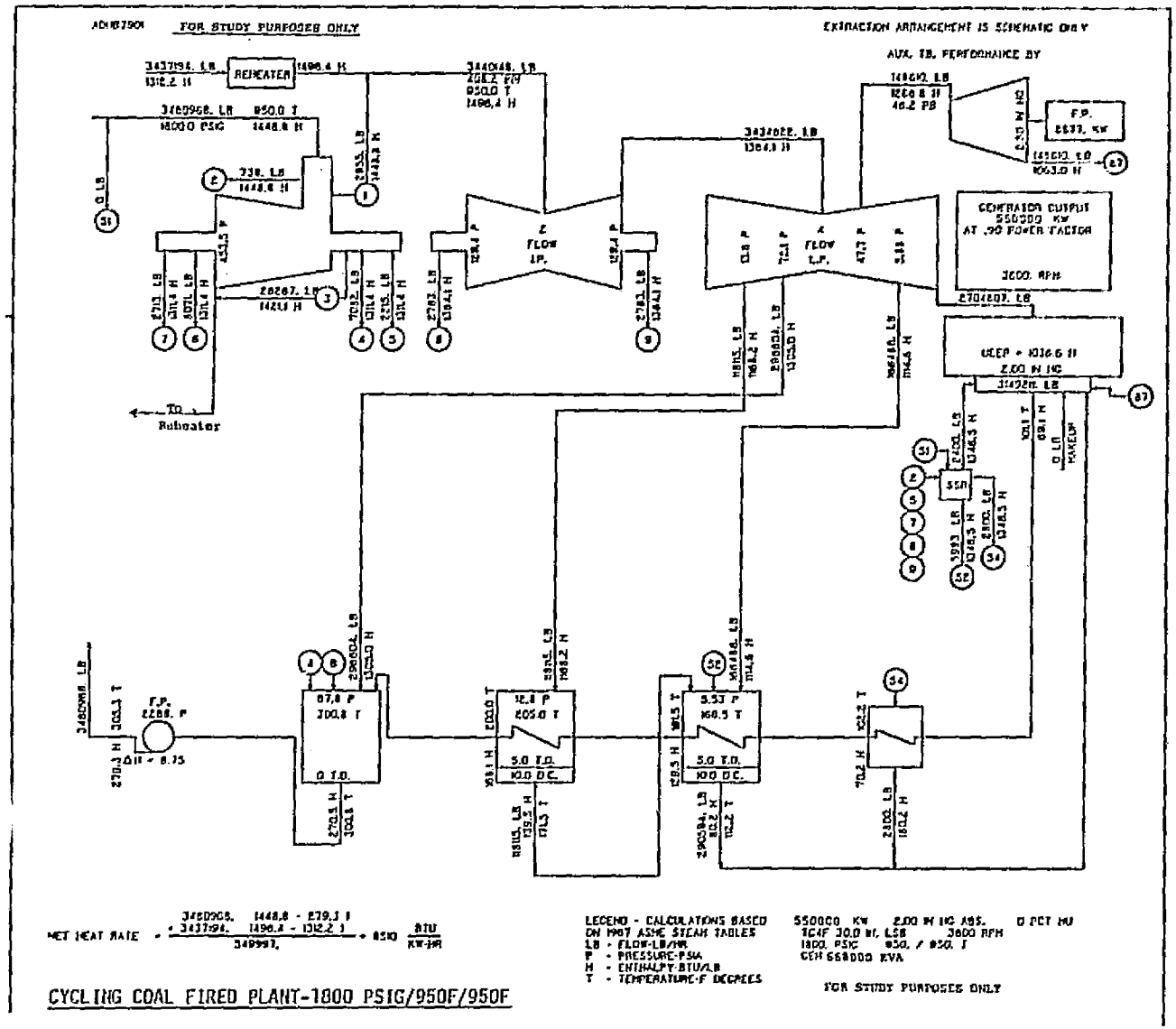

Figure 4-5. Cycle Schematic of Cycling Coal Fired Plant - 12.41 MPa/510°C/510°C (1800 psig/950°F/950°F)

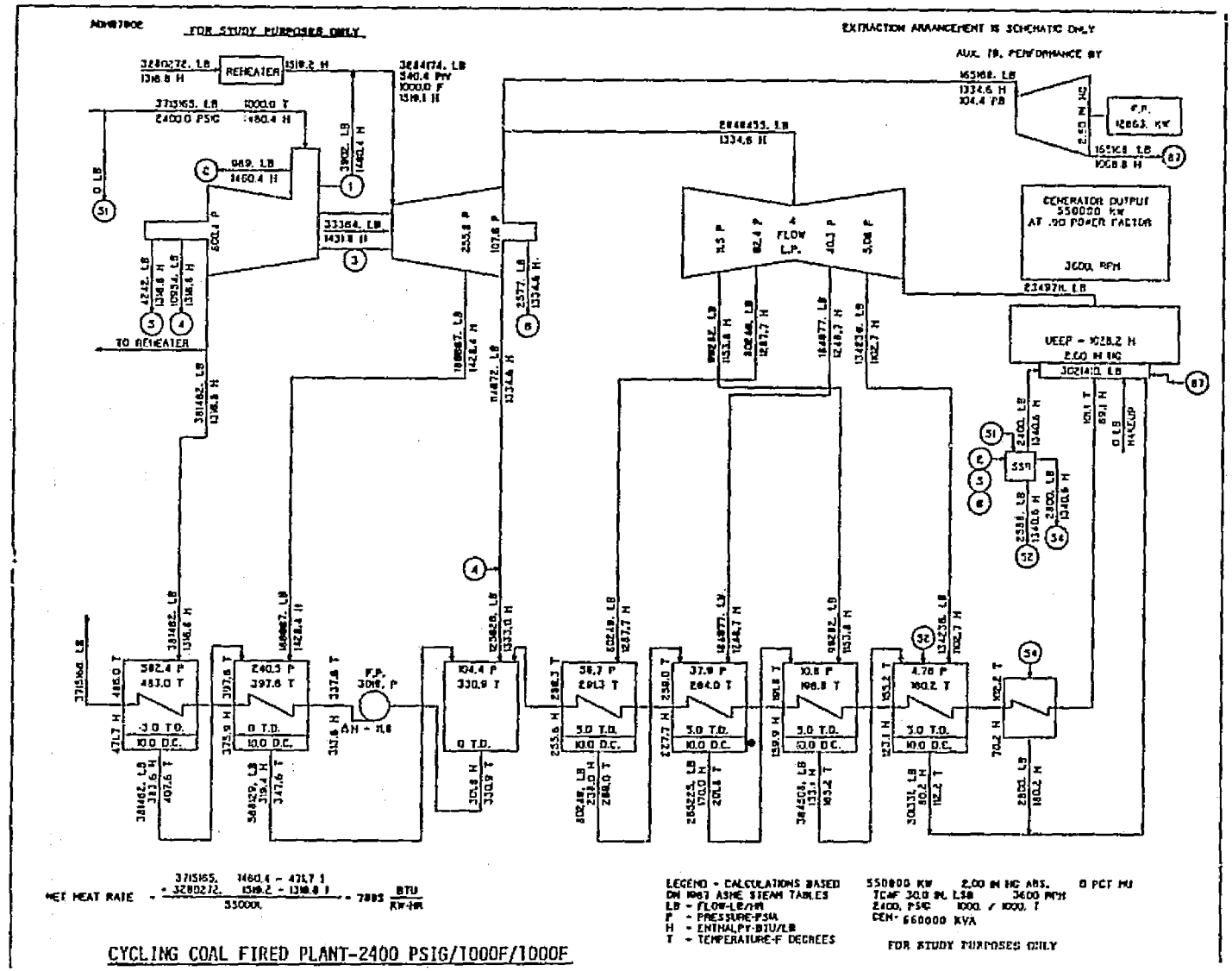

Figure 4-6. Cycle Schematic of Cycling Coal Fired Plant - 16.55 MPa/538°C/538°C (2400 psig/1000°F/1000°F)

Table 4-3

PERFORMANCE COMPARISON
(Cycling Coal Fired Plants)

Description	Cycling Coal Fired Plant 12.4 MPa/510°C/510°C (1800 psig/950°F/950°F)	Cycling Coal Fired Plant 16.55 MPa/538°C/538°C (2400 psig/1000°F/1000°F)
• Main Steam Conditions		
Flow Rate, 10^6kg/hr (10^6lb/hr)	1.57 (3.46)	1.68 (3.72)
Pressure, MPa (psia)	12.51 (1815)	16.65 (2415)
Temperature, °C (°F)	510 (950)	538 (1000)
• Reheat Steam Conditions		
Flow Rate, 10^6kg/hr (10^6lb/hr)	1.56 (3.44)	1.49 (3.28)
Pressure, MPa (psia)	2.81 (408.2)	3.73 (540.4)
Temperature, °C (°F)	510 (950)	538 (1000)
• Type of Turbine	TC4F, 30.0" LSB, 3600 rpm	TC4F, 30.0" LSB, 3600 rpm
• Generator(s) Output	550,000 kW @ 2.0" HG	550,000 kW @ 2.0" HG
• Auxiliary Power (7%)	38,500 kW	38,500 kW
• Net Power to Transformer	511,500 kW	511,500 kW
• Net Station Steam Rate, kg/kWh (lb/kWh)	3.07 (6.77)	3.29 (7.26)
• *Net Station Heat Rate, $\frac{\text{J-Thermal}}{\text{J-Electric}}$ $\left(\frac{\text{Btu}}{\text{kWh}}\right)$	3.03 (10,324)	2.80 (9566)
• Thermal Efficiency, %	33.08	35.70

* Boiler Efficiency = 88.63%

TES POWER PLANT CONCEPTUAL DESIGNS

The group of conceptual design drawings for each of the TES power plants are comprised of heat and mass balance diagrams for base cycle, charging cycle and discharging cycle; TES system flow diagrams for charging and discharging operation; a main steam flow diagram; an electrical one line diagram; a plot plan; an equipment arrangement drawing and an artist sketch. The designs presented herein are based on cycle analysis, sensitivity analysis/optimization with major TES system/component description, and sizing.

Plant #1 - HSC Plant with Aboveground Oil/Rock Thermal Storage

An artist rendering of this Plant #1 is shown in Figure 4-7, the performance is given in Table 4-4, and the approximate auxiliary losses breakdown in Table 4-5. This plant has a separate peaking steam turbine and thus has a large ratio of peak to minimum power. The plant has a nonreheat steam cycle. The percentage swing is -56.89% during charging operation and +49.92% during discharging operation. The TES turnaround efficiency defined as electric energy output from storage during discharging operation to electric energy lost for charging the storage during charging is 0.66 based on net power output and 0.69 based on gross power output.

The plant conceptual design drawings are illustrated in Figures 4-8 through 4-10 for heat and mass balance diagrams for base cycle, charging cycle and discharging cycle respectively; Figures 4-11 and 4-12 for TES system flow diagrams for charging and discharging operation; Figure 4-13 for main steam flow diagram; Figure 4-14 for electrical one line diagram; Figures 4-15 and 4-16 for plot plan and equipment arrangement. Figure 4-17 illustrates the electrical one line diagram of the 800 MW HSC base plant without thermal storage as defined under "Base Power Plants Design Definition" (page 4-1).

(Text continued on Page 4-39)

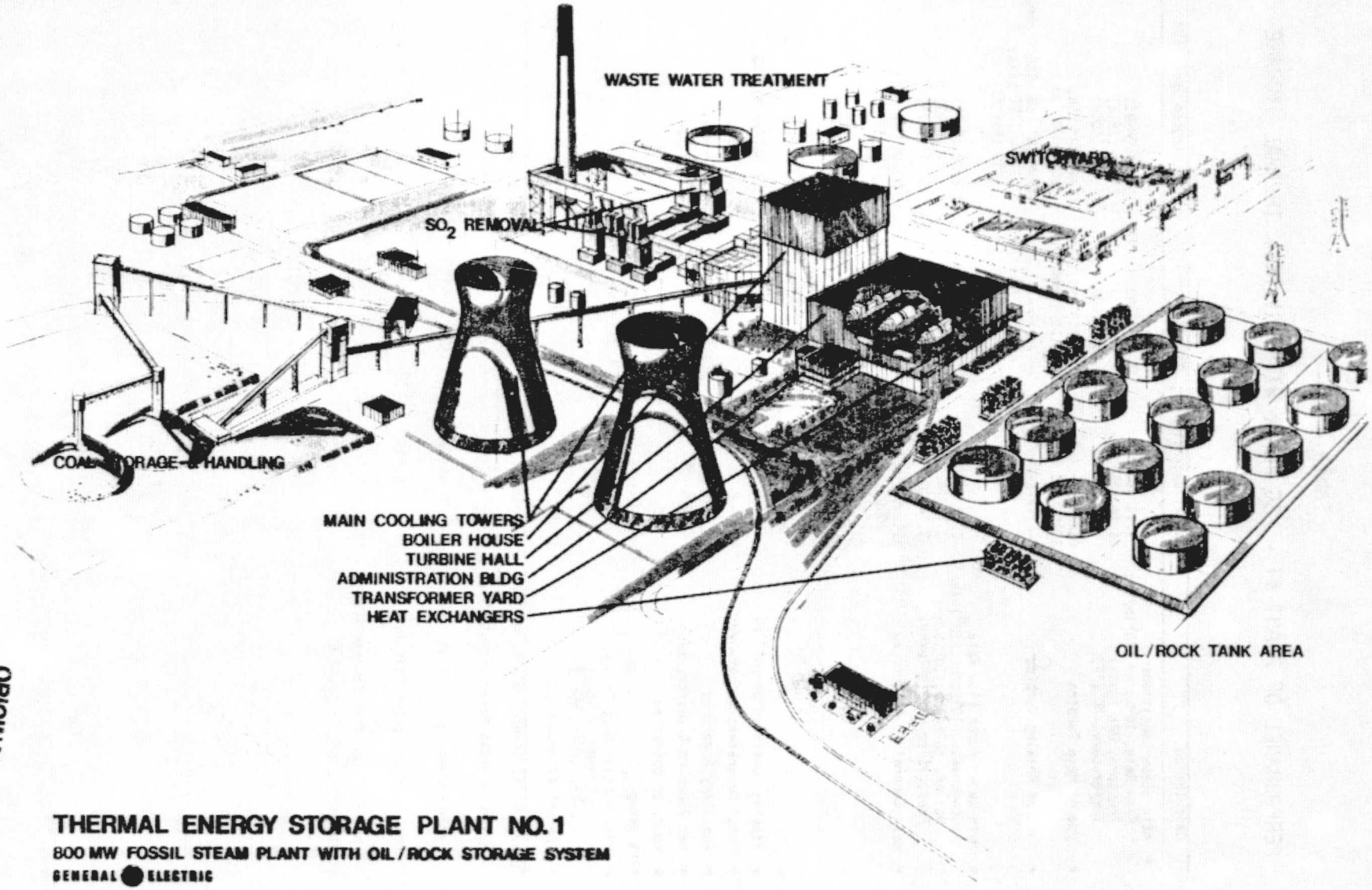

Figure 4-7. Artist Rendering of TES Plant #1

ORIGINAL PAGE IS OF POOR QUALITY

Table 4-4

PERFORMANCE OF PLANT #1 - HSC PLANT WITH OIL/ROCK THERMAL STORAGE

Description	Normal Operation	Charging Operation	Discharging Operation
• Main Steam Conditions			
Flow Rate, 10^6kg/hr (10^6lb/hr)	3.14 (6.93)	3.14 (6.93)	3.14 (6.93)
Pressure, MPa (psia)	24.24 (3515)	24.24 (3515)	24.24 (3515)
Temperature, °C (°F)	538 (1000)	538 (1000)	538 (1000)
• Type of Main Turbine	CC4F-38" LSB, 3600/1800 rpm	CC4F-38" LSB, 3600/1800 rpm	CC4F-38" LSB, 3600/1800 rpm
• Type of Peaking Turbine	----------	----------	TC4F-38" LSB, 18000 rpm, 2.01MPa (292 psia) 252°C (485°F)
• Main Water Pumps Flow Rate			
Condensate, 10^6kg/hr (10^6lb/hr)	2.52 (5.55)	0.82 (1.81)	2.52 (5.55)
Boiler, 10^6kg/hr (10^6lb/hr)	3.14 (6.93)	3.14 (6.93)	3.14 (6.93)
Feed, 10^6kg/hr (10^6lb/hr)	3.14 (6.93	3.14 (6.93)	3.14 (6.93)
• Main Generators Output, kW	468,584 kW @ 3600 rpm 331,416 kW @1800 rpm 800,000 kW @3" HG 809,006 kW @ 2-1/2" HG	308,087 kW @3600 rpm 71,783 kW @1800 rpm 379,870 kW @2" HG 387,253 kW @ 1-1/2" HG	468,584 kW @ 3600 rpm 331,416 kW @ 1800 rpm 800,000 kW @ 3" HG
• Peaking Generator Output, kW	----------	----------	397,341 kW @3" HG
• Total Generators Output, kW	809,006	387,253	1,197,341
• Auxiliary Power, kW	58,367	63,660	72,009
• Net Power to Transfer, kW	750,639	323,593	1,125,332
• Hours of Operation	10	8	6
• % Swing	----------	-56.89	+ 49.92
• *Net Station Heat Rate, $\frac{\text{J-Thermal}}{\text{J-Electric}} \left(\frac{\text{Btu}}{\text{kWh}}\right)$	2.84 (9,671)	6.60 (22,497)	1.89 (6,451)
• Thermal Efficiency, %	35.31	15.18	52.94

Turnaround Efficiency of Thermal Energy Storage:

Based on Gross Power Output $= \frac{6\ (1,197,341 - 809,006)}{8\ (809,006 - 387,253)} = 0.691$

Based on Net Power Output $= \frac{6\ (1,125,332 - 750,639)}{8\ (809,006 - 323,593)} = 0.658$

Thermal Storage System Heat Rate $= \frac{9,671.17}{0.658} = 14,697 \ \frac{\text{Btu}}{\text{kWh}}$

Thermal Efficiency of Storage System - 23.24%

*Boiler Efficiency = 88.63 %

Table 4-5

APPROXIMATE AUXILIARY LOSSES BREAKDOWN OF PLANT #1 - HSC PLANT WITH OIL/ROCK

Description	Losses in Horsepower		
	Normal Operation	Charging Operation	Discharging Operation
Induced Draft Fans	14,000	14,000	14,000
Forced Draft Fans	8,000	8,000	8,000
Circulating Water Pumps	12,000	12,000	12,000
Primary Air Fans	6,000	6,000	6,000
Soot Blowing Air Compressors	5,000	5,000	5,000
Auxiliary Circulating Water Pumps	800	800	800
Vacuum Pumps	400	400	400
Ash sluice pumps	400	400	400
Cool Conveyors	2,800	2,800	2,800
SO_2 Booster Fans	8,750	8,750	8,750
Coal Pulverizers	4,900	4,900	4,900
Condensate Booster Pumps	3,000	1,000	3,000
Condensate Pumps	1,050	350	1,050
Slurry Pumps	4,500	4,500	4,500
Quencher Pumps	2,250	2,250	2,250
Thickner Pumps	1,250	1,250	1,250
Cooling Tower Fans	3,200	1,600	4,800
Oil Pumps	--	12,000	12,000
Peaking Turbine Feedwater Pumps	--	--	2,050
Peaking Turbine Condensate Pumps	--	--	2,050
Total Losses, H.P. (kW)	78,300 (58,367)	84,500 (63,660)	96,600 (72,009)

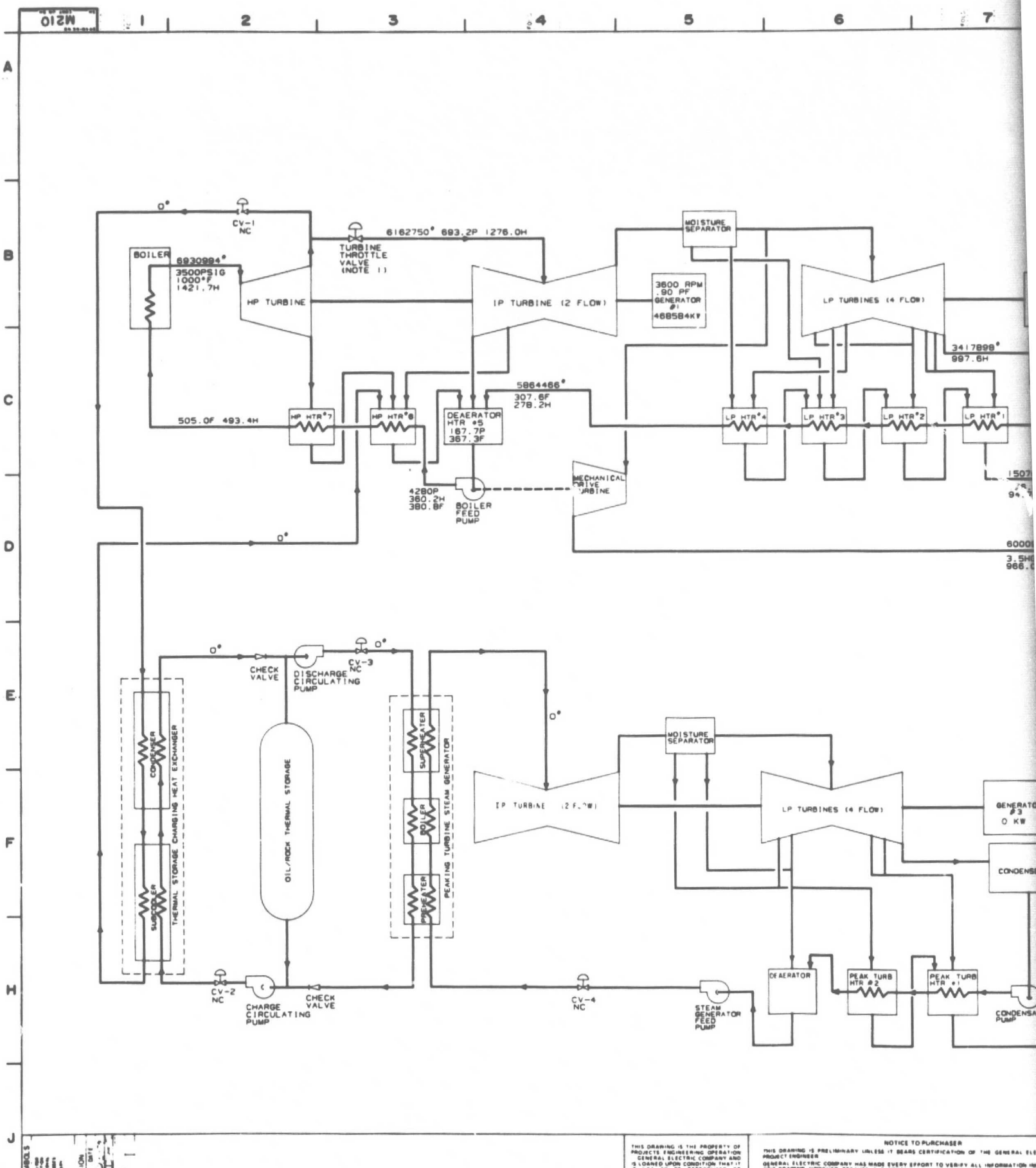

PRECEDING PAGE BLANK NOT FILMED

FOLDOUT FRAME

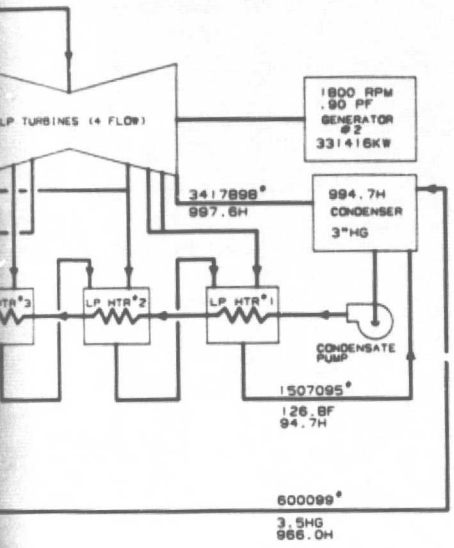

PERFORMANCE DATA

DESCRIPTION	BASE OPERATION
• MAIN STEAM CONDITIONS TO H.P. TURBINE	
FLOW, 10^6 LB/HR	6.93
PRESSURE, PSIA	3515
TEMPERATURE, °F	1000
• TYPE OF MAIN TURBINE	CC4F-38" LSB 3600/1800 RPM
• TYPE OF PEAKING TURBINE	TC4F-38"LSB
• MAIN WATER PUMPS FLOW RATE,	
CONDENSATE, 10^6 LB/HR	5.55
FEEDWATER, 10^6 LB/HR	6.93
• MAIN GENERATORS OUTPUT	468,584KW @ 3600 RPM 331,416KW @ 1800 RPM 800,000KW @ 3" HG
• PEAKING GENERATOR OUTPUT	-----
• TOTAL GENERATORS OUTPUT, KW	800,000
• AUXILIARY POWER, KW	56,440
• NET POWER TO TRANSFORMER, KW	743,560
• HOURS OF OPERATION	10
• % SWING	-----
• NET STATION HEAT RATE, BTU/KW-HR	9763
• THERMAL EFFICIENCY, %	35

NOTE 1: TURBINE THROTTLE VALVE IS AN INTEGRAL PART OF THE IP TURBINE.

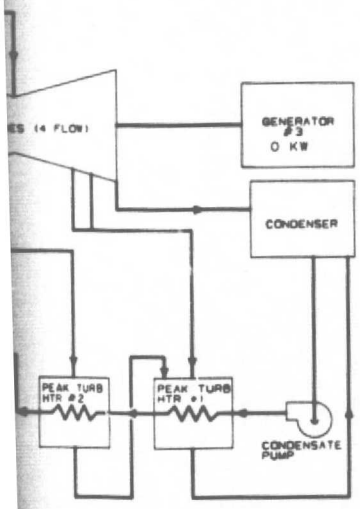

ORIGINAL PAGE IS OF POOR QUALITY

LEGEND

*:FLOW-LB/HR
P:PRESSURE-PSIA
H:ENTHALPY-BTU/LB
F:TEMPERATURE-DEG.F

Figure 4-8. TES Plant #1, Heat and Mass Balance Numbers for Base Cycle

BASE CYCLE

NOTICE TO PURCHASER

HEAT & MASS BALANCE DIAG.
800MW BASE FOSSIL PLANT
DUAL MEDIA THERMAL ENERGY STORAGE

GENERAL ELECTRIC
PROJECTS ENGINEERING OPERATION

THERMAL ENERGY STORAGE

M210

FOLDOUT FRAME

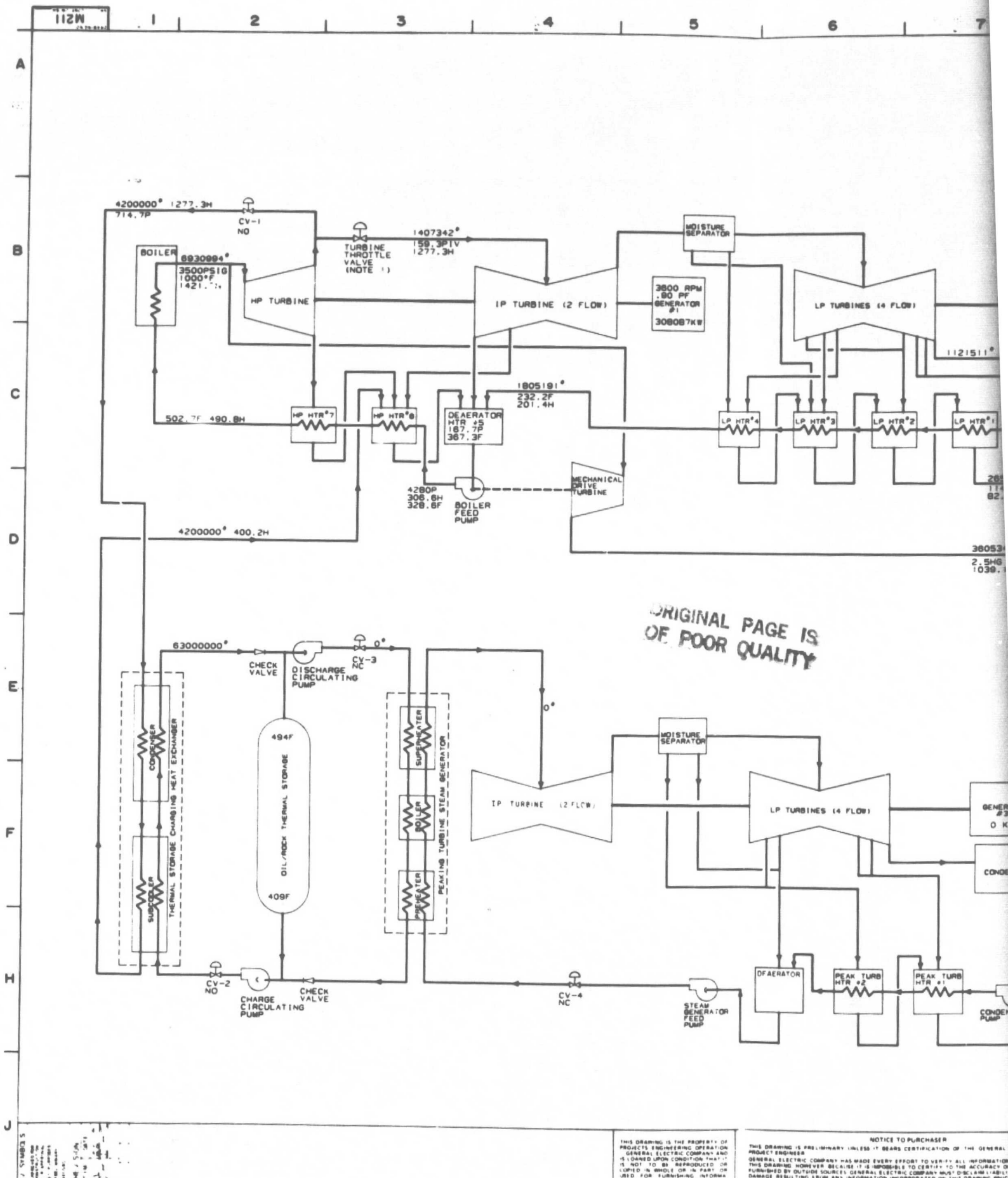

ORIGINAL PAGE IS OF POOR QUALITY

THIS DRAWING IS THE PROPERTY OF PROJECTS ENGINEERING OPERATION GENERAL ELECTRIC COMPANY AND IS LOANED UPON CONDITION THAT IT IS NOT TO BE REPRODUCED OR COPIED IN WHOLE OR IN PART OR USED FOR FURNISHING INFORMATION TO OTHERS OR FOR ANY OTHER PURPOSE WITHOUT PERMISSION OF PROJECTS ENGINEERING OPERATION

NOTICE TO PURCHASER

THIS DRAWING IS PRELIMINARY UNLESS IT BEARS CERTIFICATION OF THE GENERAL PROJECT ENGINEER

GENERAL ELECTRIC COMPANY HAS MADE EVERY EFFORT TO VERIFY ALL INFORMATION THIS DRAWING HOWEVER BECAUSE IT IS IMPOSSIBLE TO CERTIFY TO THE ACCURACY OF FURNISHED BY OUTSIDE SOURCES GENERAL ELECTRIC COMPANY MUST DISCLAIM LIABILITY DAMAGE RESULTING FROM ANY INFORMATION INCORPORATED ON THIS DRAWING WHICH INFORMATION FURNISHED BY THE CUSTOMER OTHER EQUIPMENT MANUFACTURERS TRIBUTORS IN THE EVENT OF A CONFLICT BETWEEN THE CONTRACT AND THIS DR MATERIALS AND AMOUNTS OF MATERIALS TO BE SUPPLIED BY GENERAL ELECTRIC COMPA OF THE CONTRACT SHALL GOVERN

FOLDOUT FRAME

PRECEDING PAGE BLANK NOT FILMED

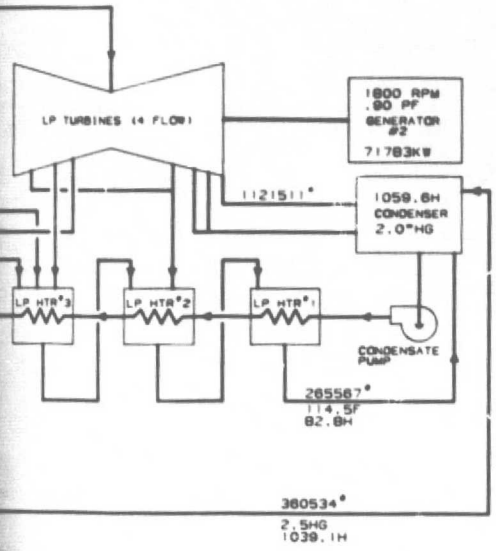

PERFORMANCE DATA

DESCRIPTION	CHARGING OPERATION
• MAIN STEAM CONDITIONS TO H.P. TURBINE	
FLOW, 10^6 LB/HR	6.93
PRESSURE, PSIA	3515
TEMPERATURE, °F	1000
• TYPE OF MAIN TURBINE	CC4F-38" LSB 3600/1800 RPM
• TYPE OF PEAKING TURBINE	TC4F-38" LSB
• MAIN WATER PUMPS FLOW RATE,	
CONDENSATE, 10^6 LB/HR	1.81
FEEDWATER 10^6 LB/HR	6.93
• MAIN GENERATORS OUTPUT	308,087KW @ 3600 RPM 71,783KW @ 1800 RPM 379,870KW @ 2" HG
• PEAKING GENERATOR OUTPUT	----
• TOTAL GENERATORS OUTPUT, KW	379,870
• AUXILIARY POWER, KW	63,660
• NET POWER TO TRANSFORMER, KW	316,210
• HOURS OF OPERATION	8
• % SWING	-57
• NET STATION HEAT RATE, BTU/KW-HR	22,508
• THERMAL EFFICIENCY, %	15

NOTE 1: TURBINE THROTTLE VALVE IS AN INTEGRAL PART OF THE IP TURBINE.

ORIGINAL PAGE IS OF POOR QUALITY

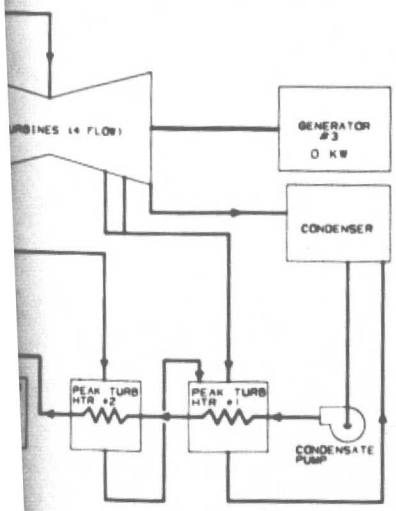

LEGEND

F: FLOW-LB/HR
P: PRESSURE-PSIA
H: ENTHALPY-BTU/LB
F: TEMPERATURE-DEG.F

Figure 4-9. TES Plant #1, Heat and Mass Balance Numbers for Charging Cycle

CHARGING CYCLE

NOTICE TO PURCHASER

HEAT & MASS BALANCE DIAG.
800MW BASE FOSSIL PLANT
DOE MEDIA THERMAL ENERGY STORAGE
THERMAL ENERGY STORAGE

GENERAL ELECTRIC
PROJECTS ENGINEERING OPERATION

M211

FOLDOUT FRAME

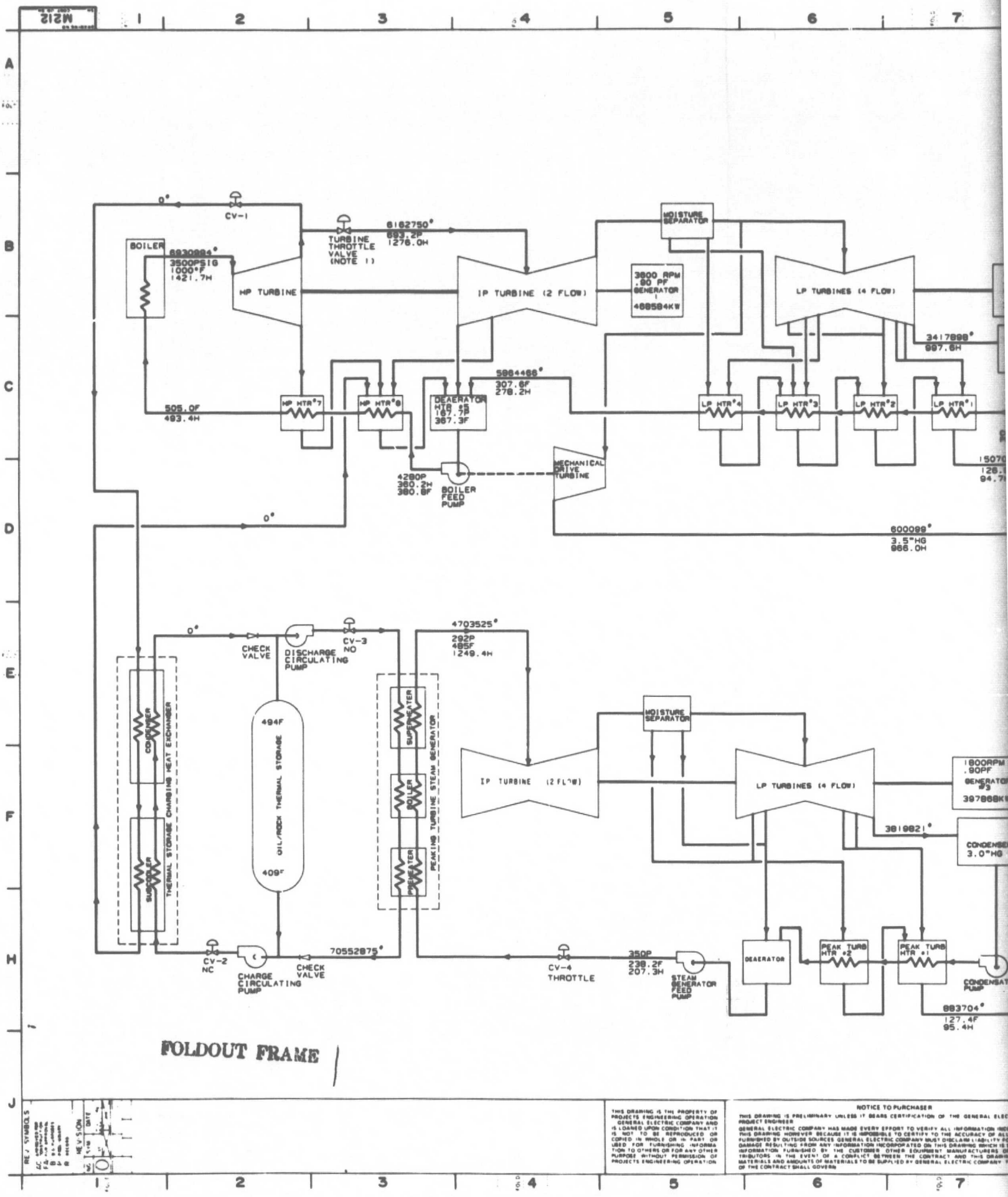

FOLDOUT FRAME 1

PRECEDING PAGE BLANK NOT FILMED

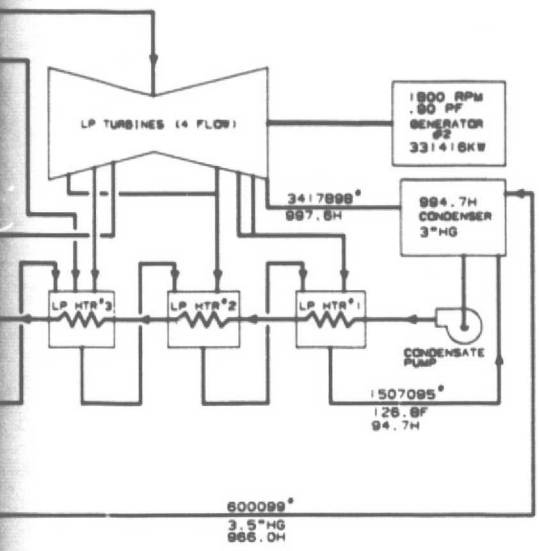

PERFORMANCE DATA

DESCRIPTION	DISCHARGING OPERATION
• MAIN STEAM CONDITIONS TO H.P. TURBINE	
FLOW, 10^6 LB/HR	6.93
PRESSURE, PSIA	3515
TEMPERATURE, °F	1000
• TYPE OF MAIN TURBINE	CC4F-38"LSB 3600/1800RPM
• TYPE OF PEAKING TURBINE	TC4F-38" LSB
• PEAKING TURBINE STEAM CONDITIONERS	292 PSIA 485°F
• MAIN WATER PUMPS FLOW RATE,	
CONDENSATE, 10^6 LB/HR	5.86
BOILER, 10^6 LB/HR	6.93
• MAIN GENERATORS OUTPUT	468,584KW @ 3600 RPM 331,416KW @ 1800 RPM 800,000KW @ 3" HG
• PEAKING GENERATOR OUTPUT	397,341KW @ 3" HG
• TOTAL GENERATORS OUTPUT, KW	1,197,341
• AUXILIARY POWER, KW	72,009
• NET POWER TO TRANSFORMER, KW	1,125,332
• HOURS OF OPERATION	6
• % SWING	+53
• NET STATION HEAT RATE, BTU/KW-HR	6,520
• THERMAL EFFICIENCY, %	52

NOTE 1: TURBINE THROTTLE VALVE IS AN INTEGRAL PART OF THE IP TURBINE.

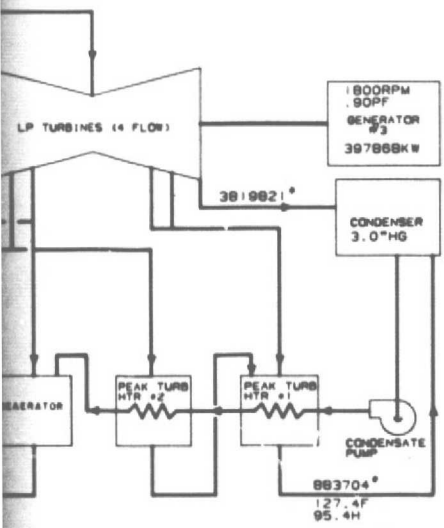

LEGEND

*:FLOW-LB/HR
P:PRESSURE-PSIA
H:ENTHALPY-BTU/LB
F:TEMPERATURE-DEG.F

Figure 4-10. TES Plant #1, Heat and Mass Balance Numbers for Discharging Cycle

DISCHARGING CYCLE

NOTICE TO PURCHASER

HEAT & MASS BALANCE DIAG.
800MW BASE FOSSIL PLANT
DUAL MEDIA THERMAL ENERGY STORAGE

THERMAL ENERGY STORAGE

DOE EPRI

GENERAL ELECTRIC
PROJECTS ENGINEERING OPERATION

M212

2 FOLDOUT FRAME

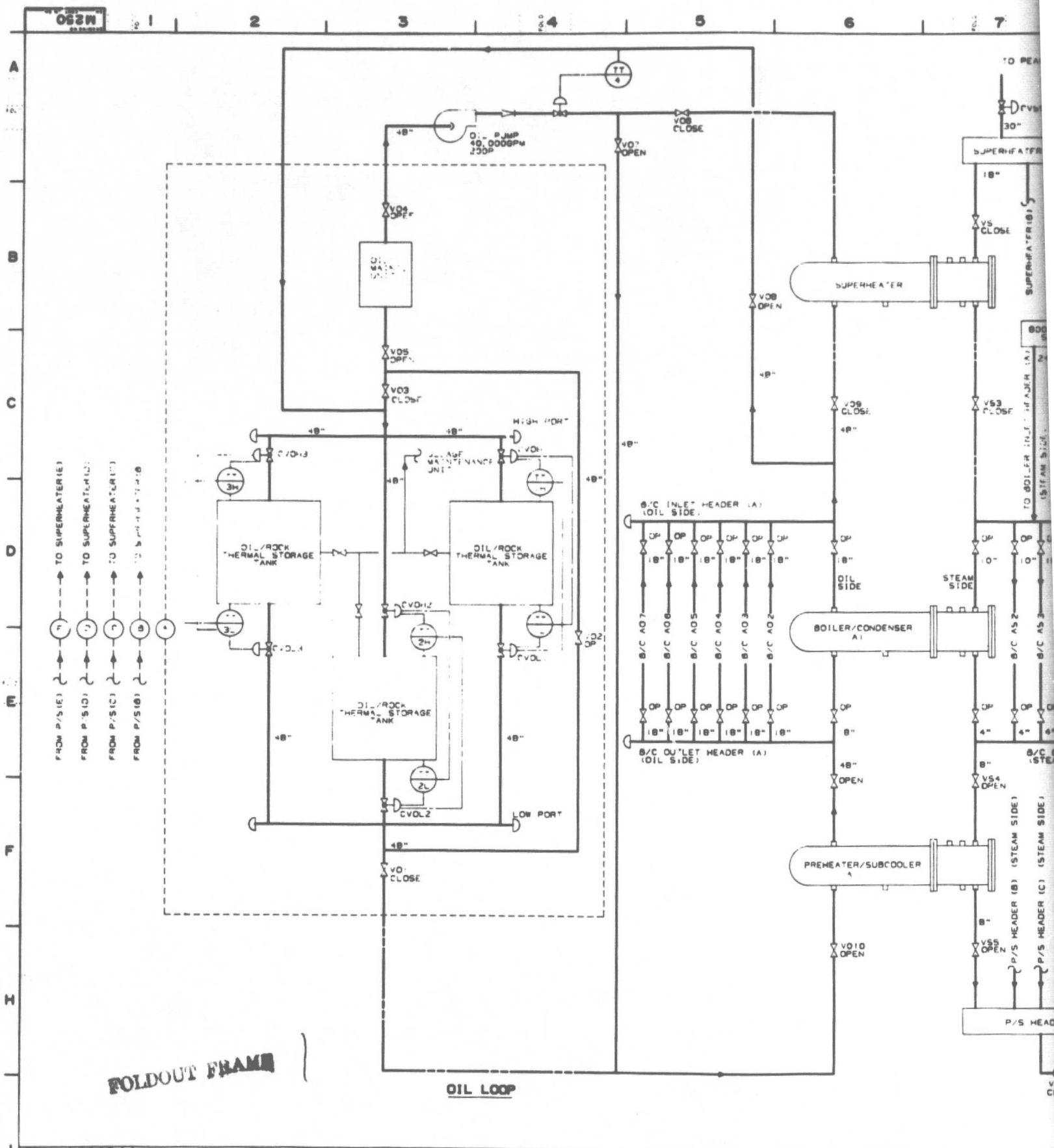

FOLDOUT FRAME

OIL LOOP

THIS DRAWING IS THE PROPERTY OF PROJECTS ENGINEERING OPERATION GENERAL ELECTRIC COMPANY AND IS LOANED UPON CONDITION THAT IT IS NOT TO BE REPRODUCED OR COPIED IN WHOLE OR IN PART OR USED FOR FURNISHING INFORMATION TO OTHERS OR FOR ANY OTHER PURPOSE WITHOUT PERMISSION OF PROJECTS ENGINEERING OPERATION

NOTICE TO PURCHASER

THIS DRAWING IS PRELIMINARY UNLESS IT BEARS CERTIFICATION OF THE GENERAL ELECTRIC PROJECT ENGINEER

GENERAL ELECTRIC COMPANY HAS MADE EVERY EFFORT TO VERIFY ALL INFORMATION RECORDED ON THIS DRAWING HOWEVER BECAUSE IT IS IMPOSSIBLE TO CERTIFY TO THE ACCURACY OF ALL INFORMATION FURNISHED BY OUTSIDE SOURCES GENERAL ELECTRIC COMPANY MUST DISCLAIM LIABILITY FOR DAMAGE RESULTING FROM ANY INFORMATION INCORPORATED ON THIS DRAWING WHICH IS BASED ON INFORMATION FURNISHED BY THE CUSTOMER OTHER EQUIPMENT MANUFACTURERS OR CONTRIBUTORS IN THE EVENT OF A CONFLICT BETWEEN THE CONTRACT AND THIS DRAWING MATERIALS AND AMOUNTS OF MATERIALS TO BE SUPPLIED BY GENERAL ELECTRIC COMPANY THE TERMS OF THE CONTRACT SHALL GOVERN

PRECEDING PAGE BLANK NOT FILMED

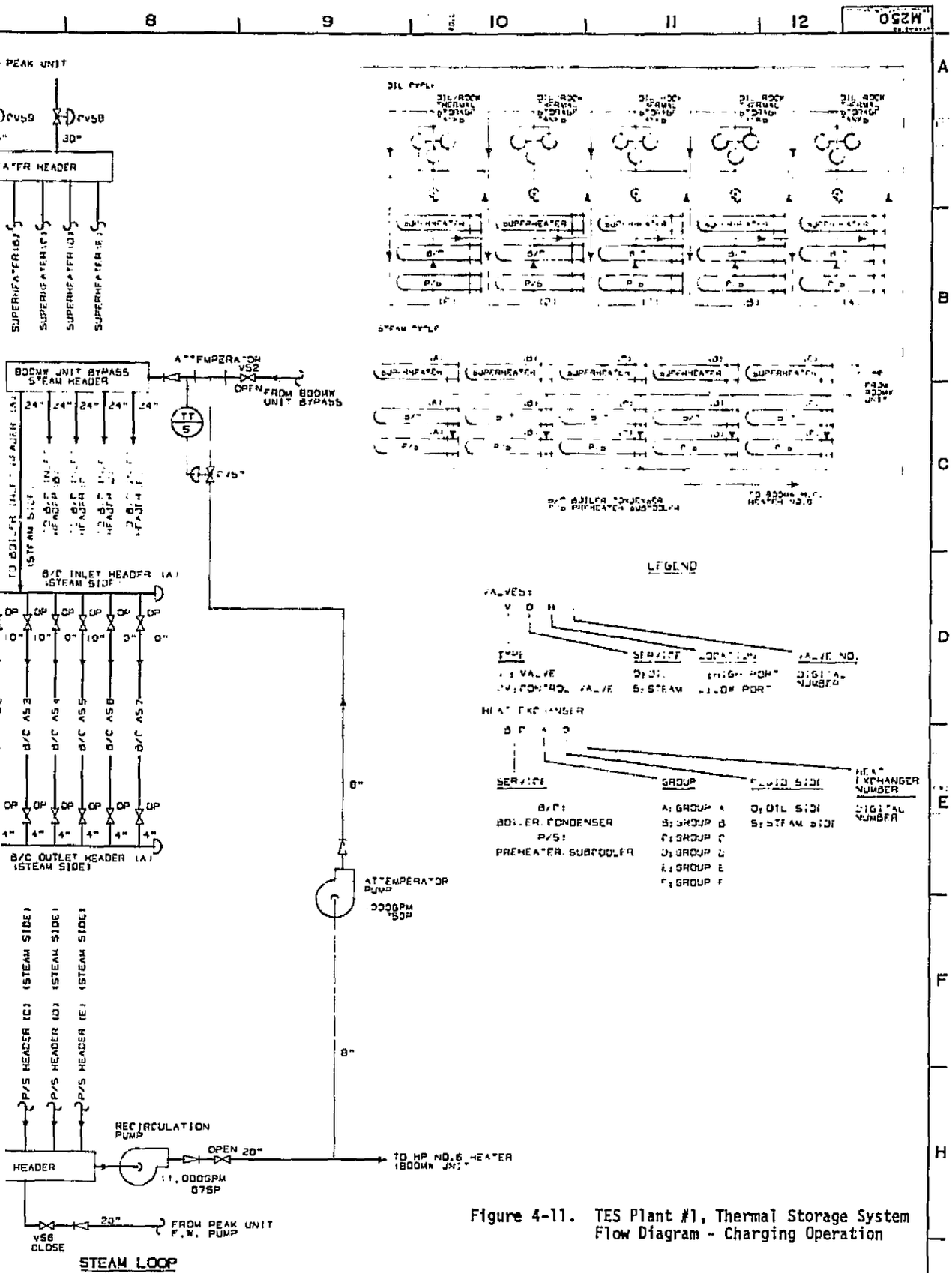

Figure 4-11. TES Plant #1, Thermal Storage System Flow Diagram - Charging Operation

CHARGING OPERATION

PRELIMINARY

STORAGE SYSTEM FLOW DIAGRAM
800MW BASE FOSSIL PLANT

GENERAL ELECTRIC
PROJECTS ENGINEERING OPERATION

DUAL MEDIA THERMAL ENERGY STORAGE

DOE/EPRI

M250

2 FOLDOUT FRAME

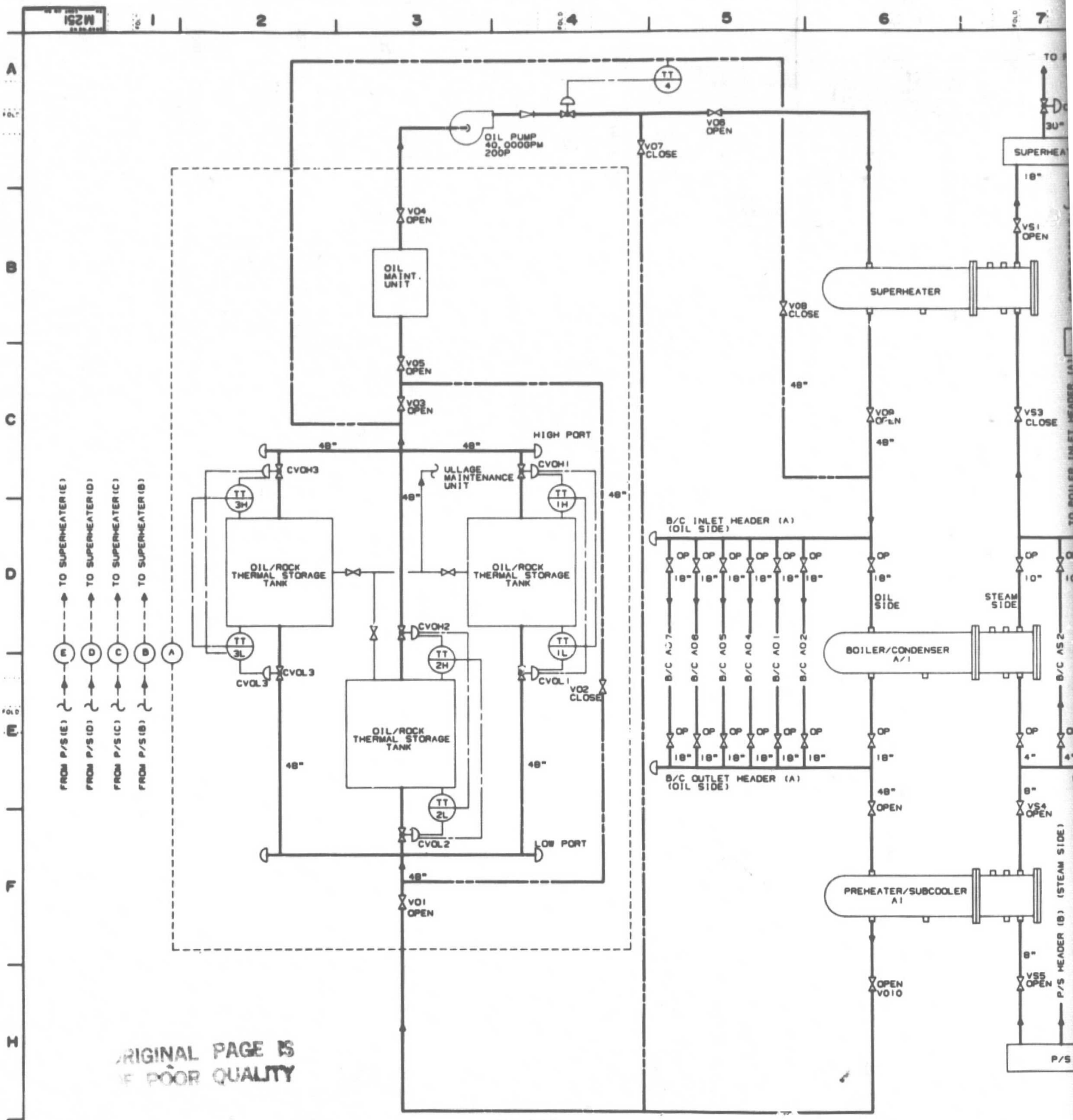

OIL LOOP

STEAM LO

THIS DRAWING IS THE PROPERTY OF PROJECTS ENGINEERING OPERATION - GENERAL ELECTRIC COMPANY AND IS LOANED UPON CONDITION THAT IT IS NOT TO BE REPRODUCED OR COPIED IN WHOLE OR IN PART OR USED FOR FURNISHING INFORMATION TO OTHERS OR FOR ANY OTHER PURPOSE WITHOUT PERMISSION OF PROJECTS ENGINEERING OPERATION

NOTICE TO PURCHASER

THIS DRAWING IS PRELIMINARY UNLESS IT BEARS CERTIFICATION OF THE GENERAL PROJECT ENGINEER

GENERAL ELECTRIC COMPANY HAS MADE EVERY EFFORT TO VERIFY ALL INFORMATION THIS DRAWING HOWEVER, BECAUSE IT IS IMPOSSIBLE TO CERTIFY TO THE ACCURACY OF FURNISHED BY OUTSIDE SOURCES, GENERAL ELECTRIC COMPANY MUST DISCLAIM LIABILITY DAMAGE RESULTING FROM ANY INFORMATION INCORPORATED ON THIS DRAWING WHICH INFORMATION FURNISHED BY THE CUSTOMER OTHER EQUIPMENT MANUFACTURERS TRIBUTORS. IN THE EVENT OF A CONFLICT BETWEEN THE CONTRACT AND THIS DRAWING MATERIALS AND AMOUNTS OF MATERIALS TO BE SUPPLIED BY GENERAL ELECTRIC COMPANY OF THE CONTRACT SHALL GOVERN

PRECEDING PAGE BLANK NOT FILMED

FOLDOUT FRAME 1

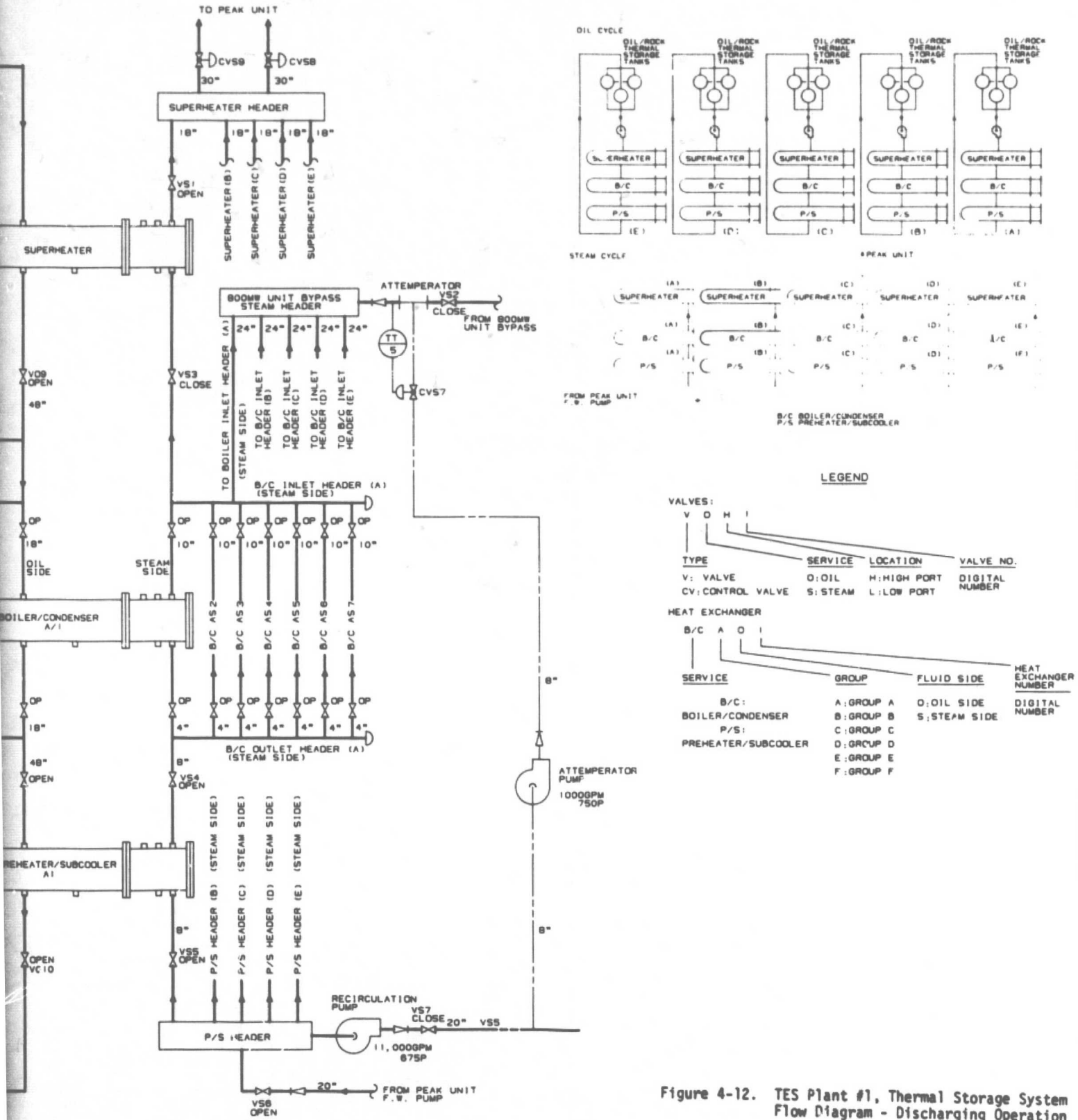

Figure 4-12. TES Plant #1, Thermal Storage System Flow Diagram - Discharging Operation

NOTICE TO PURCHASER

STORAGE SYSTEM FLOW DIAGRAM
800MW BASE FOSSIL PLANT

DUAL MEDIA THERMAL ENERGY STORAGE

GENERAL ELECTRIC
PROJECTS ENGINEERING OPERATION

2 FOLDOUT FRAME

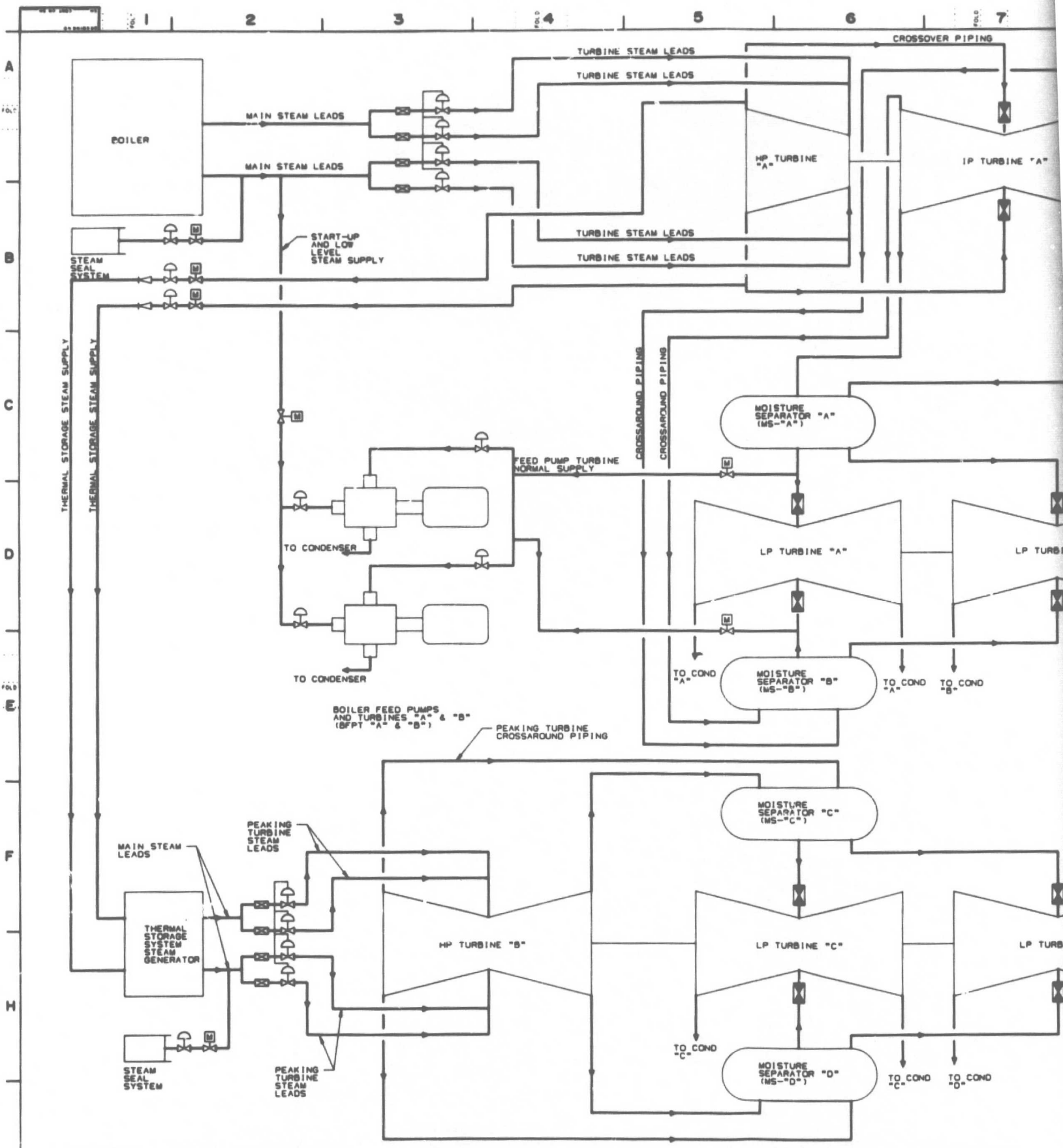

THIS DRAWING IS THE PROPERTY OF PROJECTS ENGINEERING OPERATION GENERAL ELECTRIC COMPANY AND IS LOANED UPON CONDITION THAT IT IS NOT TO BE REPRODUCED OR COPIED IN WHOLE OR IN PART OR USED FOR FURNISHING INFORMATION TO OTHERS OR FOR ANY OTHER PURPOSE WITHOUT PERMISSION OF PROJECTS ENGINEERING OPERATION

NOTICE TO PURCHASER

THIS DRAWING IS PRELIMINARY UNLESS IT BEARS CERTIFICATION OF THE GENERAL ELECTRIC C PROJECT ENGINEER

GENERAL ELECTRIC COMPANY HAS MADE EVERY EFFORT TO VERIFY ALL INFORMATION INCORPOR THIS DRAWING HOWEVER BECAUSE IT IS IMPOSSIBLE TO CERTIFY TO THE ACCURACY OF ALL INFOR PURCHASED BY OUTSIDE SOURCES GENERAL ELECTRIC COMPANY MUST DISCLAIM LIABILITY FOR ALL DAMAGE RESULTING FROM ANY INFORMATION INCORPORATED ON THIS DRAWING WHICH IS SUPPLIE INFORMATION FURNISHED BY THE CUSTOMER OTHER EQUIPMENT MANUFACTURERS OR OTH TRIBUTORS IN THE EVENT OF A CONFLICT BETWEEN THE CONTRACT AND THIS DRAWING RE MATERIALS AND AMOUNTS OF MATERIALS TO BE SUPPLIED BY GENERAL ELECTRIC COMPANY THE PR OF THE CONTRACT SHALL GOVERN

FOLDOUT FRAME

PRECEDING PAGE BLANK NOT FILMED

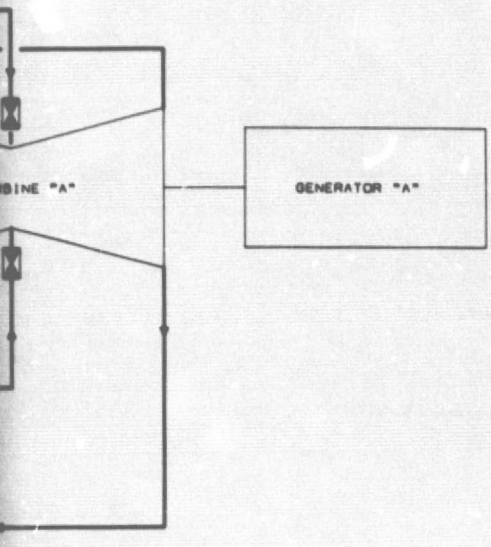

TYPICAL PIPING SIZES AND MATERIALS

MAIN TURBINE

LOCATION	MATERIALS	NO.-SIZE
MAIN STEAM LEADS	2 1/4CR-1MO	(2)-30"OD-6"WALL TO(4)-20"OD-4.25"WALL
TURBINE STEAM LEADS	2 1/4CR-1MO	(4)-20"OD-4.25"WALL
CROSSOVER PIPING	CARBON STEEL	(2)-36"OD-1.5"WALL
THERMAL STORAGE SUPPLY	CARBON STEEL	(2)-30"OD-1.25"WALL
CROSSAROUND PIPING	NI-CR-CU ALLOY	(4)-40"OD-0.625"WALL
STEAM SEAL SYSTEM	2 1/4CR-1MO	(1)-6"OD-0.864"WALL
BFPT START-UP SUPPLY	2 1/4CR-1MO	(1)-8"OD-0.906" TO (2)-10"OD-1.125"WALL
BFPT NORMAL SUPPLY	CARBON STEEL	(2)-16"OD-0.656"WALL

PEAKING TURBINE

MAIN STEAM LEADS	CARBON STEEL	(2)-40"OD-0.875"WALL TO (4) 30"OD-0.625" WA
TURBINE STEAM LEADS	CARBON STEEL	(4)-30"OD-0.625"WALL
STEAM SEAL SYSTEM	CARBON STEEL	(1)-8"OD-0.322"WALL
CROSSAROUND PIPING	NI-CR-CU ALLOY	(4)-44"OD-0.375"WALL

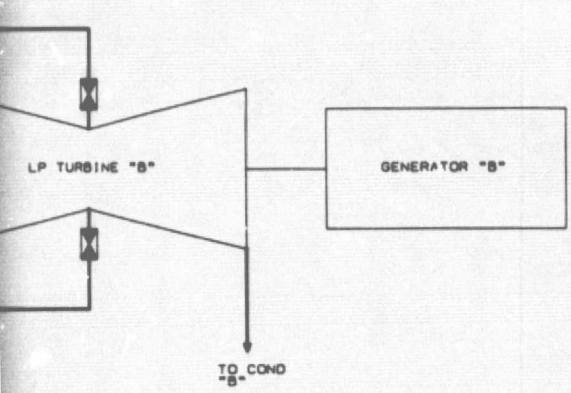

ORIGINAL PAGE IS OF POOR QUALITY

LEGEND

- CONTROL VALVE
- CHECK VALVE
- MOTOR OPERATED VALVE
- MAIN STEAM STOP VALVE
- COMBINED INTERMEDIATE VALVE

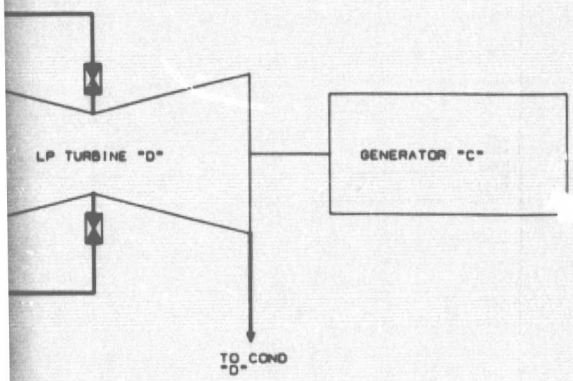

Figure 4-13. TES Plant #1, Main Steam Flow Diagram

PLANT #1

GENERAL ELECTRIC COMPANY

DRAWN BY ALN/CAD | CHECKED BY | SCALE NONE

MAIN STEAM FLOW DIAGRAM
800MW BASE FOSSIL PLANT
DUAL MEDIA THERMAL ENERGY STORAGE

PROJECT THERMAL ENERGY STORAGE

CUSTOMER DOE/EPRI

GENERAL ELECTRIC
PROJECTS ENGINEERING OPERATION
INSTALLATION AND SERVICE ENGINEERING DIVISION
SCHENECTADY, N.Y. U.S.A.

3N7113T | M270

2 FOLDOUT FRAME

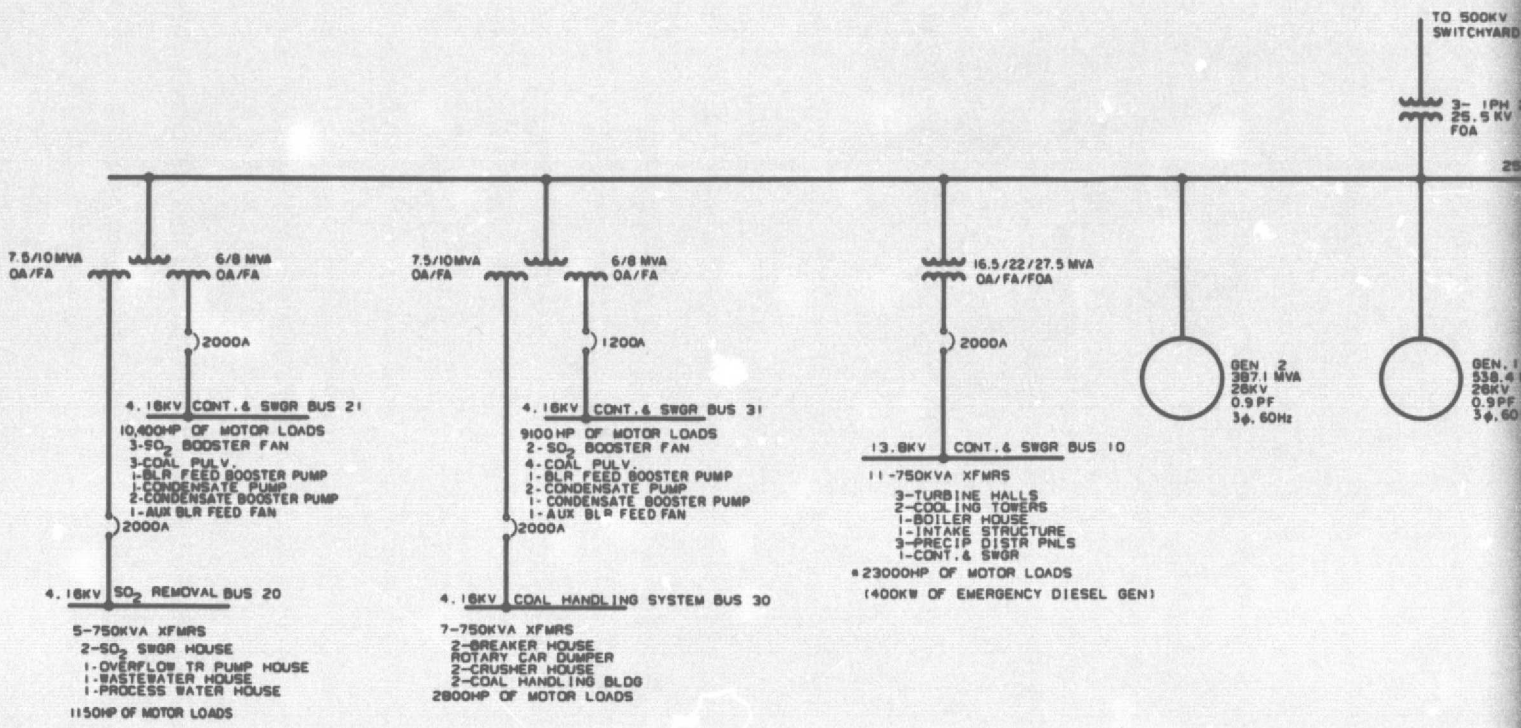

ORIGINAL PAGE IS
OF POOR QUALITY

FOLDOUT FRAME

PRECEDING PAGE BLANK NOT FILMED

THIS DRAWING IS THE PROPERTY OF PROJECTS ENGINEERING OPERATION GENERAL ELECTRIC COMPANY AND IS LOANED UPON CONDITION THAT IT IS NOT TO BE REPRODUCED OR COPIED IN WHOLE OR IN PART OR USED FOR FURNISHING INFORMATION TO OTHERS OR FOR ANY OTHER PURPOSE WITHOUT PERMISSION OF PROJECTS ENGINEERING OPERATION

NOTICE TO PURCHASER

THIS DRAWING IS PRELIMINARY UNLESS IT BEARS CERTIFICATION OF THE GENERAL ELECTRIC PROJECT ENGINEER

GENERAL ELECTRIC COMPANY HAS MADE EVERY EFFORT TO VERIFY ALL INFORMATION ON THIS DRAWING HOWEVER BECAUSE IT IS IMPOSSIBLE TO CERTIFY TO THE ACCURACY OF INFORMATION FURNISHED BY OUTSIDE SOURCES GENERAL ELECTRIC COMPANY MUST DISCLAIM LIABILITY FOR DAMAGE RESULTING FROM ANY INFORMATION INCORPORATED ON THIS DRAWING WHICH INFORMATION FURNISHED BY THE CUSTOMER OTHER EQUIPMENT MANUFACTURERS OR CONTRIBUTORS IN THE EVENT OF A CONFLICT BETWEEN THE CONTRACT AND THIS DRAWING MATERIALS AND AMOUNTS OF MATERIALS TO BE SUPPLIED BY GENERAL ELECTRIC COMPANY OF THE CONTRACT SHALL GOVERN

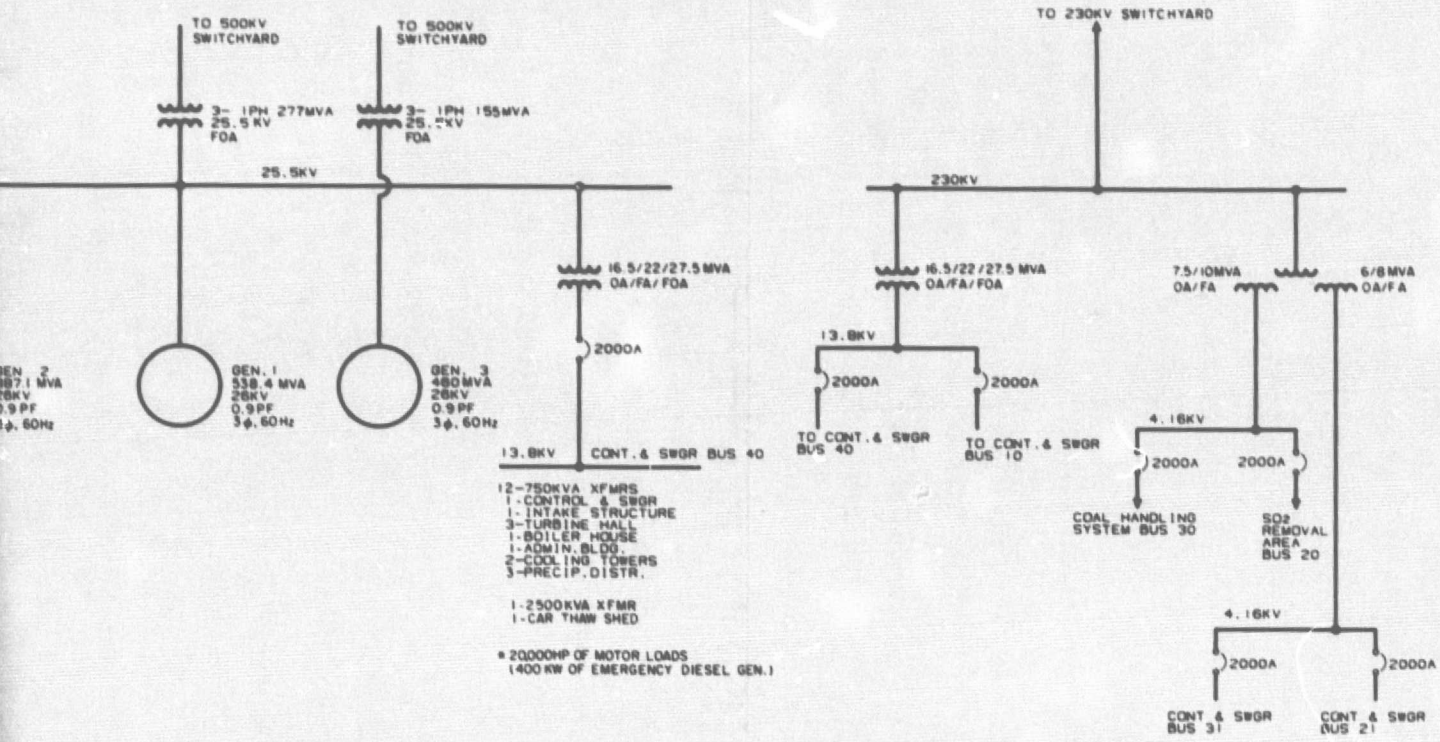

* INCLUDES 1000 HP FOR TES AUXILIARIES.

FOLDOUT FRAME

Figure 4-14. TES Plant #1, One Line Electrical Diagram

NOTICE TO PURCHASER

ELECTRICAL ONE-LINE DIAGRAM
800MW BASE FOSSIL PLANT
DUAL MEDIA STORAGE

THERMAL ENERGY STORAGE

GENERAL ELECTRIC
PROJECTS ENGINEERING OPERATION

E152

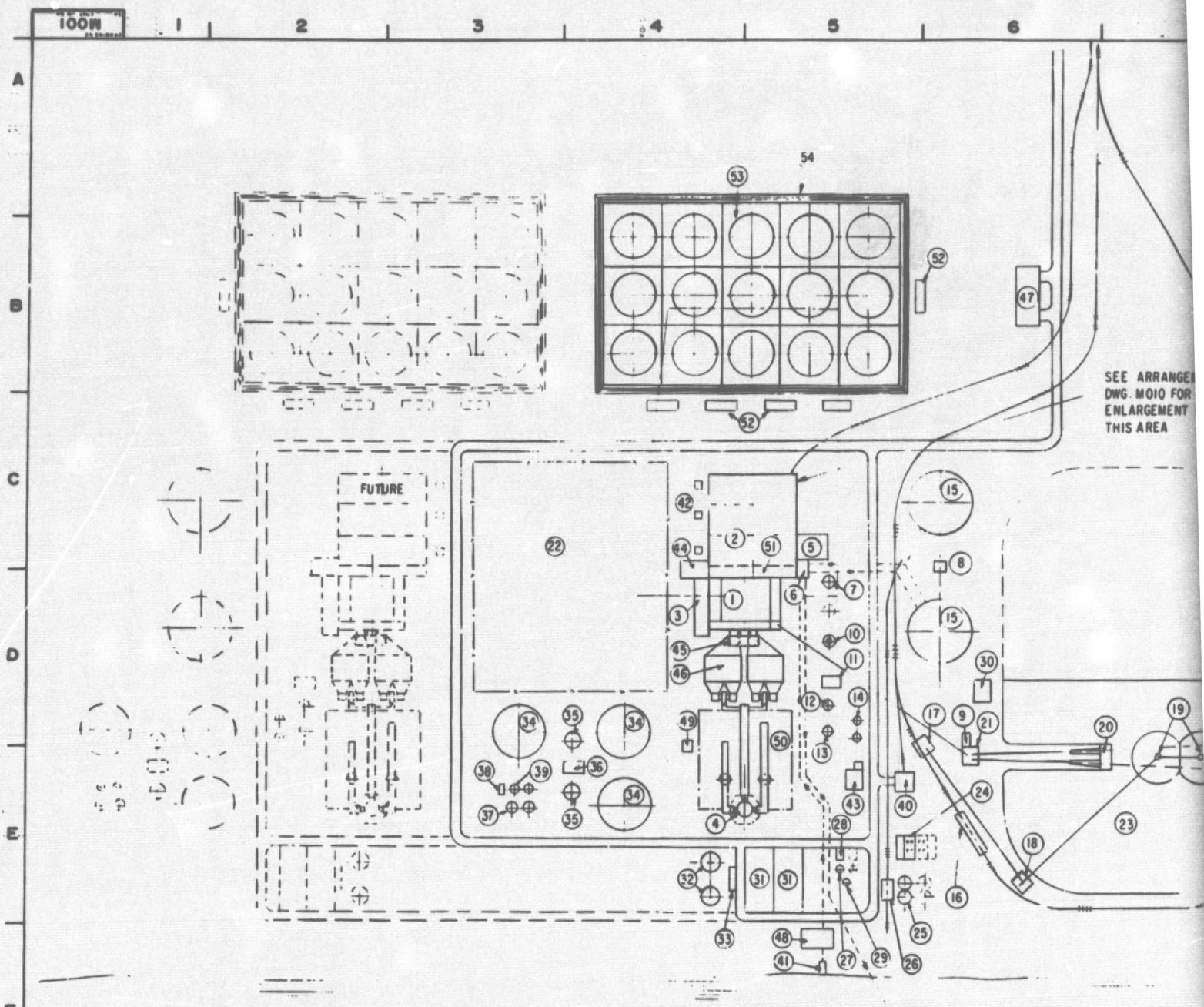

FOLDOUT FRAME 1

PRECEDING PAGE BLANK NOT FILMED

REV SYMBOLS

REVISION

THIS DRAWING IS THE PROPERTY OF PROJECTS ENGINEERING OPERATION GENERAL ELECTRIC COMPANY AND IS LOANED UPON CONDITION THAT IT IS NOT TO BE REPRODUCED OR COPIED IN WHOLE OR IN PART OR USED FOR FURNISHING INFORMATION TO OTHERS OR FOR ANY OTHER PURPOSE WITHOUT PERMISSION OF PROJECTS ENGINEERING OPERATION

NOTICE TO PURCHASER

THIS DRAWING IS PRELIMINARY UNLESS IT BEARS CERTIFICATION OF THE GEN PROJECT ENGINEER

GENERAL ELECTRIC COMPANY HAS MADE EVERY EFFORT TO VERIFY ALL INFORM THIS DRAWING HOWEVER BECAUSE IT IS IMPOSSIBLE TO CERTIFY TO THE ACCURA FURNISHED BY OUTSIDE SOURCES GENERAL ELECTRIC COMPANY MUST DISCLAIM L DAMAGE RESULTING FROM ANY INFORMATION INCORPORATED ON THIS DRAWING INFORMATION FURNISHED BY THE CUSTOMER OTHER EQUIPMENT MANUFAC TRIBUTORS IN THE EVENT OF A CONFLICT BETWEEN THE CONTRACT AND TH MATERIALS AND AMOUNTS OF MATERIALS TO BE SUPPLIED BY GENERAL ELECTRIC C OF THE CONTRACT SHALL GOVERN

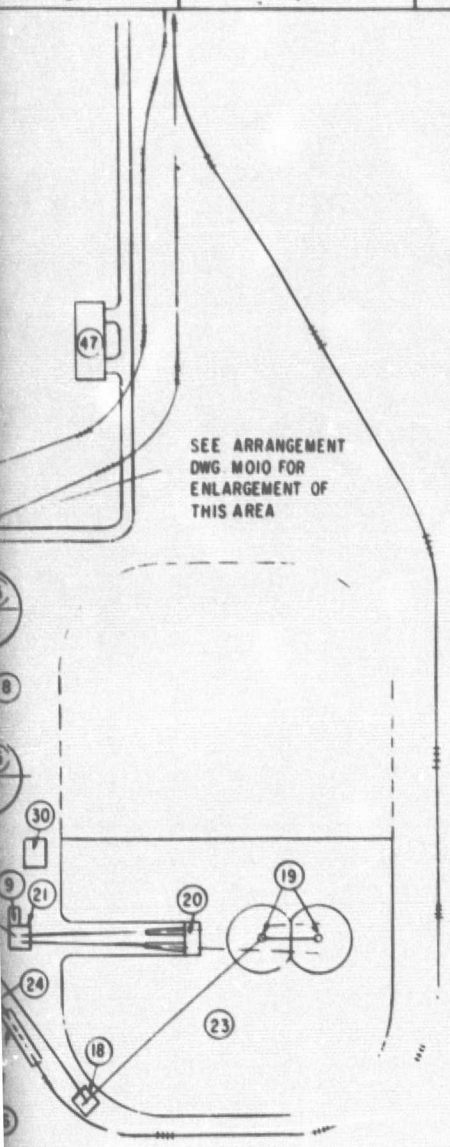

PLANT NOMENCLATURE

1 - BOILER HOUSE
2 - TURBINE HALL
3 - SERVICE AREA
4 - STACK
5 - ADMINISTRATION BUILDING
6 - CIRCULATING WATER PUMP HOUSE
7 - CONDENSATE STORAGE TANK
8 - COOLING TOWER SWITCHGEAR BUILDING
9 - COAL HANDLING SYSTEM SWITCHGEAR BUILDING
10 - FUEL OIL TANK
11 - BATCH WASTE SUMP
12 - RECIRCULATING TANK
13 - SETTLING TANK
14 - DEWATERING BINS
15 - MAIN COOLING TOWERS
16 - CAR THAW SHED
17 - ROTARY CAR DUMPER
18 - BREAKER HOUSE
19 - LOWERING WELLS
20 - PLOW MAINTENANCE SHED
21 - CRUSHER HOUSE
22 - SWITCHYARD
23 - COAL PILE (60 DAY STORAGE)
24 - LIME SLAKING & SERVICE BUILDING
25 - LIME STORAGE SILOS
26 - LIME UNLOADING BUILDING & TUNNEL
27 - PROCESS WATER SURGE TANK
28 - PROCESS & SEAL WATER PUMP HOUSE
29 - SEAL WATER TANK
30 - COAL PILE SETTLING BASIN
31 - WASTE WATER SETTLING BASINS
32 - BATCH HOLDING TANKS
33 - WASTE WATER TREATMENT BUILDING
34 - THICKENERS
35 - THICKENER OVERFLOW TANKS
36 - THICKENER EQUIPMENT BUILDING
37 - UNDERFLOW SURGE TANKS
38 - SLUDGE PUMP HOUSE
39 - FLY ASH SILOS
40 - LOCOMOTIVE REPAIR SHOP
41 - MAKEUP WATER INTAKE STRUCTURE / FIRE PUMP HOUSE
42 - TRANSFORMER YARD
43 - MATERIAL HANDLING & SERVICE / SWITCHGEAR BUILDING
44 - CONTROL & SWITCHGEAR AREA
45 - SECONDARY AIR PREHEATERS
46 - PRECIPITATORS
47 - WAREHOUSE
48 - MAKEUP WATER PRETREATMENT BUILDING
49 - SO_2 CONTROL & SWITCHGEAR BUILDING
50 - SO_2 REMOVAL AREA
51 - AUXILIARY BAY
52 - HEATERS
53 - OIL / ROCK TANKS
54 - CONTAINMENT DIKE

NOTE
PLOT PLAN IS BASED ON DRAWINGS PREPARED FOR THE U.S. NUCLEAR REGULATORY COMMISSION UNDER CONTRACT NO. AT (49-24)-0351 AND THE U.S. DEPARTMENT OF ENERGY UNDER CONTRACT NO. EY-76-02-2477 BY UNITED ENGINEERS & CONSTRUCTORS INC.

0 100 200 300 400 500 1000

SCALE 1" = 200'

Figure 4-15. TES Plant #1, Plot Plan

PRELIMINARY

NOTICE TO PURCHASER
IS PRELIMINARY UNLESS IT BEARS CERTIFICATION OF THE GENERAL ELECTRIC COMPANY
THIS COMPANY HAS MADE EVERY EFFORT TO VERIFY ALL INFORMATION INCORPORATED ON HOWEVER BECAUSE IT IS IMPOSSIBLE TO CERTIFY TO THE ACCURACY OF ALL INFORMATION OUTSIDE SOURCES GENERAL ELECTRIC COMPANY MUST DISCLAIM LIABILITY FOR ALL LOSS OR ...ING FROM ANY INFORMATION INCORPORATED ON THIS DRAWING WHICH IS SUPPLIED FROM FURNISHED BY THE CUSTOMER OTHER EQUIPMENT MANUFACTURERS OR OTHER CON... THE EVENT OF A CONFLICT BETWEEN THE CONTRACT AND THIS DRAWING RESPECTING AMOUNTS OF MATERIALS TO BE SUPPLIED BY GENERAL ELECTRIC COMPANY THE PROVISIONS ...T SHALL GOVERN

SCALE 1" = 200'

PLOT PLAN / PLANT NO. 1
800 MW BASE FOSSIL PLANT WITH OIL / ROCK TANKS

PROJECT THERMAL ENERGY STORAGE

MADE FOR DOE EPRI

GENERAL ELECTRIC
PROJECTS ENGINEERING OPERATION

M001

FOLDOUT FRAME

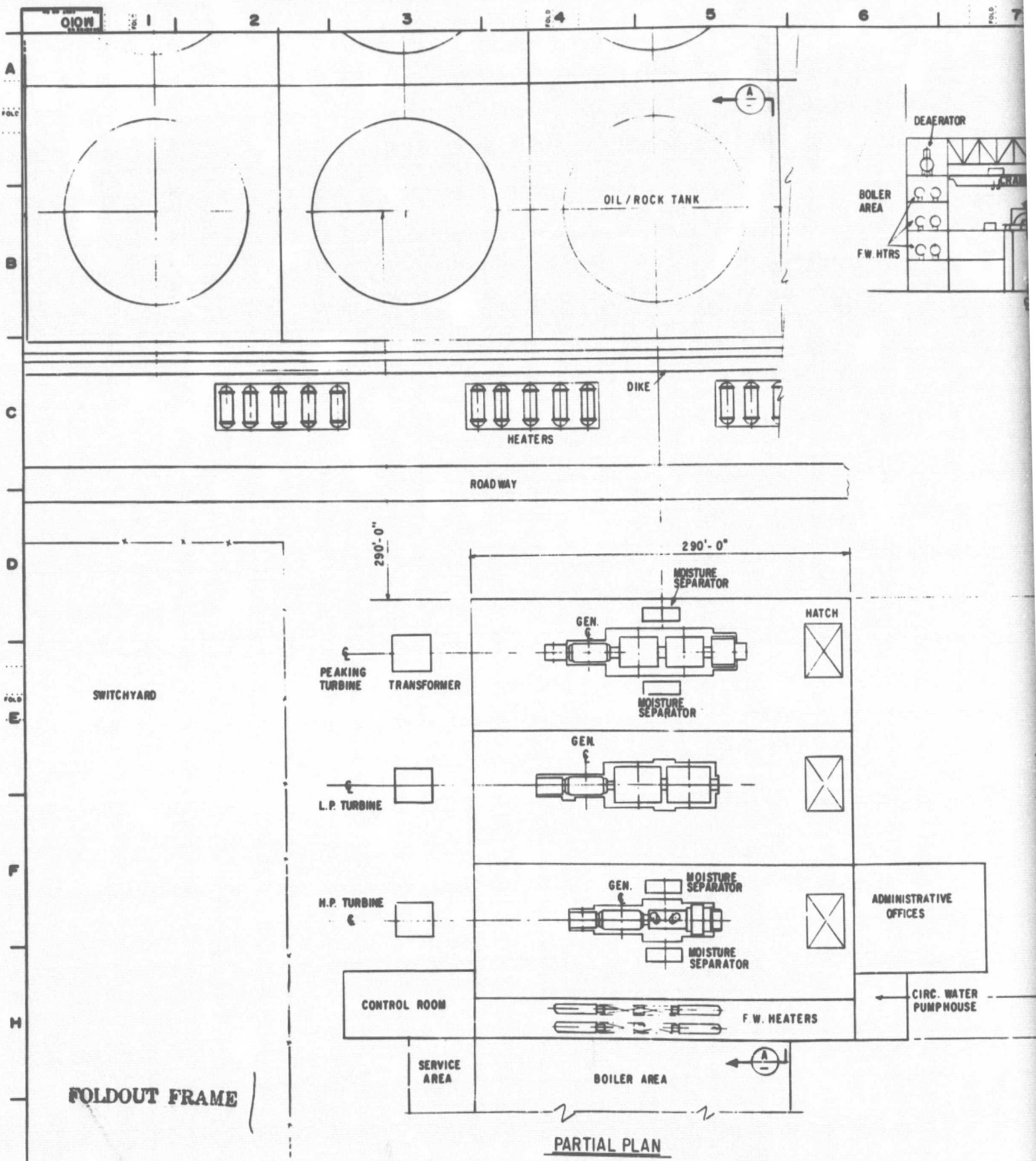

PRECEDING PAGE BLANK NOT FILMED

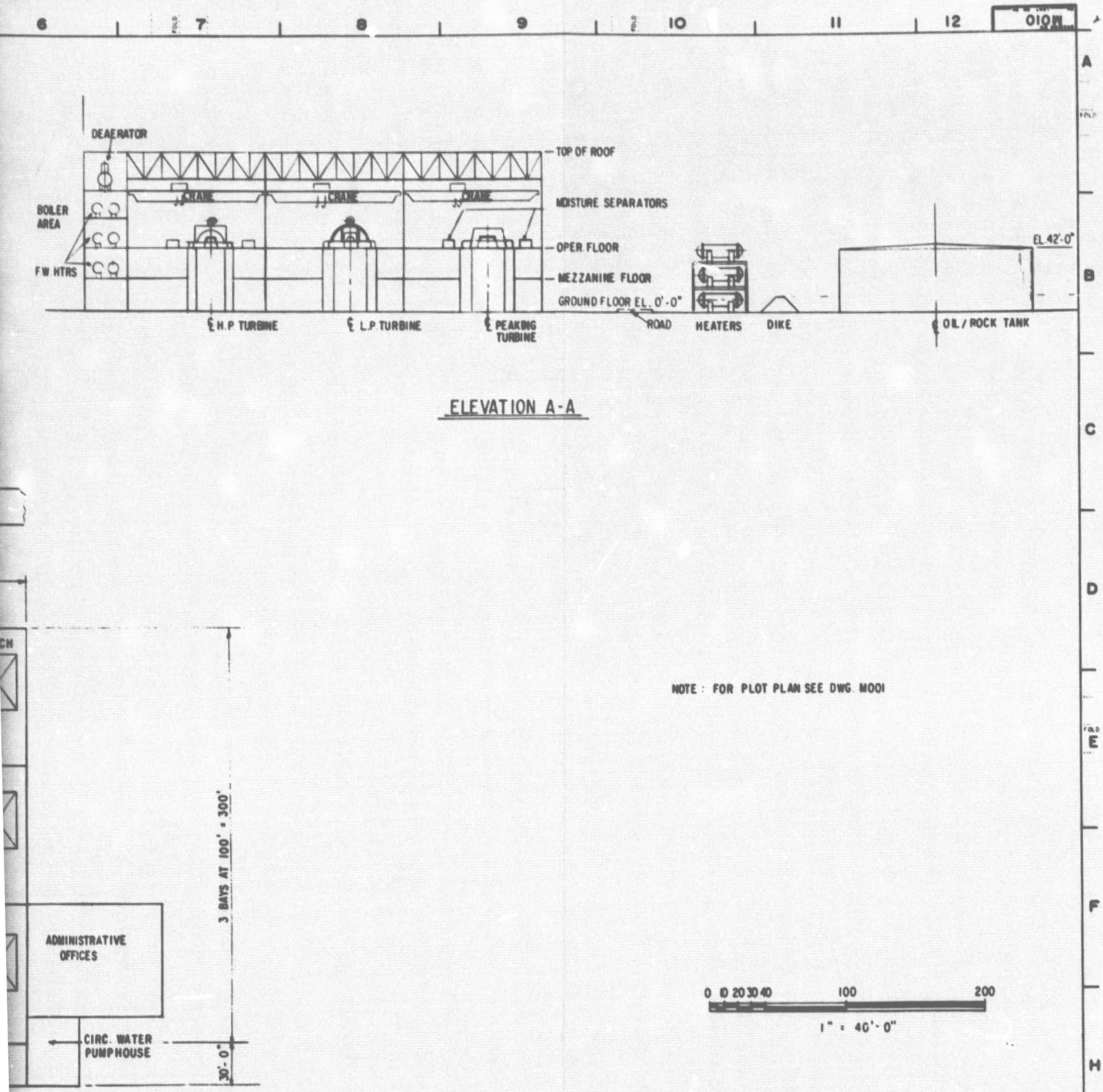

Figure 4-16. TES Plant #1, Equipment Arrangement

PRELIMINARY

ARRANGEMENT/PLANT NO 1
800 MW BASE FOSSIL PLANT
WITH OIL ROCK/TANKS

THERMAL ENERGY STORAGE

DOE EPRI

1" = 40'

GENERAL ELECTRIC
PROJECTS ENGINEERING OPERATION

3N71137

M010

FOLDOUT FRAME

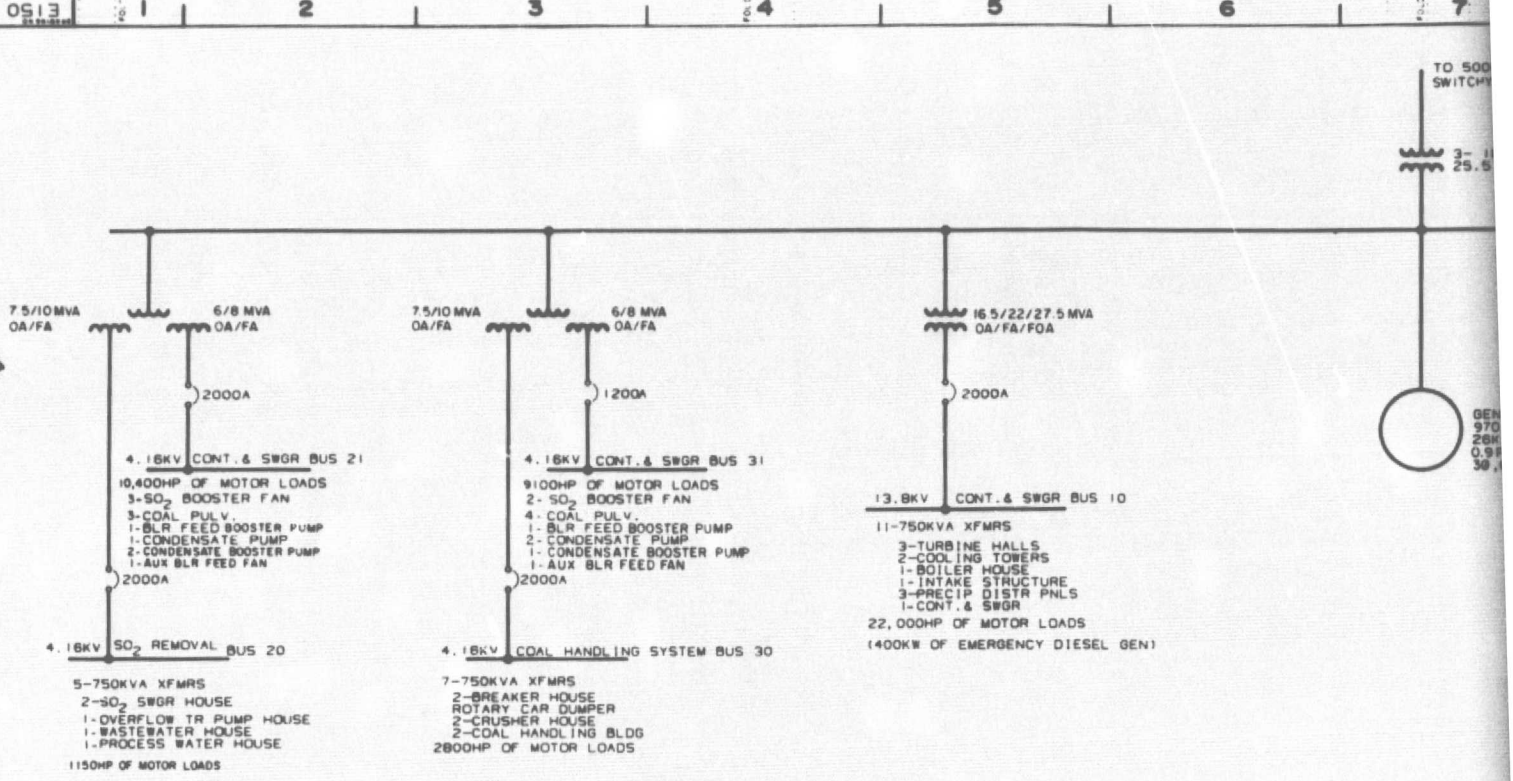

PRECEDING PAGE BLANK NOT FILMED

FOLDOUT FRAME 1

THIS DRAWING IS THE PROPERTY OF PROJECTS ENGINEERING OPERATION GENERAL ELECTRIC COMPANY AND IS LOANED UPON CONDITION THAT IT IS NOT TO BE REPRODUCED OR COPIED IN WHOLE OR IN PART OR USED FOR FURNISHING INFORMATION TO OTHERS OR FOR ANY OTHER PURPOSE WITHOUT PERMISSION OF PROJECTS ENGINEERING OPERATION

NOTICE TO PURCHASER

THIS DRAWING IS PRELIMINARY UNLESS IT BEARS CERTIFICATION OF THE GENERAL PROJECT ENGINEER

GENERAL ELECTRIC COMPANY HAS MADE EVERY EFFORT TO VERIFY ALL INFORMATION THIS DRAWING HOWEVER BECAUSE IT IS IMPOSSIBLE TO CERTIFY TO THE ACCURACY OF FURNISHED BY OUTSIDE SOURCES GENERAL ELECTRIC COMPANY MUST DISCLAIM LIABILITY DAMAGE RESULTING FROM ANY INFORMATION INCORPORATED ON THIS DRAWING WHICH INFORMATION FURNISHED BY THE CUSTOMER OTHER EQUIPMENT MANUFACTURERS TRIBUTORS IN THE EVENT OF A CONFLICT BETWEEN THE CONTRACT AND THIS DR MATERIALS AND AMOUNTS OF MATERIALS TO BE SUPPLIED BY GENERAL ELECTRIC COMPA OF THE CONTRACT SHALL GOVERN

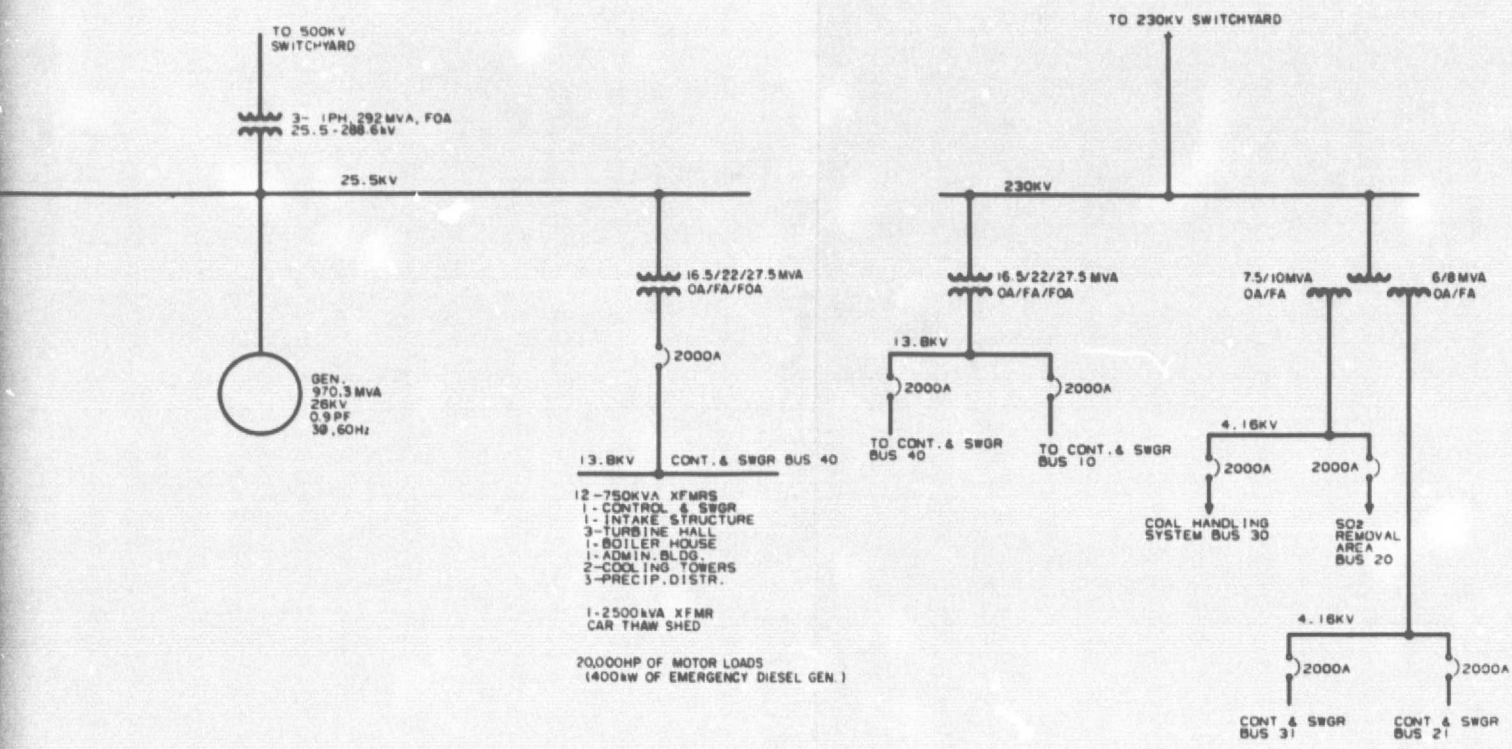

Figure 4-17. Nonreheat HSC 800 MW Base Plant, One Line Electrical Diagram

NOTICE TO PURCHASER

ELECTRICAL ONE-LINE DIAGRAM
800 MW HSC
REFERENCE FOSSIL PLANT

THERMAL ENERGY STORAGE

DOE/EPRI

GENERAL ELECTRIC
PROJECTS ENGINEERING OPERATION

3N7113T

E150

FOLDOUT FRAME

Although the detailed TES process flow diagrams of this plant are given in Figures 4-11 and 4-12, a simple TES flow schematic is also shown in Figure 4-18 for ease in understanding. The figure shows that during a charging period of 8 hours duration, cold reheat steam is condensed and subcooled by flowing through shell and tube heat exchangers. This steam has a flow rate of 1.91×10^6 kg/hr (4.2×10^6 lb/hr) at 4.93 MPa (714.7 psia) and 313.8°C (596.8°F) The subcooled condensate at 4.65 MPa (675 psia) and 217.2°C (423°F) is returned to the feedwater heater #6 of the main unit. Steam is condensed on the tube side of the shell and tube heat exchangers. Caloria HT-43 oil at 209.4°C (409°F) is pumped from the oil/rock storage tanks into the shell side of the heat exchangers and thus is heated to 256.7°C (494°F) by receiving heat from condensing steam on the tube side.

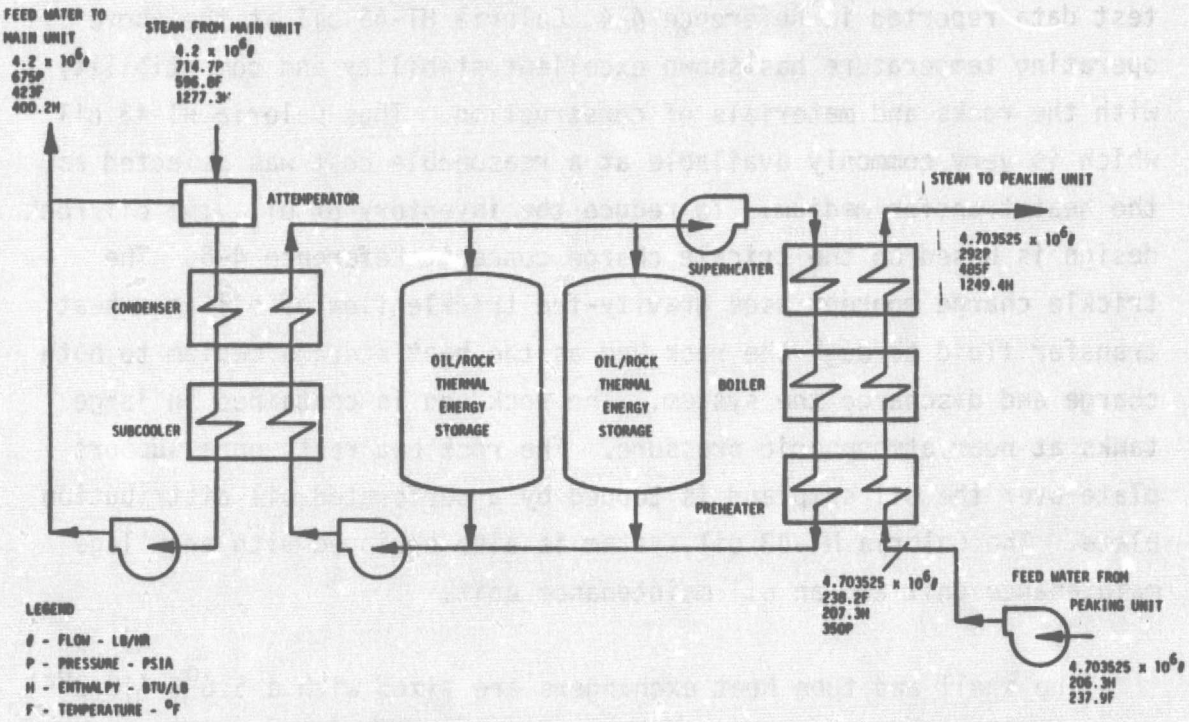

Figure 4-18. Oil/Rock Thermal Storage for Plant #1

PRECEDING PAGE BLANK NOT FILMED
PRECEDING PAGE BLANK NOT FILMED

During a discharging period of 6 hours duration, feedwater from the peaking unit feedwater heater train is pumped through the tube side of shell and tube heat exchangers termed as preheaters, boilers and superheaters and is heated to superheated steam. Feedwater flow rate from the peaking unit feedwater heater train is 2.13×10^6 kg/hr (4.7×10^6 lb/hr), 2.41 MPa (350 psia) and 114.6°C (238.2°F). Steam from the superheaters has a flow rate of 2.13×10^6 kg/hr (4.7×10^6 lb/hr) at 2.01 MPa (292 psia) and 251.7°C (485°F). Caloria HT-43 oil at 256.7°C (494°F) is pumped from the oil/rock storage tanks into the shell side of the heat exchangers and is cooled to 209.4°C (409°F) by losing heat to the feedwater on the tube side.

The oil/rock storage tanks have granite gravel packed bed, bed void volume fraction 0.25, and are filled thermocline tanks. A thermocline moves from the top of the tank to the bottom of the tank during the charging process and reverses during the discharging process. Based on test data reported in Reference 4-4, Caloria HT-43 oil at the above operating temperature has shown excellent stability and compatibility with the rocks and materials of construction. Thus Caloria HT-43 oil which is very commonly available at a reasonable cost was selected as the heat transfer medium. To reduce the inventory of oil, the oil/rock design is based on the trickle charge concept, Reference 4-5. The trickle charge concept uses gravity-fed trickle flow of oil as a heat transfer fluid through the rock bed as the heat storage medium to both charge and discharge the system. The rock bed is contained in large tanks at near atmospheric pressure. The rock bed rests on a support plate over the oil sump and is topped by a perforated oil distribution plate. The Caloria HT-43 oil system is also equipped with an ullage maintenance unit and an oil maintenance unit.

The shell and tube heat exchangers are sized with a 5.6°C (10.0°F) approach ΔT and oil to charge steam mass flow ratio of 15. To reduce the number of heat exchangers, the same heat exchangers which are used during the charging period are also used during the discharging period.

The TES system component descriptions are given in Table 4-6.

The detailed TES process flow diagram, Figure 4-11, indicates that during a charging process there are 5 identical oil/steam loops. Each loop contains 3 thermal storage tanks, 7 condensers, one subcooler and one oil pump. There are also 5 identical oil/steam loops during a discharging process as shown in the detailed TES process flow diagram Figure 4-12. Each loop contains 3 tanks, one preheater, 7 boilers, one superheater and one oil pump. Since a trickle charge concept has been used, only one tank of each loop is required to be filled with oil. Nitrogen is used to fill the voids when not occupied by oil.

The plant arrangement drawings as shown in Figure 4-7, 4-15, and 4-16 are based on drawings as documented in NUREG-0244, Volume 3, Reference 4-2. These figures indicate the modifications made such as oil/rock storage tanks, shell and tube heat exchangers, peaking turbine generator, the cross compound base steam turbine generators and the switchyard, etc., to accommodate thermal energy storage system. Figure 4-14 shows the electrical one line diagram of this plant with 3 generators. The reference NUREG HSC plant has only one generator as shown in Figure 4-17.

Plant #2 - HSC Plant with Underground Pressurized Water Storage

An artist rendering of this Plant #2 is shown in Figure 4-19, the performance is given in Table 4-7 (page 4-44) and the approximate auxiliary losses breakdown in Table 4-8 (page 4-45). This plant also has a separate peaking steam turbine and thus has a large ratio of peak to minimum power. The plant has a nonreheat steam cycle. The percentage swing is -49.02% during charging operation and +52.94% during discharging operation. The TES turnaround efficiency is .80 based on either net or gross power output.

Table 4-6

TES COMPONENT DESCRIPTIONS FOR PLANT #1-HSC PLANT WITH OIL/ROCK STORAGE

Component	Description
Thermal Storage Tank	Fifteen indentical tanks divide into 5 groups (3 tanks as a group); cylindrical tank, axis vertical, installed above ground, 45.73 m (150 ft) diameter by 12.2 m (40 ft) high, 2.0×10^4 m^3 (7.1×10^5 ft^3) volume; each containing 5.33×10^7 kg (4.42×10^4 ton) of RB gravel rock, 5.03×10^6 liters (1.33×10^6 gal.) of Caloria HT-43 oil.
Ullage Maintenance Unit	Storage and control of ullage gas storage at 1.20 MPa (175 psia); tank pressure control, venting, inert gas (nitrogen) control, volatile vapor recovery and control.
Oil Maintenance Unit	Full-flow, continuous filtration with dual 80-mesh filters in main oil line upstream of pump; periodic distillation with vacuum distillation unit inside stream to remove polymerized materials; periodic oil makeup.
Superheater	Five identical superheater units; each unit has 1990 m^2 (21,400 ft^2) heating surface; tubular heat exchanger, steam on tube side and oil on shell side.
Boiler/Condenser (B/C)	Thirty five identical boiler (condenser) units; seven units as a group for the system; each unit has 2780 m^2 (29,900 ft^2) heating surface; tubular heat exchanger, steam (water) on tube side and oil on shell side.
Preheater/Subcooler (P/S)	Five identical preheater (subcooler) units; each unit has 2883 m^2 (31,000 ft^2) heating surface; tubular heat exchanger, water on tube side and oil on shell side.
Oil Pump	Five identical pumps; centrifugal, high temperature with 2524 liters/sec (40,000 gal/min) capacity and 70.32 m (230.7 ft) TDH (water column). BHP: 2400 HP.
Recirculation Pump	One centrifugal pump with 694 liters/sec (11,000 gal/min) capacity and 70.1 m (230 ft) TDH (water column). BHP: 900 HP.
Attemperator Pump	One centrifugal pump with 63.1 liters/sec (1,000 gal/min) capacity and 56.253 (184.56 ft) TDH (water column). BHP: 46.7 HP.
Attemperator	Direct-contact mixing chamber with water injected through multiple atomizing nozzles into superheat steam.
Control Valves	48": CVOH1, CVCH2, CVOH3, CVOL1, CVOL2, CVOL3, for each group.
Piping	48" STD WT CARBON STEEL 2000 ft 24" STD WT CARBON STEEL 300 ft 20" STD WT CARBON STEEL 500 ft 18" STD WT CARBON STEEL 1500 ft 10" STD WT CARBON STEEL 500 ft 8" STD WT CARBON STEEL 500 ft 4" SCH 40 CARBON STEEL 300 ft.

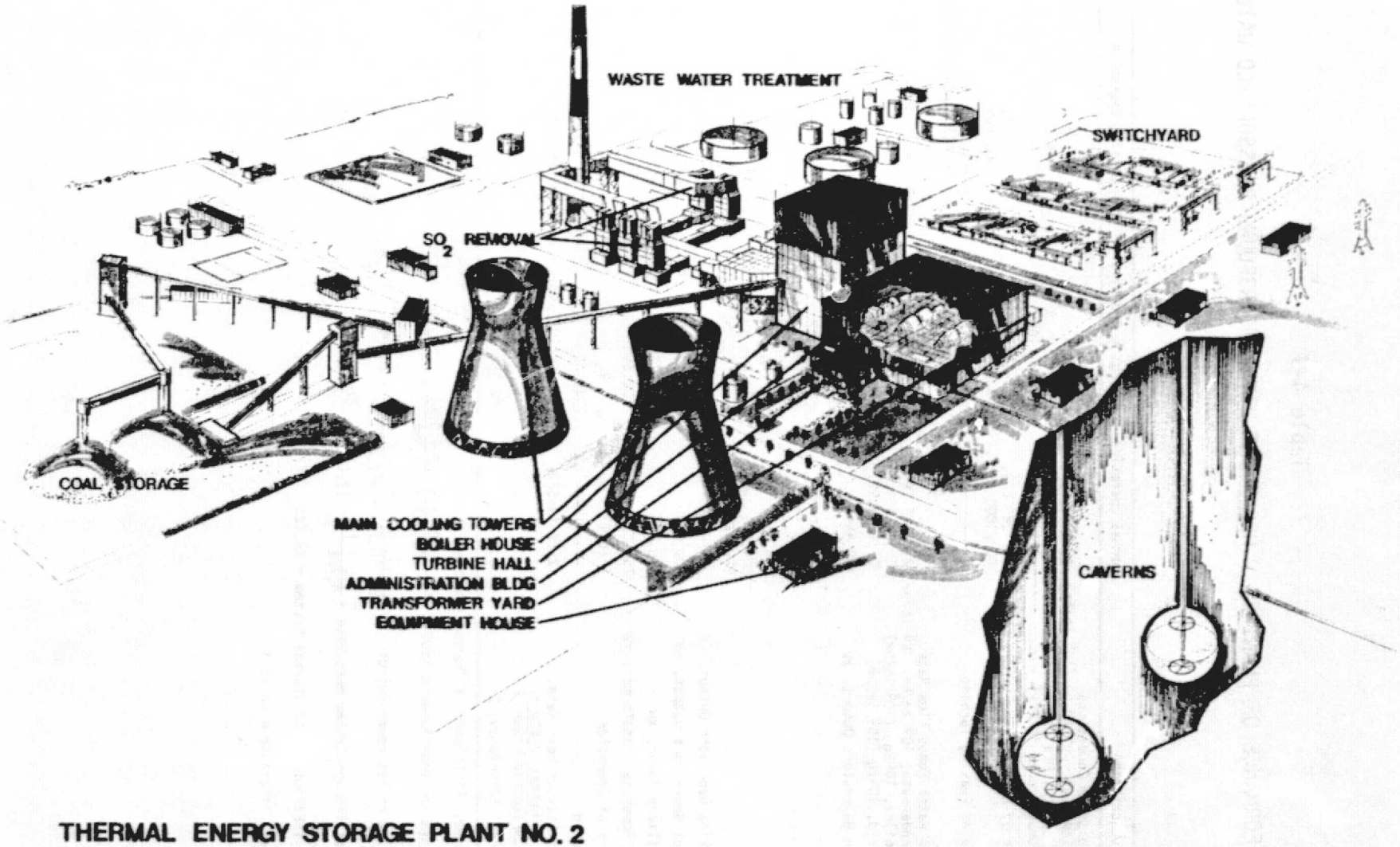

THERMAL ENERGY STORAGE PLANT NO. 2

800 MW FOSSIL STEAM PLANT WITH UNDERGROUND STORAGE

GENERAL ELECTRIC

Figure 4-19. Artist Rendering of TES Plant #2

Table 4-7

PERFORMANCE OF PLANT #2 - HSC PLANT WITH UNDERGROUND PRESSURIZED WATER STORAGE

Description	Normal Operation	Charging Operation	Discharging Operation
• Main Steam Conditions			
Flow Rate, 10^6 kg/hr (10^6 lb/hr)	3.14 (6.93)	3.14 (6.93)	3.14 (6.93)
Pressure, MPa (psia)	24.24 (3515)	24.24 (3515)	24.24 (3515)
Temperature, °C (°F)	538 (1000)	538 (1000)	538 (1000)
• Type of Main Turbine	CC4F-38" LSB, 3600/1800 rpm	CC4F-38" LSB, 3600/1800 rpm	CC4F-38" LSB, 3600/1800 rpm
• Type of Peaking Turbine	----------	----------	TC4F-38" LSB, 1800 2.45 MPa(355 psia) 223°C(433°F)
• Main Water Pumps Flow Rate			
Condensate, 10^6 kg/hr (10^6 lb/hr	2.52 (5.55)	2.38 (5.25)	2.52 (5.55)
Boiler, 10^6kg, (10^6 lb/hr)	3.14 (6.93)	3.14 (6.93)	3.14 (6.93)
Feed, 10^6kg (10^6 lb/hr)	3.14 (6.93)	3.14 (6.93)	3.14 (6.93)
• Main Generators Output, kW	468,584 kW @3600 rpm 331,416 kW @1800 rpm 800,000 kW @3" HG 809,006 kW @2-1/2" HG	338,637 kW @3600 rpm 92,410 kW @1800 rpm 431,047 kW @2" HG 439,396 kW @1-1/2" HG	468,584 kW @3600 rpm 331,416 kW @1800 rpm 800,000 kW @3" HG
• Peaking Generator Output, kW	----------	----------	408,115 kW @3" HG
• Total Generators Output, kW	809,006	439,396	1,208,115
• Auxiliary Power, kW	58,367	56,728	60,119
• Net Power to Transformer, kW	750,639	382,668	1,147,996
• Hours of Operation	10.1	8	5.9
• % Swing	----------	-49.02	+52.94
• *Net Station Heat Rate, $\frac{\text{J-Thermal}}{\text{J-Electric}} \left(\frac{\text{Btu}}{\text{kWh}}\right)$	2.84 (9,671)	5.58 (19,024)	1.85 (6,323)
• Thermal Efficiency, %	35.31	17.95	54.01

Turnaround Efficiency of Thermal Storage System:

Based on Gross Power Output $= \frac{5.9\ (1,208,115 - 809,006)}{8\ (809,006 - 439,396)} = 0.796$

Based on Net Power Output $= \frac{5.9\ (1,147,996 - 750,639)}{8\ (750,639 - 382,668)} = 0.796$

Thermal Storage System Heat Rate $= \frac{9,671.17}{0.796} = 12,145\ \frac{\text{Btu}}{\text{kWh}}$

Thermal Efficiency of Storage System = 28.12%

*Boiler Efficiency = 88.623%

Table 4-8

APPROXIMATE AUXILIARY LOSSES BREAKDOWN OF PLANT #2 - HSC PLANT WITH UNDERGROUND PRESSURIZED WATER STORAGE

Description	Losses in Horsepower		
	Normal Operation	Charging Operation	Discharging Operation
Induced Draft Fans	14,000	14,000	14,000
Forced Draft Fans	8,000	8,000	8,000
Circulating Water Pumps	12,000	12,000	12,000
Primary Air Fans	6,000	6,000	6,000
Soot Blowing Air Compressors	5,000	5,000	5,000
Auxiliary Circulating Water Pumps	800	400	1,200
Vacuum Pumps	400	200	600
Ash Sluice Pumps	400	400	400
Coal Conveyors	2,800	2,800	2,800
SO_2 Booster Fans	8,750	8,750	8,750
Coal Pulverizers	4,900	4,900	4,900
Condensate Booster Pumps	3,000	3,000	3,000
Condensate Pumps	1,050	1,050	1,050
Slurry Pumps	4,500	4,500	4,500
Quencher Pumps	2,250	2,250	2,250
Thickner Pumps	1,250	1,250	1,250
Cooling Tower Fans	3,200	1,600	4,800
Condensate Pump	--	--	150
Total Losses, H.P. (kW)	78,300 (58,367)	76,100 (56,728)	80,650 (60,119)

The plant conceptual design drawings are illustrated in Figures 4-20 through 4-22 for heat and mass balance diagrams for base cycle, charging cycle and discharging cycle respectively; Figures 4-23 and 4-24 for TES system flow diagrams for charging and discharging operation; Figure 4-25 for main steam flow diagram; Figure 4-26 for electrical one line diagram and Figures 4-27 and 4-28 for plot plan and equipment arrangement.

A simplified version of TES schematic during a charging mode and discharging mode is shown in Figure 4-29.

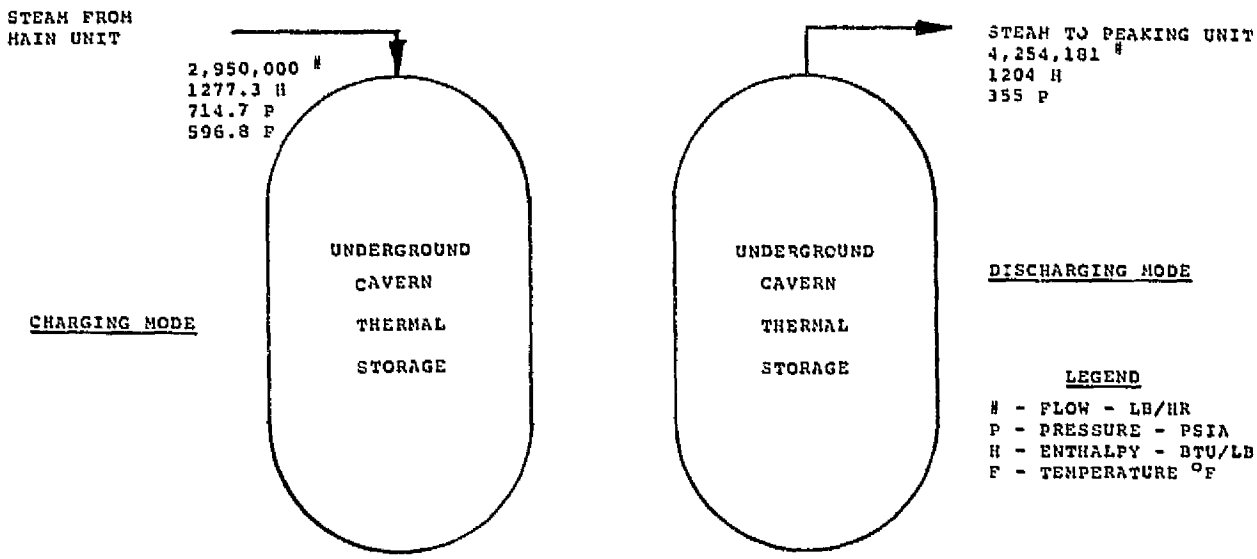

Figure 4-29. Underground Cavern Thermal Storage Schematic for Plant #2

The figure shows that during a charging period of 8 hours duration, cold reheat steam from the main unit is used to charge the caverns. This steam has a flow rate of 1.34×10^6 kg/hr (2.95×10^6 lb/hr) at 4.93 MPa (714.7 psia) and 313.8°C (596.8°F). During a discharge mode of 5.9 hours

(Text continued on Page 4-65)

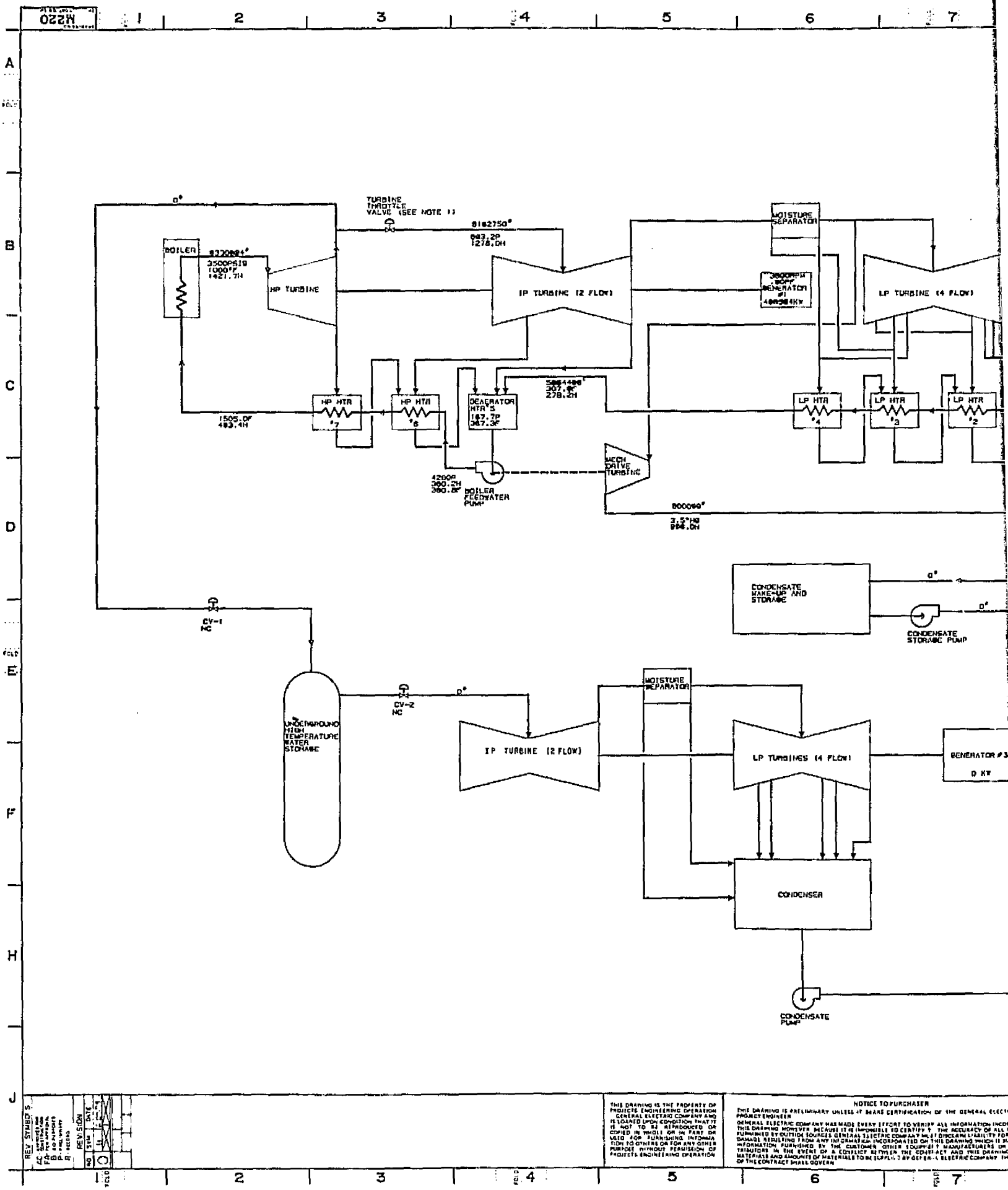

THIS DRAWING IS THE PROPERTY OF PROJECTS ENGINEERING OPERATION GENERAL ELECTRIC COMPANY AND IS LOANED UPON CONDITION THAT IT IS NOT TO BE REPRODUCED OR COPIED IN WHOLE OR IN PART OR USED FOR FURNISHING INFORMATION TO OTHERS OR FOR ANY OTHER PURPOSE WITHOUT PERMISSION OF PROJECTS ENGINEERING OPERATION

NOTICE TO PURCHASER

THIS DRAWING IS PRELIMINARY UNLESS IT BEARS CERTIFICATION OF THE GENERAL ELECTRIC PROJECT ENGINEER

GENERAL ELECTRIC COMPANY HAS MADE EVERY EFFORT TO VERIFY ALL INFORMATION INCO THIS DRAWING. HOWEVER, BECAUSE IT IS IMPOSSIBLE TO CERTIFY THE ACCURACY OF ALL I FURNISHED BY OUTSIDE SOURCES, GENERAL ELECTRIC COMPANY MUST DISCLAIM LIABILITY FOR DAMAGE RESULTING FROM ANY INFORMATION INCORPORATED ON THIS DRAWING WHICH IS S INFORMATION FURNISHED BY THE CUSTOMER, OTHER EQUIPMENT MANUFACTURERS OR TRIBUTORS. IN THE EVENT OF A CONFLICT BETWEEN THE CONTRACT AND THIS DRAWING MATERIALS AND AMOUNTS OF MATERIALS TO BE SUPPLIED BY GENERAL ELECTRIC COMPANY TH OF THE CONTRACT SHALL GOVERN

FOLDOUT FRAME

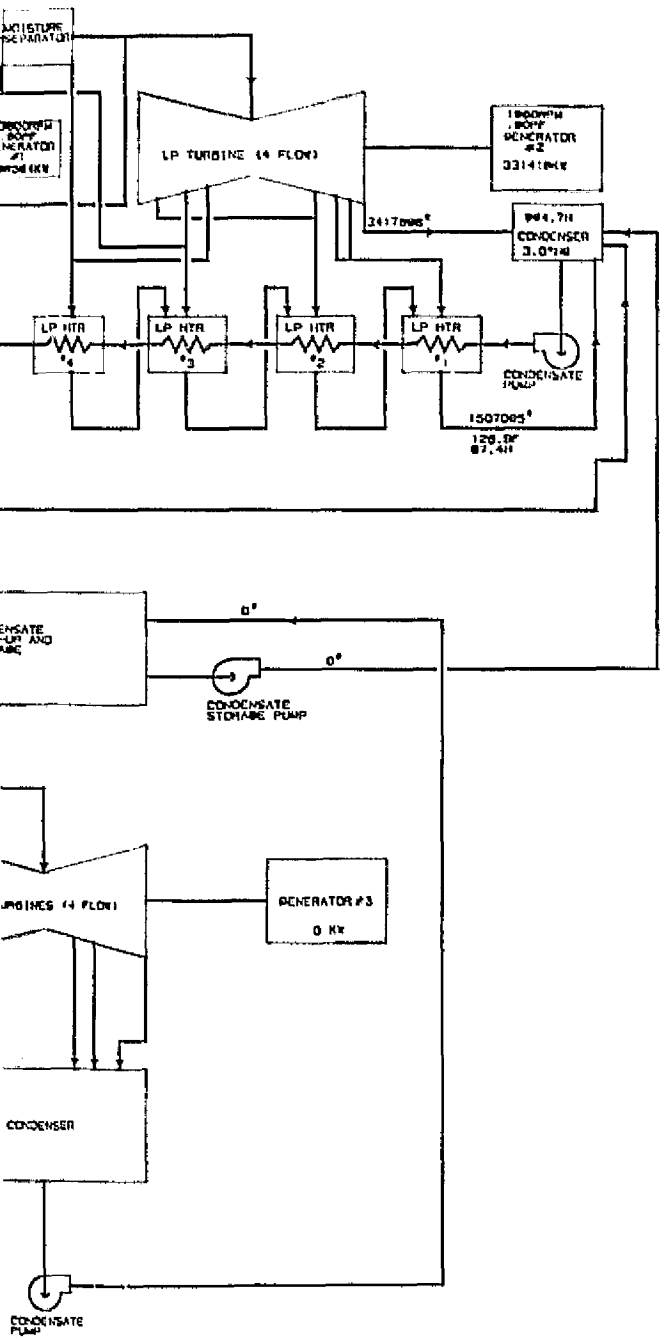

PERFORMANCE DATA

DESCRIPTION	BASE OPERATION
• MAIN STREAM CONDITIONS TO H.P. TURBINE:	
FLOW, 10^6 LB/HR	8.93
PRESSURE, PSIA	3515
TEMPERATURE, °F	1000
• TYPE OF MAIN TURBINE	TC4F-38"LSB 3600/1800 RPM
• TYPE OF PEAKING TURBINE	TC4F-38"LSB
• MAIN WATER PUMPS FLOW RATES,	
CONDENSATE, 10^6 LB/HR	8.55
FEEDWATER 10^6 LB/HR	8.93
• MAIN GENERATOR OUTPUT	499,584KW @ 3600RPM 331,416KW @ 1800RPM 800,000KW @ 3"HG
• PEAKING GENERATOR OUTPUT	————
• TOTAL GENERATORS OUTPUT, KW	800,000
• AUXILIARY POWER, KW	58,367
• NET POWER TO TRANSFORMER, KW	741,633
• HOURS OF OPERATION	10.1
• % SKING	————
• NET STATION HEAT RATE, BTU/KW-HR	9783
• THERMAL EFFICIENCY, %	35

NOTE 1: TURBINE THROTTLE VALVE IS AN INTERNAL PART OF THE LP TURBINE

LEGEND

*=FLOW-LB/HR
P=PRESSURE-PSIA
H=ENTHALPY-BTU/LB
F=TEMPERATURE-DEG.F

2 FOLDOUT FRAME

Figure 4-20. TES Plant #2, Heat and Mass Balance Numbers for Base Cycle

BASE CYCLE

NOTICE TO PURCHASER

HEAT & MASS BALANCE DIAGRAM
GOOHN BASE FOSSIL PLANT
UNDERGROUND THERMAL ENERGY STORAGE

THERMAL ENERGY STORAGE

DOE EPRI

GENERAL ELECTRIC
PROJECTS ENGINEERING OPERATION

M220

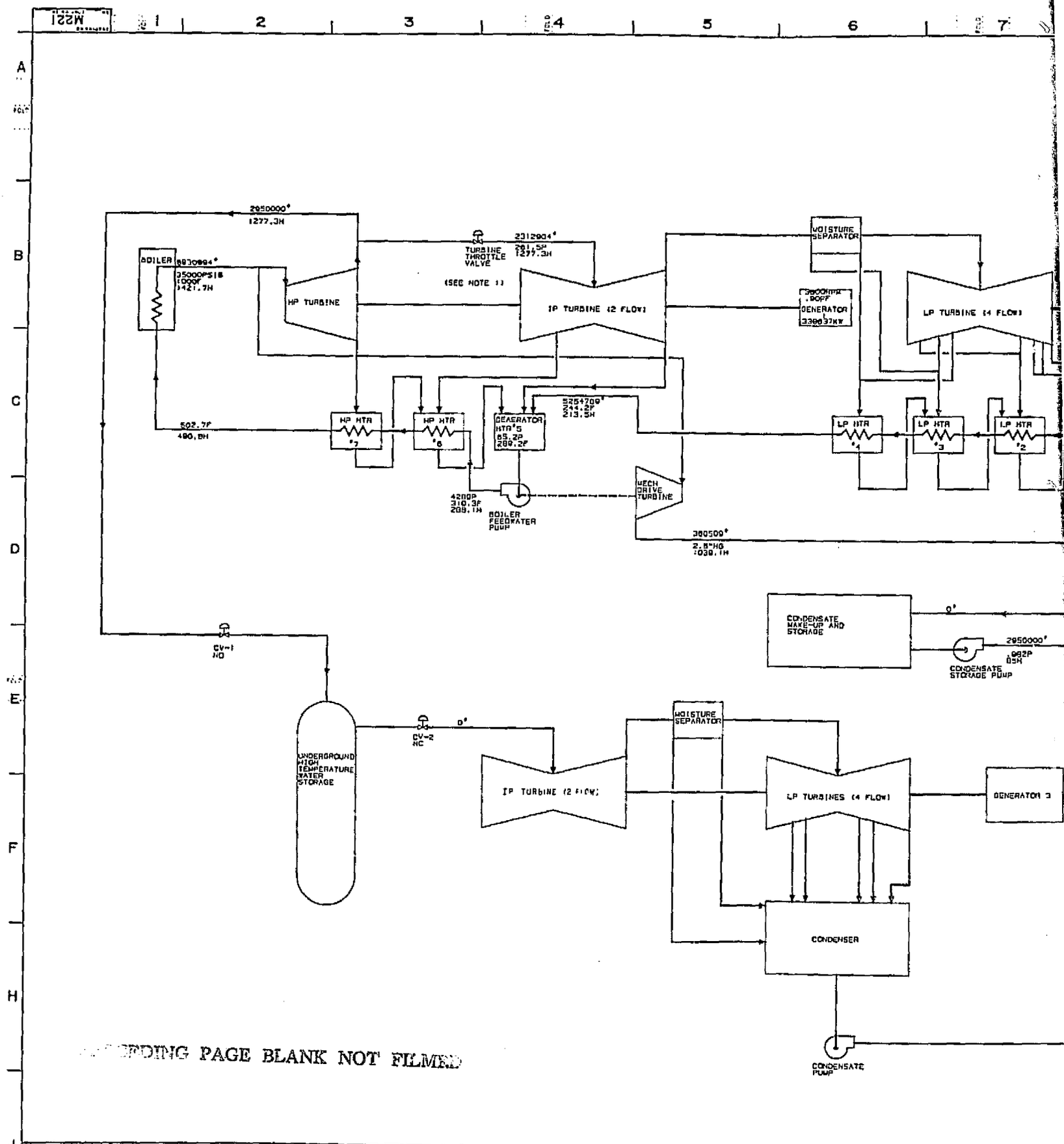

...EDING PAGE BLANK NOT FILMED

REV SYMBOLS

REVISION

NO | SH | DATE

THIS DRAWING IS THE PROPERTY OF PROJECTS ENGINEERING OPERATION GENERAL ELECTRIC COMPANY AND IS LOANED UPON CONDITION THAT IT IS NOT TO BE REPRODUCED OR COPIED IN WHOLE OR IN PART OR USED FOR FURNISHING INFORMATION TO OTHERS OR FOR ANY OTHER PURPOSE WITHOUT PERMISSION OF PROJECTS ENGINEERING OPERATION

NOTICE TO PURCHASER

THIS DRAWING IS PRELIMINARY UNLESS IT BEARS CERTIFICATION OF THE GENERAL ELECTRIC CO... PROJECT ENGINEER

GENERAL ELECTRIC COMPANY HAS MADE EVERY EFFORT TO VERIFY ALL INFORMATION INCORPORA... THIS DRAWING HOWEVER BECAUSE IT IS IMPOSSIBLE TO CERTIFY TO THE ACCURACY OF ALL INFOR... FURNISHED BY OUTSIDE SOURCES GENERAL ELECTRIC COMPANY MUST DISCLAIM LIABILITY FOR ALL ... DAMAGE RESULTING FROM ANY INFORMATION INCORPORATED ON THIS DRAWING WHICH IS SUPPLIED ... INFORMATION FURNISHED BY THE CUSTOMER OTHER EQUIPMENT MANUFACTURERS OR OTHE... TRIBUTORS IN THE EVENT OF A CONFLICT BETWEEN THE CONTRACT AND THIS DRAWING RESP... MATERIALS AND AMOUNTS OF MATERIALS TO BE SUPPLIED BY GENERAL ELECTRIC COMPANY THE PRO... OF THE CONTRACT SHALL GOVERN

FOLDOUT FRAME

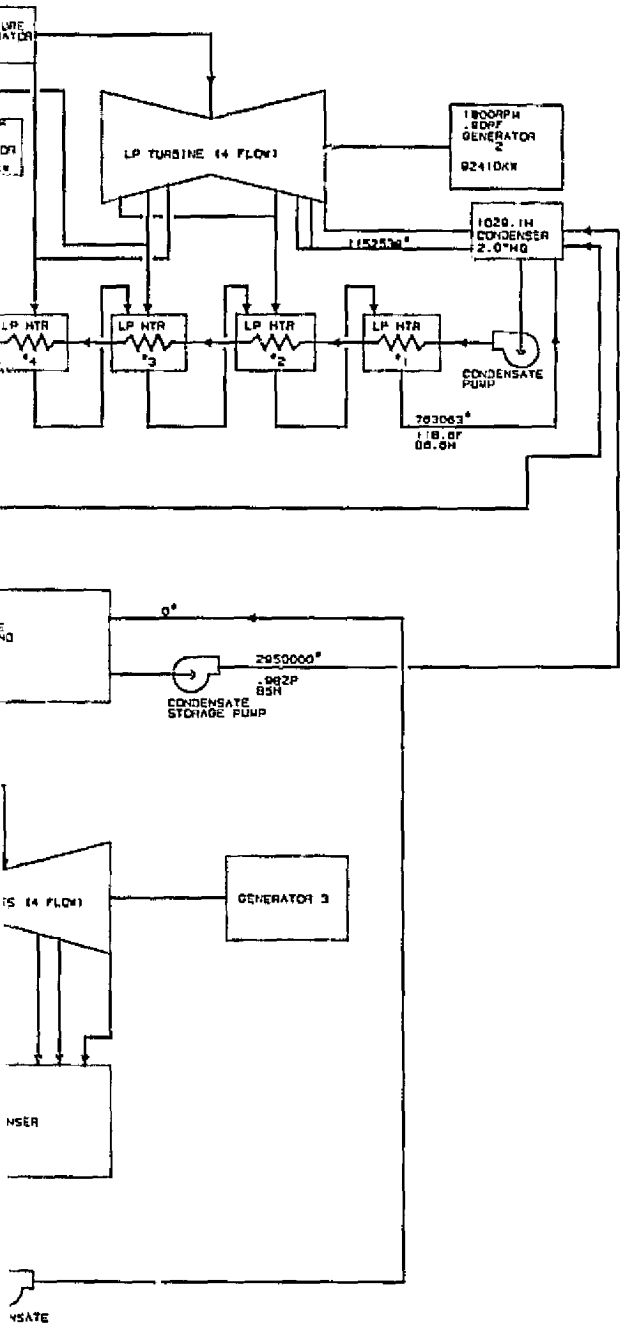

PERFORMANCE DATA

DESCRIPTION	CHARGING OPERATION
• MAIN STREAM CONDITIONS TO H.P. TURBINE	
FLOW, 10^6 LB/HR	8.03
PRESSURE, PSIA	3515
TEMPERATURE, F	1000
• TYPE OF MAIN TURBINE	CC4F-38"LSB 3600/1800 RPM
• TYPE OF PEAKING TURBINE	TC4F-38"LSB
• MAIN WATER PUMPS FLOW RATES,	
CONDENSATE, 10^6 LB/HR	8.25
FEEDWATER 10^6 LB/HR	8.03
• MAIN GENERATOR OUTPUT	338,637KW @ 3600RPM 92,410KW @ 1800RPM 431,047KW @ 2.0"HG
• PEAKING GENERATOR OUTPUT	----------
• TOTAL GENERATORS OUTPUT, KW	431,047
• AUXILIARY POWER, KW	56,728
• NET POWER TO TRANSFORMER, KW	374,319
• HOURS OF OPERATION	6
• % SWING	-40
• NET STATION HEAT RATE, BTU/KW-HR	19,433
• THERMAL EFFICIENCY, %	18

NOTE 1 TURBINE THROTTLE VALVE IS AN INTEGRAL PART OF THE IP TURBINE.

LEGEND

*=FLOW-LB/HR
P=PRESSURE-PSIA
H=ENTHALPY-BTU/LB
F=TEMPERATURE-DEG.F

Figure 4-21. TES Plant #2, Heat and Mass Balance Numbers for Charging Cycle

CHARGING CYCLE

HEAT & MASS BALANCE DIAGRAM
800MW BASE FOSSIL PLANT
UNDERGROUND THERMAL ENERGY STORAGE

GENERAL ELECTRIC
PROJECTS ENGINEERING OPERATION

530N7113

THERMAL ENERGY STORAGE

DOE EPRI

M221

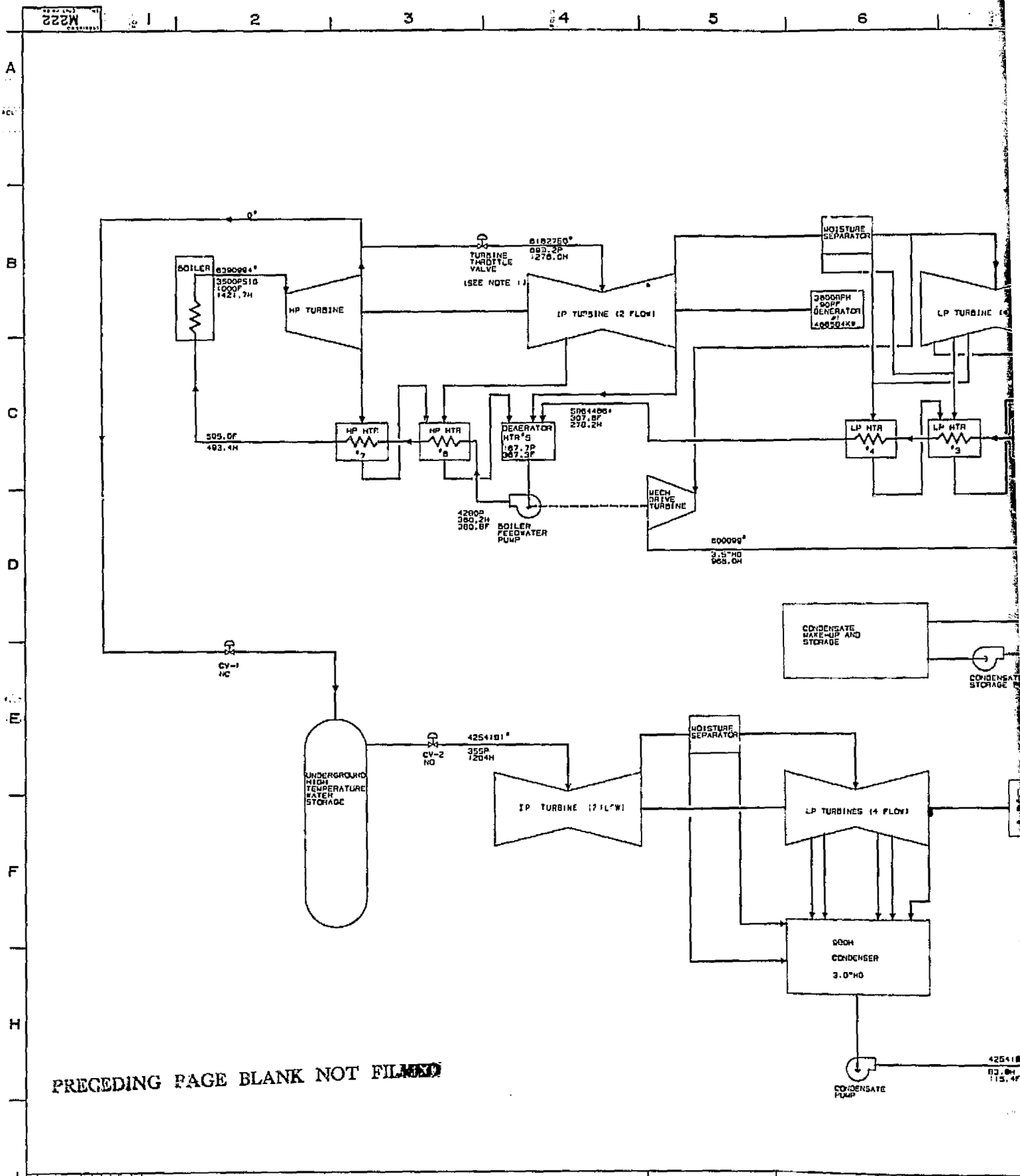

PRECEDING PAGE BLANK NOT FILMED

FOLDOUT FRAME

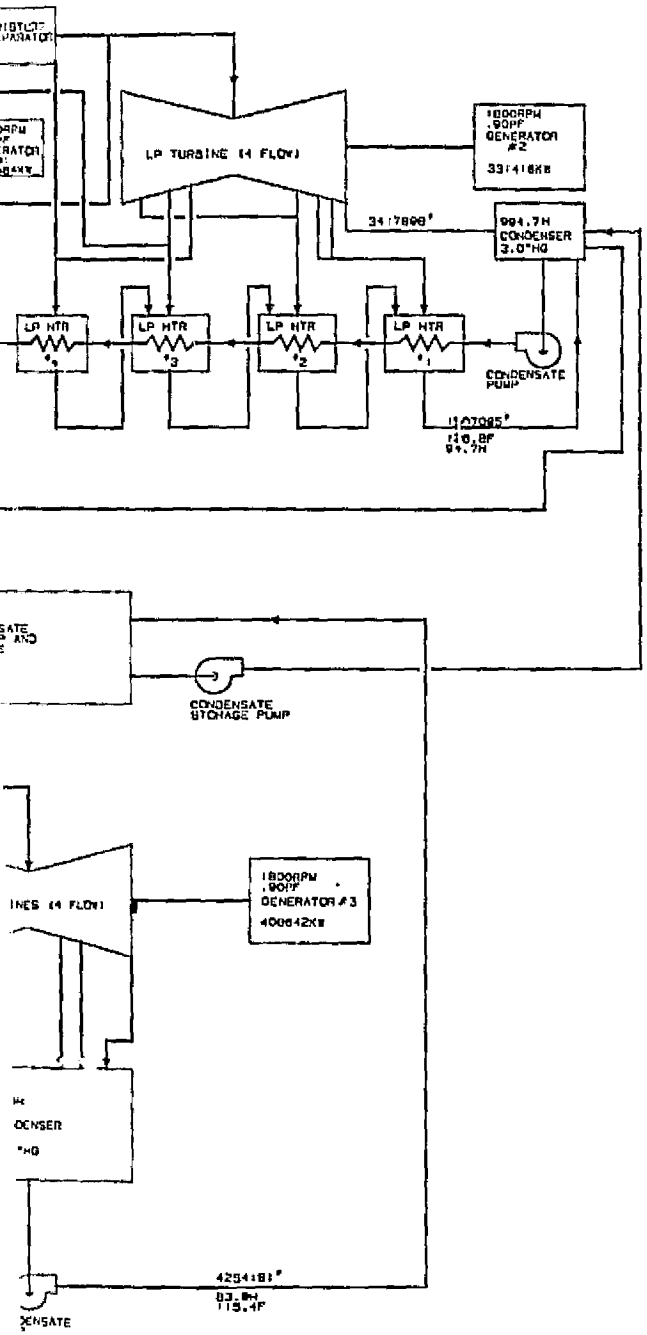

PERFORMANCE DATA

DESCRIPTION	DISCHARGING OPERATION
• MAIN STREAM CONDITIONS TO H.P. TURBINE	
FLOW, 10^6 LB/HR	8.93
PRESSURE, PSIA	3515
TEMPERATURE, °F	1000
• TYPE OF MAIN TURBINE	CC4F-38"LSB 3600/1800 RPM
• TYPE OF PEAKING TURBINE	TC4F-38"LSB 1800RPM 355PSIA, 433°F
• MAIN WATER PUMPS FLOW RATES,	
CONDENSATE, 10^6 LB/HR	5.55
FEEDWATER, 10^6 LB/HR	8.93
• MAIN GENERATOR OUTPUT	468,584KW @ 3600RPM 331,416KW @ 1800RPM 800,000KW @ 3.0"HG
• PEAKING GENERATOR OUTPUT	400,115 KW @ 3.0"HG
• TOTAL GENERATORS OUTPUT, KW	1,200,115
• AUXILIARY POWER, KW	60,119
• NET POWER TO TRANSFORMER, KW	1,147,996
• HOURS OF OPERATION	5.0
• % SWING	55
• NET STATION HEAT RATE, BTU/KW-HR	6482
• THERMAL EFFICIENCY, %	53

NOTE 1: TURBINE THROTTLE VALVE IS AN INTEGRAL PART OF IP TURBINE.

LEGEND

F=FLOW-LB/HR
P=PRESSURE-PSIA
H=ENTHALPY-BTU/LB
F=TEMPERATURE-DEG.F

Figure 4-22. TES Plant #2, Heat and Mass Balance Numbers for Discharging Cycle

DISCHARGING CYCLE

NOTICE TO PURCHASER

HEAT & MASS BALANCE DIAGRAM
800MW BASE FOSSIL PLANT
UNDERGROUND THERMAL ENERGY STORAGE

THERMAL ENERGY STORAGE

DOE/EPRI

GENERAL ELECTRIC
PROJECTS ENGINEERING OPERATION

M222

FOLDOUT FRAME 2

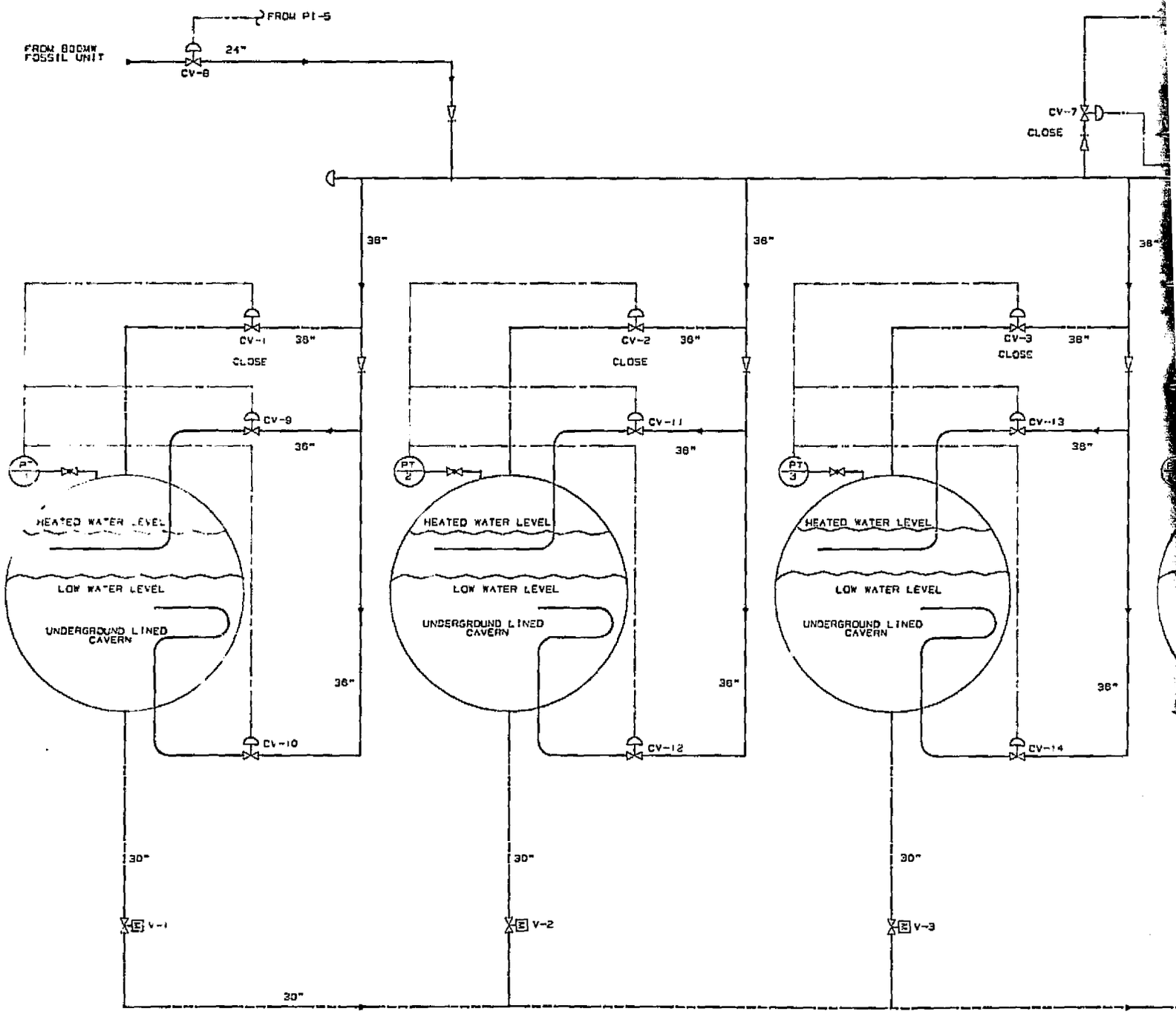

PRECEDING PAGE BLANK NOT FILMED

FOLDOUT FRAME 1

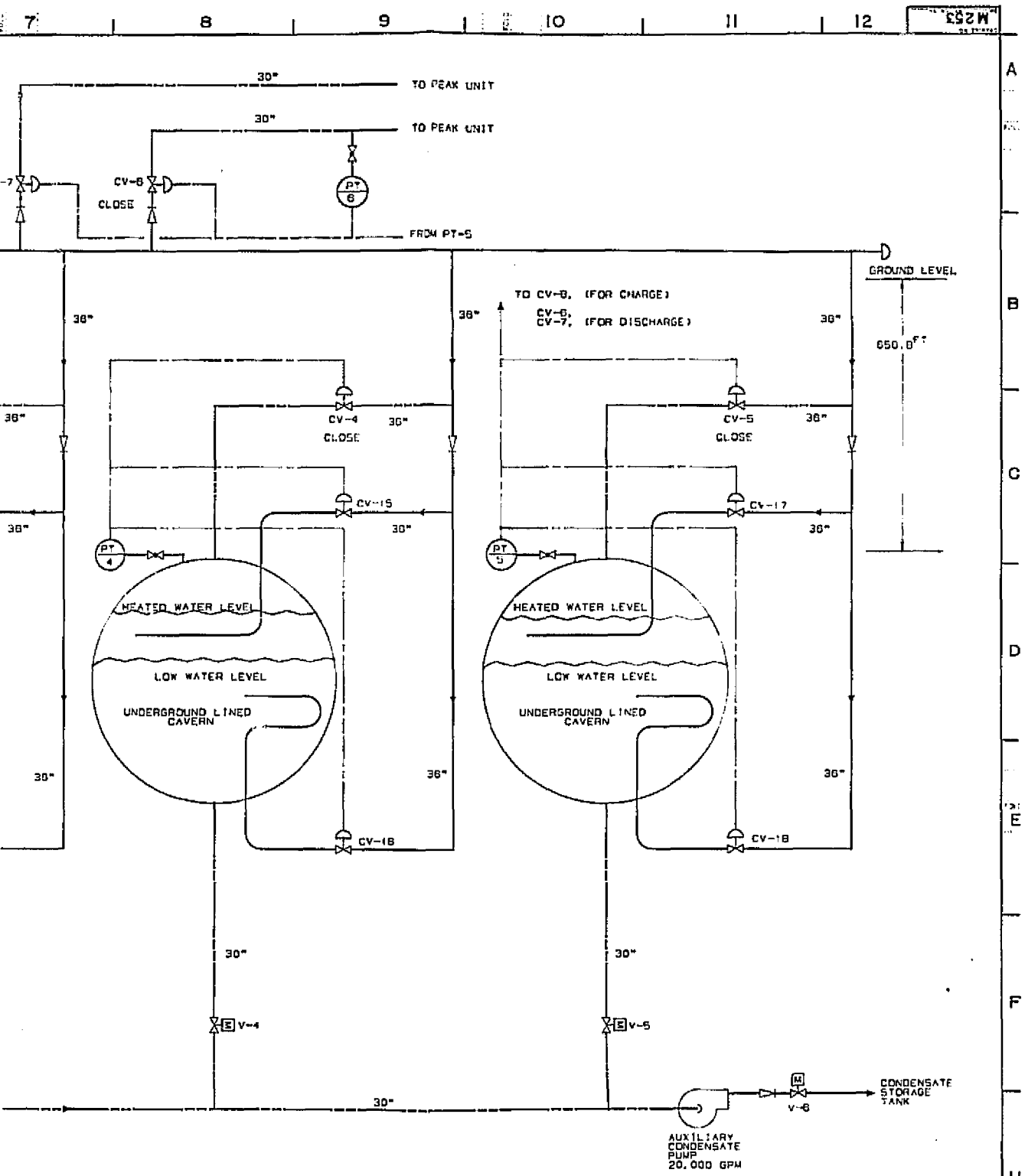

Figure 4-23. TES Plant #2, Thermal Storage System Flow Diagram - Charging Operation

CHARGING OPERATION

PRELIMINARY

ALN/CAD

NONE

STORAGE SYSTEM FLOW DIAGRAM
800MW BASE FOSSIL PLANT
WITH UNDERGROUND STORAGE

DUAL MEDIA THERMAL ENERGY STORAGE

GENERAL ELECTRIC
PROJECTS ENGINEERING OPERATION

M253

FOLDOUT FRAME 2

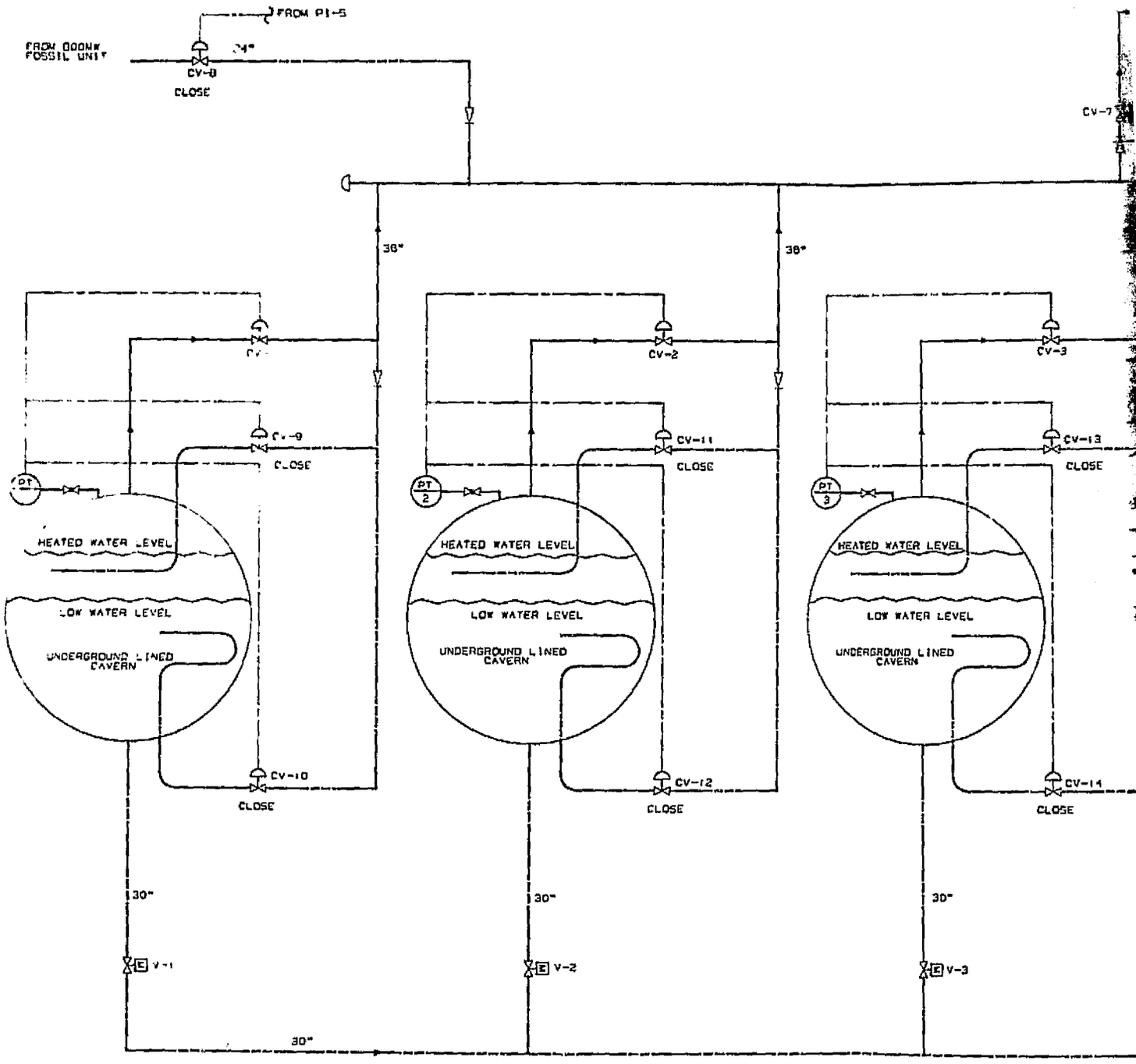

FOLDOUT FRAME

PRECEDING PAGE BLANK NOT FILMED

REV SYMBOLS

REVISION

THIS DRAWING IS THE PROPERTY OF PROJECTS ENGINEERING OPERATION - GENERAL ELECTRIC COMPANY AND IS LOANED UPON CONDITION THAT IT IS NOT TO BE REPRODUCED OR COPIED IN WHOLE OR IN PART OR USED FOR FURNISHING INFORMATION TO OTHERS OR FOR ANY OTHER PURPOSE WITHOUT PERMISSION OF PROJECTS ENGINEERING OPERATION

NOTICE TO PURCHASER

THIS DRAWING IS PRELIMINARY UNLESS IT BEARS CERTIFICATION OF THE MANUFACTURING PROJECT ENGINEER

GENERAL ELECTRIC COMPANY HAS MADE EVERY EFFORT TO VERIFY ALL INFORMATION ON THIS DRAWING HOWEVER BECAUSE IT IS IMPOSSIBLE TO CERTIFY TO THE ACCURACY OF INFORMATION FURNISHED BY OUTSIDE SOURCES GENERAL ELECTRIC COMPANY MUST DISCLAIM LIABILITY FOR DAMAGE RESULTING FROM ANY INFORMATION INCORPORATED ON THIS DRAWING INFORMATION FURNISHED BY THE CUSTOMER OTHER EQUIPMENT MANUFACTURERS OR CONTRIBUTORS IN THE EVENT OF A CONFLICT BETWEEN THE CONTRACT AND THE MATERIALS AND AMOUNTS OF MATERIALS TO BE SUPPLIED BY GENERAL ELECTRIC OF THE CONTRACT SHALL GOVERN

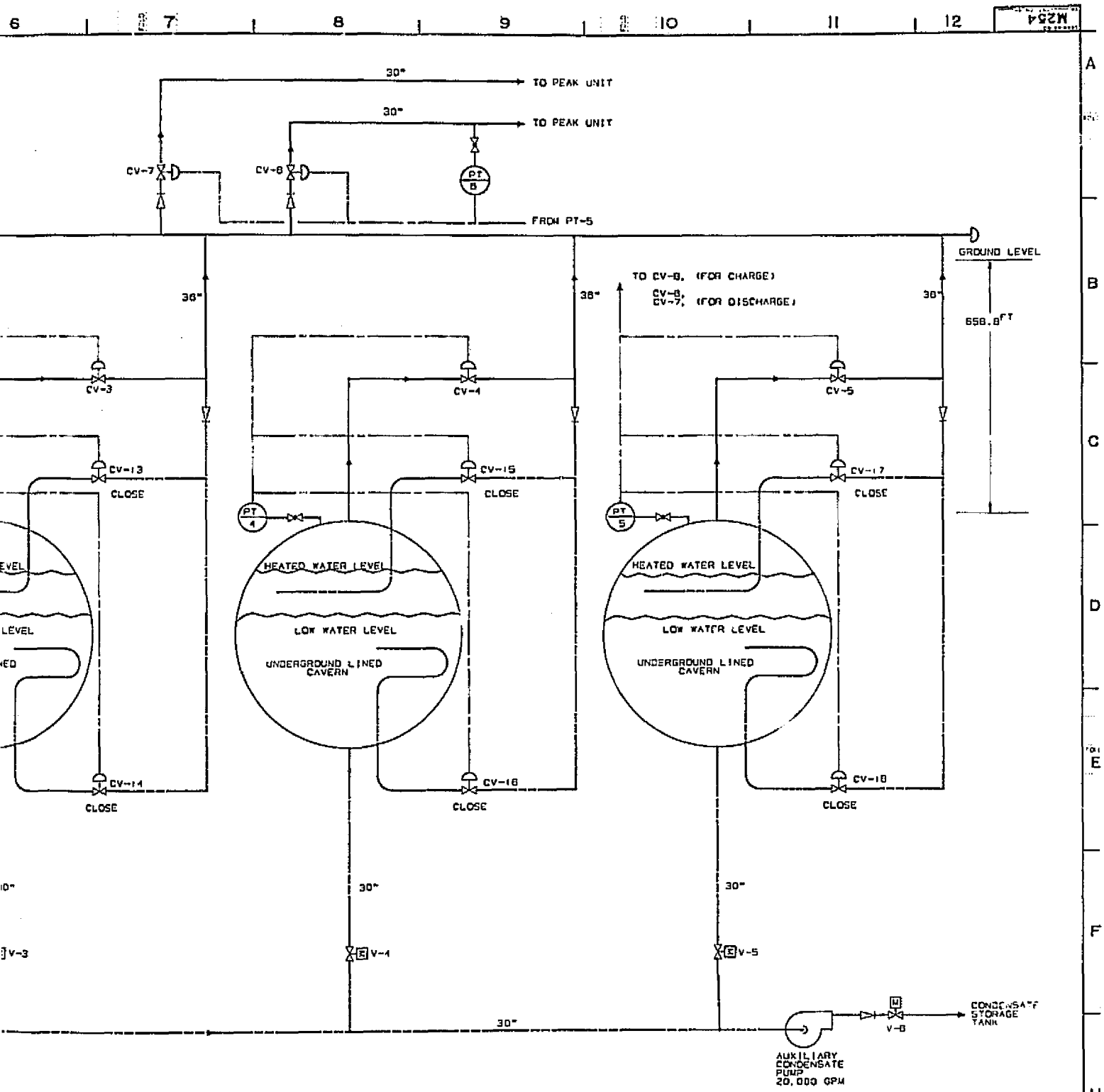

Figure 4-24. TES Plant #2 - Thermal Storage System Flow Diagram - Discharging Operation

DISCHARGING OPERATION

PRELIMINARY

NOTICE TO PURCHASER

ALN/CAD

NONE

STORAGE SYSTEM FLOW DIAGRAM
BOONE BASE FOSSIL PLANT
WITH UNDERGROUND STORAGE

DUAL MEDIA THERMAL ENERGY STORAGE

JOE/EPRI

GENERAL ELECTRIC
PROJECTS ENGINEERING OPERATION
INSTALLATION AND SERVICE ENGINEERING DIVISION
SCHENECTADY N.Y. U.S.A.

M254

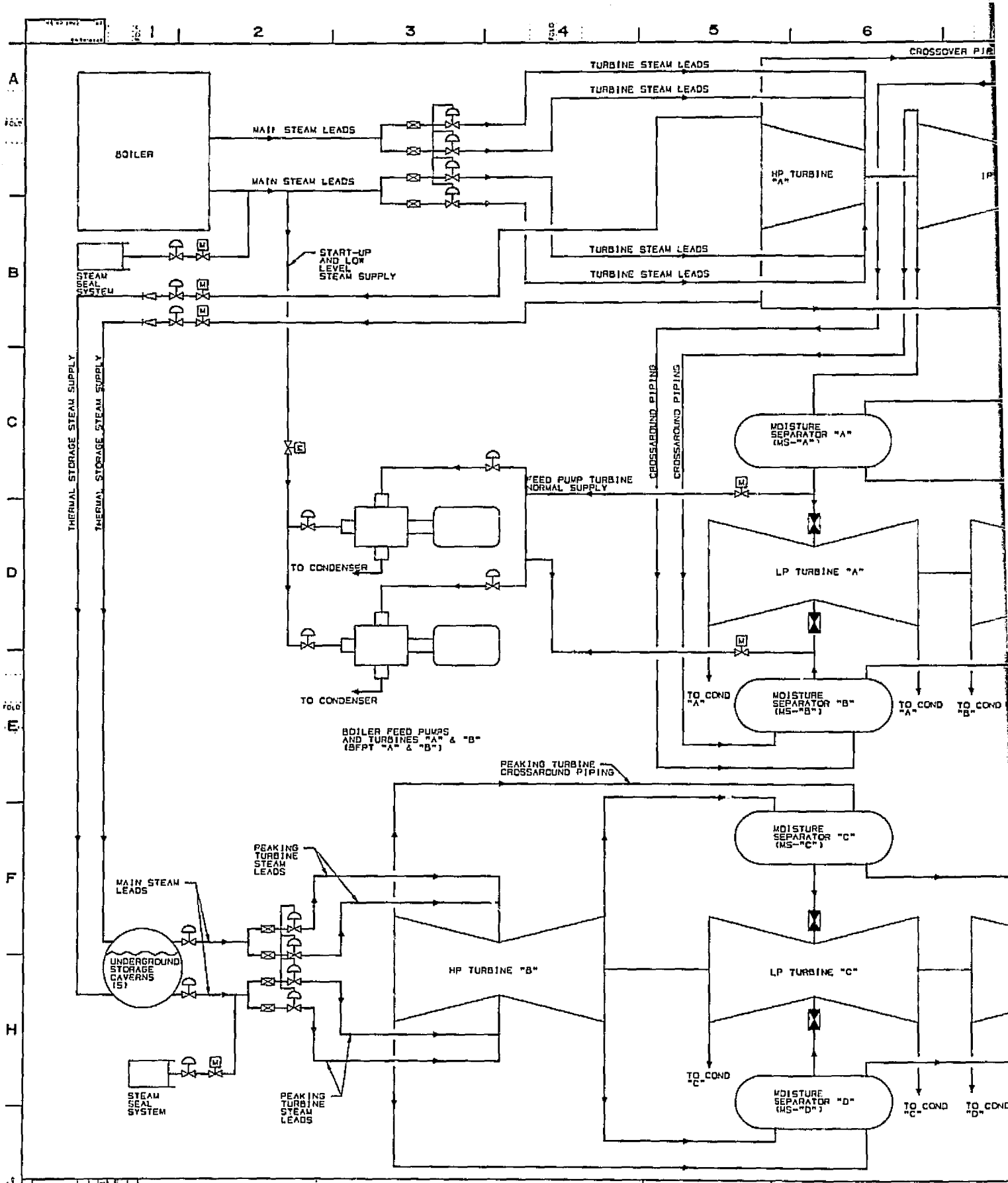

ORIGINAL PAGE IS OF POOR QUALITY

PRECEDING PAGE BLANK NOT FILMED

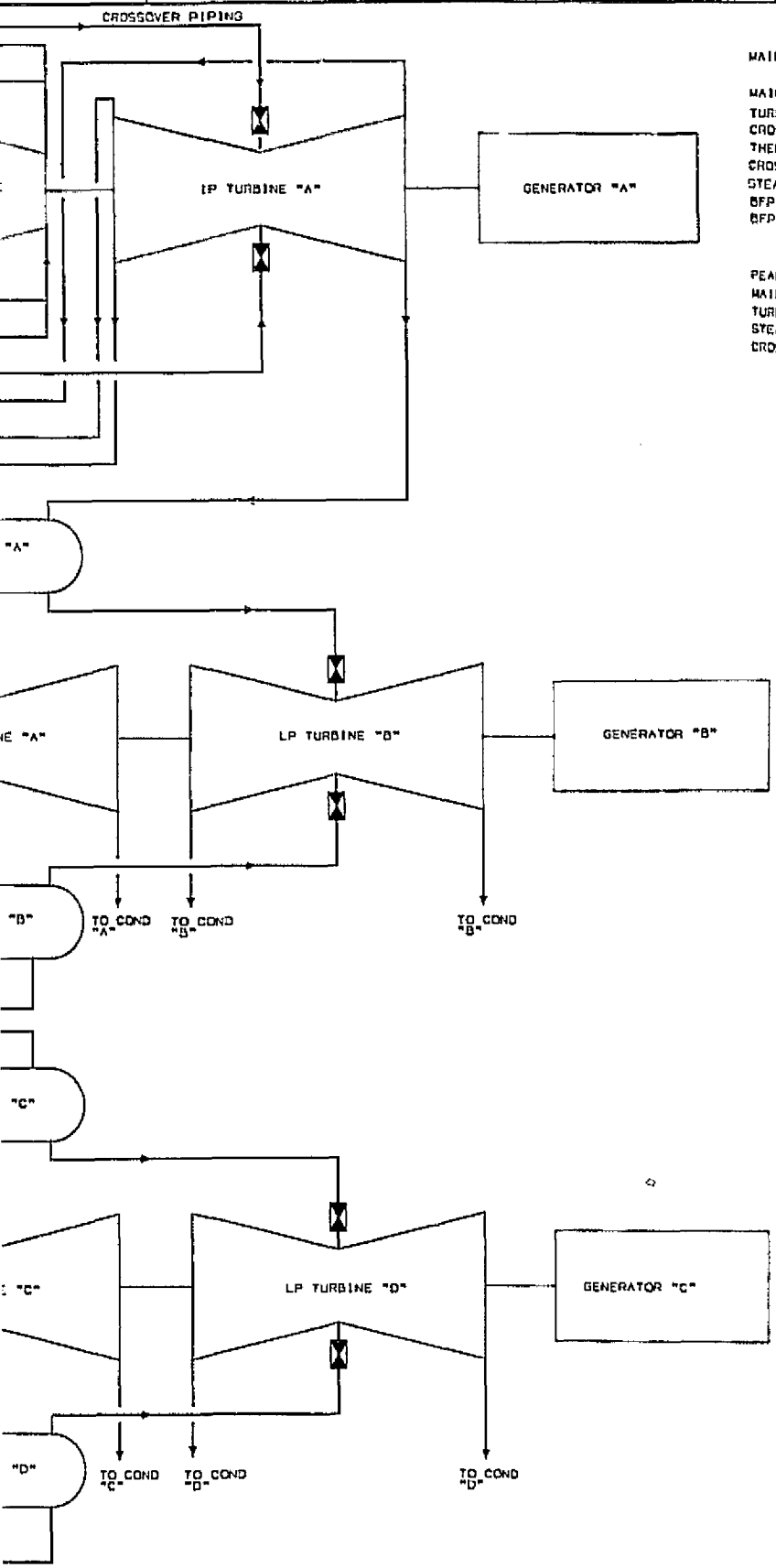

TYPICAL PIPING SIZES AND MATERIALS

MAIN TURBINE

LOCATION	MATERIALS	NO.-SIZE
MAIN STEAM LEADS-2 1/4CR-1MO		(2)-30"OD-8"WALL TO(4)-20"OD-4.25"WALL
TURBINE STEAM LEADS-2 1/4CR-1MO		(4)-20"OD-4.25"WALL
CROSSOVER PIPING-CARBON STEEL		(2)-36"OD-1.5"WALL
THERMAL STORAGE SUPPLY-CARBON STEEL		(2)-30"OD-1.25"WALL
CROSSAROUND PIPING-NI-CR-CU ALLOY		(4)-40"OD-0.625"WALL
STEAM SEAL SYSTEM-2 1/4CR-1MO		(1)-6"OD-0.864"WALL
BFPT START-UP SUPPLY-2 1/4CR-1MO		(1)-8"OD-0.906" TO (2)-10"OD-1.125"WALL
BFPT NORMAL SUPPLY-CARBON STEEL		(2)-10"OD-0.850"WALL

PEAKING TURBINE

MAIN STEAM LEADS-CARBON STEEL	(2)-40"OD-0.875"WALL TO (4)-30"OD-0.625"WALL
TURBINE STEAM LEADS-CARBON STEEL	(4)-30"OD-0.625"WALL
STEAM SEAL SYSTEM-CARBON STEEL	(1)-8"OD-0.322"WALL
CROSSAROUND PIPING-NI-CR-CU ALLOY	(4)-44"OD-0.375"WALL

LEGEND

- CONTROL VALVE
- CHECK VALVE
- MOTOR OPERATED VALVE
- MAIN STEAM STOP VALVE
- COMBINED INTERMEDIATE VALVE

Figure 4-25. TES Plant #2, Main Steam Flow Diagram

PLANT #2

NOTICE TO PURCHASER

ALN/CAD

NONE

MAIN STEAM FLOW DIAGRAM
600MW BASE FOSSIL PLANT
UNDERGROUND THERMAL ENERGY STORAGE

THERMAL ENERGY STORAGE

DOE/EPRI

GENERAL ELECTRIC
PROJECTS ENGINEERING OPERATION

M271

FOLDOUT FRAME

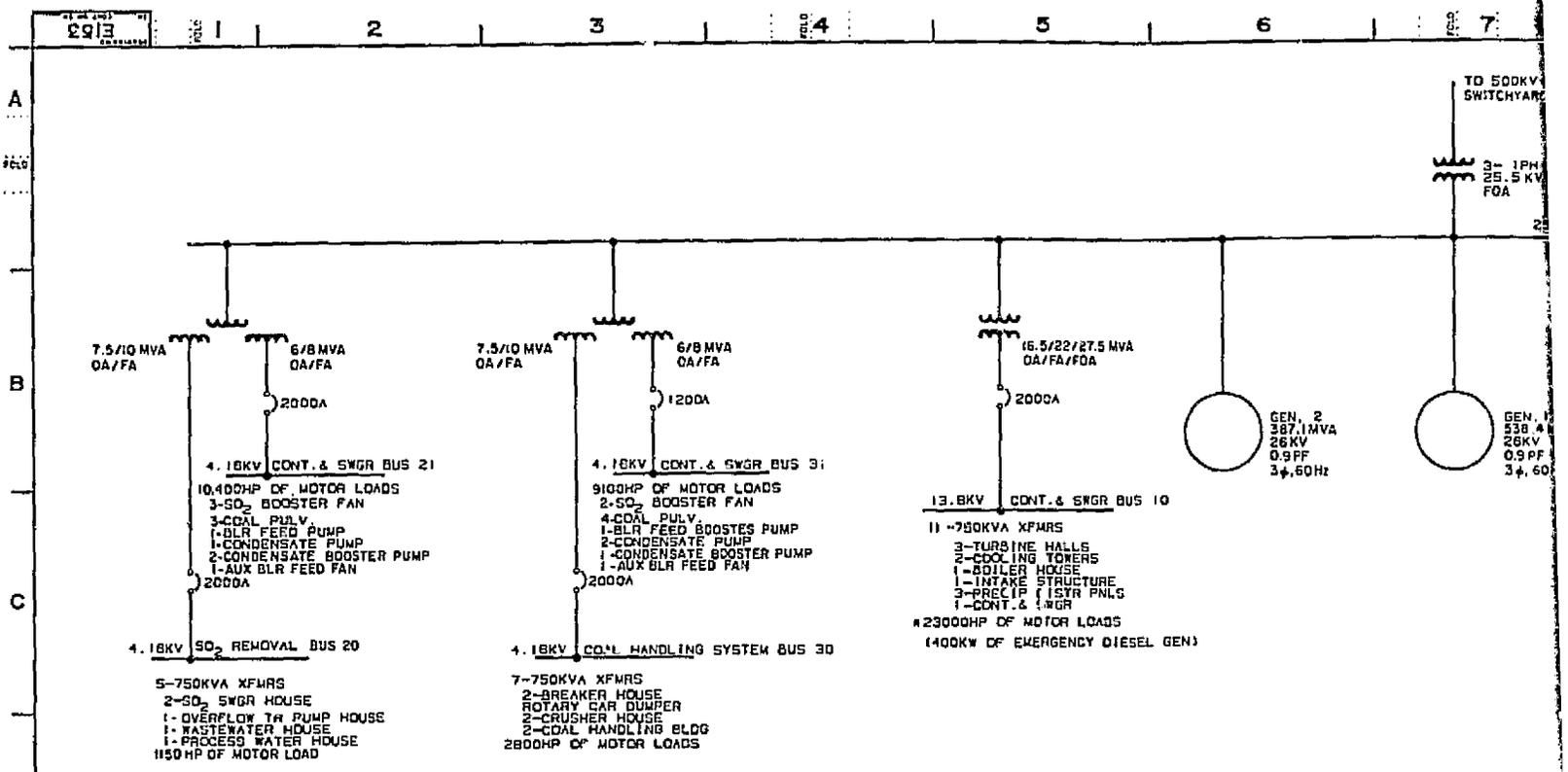

PRECEDING PAGE BLANK NOT FILMED

THIS DRAWING IS THE PROPERTY OF PROJECTS ENGINEERING OPERATION GENERAL ELECTRIC COMPANY AND IS LOANED UPON CONDITION THAT IT IS NOT TO BE REPRODUCED OR COPIED IN WHOLE OR IN PART OR USED FOR FURNISHING INFORMATION TO OTHERS OR FOR ANY OTHER PURPOSE WITHOUT PERMISSION OF PROJECTS ENGINEERING OPERATION

NOTICE TO PURCHASER

THIS DRAWING IS PRELIMINARY UNLESS IT BEARS CERTIFICATION OF THE GENERAL ELEC PROJECT ENGINEER

GENERAL ELECTRIC COMPANY HAS MADE EVERY EFFORT TO VERIFY ALL INFORMATION INCL THIS DRAWING HOWEVER BECAUSE IT IS IMPOSSIBLE TO CERTIFY TO THE ACCURACY OR AL FURNISHED BY OUTSIDE SOURCES, GENERAL ELECTRIC COMPANY MUST DISCLAIM LIABILITY A DAMAGE RESULTING FROM ANY INFORMATION INCORPORATED ON THIS DRAWING WHICH IS INFORMATION FURNISHED BY THE CUSTOMER, OTHER EQUIPMENT MANUFACTURERS OR TRACTORS. IN THE EVENT OF A CONFLICT BETWEEN THE CONTRACT AND THIS DRAWING MATERIALS AND AMOUNTS OF MATERIALS TO BE SUPPLIED BY GENERAL ELECTRIC COMPANY, THE OF THE CONTRACT SHALL GOVERN

FOLDOUT FRAME

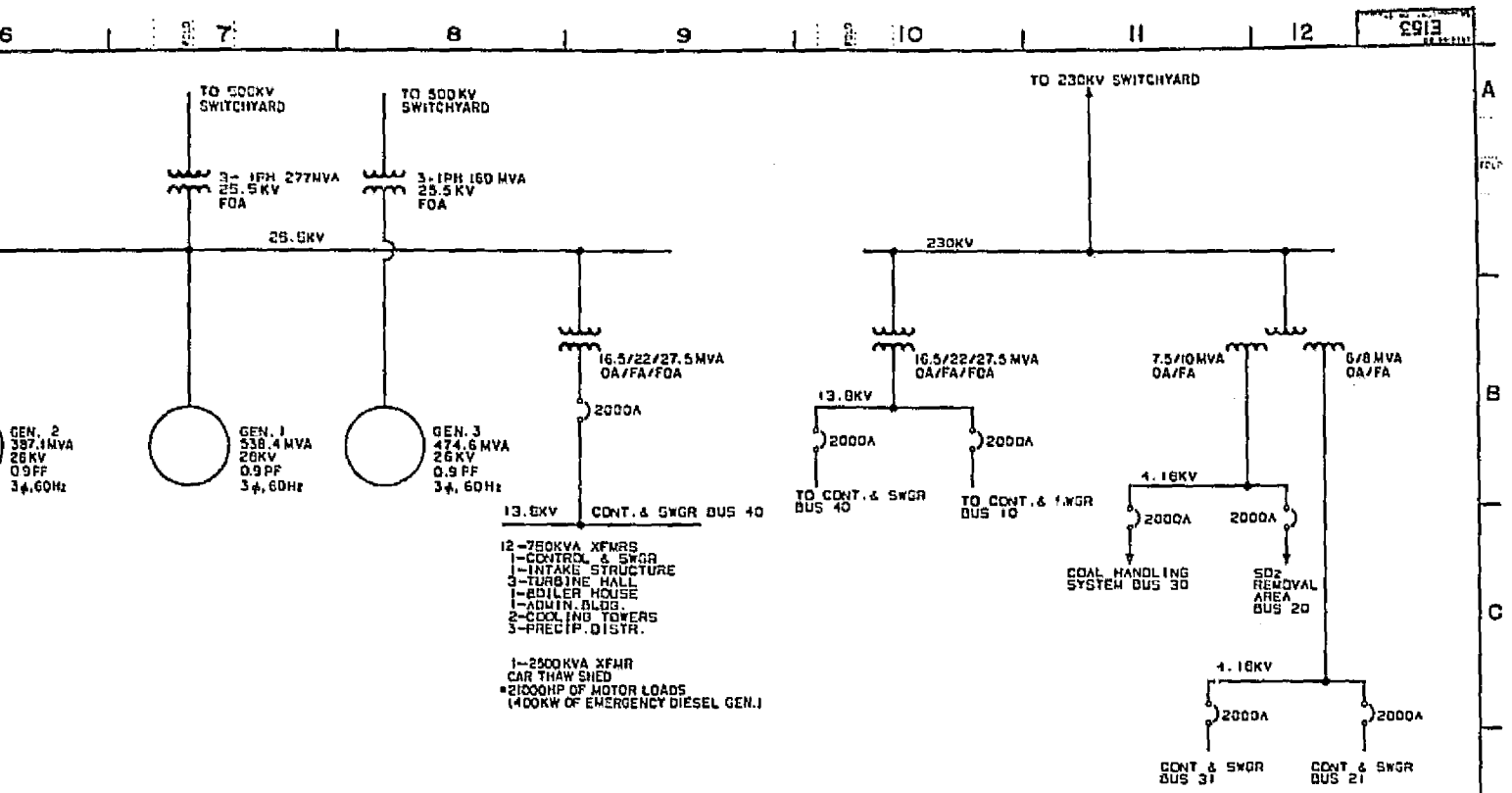

* INCLUDES 1000HP FOR TES AUXILIARIES

Figure 4-26. TES Plant #2, One Line Electrical Diagram

NOTICE TO PURCHASER

ELECTRICAL ONE-LINE DIAGRAM
800 MW BASE FOSSIL PLANT
WITH UNDERGROUND STORAGE

THERMAL ENERGY STORAGE

DOE / EPRI

GENERAL ELECTRIC
PROJECTS ENGINEERING OPERATION
INSTALLATION AND SERVICE ENGINEERING DIVISION
SCHENECTADY, N.Y. USA

3N7113 E153

FOLDOUT FRAME 2

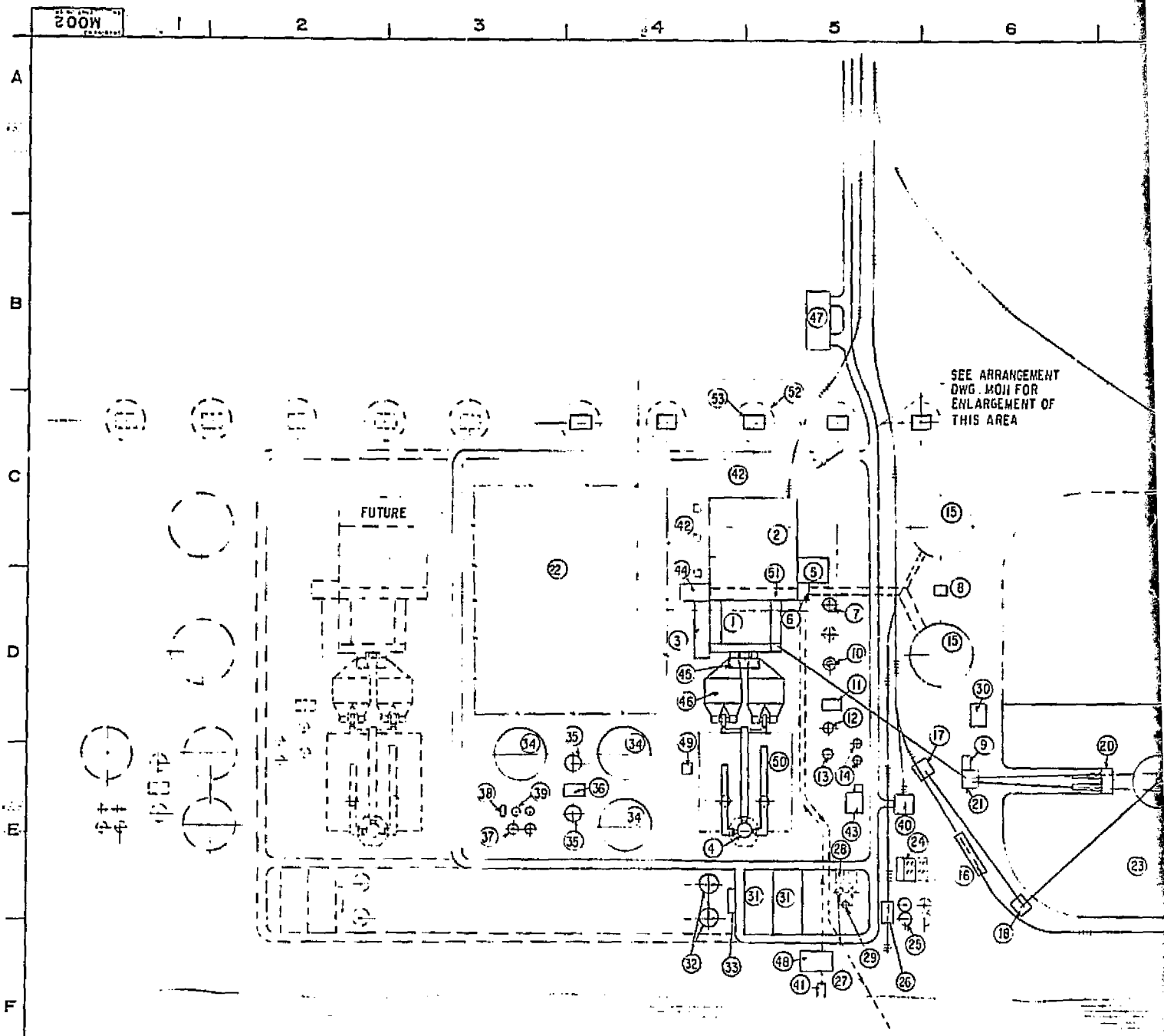

ORIGINAL PAGE IS
OF POOR QUALITY

PRECEDING PAGE BLANK NOT FILMED

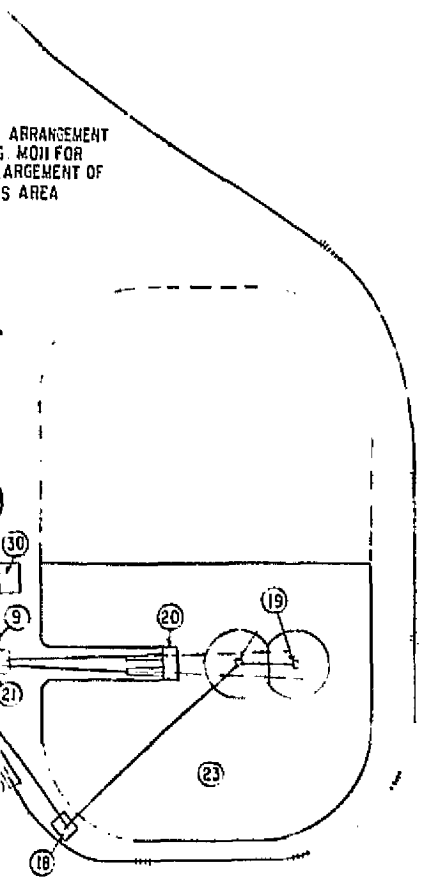

PLANT NOMENCLATURE

1 -BOILER HOUSE
2 -TURBINE HALL
3 -SERVICE AREA
4 -STACK
5 -ADMINISTRATION BUILDING
6 -CIRCULATING WATER PUMP HOUSE
7 -CONDENSATE STORAGE TANK
8 -COOLING TOWER SWITCHGEAR BUILDING
9 -COAL HANDLING SYSTEM SWITCHGEAR BUILDING
10 -FUEL OIL TANK
11 -BATCH WASTE SUMP
12 -RECIRCULATING TANK
13 -SETTLING TANK
14 -DEWATERING BINS
15 -MAIN COOLING TOWERS
16 -CAR THAW SHED
17 -ROTARY CAR DUMPER
18 -BREAKER HOUSE
19 -LOWERING WELLS
20-PLOW MAINTENANCE SHED
21-CRUSHER HOUSE
22-SWITCHYARD
23-COAL PILE (60 DAY STORAGE)
24-LIME SLAKING & SERVICE BUILDING
25-LIME STORAGE SILOS
26-LIME UNLOADING BUILDING & TUNNEL
27-PROCESS WATER SURGE TANK
28-PROCESS & SEAL WATER PUMP HOUSE
29-SEAL WATER TANK
30-COAL PILE SETTLING BASIN
31-WASTE WATER SETTLING BASINS
32-BATCH HOLDING TANKS
33-WASTE WATER TREATMENT BUILDING
34-THICKENERS
35-THICKENER OVERFLOW TANKS
36-THICKENER EQUIPMENT BUILDING
37-UNDERFLOW SURGE TANKS
38-SLUDGE PUMP HOUSE
39-FLY ASH SILOS
40-LOCOMOTIVE REPAIR SHOP
41-MAKEUP WATER INTAKE STRUCTURE / FIRE PUMP HOUSE
42-TRANSFORMER YARD
43-MATERIAL HANDLING & SERVICE / SWITCHGEAR BUILDING
44-CONTROL & SWITCHGEAR AREA
45-SECONDARY AIR PREHEATERS
46-PRECIPITATORS
47-WAREHOUSE
48-MAKEUP WATER PRETREATMENT BUILDING
49-SO_2 CONTROL & SWITCHGEAR BUILDING
50-SO_2 REMOVAL AREA
51-AUXILIARY BAY
52-CAVERNS
53-EQUIPMENT HOUSE

NOTE:
PLOT PLAN IS BASED ON DRAWINGS PREPARED FOR THE NUCLEAR REGULATORY REGULATORY COMMISSION UNDER CONTRACT NO. AT (49-24)-0351 AND THE U.S DEPARTMENT OF ENERGY UNDER CONTRACT NO. EY-76-C-02-2477 BY UNITED ENGINEERS & CONSTRUCTORS INC.

0 100 200 300 400 500 1000

SCALE 1" = 200'

Figure 4-27. Plant #2, Plot Plan

PRELIMINARY

NOTICE TO PURCHASER
PRELIMINARY UNLESS IT BEARS CERTIFICATION OF THE GENERAL ELECTRIC COMPANY

SCALE 1" = 200'

PLOT PLAN / PLANT NO. 2
800 MW BASE FOSSIL PLANT
WITH CAVERNS

THERMAL ENERGY STORAGE

GENERAL ELECTRIC
PROJECTS ENGINEERING OPERATION

M002

FOLDOUT FRAME

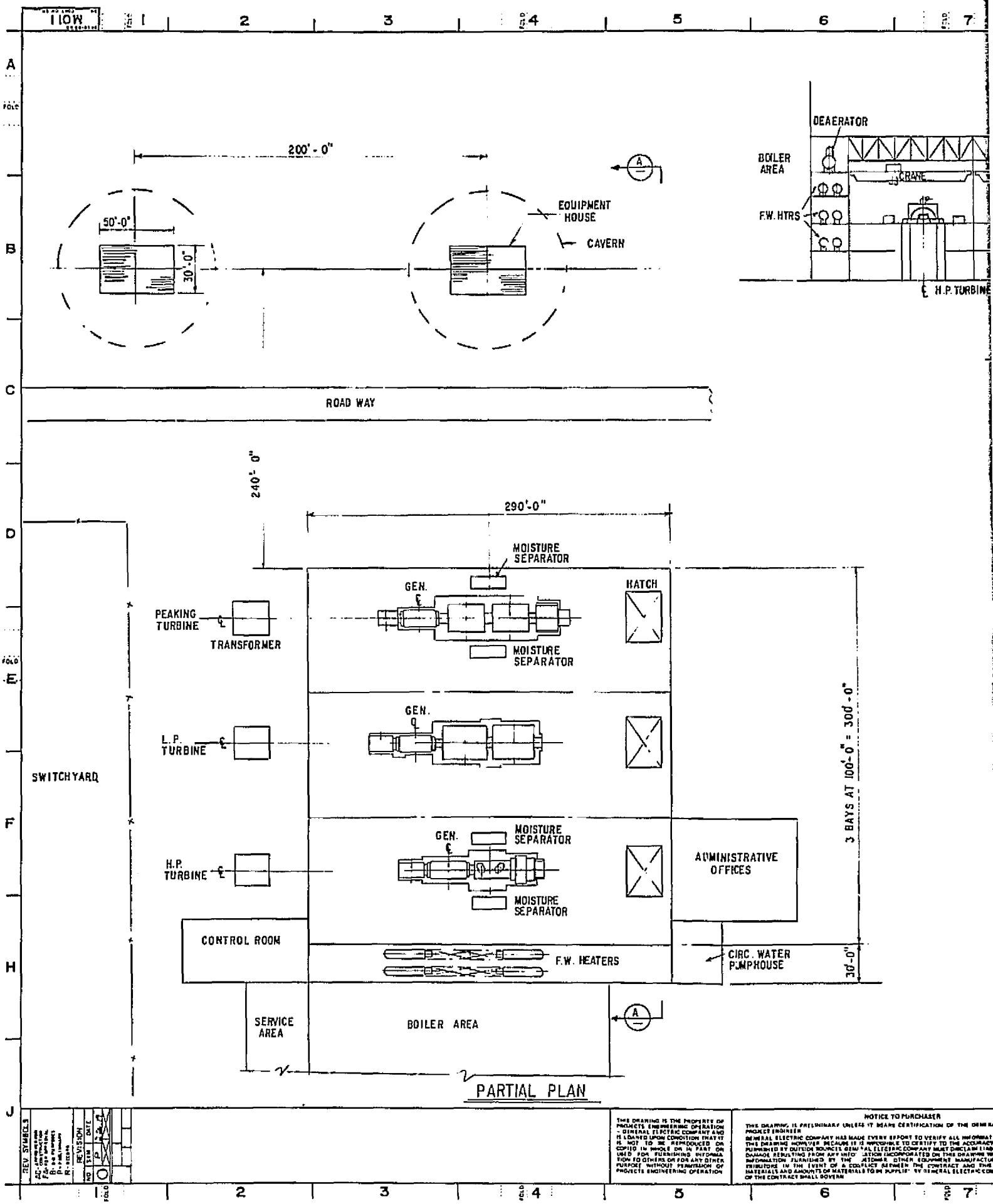

FOLDOUT FRAME

PRECEDING PAGE BLANK NOT FILMED

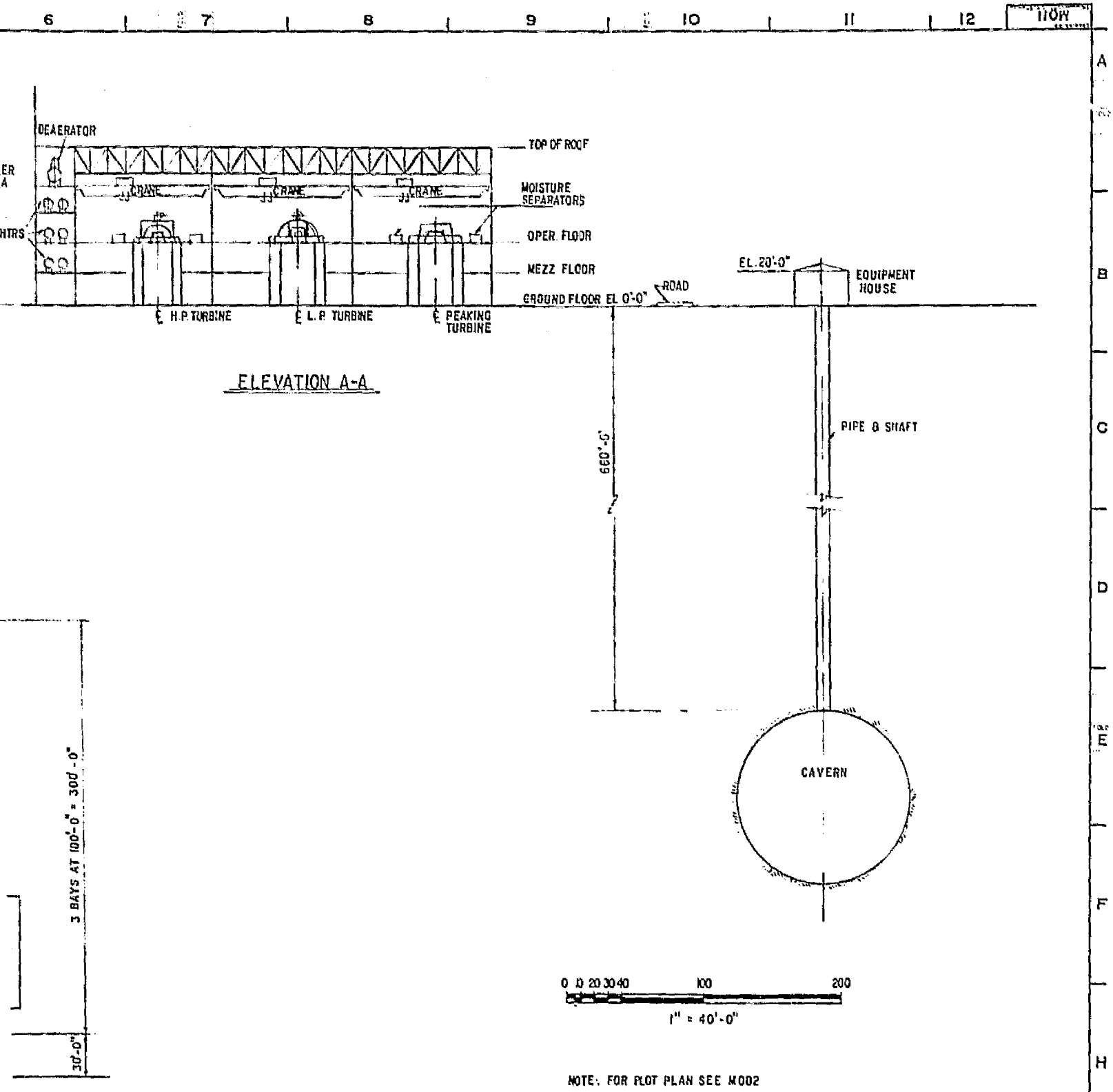

Figure 4-28. TES Plant #2, Equipment Arrangement

PRELIMINARY

ARRANGEMENT/PLANT NO 2
800 MW BASE FOSSIL PLANT
WITH CAVERNS

THERMAL ENERGY STORAGE

DOE / EPRI

GENERAL ELECTRIC
PROJECTS ENGINEERING OPERATION

M011

FOLDOUT FRAME 2

duration, the stored high pressure steam/water is throttled down to a constant steam pressure at 2.45 MPa (355 psia) for supply to the peaking steam turbine. The throttled steam flow rate to the peaking steam turbine inlet is 1.93 x 10^6 kg/hr (4.25 x 10^6 lb/hr) at a constant pressure of 2.45 MPa (355 psia). The underground caverns during discharging mode thus operate under variable pressure from 4.93 MPa (714.7 psia) to 2.45 MPa (355 psia).

Special provisions for piping and baffles inside the tanks must be provided to assure good mixing during the charging cycle, otherwise the storage capacity would be greatly reduced.

The excavated cavity is made in a competent hard rock, with a steel liner fabricated within the cavity and high temperature, high strength concrete poured between liner and rock for stress transfer. The 660 foot depth of cavity excavation is such that its overburden will sustain the pressure of storage.

The TES system component descriptions are given in Table 4-9.

Table 4-9

TES COMPONENT DESCRIPTIONS FOR PLANT #2 - HSC PLANT WITH UNDERGROUND PRESSURIZED WATER STORAGE

Component	Description
Underground Cavern Thermal Storage Tank	Five identical underground cavern thermal storage tanks; spherical tank with 28,000 m^3 (7,396,164 gal) per tank, diameter of 38 m (125 ft).
Auxiliary Condensate Pump	One centrifugal pump with 315.4 liters/sec (5,000 gal/min) capacity and 213.36 m (700 ft) TDH (water column). BHP: 1200 HP.
Control Valves	36": CV-1, CV-2, CV-3, CV-4, CV-5, CV-9, CV-10, CV-11, CV-12, CV-13, CV-14, CV-15, CV-16, CV-17, CV-18.
	30": CV-6, CV-7.
	24": CV-8.
Motor Operated Valves	30": V-1, V-2, V-3, V-4, V-5, V-6.
Piping	36" STD WT CARBON STEEL 6000 ft
	30" STD WT CARBON STEEL 3000 ft.

PRECEDING PAGE BLANK NOT FILMED

The detailed TES process flow diagrams, Figures 4-23 and 4-24, show the five underground caverns with associated steam piping and valves. The plant arrangement drawings as shown in Figures 4-19, 4-27, and 4-28 are based on drawings as documented in NUREG-0244, Volume 3, Reference 4-2. These figures indicate the modifications made such as underground caverns, peaking turbine generator, the cross compound base steam turbine generators and the switchyard, etc., to accommodate the thermal energy storage system. Figure 4-26 shows the electrical one line diagram of this plant with 3 generators.

Plant #3 - Nuclear LWR Plant with Aboveground Hot Feedwater Storage

An artist rendering of this Plant #3 is shown in Figure 4-30, the performance is given in Table 4-10 (page 4-68), and the approximate auxiliary losses breakdown in Table 4-11 (page 4-69). This plant has a limited ratio of peak to minimum power and has no separate peaking steam turbine. The percentage swing is -12.88% during charging operation and +11.96% during discharging operation. The TES turnaround efficiency is 0.72 based on gross power output and 0.69 based on net power output.

The plant conceptual design drawings are illustrated in Figures 4-31 through 4-33 for heat and mass balance diagrams for base cycle, charging cycle, and discharging cycle, respectively; Figure 4-34 and 4-35 for TES system flow diagrams for charging and discharging operation; Figure 4-36 for main steam flow diagram, Figure 4-37 for electrical one line diagram and Figures 4-38 and 4-39 for plot plan and equipment arrangement.

(Text continued on Page 4-89)

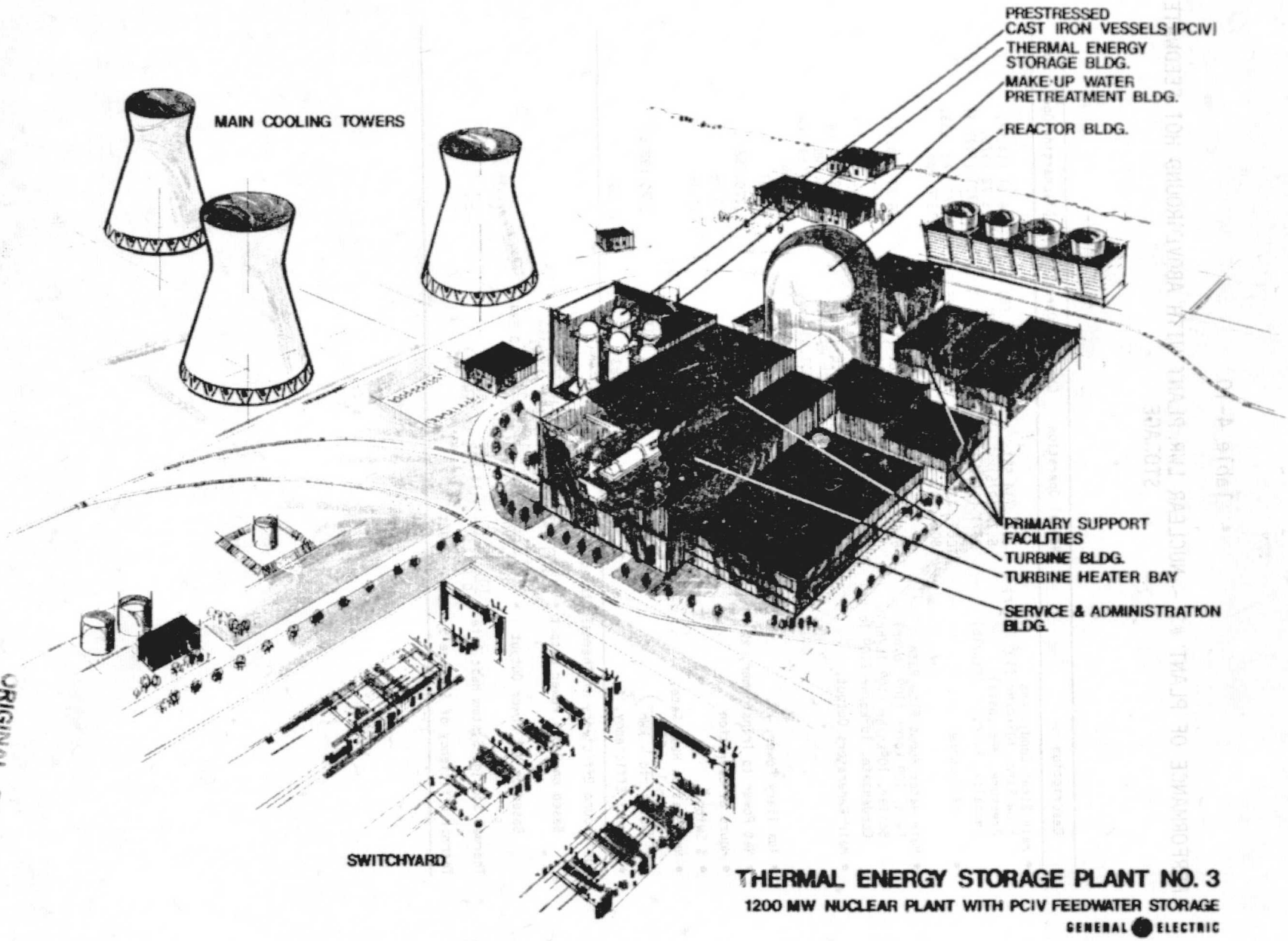

Figure 4-30. Artist Rendering of TES Plant #3

ORIGINAL PAGE IS
OF POOR QUALITY

Table 4-10

PERFORMANCE OF PLANT #3 - NUCLEAR LWR PLANT WITH ABOVEGROUND HOT FEEDWATER STORAGE

Description	Normal Operation	Charging Operation	Discharging Operation
• Main Steam Conditions			
Flow Rate, 10^6kg/hr (10^6 lb/hr)	6.61 (14.58)	6.61 (14.58)	6.61 (14.58)
Pressure, MPa (psia)	6.72 (975)	6.72 (975)	5.72 (975)
Enthalpy, kJ/kg (Btu/lb)	2771 (1191.3)	2771 (1191.3)	2771 (1191.3)
• Type of Turbine	TC6F, 43" LSB 1800 rpm	TC6F, 43" LSB, 1800 rpm	TC6F, 43" LSB, 1800 rpm
• Main Water Pumps Flow Rate			
Feed, 10^6 kg/hr (10^6 lb/hr)	6.61 (14.58)	6.61 (14.58)	6.61 (14.58)
Boiler, 10^6kg/hr (10^6 lb/hr)	---	3.91 (8.63)	---
Condensate, 10^6kg/hr (10^6 lb/hr)	4.57 (10.08)	3.92 (8.65)	5.23 (11.54)
• Main Generators Output,	1124,567 kW @ 3" HG 1,142,314 kW @ 2.2" HG	995,617 kW @ 2" HG 1,001,834 kW @1.7" HG	1,239,575 kW @ 4.5" HG 1,276, 695 kW @ 3" HG
• Auxiliary Power, kW	51,994	51,964	55,937
• Net Power to Transformer, kW	1,090,320	949,870	1,220,758
• Hours of Operation	10.02	8	5.98
• % Swing	---	-12.88	+11.96
• Net Station Heat Rate, $\frac{\text{J-Thermal}}{\text{J-Electric}}\left(\frac{\text{Btu}}{\text{kWh}}\right)$	3.03 (10318)	3.47 (11844)	2.70 (9216)
• Thermal Efficiency, %	33.10	28.83	37.06

Turnaround Efficiency of Thermal Storage System:

Based on Gross Power Output $= \frac{5.98\ (1,276,695 - 1,142,314)}{8\ (1,142,314 - 1,001,834} = 0.715$

Based on Net Power Output $= \frac{5.98\ (1,220,758 - 1,090,320)}{8\ (1,090,320 - 949,870)} = 0.694$

Thermal Storage System Heat Rate $= \frac{10,318.11}{0.694} = 14,865\ \frac{\text{Btu}}{\text{kWh}}$

Thermal Efficiency of Storage System - 22.98%

Table 4-11

APPROXIMATE AUXILIARY LOSSES BREAKDOWN OF PLANT #3 - LWR PLANT ABOVEGROUND FEEDWATER STORAGE

Description	Losses in Horsepower		
	Normal Operation	Charging Operation	Discharging Operation
Reactor Cooling Pumps	28,000	28,000	28,000
Circulating Water Pumps	20,000	20,000	20,000
Condensate Booster Pumps	7,500	6,440	8,580
Condensate Pumps	3,750	3,220	4,290
Heater Drain Pumps	2,500	2,500	2,500
Makeup Water Pumps	500	500	500
Service Water Pumps	1,500	1,500	1,500
Cooling Tower Fans	6,000	5,150	6,870
Recirculating Pumps	--	2,400	--
Makeup Pumps	--	--	2,800
Total Losses, HP (kW)	69,750 (51,994)	69,710 (51,964)	75,040 (55,937)

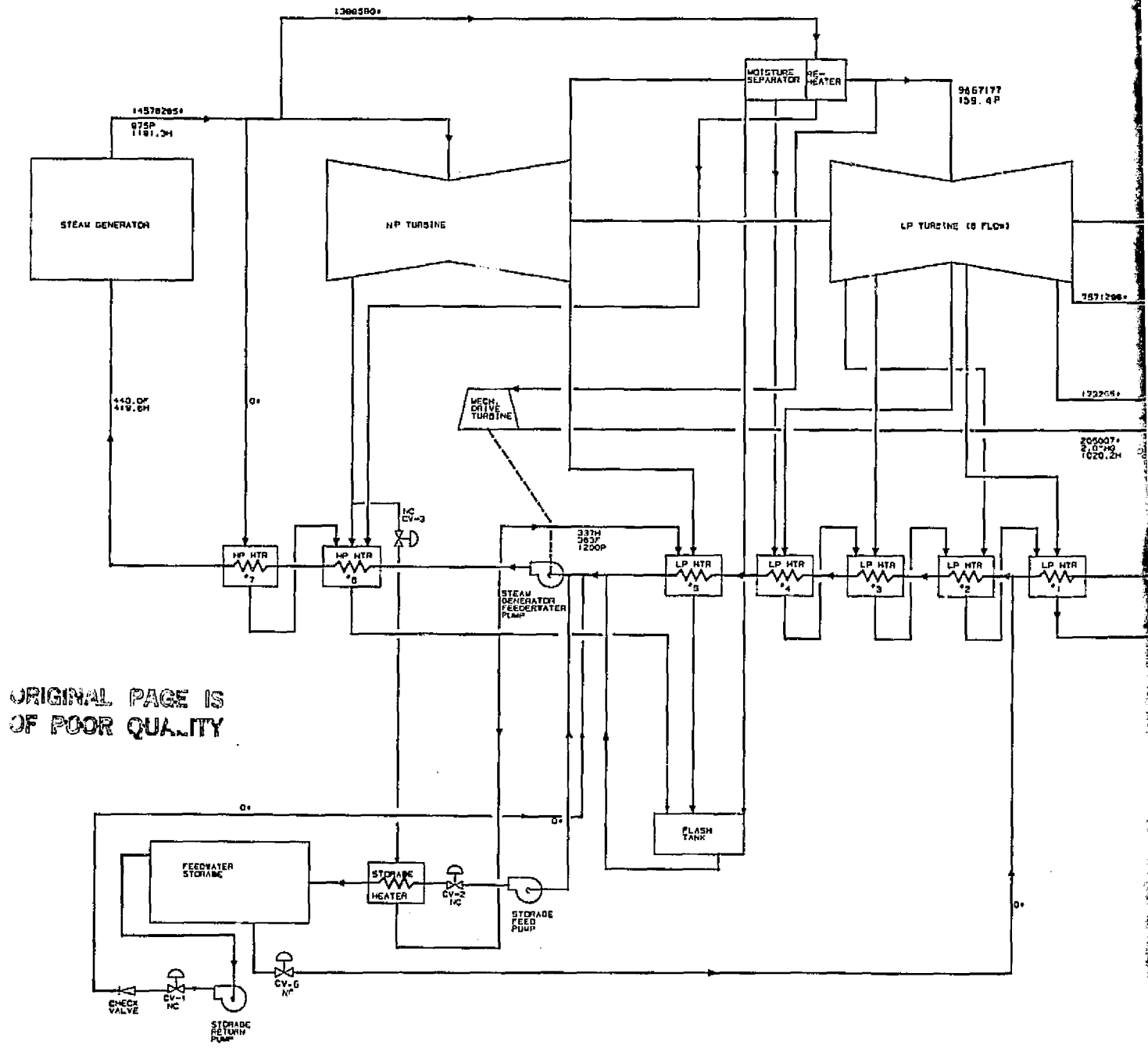

ORIGINAL PAGE IS
OF POOR QUALITY

FOLDOUT FRAME

PAGE BLANK NOT FILMED

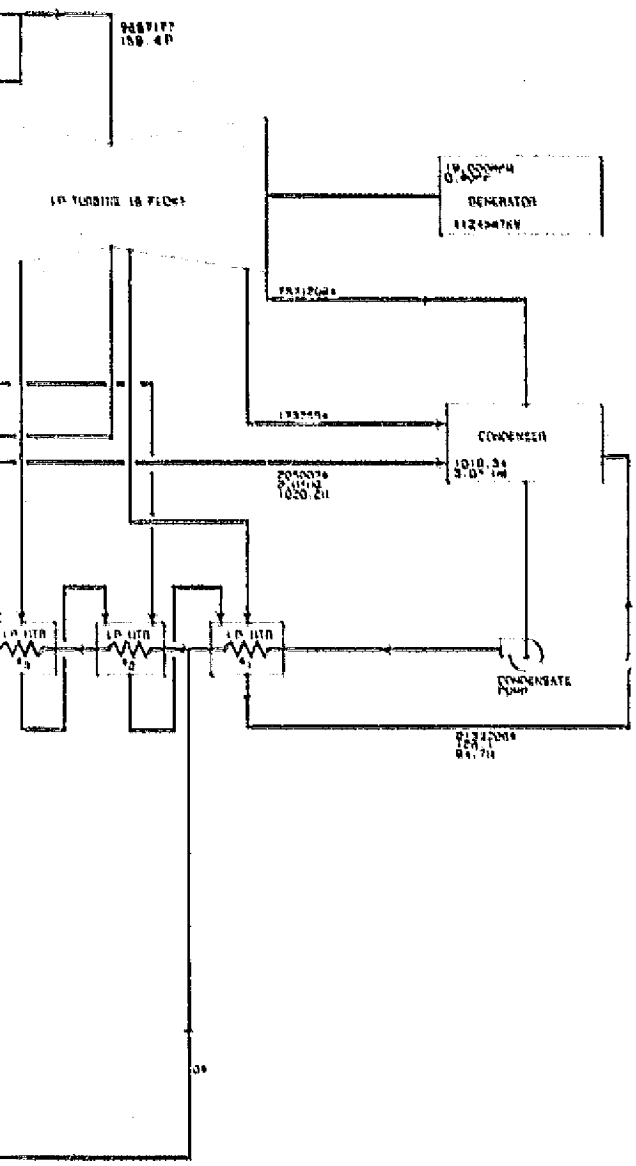

PERFORMANCE DATA

DESCRIPTION	NORMAL OPERATION
• MAIN STEAM CONDITIONS FROM REACTOR,	
FLOW, 10^6 LB/HR	[illegible]
PRESSURE, PSIA	[illegible]
ENTHALPY, BTU/LB	[illegible]
• TYPE OF TURBINE	[illegible]
• MAIN WATER PUMPS FLOW RATE,	
FEEDWATER, 10^6 LB/HR	[illegible]
CONDENSATE, 10^6 LB/HR	[illegible]
• MAIN GENERATOR OUTPUT	[illegible]
• AUXILIARY POWER, KW	[illegible]
• NET POWER TO TRANSFORMERS, KW	[illegible]
• HOURS OF OPERATION	[illegible]
• % UPTIME	
• NET STATION HEAT RATE, BTU/KW HR	[illegible]
• THERMAL EFFICIENCY, %	[illegible]

LEGEND

F=FLOW, LB/HR
P=PRESSURE, PSIA
H=ENTHALPY, BTU/LB
T=TEMPERATURE, DEG.F

Figure 4-31. TES Plant #3, Heat and Mass Balance Numbers for Base Cycle

BASE CYCLE

HEAT & MASS BALANCE DIAGRAM
1125 MW BASE PWR PLANT
ABOVE GROUND FEEDWATER SYSTEM
THERMAL ENERGY STORAGE

GENERAL ELECTRIC
PROJECTS ENGINEERING OPERATION

M230

2 FOLDOUT FRAME

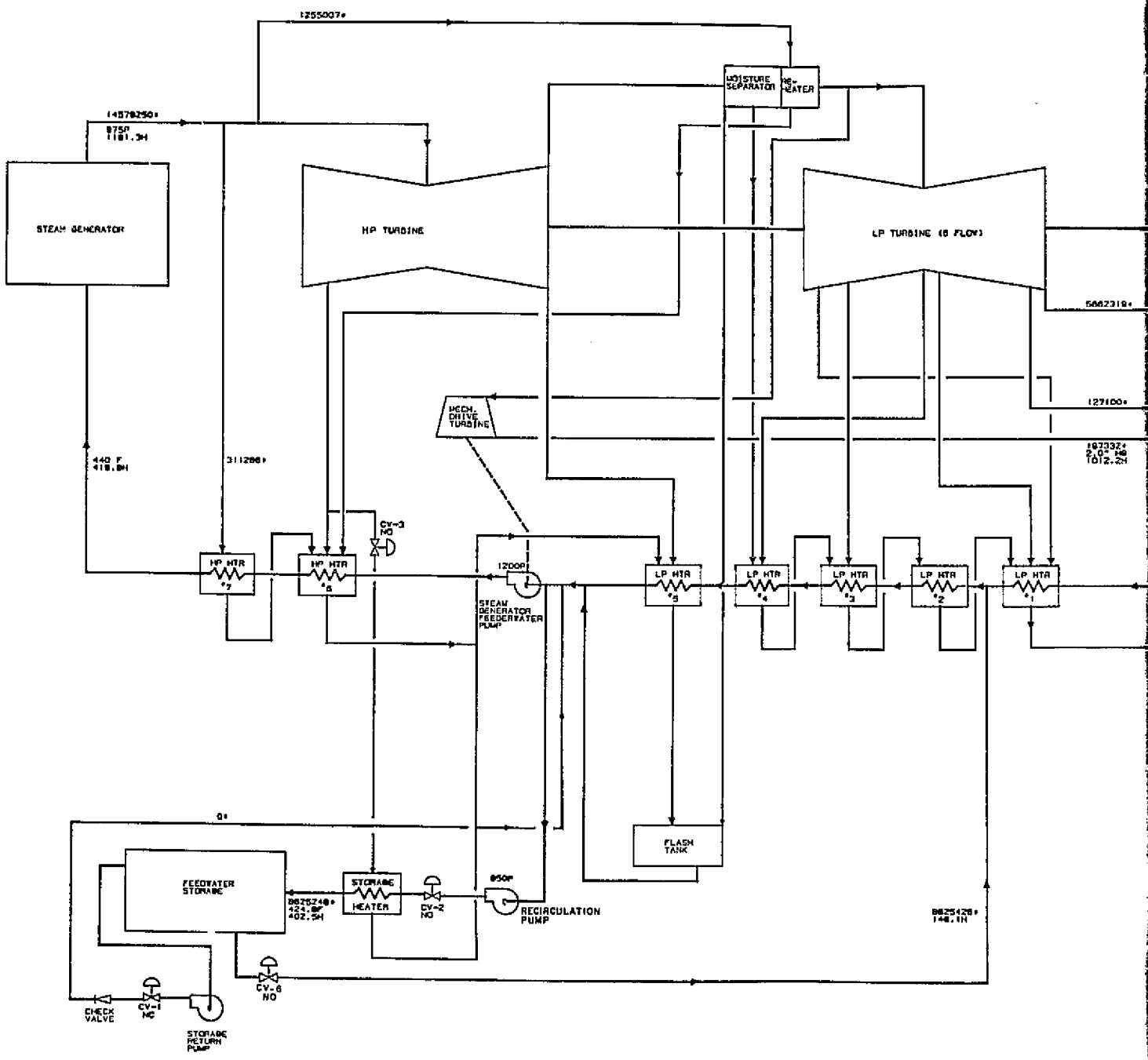

PRECEDING PAGE BLANK NOT FILMED

FOLDOUT FRAME 1

REV SYMBOLS

REVISION

THIS DRAWING IS THE PROPERTY OF PROJECTS ENGINEERING OPERATION - GENERAL ELECTRIC COMPANY AND IS LOANED UPON CONDITION THAT IT IS NOT TO BE REPRODUCED OR COPIED IN WHOLE OR IN PART OR USED FOR FURNISHING INFORMATION TO OTHERS OR FOR ANY OTHER PURPOSE WITHOUT PERMISSION OF PROJECTS ENGINEERING OPERATION

NOTICE TO PURCHASER

THIS DRAWING IS PRELIMINARY UNLESS IT BEARS CERTIFICATION OF THE GENERAL ELEC PROJECT ENGINEER

GENERAL ELECTRIC COMPANY HAS MADE EVERY EFFORT TO VERIFY ALL INFORMATION HER THIS DRAWING HOWEVER, BECAUSE IT IS IMPOSSIBLE TO CERTIFY TO THE ACCURACY OF ALL FURNISHED BY OUTSIDE SOURCES, GENERAL ELECTRIC COMPANY MUST DISCLAIM LIABILITY FO DAMAGE RESULTING FROM ANY INFORMATION INCORPORATED ON THIS DRAWING WHICH IS INFORMATION FURNISHED BY THE CUSTOMER, OTHER EQUIPMENT MANUFACTURERS OR TRIBUTORS. IN THE EVENT OF A CONFLICT BETWEEN THE CONTRACT AND THIS DRAWI MATERIALS AND AMOUNTS OF MATERIALS TO BE SUPPLIED BY GENERAL ELECTRIC COMPANY T OF THE CONTRACT SHALL GOVERN

ORIGINAL PAGE IS
OF POOR QUALITY

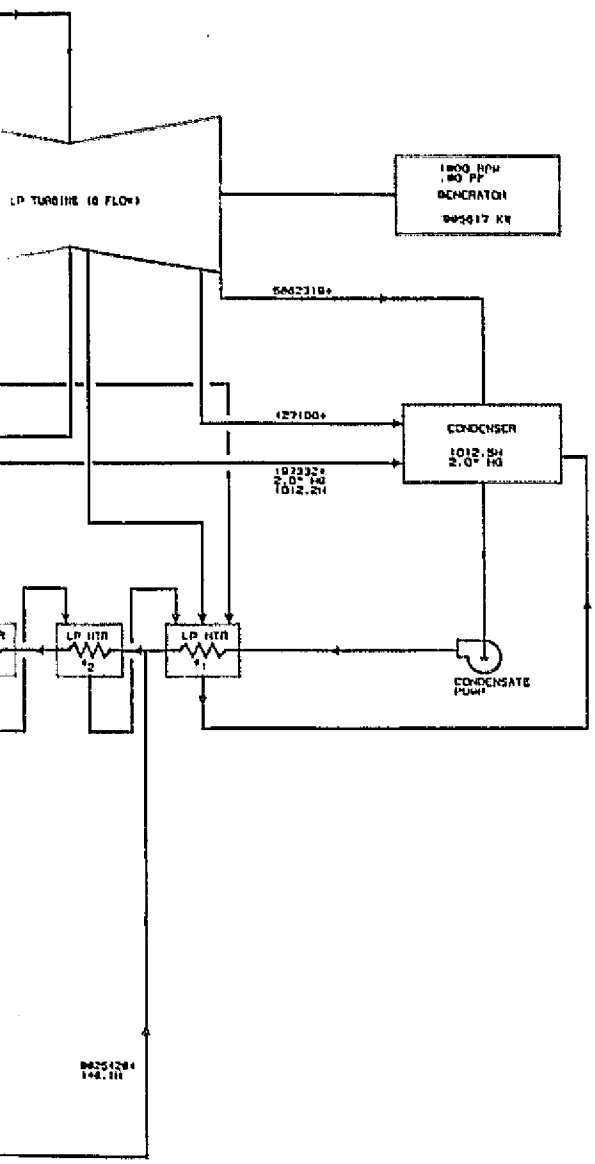

PERFORMANCE DATA

DESCRIPTION	CHARGING OPERATION
• MAIN STEAM CONDITIONS FROM REACTOR,	
FLOW, 10^6 LB/HR	14.58
PRESSURE, PSIA	875
ENTHALPY, BTU/LB	1181.3
• TYPE OF TURBINE	TC6F, 43"LSB 1800RPM
• MAIN WATER PUMPS FLOW RATE, FEEDWATER, 10^6 LB/HR	14.58
CONDENSATE, 10^6 LB/HR	0.05
• MAIN GENERATOR OUTPUT	905,617KW @ 2"HG
• AUXILARY POWER, KW	51,964
• NET POWER TO TRANSFORMERS, KW	943,653
• HOURS OF OPERATION	8
• % SWING	-12.0
• NET STATION HEAT RATE, BTU/KW-HR	11908
• THERMAL EFFICIENCY, %	29

LEGEND

F=FLOW-LB/HR
P=PRESSURE-PSIA
H=ENTHALPY-BTU/LB
F=TEMPERATURE-DEG.F

Figure 4-32. TES Plant #3, Heat and Mass Balance Numbers for Charging Cycle

CHARGING CYCLE

NOTICE TO PURCHASER

HEAT & MASS BALANCE DIAGRAM
1125 MW BASE PWR PLANT
ABOVE GROUND THERMAL ENERGY STORAGE

THERMAL ENERGY STORAGE

DOE/EPRI

GENERAL ELECTRIC
PROJECTS ENGINEERING OPERATION

3N7113T

W231

FOUT FRAME 2

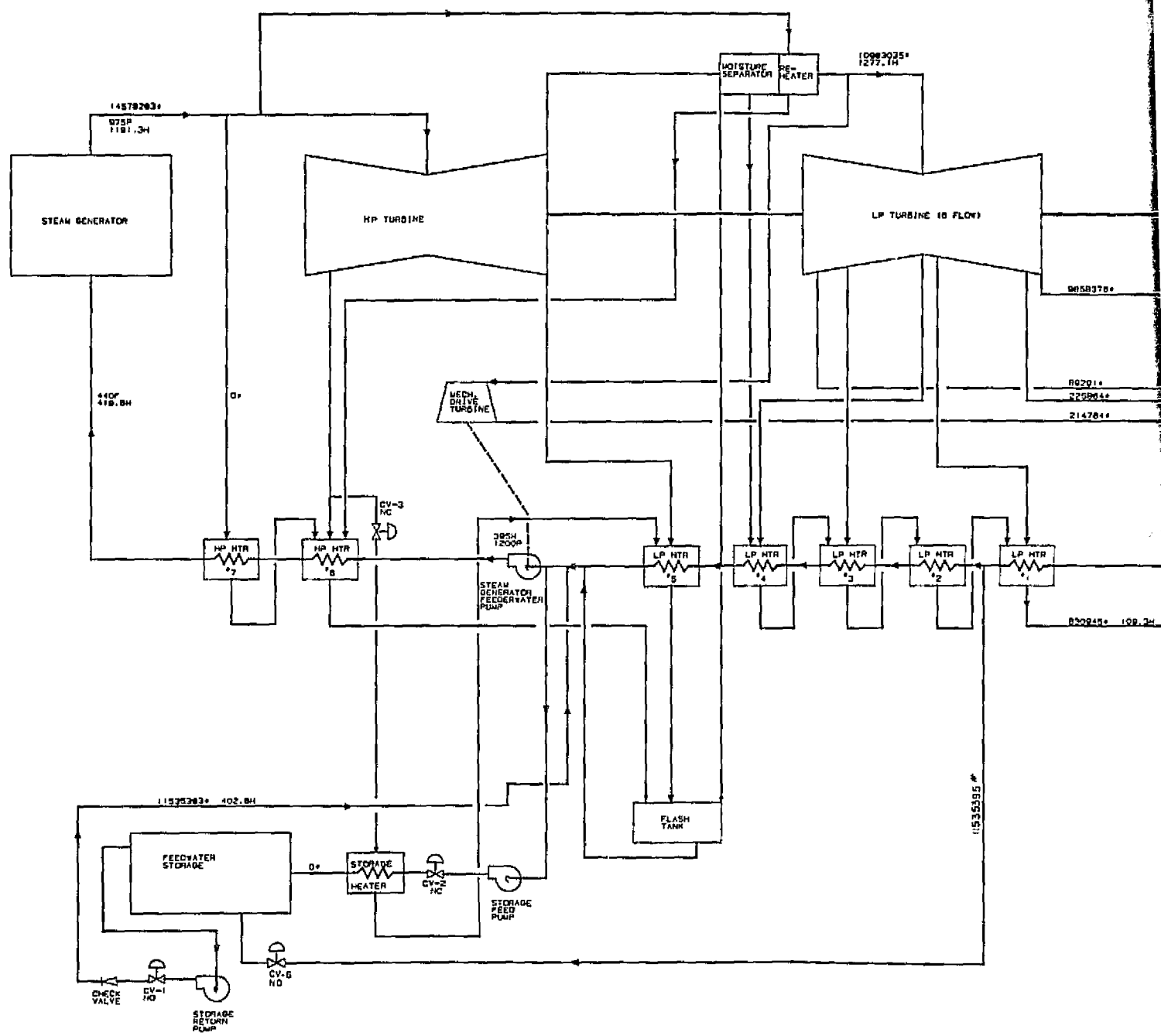

PRECEDING PAGE BLANK NOT FILMED

FOLDOUT FRAME 1

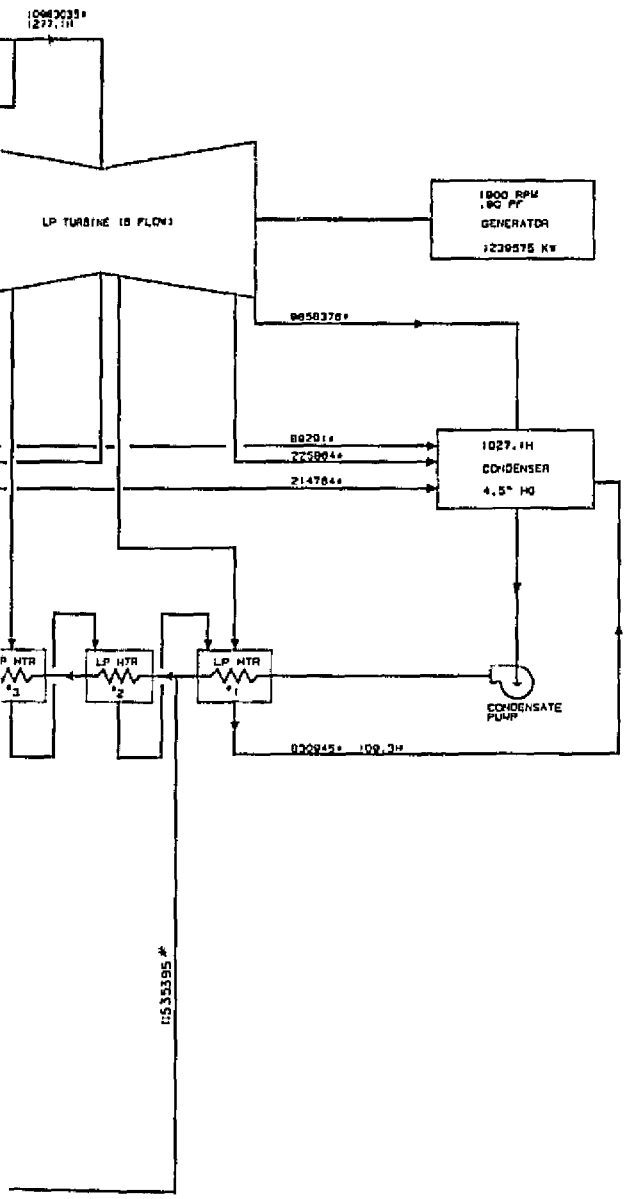

PERFORMANCE DATA

DESCRIPTION	DISCHARGING OPERATION
• MAIN STEAM CONDITIONS FROM REACTOR,	
FLOW, 10^6LB/HR	14.58
PRESSURE, PSIA	875
ENTHALPY, BTU/LB	1181.3
• TYPE OF TURBINE	TC6F, 43"LSB 1800RPM
• MAIN WATER PUMPS FLOW RATE,	
FEED, 10^6LB/HR	14.58
CONDENSATE, 10^6LB/HR	11.54
• MAIN GENERATOR OUTPUT	1,238,875KW @ 4.5"HG
• AUXILARY POWER, KW	55,937
• NET POWER TO TRANSFORMERS, KW	1,174,538
• HOURS OF OPERATION	5.98
• % SWING	+10
• NET STATION HEAT RATE, BTU/KW-HR	9,504
• THERMAL EFFICIENCY, %	36

LEGEND

•=FLOW-LB/HR
P=PRESSURE-PSIA
H=ENTHALPY-BTU/LB
F=TEMPERATURE-DEG.F

Figure 4-33. TES Plant #3, Heat and Mass Balance Numbers for Discharging Cycle

DISCHARGING CYCLE

NOTICE TO PURCHASER

HEAT & MASS BALANCE DIAGRAM
1125 MW BASE PWR PLANT
ABOVE GROUND THERMAL ENERGY STORAGE

THERMAL ENERGY STORAGE

DOE/EPRI

GENERAL ELECTRIC
PROJECTS ENGINEERING OPERATION

S30N7113

M232

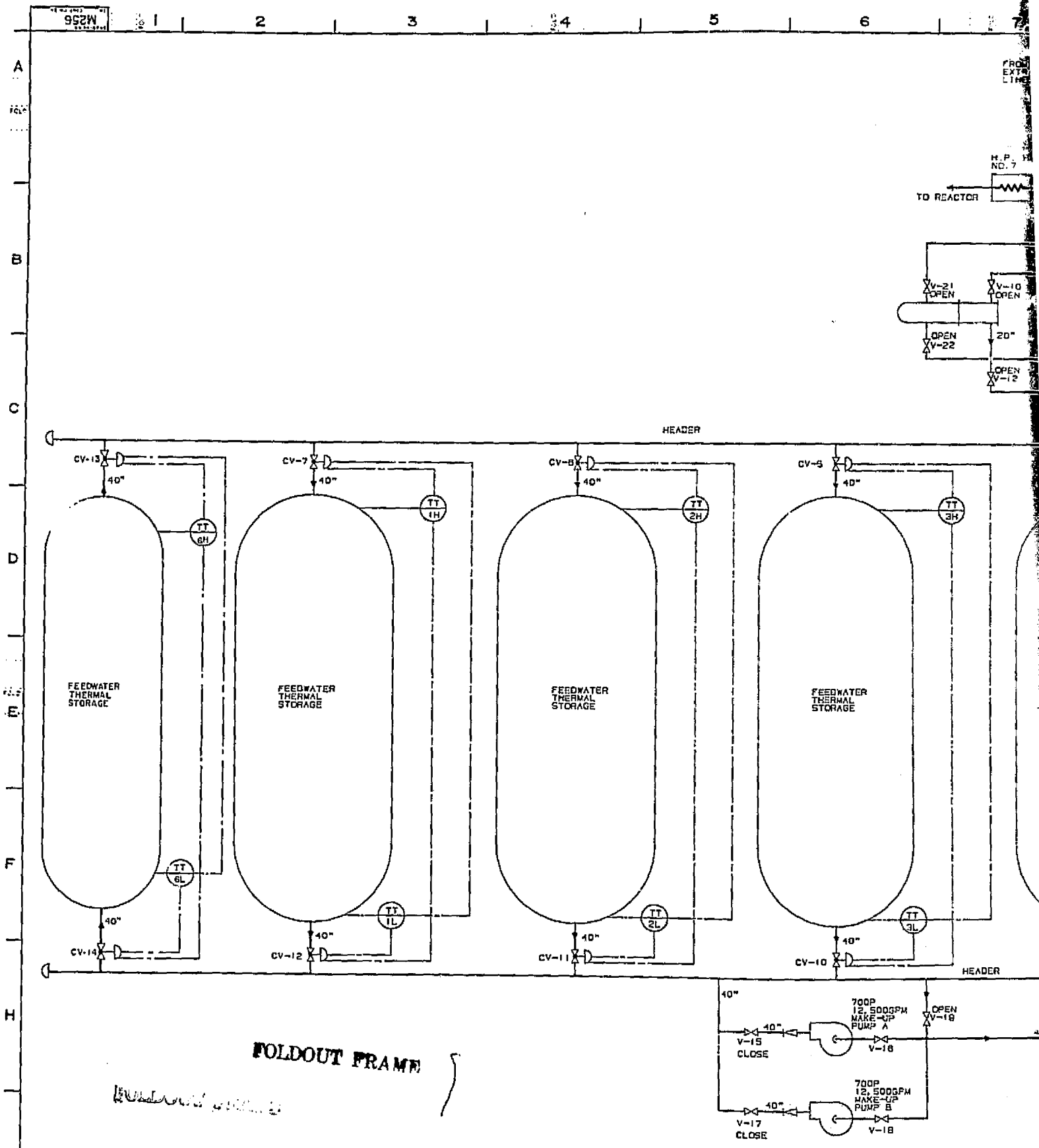

PRECEDING PAGE BLANK NOT FILMED

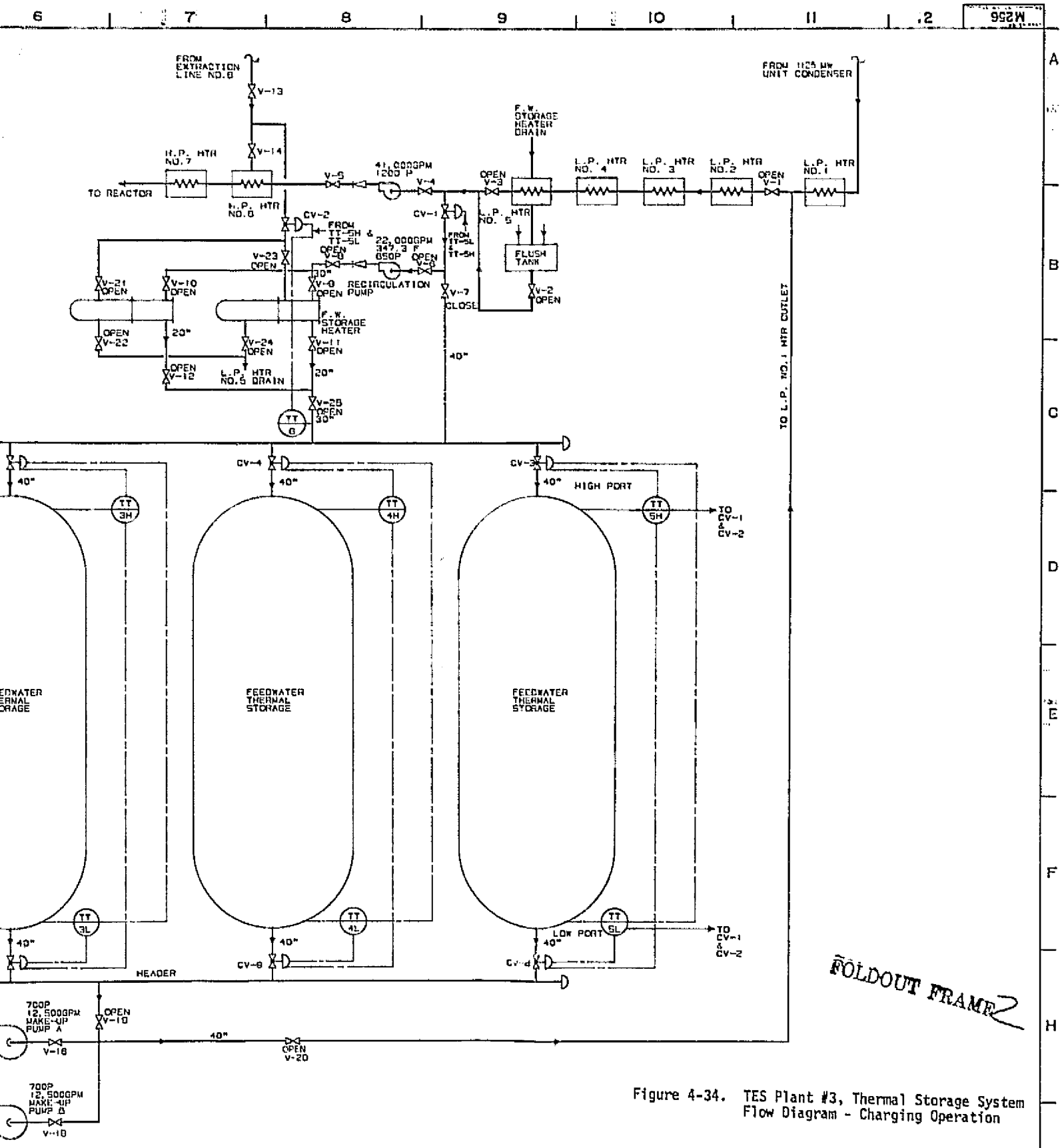

Figure 4-34. TES Plant #3, Thermal Storage System Flow Diagram - Charging Operation

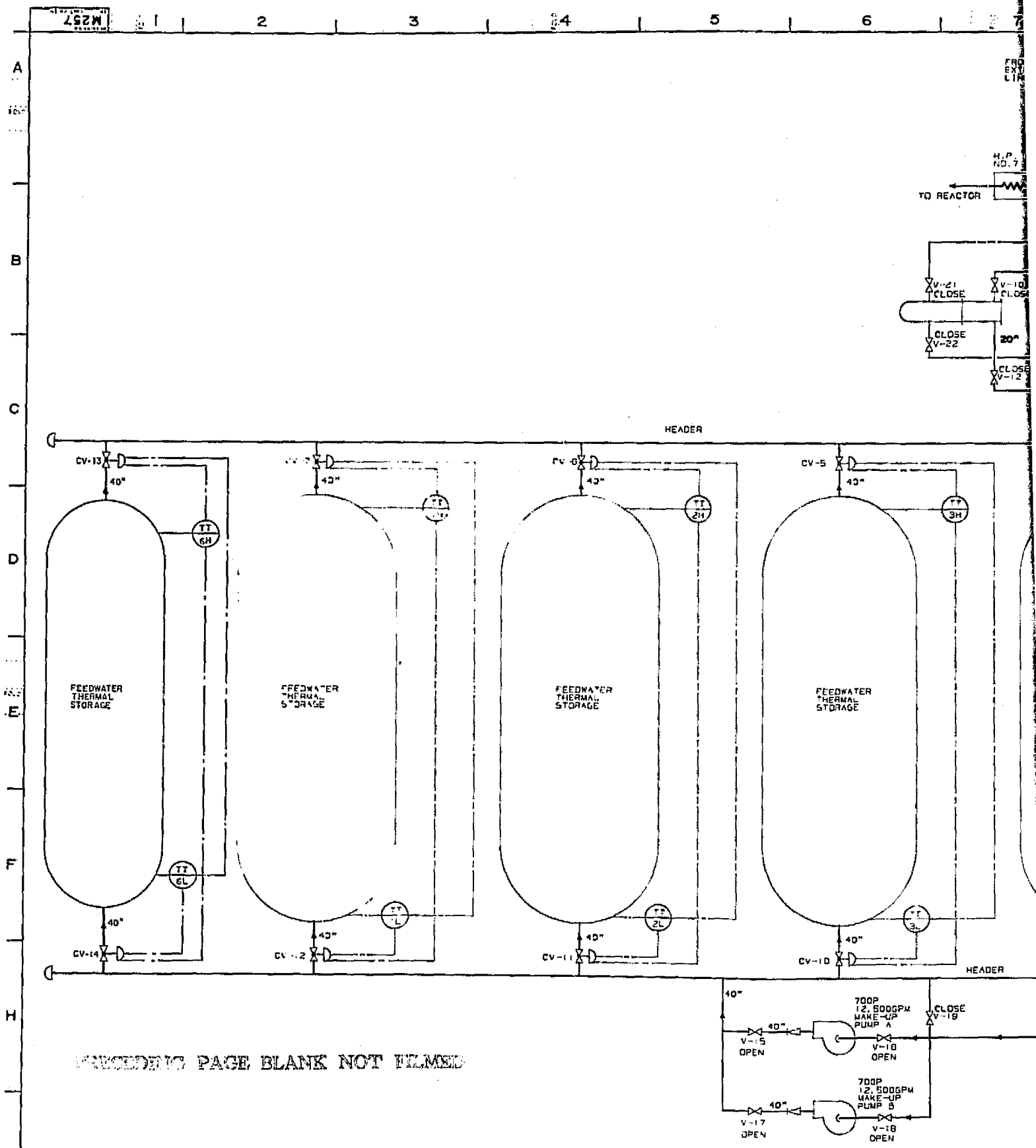
M257
TO REACTOR
H.P. NO. 7
V-21 CLOSE
V-10 CLOSE
CLOSE V-22
20"
CLOSE V-12
HEADER
CV-13
CV-5
40"
TT 6H
TT 2H
TT 3H
FEEDWATER THERMAL STORAGE
TT 6L
TT 2L
CV-14
CV-11
CV-10
HEADER
700P 12,500GPM MAKE-UP PUMP A
CLOSE V-19
V-15 OPEN
V-16 OPEN
700P 12,500GPM MAKE-UP PUMP B
V-17 OPEN
V-18 OPEN
PRECEDING PAGE BLANK NOT FILMED
REV SYMBOLS
REVISION
THIS DRAWING IS THE PROPERTY OF PROJECTS ENGINEERING OPERATION GENERAL ELECTRIC COMPANY AND IS LOANED UPON CONDITION THAT IT IS NOT TO BE REPRODUCED OR COPIED IN WHOLE OR IN PART OR USED FOR FURNISHING INFORMATION TO OTHERS OR FOR ANY OTHER PURPOSE WITHOUT PERMISSION OF PROJECTS ENGINEERING OPERATION
NOTICE TO PURCHASER
FOLDOUT FRAME

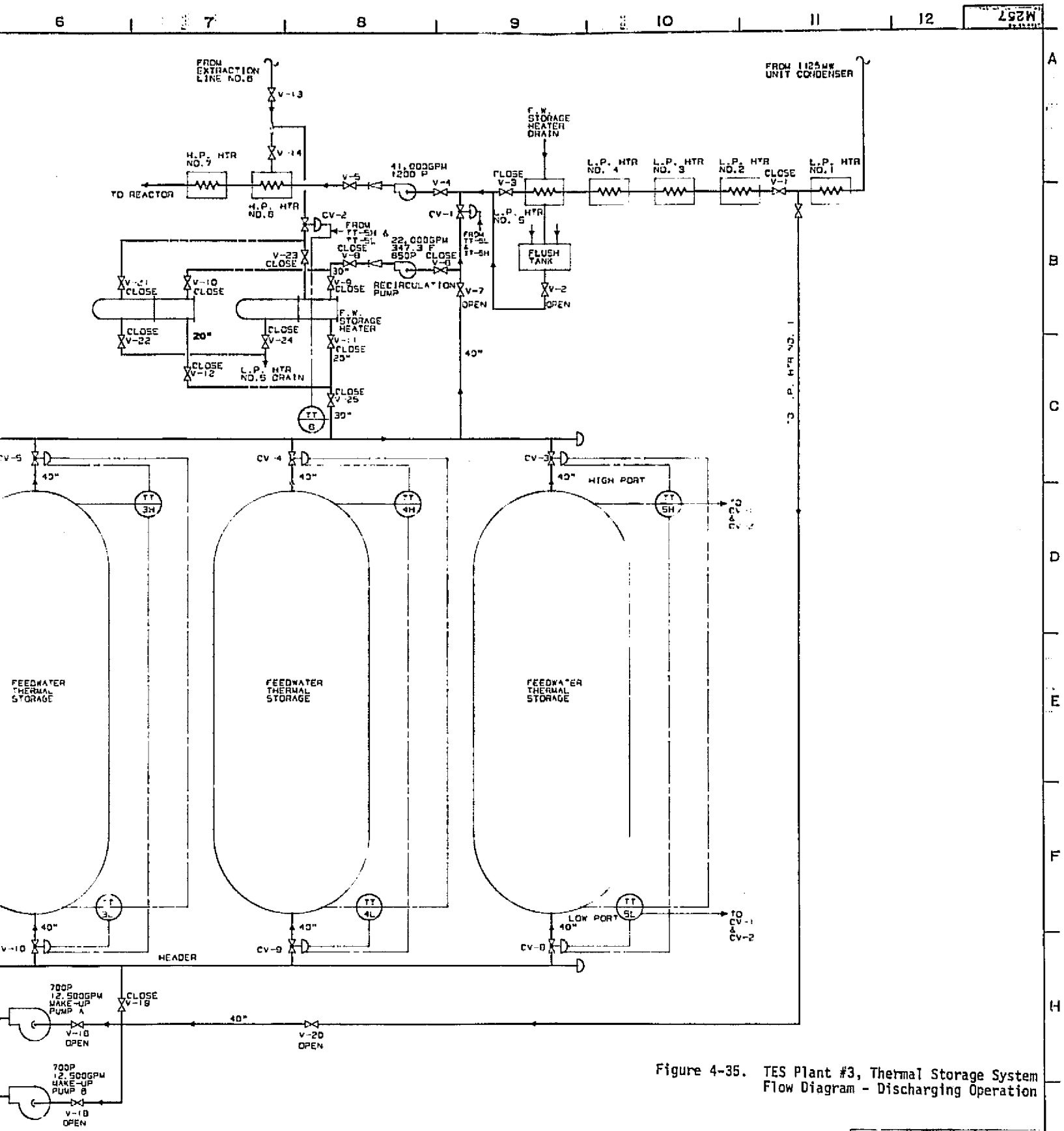

Figure 4-35. TES Plant #3, Thermal Storage System Flow Diagram - Discharging Operation

DISCHARGING OPERATION

PRELIMINARY

NOTICE TO PURCHASER

DRAWING IS PRELIMINARY UNLESS IT BEARS CERTIFICATION OF THE GENERAL ELECTRIC COMPANY PROJECT ENGINEER

GENERAL ELECTRIC COMPANY HAS MADE EVERY EFFORT TO VERIFY ALL INFORMATION INCORPORATED ON THIS DRAWING. HOWEVER, BECAUSE IT IS IMPOSSIBLE TO CERTIFY TO THE ACCURACY OF ALL INFORMATION OBTAINED BY OUTSIDE SOURCES, GENERAL ELECTRIC COMPANY MAKES NO DISCLAIMER OF LIABILITY FOR ALL LOSS OR DAMAGE RESULTING FROM ANY INFORMATION INCORPORATED ON THIS DRAWING WHICH IS SUPPLIED FROM INFORMATION FURNISHED BY THE CUSTOMER, OTHER EQUIPMENT MANUFACTURERS OR OTHER CONTRACTORS. IN THE EVENT OF A CONFLICT BETWEEN THE CONTRACT AND THIS DRAWING REGARDING THE TYPE AND AMOUNTS OF MATERIALS TO BE SUPPLIED BY GENERAL ELECTRIC COMPANY, THE PROVISIONS OF THE CONTRACT SHALL GOVERN

DRAWN BY: ALN/CAD
CHECKED BY:
ENGR APPROVAL: NONE
SCALE: NONE
MFG. NO.: 530N7113

TITLE: STORAGE SYSTEM FLOW DIAGRAM
1125MW BASE POWER PLANT
WITH ABOVE GROUND
FEED WATER STORAGE

PROJECT: DUAL MEDIA THERMAL ENERGY STORAGE

MADE FOR: DOE/EPRI

GENERAL ELECTRIC
PROJECTS ENGINEERING OPERATION

M257

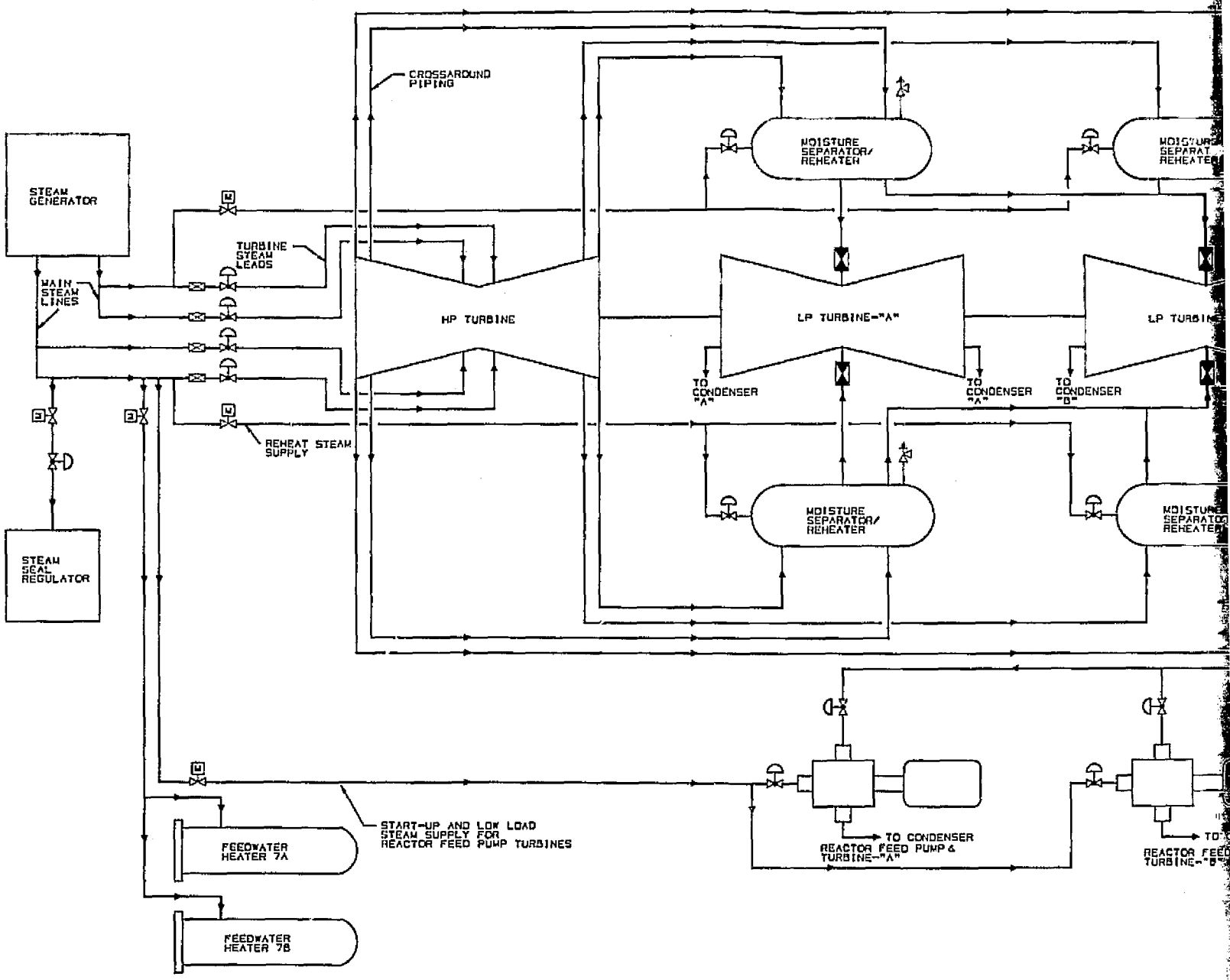

TYPICAL PIPE SIZES & MATERIALS	
LINE	NO.-SIZE
MAIN STEAM LINES	(1)-24"-SCH.80
STEAM SEAL REGULATOR FEED	(1)-4"-SCH.80
FEEDWATER HEATER 7A & 7B LINES	(1)-8"-SCH.80 TO (2)-6"-SCH.80
REACTOR FEED PUMP TURBINE LOW LOAD-SUPPLY	(1)-8"-SCH.80 TO (2)-6"-SCH.80
REHEAT STEAM SUPPLY	(1)-10"-SCH.80 TO (2)-8"-SCH.8
TURBINE STEAM LEADS	(4)-24"-SCH.80
CROSS AROUND PIPING TO MOISTURE SEPARATOR/REHEATER (MS/R)	(8)-40"-ID-0.625" WALL
MS/R TO COMBINED INTERMEDIATE VALVES	(8)-48"-ID-0.750" WALL
REACTOR FEED PUMP TURBINE NORMAL SUPPLY	(1)-14" SCH.40 TO (2)-10"-SCH.

PRECEDING PAGE BLANK NOT FILMED

THIS DRAWING IS THE PROPERTY OF PROJECTS ENGINEERING OPERATION GENERAL ELECTRIC COMPANY AND IS LOANED UPON CONDITION THAT IT IS NOT TO BE REPRODUCED OR COPIED IN WHOLE OR IN PART OR USED FOR FURNISHING INFORMATION TO OTHERS OR FOR ANY OTHER PURPOSE WITHOUT PERMISSION OF PROJECTS ENGINEERING OPERATION

NOTICE TO PURCHASER

THIS DRAWING IS PRELIMINARY UNLESS IT BEARS CERTIFICATION OF THE GENERAL ELECTRIC COMPANY PROJECT ENGINEER

GENERAL ELECTRIC COMPANY HAS MADE EVERY EFFORT TO VERIFY ALL INFORMATION INCORPORATED ON THIS DRAWING HOWEVER BECAUSE IT IS IMPOSSIBLE TO CERTIFY TO THE ACCURACY OF ALL INFORMATION FURNISHED BY OUTSIDE SOURCES GENERAL ELECTRIC COMPANY MUST DISCLAIM LIABILITY FOR ALL LOSS OR DAMAGE RESULTING FROM ANY INFORMATION INCORPORATED ON THIS DRAWING WHICH IS SUPPLIED FROM INFORMATION FURNISHED BY THE CUSTOMER OTHER EQUIPMENT MANUFACTURERS OR OTHER CONTRIBUTORS IN THE EVENT OF A CONFLICT BETWEEN THE CONTRACT AND THIS DRAWING RESPECTING MATERIALS AND AMOUNTS OF MATERIALS TO BE SUPPLIED BY GENERAL ELECTRIC COMPANY THE PROVISIONS OF THE CONTRACT SHALL GOVERN

FOLDOUT FRAME

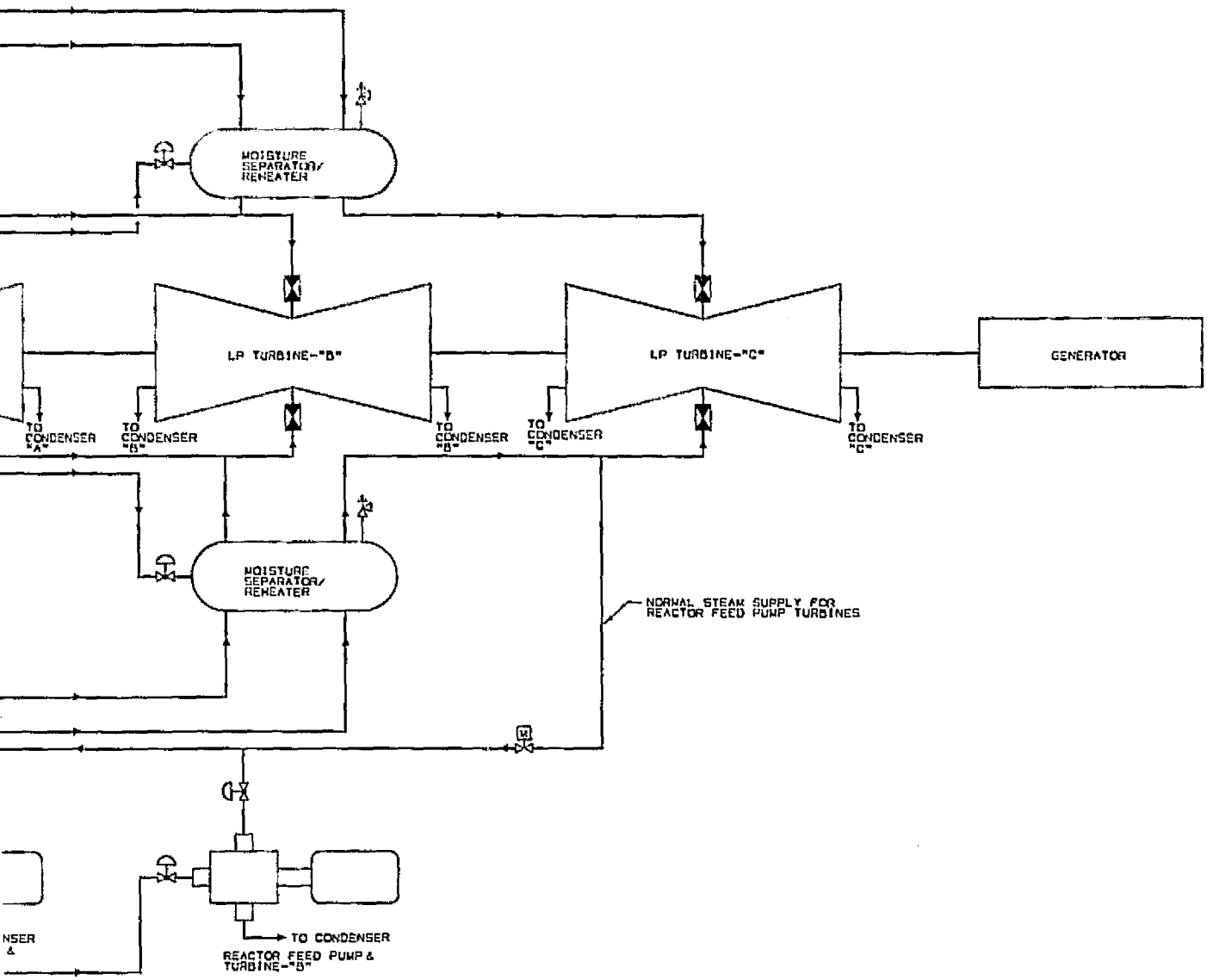

PIPE SIZES & MATERIALS		
	NO.-SIZE	MATERIAL
	(1)-24"-SCH.60	INCONEL/CARBON STEEL
	(1)-4"-SCH.80	CARBON STEEL
	(1)-8"-SCH.80 TO (2)-6"-SCH.80	CARBON STEEL
	(1)-8"-SCH.80 TO (2)-6"-SCH.80	CARBON STEEL
	(1)-10"-SCH.80 TO (2)-8"-SCH.80	CARBON STEEL
	(4)-24"-SCH.80	CARBON STEEL
4S/R)	(8)-40"-ID-0.625" WALL	NI-CR-CU ALLOY
	(8)-48"-ID-0.750" WALL	NI-CR-CU ALLOY
	(1)-14" SCH.40 TO (2)-10"-SCH.40	CARBON STEEL

LEGEND

- MOTOR OPERATED VALVE
- CONTROL VALVE
- TURBINE MAIN STOP VALVE
- COMBINED INTERMEDIATE VALVE
- RELIEF VALVE

Figure 4-36. TES Plant #3, Main Steam Flow Diagram

NOTICE TO PURCHASER

MAIN STEAM FLOW DIAGRAM
1125 MW BASE POWER PLANT
ABOVE GROUND FEEDWATER STORAGE
THERMAL ENERGY STORAGE
DOE/EPRI

GENERAL ELECTRIC
PROJECTS ENGINEERING OPERATION

M272

FOLDOUT FRAME 2

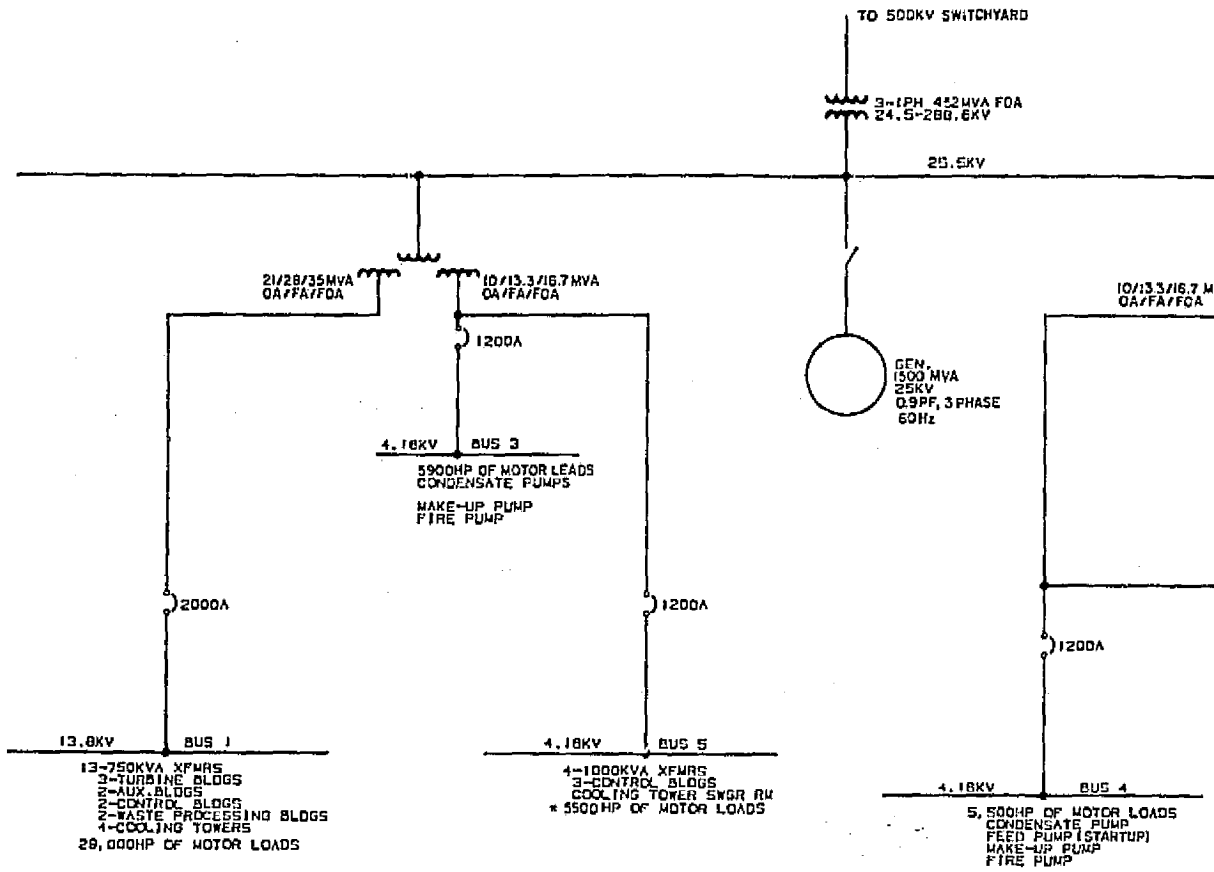

THIS DRAWING IS THE PROPERTY OF PROJECTS ENGINEERING OPERATION GENERAL ELECTRIC COMPANY AND IS LOANED UPON CONDITION THAT IT IS NOT TO BE REPRODUCED OR COPIED IN WHOLE OR IN PART OR USED FOR FURNISHING INFORMATION TO OTHERS OR FOR ANY OTHER PURPOSE WITHOUT PERMISSION OF PROJECTS ENGINEERING OPERATION

NOTICE TO PURCHASER

THIS DRAWING IS PRELIMINARY UNLESS IT BEARS CERTIFICATION OF THE GENERAL ELECTRIC COMPANY PROJECT ENGINEER.

GENERAL ELECTRIC COMPANY HAS MADE EVERY EFFORT TO VERIFY ALL INFORMATION INCORPORATED THIS DRAWING HOWEVER BECAUSE IT IS IMPOSSIBLE TO CERTIFY TO THE ACCURACY OF ALL INFORMA FURNISHED BY OUTSIDE SOURCES GENERAL ELECTRIC COMPANY MUST DISCLAIM LIABILITY FOR ALL CO DAMAGE RESULTING FROM ANY INFORMATION INCORPORATED ON THIS DRAWING WHICH IS SUPPLIED BY INFORMATION FURNISHED BY THE CUSTOMER OTHER EQUIPMENT MANUFACTURERS OR OTHER VENDORS IN THE EVENT OF A CONFLICT BETWEEN THE CONTRACT AND THIS DRAWING HERE MATERIALS AND AMOUNTS OF MATERIALS TO BE SUPPLIED BY GENERAL ELECTRIC COMPANY THE PROVI OF THE CONTRACT SHALL GOVERN

PRECEDING PAGE BLANK NOT FILMED

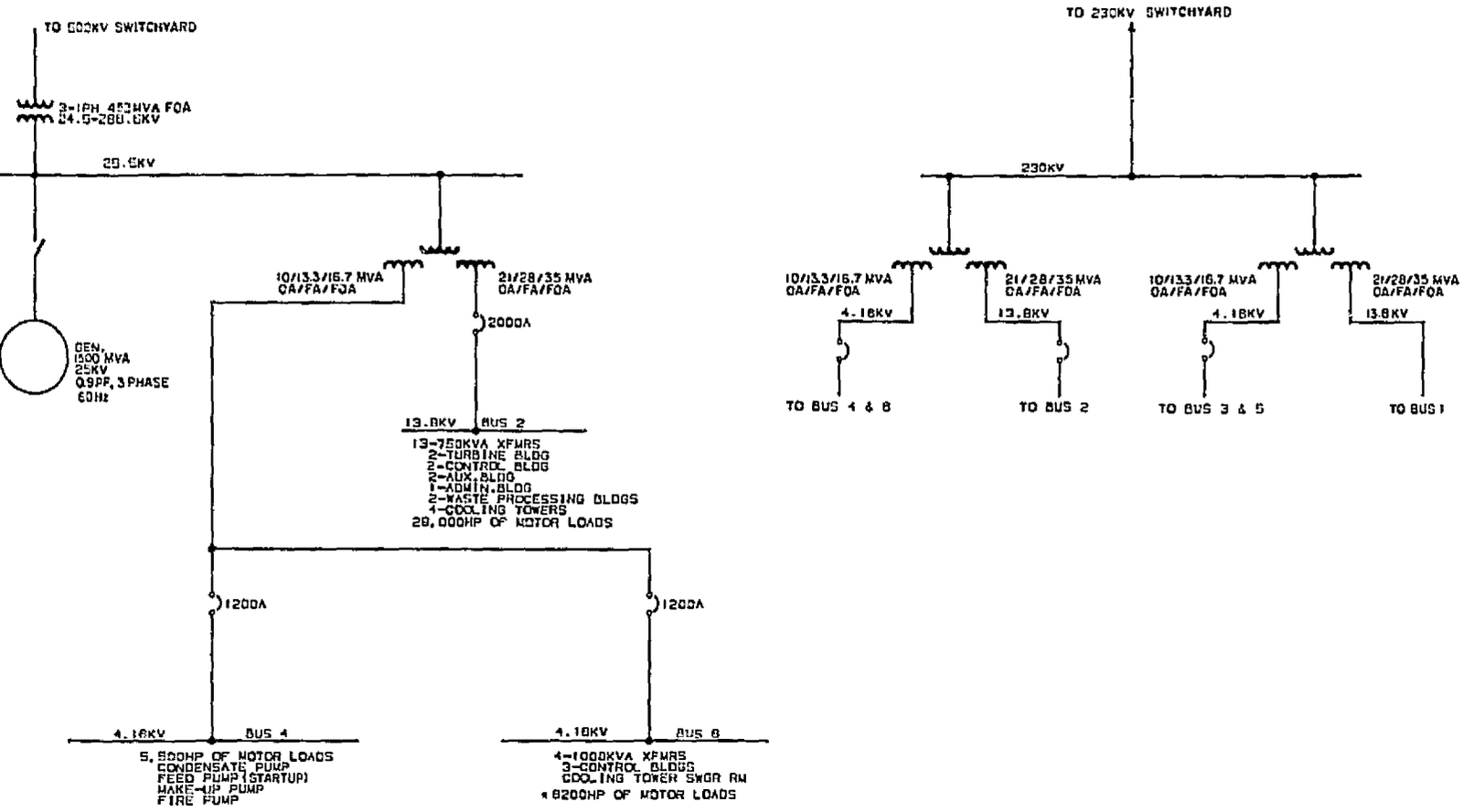

FOLDOUT FRAME 2

* INCLUDES 1000HP FOR TES AUXILIARIES

Figure 4-37. TES Plant #3, One Line Electrical Diagram

NOTICE TO PURCHASER

A DRAWING IS PRELIMINARY UNLESS IT BEARS CERTIFICATION OF THE GENERAL ELECTRIC COMPANY SHOP ENGINEER

GENERAL ELECTRIC COMPANY HAS MADE EVERY EFFORT TO VERIFY ALL INFORMATION INCORPORATED ON A DRAWING HOWEVER BECAUSE IT IS IMPOSSIBLE TO CERTIFY TO THE ACCURACY OF ALL INFORMATION FURNISHED BY OUTSIDE SOURCES GENERAL ELECTRIC COMPANY MUST DISCLAIM LIABILITY FOR ALL LOSS OR DAMAGE RESULTING FROM ANY INFORMATION INCORPORATED ON THIS DRAWING WHICH IS SUPPLIED FROM OR INFORMATION FURNISHED BY THE CUSTOMER, OTHER EQUIPMENT MANUFACTURERS OR OTHER CONTRACTORS. IN THE EVENT OF A CONFLICT BETWEEN THE CONTRACT AND THIS DRAWING RESPECTING THE ITEMS AND AMOUNTS OF MATERIALS TO BE SUPPLIED BY GENERAL ELECTRIC COMPANY THE PROVISIONS OF THE CONTRACT SHALL GOVERN

DRAWN BY GJB/CAD	CHECKED BY	FROM APPROVING	SCALE NONE
DWG NO			
FOR AS NO 530N7113			
PROJECT NO			

TITLE ELECTRICAL ONE-LINE DIAGRAM
1125 MW BASE PWR PLANT
ABOVE GROUND FEEDWATER STORAGE

PROJECT THERMAL ENERGY STORAGE

MADE FOR DOE EPRI

GENERAL ELECTRIC
PROJECTS ENGINEERING OPERATION

DRAWING NO E154

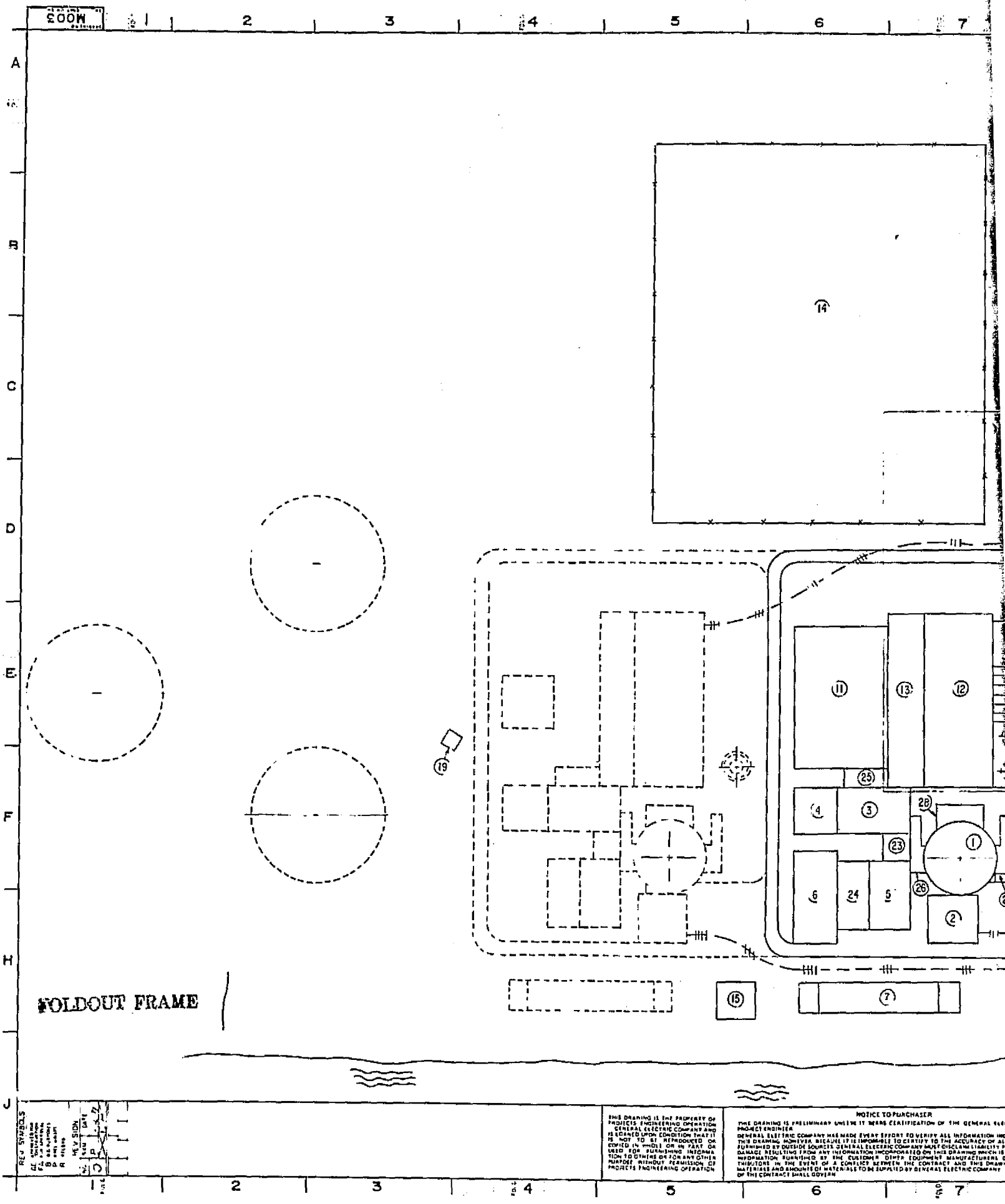

PRECEDING PAGE BLANK NOT FILMED

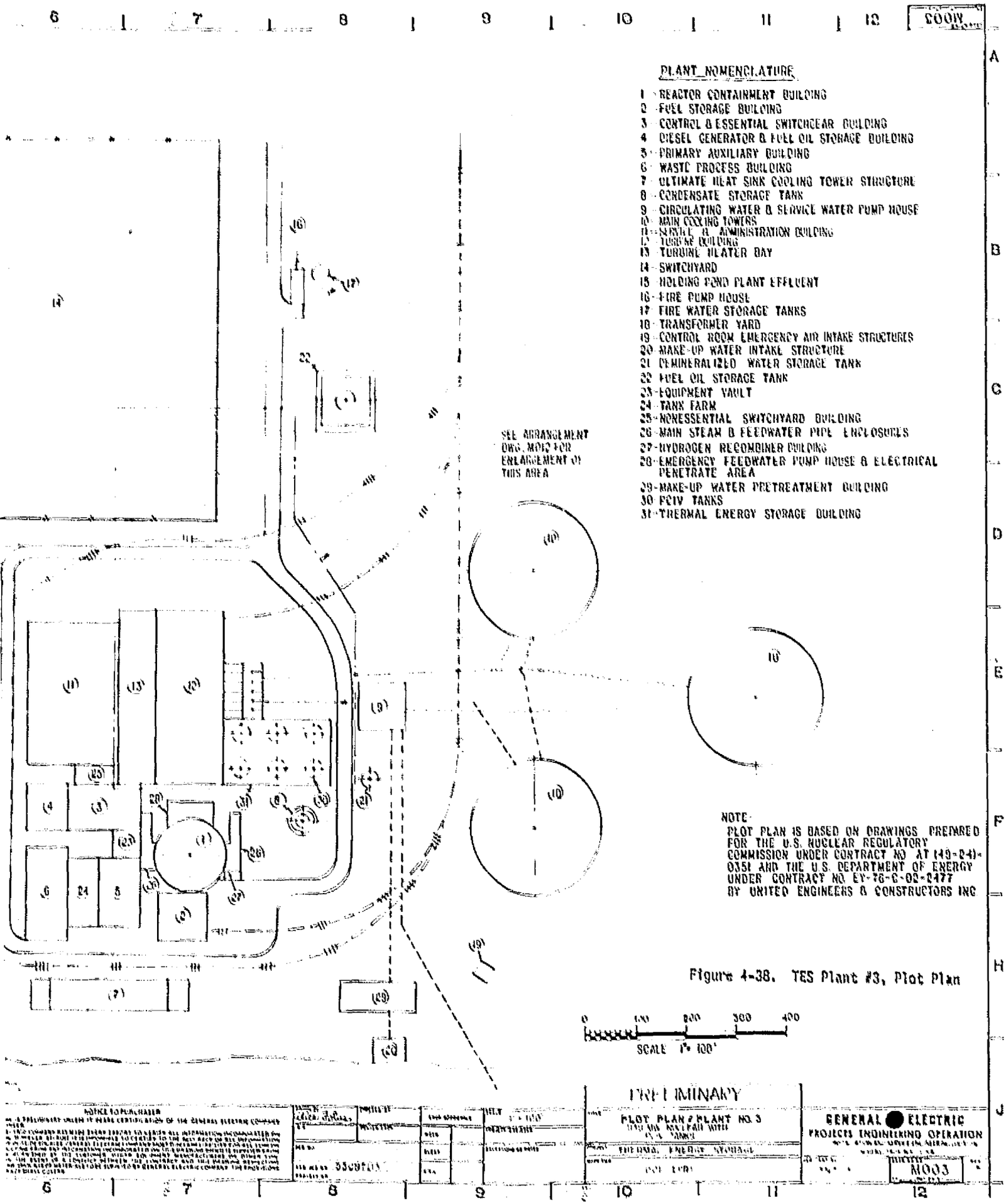

Figure 4-38. TES Plant #3, Plot Plan

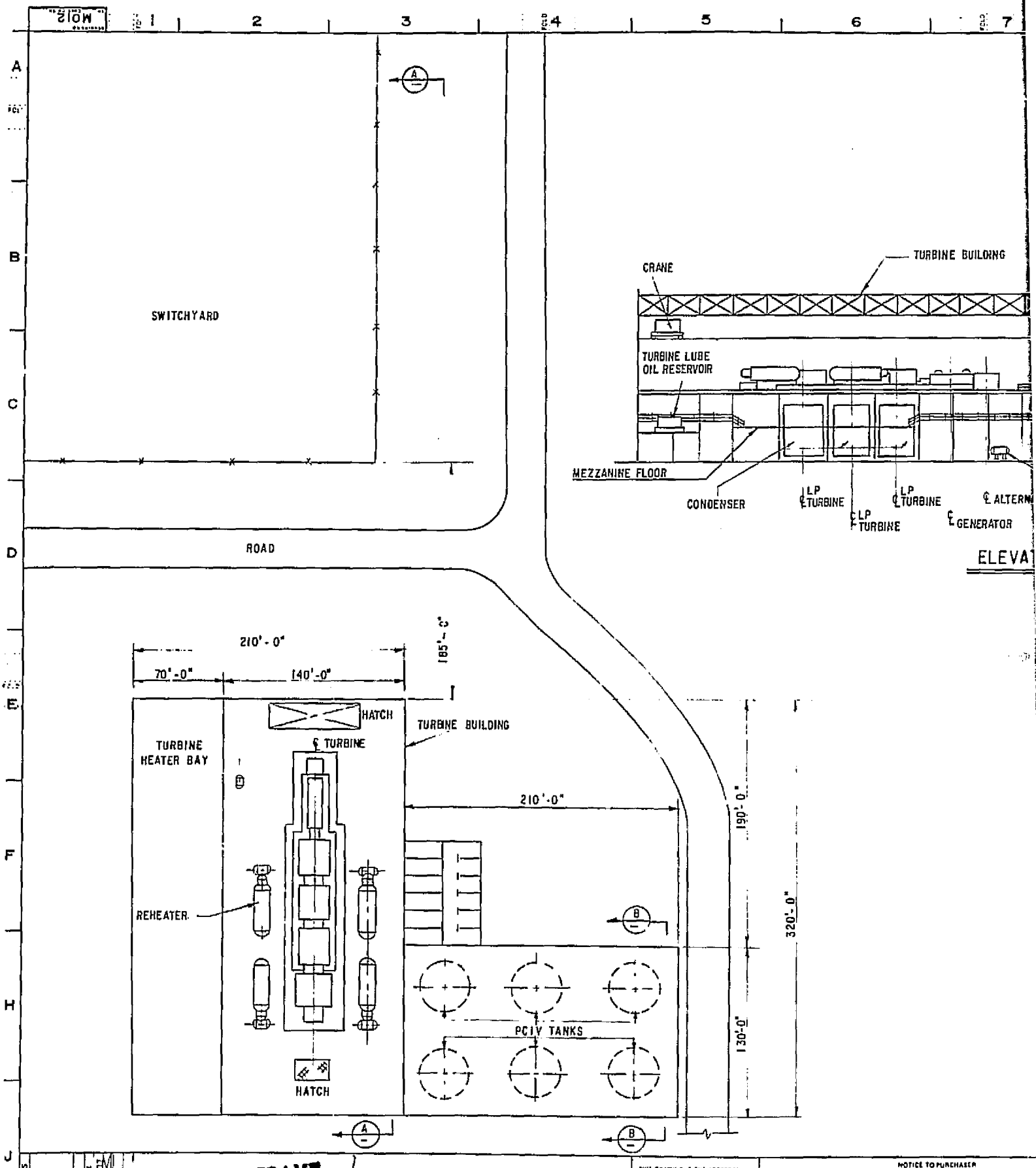

PRECEDING PAGE BLANK NOT FILMED

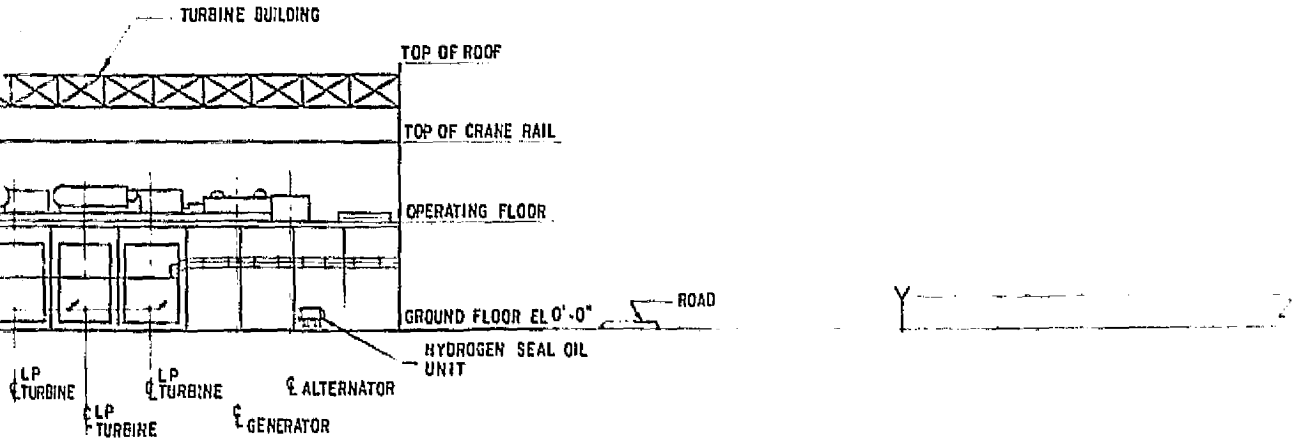

ELEVATION A-A

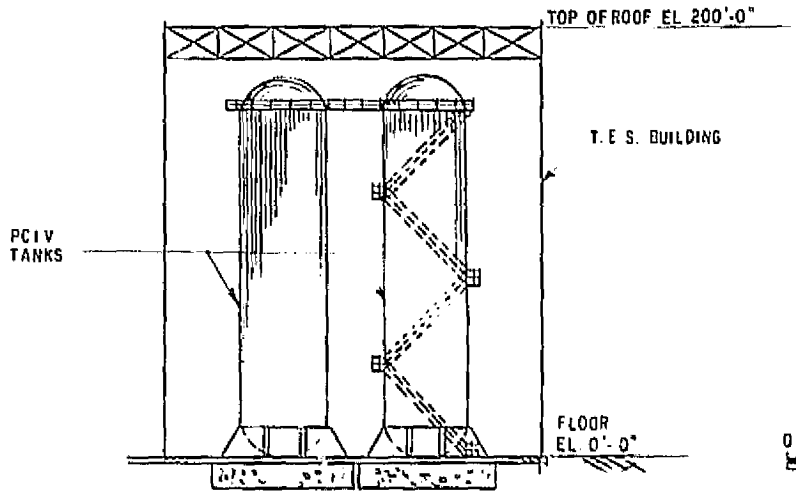

ELEVATION B-B

0 20 40 60 80 100 120 140
1" = 40'

NOTE FOR PLOT PLAN SEE M003

Figure 4-39. TES Plant #3, Equipment Arrangement

NOTICE TO PURCHASER

PRELIMINARY

ARRANGEMENT/PLANT NO 3
(50MW NUCLEAR WITH PCIV TANKS)

THERMAL ENERGY STORAGE

DOE/EPRI

1" = 40'

GENERAL ELECTRIC
PROJECTS ENGINEERING OPERATION

M012

BOILDOUT FRAME

A simplified version of TES schematic during a charging mode and discharging mode is shown in Figure 4-40.

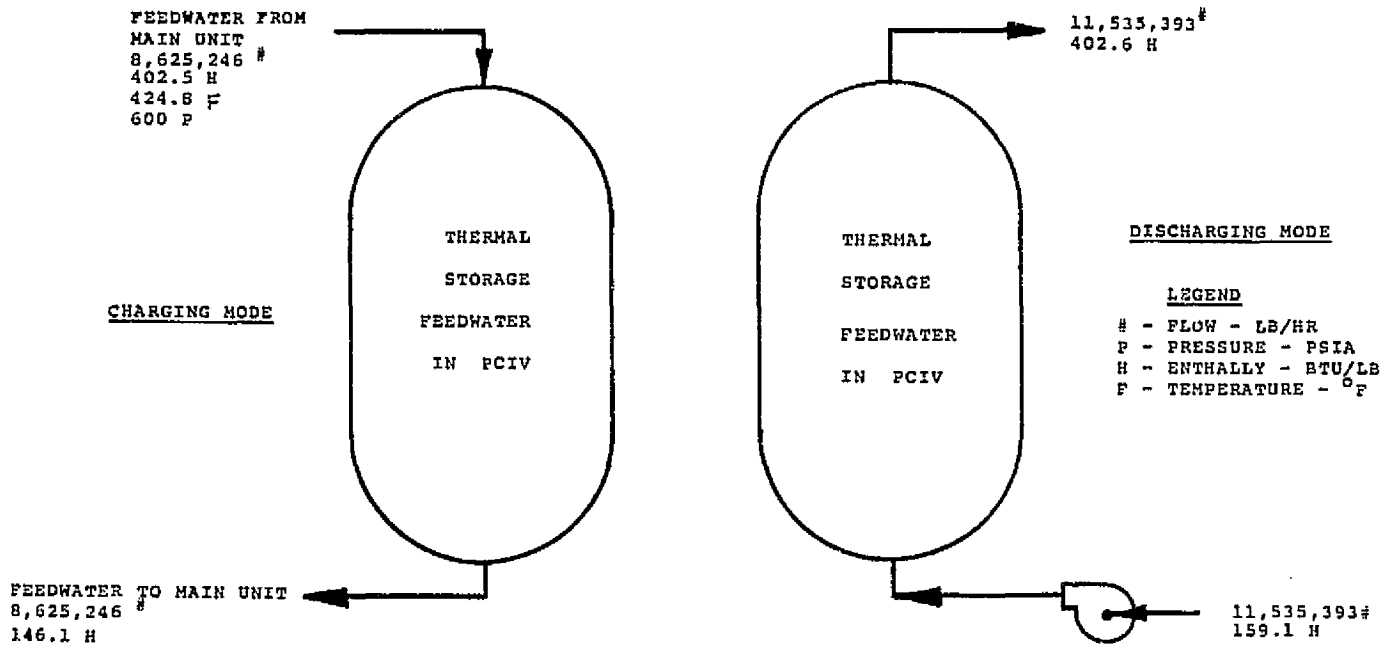

Figure 4-40. Aboveground Feedwater Storage in PCIV, Thermal Storage Schematic for LWR Plant #3

The figure shows that during a charging period of 8 hours duration feedwater from the main unit is used to charge the thermal storage. The containment pressure vessels are made from prestressed cast iron as documented in Reference 4-6. The pressure vessels have high temperature internal insulation to keep the cast iron cool. The feedwater has a flow rate of 3.91 x 10^6 kg/hr (8.63 x 10^6 lb/hr) at 4.14 MPa (600 psia) and 218.2°C (424.8°F). The thermal storage system is of the displacement type. When fully charged with thermal energy, it is filled with

PRECEDING PAGE BLANK NOT FILMED

high temperature feedwater at the desired temperature 218.2^{o}C (424.8^{o}F); when fully discharged, the water contained is all cold. So during charging as hot feedwater is supplied to the prestressed case iron vessels (PCIV), the same volume of cold water is continuously withdrawn from the PCIV. Similarly during discharging as hot feedwater is withdrawn from the PCIV, cold feedwater is continuously fed into the PCIV. Because the density of the cold feedwater is higher than that of the hot feedwater, an auxiliary storage tank is included to make up the difference in the required volume. The discharge feedwater flow rate during a discharge period of 5.98 hours duration is 5.23 x 10^6 kg/hr (11.54 x 10^6 lb/hr).

Figure 3-12 from Section 3 (page 3-71) shows the comparison of direct costs of different types of pressure vessels for high temperature water (HTW) containment. The different types of pressure vessels considered are PCIV, prestressed concrete pressure vessel (PCPV), steel and underground cavity. The above comparison points out that for the aboveground feedwater storage PCIV's have the least cost. Thus PCIV's are used in this plant for aboveground feedwater storage.

The TES system component descriptions are given in Table 4-12.

The detailed TES process flow diagrams, Figures 4-34 and 4-35, show the six PCIV's with associated feedwater piping, valves and headers. The plant arrangement drawings as shown in Figures 4-30, 4-38, and 4-39 are based on drawings as documented in NUREG-0241, Volumes 1 and 2, Reference 4-3. These figures indicate the modifications made such as incorporation of PCIV's. Figure 4-37 shows the electrical one line diagram of this plant with a different rating of the generator than the reference LWR base plant generator rating as shown in Figure 4-41.

Table 4-12

TES COMPONENT DESCRIPTIONS FOR PLANT #3 LWR PLANT WITH ABOVEGROUND FEEDWATER STORAGE

Component	Description
Feedwater Thermal Storage Tank	Six identical tanks; dish head cylindrical tank, axis vertical, installed aboveground 8000 m^3 (2,113,227 gal.) per tank, diameter of 12 m (39.4 ft).
F.W. Storage Heater	Two identical tubular heat exchangers; each has 2324.8 m^2 (25,000 ft^2) heating surface, steam on tube side and water on shell side.
Recirculation Pump	Two centrifugal pumps with 1388 liters/sec (11,000 gal/min) and 105.476 m (346 ft) TDH (water column). BHP: 1200 HP.
Make-Up Pump	Two identical centrifugal pumps with 788 liters/sec (12,500 gal/min) and 105.476 m (346 ft) TDH (water column). BHP: 1400 HP.
Control Valves	40": CV-3, CV-4, CV-5, CV-6, CV-7, CV-8, CV-9, CV-10, CV-11, CV-12, CV-1.
Piping	40" STD WT CARBON STEEL 1000 ft 30" STD WT CARBON STEEL 300 ft.

Plant #4 - Nuclear LWR Plant with Aboveground Oil/Rock Storage for Feedwater Heating

An artist rendering of this Plant #4 is shown in Figure 4-42, the performance is given in Table 4-13 (page 4-96), and the approximate auxiliary losses breakdown in Table 4-14 (page 4-96). This plant has

(Text continued on Page 4-115)

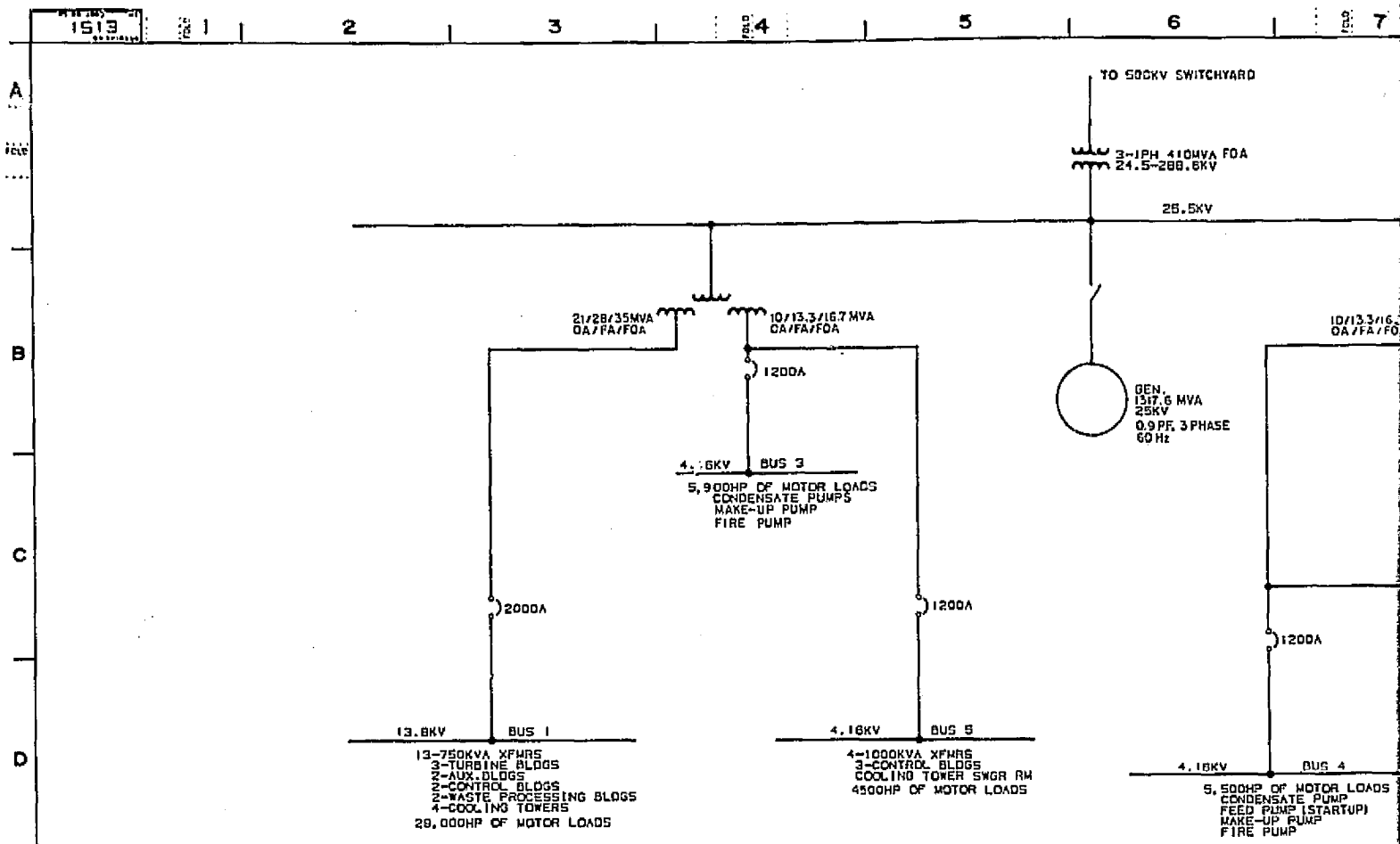

...DING PAGE BLANK NOT FILMED

THIS DRAWING IS THE PROPERTY OF PROJECTS ENGINEERING OPERATION - GENERAL ELECTRIC COMPANY AND IS LOANED UPON CONDITION THAT IT IS NOT TO BE REPRODUCED OR COPIED IN WHOLE OR IN PART OR USED FOR FURNISHING INFORMATION TO OTHERS OR FOR ANY OTHER PURPOSE WITHOUT PERMISSION OF PROJECTS ENGINEERING OPERATION

NOTICE TO PURCHASER
THIS DRAWING IS PRELIMINARY UNLESS IT BEARS CERTIFICATION OF THE PROJECT ENGINEER.
GENERAL ELECTRIC COMPANY HAS MADE EVERY EFFORT TO VERIFY ALL ... THIS DRAWING HOWEVER, BECAUSE IT IS IMPOSSIBLE TO CERTIFY TO THE ... FURNISHED BY OUTSIDE SOURCES, GENERAL ELECTRIC COMPANY MUST DISCL... DAMAGE RESULTING FROM ANY INFORMATION INCORPORATED ON THIS DRA... INFORMATION FURNISHED BY THE CUSTOMER OTHER EQUIPMENT ... TRIBUTORS IN THE EVENT OF A CONFLICT BETWEEN THE CONTRACT ... MATERIALS AND AMOUNTS OF MATERIALS TO BE SUPPLIED BY GENERAL ELECT... OF THE CONTRACT SHALL GOVERN

FOLDOUT FRAME

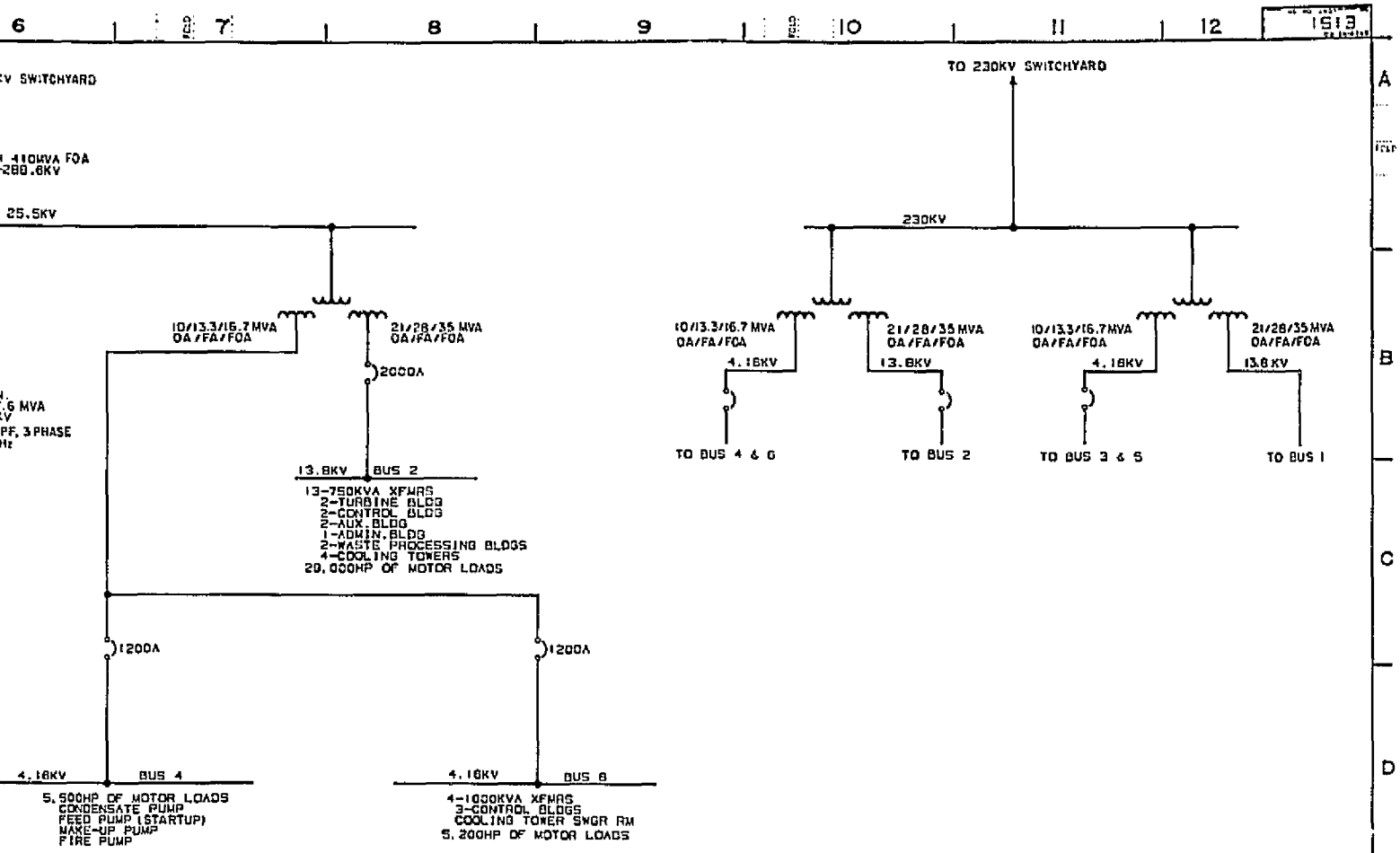

Figure 4-41. Nuclear LWR Base Plant One Line Electrical Diagram

NOTICE TO PURCHASER

ELECTRICAL ONE-LINE DIAGRAM
1139 MW PWR
REFERENCE NUCLEAR PLANT

THERMAL ENERGY STORAGE

DOE/EPRI

GENERAL ELECTRIC
PROJECTS ENGINEERING OPERATION

3N7113T

E151

FOLDOUT FRAME 2

PRECEDING PAGE BLANK NOT FILMED

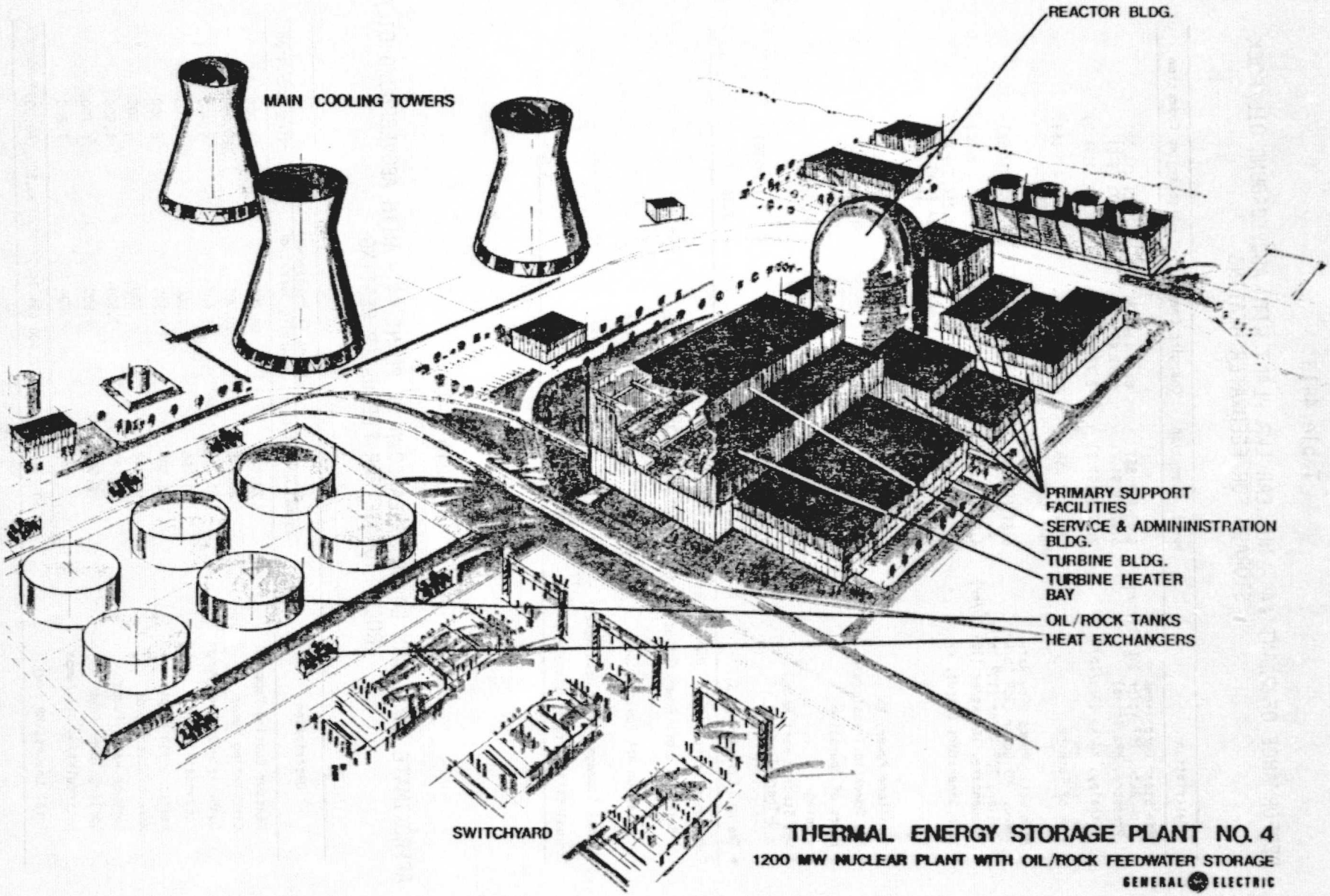

Figure 4-42. Artist Rendering of TES Plant #4

PRECEDING PAGE BLANK NOT FILMED

Table 4-13

PERFORMANCE OF PLANT #4 - NUCLEAR LWR PLANT WITH ABOVEGROUND OIL/ROCK STORAGE FOR FEEDWATER HEATING

Description	Normal Operation	Charging Operation	Discharging Operation
• Main Steam Conditions			
Flow Rate, 10^6 kg/hr (10^6 lb/hr)	6.61 (14.58)	6.61 (14.58)	6.61 (14.58)
Pressure, MPa (psia)	6.72 (975)	6.72 (975)	6.72 (975)
Enthalpy, kJ/kg (Btu/lb)	2.77 (1191.3)	2.77 (1191.3)	2.77 (1191.3)
• Type of Turbine	TC6F, 43" LSB, 1800 rpm	TC6F, 43" LSB, 1800 rpm	TC6F, 43" LSB, 1800 rpm
• Main Water Pumps Flow Rate			
Feed, 10^6 kg/hr (10^6 lb/hr)	6.61 (14.58)	11.41 (25.15)	6.61 (14.58)
Boiler, 10^6 kg/hr (10^6 lb/hr)	--	--	--
Condensate, 10^6 kg/hr (10^6 lb/hr)	4.57 (10.08)	3.41 (7.52)	5.73 (12.64)
• Main Generators Output, kW	1,124,567 kW @3" HG 1,142,314 kW @2.2" HG	900,429 kW @2" HG 920,292 kW @1.75" HG	1,254,509 kW @4.2" HG 1,282,876 kW @3" HG
• Auxiliary Power, kW	51,994	54,342	60,007
• Net Power to Transformer, kW	1,090,320	865,950	1,222,869
• Hours of Operation	10.2	8	6.04
• % Swing	--	-20.58	+12.16
• Net Station Heat Rate, $\frac{\text{J-Thermal}}{\text{J-Electric}} \left(\frac{\text{Btu}}{\text{kWh}}\right)$	3.03 (10318)	3.81 (12992)	2.70(9200)
• Thermal Efficiency, %	33.10	26.29	37.12

Turnaround Efficiency of Thermal Storage System:

Based on Gross Power Output $= \frac{6.04\,(1,282,876 - 1,142,314)}{8.0\,(1,142,314 - 920,292)} = 0.478$

Based on Net Power Output $= \frac{6.04\,(1,222,869 - 1,090,320)}{8\,(1,090,320 - 865,950)} = 0.446$

Thermal Storage System Heat Rate $= \frac{10,318.11}{0.446} = 23,139 \ \frac{\text{Btu}}{\text{kWh}}$

Thermal Efficiency of Storage System = 14.77%

Table 4-14

APPROXIMATE AUXILIARY LOSSES BREAKDOWN OF PLANT #4 - WITH ABOVEGROUND OIL/ROCK STORAGE FOR FEEDWATER HEATING

Description	Losses in Horsepower		
	Normal Operation	Charging Operation	Discharging Operation
Reactor Cooling Pumps	28,000	28,000	28,000
Circulating Pumps	20,000	20,000	20,000
Condensate Booster Pumps	7,500	5,600	9,400
Condensate Pumps	3,750	2,800	4,700
Heater Drain Pumps	2,500	2,500	2,500
Makeup Water Pumps	500	500	500
Service Water Pumps	1,500	1,500	1,500
Cooling Tower Fans	6,000	4,800	6,700
Recirculating Oil Pumps	--	7,200	7,200
Total Losses, HP (kW)	69,750 (51,994)	72,900 (54,342)	80,500 (60,007)

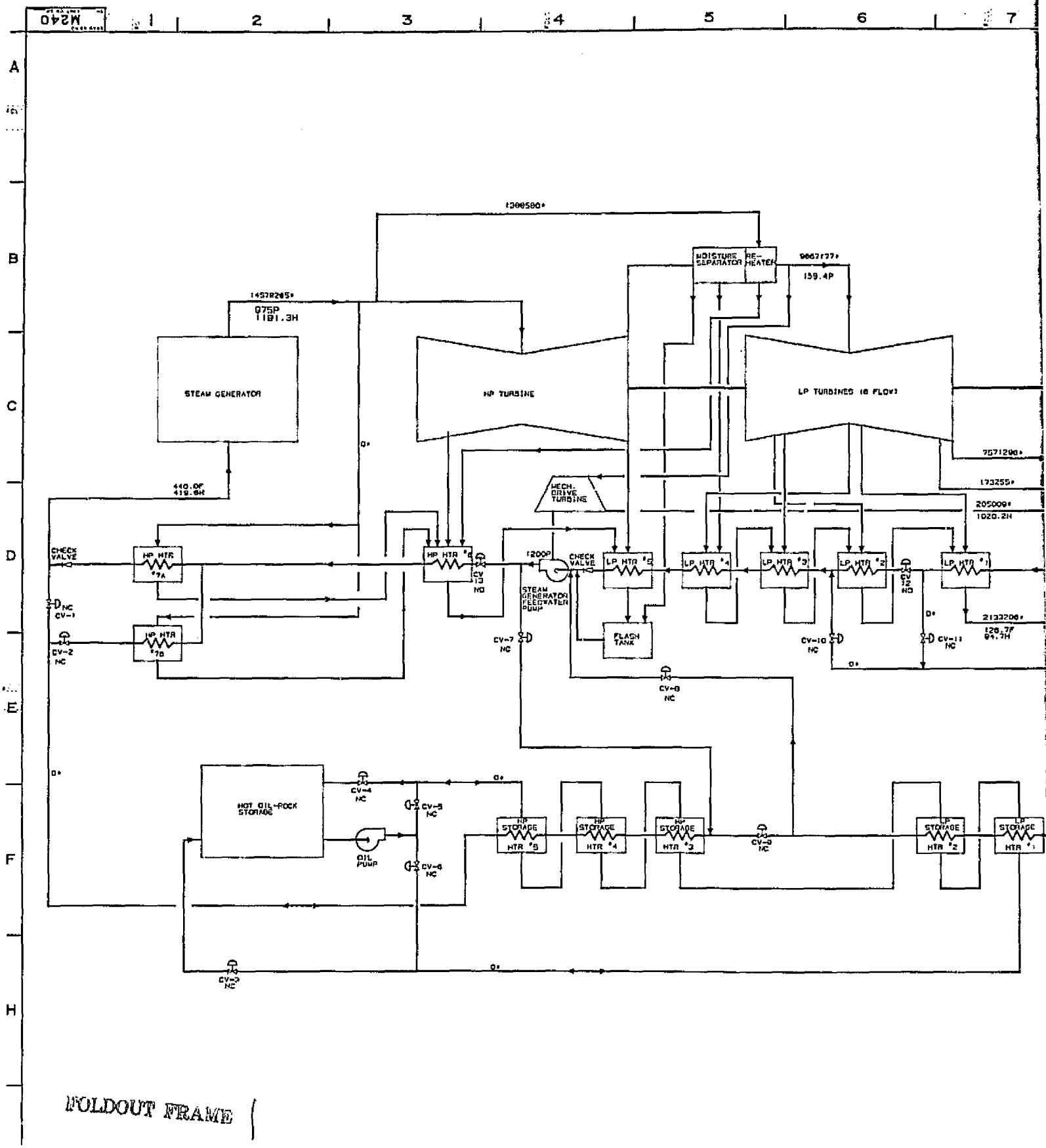

FOLDOUT FRAME 1

THIS DRAWING IS THE PROPERTY OF PROJECTS ENGINEERING OPERATION GENERAL ELECTRIC COMPANY AND IS LOANED UPON CONDITION THAT IT IS NOT TO BE REPRODUCED OR COPIED IN WHOLE OR IN PART OR USED FOR FURNISHING INFORMATION TO OTHERS OR FOR ANY OTHER PURPOSE WITHOUT PERMISSION OF PROJECTS ENGINEERING OPERATION

NOTICE TO PURCHASER

THIS DRAWING IS PRELIMINARY UNLESS IT BEARS CERTIFICATION OF THE GENERAL PROJECTS ENGINEER

GENERAL ELECTRIC COMPANY HAS MADE EVERY EFFORT TO VERIFY ALL INFORMATION THIS DRAWING HOWEVER BECAUSE IT IS IMPOSSIBLE TO CERTIFY TO THE ACCURACY OF FURNISHED BY OUTSIDE SOURCES GENERAL ELECTRIC COMPANY MUST DISCLAIM LIABILITY DAMAGE RESULTING FROM ANY INFORMATION INCORPORATED ON THIS DRAWING WHICH INFORMATION FURNISHED BY THE CUSTOMER OTHER EQUIPMENT MANUFACTURERS TRIBUTORS IN THE EVENT OF A CONFLICT BETWEEN THE CONTRACT AND THIS DRAWING MATERIALS AND AMOUNTS OF MATERIALS TO BE SUPPLIED BY GENERAL ELECTRIC COMPANY OF THE CONTRACT SHALL GOVERN

PRECEDING PAGE BLANK NOT FILMED

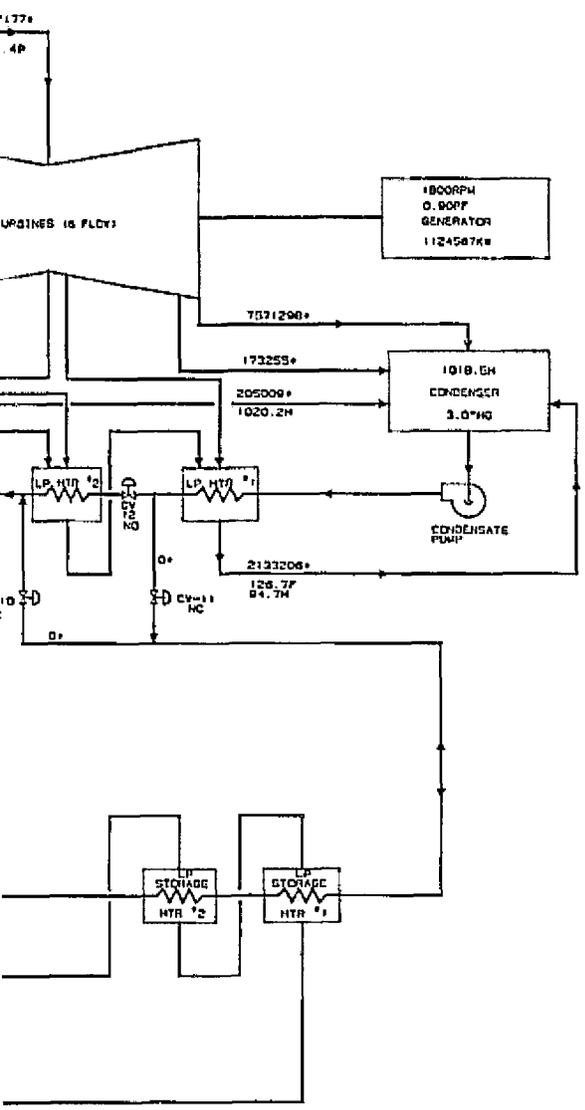

PERFORMANCE DATA

DESCRIPTION	BASE OPERATION
• MAIN STEAM CONDITIONS FROM REACTOR,	
FLOW, 10^6 LB/HR	14.578265
PRESSURE, PSIA	975
ENTHALPY, BTU/LB	1191.3
• TYPE OF TURBINE	TCDF, 43"LSB 1800RPM
• MAIN WATER PUMPS FLOW RATE,	
FEEDWATER, 10^6 LB/HR	14.58
CONDENSATE, 10^6 LB/HR	10.08
• MAIN GENERATOR OUTPUT	1,124,567KW @ 3"HG
• AUXILARY POWER, KW	51,994
• NET POWER TO TRANSFORMERS, KW	1,083,563
• HOURS OF OPERATION	10.2
• % SWING	-
• NET STATION HEAT RATE, BTU/KW-HR	10477
• THERMAL EFFICIENCY, %	33

LEGEND

*=FLOW-LB/HR
P=PRESSURE-PSIA
H=ENTHALPY-BTU/LB
F=TEMPERATURE-DEG.F

Figure 4-43. TES Plant #4, Heat and Mass Balance Numbers for Base Cycle

BASE CYCLE

NOTICE TO PURCHASER

HEAT & MASS BALANCE DIAGRAM
1.25 MW BASE PWR PLANT
DUAL MEDIA THERMAL ENERGY STORAGE

THERMAL ENERGY STORAGE

DOE EPRI

GENERAL ELECTRIC
PROJECTS ENGINEERING OPERATION

M240

FOLDOUT FRAME 2

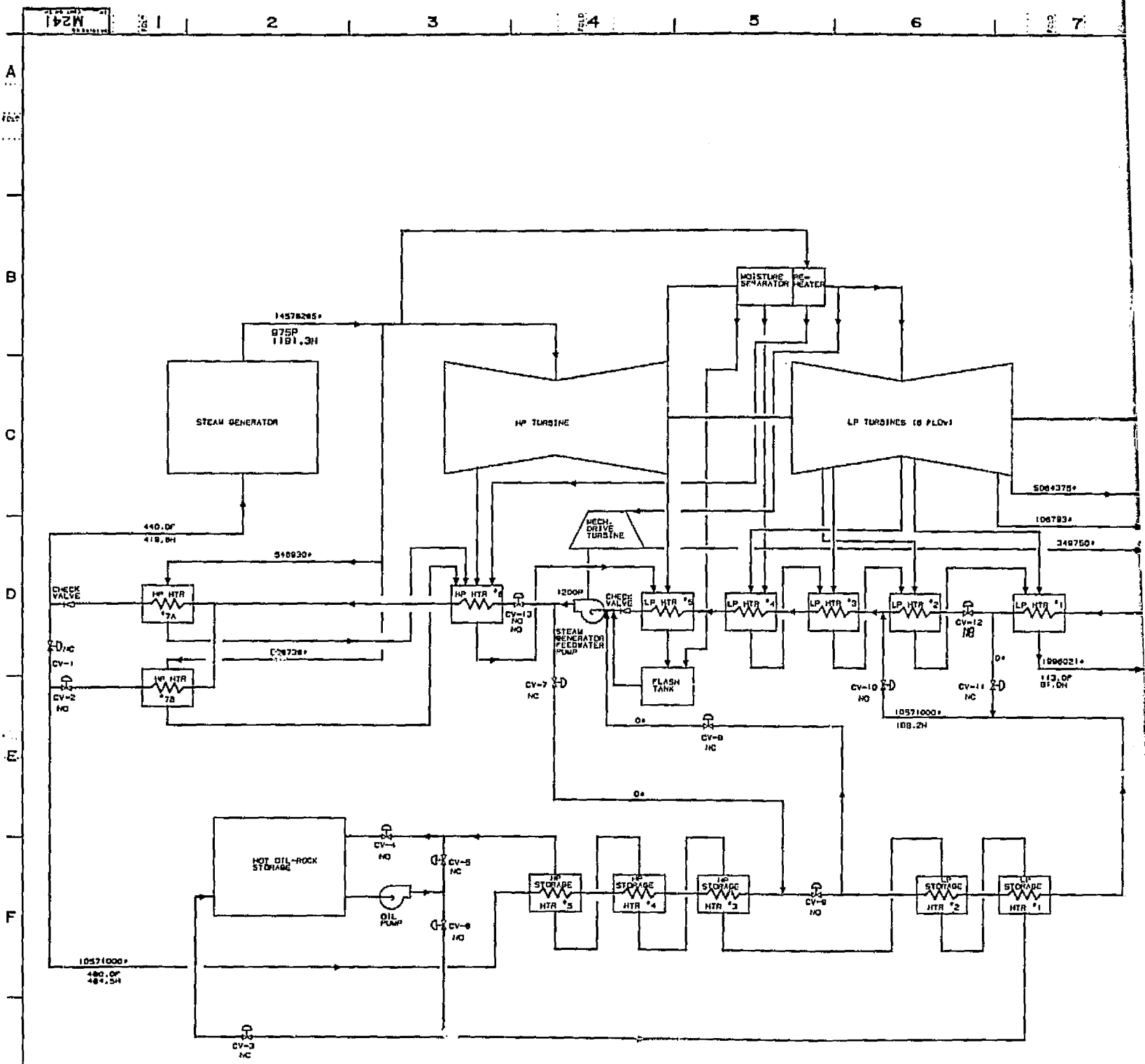

PRECEDING PAGE BLANK NOT FILMED

THIS DRAWING IS THE PROPERTY OF PROJECTS ENGINEERING OPERATION GENERAL ELECTRIC COMPANY AND IS LOANED UPON CONDITION THAT IT IS NOT TO BE REPRODUCED OR COPIED IN WHOLE OR IN PART OR USED FOR FURNISHING INFORMATION TO OTHERS OR FOR ANY OTHER PURPOSE WITHOUT PERMISSION OF PROJECTS ENGINEERING OPERATION

NOTICE TO PURCHASER

THIS DRAWING IS PRELIMINARY UNLESS IT BEARS CERTIFICATION OF THE GENERAL ELECTRIC PROJECT ENGINEER

GENERAL ELECTRIC COMPANY HAS MADE EVERY EFFORT TO VERIFY ALL INFORMATION INCORPO THIS DRAWING HOWEVER BECAUSE IT IS IMPOSSIBLE TO CERTIFY TO THE ACCURACY OF ALL INFO FURNISHED BY OUTSIDE SOURCES GENERAL ELECTRIC COMPANY MUST DISCLAIM LIABILITY FOR AL DAMAGE RESULTING FROM ANY INFORMATION INCORPORATED ON THIS DRAWING WHICH IS SUPPL INFORMATION FURNISHED BY THE CUSTOMER OTHER EQUIPMENT MANUFACTURERS OR OT TRIBUTORS IN THE EVENT OF A CONFLICT BETWEEN THE CONTRACT AND THIS DRAWING RE MATERIALS AND AMOUNTS OF MATERIALS TO BE SUPPLIED BY GENERAL ELECTRIC COMPANY THE P OF THE CONTRACT SHALL GOVERN

FOLDOUT FRAME

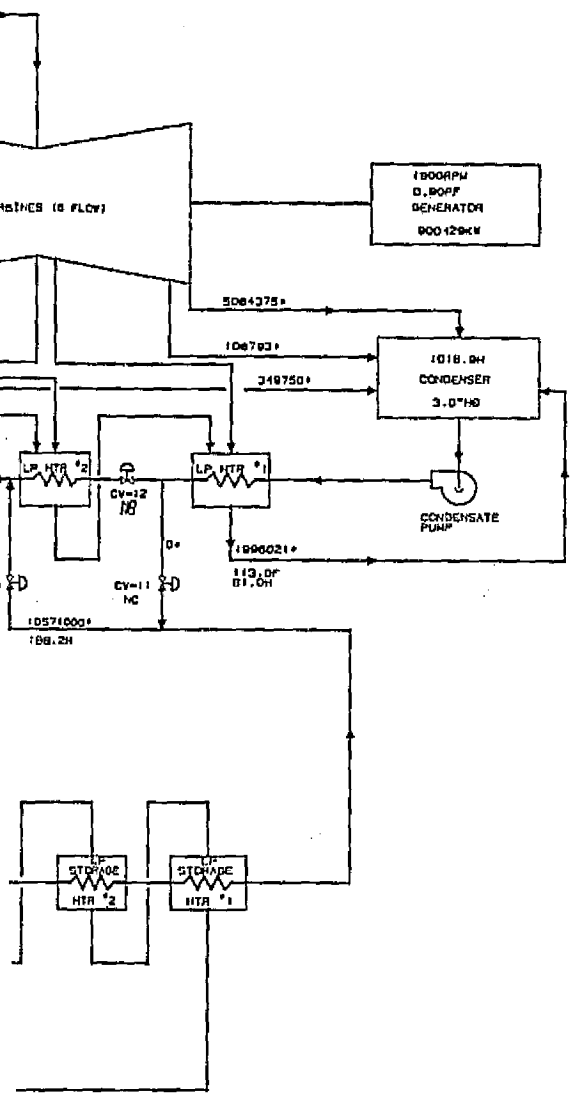

PERFORMANCE DATA

DESCRIPTION	CHARGING OPERATION
• MAIN STEAM CONDITIONS FROM REACTOR,	
FLOW, 10^6LB/HR	14.56
PRESSURE, PSIA	975
ENTHALPY, BTU/LB	1191.3
• TYPE OF TURBINE	TC6F, 43"LSB 1800RPM
• MAIN WATER PUMPS FLOW RATE, FEED, 10^6LB/HR	25.15
CONDENSATE, 10^6LB/HR	7.52
• MAIN GENERATOR OUTPUT	900,429KW @ 2"HG
• AUXILARY POWER, KW	54,342
• NET POWER TO TRANSFORMERS, KW	846,087
• HOURS OF OPERATION	8
• % SWING	-22
• NET STATION HEAT RATE, BTU/KW-HR	13240
• THERMAL EFFICIENCY, %	26

LEGEND

*=FLOW-LB/HR
P=PRESSURE-PSIA
H=ENTHALPY-BTU/LB
F=TEMPERATURE-DEG.F

Figure 4-44. TES Plant #4, Heat and Mass Balance Numbers for Charging Cycle

CHARGING CYCLE

NOTICE TO PURCHASER
PRELIMINARY UNLESS IT BEARS CERTIFICATION OF THE GENERAL ELECTRIC COMPANY

COMPANY HAS MADE EVERY EFFORT TO VERIFY ALL INFORMATION INCORPORATED ON THIS DRAWING. BECAUSE IT IS IMPOSSIBLE TO CERTIFY TO THE ACCURACY OF ALL INFORMATION FROM SOURCES GENERAL ELECTRIC COMPANY MUST DISCLAIM LIABILITY FOR ALL LOSS OR DAMAGE FROM ANY INFORMATION INCORPORATED ON THIS DRAWING WHICH IS SUPPLIED FROM THIRD PARTY BY THE CUSTOMER, OTHER EQUIPMENT MANUFACTURERS OR OTHER CONSULTANTS. IN EVENT OF A CONFLICT BETWEEN THE CONTRACT AND THIS DRAWING RESPECTING THE USE OF MATERIALS TO BE SUPPLIED BY GENERAL ELECTRIC COMPANY THE PROVISIONS OF THE CONTRACT SHALL GOVERN

DRAWN BY	
CHECKED BY	
DATE	
REF TO FORM	
MFG CO	530N7113
MFG JOB NO	
PROJECT NO	
TITLE	HEAT & MASS BALANCE DIAGRAM 1125 MW BASE PWR PLANT DUAL MEDIA THERMAL ENERGY STORAGE
PROJECT	THERMAL ENERGY STORAGE
MADE FOR	DOE. EPRI
GENERAL ELECTRIC PROJECTS ENGINEERING OPERATION	
DRAWING NO	3N7113T
SHEET NO	M241
REV	1

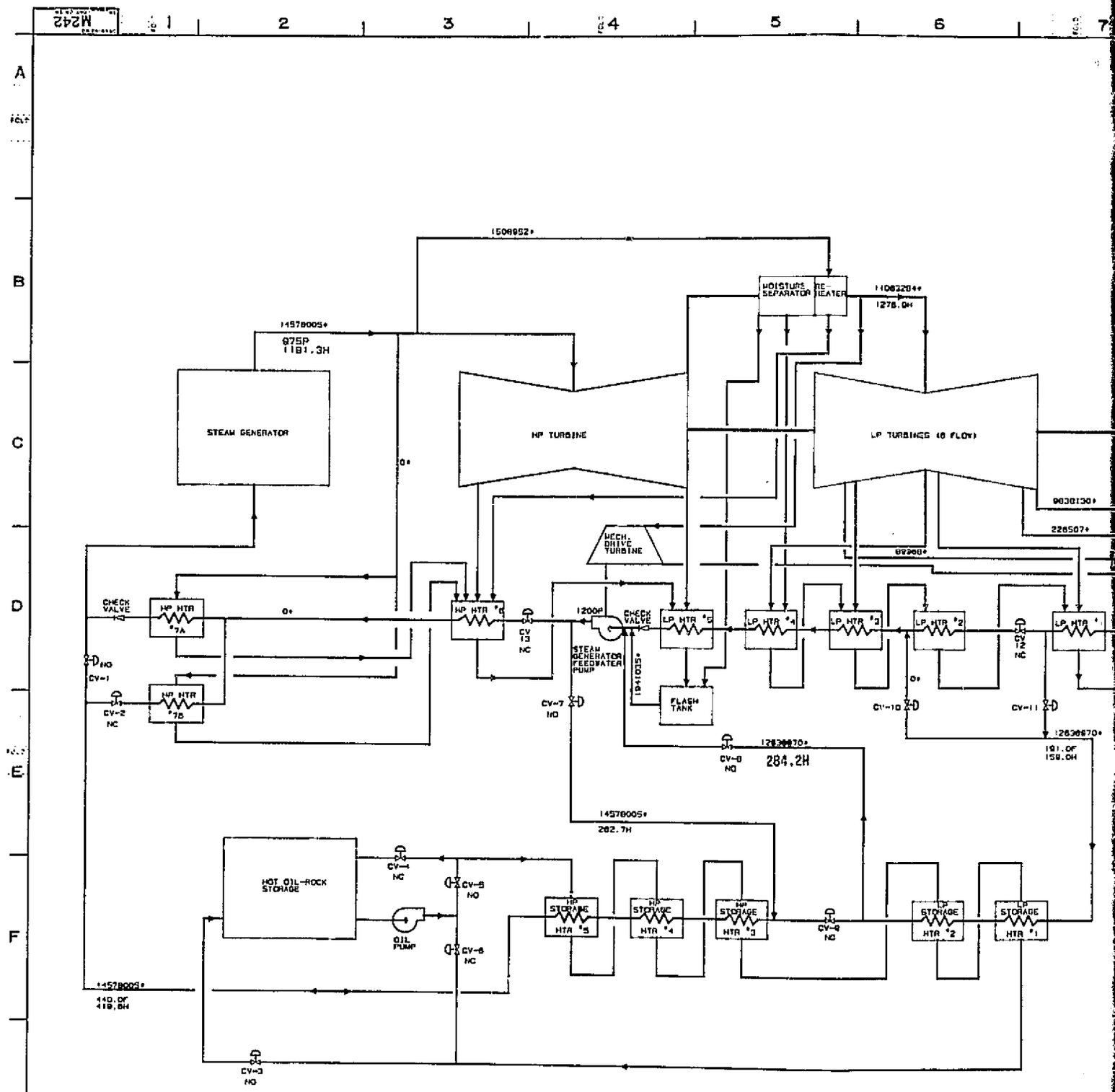

FOLDOUT FRAME

PRECEDING PAGE BLANK NOT FILMED

THIS DRAWING IS THE PROPERTY OF PROJECTS ENGINEERING OPERATION GENERAL ELECTRIC COMPANY AND IS LOANED UPON CONDITION THAT IT IS NOT TO BE REPRODUCED OR COPIED IN WHOLE OR IN PART OR USED FOR FURNISHING INFORMATION TO OTHERS OR FOR ANY OTHER PURPOSE WITHOUT PERMISSION OF PROJECTS ENGINEERING OPERATION

NOTICE TO PURCHASER

THIS DRAWING IS PRELIMINARY UNLESS IT BEARS CERTIFICATION OF THE GE PROJECT ENGINEER

GENERAL ELECTRIC COMPANY HAS MADE EVERY EFFORT TO VERIFY ALL INFORMATION THIS DRAWING HOWEVER BECAUSE IT IS IMPOSSIBLE TO CERTIFY TO THE ACCURACY FURNISHED BY OUTSIDE SOURCES GENERAL ELECTRIC COMPANY MUST DISCLAIM DAMAGE RESULTING FROM ANY INFORMATION INCORPORATED ON THIS DRAWING INFORMATION FURNISHED BY THE CUSTOMER OTHER EQUIPMENT MANUFACTURERS IN THE EVENT OF A CONFLICT BETWEEN THE CONTRACT AND THIS MATERIALS AND AMOUNTS OF MATERIALS TO BE SUPPLIED BY GENERAL ELECTRIC OF THE CONTRACT SHALL GOVERN

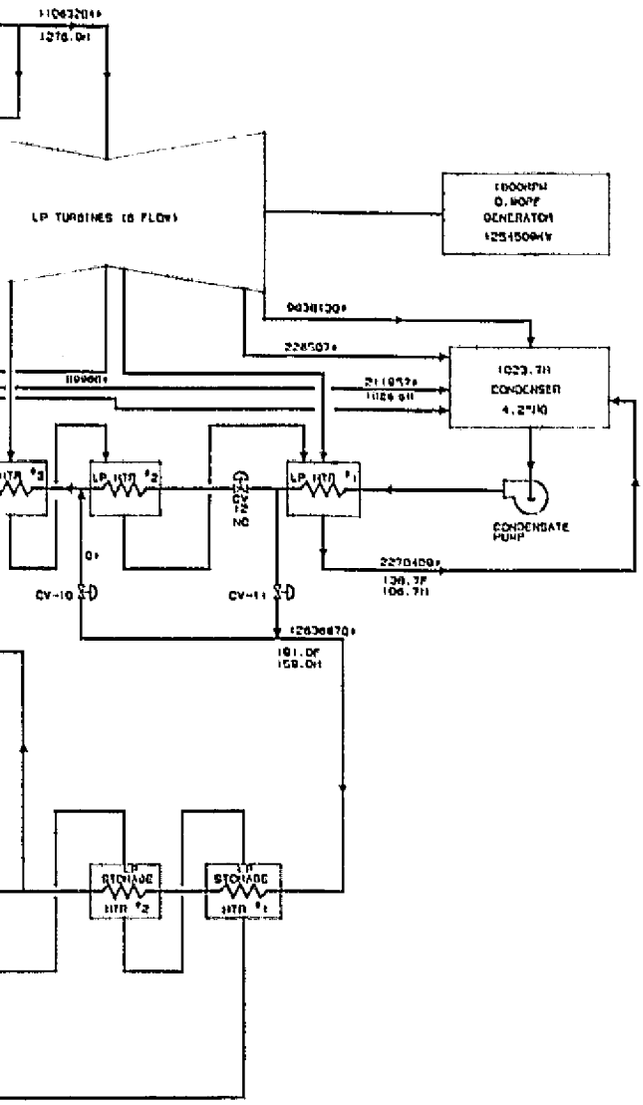

PERFORMANCE DATA

DESCRIPTION	DISCHARGING OPERATION
• MAIN STEAM CONDITIONS FROM REACTOR,	
FLOW, 10^6LB/HR	12.58
PRESSURE, PSIA	975
ENTHALPY, BTU/LB	1101.3
• TYPE OF TURBINE	TCDF, 43"LSB 1800RPM
• MAIN WATER PUMPS FLOW RATE,	
FEED, 10^6LB/HR	14.58
CONDENSATE, 10^6LB/HR	12.84
• MAIN GENERATOR OUTPUT	1,254,509 @ 4.2"HG
• AUXILARY POWER, KW	60,007
• NET POWER TO TRANSFORMERS, KW	1,194,502
• HOURS OF OPERATION	6.64
• % SWING	10
• NET STATION HEAT RATE, BTU/KW-HR	9,301
• THERMAL EFFICIENCY, %	30

LEGEND

F: FLOW-LB/HR
P: PRESSURE-PSIA
H: ENTHALPY-BTU/LB
F: TEMPERATURE-DEG.F

Figure 4-45. TES Plant #4, Heat and Mass Balance Numbers for Discharging Cycle

DISCHARGING CYCLE

NOTICE TO PURCHASER

HEAT & MASS BALANCE DIAGRAM
1125 MW BASE PWR PLANT
DUAL MEDIA THERMAL ENERGY STORAGE

GENERAL ELECTRIC
PROJECTS ENGINEERING OPERATION

M242

FOLDOUT FRAME 2

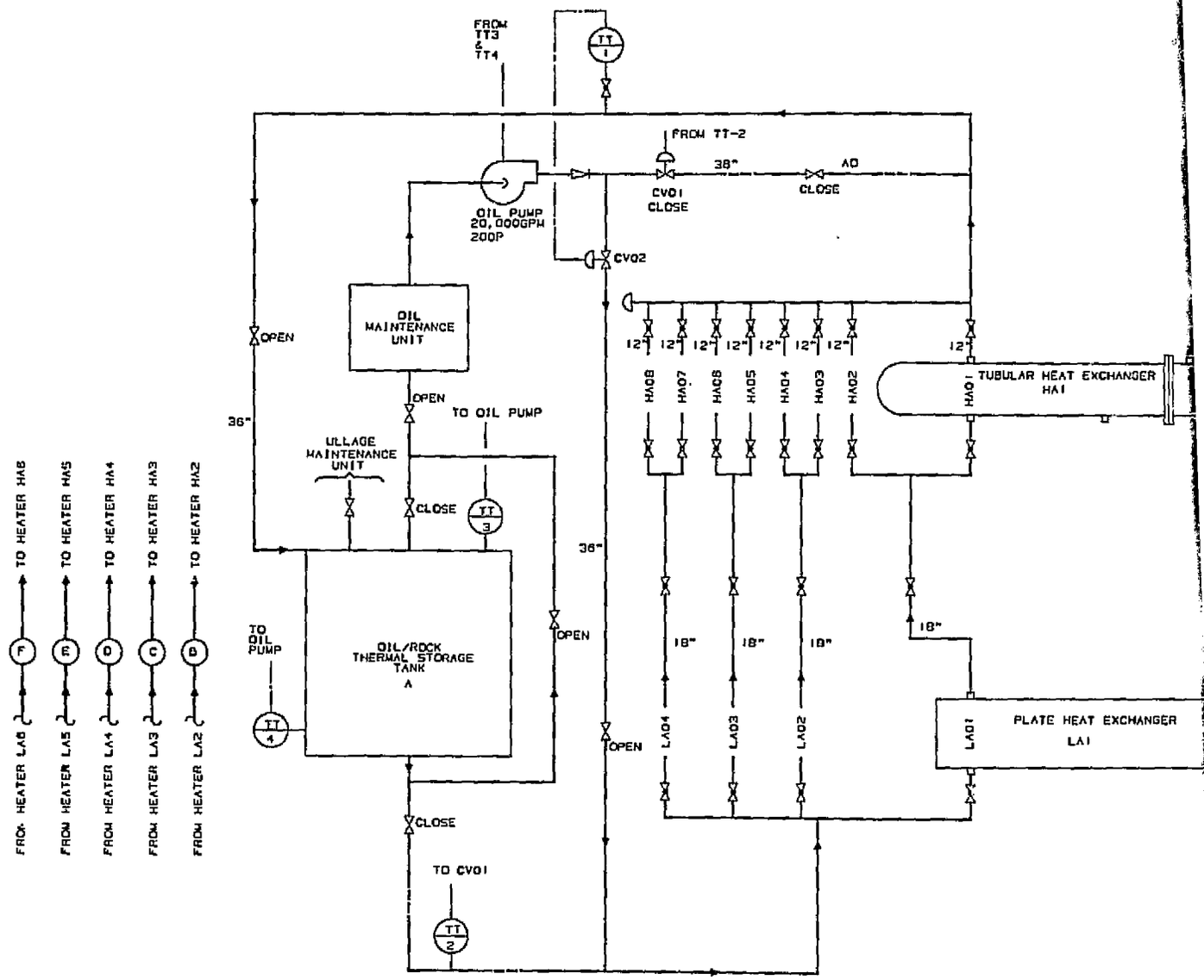

OIL LOOP

VALVES:

V 0 1

TYPE	SERVICE	VALVE NO.
V:VALVE	O:OIL	DIGITAL
CV:CONTROL VALVE	W:WATER	NUMBER

HEAT EXCHANGER:

H A 0 1

TYPE	GROUP	FLUID SIDE	HEAT
H:HIGH PRESSURE (TUBULAR)	A:GROUP A	O:OIL SIDE	
L:LOW PRESSURE (PLATE)	B:GROUP B	W:WATER SIDE	
	C:GROUP C		
	D:GROUP D		
	E:GROUP E		
	F:GROUP F		

PRECEDING PAGE BLANK NOT FILMED

REV SYMBOLS

REVISION

THIS DRAWING IS THE PROPERTY OF PROJECTS ENGINEERING OPERATION GENERAL ELECTRIC COMPANY AND IS LOANED UPON CONDITION THAT IT IS NOT TO BE REPRODUCED OR COPIED IN WHOLE OR IN PART OR USED FOR FURNISHING INFORMATION TO OTHERS OR FOR ANY OTHER PURPOSE WITHOUT PERMISSION OF PROJECTS ENGINEERING OPERATION

NOTICE TO PURCHASER

THIS DRAWING IS PRELIMINARY UNLESS IT BEARS CERTIFICATION OF THE PROJECT ENGINEER

GENERAL ELECTRIC COMPANY HAS MADE EVERY EFFORT TO VERIFY ALL THIS DRAWING HOWEVER BECAUSE IT IS IMPOSSIBLE TO CERTIFY TO THE FURNISHED BY OUTSIDE SOURCES GENERAL ELECTRIC COMPANY MUST DISC DAMAGE RESULTING FROM ANY INFORMATION INCORPORATED ON THIS DR INFORMATION FURNISHED BY THE CUSTOMER OTHER EQUIPMENT MA THEREFORE IN THE EVENT OF A CONFLICT BETWEEN THE CONTRACT MATERIALS AND AMOUNTS OF MATERIALS TO BE SUPPLIED BY GENERAL ELE OF THE CONTRACT SHALL GOVERN

FOLDOUT FRAME

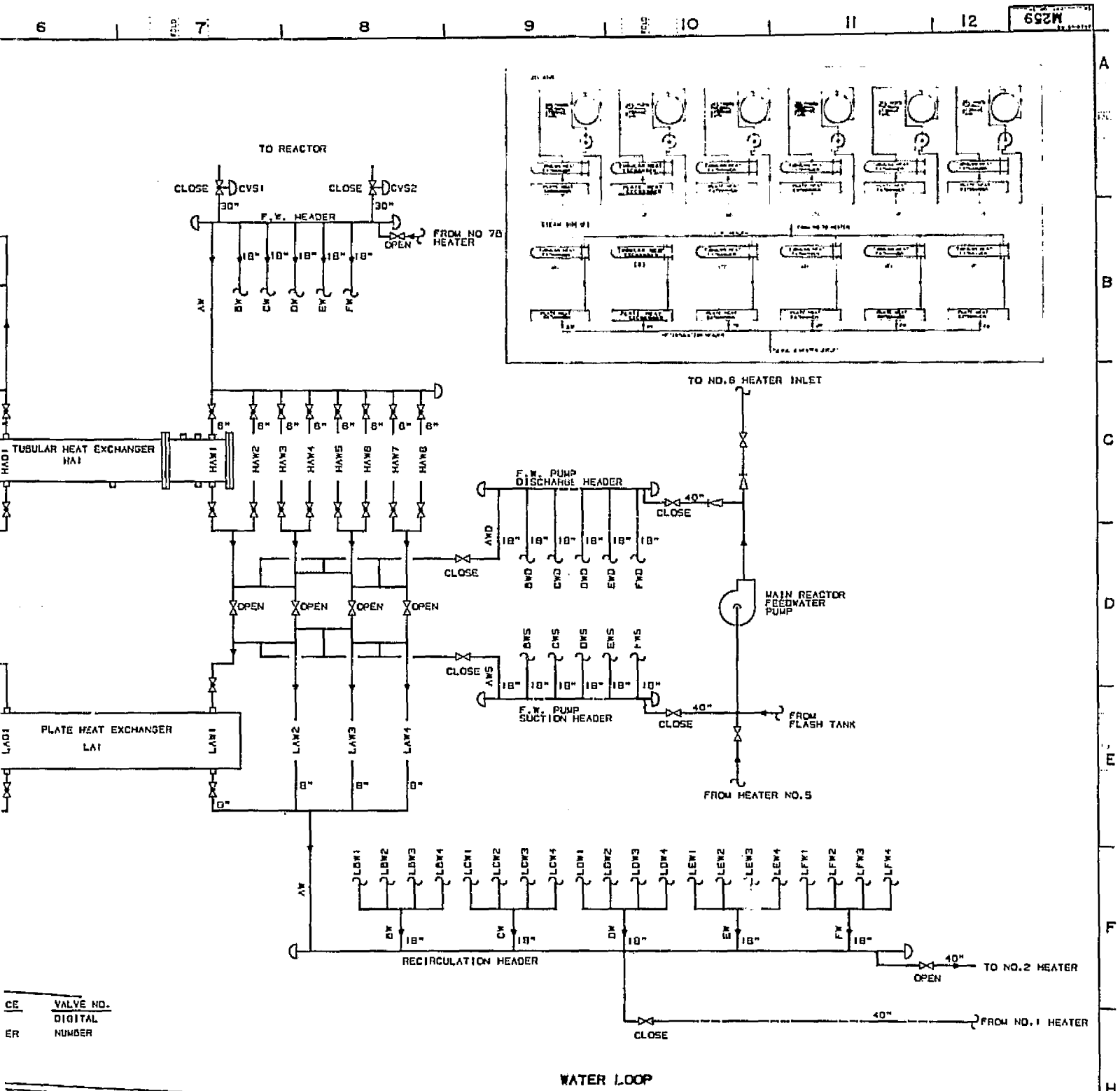

Figure 4-46. TES Plant #4, Thermal Storage System Flow Diagram - Charging Operation

CHARGE OPERATION

NOTICE TO PURCHASER: IS PRELIMINARY UNLESS IT BEARS CERTIFICATION OF THE GENERAL ELECTRIC COMPANY ... THIS COMPANY HAS MADE EVERY EFFORT TO VERIFY ALL INFORMATION INCORPORATED ON HOWEVER BECAUSE IT IS IMPOSSIBLE TO CERTIFY TO THE ACCURACY OF ALL INFORMATION OUTSIDE SOURCES GENERAL ELECTRIC COMPANY MUST DISCLAIM LIABILITY FOR ALL LOSS OR ... FROM ANY INFORMATION INCORPORATED ON THIS DRAWING WHICH IS SUPPLIED FROM FURNISHED BY THE CUSTOMER OTHER EQUIPMENT MANUFACTURERS OR OTHER CON... THE EVENT OF A CONFLICT BETWEEN THE CONTRACT AND THIS DRAWING RESPECTING AMOUNTS OF MATERIALS TO BE SUPPLIED BY GENERAL ELECTRIC COMPANY THE PROVISIONS ... SHALL GOVERN

SCALE: NONE	STORAGE SYSTEM FLOW DIAGRAM 1125MW BASE PWR PLANT DUAL MEDIA THERMAL ENERGY STORAGE	GENERAL ELECTRIC PROJECTS ENGINEERING OPERATION	
MADE FOR: DOE/EPRI		3N7113T	M259

FOLDOUT FRAME 2

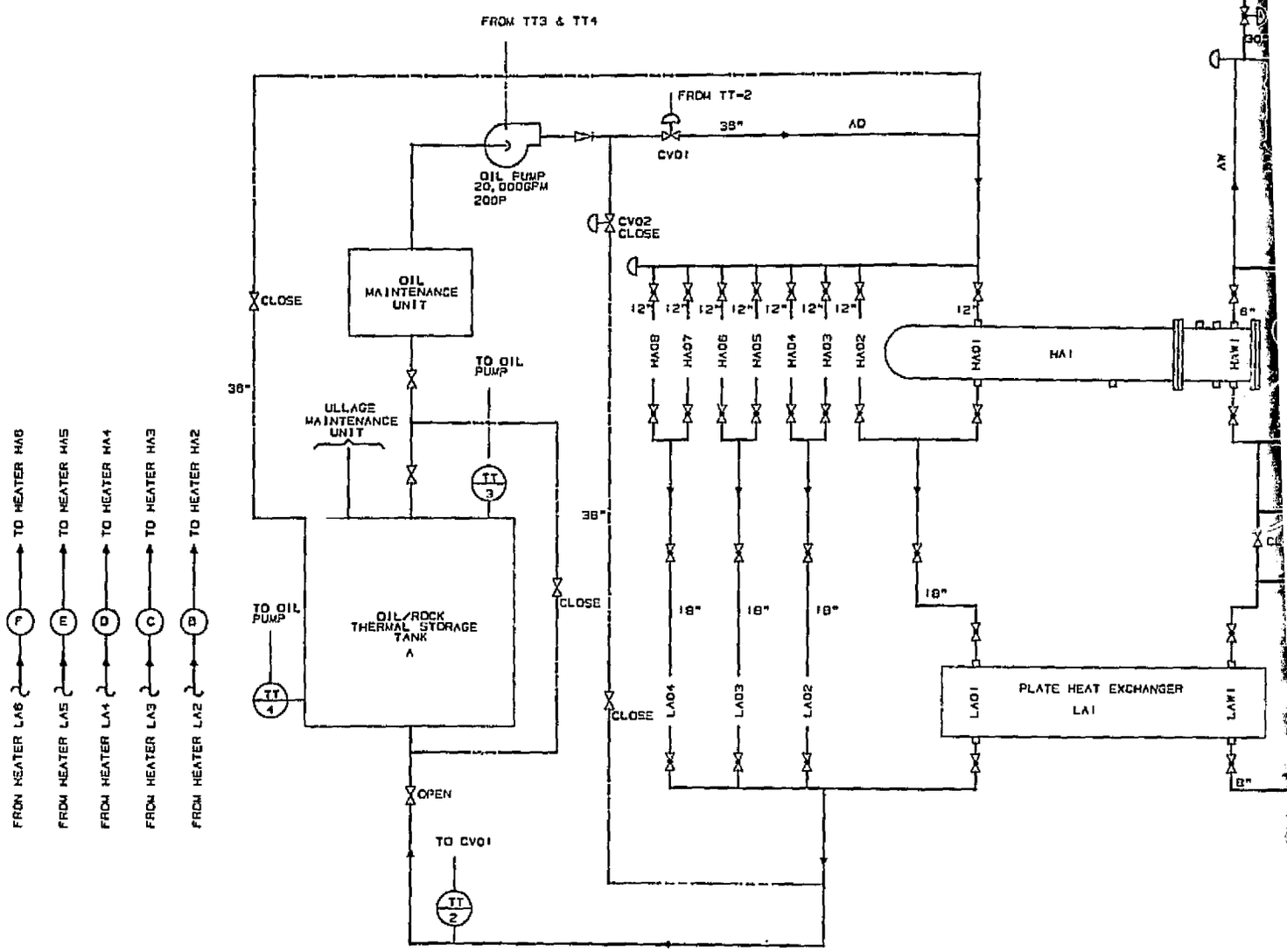

OIL LOOP

VALVES:

V 0 1

TYPE	SERVICE	VALVE NO.
V:VALVE	O:OIL	DIGITAL
CV:CONTROL VALVE	W:WATER	NUMBER

HEAT EXCHANGER:

H A 0 1

TYPE	GROUP	FLUID SIDE	HEAT EXCHANGER
H:HIGH PRESSURE (TUBULAR)	A:GROUP A	O:OIL SIDE	DIGITAL
L:LOW PRESSURE (PLATE)	B:GROUP B	W:WATER SIDE	NUMBER
	C:GROUP C		
	D:GROUP D		
	E:GROUP E		
	F:GROUP F		

PRECEDING PAGE BLANK NOT FILMED

REV SYMBOLS

REVISION

THIS DRAWING IS THE PROPERTY OF PROJECTS ENGINEERING OPERATION - GENERAL ELECTRIC COMPANY AND IS LOANED UPON CONDITION THAT IT IS NOT TO BE REPRODUCED OR COPIED IN WHOLE OR IN PART OR USED FOR FURNISHING INFORMATION TO OTHERS OR FOR ANY OTHER PURPOSE WITHOUT PERMISSION OF PROJECTS ENGINEERING OPERATION

NOTICE TO PURCHASER

THIS DRAWING IS PRELIMINARY UNLESS IT BEARS CERTIFICATION OF THE GENERAL ELECTRIC PROJECT ENGINEER.

GENERAL ELECTRIC COMPANY HAS MADE EVERY EFFORT TO VERIFY ALL INFORMATION INCO THIS DRAWING HOWEVER BECAUSE IT IS IMPOSSIBLE TO CERTIFY TO THE ACCURACY OF ALL FURNISHED BY OUTSIDE SOURCES, GENERAL ELECTRIC COMPANY MUST DISCLAIM LIABILITY FO DAMAGE RESULTING FROM ANY INFORMATION INCORPORATED ON THIS DRAWING WHICH IS P INFORMATION FURNISHED BY THE CUSTOMER, OTHER EQUIPMENT MANUFACTURERS OR FURNISHERS. IN THE EVENT OF A CONFLICT BETWEEN THE CONTRACT AND THIS DRAWING MATERIALS AND AMOUNTS OF MATERIALS TO BE SUPPLIED BY GENERAL ELECTRIC COMPANY T OF THE CONTRACT SHALL GOVERN

FOLDOUT FRAME

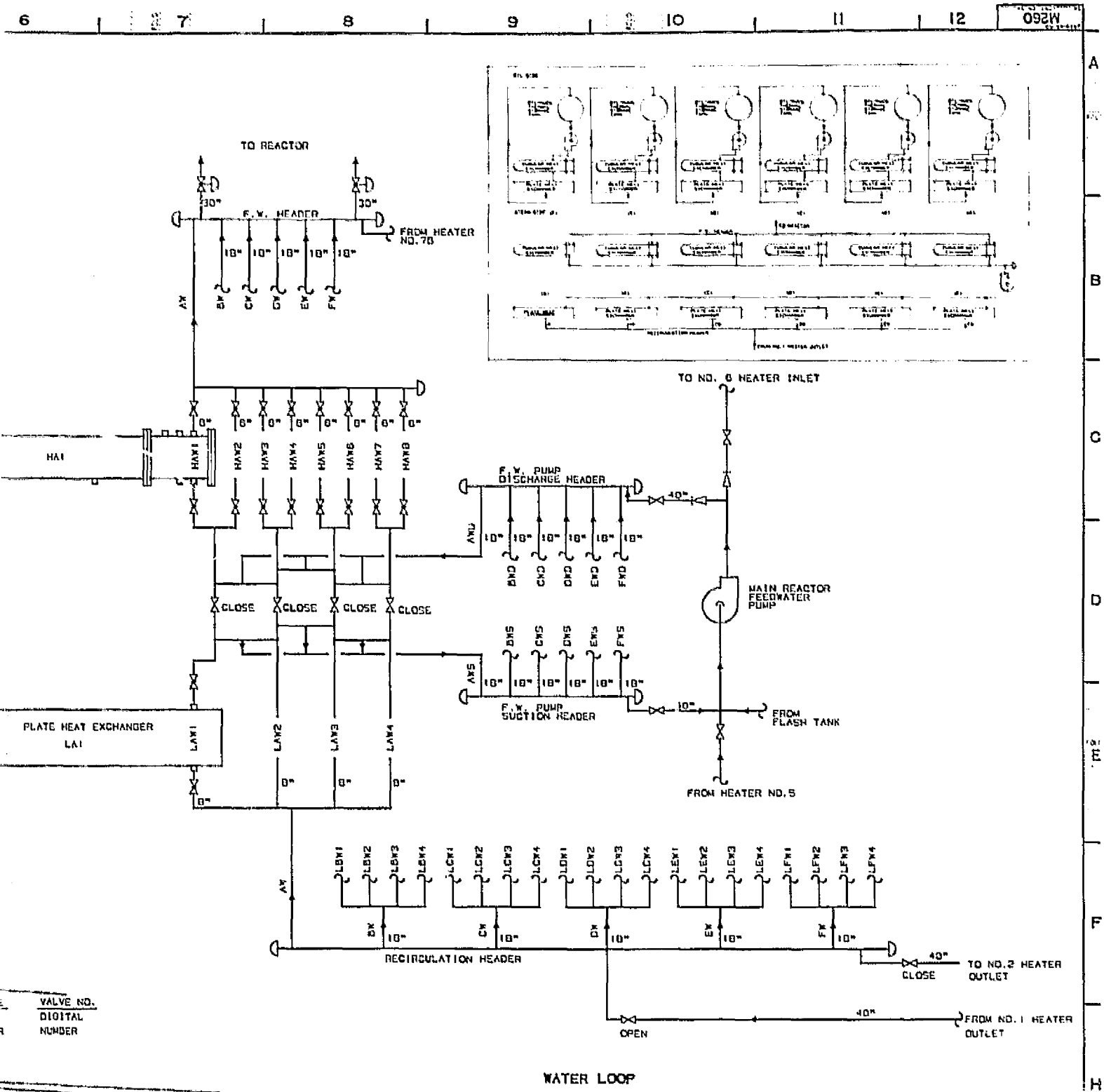

Figure 4-47. TES Plant #4, Thermal Storage System Flow Diagram - Discharging Operation

DISCHARGE OPERATION

NOTICE TO PURCHASER

STORAGE SYSTEM FLOW SYSTEM
1125MW BASE PWR PLANT
DUAL MEDIA THERMAL ENERGY STORAGE

GENERAL ELECTRIC
PROJECTS ENGINEERING OPERATION

DOE/EPRI

M260

FOLDOUT FRAME 2

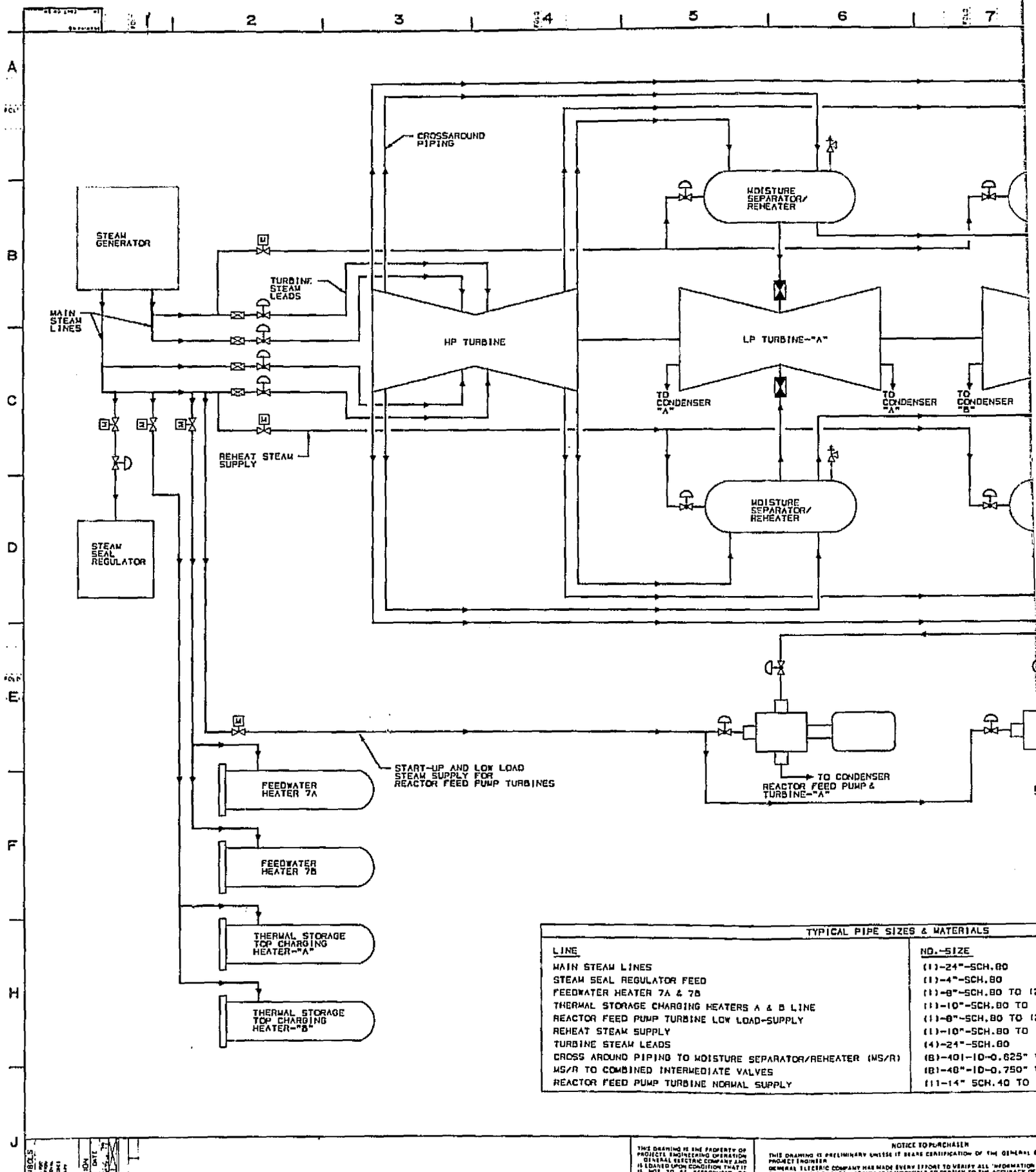

TYPICAL PIPE SIZES & MATERIALS

LINE	NO.-SIZE
MAIN STEAM LINES	(1)-24"-SCH.80
STEAM SEAL REGULATOR FEED	(1)-4"-SCH.80
FEEDWATER HEATER 7A & 7B	(1)-8"-SCH.80 TO
THERMAL STORAGE CHARGING HEATERS A & B LINE	(1)-10"-SCH.80 TO
REACTOR FEED PUMP TURBINE LOW LOAD-SUPPLY	(1)-8"-SCH.80 TO
REHEAT STEAM SUPPLY	(1)-10"-SCH.80 TO
TURBINE STEAM LEADS	(4)-24"-SCH.80
CROSS AROUND PIPING TO MOISTURE SEPARATOR/REHEATER (MS/R)	(8)-40I-ID-0.625"
MS/R TO COMBINED INTERMEDIATE VALVES	(8)-40"-ID-0.750"
REACTOR FEED PUMP TURBINE NORMAL SUPPLY	(1)-14" SCH.40 TO

REV SYMBOLS

REVISION | DATE

THIS DRAWING IS THE PROPERTY OF PROJECTS ENGINEERING OPERATION GENERAL ELECTRIC COMPANY AND IS LOANED UPON CONDITION THAT IT IS NOT TO BE REPRODUCED OR COPIED IN WHOLE OR IN PART OR USED FOR FURNISHING INFORMATION TO OTHERS OR FOR ANY OTHER PURPOSE WITHOUT PERMISSION OF PROJECTS ENGINEERING OPERATION

NOTICE TO PURCHASER

THIS DRAWING IS PRELIMINARY UNLESS IT BEARS CERTIFICATION OF THE GENERAL ELECTRIC PROJECT ENGINEER

GENERAL ELECTRIC COMPANY HAS MADE EVERY EFFORT TO VERIFY ALL INFORMATION THIS DRAWING HOWEVER BECAUSE IT IS IMPOSSIBLE TO CERTIFY TO THE ACCURACY OF FURNISHED BY OUTSIDE SOURCES GENERAL ELECTRIC COMPANY MUST DISCLAIM LIABILITY DAMAGE RESULTING FROM ANY INFORMATION INCORPORATED ON THIS DRAWING WHICH INFORMATION FURNISHED BY THE CUSTOMER OTHER EQUIPMENT MANUFACTURERS TRIBUTORS IN THE EVENT OF A CONFLICT BETWEEN THE CONTRACT AND THIS DRAWING MATERIALS AND AMOUNTS OF MATERIALS TO BE SUPPLIED BY GENERAL ELECTRIC COMPANY OF THE CONTRACT SHALL GOVERN

FOLDOUT FRAME

BLANK PAGE BLANK NOT FILMED

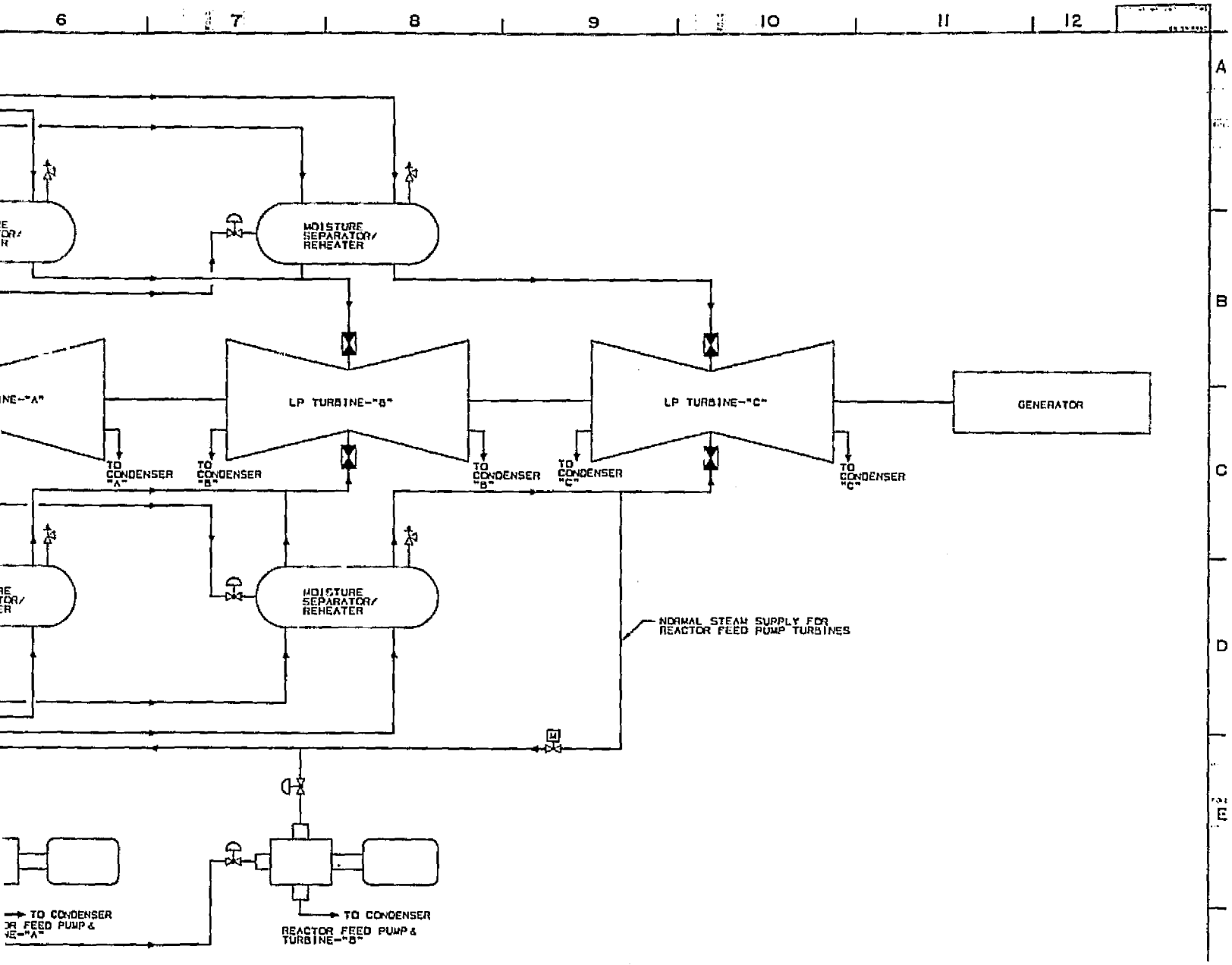

2 FOLDOUT FRAME

TYPICAL PIPE SIZES & MATERIALS

	NO.-SIZE	MATERIAL
	(1)-24"-SCH.80	INCONEL/CARBON STEEL
	(1)-4"-SCH.80	CARBON STEEL
	(1)-8"-SCH.80 TO (2)-6"-SCH.80	CARBON STEEL
NE	(1)-10"-SCH.80 TO (2)-8"-SCH.80	CARBON STEEL
	(1)-8"-SCH.80 TO (2)-6"-SCH.80	CARBON STEEL
	(1)-10"-SCH.80 TO (2)-8"-SCH.80	CARBON STEEL
	(4)-24"-SCH.80	CARBON STEEL
/REHEATER (MS/R)	(8)-40I-ID-0.825" WALL	NI-CR-CU ALLOY
	(8)-48"-ID-0.750" WALL	NI-CR-CU ALLOY
	(1)-14" SCH.40 TO (2)-10"-SCH.40	CARBON STEEL

LEGEND

- MOTOR OPERATED VALVE
- CONTROL VALVE
- TURBINE MAIN STOP VALVE
- COMBINED INTERMEDIATE VALVE
- RELIEF VALVE

Figure 4-48. TES Plant #4, Main Steam Flow Diagram

PLANT #4

NOTICE TO PURCHASER

NONE

MAIN STEAM FLOW DIAGRAM
1125 MW BASE POWER PLANT
DUAL MEDIA THERMAL ENERGY STORAGE

THERMAL ENERGY STORAGE

DOE/EPRI

GENERAL ELECTRIC
PROJECTS ENGINEERING OPERATION
INSTALLATION AND SERVICE ENGINEERING DIVISION
SCHENECTADY N.Y. USA

3N7113T

M273

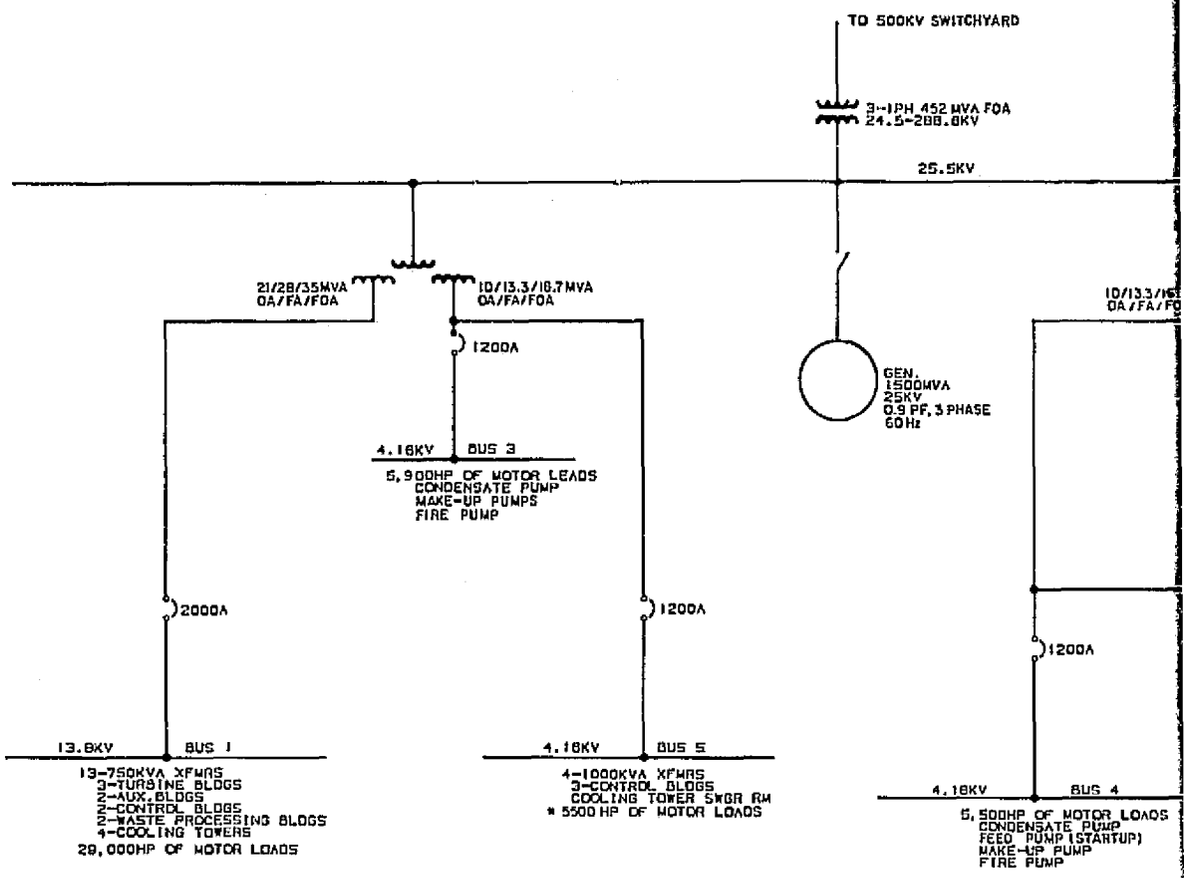

FOLDOUT FRAME 7

THIS DRAWING IS THE PROPERTY OF PROJECTS ENGINEERING OPERATION - GENERAL ELECTRIC COMPANY AND IS LOANED UPON CONDITION THAT IT IS NOT TO BE REPRODUCED OR COPIED IN WHOLE OR IN PART OR USED FOR FURNISHING INFORMATION TO OTHERS OR FOR ANY OTHER PURPOSE WITHOUT PERMISSION OF PROJECTS ENGINEERING OPERATION

NOTICE TO PURCHASER

THIS DRAWING IS PRELIMINARY UNLESS IT BEARS CERTIFICATION OF THE GE PROJECT ENGINEER

GENERAL ELECTRIC COMPANY HAS MADE EVERY EFFORT TO VERIFY ALL INFORMATION ON THIS DRAWING HOWEVER, BECAUSE IT IS IMPOSSIBLE TO CERTIFY TO THE ACCURACY OF INFORMATION FURNISHED BY OUTSIDE SOURCES GENERAL ELECTRIC COMPANY MUST DISCLAIM ANY DAMAGE RESULTING FROM ANY INFORMATION INCORPORATED ON THIS DRAWING FROM INFORMATION FURNISHED BY THE CUSTOMER OTHER EQUIPMENT MANUFACTURERS OR THE EVENT OF A CONFLICT BETWEEN THE CONTRACT AND THIS DRAWING MATERIALS AND AMOUNTS OF MATERIALS TO BE SUPPLIED BY GENERAL ELECTRIC SHALL GOVERN OF THE CONTRACT SHALL GOVERN

PRECEDING PAGE BLANK NOT FILMED

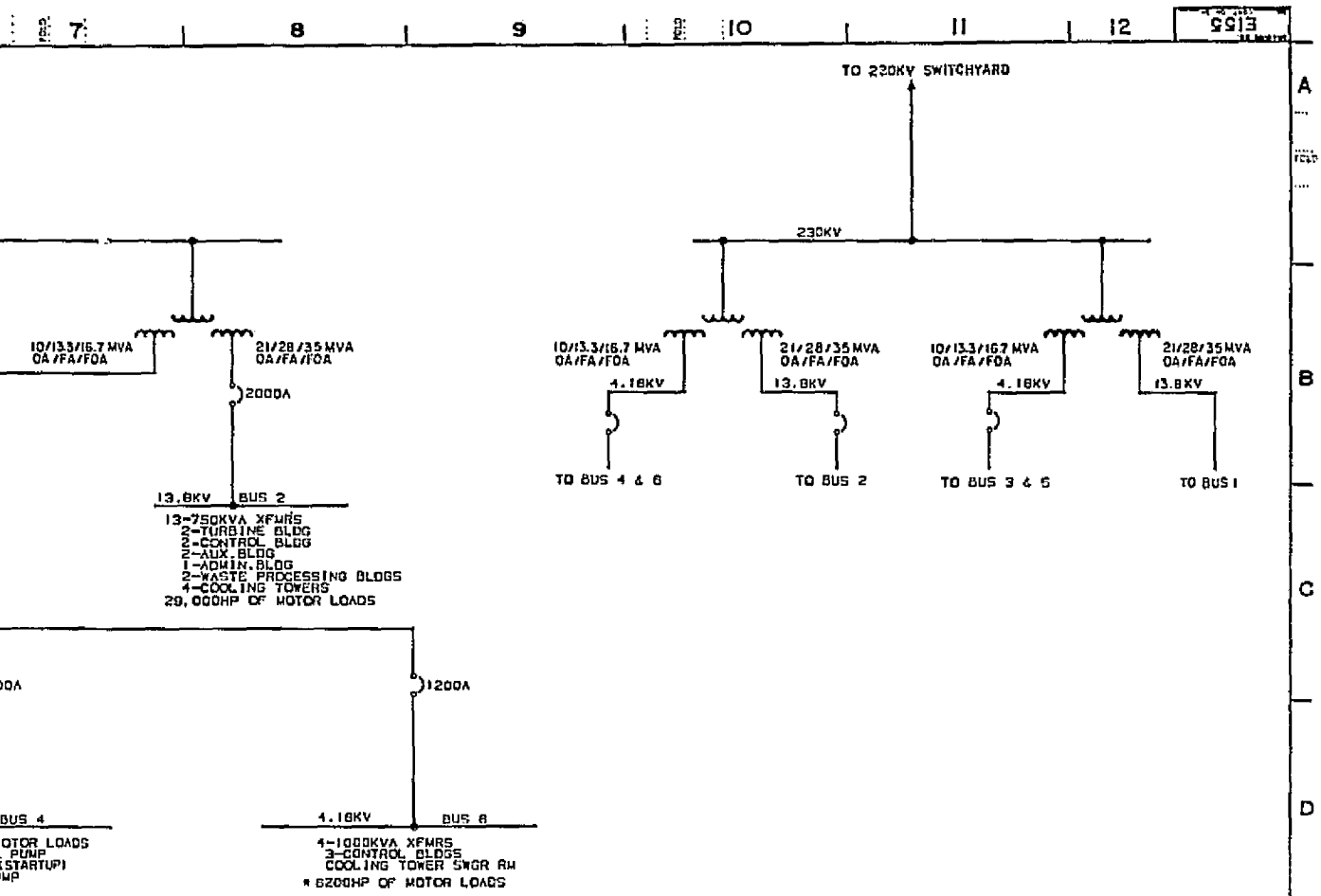

FOLDOUT FRAME

* INCLUDES 1000HP FOR TES AUXILIARIES

Figure 4-49. TES Plant #4, One Line Electrical Diagram

GJB/CAD	NONE	ELECTRICAL ONE-LINE DIAGRAM 1125 MW BASE PWR PLANT DUAL MEDIA STORAGE	GENERAL ELECTRIC PROJECTS ENGINEERING OPERATION
		THERMAL ENERGY STORAGE	
		DOE/EPRI	E155 — 0

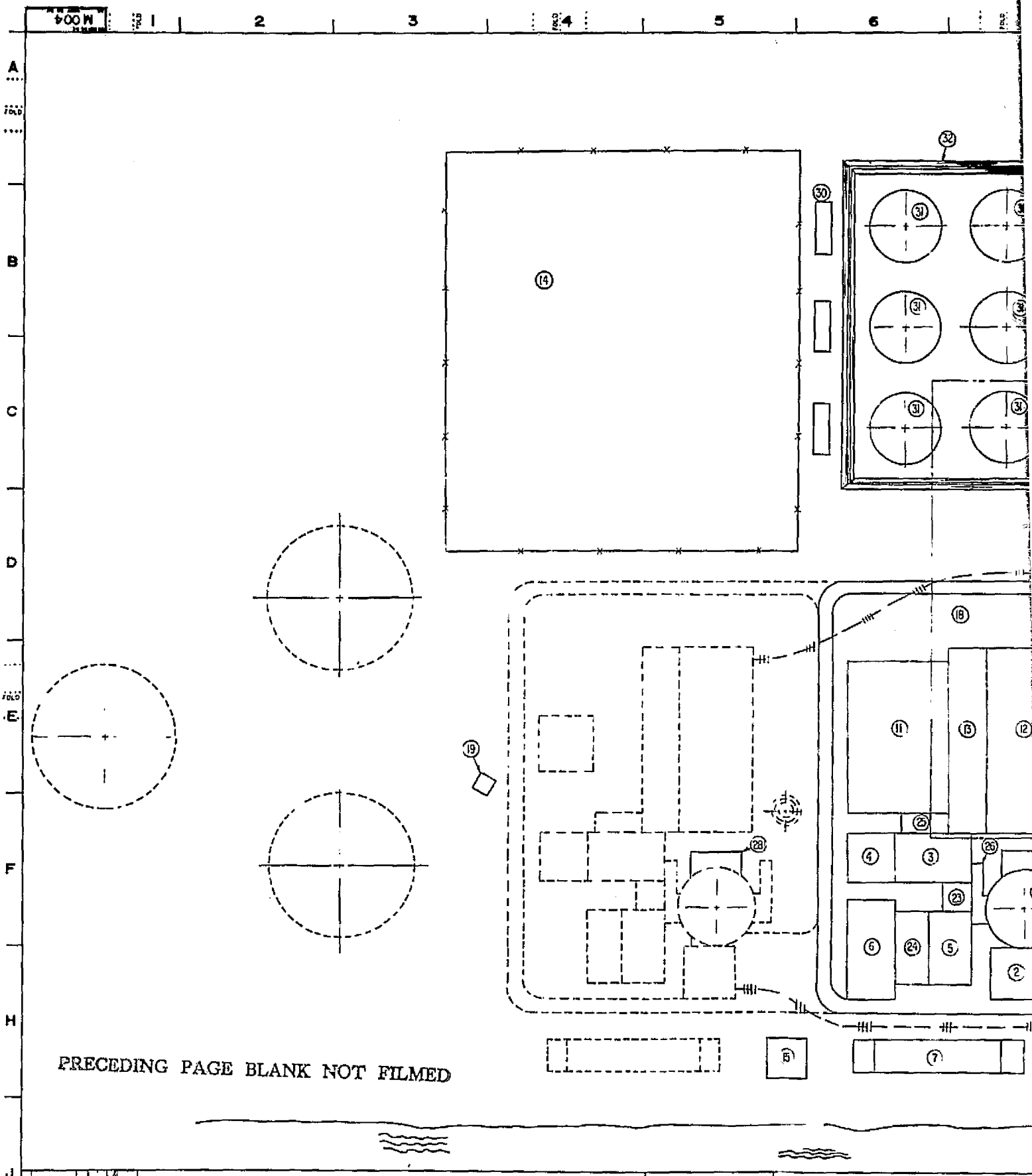

PRECEDING PAGE BLANK NOT FILMED

REV SYMBOLS

REVISION		
NO	SYM	DATE
0	P	2-4-7

THIS DRAWING IS THE PROPERTY OF PROJECTS ENGINEERING OPERATION GENERAL ELECTRIC COMPANY AND IS LOANED UPON CONDITION THAT IT IS NOT TO BE REPRODUCED OR COPIED IN WHOLE OR IN PART OR USED FOR FURNISHING INFORMATION TO OTHERS OR FOR ANY OTHER PURPOSE WITHOUT PERMISSION OF PROJECTS ENGINEERING OPERATION

NOTICE TO PURCHASER

THIS DRAWING IS PRELIMINARY UNLESS IT BEARS CERTIFICATION OF THE G
PROJECT ENGINEER
GENERAL ELECTRIC COMPANY HAS MADE EVERY EFFORT TO VERIFY ALL INFO
THIS DRAWING HOWEVER BECAUSE IT IS IMPOSSIBLE TO CERTIFY TO THE ACCU
FURNISHED BY OUTSIDE SOURCES, GENERAL ELECTRIC COMPANY MAKES DISCLAI
DAMAGE RESULTING FROM ANY INFORMATION INCORPORATED ON THE DRAWI
INFORMATION FURNISHED BY THE CUSTOMER OTHER EQUIPMENT MANUF
TRIBUTORS. IN THE EVENT OF A CONFLICT BETWEEN THE CONTRACT AND
MATERIALS AND AMOUNTS OF MATERIALS TO BE SUPPLIED BY GENERAL ELECTRI
OF THE CONTRACT SHALL GOVERN

FOLDOUT FRAME 1

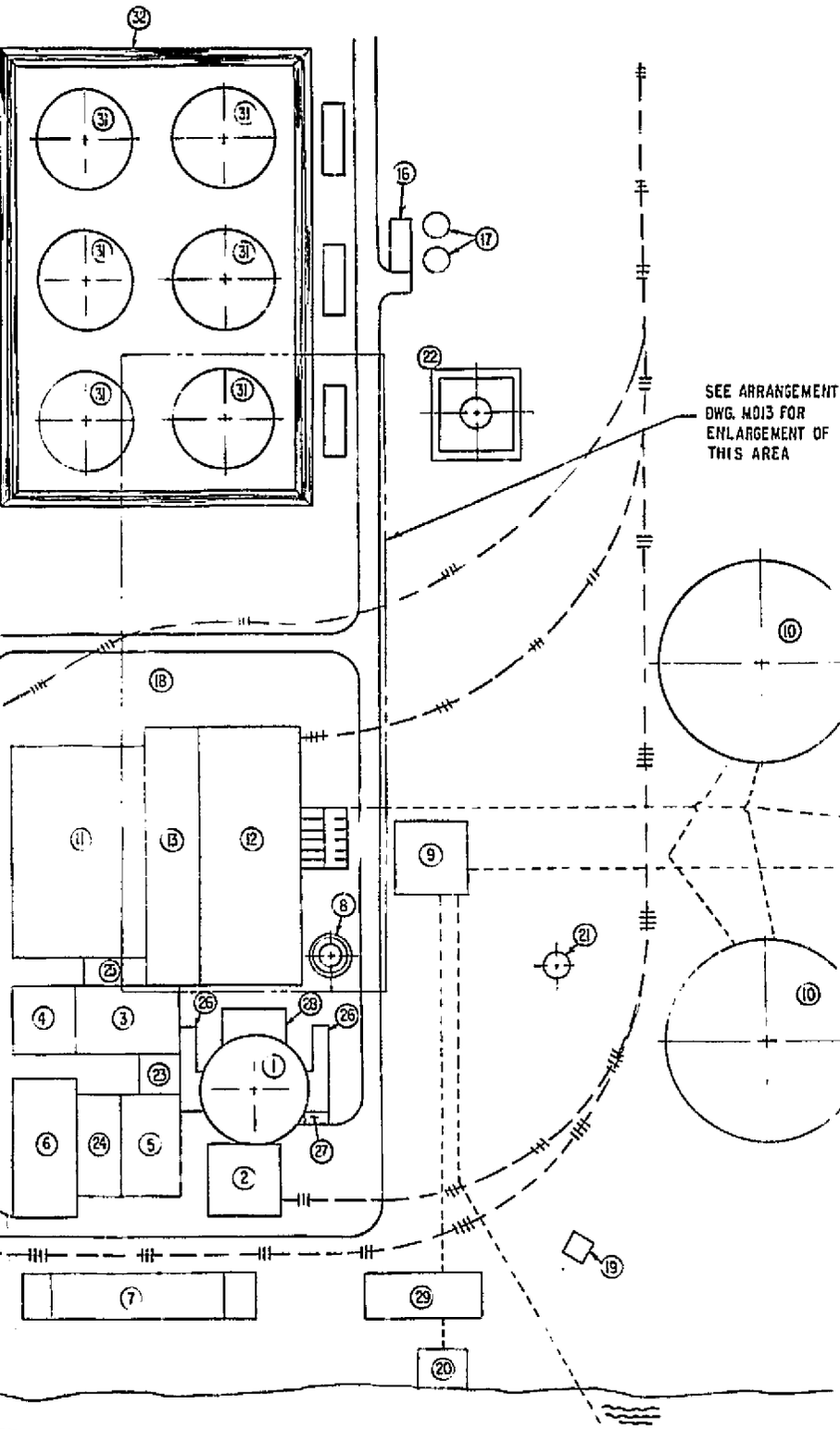

PLANT NOMENCLATURE

1. REACTOR CONTAINMENT BUILDING
2. FUEL STORAGE BUILDING
3. CONTROL & ESSENTIAL SWITCHGEAR BUILDING
4. DIESEL GENERATOR & FUEL OIL STORAGE BUILDING
5. PRIMARY AUXILIARY BUILDING
6. WASTE PROCESS BUILDING
7. ULTIMATE HEAT SINK COOLING TOWER STRUCTURE
8. CONDENSATE STORAGE TANK
9. CIRCULATING WATER & SERVICE WATER PUMP HOUSE
10. MAIN COOLING TOWERS
11. SERVICE & ADMISTRATION BUILDING
12. TURBINE BUILDING
13. TURBINE HEATER BAY
14. SWITCHYARD
15. HOLDING POND PLANT EFFLUENT
16. FIRE PUMP HOUSE
17. FIRE WATER STORAGE TANKS
18. TRANSFORMER YARD
19. CONTROL ROOM EMERGENCY AIR INTAKE STRUCTURES
20. MAKE-UP WATER INTAKE STRUCTURE
21. DEMINERALIZED WATER STORAGE TANK
22. FUEL OIL STORAGE TANK
23. EQUIPMENT VAULT
24. TANK FARM
25. NONESSENTIAL SWITCHYARD BUILDING
26. MAIN STEAM & FEEDWATER PIPE ENCLOSURES
27. HYDROGEN RECOMBINER BUILDING
28. EMERGENCY FEEDWATER PUMP HOUSE & ELECTRICAL PENETRATION AREA
29. MAKE-UP WATER PRETREATMENT BUILDING
30. HEATERS
31. OIL/ROCK TANKS
32. CONTAINMENT DIKE

NOTE:
PLOT PLAN IS BASED ON DRAWINGS PREPARED FOR THE U.S. NUCLEAR REGULATORY COMMISSION UNDER CONTRACT NO. AT (49-24)-0531 AND THE U.S. DEPARTMENT OF ENERGY UNDER CONTRACT NO. EY-76-C-02-2477 BY UNITED ENGINEERS & CONSTRUCTORS INC.

0 1 2 3 4
SCALE 1" = 100'

Figure 4-50. TES Plant #4, Plot Plan

PRELIMINARY

PLOT PLAN - PLANT NO. 4
1.3GWh NUCLEAR
WITH OIL/ROCK TANK

THERMAL ENERGY STORAGE

DOE EPRI

GENERAL ELECTRIC
PROJECTS ENGINEERING OPERATION

M004

NOTICE TO PURCHASER
IS PRELIMINARY UNLESS IT BEARS CERTIFICATION OF THE GENERAL ELECTRIC COMPANY ER.
RIC COMPANY HAS MADE EVERY EFFORT TO VERIFY ALL INFORMATION INCORPORATED ON HOWEVER BECAUSE IT IS IMPOSSIBLE TO CERTIFY TO THE ACCURACY OF ALL INFORMATION OUTS OR SOURCES GENERAL ELECTRIC COMPANY MUST DISCLAIM LIABILITY FOR ALL LOSS OR ING FROM ANY INFORMATION INCORPORATED ON THIS DRAWING WHICH IS SUPPLIED FROM FURNISHED BY THE CUSTOMER, OTHER EQUIPMENT MANUFACTURERS OR OTHER CON THE EVENT OF A CONFLICT BETWEEN THE CONTRACT AND THIS DRAWING RESPECTING AMOUNTS OF MATERIAL EVER SUPPLIED BY GENERAL ELECTRIC COMPANY THE PROVISIONS CT SHALL GOVERN

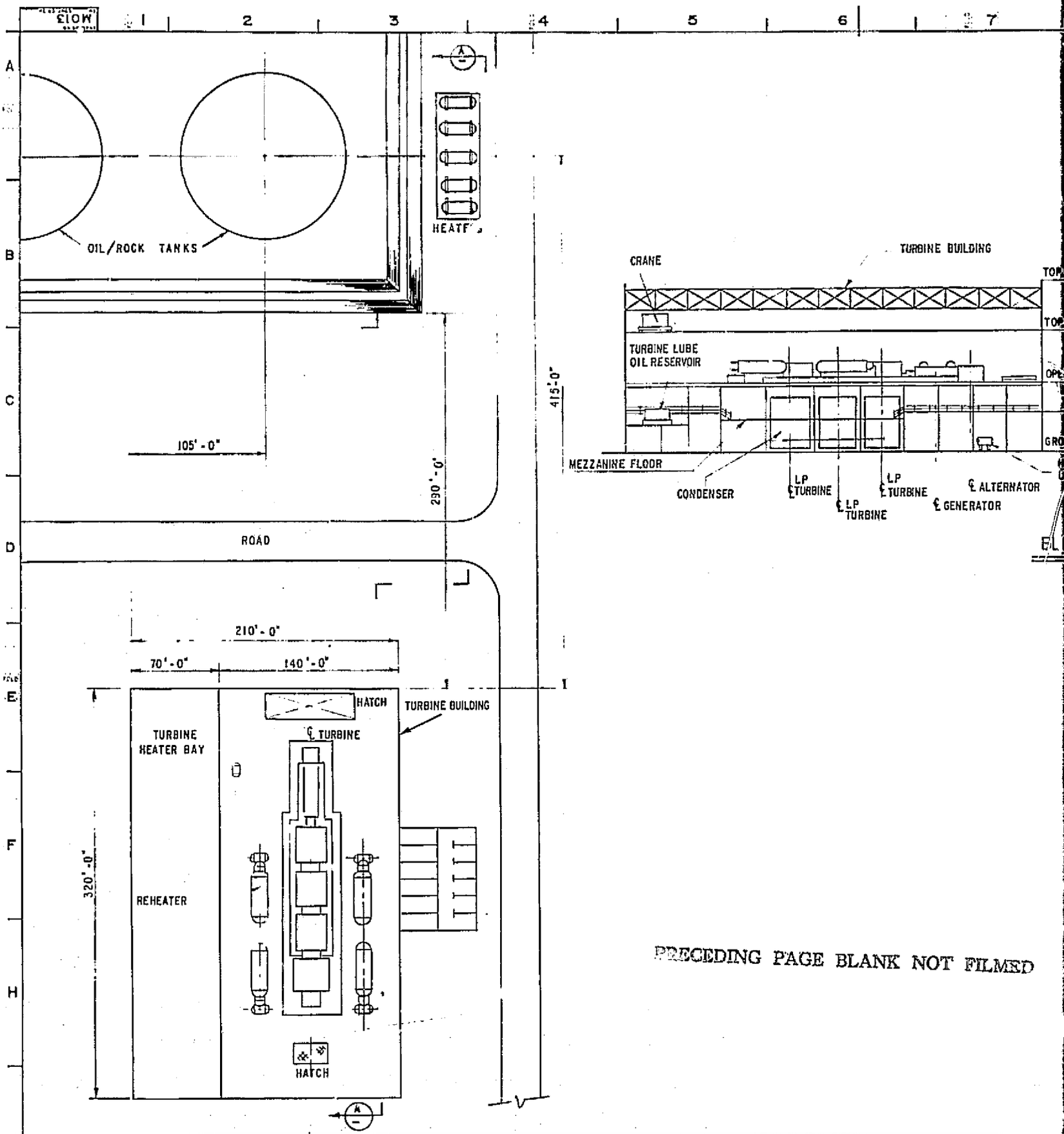

PRECEDING PAGE BLANK NOT FILMED

FOLDOUT FRAME

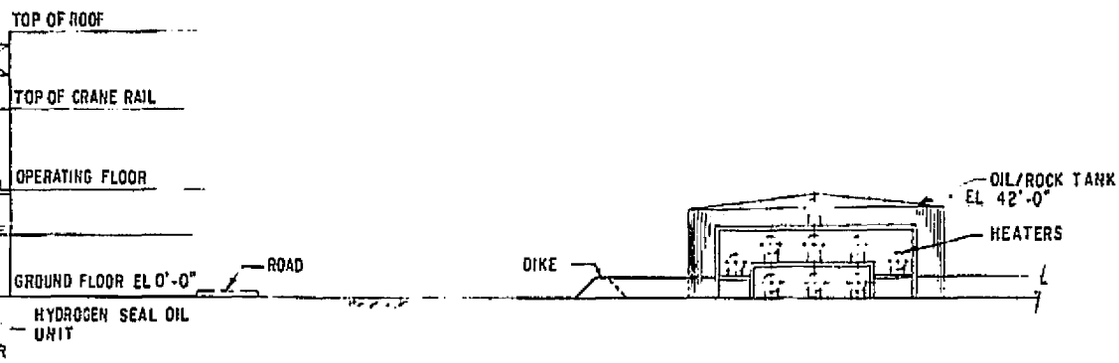

ELEVATION A-A

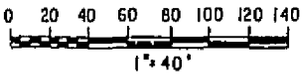

NOTE FOR PLOT PLAN SEE M004

Figure 4-51. TES Plant #4, Equipment Arrangement

PRELIMINARY

ARRANGEMENT/PLANT NO 4
1138MW NUCLEAR
WITH OIL/ROCK TANKS

THERMAL ENERGY STORAGE

DOE/EPRI

GENERAL ELECTRIC
PROJECTS ENGINEERING OPERATION

3N7113T

M013

0

FOLDOUT FRAME 2

a limited ratio of peak to minimum power and has no separate peaking steam turbine. The percentage swing is -20.58% during charging operation and +12.16% during discharging operation. The TES turnaround efficiency is 0.46 based on gross power out and 0.43 based on net power output.

The plant conceptual design drawings are illustrated in Figures 4-43 through 4-45 for heat and mass balance diagrams during base cycle, charging cycle and discharging cycle respectively; Figures 4-46 and 4-47 for TES system flow diagrams for charging and discharging operation; Figure 4-48 for main steam flow diagram; Figure 4-49 for electrical one line diagram and Figures 4-50 and 4-51 for plot plan and equipment arrangement.

A simplified version of TES schematic during a charging mode and discharging mode is shown in Figure 4-52.

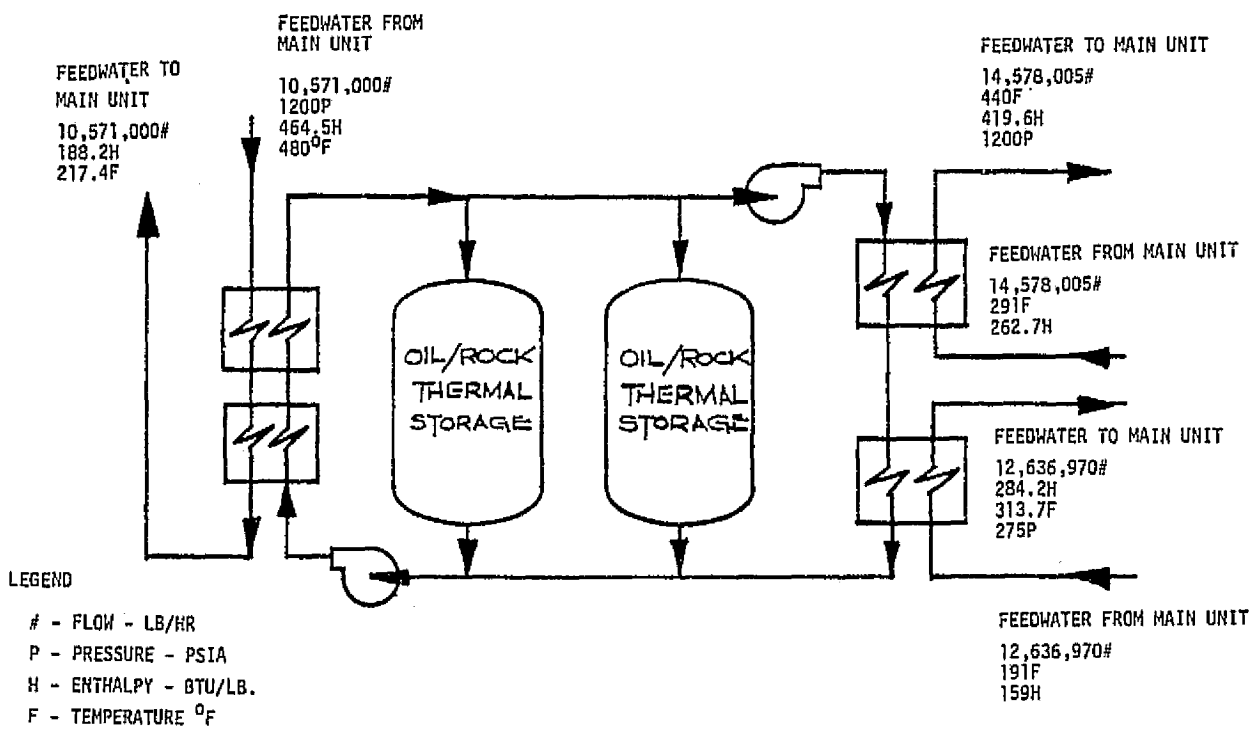

Figure 4-52. Oil/Rock Thermal Storage for Feedwater Heating in Plant #4

PRECEDING PAGE BLANK NOT FILMED

The figure shows that during a charging period of 8 hours duration hot feedwater from the LWR steam generator inlet heats the oil/rock system. These heat exchangers are both shell and tube type and plate type. The feedwater flows through the tube side and transfers heat to the Caloria HT-43 oil which is on the shell side. The feedwater flow rate during charging is 4.80×10^6 kg/hr (10.57×10^6 lb/hr) at 8.27 MPa (1200 psia) and 248.9°C (480°F) at inlet. The cooled feedwater after losing heat to the oil on the shell side is returned to the main unit feedwater heater #2. Caloria HT-43 oil is pumped from oil/rock storage tanks into the shell side of the heat exchanger and then discharged to the top of the storage tanks.

During a discharging period of 6 hours duration the main heater #1 is used to heat the low pressure feedwater from 88.3°C (191°F) to 156.5°C (313.7°F). The low pressure feedwater flow rate is 5.73×10^6 kg/hr (12.64×10^6 lb/hr) at 1.90 MPa (275 psia) exit. This low pressure feedwater mixes with the main stream feedwater. The main stream feedwater is then pressurized and passed to the high pressure shell and tube type heat exchangers to heat this water from 143.9°C (291°F) to 226.7°C (440°F). The high pressure feedwater flow rate is 6.61×10^6 kg/hr (14.58×10^6 lb/hr). Heat to the feedwater during discharging operation is continuously supplied by the circulating hot oil from the oil/rock storage tanks.

The oil/rock storage tanks in Plant #4 are similar in design, use the same fluid (Caloria HT-43 oil), and operate similarly to those in Plant #1 (see page 4-40).

To reduce the number of heat exchangers, the same heat exchangers which are used during the charging period are also used during the discharging period.

The TES system component descriptions are given in Table 4-15.

Table 4-15

TES COMPONENT DESCRIPTIONS FOR PLANT #4 WITH ABOVEGROUND OIL/ROCK STORAGE FOR FEEDWATER HEATING

Component	Description
Thermal Storage Tank	Six identical tank units, cylindrical tank, axis vertical, installed aboveground, 36,576 m (120 ft) diameter by 12.2 m (40 ft) high, 12812 m^3 (4.52×10^5 ft^3), each containing 3.4×10^7 kg (3.74×10^4 tons) of RB gravel rock, and 3.2×10^6 liters (0.85×10^6 gal) of Caloria HT-43 oil.
Ullage Maintenance Unit	Storage and control of ullage gas with compressed gas storage at 120 Mpa (175 psia); tank pressure control, venting, inert gas (nitrogen) control, volatile vapor recovery and control.
Oil Maintenance Unit	Full-Flow, continuous filtration with dual 80-mesh filters in main oil line upstream of pump; periodic distillation with vacuum distillation unit in side stream to remove polymerized materials; periodic oil makeup.
H.P. Heater	Forty-eight identical tubular heat exchanger units divide into six groups (8 units for a group); each unit has 2883 m^2 (31,000 ft^2) heating surface; water on tube side and oil on shell side.
L.P. Heater	Twenty-four identical plate heat exchanger units divide into six groups (6 units for a group); each unit has 2364 m^2 (25450 ft^2)
Oil Pump	Six identical pumps; centrifugal, high temperature with 1262 liters/sec. (20,000 gal/min capacity and 70.15 m (230.6 ft) TDH (water column). BHP: 1200 HP.
Control Valve	36": CV01 30": CVS1, CVS2
Piping	40" STD WT CARBON STEEL 200 ft 36" STD WT CARBON STEEL 2000 ft 30" STD WT CARBON STEEL 100 ft 18" STD WT CARBON STEEL 700 ft 12" STD WT CARBON STEEL 300 ft 10" STD WT CARBON STEEL 300 ft 8" STD WT CARBON STEEL 300 ft 6" SCH 40 CARBON STEEL 200 ft.

The detailed TES process flow diagrams, Figures 4-46 and 4-47, show the six oil/water loops with associated feedwater piping, oil/rock storage tanks, heat exchangers, pumps and valves. The plant arrangement drawings as shown in Figures 4-42, 4-50, and 4-51 are based on drawings as documented in NUREG-0241, Volumes 1 and 2, Reference 4-3. These figures indicate the modifications made such as incorporation of oil/rock storage tanks, heat exchangers, pumps, etc. Figure 4-49 shows the electrical one line diagram of this plant with a different rating of the generator than the reference LWR base plant generator rating as shown in Figure 4-41.

POWER PLANTS ECONOMIC ANALYSIS

This section describes the plant capital cost estimates, plant capital cost estimate comparisons, total capital cost of energy storage systems, levelized annual energy storage cost, and levelized busbar energy storage cost for all of the above power plants.

Plant Capital Cost Estimates

The groundrules used in estimating plant direct costs and plant base costs (sum of direct and indirect costs) are listed below. Those items that are excluded from the direct and base costs are added later to give TOTAL investment cost.

- The cost data is based on prices effective July 1976.
- Escalation and interest during construction is not included in the cost estimate.
- No tax preferences are included.
- Main heat rejection system is to have mechanical draft wet cooling towers.
- Connections to the utility grid are at two different voltage levels; 500 kV for the generator, 230 kV for the auxiliary transformers.
- The cost estimate is to be developed for a single unit, with sufficient land area to accommodate an identical second unit.

- Owner's costs, including consultants, site selection fees are excluded.
- Fees and permits - Federal, state, local costs are excluded.
- Spare parts costs are excluded.
- Contingency costs are excluded.
- Main transformer, switchyard and transmission facility costs are excluded.
- Waste disposal costs are excluded.

Following are additional groundrules applicable to each of the two type plants.

HSC Plants

- Environmental and siting criteria CIRCA, January 1, 1976 is to be used.
- Coal handling system is designed to unload a 100 car coal unit train in five hours.
- Indoor coal storage silos capacity designed for 8 hours consumption at full load.
- Outdoor coal storage capacity designed for sixty days consumption at full load.
- A lime scrubber system for removal of SO_2 gas from the flue gas.
- Initial coal supply costs are excluded.

Nuclear LWR Plants

- Licensing and design criteria CIRCA, January 1, 1976 is to be used.
- The plant is to have an on-site nuclear reactor core storage capacity for 4/3 core.
- Nuclear liability and other insurance costs are excluded.
- Initial fuel loading costs are excluded.

The code of accounts for HSC and nuclear LWR plants are to be in accordance with USAEC Report NUS-531. The breakdown of code of accounts are as follows:

Account Number		Description
20		Land and Land Rights
21		Structures and Improvements
	211	Yardwork
	212	Steam Generator Building/Reactor Containment Building
	213	Turbine Building
	218B	Administration and Service Building
	218I	Electrical Switchgear Building
	218M	Coal Car Thawing Shed
	218N	Rotary Car Dumping Building
	218O	Coal Breaker House
	218P	Coal Crusher House
	218U	Material Handling Building
	218V	Waste Water Treatment
	219	Stack Structure
22		Boiler Plant Equipment/Reactor Plant Equipment
	221	Steam Generating System/Reactor Equipment
	222	Draft System/Heat Transfer System
	223	Ash and Dust Handling System/Safeguards System
	224	Fuel Handling System/Rad Waste Processing
	226	Fuel Gas Desulfurization/Inert Gas Systems
	227	Instrumentation and Controls
23		Turbine Plant Equipment
	231	Turbine-Generators
	233	Condensing Systems
	234	Feed Heating Systems
	235	Miscellaneous Equipment
	236	Instrumentation and Controls
24		Electric Plant Equipment
	241	Switchgear
	242	Station Service Equipment
	243	Switchboards
	244	Protective Equipment
	245	Electrical Structure and Wiring Control
	246	Power and Control Wiring

Account Number		Description
25		Miscellaneous Plant Equipment
	251	Transportation and Lift Service
	252	Air, Water and Steam Service
	253	Communications Equipment
	254	Furnishing and Fixtures
	255	Waste Water Treatment Equipment
26		Main Condensate Heat Rejection Systems
	261	Structures
	262	Mechanical Equipment
27		Thermal Storage Equipment
	271	Heat Exchangers
	272	Piping and Valves
	273	Rotating Equipment
	274	Inerting Systems
	275	Storage Vessels
	276	Instrumentation and Controls
28		Thermal Storage Media
	281	Oil/Heat Transfer Fluid
	282	Rocks
	Total Direct Costs = Σ 20 - 28 Accounts	
91		Construction Services
	911	Temporary Construction Facility
	912	Construction Tools and Equipment
	913	Payroll Insurance and Taxes
	914	Permits, Insurance and Local Taxes
	915	Transportation
92		Home Office Engineering and Services
	921	Home Office Services
	922	Home Office G/A
	923	Home Office Construction Management
93		Field Office Engineering and Services
	931	Field Office Expenses
	932	Field Job Supervision
	933	Field QA/QC
	934	Plant Startup and Test
	Total Indirect Costs = Σ 91 - 93	

Cost estimates were prepared for fifteen plants. Tables 4-16 through 4-30 (listed for ready reference in the List of Tables at the front of this report) describe these direct and base costs (direct plus indirect) with the cost breakdown for each two digit account number.

Total direct cost of the plant includes equipment cost, labor cost, and material cost.

Plant cost numbers as given in Tables 4-16 and 4-17 are for reheat steam cycles HSC base plants with power output capacities of 794,415 kW net and 741,000 kW net, respectively. Tables 4-21, 4-24, 4-25, and 4-26 give the costs for TES plants #1A, 2, 3, and 4A. The TES HSC plants #1B, 1C, 4B and 4C costs as given in Tables 4-22, 4-23, 4-27, and 4-28 are for sensitivity analysis study purposes only. Tables 4-29 and 4-30 give the cost numbers for the cycling coal fired plants with reheat for two steam conditions 12.41 MPa/510°C/510°C (1800 psig/950°F/950°F) and 16.55 MPa/538°C/538°C (2400 psig/1000°F/1000°F).

TOTAL Investment Cost of the Plants

In the above paragraphs the base costs which are sums of total direct and indirect costs were estimated for the fifteen plants. the TOTAL investment cost of the plant is a sum of the base cost + owner's costs for consultants, site selection, etc. + fees, permits, state and local taxes + spare parts + interest during construction + contingency allowance. These latter costs were excluded from the above accounts. The same multipliers as discussed in Section 3 were used with plant base costs to obtain plant TOTAL investment costs. These multipliers were used to make the $/kW cost numbers consistent with the Electric Power Research Institute (EPRI), Technical Assessment Guide (TAG), Reference 4-7. The equations are:

HSC Plant TOTAL Investment Cost = 1.772 Base Cost for HSC Plant

Nuclear LWR Plant TOTAL Investment Cost = 1.572 Base Cost for LWR Plant.

Table 4-16

BASE COSTS
NUREG 0244, HSC PLANT - 794,415 kW NET

ACCOUNT NUMBER	ITEM AND DESCRIPTION	TOTAL COST (IN THOUSANDS) EQUIPMENT	LABOR	MATERIAL	TOTAL
20	Land and Land Rights	0	0	2000	2000
21	Structures and Improvements	2085	14065	21865	38015
22	Boiler/Reactor Equipment	75729	32450	11967	120146
23	Turbine Plant Equipment	49109	12605	3268	65182
24	Electric Plant Equipment	7547	13253	8132	28932
25	Misc. Plant Equipment	5189	2843	705	8737
26	Main Cond. Heat Rej. Sys.	8596	2564	881	12041
27	Thermal Storage Equipment	0	0	0	0
28	Thermal Storage Media	0	0	0	0
	TOTAL DIRECT	148255	77980	48818	275053
91	Construction Services				35215
92	Home Office Engr. Service				14349
93	Field Office Engr. Service				16026
	TOTAL BASE (DIRECT PLUS INDIRECT)				335243

Table 4-17

BASE COSTS
NUREG MODIFIED, HSC PLANT - 741,000 kW NET

ACCOUNT NUMBER	ITEM AND DESCRIPTION	TOTAL COST (IN THOUSANDS) EQUIPMENT	LABOR	MATERIAL	TOTAL
20	Land and Land Rights	0	0	2000	2000
21	Structures and Improvements	2018	13610	21159	36787
22	Boiler/Reactor Equipment	72683	31145	11487	115315
23	Turbine Plant Equipment	47005	12257	3128	62390
24	Electric Plant Equipment	7224	12685	7784	27693
25	Misc. Plant Equipment	4981	2728	677	8386
26	Main Cond. Heat Rej. Sys.	8228	2454	843	11525
27	Thermal Storage Equipment	0	0	0	0
28	Thermal Storage Media	0	0	0	0
	TOTAL DIRECT				264096
91	Construction Services				33812
92	Home Office Engr. Service				13777
93	Field Office Engr. Service				10203
	TOTAL BASE (DIRECT PLUS INDIRECT)				321888

Table 4-18

BASE COSTS
NONREHEAT HSC BASE PLANT - 741,633 kW NET

ACCOUNT NUMBER	ITEM AND DESCRIPTION	TOTAL COST (IN THOUSANDS) EQUIPMENT	LABOR	MATERIAL	TOTAL
20	Land and Land Rights	0	0	2000	2000
21	Structures and Improvements	2205	15294	23916	41415
22	Boiler/Reactor Equipment	73336	31344	11580	116260
23	Turbine Plant Equipment	75191	14405	4440	94036
24	Electric Plant Equipment	7547	13253	8132	28932
25	Misc. Plant Equipment	5189	2843	705	8737
26	Main Cond. Heat Rej. Sys.	8596	2564	325	11485
27	Thermal Storage Equipment	0	0	0	0
28	Thermal Storage Media	0	0	0	0
	TOTAL DIRECT	172064	79703	51098	302865
91	Construction Services				35892
92	Home Office Engr. Service				15752
93	Field Office Engr. Service				11641
	TOTAL BASE (DIRECT PLUS INDIRECT)				366150

Table 4-19

BASE COSTS
NUREG 0241 NUCLEAR LWR PLANT - 1,138,610 kW NET

ACCOUNT NUMBER	ITEM AND DESCRIPTION	TOTAL COST (IN THOUSANDS) EQUIPMENT	LABOR	MATERIAL	TOTAL
20	Land and Land Rights	0	0	2000	2000
21	Structures and Improvements	5902	55697	39777	101376
22	Boiler/Reactor Equipment	96569	27769	9143	133481
23	Turbine Plant Equipment	82630	23336	5315	111281
24	Electric Plant Equipment	13094	17793	8541	39428
25	Misc. Plant Equipment	7197	3959	647	11803
26	Main Cond. Heat Rej. Sys.	15703	4585	1300	21588
27	Thermal Storage Equipment	0	0	0	0
28	Thermal Storage Media	0	0	0	0
	TOTAL DIRECT	221095	133139	66723	420957
91	Construction Services				70033
92	Home Office Engr. Service				49219
93	Field Office Engr. Service				28620
	TOTAL BASE (DIRECT PLUS INDIRECT)				568829

Table 4-20

BASE COSTS
NUCLEAR LWR BASE PLANT - 1,072,573 kW NET

ACCOUNT NUMBER	ITEM AND DESCRIPTION	TOTAL COST (IN THOUSANDS) EQUIPMENT	LABOR	MATERIAL	TOTAL
20	Land and Land Rights	0	0	2000	2000
21	Structures and Improvements	5630	53139	37950	96719
22	Boiler/Reactor Equipment	93224	26807	8826	128857
23	Turbine Plant Equipment	78835	22264	5071	106170
24	Electric Plant Equipment	12640	17177	8245	38062
25	Misc. Plant Equipment	7071	3890	636	11597
26	Main Cond. Heat Rej. Sys.	14982	4374	1240	20596
27	Thermal Storage Equipment	0	0	0	0
28	Thermal Storage Media	0	0	0	0
	TOTAL DIRECT	212382	127651	63968	404001
91	Construction Services				67146
92	Home Office Engr. Service				47230
93	Field Office Engr. Service				27464
	TOTAL BASE (DIRECT PLUS INDIRECT)				545841

Table 4-21

BASE COSTS
TES HSC PLANT #1A WITH ABOVEGROUND OIL/ROCK GRAVEL, TRICKLE CHARGE THERMAL STORAGE - 1,125,332 kW NET

ACCOUNT NUMBER	ITEM AND DESCRIPTION	TOTAL COST (IN THOUSANDS) EQUIPMENT	LABOR	MATERIAL	TOTAL
20	Land and Land Rights	0	0	2000	2000
21	Structures and Improvements	2197	15486	24329	42012
22	Boiler/Reactor Equipment	73336	31344	11580	116260
23	Turbine Plant Equipment	115059	19082	5721	139862
24	ElectricPlant Equipment	10391	13812	8306	32509
25	Misc. Plant Equipment	5600	3068	761	9429
26	Main Cond. Heat Rej. Sys.	11755	3506	1206	16467
27	Thermal Storage Equipment	22960	6522	690	30172
28	Thermal Storage Media	15580	631	0	16211
	TOTAL DIRECT				404919
91	Construction Services				42430
92	Home Office Engr. Service				20690
93	Field Office Engr. Service				16094
	TOTAL BASE (DIRECT PLUS INDIRECT)				484133

Table 4-22

BASE COSTS
TES HSC PLANT #1B WITH ABOVEGROUND OIL/ROCK GRAVEL,
DUAL MEDIA THERMAL STORAGE - 1,125,332, kW NET

ACCOUNT NUMBER	ITEM AND DESCRIPTION	TOTAL COST (IN THOUSANDS) EQUIPMENT	LABOR	MATERIAL	TOTAL
20	Land and Land Rights	0	0	2000	2000
21	Structures and Improvements	2197	15486	24329	42012
22	Boiler/Reactor Equipment	73336	31344	11580	116260
23	Turbine Plant Equipment	115059	19082	5721	139862
24	Electric Plant Equipment	10391	13812	8306	32509
25	Misc. Plant Equipment	5600	3068	761	9429
26	Main Cond. Heat Rej. Sys.	11755	3506	1206	16467
27	Thermal Storage Equipment	22960	6522	690	30172
28	Thermal Storage Media	25550	1302	--	26852
	TOTAL DIRECT				415560
91	Construction Services				42803
92	Home Office Engr. Service				21198
93	Field Office Engr. Service				17299
	TOTAL BASE (DIRECT PLUS INDIRECT)				496860

Table 4-23

BASE COSTS
TES HSC PLANT #1C WITH ABOVEGROUND OIL/TACONITE, DUAL
MEDIA THERMAL STORAGE - 1,125,332 kW NET

ACCOUNT NUMBER	ITEM AND DESCRIPTION	TOTAL COST (IN THOUSANDS) EQUIPMENT	LABOR	MATERIAL	TOTAL
20	Land and Land Rights	0	0	2000	2000
21	Structures andImprovements	2197	15486	24329	42012
22	Boiler/Reactor Equipment	73336	31344	11580	116260
23	Turbine Plant Equipment	115059	19082	5721	139862
24	Electric Plant Equipment	10391	13812	8306	32509
25	Misc. Plant Equipment	5600	3068	761	9429
26	Main Cond. Heat Rej. Sys.	11755	3506	1206	16467
27	Thermal Storage Equipment	22960	6522	690	30172
28	Thermal Storage Media	42450	2162	---	44612
	TOTAL DIRECT				433320
91	Construction Services				44636
92	Home Office Engr. Servicd				22105
93	Field Office Engr. Service				18029
	TOTAL BASE (DIRECT PLUS INDIRECT)				518090

Table 4-24

BASE COSTS
TES HSC PLANT #2 UNDERGROUND CAVERN - 1,147,996 kW NET

ACCOUNT NUMBER	ITEM AND DESCRIPTION	TOTAL COST (IN THOUSANDS) EQUIPMENT	LABOR	MATERIAL	TOTAL
20	Land and Land Rights	0	0	2000	2000
21	Structures and Improvements	2197	15487	24328	[illegible]
22	Boiler/Reactor Equipment	73336	31344	11580	116260
23	Turbine Plant Equipment	112368	18234	5663	136265
24	Electric Plant Equipment	10460	13901	8362	32723
25	Misc. Plant Equipment	5599	3068	762	9429
26	Main Cond. Heat Rej. Sys.	11833	3529	1214	16576
27	Thermal Storage Equipment	2402	29171	5279	36852
28	Thermal Storage Media	0	8	46	54
	TOTAL DIRECT				392171
91	Construction Services				51813
92	Home Office Engr. Service				20534
93	Field Office Engr. Service				15206
	TOTAL BASE (DIRECT PLUS INDIRECT)				479724

Table 4-25

BASE COSTS
TES NUCLEAR LWR PLANT #3 WITH ABOVEGROUND FEEDWATER STORAGE IN PCIV - 1,220, 758 kW NET

Account NUMBER	ITEM AND DESCRIPTION	TOTAL COST (IN THOUSANDS) EQUIPMENT	LABOR	MATERIAL	TOTAL
20	Land and Land Rights	0	0	2000	2000
21	Structures and Improvements	5914	55820	39944	101678
22	Boiler/Reactor Equipment	93224	26806	8827	128857
23	Turbine Plant Equipment	97102	21776	13342	132220
24	Electric Plant Equipment	13486	18449	8657	40592
25	Misc. Plant Equipment	7197	3959	647	11810
26	Main Cond. Heat Rej. Sys.	16958	4952	1404	23314
27	Thermal Storage Equipment	56594	23322	2420	82336
28	Thermal Storage Media	0	0	32	38
	TOTAL DIRECT				522838
91	Construction Services				81673
92	Home Office Engr. Service				60599
93	Field Office Engr. Service				35237
	TOTAL BASE (DIRECT PLUS INDIRECT)				700347

Table 4-26

BASE COSTS
TES NUCLEAR LWR PLANT #4A WITH ABOVEGROUND OIL/ROCK GRAVEL, TRICKLE CHARGE THERMAL STORAGE FOR FEEDWATER HEATING - 1,222,869 kW NET

ACCOUNT NUMBER	ITEM AND DESCRIPTION	TOTAL COST (IN THOUSANDS) EQUIPMENT	LABOR	MATERIAL	TOTAL
20	Land and Land Rights	0	0	2000	2000
21	Structures and Improvements	5691	53718	38441	97850
22	Boiler/Reactor Equipment	93224	26806	8827	128857
23	Turbine Plant Equipment	100669	30444	6581	137694
24	Electric Plant Equipment	13591	18574	9052	41217
25	Misc. Plant Equipment	7204	3959	647	11810
26	Main Cond. Heat Rej. Sys.	17150	5007	1420	23577
27	Thermal Storage Equipment	32365	4430	480	37275
28	Thermal Storage Media	3195	130	0	3325
	TOTAL DIRECT				483605
91	Construction Services				74958
92	Home Office Engr. Service				55994
93	Field Office Engr. Service				32557
	TOTAL BASE (DIRECT PLUS INDIRECT)				647114

Table 4-27

BASE COSTS
TES NUCLEAR LWR PLANT #4B WITH ABOVEGROUND OIL/ROCK GRAVEL, DUAL MEDIA THERMAL STORAGE FOR FEEDWATER HEATING - 1,222,869 kW NET

ACCOUNT NUMBER	ITEM AND DESCRIPTION	TOTAL COST (IN THOUSANDS EQUIPMENT	LABOR	MATERIAL	TOTAL
20	Land and Land Rights	0	0	2000	2000
21	Structures and Improvements	5691	53718	38441	97850
22	Boiler/Reactor Equipment	93224	26806	8827	128857
23	Turbine Plant Equipment	100669	30444	6581	137694
24	Electric Plant Equipment	13591	18574	9052	41217
25	Misc. Plant Equipment	7204	3959	647	11810
26	Main Cond. Heat Rej. Sys.	17150	5007	1420	23577
27	Thermal Storage Equipment	32365	4430	480	37275
28	Thermal Storage Media	5996	244	--	6240
	TOTAL DIRECT				486520
91	Construction Services				75410
92	Home Office Engr. Service				56332
93	Field Office Engr. Service				32618
	TOTAL BASE (DIRECT PLUS INDIRECT)				650880

Table 4-28

BASE COSTS
TES NUCLEAR LWR PLANT #4C WITH ABOVEGROUND OIL/TACONITE, DUAL MEDIA THERMAL STORAGE FOR FEEDWATER HEATING - 1,222,869 kW NET

ACCOUNT NUMBER	ITEM AND DESCRIPTION	TOTAL COST (IN THOUSANDS) EQUIPMENT	LABOR	MATERIAL	TOTAL
20	Land and Land Rights	0	0	2000	2000
21	Structures and Improvements	5691	53718	38441	97850
22	Boiler/Reactor Equipment	93224	26806	8827	128857
23	Turbine Plant Equipment	100669	30444	6581	137694
24	Electric Plant Equipment	13591	18574	9052	41217
25	Misc. Plant Equipment	7204	3959	647	11810
26	Main Cond. Heat Rej. Sys.	17150	5007	1420	23577
27	Thermal Storage Equipment	32365	4430	480	37275
28	Thermal Storage Media	10260	420	--	10680
	TOTAL DIRECT				490960
91	Construction Services				76098
92	Home Office Engr. Service				56846
93	Field Office Engr. Service				32916
	TOTAL BASE (DIRECT PLUS INDIRECT)				656820

Table 4-29

BASE COSTS
CYCLING COAL FIRED PLANT, 12.41 MPa/510°C/510°C (1800 psig/950°F/950°F), 511,500 kW NET

ACCOUNT NUMBER	ITEM AND DESCRIPTION	TOTAL COST (IN THOUSANDS) EQUIPMENT	LABOR	MATERIAL	TOTAL
20	Land and Land Rights	0	0	2000	2000
21	Structures and Improvements	1346	9083	14121	24550
22	Boiler/Reactor Equipment	48534	20797	7669	77000
23	Turbine Plant Equipment	31251	8149	2080	41480
24	Electric Pl. &Equipment	4821	8466	5195	18482
25	Misc. Plant Equipment	3000	1643	407	5050
26	Main Cond. Heat Rej. Sys.	5490	1638	563	7691
27	Thermal Storage Equipment	--	--	--	0
28	Thermal Storage Media	--	--	--	0
	TOTAL DIRECT				176253
91	Construction Services				22566
92	Home Office Engr. Service				9195
93	Field Office Engr. Service				6806
	TOTAL BASE (DIRECT PLUS INDIRECT)				214820

Table 4-30

BASE COSTS
CYCLING COAL FIRED PLANT, 16.55 MPa/538°C/538°C
(2400 psig/1000°F/1000°F), 511,500 kW NET

ACCOUNT NUMBER	ITEM AND DESCRIPTION	TOTAL COST (IN THOUSANDS) EQUIPMENT	LABOR	MATERIAL	TOTAL
20	Land and Land Rights	0	0	2000	2000
21	Structures and Improvements	1536	10703	16639	28928
22	Boiler/Reactor Equipment	57157	24492	9031	90680
23	Turbine Plant Equipment	37369	9744	2487	49600
24	Electric Plant Equipment	5687	9986	6128	21800
25	Misc. Plant Equipment	4550	2492	620	7662
26	Main Cond. Heat Rej. Sys.	5490	1632	563	7000
27	Thermal Storage Equipment	--	--	--	--
28	Thermal Storage Media	--	--	--	--
	TOTAL DIRECT				207670
91	Construction Services				26588
92	Home Office Engr. Service				10834
93	Field Office Engr. Service				8028
	TOTAL BASE (DIRECT PLUS INDIRECT)				253120

The results of the above fifteen plants TOTAL investment costs as well as a summary of the direct and base costs are given in Table 4-31.

TOTAL Investment Cost of Thermal Energy Storage Systems

Modifications were made to the reference base HSC and nuclear LWR plants to incorporate the thermal energy storage systems. The ratio of the incremental cost in dollars for making modifications to incorporate thermal energy storage over the incremental increase in power (peak power during discharge less normal power of base plant) is called the TOTAL investment cost of thermal energy storage system. For the TES HSC plant, the base plant is the HSC nonreheat cycle plant producing 741,633 kW net and for the TES nuclear LWR plant the base plant is the nuclear LWR base plant producing 1,072,573 kW net.

Table 4-32 gives the cost comparison of HSC base plant with HSC thermal storage Plants #1A and #2 and also the incremental cost of the thermal energy storage systems peaking power, C_T.

Tables 4-33 and 4-34 provide the direct comparisons of major items of TES Plants #1A and #2, respectively, with the HSC base plant.

Table 4-35 gives the cost comparison of nuclear LWR base plant with nuclear thermal storage Plants #3 and #4A and also the incremental cost of the thermal energy storage systems peaking power, C_T.

Tables 4-36 and 4-37 provide the direct cost comparisons of major items of TES Plants #3 and #4A, respectively, with the nuclear LWR base plant.

Table 4-31

TOTAL INVESTMENT COSTS
(1976 $)

Description	Cost in Millions of Dollars			TOTAL Investment Cost in $/kW Net
	Direct Cost	Base Cost	Total Investment Cost	
• NUREG 0244, HSC Plant (794,416 kW)	275.05	335.24	594.05	747.78
• NUREG Modified, HSC Plant (741,000 kW)	264.10	321.89	570.39	769.75
• Non Reheat, HSC Base Plant (741,633 kW)	302.87	366.15	648.82	874.85
• NUREG 0241, Nuclear LWR Plant (1,138,610 kW)	420.96	568.83	894.20	785.34
• Nuclear LWR Base Plant (1,072,573 kW)	404.00	545.84	858.06	800.00
• TES HSC Plant #1A (1,125,332 kW)	404.92	484.13	857.88	762.34
• TES HSC Plant #1B (1,125,332 kW)	415.56	496.86	880.43	782.37
• TES HSC Plant #1C (1,125,332 kW)	433.32	518.09	918.05	815.81
• TES Plant #2 (1,147,996 kW)	392.17	479.72	850.07	740.48
• TES Nuclear LWR Plant #3 (1,220,758 kW)	522.84	700.35	1100.95	901.85
• TES Nuclear LWR Plant #4A (1,222,869 kW)	483.61	647.11	1017.26	831.87
• TES Nuclear LWR Plant #4B (1,222,869 kW)	486.52	650.88	1023.19	836.71
• TES Nuclear LWR Plant #4C (1,222,869 kW)	490.96	656.82	1032.53	844.35
• Cycling Coal Fired Plant, 12.41 MPa/510°C/ 510°C (1800 psig/950°F/950°F), (511,500 kW)	176.25	214.82	380.67	744.22
• Cycling Coal Fired Plant, 16.55 MPa/538°C/ 538°C (2400 psig/1000°F/1000°F), (511,500 kW)	207.67	253.12	448.52	876.87

Table 4-32

COST COMPARISON OF HSC BASE PLANT WITH HSC THERMAL STORAGE PLANTS

Account Description	Account No.	Nonreheat HSC Base Plant (741,633 kW)	HSC Plant #1A Oil/Rock Gravel (1,125,332 kW)	HSC Plant #2 Under-Ground Cavern (1,147,996 kW)
		10^6 $	10^6 $	10^6 $
Land & Land Rights	20	2.000	2.000	2.000
Structure & Improvements	21	41.415	42.012	42.012
Boiler Plant	22	116.260	116.260	116.260
Turbine Plant	23	94.036	139.862	136.265
Electric Plant	24	28.932	32.506	32.723
Miscellaneous Plant Equipment	25	8.737	9.429	9.429
Main Condenser, Heat Rejection	26	11.485	16.467	16.576
Thermal Storage Equipment	27	.0	30.172	36.852
Thermal Storage Media	28	.0	16.211	.054
Direct Cost		302.865	404.919	392.171
Base Cost		366.150	484.133	479.724
TOTAL Investment Cost		648.818	857.884	850.071
TOTAL Investment Cost, $/kW		874.85	762.34	740.48
TES Cost, C_T, $/kW		--	544.87	495.25

Table 4-33

DIRECT COST COMPARISON OF MAJOR ITEMS OF TES PLANT #1A WITH HSC BASE PLANT

HSC Base Plant Direct Cost - $302,865,000
Plant #1A, Total Direct Cost - $404,919,000
Δ Direct Cost - $102,054,000

Description	Account Numbers	HSC Base Plant (10^6 $)	Plant #1A (10^6 $)	Δ Direct Cost (10^6 $)
(P) Turbine	231	66.900	99.765	32.865
(P) Feedwater Heaters	234	10.348	15.039	4.691
(P) Condensers	233	8.760	13.880	5.120
(P) Cooling Tower	26	11.485	16.467	4.982
(P) Switchgear, Protectives & Wiring	241,244 & 246	26.420	29.994	3.574
(P) Turbine Building & Foundation	213 & 237	10.840	12.795	1.955
(P) Thermal Storage Equipment				
(P) Oil/Water Heat Exchanger	271	--	13.313	13.313
(P) Piping & Valves	272	--	5.159	5.159
(S) Inerting System	274	--	.140	.140
(S) Storage Tanks	275	--	8.288	8.288
(P) Instrumentation & Controls	276	--	.472	.472
(P) Pumps	273	--	2.800	2.800
Thermal Storage Media: -				
(S) Rocks	282	--	8.760	8.760
(S) Oil	281	--	7.451	7.451
(P) Miscellaneous Plant Items Increase	235,236,237, 242,252, 253 & 254	--		2.484
			TOTAL Δ	= 102.054

Superscript (P) = Power Related Costs
Superscript (S) = Storage Related Costs

Table 4-34

DIRECT COST COMPARISON OF MAJOR ITEMS OF TES PLANT #3 WITH HSC BASE PLANT

HSC Base Plant Direct Cost - $302,865,000
Plant #2, Total Direct Cost - $392,171,000
Δ Direct Cost - $ 89,306,000

Description	Account Numbers	HSC Base Plant (10^6 $)	Plant #2 (10^6 $)	Direct Cost (10^6 $)
(P) Turbine	231	66.900	99.765	32.865
(P) Feedwater Heaters	234	11.772	11.772	.000
(P) Condensers	233	8.760	13.091	4.331
(P) Cooling Tower	26	11.485	16.576	5.091
(P) Switchgear, Protective & Wiring	241,244 & 246	26.420	30.211	3.791
(P) Turbine Building & Foundation	2T3 & 237	10.840	12.795	1.955
(P) Thermal Storage Equipment				
(P) Piping & Valves	272	--	1.505	1.505
(P) Pumps	273	--	.320	.320
(S) Caverns	275	--	34.452	34.452
(P) Instrumentation & Controls	276	--	.155	.155
(S) Condensate Tanks	275	--	.420	.420
Thermal StorageMedia				
(S) Water	281	--	.054	.054
(P) Miscellaneous Plant Items Increase	235,236,237, 242,252,253 & 254	--		4.367
			TOTAL Δ =	89.306

Superscript (P) = Power Related Costs
Superscript (S) - Storage Related Costs

Table 4-35

COST COMPARISON OF NUCLEAR LWR BASE PLANT WITH NUCLEAR THERMAL STORAGE PLANTS

Table 3-35 Cost Comparison of Nuclear PWR Base Plant With Nuclear Thermal Storage Plants

Account Description	Account Numbers	Nuclear LWR Base Plant (1,072,573 kW)	LWR Plant #3 Feedwater Storage in PCIV (1,220,758 kW)	LWR Plant #4A Oil/Rock (1,222,869 kW)
		10^6 $	10^6 $	10^6 $
Land	20	2.000	2.000	2.000
Structures	21	96.719	101.678	97.850
Reactor	22	128.857	128.857	128.857
Turbine Equipment	23	106.170	132.220	137.694
Electric Plant	24	38.062	40.592	41.217
Miscellaneous	25	11.597	11.803	11.810
Heat Rejection	26	20.596	23.315	23.577
Thermal Storage Equipment	27	.000	82.336	37.275
Thermal Storage Media	28	.000	.038	3.325
Direct Costs		404.001	522.838	483.605
Base Cost		545.841	700.347	647.114
TOTAL Investment Cost		858.062	1100.945	1017.263
TOTAL Investment Cost, $/kW		800	901.85	831.87
TES Costs, C_T, $/kW		--	1639.05	1059.25

Table 4-36

DIRECT COST COMPARISON OF MAJOR ITEMS OF TES PLANT #3 WITH NUCLEAR LWR BASE PLANT

Nuclear LWR Base Plant Direct Cost = $404,001,000
Nuclear LWR Plant #3 Direct Cost = $522,838,000
Δ Direct Cost = $118,837,000

Description	Account Numbers	Nuclear LWR Base Plant (10^6 $)	Nuclear LWR Plant #3 (10^6 $)	Δ Direct Cost (10^6 $)
(P) Turbine	231	57.260	73.809	16.549
(P) Feedwater Heaters	234	14.920	19.248	4.328
(P) Condensers	233	14.100	17.641	3.541
(P) Switchgear, Protectives & Wiring	241,244 & 246	34.200	36.730	2.530
(P) Cooling Tower	26	20.596	23.315	2.718
(P) Thermal Storage Equipment				
(P) Piping & Valves	272	--	3.020	3.020
(P) Pumps, etc.	273	--	.950	.950
(S) PCIV	275	--	78.366	78.366
Thermal Storage Media				
(S) Water	281	--	.038	.038
(S) PSIV Building	213	--	4.800	4.800
(P) Miscellaneous Plant Items Increase	213,235,236, 237,242,252, 253 & 254	--		1.997
			TOTAL Δ	= 118.837

Superscript (P) = Power Related Costs
Superscript (S) - Storage Related Costs

Table 4-37

DIRECT COST COMPARISON OF MAJOR ITEMS OF TES PLANT #4A WITH NUCLEAR LWR BASE PLANT

Nuclear LWR Base Plant Direct Cost = $404,001,000
Nuclear LWR Plant #4A Direct Cost = $483,605,000
Δ Direct Cost = $ 79,604,000

Description	Account Numbers	Nuclear LWR Base Plant (10^6 $)	Nuclear LWR Plant $4A ($10^6$ $)	Δ Direct Cost (10^6 $)
(P) Turbine	231	57.260	73.809	16.549
(P) Feedwater Heaters	234	14.920	23.007	8.087
(P) Condenser	233	14.100	18.284	4.184
(P) Cooling Tower	26	20.596	23.577	2.981
(P) Switchgear, Protectives & Wiring	241,244 & 246	34.200	37.355	3.155
(P) Thermal Storage Equipment				
(P) Heat Exchanger	271	--	30.279	30.279
(P) Piping & Valves	272	--	2.800	2.800
(P) Pumps	273	--	1.434	1.434
(S) Inerting System	274	--	.100	.100
(S) Storage Tanks	275	--	2.072	2.072
(P) Instrumentation & Controls	276	--	.590	.590
Thermal Storage Media				
(S) Oil	281	--	1.135	1.135
(S) Rocks	282	--	2.190	2.190
(P) Miscellaneous Plant Items Increase	213,235,236, 237.242,252, 253, & 254	--		4.048
			TOTAL Δ	= 79.604

Superscript (P) = Power Related Cost
Superscript (S) = Storage Related Cost

These direct costs have been converted to TOTAL investment costs of the thermal energy storage systems of TES power plants as designed and are tabulated in Table 4-38. The TES system cost is the sum of power related cost and energy related costs. The former includes the cost of the peaking turbine (or incremental costs for modifying the main turbine), and heat exchangers, evaporators, pipes, pumps, etc. which are energy flow and mass flow dependent. The latter included the costs proportional to the energy stored such as the storage media, and tanks or containment. Using the nomenclature:

C_T = TOTAL Investment Cost of energy storage which is sum of the power and energy storage related costs

C_P = Costs of Power related items of energy storage

C_S = Costs of energy Storage related items of energy storage

t = Number of daily hours of storage discharge at full rated power

$$C_T = C_P + C_S \cdot t \qquad (4\text{-}1)$$

Items of Power and energy Storage related costs of TES Plants #1A, 2, 3, and 4A are marked with (P) and (S) superscripts on Tables 4-33, 4-34, 4-36 and 4-37. The sum of these costs divided by the incremental increase in net electric power output from the TES plant provides the C_P and $C_S \cdot t$ values as shown in the Table 4-38. Cases 1B, 1C and 4B, 4C were also evaluated for performing sensitivity study and selecting the optimum thermal energy storage system with least costs for TES Plants #1 and #4.

Levelized Annual Cost and Levelized Busbar Cost

The levelized annual cost ($\overline{A}_c$) is defined as the uniform annual payment to own, operate and maintain a plant during its lifetime. It is expressed in constant base year dollars. If collected in revenues each year, the $\overline{A}_c$ amount would constitute a revenue distribution with exactly

the same present value as the summed present values of all the separate non-levelized cost distributions. Thus $\overline{A}_c$, the Levelized Annual Cost, in $/kW·yr, is given by

$$\overline{A}_c = C_T \cdot FCR + (C_F \cdot HR \cdot T \cdot L_F) + (C_{OMF} + C_{OMV} \cdot T/1000)\ L_{FOM} \qquad (4\text{-}2)$$

where

C_T = TOTAL Investment Costs of Thermal Energy Storage, $/kW

FCR = Fixed Charge Rate; 0.18

C_F = Cost of Fuel; 1.04 $/MBtu for Coal and 0.66 $/MBtu for Nuclear Fuel

HR = Heat Rate, Btu/kWh

T = Annual Operating Time, h/yr

L_F = Levelizing Factor for Fuel; 2.07 for Coal and 2.46 for Nuclear

C_{OMF} = Cost of Fixed Operations and Maintenance;
2.52 $/kW·yr for Coal Plant
2.84 $/kW·yr for Nuclear Plant

C_{OMV} = Cost of Variable Operations and Maintenance;
2.98 mills/kWh for Coal Plant
0.72 mills/kWh for Nuclear plant

L_{FOM} = Levelizing Factor for Operations and Maintenance; 1.886

The levelized annual cost per kilowatt output to own and operate the system over the life of the plant divided by the annual hours of operation is defined as $\overline{BBEC}$ the Levelized Busbar Energy Cost, in mills/kWh, and is given by

$$\overline{BBEC} = \overline{A}_c \cdot 1000/T \qquad (4\text{-}3)$$

Table 4-38

TOTA' INVESTMENT COST OF THERMAL ENERGY STORAGE SYSTEMS (C_T)

Annual Operation 250·t (h/yr)	Daily Operation t (h)	C_P ($/kW)	C_S ($/kWh)	$C_S \cdot t$ ($/kW)	C_T ($/kW)
PLANT #1 OIL/ROCK - ABOVEGROUND - STEAM GENERATION					
Case 1A - (5) of (15) Tanks Filled, Rock Gravel (Trickle-Charge System)					
1500	6	408.83	22.67	136.04	544.87
Case 1B - All (15) Tanks Filled, Rock Gravel (Dual Media System)					
1500	6	408.86	32.46	194.79	603.65
Case 1C - All (15) Tanks Filled, Taconite (Dual Media System)					
1500	6	408.84	48.81	292.85	701.69
PLANT #2 UNDERGROUND CAVERN - STEAM GENERATION					
1475	5.9	308.95	31.58	186.30	495.25
PLANT #3 PCIV - FEEDWATER					
1495	5.98	456.72	197.71	1182.33	1639.05
PLANT #4 OIL/ROCK ABOVEGROUND FEEDWATER					
Case 4A - (1) of (6) Tanks Filled, Rock Gravel (Trickle Charge System)					
1510	6.04	982.31	13.27	80.13	1062.44
Case 4B - All (6) Tanks Filled, Rock Gravel (Dual-Media System)					
1510	6.04	982.32	20.06	121.14	1103.45
Case 4C - All (6) Tanks Filled, Taconite (Dual-Media System)					
1510	6.04	982.32	30.78	185.87	1168.18

Calculations were performed for $\overline{A}_c$ and $\overline{BBEC}$ of thermal energy storage systems, using C_T values from Table 4-38, heat rate values from Tables 4-4, 4-7, 4-10 and 4-13 and other constant values as described. These results are shown in Table 4-39 and Figures 4-53 and 4-54 for the thermal energy storage systems designed for daily 6 hours discharge.

Calculations were also performed for TES Plant #2 designed for greater daily hours of discharge. This analysis was based on using the C_P and C_S values from Table 4-38. For large installations, where multiple storage tanks are required so that costs increase in proportion to capacity, as in all four plants considered here, the values of C_P and C_S should be nearly constant and provide good estimates of variations in storage costs with changes in capacity. Using these values of C_P and C_S for determining C_T from equation 4-1 as the design time t is varied, $\overline{A}_c$ and $\overline{BBEC}$ are determined from equations 4-2 and 4-3.

The results are plotted in Figure 4-55. As the design hours increase to provide emergency capacity the $\overline{BBEC}$ decreases, but only if operated for the full design hours. If the plant operates at near 1500 hours, where most plants would operate, the costs increase if the plant is designed for more than 1500 hours. The effects of these costs on utility operation will be discussed in the next Section.

Similar calculations were performed for the cycling coal fired plants. For these plants, however, there is no change in capital cost with change in design hours of operation, so that C_T is constant for all hours. The results of the levelized annual cost and the levelized busbar cost of the cycling coal fired plants are given in Table 4-40 and Figures 4-56 and 4-57.

Table 4-39

LEVELIZED ANNUAL COST ($\overline{A}_C$) AND LEVELIZED BUSBAR COST ($\overline{BBEC}$) OF THERMAL ENERGY STORAGE SYSTEMS

t	T	C_T	$C_T \cdot FCR$	Heat Rate	$C_F \cdot HR \cdot T \cdot L_F$	$\frac{C_{OMV} \cdot T}{1000}$	$\overline{A}_C$	$\overline{BBEC}$
$\left(\frac{h}{d}\right)$	$\left(\frac{h}{yr}\right)$	($/kW)	$\left(\frac{\$}{kW \cdot yr}\right)$	$\left(\frac{Btu}{kWh}\right)$	$\left(\frac{\$}{kW \cdot yr}\right)$	$\left(\frac{\$}{kW \cdot yr}\right)$	$\left(\frac{\$}{kW \cdot yr}\right)$	(mills/kWh)
PLANT #1 OIL/ROCK ABOVEGROUND STEAM GENERATION (HSC PLANT), 383.699MW								
Case #1A - (5) of (15) Tanks Filled, Rock Gravel (Trickle Charge System)								
0	0	544.87	98.08	14697	0	0	102.83	∞
3	750	↓	↓	↓	23.73	2.24	130.79	174.39
6	1500	↓	↓	↓	47.46	4.47	158.72	105.81
Case #1B - All (15) Tanks Filled, Rock Gravel (Dual Media System)								
0	0	603.65	108.66	↓	0	0	113.41	∞
3	750	↓	↓	↓	23.73	2.24	141.37	188.49
6	1500	↓	↓	↓	47.46	4.47	169.30	112.87
Case #1C - All (15) Tanks Filled, Taconite (Dual Media System)								
0	0	701.69	126.30	↓	0	0	131.05	∞
3	750	↓	↓	↓	23.73	2.24	159.01	212.01
6	1500	↓	↓	↓	47.46	4.47	186.94	124.63
PLANT #2 UNDERGROUND CAVERN - (HSC PLANT), 406.363MW								
0	0	495.25	89.15	12144	0	0	93.90	∞
3	750	↓	↓	↓	19.81	2.24	117.74	156.99
5.9	1475	↓	↓	↓	38.56	4.39	140.74	95.42
PLANT #3 PCIV - FEEDWATER (NUCLEAR PLANT), 148.185MW								
0	0	1639.05	295.03	14863	0	0	300.39	∞
3	750	↓	↓	↓	18.10	0.54	319.50	426.00
5.98	1495	↓	↓	↓	36.23	1.08	338.48	226.41
PLANT #4 OIL/ROCK ABOVEGROUND FEEDWATER (NUCLEAR PLANT), 150.296MW								
Case #4A - (1) of (6) Tank Filled, Rock Gravel (Trickle Charge System)								
0	0	1062.44	191.24	23139	0	0	196.60	∞
3	750	↓	↓	↓	28.19	0.54	225.79	337.05
6.04	1510	↓	↓	↓	56.72	1.09	255.36	169.15
Case #4B - All (6) Tanks Filled, Rock Gravel (Dual Media System)								
0	0	1103.45	198.62	↓	0	0	203.98	∞
3	750	↓	↓	↓	28.19	0.54	233.17	310.90
6.04	1510	↓	↓	↓	56.72	1.09	262.74	174.04
Case #4C - All (6) Tanks Filled, Taconite (Dual Media System)								
0	0	1168.18	210.27	↓	0	0	215.63	∞
3	750	↓	↓	↓	28.18	0.54	244.92	326.43
6.04	1510	↓	↓	↓	56.7	1.09	274.39	181.76

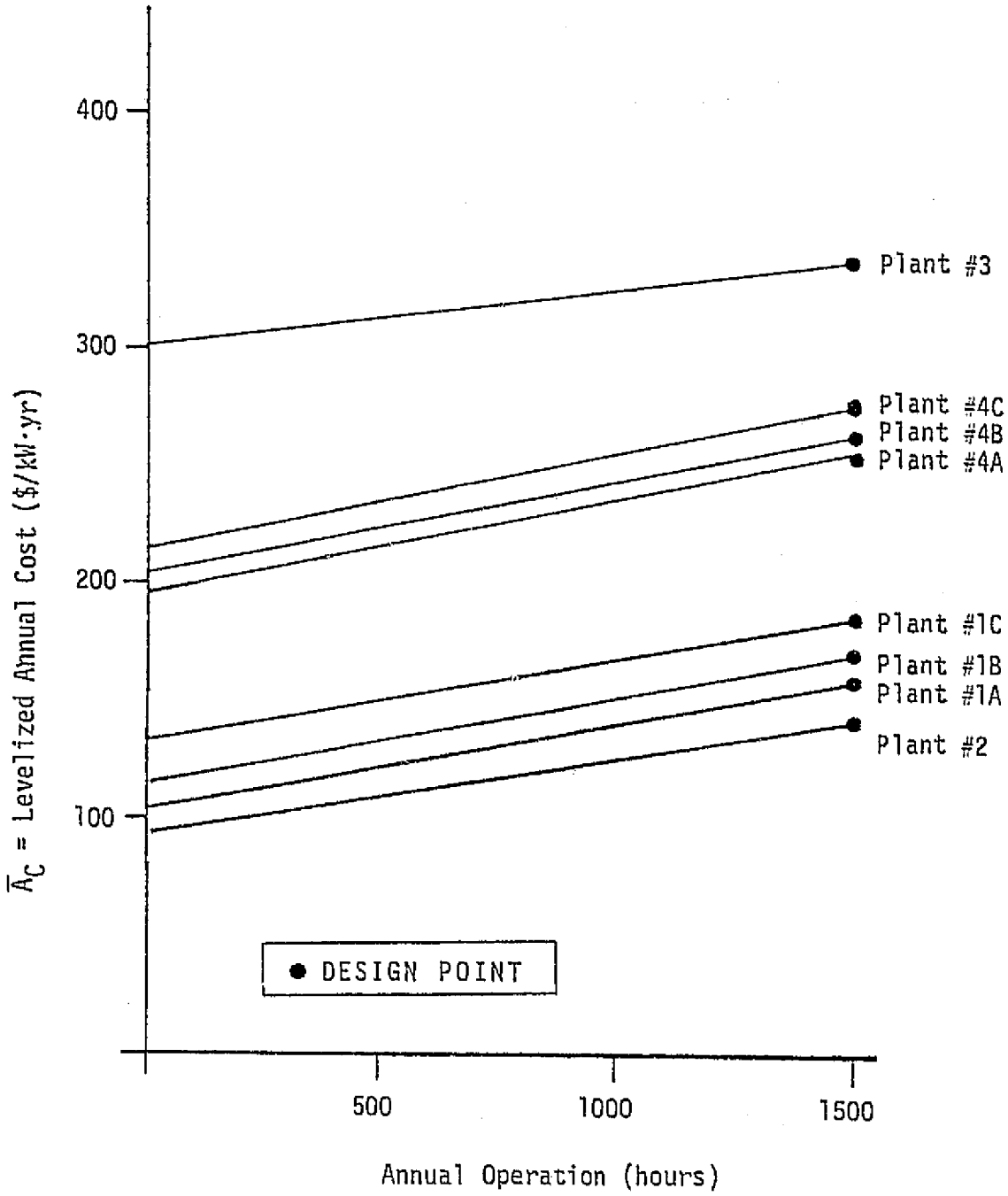

Figure 4-53. Levelized Annual Cost Versus Annual Hours of Operation of Various Thermal Energy Storage Systems

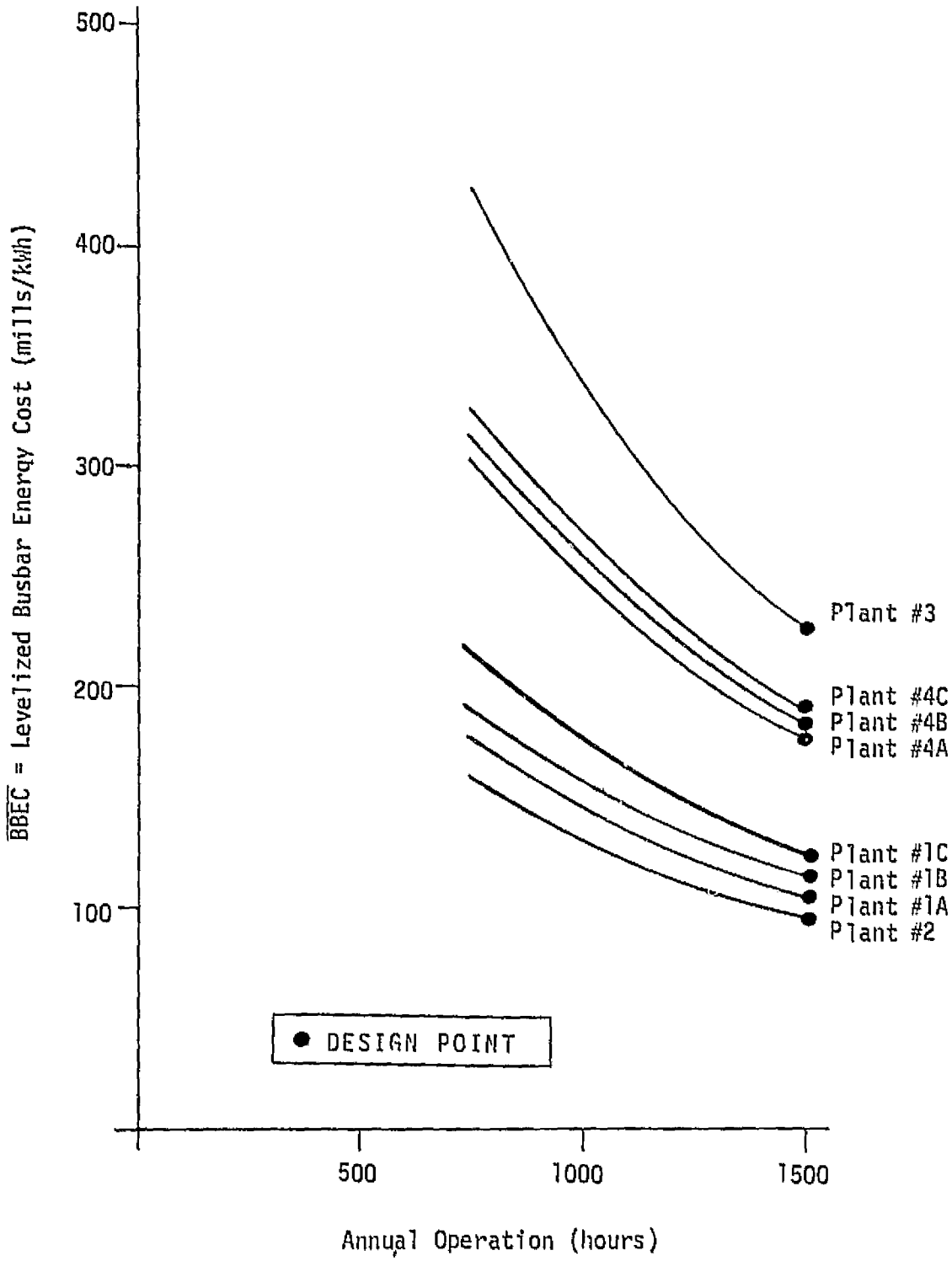

Figure 4-54. Levelized Busbar Energy Cost Versus Annual Hours of Operation of Various Thermal Energy Storage Systems

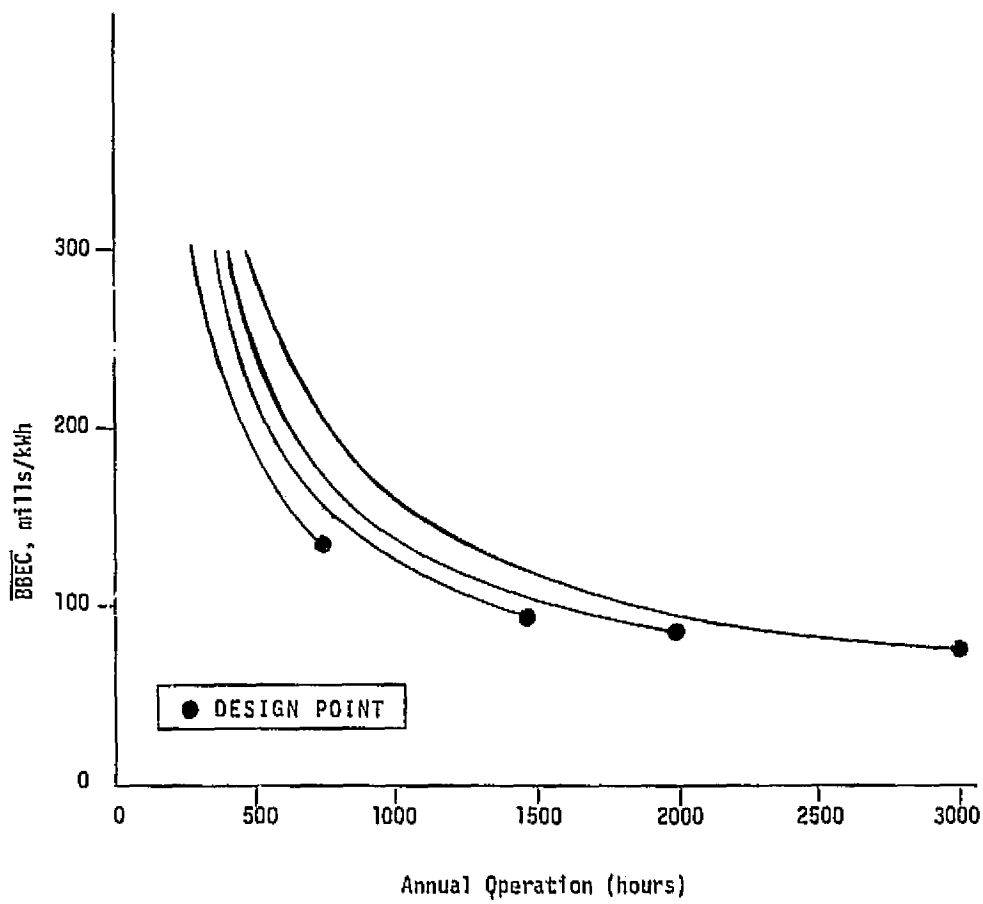

Figure 4-55. Levelized Busbar Energy Cost Versus Annual Hours of Operation of TES Plant #2 for Various Design Hours

Table 4-40

LEVELIZED ANNUAL COST AND LEVELIZED BUSBAR COST OF CYCLING COAL FIRED PLANTS

t	T	C_T	$C_T \cdot FCR$	Heat Rate	$C_F \cdot HR \cdot T \cdot L_F$	$\frac{C_{OMV} \cdot T}{1000}$	$\bar{A}_C$	$\overline{BBEC}$
$\left(\frac{h}{d}\right)$	$\left(\frac{h}{yr}\right)$	($/kW)	$\left(\frac{\$}{kW \cdot yr}\right)$	$\left(\frac{Btu}{kWh}\right)$	$\left(\frac{\$}{kW \cdot yr}\right)$	$\left(\frac{\$}{kW \cdot yr}\right)$	$\left(\frac{\$}{kW \cdot yr}\right)$	$\left(\frac{mills}{kWh}\right)$
PLANT #5, CYCLING COAL FIRED PLANT (1800 PSIG/950°F/950°F), 511,500 kW								
0	0	744.22	133.96	10324	0	0	138.71	∞
3	750				16.67	2.24	159.61	212.81
6	1500				33.34	4.47	180.48	120.32
9	2250				50.00	6.71	201.37	89.50
PLANT #6, CYCLING COAL FIRED PLANT (2400 PSIG/1000°F/1000°F), 511,500 kW								
0	0	876.87	157.84	9566	0	0	162.59	∞
3	750				15.44	2.24	182.20	243.01
6	1500				30.89	4.47	201.91	134.61
9	2250				46.33	6.71	221.58	98.48

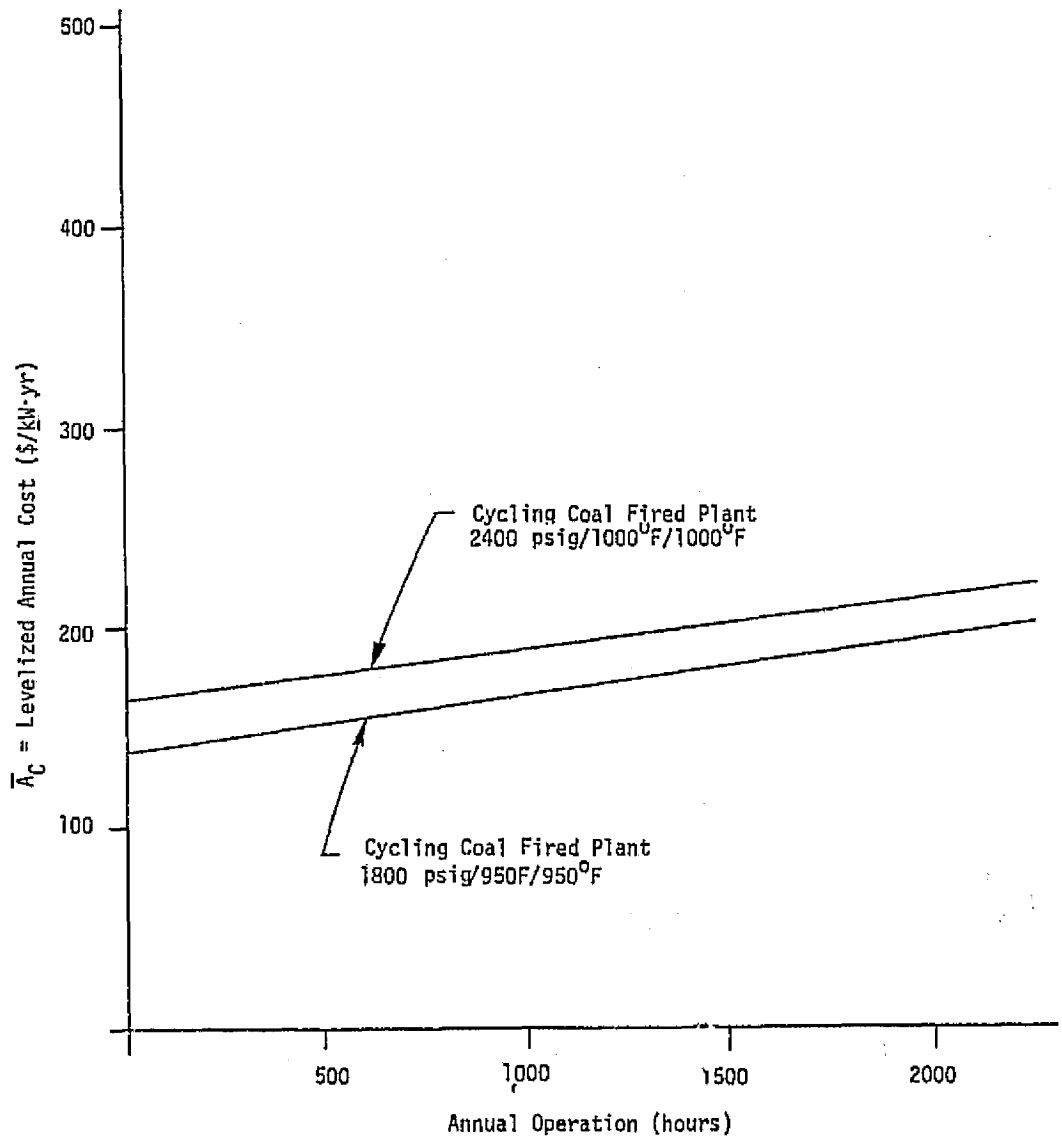

Figure 4-56. Levelized Annual Cost Versus Annual Hours of Operation of Cycling Coal Fired Plants

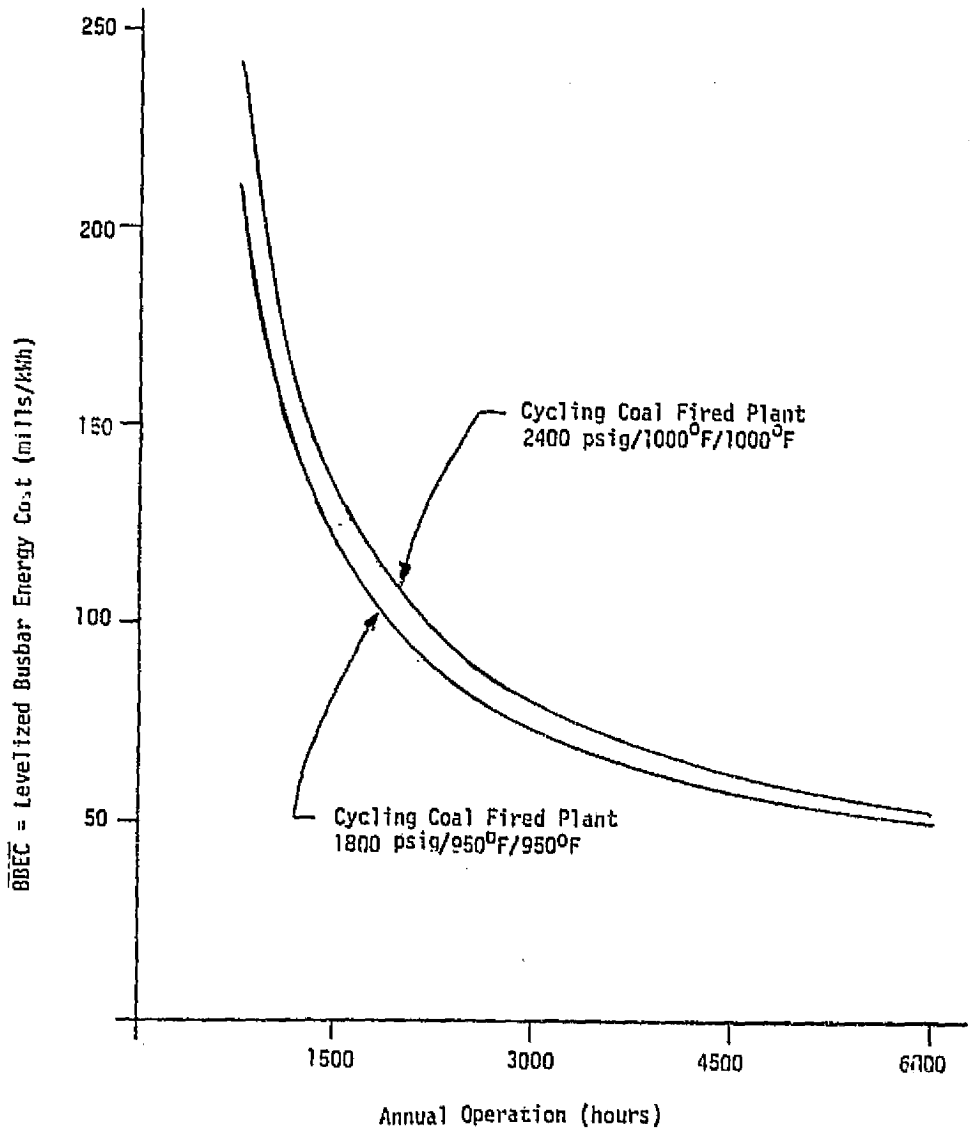

Figure 4-57. Levelized Busbar Energy Cost Versus Annual Hours of Operation of Cycling Coal Fired Plants

The results indicate that $\overline{BBEC}$ in mills/kWh on thermal energy storage only for a daily 6 hours discharge time are:

95.4 for HSC Plant #2, Underground Cavern - Steam Generation

105.8 for HSC Plant #1A Oil/Rock Aboveground Storage

175.7 for Nuclear Plant #4A, Aboveground Oil/Rock Storage for Feedwater Heating

226.4 for Nuclear Plant #3 Aboveground Feedwater in PCIV

$\overline{BBEC}$ in mills/kWh of cycling coal fired plants for a daily 6 hours discharge time are:

120.3 for 1800 psig/950°F/950°F reheat steam cycle

134.6 for 2400 psig/1000°F/1000°F reheat steam cycle.

REFERENCES FOR SECTION 4

1. Hausz, W; Berkowitz, B.J., and Hare, R.C.; "Conceptual Design of Thermal Energy Storage Systems for Near-Term Electric Utility Applications"; Volume 1: Screening of Concepts; DOE/NASA/0012-78/1 Vol. 1; EPRI RP1082-1, NASA CR-159411, GE78TMP-60 Vol. 1, October 1978 and EPRI EM-1037.

2. United Engineers and Constructors, Inc.; "Capital Cost: Low and High Sulfur Coal Plants — 800 MW_e"; Volumes 1, 2, and 3, NUREG-0244, COO-2477-8, Philadelphia, Pennsylvania, June 1977.

3. United Engineers & Constructors, Inc.; "Capital Cost: Pressurized Water Reactor Plant", Volumes 1 and 2, NUREG-0241, COO-2477-5, Philadelphia, Pennsylvania, June 1977.

4. Field, J.M.; "Extended Testing of Storage Fluids and Flow Loop Experiment"; Semiannual Review of Solar Thermal Central Power Systems; Pages 231 through 235, SAND 78-8015, April 1978.

5. General Electric Company - Advanced Energy Programs (GE-AEP), A Proposal for Thermal Energy Storage Subsystems for Solar Heating and Cooling Applications, Category TES-4, Area 2, Proposal C77094, Prepared for the U.S. Energy Research and Development Administration, Space Division, Philadelphia, Pennsylvania, April 26, 1977.

6. Gilli, P.V.; Beckmann, G., and Schilling, F.E.; "Thermal Energy Storage Using Prestressed Cast Iron Vessels (PCIV), Final Report COO-2886-2; Prepared for ERDA; Institute of Thermal Power and Nuclear Engineering, Graz University of Technology, Graz, Austria, June 1977.

7. Electric Power Research Institute (EPRI), "Technical Assessment Guide", EPRI PS-866-SR, Technical Assessment Group, Palo Alto, California, June 1978.

Section 5

UTILITY BENEFIT ANALYSIS

OBJECTIVES

The objectives of Task III of the Thermal Energy Storage (TES) contract are to define the benefits to the utilities of the TES systems in terms of reduced production costs, displacement of conventional peaking capacity, reduced consumption of scarce fuel, and improved utilization of mid-range generating units.

SCOPE OF WORK

The benefits to utilities are to be determined for the four TES systems investigated in detail and conceptually designed in Task II and then compared to gas turbines and cycling coal fired plants.

ROLE OF ENERGY STORAGE IN UTILITY SYSTEMS

About 9000 MW (discharge rating) of energy storage plants have been installed on U.S. utility systems since the first one in 1928 - the Rocky River pumped storage hydro plant of the Connecticut Light and Power Company. All of them have been pumped hydro because of the long life, reliability, and low operating and maintenance cost of such plants. Storage has long been recognized as beneficial because of the variability of the utility load during the course of a day or week, and the wide range of fuel cost per kWh of the generating units available to serve it.

The capital investment required for storage conversion and storage reservoirs is generally equal to or greater than that required for at least some kinds of complete production facilities. Hence, for storage systems to be viable, there must be some economic incentive other than that of capital savings. This opportunity exists because of the mixture

of old and new and different kinds of generating units on a typical generation system and the attendant variation in current production costs over a wide range - varying from perhaps 7 or 8 mills/kWh for nuclear units to 30 or 40 mills/kWh for peaking gas turbines. While it is not possible to use storage systems to transfer the very lowest cost generation from the time of baseload to the time of peak load (because, economically, it will be running constantly at full load output all of the time anyway), it may be possible to transfer the cost of some mid-range generation to the time of peak with a resulting net savings. The cost savings which may be realized depend on the operating efficiencies and fuel costs of the conventional generating units in addition to the round-trip efficiency of the storage plant.

To fully understand how generating system fuel savings can be obtained using storage systems, it is necessary to recognize two categories of storage. Figure 5-1 is a simple diagram of a generating system consisting of several conventional thermal generating units connected to a common A-C electrical bus serving a load. In practice, of course, the generating units and the loads are connected to many busses geographically remote from each other but interconnected by transmission lines. From the standpoint of this discussion of energy flow and economic operation, however, the technology may be adequately explained by this simplification. At the top of the diagram is shown a storage system which may be called <u>general storage</u> because its source of energy for charging the storage reservoir is the generating system in general: no one generating unit or energy source may be identified as supplying the stored energy. At the lower part of the diagram is shown a storage system which may be called <u>dedicated storage</u> because only energy from the source associated with a particular generating unit may be stored.

In general storage, the energy conversion apparatus always converts A-C electricity to another form of energy. Examples are pumped storage hydro, flywheels and batteries.

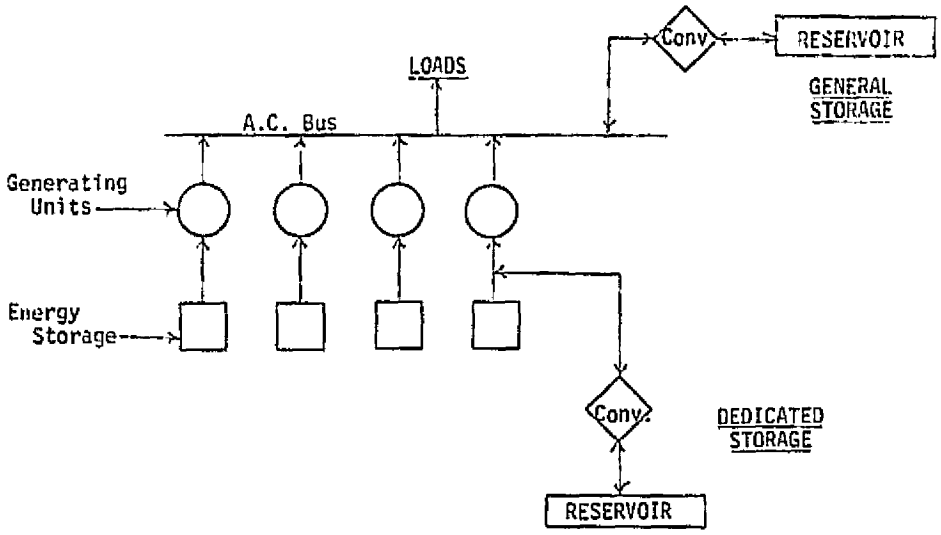

Figure 5-1. Energy Storage Systems

In dedicated storage, energy is removed from a generation cycle partway through the conversion from source to A-C electricity and either stored directly or converted to a third form and stored. Thermal Energy Storage (TES) is an example of dedicated storage where energy is extracted from the steam cycle and stored directly in pressurized underground caverns or in containers filled with oil and rocks.

Operation of General Storage

Once a storage system has been purchased and installed as part of a generating system, its capital costs are "sunk"; the storage system may be operated or not depending upon the objectives of the generating system. The prime objective of the generating system is never to fail to serve the consumer demand. At certain times the discharge capacity of the storage reservoir may be essential to meet the peak load. This may or may not represent economic operation of the storage system. At other times when the discharge capacity is not required to meet the peak load, it may still be economical, from a fuel cost standpoint, to operate the storage system.

In theory, if the storage system has been properly designed and applied to the particular generating system involved, it should seldom have to be operated when it is uneconomical.

The operation of general energy storage during a peak day in August (summer peaking utility) is illustrated in Figure 5-2. Although not completely realistic because it does not reflect hourly changes in unit commitment or the impact of minimum load points, the figure is useful for discussion purposes. The vertical scale at the left measures the hourly loads in percent of installed generating capacity. The bar chart at the right represents, in proportion to the peak load, the capacity of generation units available for use. Since August is the peak load month, no units are down for planned maintenance and the available capacity equals the installed capacity. It is apparent that in serving this particular load curve the nuclear units would run continuously as would several fossil coal units. Other higher cost units would run for varying times during the day.

The operation of a general storage system is shown by the cross-hatched areas marked "charge" and "discharge". During the charging time, the storage system is taking A-C electric power from the generating system which effectively increases the load. During the discharge time the storage system is supplying energy and capacity, effectively decreasing the load "seen" by the generating system. For purposes of discussion assume that the generating units whose load must be increased in order to supply the charging energy have costs of 12 to 14 mills/kWh, averaging to about 13. During the discharge cycle, the generating units which otherwise would be operating but which now may be reduced in load or shut down completely are presumed to have production costs of 28-32 mills/kWh, averaging about 30. There are losses in the conversion of A-C electric energy into stored energy, and there are also losses when the stored energy is reconverted into A-C electrical energy. For purposes of analysis it is convenient and conventional to assign all of the losses to the charging portion of the cycle. This is illustrated in Figure 5-2 where the charge area for energy is about 40% larger than the discharge area. This corresponds to an overall "round-trip" efficiency of about 71%.

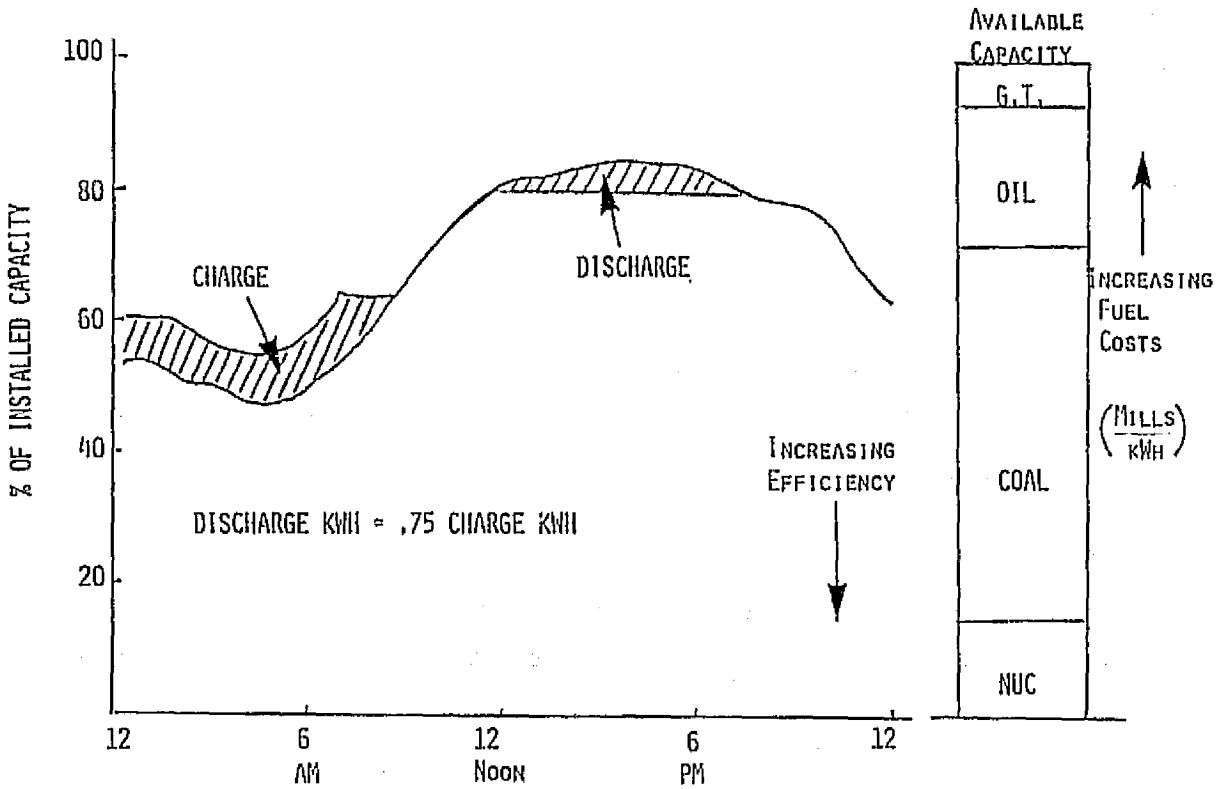

Figure 5-2. Operation of System Storage - Peak Day in August

If the cost of the charging energy is thus 13 mills/kWh, then the cost of stored energy is 13/.71 or 18.3 mills/kWh. This, compared with the 30 mills/kWh cost of generating the peak load in the absence of a storage system, gives a fuel saving of 11.7 mills/kWh resulting from operation of the storage system. At 1000 hours/year discharge time, an 18% fixed charge rate, a 6% inflation, and 10% discount rate, this is equivalent to a saving of 124 $/kW (11.7 x 1.9 levelizing factor/0.18 = 124) capital investment. Obviously, this saving will not pay for the capital investment in storage reservoir and conversion apparatus, nor does it need to. There is a corresponding saving in capital investment in conventional generation which would, in the absence of the storage system, be required to serve the peak load now served by the storage system. The fuel cost saving plus the capital investment savings associated with the

C-4

the use of energy storage can be viewed as the value of energy storage. This concept of value will be discussed in more detail later in this section.

The process of determining the value of energy storage in an electric utility is more complex than the previous illustrative example might indicate because it is necessary to account for day by day and seasonal load changes, equipment maintenance requirements and other operating constraints. For example, consider Figure 5-3 which illustrates the operation of general system energy storage during a low load time period in March. Since the loads are relatively low, some conventional generating capacity is on scheduled maintenance. As a result, the available capacity is less than 75% of total installed capacity. The operation of the storage system, shown by the crosshatched area, is considerably less than during the peak day in August. The reason for this is that there is very little load being served with high cost oil-fired capacity. There is no incentive for additional charging and discharging because the ratio of off-peak coal cost (mills/kWh) to on-peak coal cost is greater than the round trip efficiency of the storage system.

Proper evaluation of energy storage requires detailed analysis of hourly loads and generation, and simulation of total system operation and costs. Methods of doing this have been available for many years (Reference 5-1).

Operation of Dedicated Storage

Contrary to frequent supposition, the operating requirements of a dedicated storage system for generating system security (assuredly meeting the peak load), and economy (minimizing total system fuel cost) are, except for differences in the reliability of the systems, identical to those of general storage. This is illustrated in Figure 5-4 where some coal capacity of Figure 5-2 has been replaced with an energy storage system dedicated to a coal plant. The specific output profile shown in Figure 5-4 is for the Thermal Energy Storage Plant #2 which has an eight

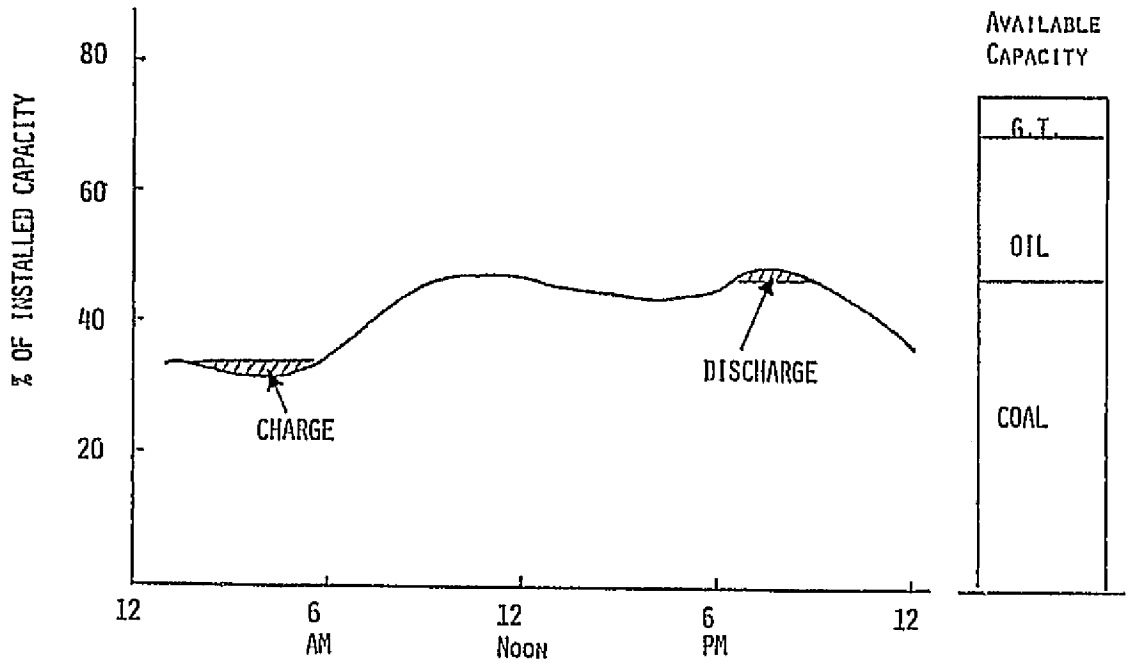

Figure 5-3. Operation of System Storage - Peak Day in March

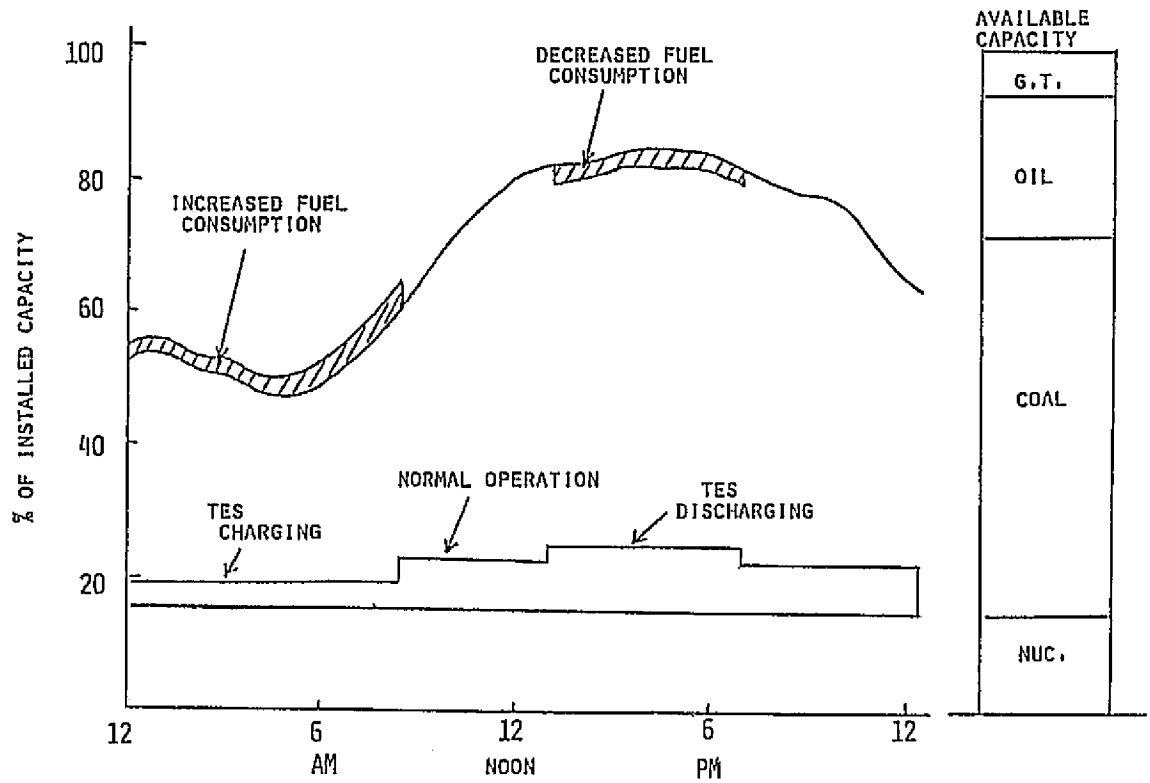

Figure 5-4. Operation of Dedicated Energy Storage

hour charge and six hour discharge. During charging operations steam is extracted from the cycle to permit charging of the storage reservoir. At the time of system peak load, the TES is discharged producing power in the "peaking" turbine generator. It might appear that such an operation makes the low cost coal energy available to serve the peak load. A study of Figure 5-4, however, shows that when the coal unit has reduced its output to permit charging the thermal storage reservoir, the effect is to impose an additional load on the remainder of the generating system so that the same higher cost generating units must go into service during the hours from midnight to 8:00 AM as was the case with the general storage of Figure 5-2. Similarly, during the hours from 1:00 to 7:00 PM the discharge of the storage reservoir permits backing off generation on the oil units as in Figure 5-2. The fuel economics are the same because the fuel input to the TES plant (baseline coal plant plus storage equipment plus peaking turbine) is constant; and the only fuel consumption that changes with the operation of the storage units is that of the higher cost fossil coal units and the oil-fired units for peaking. The cost of energy going into storage is always measured by the production cost of the system generating units whose output is increased because energy is being stored.

Other Considerations

It has been shown above that the fuel economics of a storage system are a function only of the overall charge-discharge efficiency and the production costs of the existing generating system units whose operation will be changed by storage charging and discharging operations. The fact that the storage system is integrated with a very efficient low cost generating unit does not change this. The production cost examples of Figure 5-2 and 5-3 were purely illustrative; one can see how the fuel economics of storage would change with a change in production costs of existing generating units. For example, by looking ahead to some future year and supposing a generating system could be saturated with nuclear units up to 50 to 70% of the peak load, it would be possible to charge

the storage at very low nuclear production cost and discharge when relatively high production cost fossil units would otherwise have to operate. This could increase the fuel savings resulting from operation of the energy storage system. Similarly, an increase in overall storage efficiency above the .71 assumed in these examples would enhance the viability of storage systems.

Aside from the operating economics of storage systems, careful consideration should be given to their ability to meet the peak load. This is largely a function of the amount of storage provided and is best measured by the number of hours of energy available at full discharge rate. The required amount of storage cannot be selected merely on the basis of producing a ba anced design of a storage scheme. Nor can it be selected by simple reference to a load curve as in Figures 5-2 and 5-3. Consideration must be given to generating system emergencies (such as the loss of a major generating unit or heavily loaded incoming transmission line) and this may require several hours more storage than would be dictated by normal economic daily or even weekly operation. Pumped storage hydro is the only storage system which has had any appreciable application in the United States, and while some of these systems have storage as small as 6 hours, it is generally believed that 10 to 12 hours is a safer specification. The weighted average storage capacity for existing pumped storage plants is 9.5 hours.

In the case of dedicated storage, it is necessary to evaluate the generation system reliability impact of integrating the storage with a generating unit. When the generating unit which provides the energy to be stored is out of service for maintenance or because of a breakdown, the additional capacity of the storage discharge unit is also lost. This could result in a significant reduction in TES plant effective load carrying capability. These reliability and storage capacity issues will be discussed in more detail later in this section.

METHODOLOGY

Based on the plant capital cost estimates, TES system capital costs, levelized busbar energy costs and levelized annual costs determined in Task II, a utility system simulation analysis for production costing was made for the TES system showing the most potential by the Task II screening curves. The production costing results were used to calculate the TES system value to utilities as compared to cycling coal plants and gas turbine plants. Approximate value calculation methods were then used to evaluate the three TES systems that showed lesser potential in Task II. The sensitivity of the TES system values to the relative prices of oil and coal was determined. The reduction in the oil consumption by utilities as a function of TES system market penetration was also determined.

A list of comparison criteria was established to qualitatively evaluate the non-economic benefits of the TES systems on utilities. These qualitative benefits were reviewed in order to present a complete definition of the TES system for use by utilities in determining total system benefits.

ECONOMIC EVALUATION

Background

There is general agreement that the correct criterion for the economic selection of a generating unit is that its cost, when combined with those of other generating units making up a total electric utility generating system, should result in minimum cost of electricity. The established method of checking this criterion is to simulate the total utility system cost over a period of time which represents a major fraction of the life of the unit being considered. The first step in this process is to define alternate expansions of the system capacity which will have equal reliability in serving the forecasted load. Annual production costs (fuel, operation and maintenance) are determined by detailed simulation methods. To these costs are added annual fixed charges on investment, giving total annual revenue requirements. The expansion having lowest present worth of revenue requirements is the economic choice. In this method it is not

necessary to make any assumptions about the operation of the unit in question, that being determined by the simulation process. Although the procedures of total utility system cost analysis have been understood and applied for many years, they tend to be complex, sometimes costly to use, and time consuming. There is thus a natural tendency to use short-cuts or approximate methods, at least in preliminary analyses.

Busbar Costs

The most common and obvious of these approximate methods is to calculate unit generation cost, sometimes called "busbar energy cost". The process is disarmingly simple: calculate the annual fixed charges on the unit's investment, the annual fuel costs at full load heat rate and some capacity factor, estimate the annual operation and maintenance costs, and divide by the kilowatt-hours generated. It can be done for any kind of generating unit from a solar power satellite to a gas turbine. But the resulting ratio, mills/kWh, is of no value in comparing alternative generating units unless the following criteria hold true:

1. All alternative generating units have the requisite ability to start, stop, and follow the utility load curve.

2. All alternative units will have the same impact on the system requirement for reserve capacity, i.e., their combination of unit size, maintenance time, and forced outage rate produces equal effective capacity as determined by probabilistic analyses.

3. Each alternative unit will operate on the utility system at the same capacity factor throughout its lifetime. For this to be true, each must have sufficient operating flexibility, a similar economic characteristic with respect to unit commitment, and equal incremental fuel, operation, and maintenance costs throughout its lifetime.

The above criteria, if strictly applied, would make it impossible to use busbar cost. However, for units whose characteristics are known to be reasonably similar, unit generation cost can be helpful in preliminary analyses. But when generating sources of widely different characteristics, such as, for example, wind power and coal power plants, unit generation

cost comparisons can be very misleading. Storage units, even more than conventional generating units, cannot adequately be considered or appraised outside the framework of existing generating systems and loads which they serve. Storage plants do not have the same operating flexibility as conventional plants because the amount of storage capacity limits the number of hours of available energy. This limited energy characteristic could influence a storage unit's ability to serve peak loads in emergencies. In the case of dedicated energy storage, such as TES, it is necessary to consider the reliability impacts associated with integrating storage with a specific generating unit. In this case the peaking capacity associated with the TES plant is lost whenever the companion generating unit is out of service for maintenance or because of a breakdown.

Other considerations influence the credibility of busbar costs comparison even with fossil fuel generation alternatives of assured availability. It is not correct to assume, for example, that because a generating device has very high efficiency it will automatically be a "baseload unit" and operate continuously at high capacity factor. If its fuel supply is coal or oil, its commitment and dispatch economics may be such as to force it to operate as a mid-range unit, because nuclear units, with lower fuel costs of generation, capture the highest capacity factor roles. Further, the high efficiency fossil fired unit may not be operationally suitable for the mid-range position dictated by its fuel cost of generation. The importance of operational flexibility in assessment of advanced energy conversion and storage plants is discussed in detail in Reference 5-2.

Single Year Simulation Approach

The only safe way of making rational comparisons among generating units of widely varying characteristics is to make the total system cost comparison using the well established methods. In this study an approximate technique based on the total system cost approach was used

to assess the performance of TES plants. The same technique was also utilized in two EPRI studies (References 5-3 and 5-4) concerning requirements assessment of wind and photovoltaic power plants. The approximate method considers total system costs over the plant's entire lifetime but it requires only one yearly production cost simulation (two in some situations). For preliminary studies, it is not necessary to perform detailed production cost studies, year-by-year for time periods of 20-30 years. The most that is required with the approximate simulation approach is a two year snapshot, one at the beginning of the period of interest, the other at the end.

In using this approximate simulation approach, it is not necessary to make any assumptions about the operation of individual units in the generating system. Startup and shutdown ability, minimum output requirements, part load net heat rates, and operational flexibility of generating units are all modelled in the production cost simulation. The detailed one year simulation assures a realistic representation of the operation of the generating system, including unit commitment and incremental dispatch. The effect of future fuel and O&M cost inflation is included by using present worth levelized equivalent costs as discussed in earlier Sections.

Value Analysis Procedure

The primary objective of the value analysis procedure is to determine the value of Thermal Energy Storage in electric utility systems. Total value represents what utilities will pay for TES plants. For TES to be economically viable, TES value must be greater than or equal to TES plant cost. Total value is synonymous with the term "break-even cost" used in many engineering economic studies. In this study total value was determined by assessing the total utility system economic implications of TES in the context of representative electric utility systems as discussed above.

Electric Utility Systems. Past experience with pumped storage hydro applications has indicated that the value of energy storage depends strongly upon the characteristics of the utility systems to which they are applied.

As a result, three distinct electric utility systems were selected to conduct the TES value analysis. The characteristics of the three utility systems are identified in Table 5-1. The first utility system is EPRI Synthetic Utility System D expanded to the year 1990 (Reference 5-5). As shown in Table 5-1, 15% of the installed capacity in System D is gas turbines. In this particular utility system, TES systems could be used in place of some or all of the gas turbines to serve peak loads. The value of TES in System D would then be determined based on changes in total utility system costs which result when TES systems are substituted for gas turbine units. Of course, some changes in coal or nuclear installed capacity would also be necessary to accommodate the baseline plants into which TES systems are integrated. The actual substitution process is discussed later in this section.

Table 5-1

1990 GENERATION MIX FOR THREE UTILITIES

	Utility D*		Utility X		Utility Y	
Type	Installed Capacity (MW)	%	Installed Capacity (MW)	%	Installed Capacity (MW)	%
Nuclear	3600	27	3600	27	3600	27
Coal	5200	39	5200	39	6000	45
Oil-Steam	2600	19	2600	19	0	0
Cycling Coal	0	0	800	6	3400	25
Gas Turbine	2050	15	1250	9	450	3
	13450	100	13450	100	13450	100

* Note: EPRI Synthetic Utility System D

In light of the present uncertainties concerning the availability of oil for utility applications, the decision was made to also consider cycling coal plants for peaking applications. It should be pointed out that, presently, cycling coal plants are not competitive with gas turbines at less than 1000 full load hours of operation per year. However, if oil is not available for gas turbines, utilities may purchase other types of generation, such as cycling coal plants, for peaking applications. The Fuel Use Act, as it now stands, allows new gas turbine additions limited to no more than 1500 full load hours of operation (system average) per year. Other future options which must be considered are gas turbines burning synthetic liquids. It should be noted that several recent studies indicate that gas turbines and combined cycle power plants burning coal based liquid or gaseous fuels are promising options for the future.

Two utility systems which utilize cycling coal plants for peaking duty are characterized in Table 5-1. Utility System X was derived from EPRI System D by replacing 800 MW of gas turbines with 800 MW of cycling coal plants. Utility System Y was derived from EPRI System D by converting 1800 of the 2600 MW of oil-fired steam capacity plus 1600 MW of gas turbines to cycling coal plants. The remaining 800 MW of oil-fired steam capacity was converted to baseload coal capacity. The resulting Utility System Y, shown in Table 5-1, is predominantly a coal fired system (70% coal-fired capacity) with a small amount (3%) of peaking gas turbines. Although Utility System Y was arbitrarily synthesized starting with Utility System D, the System Y mix is not unlike several coal fired utility systems in operation today; for example, the American Electric Power System.

Baseline Economic Factors. Economic factors appropriate to investor-owned utilities were used as a baseline for the value assessment of TES systems. The economic factors utilized are consistent with the EPRI "Technical Assessment Guide" (Reference 5-6). The key economic factors are:

- Fixed Charge Rate - 18%
- Present Worth Interest Rate - 10%
- General Inflation Rate - 6%
- Economic Life - 30 years (all technologies)
- Fuel Costs - as given in EPRI "Technical Assessment Guide", June 1978 (Reference 5-6)

The general inflation rate includes both general monetary inflation and technological or other effects on price level. It is applied to all costs - capital, fuel, and O&M. In addition, fuel costs are influenced by real escalation as shown in Table 5-2. The fuel cost data shown in Table 5-2 are based on the Northeast region as specified in the EPRI Technical Assessment Guide.

Table 5-2

1990 FUEL COSTS PER EPRI TAG DOCUMENT
(1976$)

Fuel Type	Fuel Cost ($/MBtu)	Real Escalation (1990-2020)	Levelizing Factor (1990-2020)	Levelized Fuel Cost ($/MBtu)
Coal	1.04	0.7%	2.07	2.15
Oil	3.19	1.02%	2.15	6.87
Nuclear	0.66	2.0%	2.46	1.63
Synthetic Liquids	4.06	0.1%	1.91	7.76

NOTE: Levelized fuel cost may differ slightly from the product of 1990 fuel cost and levelizing factor because of round-off.

Case Study Comparisons. The value analysis procedure consisted of five distinct steps for each utility system considered:

1. Base Case Utility System. A base-case with conventional power plants was defined and the total utility system costs (system revenue requirements) were determined. A detailed production cost simulation was performed for a single year to calculate system fuel and O&M costs. The base case was utilized as a reference for subsequent TES substitution cases.

2. Substitute TES Plants for Conventional Generating Units. One or more TES plants were substituted for conventional generating units in such quantity to maintain the same percent reserve as the base case. Several substitution cases were developed to evaluate the impact of TES penetration on value. For each substitution case, system production costs (fuel plus O&M) were determined via simulation and system fixed charges on capital investment determined. The generation system reliability impacts associated with substitution of TES plants for conventional generating units are addressed in Step 4.

   Figure 5-5 shows the output power profile for TES Plant #2. As indicated, the output of the baseline nonreheat high sulfur coal plant during normal operations is 751 MW when operated at 2½ in. Hg backpressure (Table 4-7). The peaking capacity of the TES system is 397 MW. To illustrate the substitution process, it is useful to consider the three generation configurations shown in Figure 5-6. Each configuration has the capability to follow the power profile established in Figure 5-5. The actual dispatch in a utility specific production cost simulation will not be the same as shown in Figure 5-6. Figure 5-6 is presented only to facilitate discussion of the substitution process. The first configuration is simply the output power profile for TES Plant #2, shown in Figure 5-5. The second configuration is a combination of gas turbines and a reheat high sulfur coal plant. The third is a combination of a cycling coal plant and a reheat high sulfur coal plant. As TES Plant #2 is added to a utility system, it displaces conventional generating capacity. Comparison of the three configurations in Figure 5-6 indicates that the substitution process can be viewed as the TES system displacing peaking capacity, either gas turbines or cycling coal plants, and the nonreheat coal plant displacing a reheat coal plant of the same capacity.

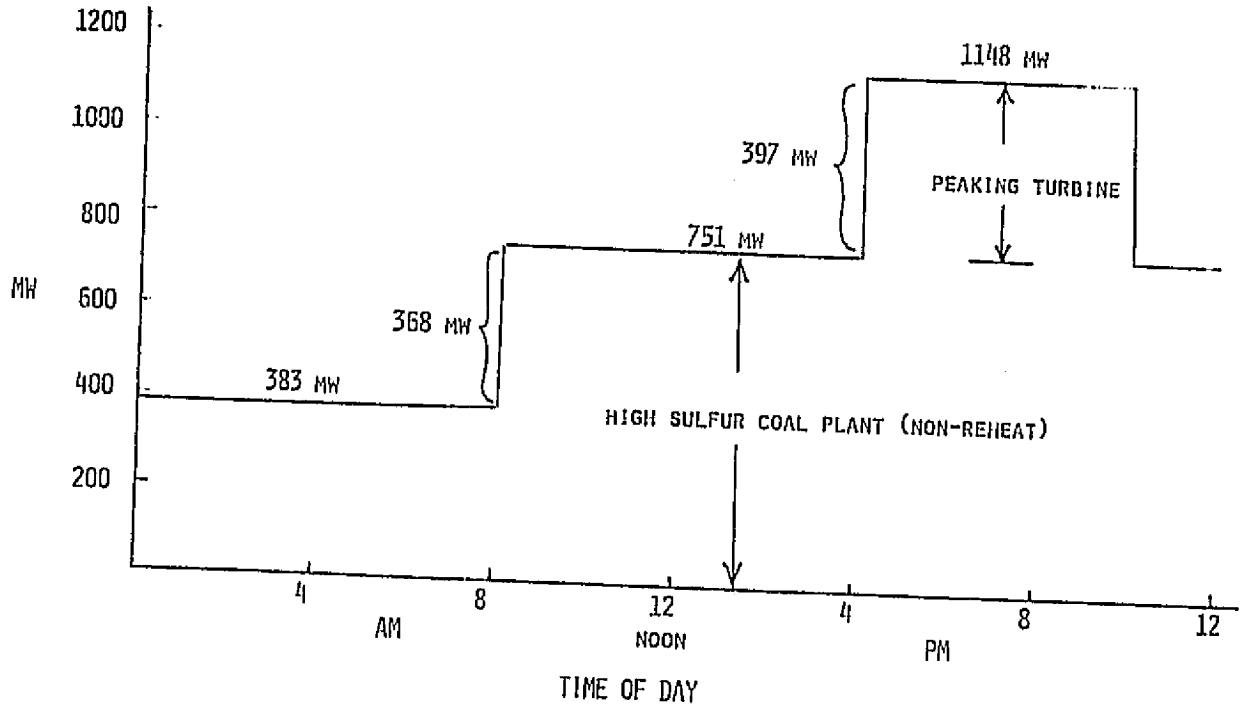

Figure 5-5. Output Power Profile for TES Plant #2

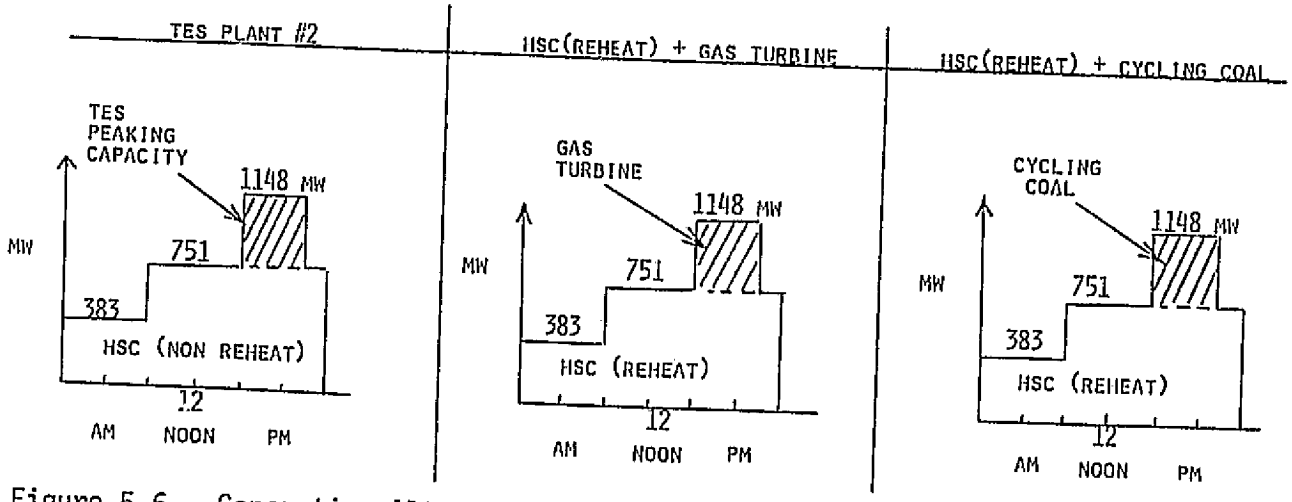

Figure 5-6. Generation Alternatives

3. Compare Total System Costs for the Base Case and Each Substitution Case. The comparison of the base case and the substitution cases is based on the single year results. The single year results reflect the impact of fuel cost inflation over a 30 year time period since levelized fuel costs were used. The levelized fuel costs are the present worth equivalent of actual fuel costs escalating through time. Although more realistic results might have been obtained by performing production cost runs for 30 years into the future, this was not done because the current procedure (single year simulation) was considered adequate for this exploratory study.

4. Reliability Analysis to Determine TES Effective Load Carrying Capability. The substitutions described in Step 2 were performed on the basis of rated capacity. For example, when a single TES Plant #2 (751 MW baseline nonreheat coal fired plant plus a 397 MW TES system = 1148 MW) was added to Utility System D, 1148 MW of conventional capacity (751 MW of reheat coal plant and 397 MW of gas turbines) was displaced. Actually the 397 MW of TES peaking capacity has less effective load capability than the 397 MW of gas turbines because of limited energy (6 hour storage capacity) of the TES system and the fact that it is attached to and dependent on the baseline nonreheat coal plant. During this step a reliability analysis was performed to evaluate the dollar penalty associated with the TES system's lower effective capability.

5. Sensitivity Analysis. In order to recognize uncertainties concerning future fuel costs, sensitivity analyses were performed to determine the impact of fuel costs on TES value to the utility.

TES PLANT Value Calculation

The economic value of TES plants in a specific utility system is determined via the previously described five step procedure. TES plant value calculation is based on total utility system costs (revenue requirements) which include utility system production costs (fuel and O&M costs) and fixed charges on investment.

Thus the total utility system costs or annual revenue requirements are equal to the annual charges for the capital cost plus the annual fuel and O&M as determined by production cost simulation.

If TES plant costs are such that the annual revenue requirements for the TES plant substitution case are less than or equal to the base case, the TES plant is economically viable. The annual value of TES to

a utility is the value of the annual revenue requirements for capital for the TES plant, R_C^{TES}, which when added to the annual fuel and O&M costs for the utility is equal to the annual revenue requirements for capital for the base plant displaced by TES plus the annual fuel and O&M costs for the utility incorporating the base plant.

That is,

$$V_P^{TES} + R_E^{TES} = R_C^B + R_E^B$$

or

$$V_P^{TES} = R_C^B + R_E^B - R_E^{TES}$$

where

V_P^{TES} = annual value of TES to utility

R_C^B = annual revenue requirements for capital for base plant displaced by TES

R_C^{TES} = annual revenue requirements for capital for the TES plant

R_E^B = annual revenue requirements for fuel and O&M for the utility incorporating the base plant

and

R_E^{TES} = annual revenue requirements for fuel and O&M for the utility incorporating the TES plant

All values are on an annual basis (\$/yr or \$/kW·yr). The value of the TES plant, V_P^{TES}, can be divided into two components - a capacity value, R_C^B, and an energy value, $R_E^B - R_E^{TES}$, which is a saving to the utility in annual fuel and O&M costs.

The above plant value, V_P^{TES}, represents a uniform annual series of revenue requirement savings. This can be converted to an equivalent plant capital value, C_{VP}, by dividing by the levelized fixed charge rate, FCR, giving a total value ($ or $/kW); i.e.,

$$C_{VP} = V_P^{TES}/FCR$$

TES SYSTEM Value Calculation

The TES plant value described above yields the total value for a given TES plant which includes a TES system and the baseline plant into which the TES system is integrated. The TES plant value can be compared to TES plant costs. These costs in both millions of dollars and dollars per kilowatt are shown in Table 5-3 which is an expansion of Table 4-31 developed in the previous section. Another value of interest is the TES system value. The TES system is defined as the aggregation of components for thermal energy storage including the storage media, the containment, heat exchangers and pipes for energy conversion and transport, the peaking Turbine Island to convert the stored energy to electricity and any other changes that must be made to a conventional plant to incorporate TES. The TES system is thus the TES plant minus the reference plant, which is the source of thermal energy for storage, before any changes are made.

It is important to note that TES system cost is defined as the difference between the total TES plant cost and the original reference plant cost as defined in Section 3. The reference plant is the base plant before modification as required to include the TES system. The reference plant modified to incorporate TES (but without the TES added) is termed the baseline plant. For this analysis the costs associated with the modification of the reference plant are considered part of the TES system cost. These modification costs represent the cost of integrating a TES system into a reference plant.

Table 5-3

PLANT COST COMPARISONS
(1976$)

DESCRIPTION	COST IN MILLIONS OF DOLLARS			COST IN $/kW		
	Direct Cost	Base Cost	TOTAL Investment Cost	Direct Cost	Base Cost	TOTAL Investment Cost
NUREG 0244, HSC Plant (794,415 kW)	275.05	335.24	594.05	346.23	422.00	747.78
NUREG Modified, HSC Plant (741,000 kW)	264.10	321.89	570.39	356.40	434.40	769.75
Nonreheat, HSC Base Plant (741,633 kW)	302.87	366.15	648.82	408.38	493.71	874.85
NUREG 0241, Nuclear LWR Plant (1,138,610 kW)	420.96	568.83	894.20	369.71	499.58	785.34
Nuclear LWR Base Plant (1,072,573 kw)	404.00	545.84	858.06	376.67	508.91	800.00
TES HSC Plant #1A (1,125,332 kW)	404.92	484.13	857.88	359.82	430.21	762.34
TES HSC Plant #1B (1,125,332 kW)	415.56	496.86	880.43	369.28	441.52	782.37
TES HSC Plant #1C (1,125,332 kW)	433.32	518.09	918.05	385.06	460.39	815.81
TES HSC Plant #2 (1,147,996 kW)	392.17	479.72	850.07	341.61	417.88	740.48
TES Nuclear LWR Plant #3 (1,220,758 kW)	522.84	700.35	1100.95	428.29	573.70	901.85
TES Nuclear LWR Plant #4A (1,222,869 kW)	483.61	647.11	1017.26	395.47	529.18	831.87
TES Nuclear LWR Plant #4B (1,222,869 kW)	486.52	650.88	1023.19	397.85	532.26	836.71
TES Nuclear LWR Plant #4C (1,222,869 kW)	490.96	656.82	1032.63	401.48	537.12	844.35
Cycling Coal Fired Plant (511,500 kW) (1800 psig/950°F/950°F)	176.25	214.82	380.67	344.58	419.99	744.22
Cycling Coal Fired Plant (511,500 kW) (2400 psig/1000°F/1000°F)	207.67	253.12	448.52	406.00	494.85	876.87

As with TES plant value to a utility, V_P^{TES}, the TES system value, V_S^{TES}, can be divided into a capacity value and an energy value. The energy value, or saving to the utility in annual fuel and O&M cost, is the same as that for the plant,

$$V_E^{TES} = R_E^B - R_E^{TES}$$

The capacity value, V_C^{TES}, is now

$$V_C^{TES} = R_C^p$$

where

R_C^p = annual revenue requirements for capital for peaking capacity displaced by TES. R_C^p is equal to the plant capacity value less the displaced reference plant cost. All values are on an annual basis (\$/yr or \$/kW·yr). As before, the annual system value, V_S^{TES}, can be converted to an equivalent system capital value, C_{VS}, by dividing by the levelized fixed charge rate, FCR; i.e.,

$$C_{VS} = V_S^{TES}/FCR$$

If TES plant costs or TES system costs are less than C_{VP} and C_{VS}, respectively, TES is economically viable in the utility system under consideration.

Reliability Analysis to Determine TES Plant Effective Capability

This reliability analysis is step 4 in the value analysis procedure identified earlier. Generating plant effective load carrying capability (effective capability) is defined as the amount of additional utility system load which can be served as the result of installing the plant.

The concept of effective capability is described in detail in Reference 5-7. The effective capability of a TES plant is less than that of the displaced conventional generating equipment because: (1) the TES system is dedicated to the baseline plant, and (2) the TES system has limited energy capability. Because of its dedicated nature, the TES system is out of service whenever the baseline plant is off-line due to planned maintenance or outage, in addition to the time when it may be off-line due to its own planned maintenance or outage.

The impact of the dedicated TES design on effective capability can be evaluated using a probabilistic analysis which considers the possible outage states. A simplified schematic comparing the effective capability of TES Plant #2 with a conventional HSC baseload plant plus a cycling coal plant is shown in Figure 5-7. The forced outage rates (FOR) shown for the baseline plant are based on EEI data (Reference 5-8) for large coal units. Note that for the baseline plant the boiler forced outage rate is larger than that for the turbine-generator. Since forced outage rates for TES systems have not yet been established, it is assumed in this example that the TES system FOR would be equal to that for advanced gas turbines (7.9%) as specified in the EPRI Technical Assessment Guide (Reference 5-6). While there is no good basis for the 7.9% FOR it is not inconsistent with EEI forced outage data for small (300-399 MW) fossil units (Reference 5-8).

The results of the outage probability calculations are summarized in Table 5-4. The deficiency shown in the two right-hand columns must be made up to assure equal generation system reliability for the TES substitution case to equal the gas turbine or cycling coal base cases. If the deficiency is made up with gas turbine peaking capacity, the penalty (negative value adjustment) is determined by the following relationship:

$$\Delta_1 = \frac{\Delta P_1 \times C_{PK} \times FCR}{1 - r_p}$$

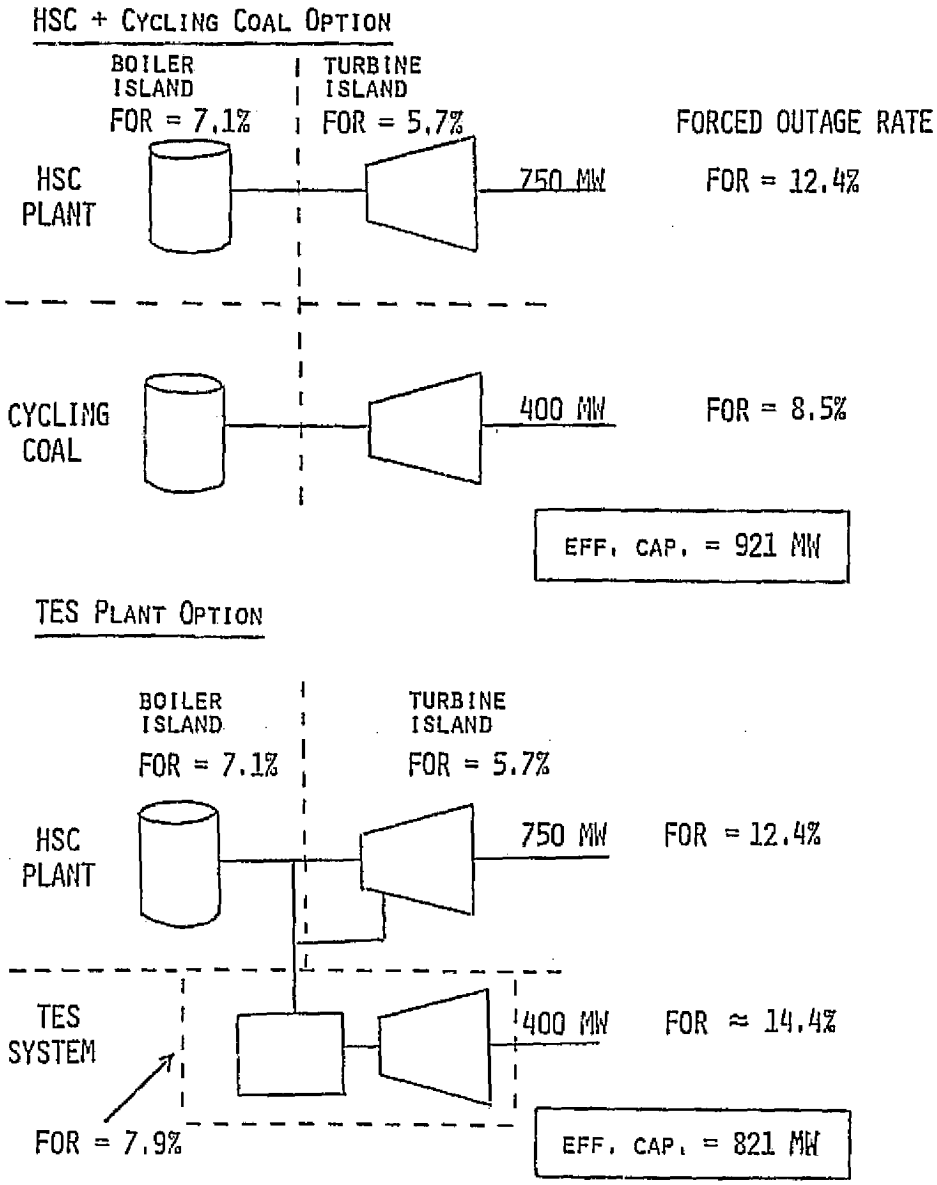

Figure 5-7. Effective Capability Analysis Schematic Diagrams

where:

Δ_1 = dedicated plant TES penalty, \$/yr per plant

ΔP_1 = deficiency because of effective capability difference, kW

C_{PK} = cost of gas turbine peaking capacity, \$/kW

FCR = Fixed Charge Rate

r_p = peaking capacity forced outage rate, fraction.

Table 5-4

EFFECTIVE CAPABILITY FOR TES PLANTS & ALTERNATIVES

TES Plant #	Installed Capacity (MW)	Effective Capability (MW)			Deficiency (MW)	
		TES Plant	Reference Plant + Gas Turbine	Reference Plant + Cycling Coal	Vs. G.T.	Vs. Cyc. Coal
1	1125	803	916	901	113	98
2	1150	821	937	921	116	101
3	1220	924	956	950	32	26
4	1220	924	956	950	32	26

Assumptions

1. Gas Turbine FOR = 7.9%
2. Cycling Coal FOR = 8.5%
3. HSC Coal Plant FOR = 12.4%
   - Boiler FOR = 7.1%
   - Turbine Gen. FOR = 5.7%
4. TES System (Storage + Peaking Turbine) FOR = 7.9%

The second TES system characteristic which influences effective capability is the TES system's limited energy capacity. If the storage capacity (measured in hours at rated discharge power) is not large enough to make the plant's capacity available for any credible emergency, the TES plant must be assigned an additional penalty (negative value adjustment) compared to other type plants that could be available for an unlimited time. Hourly loss of load calculations performed on several utility systems have resulted in the effective capacity curves shown in Figure 5-8. Since the curves shown are based on energy storage units with zero forced outage rates, they illustrate the impact of limited energy exclusively. Based on these results, the effective capability of a six hour TES plant for any penetration level is assumed to be 67% as shown by the circle. The associated annual dollar penalty ($/yr) is given by:

$$\Delta_2 = \frac{\Delta P_2 \ (1 - 0.67) \times C_{PK} \times FCR}{1 - r_p}$$

where, in addition:

Δ_2 = limited energy TES penalty, $/yr per plant

and

ΔP_2 = TES plant peaking capacity, kW

The total annual penalty due to TES plant effective capability deficiencies in $/yr per plant is, therefore,

$$\Delta V_{TS} = \Delta_1 + \Delta_2$$

$$= \frac{C_{PK} \times FCR}{1 - r_p} \left[\Delta P_1 + \Delta P_2 \ (1 - 0.67)\right]$$

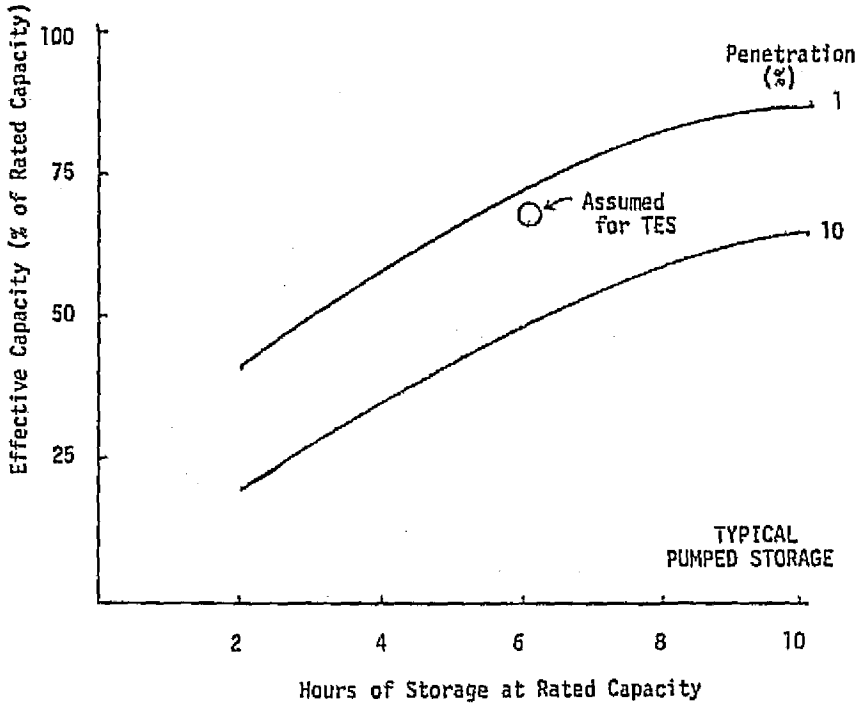

Figure 5-8. Effective Capacity of Energy Storage

The annual penalty can be converted to an equivalent capital penalty, ΔC_{VTS}, by dividing by the levelized fixed charge rate, FCR; i.e.,

$$\Delta C_{VTS} = \Delta V_{TS}/FCR$$

The capital value, C_{VS}, adjusted for the effective capacity penalty, ΔC_{VTS}, is

$$C'_{VS} = C_{VS} - \Delta C_{VTS}$$

Illustrative Cost/Value Calculations

The following example is presented to illustrate the cost/value analysis of TES Plant #2 in EPRI Utility System D. Of the four TES plants considered in Section 4, TES Plant #2 had the lowest busbar costs.

Figure 5-9 illustrates the base case generation mix and the TES substitution case generation mix. In this example, when two TES plants (2296 MW) were added to EPRI Utility D, the following conventional capacity was displaced (see Figure 5-6): 1502 MW of reheat coal plants (reference plants) and 794 MW of gas turbines. The impact on equipment costs resulting from the substitution of two TES plants in Utility D is shown in Figure 5-10. The TES Plant #2 costs shown in Figure 5-10 were obtained from Table 5-3. All costs are based on 1976 dollars. The costs of the displaced capacity were calculated using unit costs for the reference coal plants (769.75 $/kW) obtained from Table 5-3 and for gas turbine plants obtained from the EPRI Technical Assessment Guide. The gas turbine costs were taken as 150 $/kW (in 1976$).

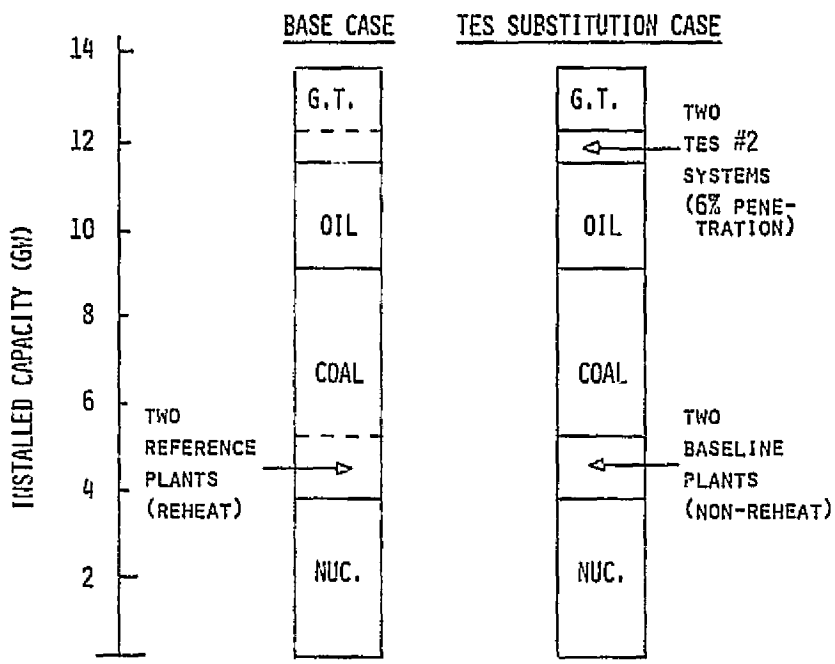

CAPACITY DISPLACED:

GAS TURBINES	794
REHEAT COAL PLANTS	1502
	2296 MW

CAPACITY ADDED:

TWO TES #2 PLANTS @ 1148 MW	2296 MW

Figure 5-9. EPRI Utility System D Base Case and TES Substitution Case

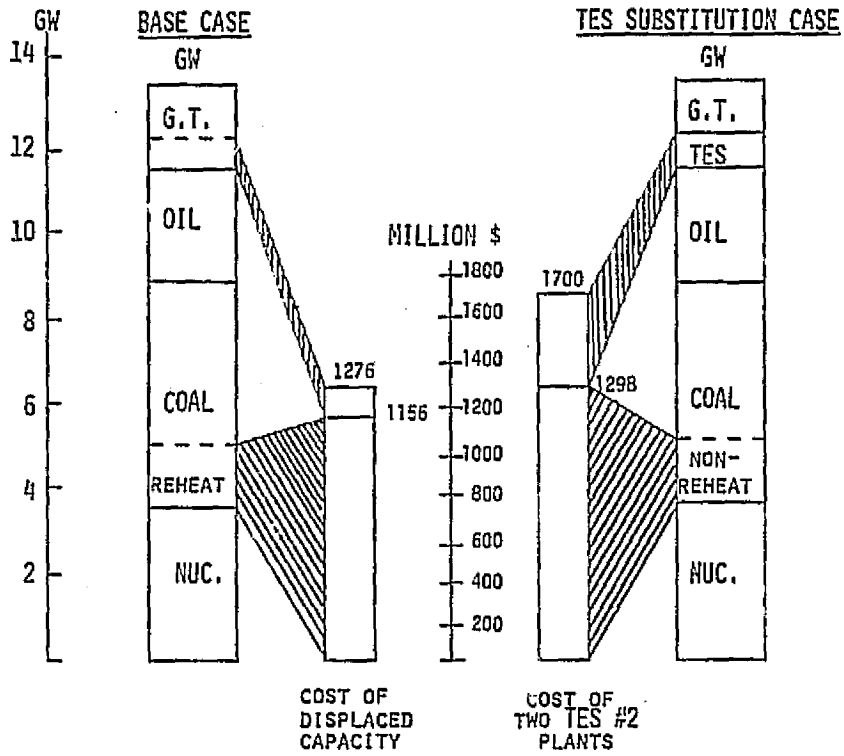

FIXED CHARGES ON PLANT ADDITIONS:

BASE CASE: $R_C^B = 1276 \times 0.18 = \$230$ MILLION/YR

TES CASE: $R_C^{TES} = 1700 \times 0.18 = \$306$ MILLION/YR

Figure 5-10. TES Plant #2 - Impact on Equipment Costs

The cost of the displaced reference baseload plants is 1502×10^3 (kW) x 769.75 (\$/kW) = 1156×10^6 (\$). The cost of the displaced peaking gas turbines is 794×10^3 (kW) x 150 (\$/kW) = 120×10^6 (\$). The annual capital costs are $(1156 + 120) \times 10^6 \times 0.18$ (FCR) = 230×10^6 (\$/yr). The annual capital cost of the two TES #2 plants is similarly obtained and is

2 (plants) x 1148×10^3 (kW) x 740.48 (\$/kW) x 0.18 (FCR) = 306×10^6 (\$/yr).

The single year production simulation runs give the costs for fuel and O&M for the entire Utility System D. For the base case and TES substitution case the results are:

Base Case, R_E^B $= 1670 \times 10^6$ (\$/yr)

TES Substitution Case, R_E^{TES}, $= 1624 \times 10^6$ (\$/yr)

The annual revenue requirements (ARR) for fuel and O&M (variable costs), R_E, plus new plant investment (fixed costs), R_C, for both the base case and the TES case are shown in Figure 5-11. It should be noted that the variable costs, R_E, are for the entire 13,450 MW of installed capacity of Utility System D, whereas the fixed costs, R_C, are shown only for the 2296 MW of displaced capacity. Any remaining fixed costs are the same for either the base case or TES substitution case. Comparison of the 1930×10^6 \$/yr for the TES case to the 1900×10^6 \$/yr for the base case indicates that at a total plant cost of $\$850 \times 10^6$ (740.48 \$/kW), TES Plant #2 is not viable.

The value of TES Plant #2 to a utility that could use gas turbines for peaking is:

$$V_P^{TES} = (230 + 1670 - 1624) \times 10^6 = 276 \times 10^6 \text{ (\$/yr)}$$

Of this 46×10^6 \$/yr is the energy value, $R_E^B - R_E^{TES}$, and 230×10^6 \$/yr is the capacity value, R_C^B. Converted to an equivalent plant capital value, C_{VP}, the result is $V_P^{TES}/FCR = 276 \times 10^6/0.18 = \$1534 \times 10^6$.

The total costs for two TES #2 plants (in million \$ from Figure 5-10) are compared to total value in Figure 5-12. Study of Figure 5-12 suggests that an incremental analysis may provide a better cost/value comparison. As indicated previously and shown in Figure 5-12, the cost of the two reheat reference plants is $\$1156 \times 10^6$. This is the minimum possible cost for the two baseline plants which are the source of energy

for TES. The actual cost of $1298 x 10^6 reflects some added costs associated with the nonreheat configuration. It may be possible in the future to develop new TES concepts utilizing a reheat cycle with baseline plant costs approaching the $1156 x 10^6 reference.

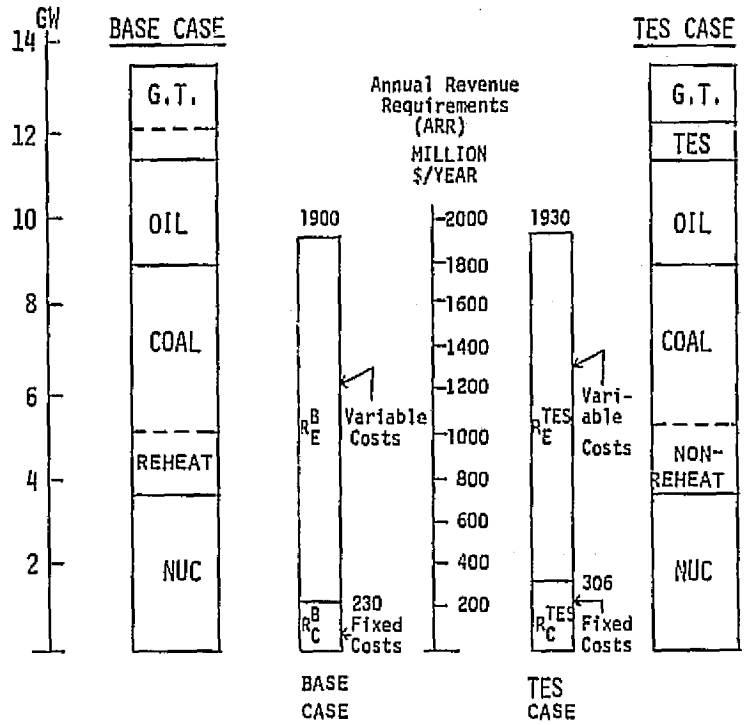

CONDITION FOR TES ECONOMIC VIABILITY:

$$R_C^{TES} + R_E^{TES} \leq R_C^B + R_E^B$$

TES PLANT VALUE:

$$V_P^{TES} = \underbrace{R_E^B - R_E^{TES}}_{\text{(ENERGY VALUE)}} + \underbrace{R_C^B}_{\text{(CAPACITY VALUE)}}$$

Figure 5-11. TES Plant #2 - Impact on Annual Revenue Requirements (EPRI Utility System D)

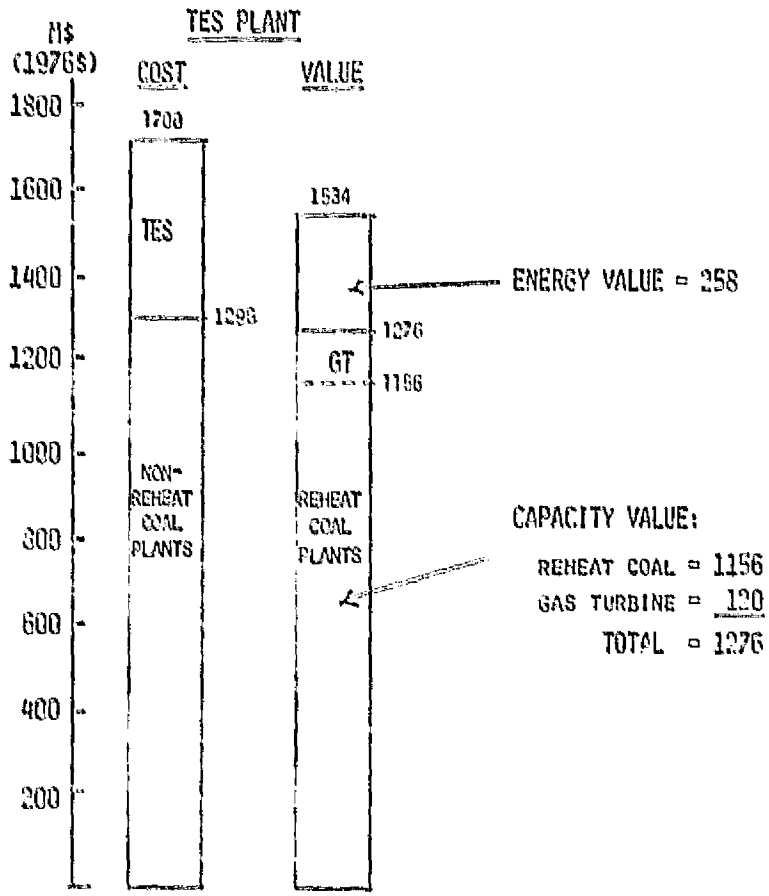

Figure 5-12. TES Plant #2 - Cost/Value Comparison (EPRI Utility D, 6% Penetration, 2 TES Plants @ 1148 MW)

In Figure 5-13 the TES system cost ($544 x 10^6) and value ($378 x 10^6) shown on the right for two systems can be obtained by subtracting $1156 x 10^6 from the plant cost and value shown in Figure 5-12 (and repeated on the left in 5-13). The results presented in Figure 5-13 illustrate that the TES plant analysis and the incremental TES system analysis are consistent. In both cases TES cost reductions of $166 x 10^6 ($83 x 10^6/TES system) are required to achieve economic viability, ignoring the reliability penalties.

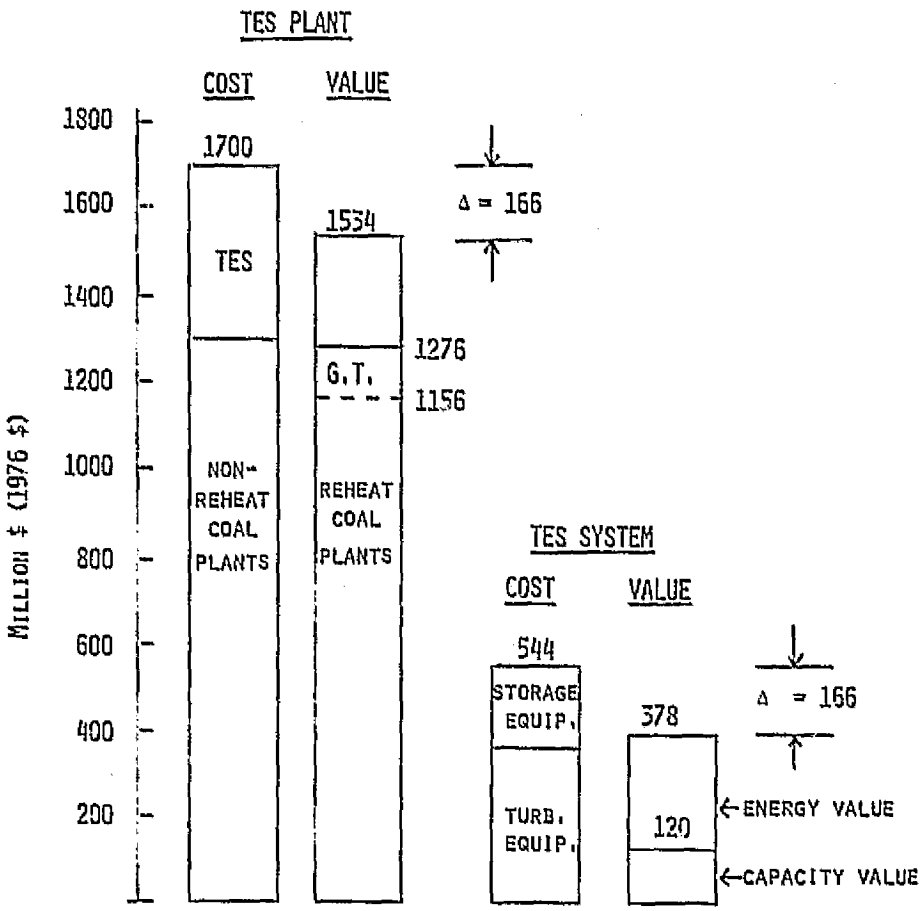

Figure 5-13. TES Plant #2 - Cost/Value Comparison (EPRI Utility System D, 6% Penetration, 2 TES Plants @ 1148 MW)

The cost penalty for two TES #2 systems for deficiencies in effective capability is simply twice the penalty for each system defined earlier; i.e.,

$$\Delta V_{TS} = 2 \times \frac{C_{PK} \times FCR}{1 - r_p} \left[\Delta P_1 + \Delta P_2 \, (1 - 0.67)\right]$$

$$= 2 \times \frac{150 \times 0.18}{1 - .079} \left[116 + 397 \, (1 - 0.67)\right] \times 10^3$$

$$\Delta V_{TS} = 14.5 \times 10^6 \ (\$/yr)$$

The capitalized cost penalty, ΔC_{VTS}, is $\$14.5 \times 10^6/0.18$ or $\$81 \times 10^6$ for two TES #2 systems. The adjusted capitalized value for two TES #2 systems is, therefore, $\$(378 - 81) \times 10^6$

or

$$C'_{VS} = \$297 \times 10^6$$

It is frequently desirable to express cost/value comparison results in terms of dollars per kilowatt (\$/kW). For example, the previous TES system value of $\$297 \times 10^6$ for two TES systems each rated at 397,000 kW yields a value of

$$C'_{VS} = \frac{297 \times 10^6}{2(397{,}000)} = 375 \text{ \$/kW}$$

The cost/value comparison in dollars per kilowatt for TES System #2 is shown in Figure 5-14. The TES value is also shown without the generation reliability penalty. On a dollar per kilowatt basis the system cost is $544 \times 10^6/2$ (397,000) or 685 \$/kW, the value without the reliability penalty is $378 \times 10^6/2$ (397,000) or 476 \$/kW, and the value with the reliability penalty is 375 \$/kW as shown above.

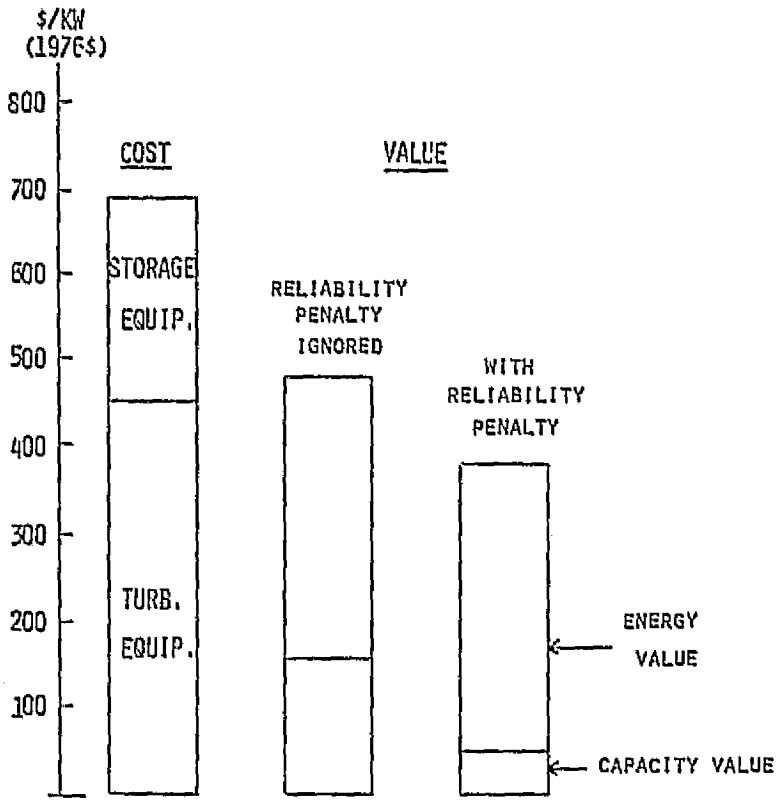

Figure 5-14. TES System #2 - Cost/Value Comparison (EPRI Utility System D, TES Versus Gas Turbines, 6% Penetration)

Cost/Value Comparison Results - TES System #2

The five step value analysis procedure described earlier and illustrated in Utility System D was utilized to determine the value of TES System #2 in all three utility systems identified in Table 5-1. The results are presented in Figure 5-15. In Utility D, TES System #2 was compared to gas turbines for peaking as in the illustration just completed. In Utilities X and Y, TES System #2 was compared to cycling coal plants for peaking. All value results shown in Figure 5-15 are for a 6% penetration (two TES plants @ 397 MW) of TES in the generation system.

TES value versus cycling coal is greater than TES value versus gas turbines because of a much larger capacity value. The capacity values shown in Figure 5-15 are the plant costs for the displaced peaking capacity - 150 $/kW for gas turbines and 744 $/kW for the cycling coal fired plant (No. 14, Table 5-3), minus the effective capacity penalty of 102 $/kW.

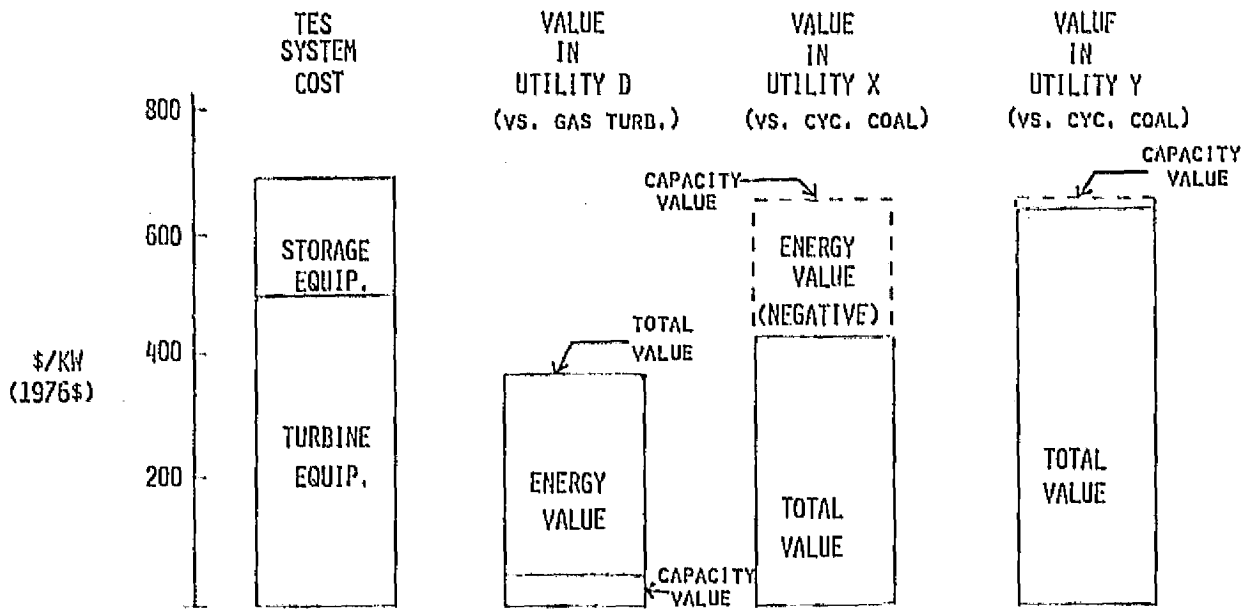

Figure 5-15. TES System #2 - Cost/Value Comparisons (6% Penetration)

As indicated in Figure 5-15, TES value versus cycling coal plants is very sensitive to the utility system involved. The reason is that cycling coal plants will run for much more than 1500 hours per year in many utility systems. This happened in Utility X. Since the cycling coal additions had lower power production costs than the existing oil-fired steam units, they were dispatched before the more expensive oil-fired units. In Utility X, the equivalent full load operating hours on the cycling coal plants were 2500 hours, significantly more than the

1500 hour total for the TES Plant #2. In Utility System Y, however, the equivalent full load operating hours for the cycling coal plants were close to 1500 hours.

Sensitivity analysis results indicated that a TES plant with 12 hours of storage, rather than 6 hours, would operate at 1900 equivalent full load hours. Both cost and value for 6 and 12 hours of capacity are compared in Figure 5-16 for TES System #2 versus gas turbines in Utility System D. Although the value increased nearly 100 $/kW, including effects of reliability, the cost increased nearly 200 $/kW because of the added storage capacity costs. Clearly there is a limit to the number of hours per day that a TES system can be discharged because of the time required for charging. Any significant shortening of the charging time presents operating and dispatch problems. Even when the storage capacity is doubled as in this case, the operating hours increased only 27% because the first six hours of storage levelized the loads to the point where off-peak and on-peak incremental cost differences are too small to justify significant additional storage operations.

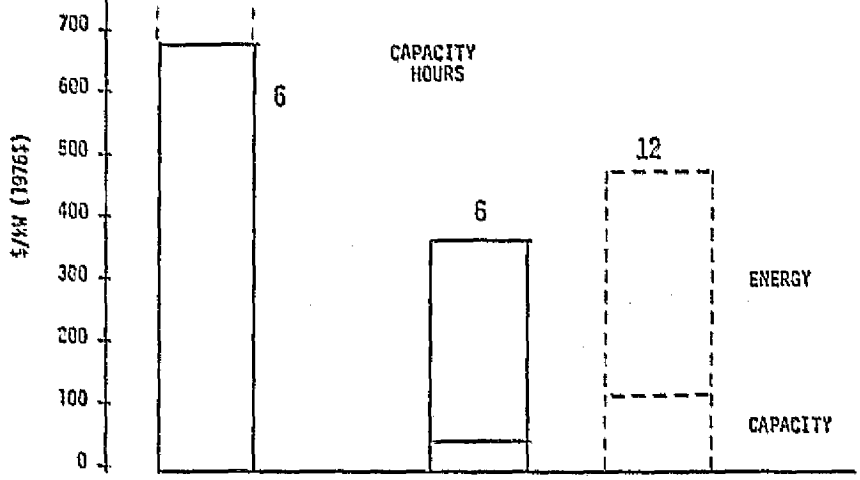

Figure 5-16. TES System #2 - Cost/Value Comparison with Increased Capacity (EPRI Utility System D, TES Versus Gas Turbines, 6% Penetration)

TES System #1A has a C_S value, or storage cost, that is about three-fourths that of System #2. It is expected, therefore, that it would be more beneficial to add more capacity to System #1A than #2. The C_p value, however, is higher for #1A so that it is not expected that #1A would improve sufficiently to make it better than #2. The fact that many pumped hydro sites have a storage capacity of greater than six hours can be attributed to the fact that the cost of additional storage capacity is lower.

The results shown in Figure 5-15 indicate that cost reductions of about 50% are necessary for TES System #2 to be competitive with gas turbines for peaking applications. The comparison of TES with cycling coal units in Utility Systems X and Y indicate that cost reductions as low as 10% (Utility Y) or as high as 40% (Utility X) could be required for TES to be economically viable. The value of TES versus cycling coal is very sensitive to the mix of generating units in a utility system.

The results presented in Figure 5-15 are for a penetration level of 6% or two 397 MW TES plants in utility systems with 13,450 MW of installed capacity. The results in Figure 5-17 show the impact of TES penetration level on TES system value. The value, in $/kW, drops significantly with penetration level which affects both the capacity value and the energy value. Energy value decreases with penetration because each successive TES plant addition is forced to operate on load curves which have been levelized by the previous plant. The opportunities for fuel cost savings decrease with penetration, as the loads are levelized. Because of this penetration effect, TES systems will tend to have less value in utility systems that have existing energy storage in the form of pumped storage or pondage hydropower.

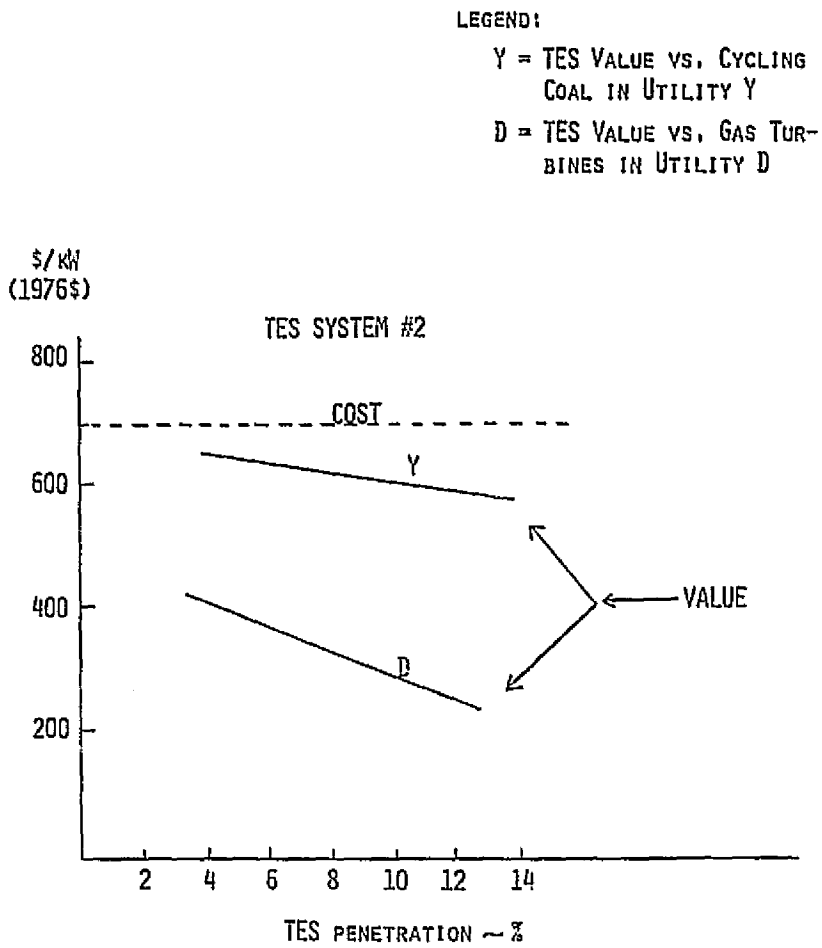

Figure 5-17. Impact of Penetration on TES System #2 Value

The previous results were all based on the fuel cost assumptions summarized in Table 5-2 (page 5-16). Sensitivity analyses were performed to evaluate the impact of changes in fuel costs on TES plant value using approximate techniques not requiring hour-by-hour production costing simulation. The results are presented in Figure 5-18, where for TES Plant #2 the TES cost is noted and the TES value is plotted as a function of levelized gas turbine oil cost. The fuel costs shown in Figure 5-18 are levelized for a 30 year time period. The results indicate that with levelized coal costs at 2.15 $/MBtu, levelized oil costs would have to be nearly 10 $/MBtu for TES Plant #2 to be economically viable. EPRI's estimated levelized cost of synthetic liquids

(7.76 $/MBtu) is noted on the abscissa but this cost raises the TES value only about one-third of the cost-value difference with a baseline levelized oil cost of 6.87 $/MBtu. It is important to note that the cost difference between charging fuel and peaking fuel determines TES value and not the cost ratio. As shown in Figure 5-18, a coal cost increase of 1.1 $/MBtu has the same impact as an oil cost decrease of 1.1 $/MBtu. Fuel cost sensitivity analyses for TES systems versus cycling coal units showed that TES versus cycling coal is quite insensitive to coal costs. This is not surprising since the majority of TES value versus cycling coal is capacity value which is independent of fuel costs.

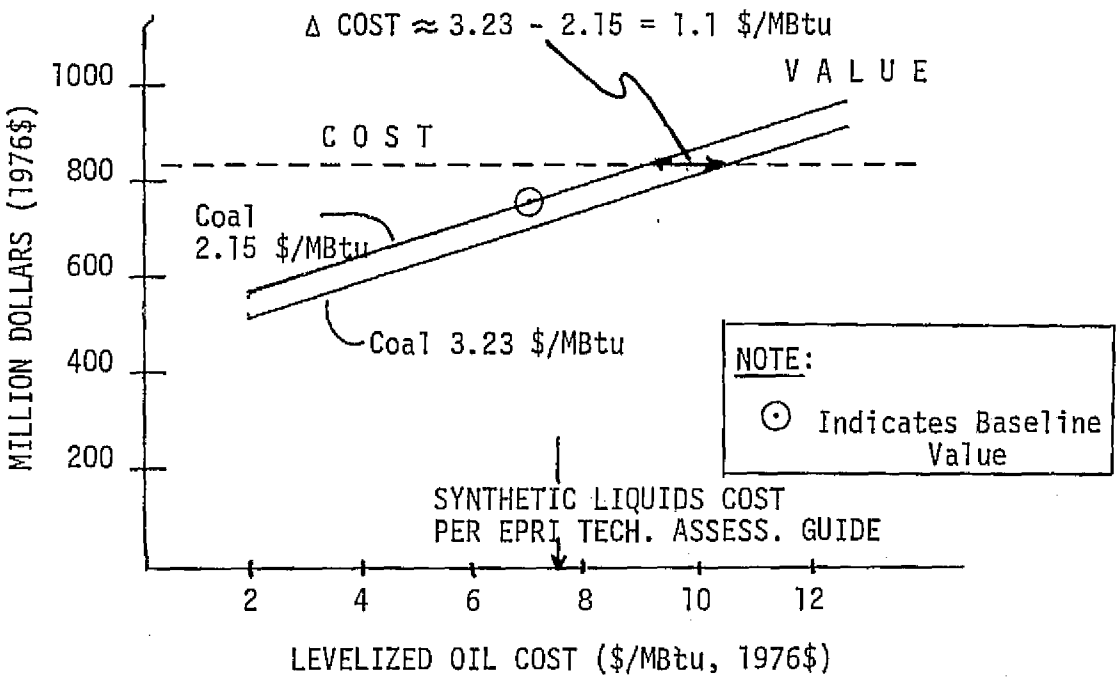

Figure 5-18. Impact of Gas Turbines Fuel Cost on TES Plant #2 Value

TES Impact on Fuel Consumption

One of the potential benefits of TES applications in electric utility systems is reduced consumption of oil. The hour-by-hour production cost simulations performed with Utility System D provide the necessary detailed fuel consumption data to determine the impact of TES on oil consumption. Annual fuel consumption for the 1990 EPRI Utility D is summarized in Figure 5-19. Fuel consumption, by fuel type, is expressed both in terms of Btu's (on the ordinate) and by actual fuel units (at the tops of the bars). As indicated, oil consumption is significantly reduced when TES systems are substituted for oil-fired gas turbines. At the same time, utility system coal consumption increases, as expected. It is interesting to note that with a 6% penetration of TES systems, the 1990 utility coal consumption increases only 13.3 x 10^{12} Btu while the oil consumption decreases 12.2 x 10^{12} Btu.

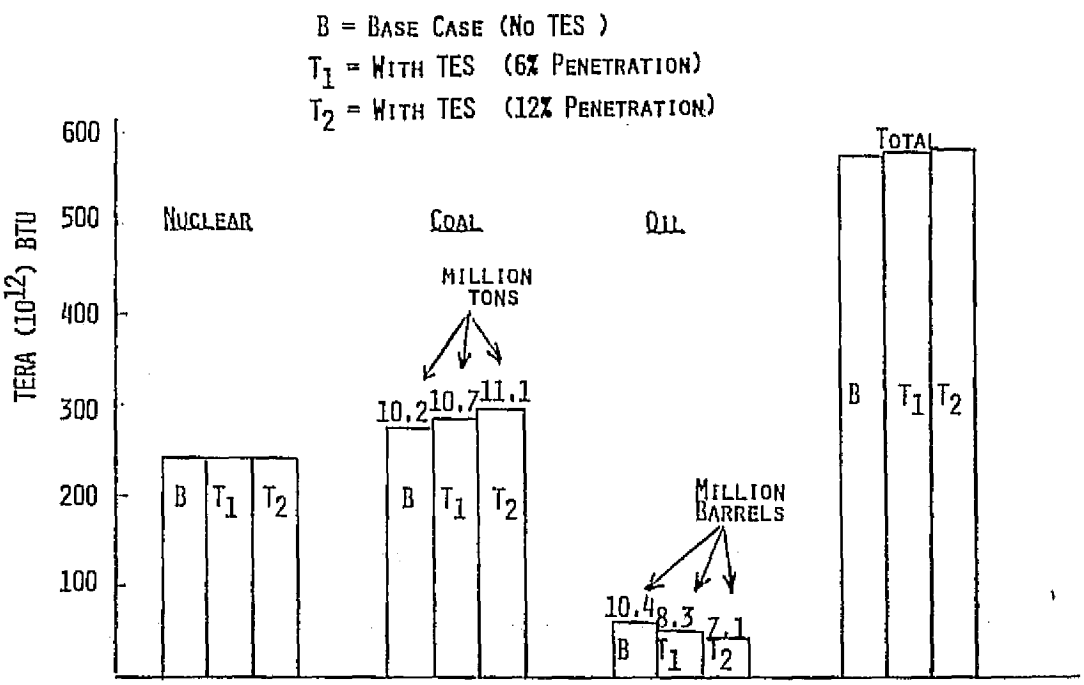

Figure 5-19. 1990 Fuel Consumption (EPRI Synthetic Utility System D)

The Figure 5-19 results are presented as a function of the penetration in Figure 5-20 (solid lines). The dashed lines in Figure 5-20 show the changes in fuel consumption which occur when cycling coal plants are substituted for gas turbines. In Utility System D, cycling coal plants reduce oil consumption even more than TES plants. The reason for this is that cycling coal plants do not have the storage losses incurred by TES and in addition they run about 2500 full load hours per year in Utility D. A 12% penetration (four TES plants) of TES #2 in Utility D reduces oil consumption 32% (3.3 million barrels per year); whereas a 12% penetration of cycling coal plants reduces steam oil consumption 52%.

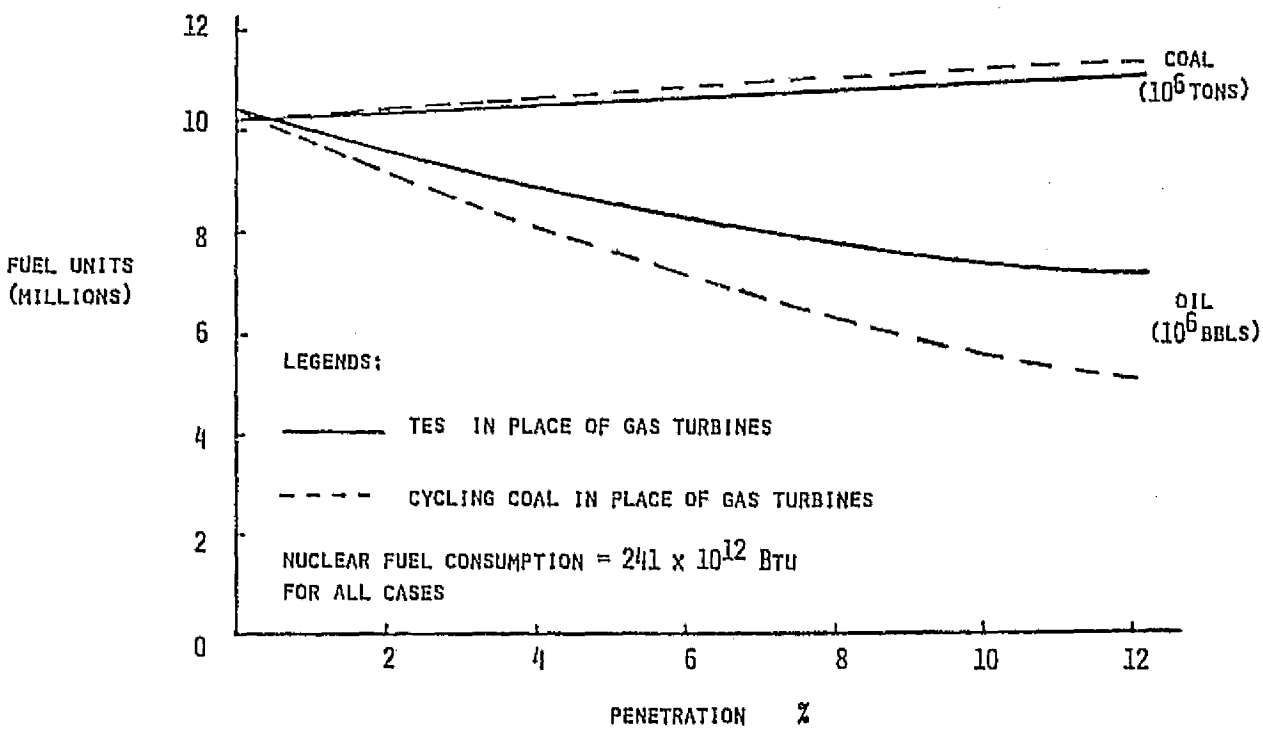

Figure 5-20. 1990 Fuel Consumption (EPRI Synthetic Utility System D)

Summary of Utility System Economic Evaluation

The evaluation of TES systems in three utility systems has led to the following principal conclusions:

- Cost reductions of 10-40% are required for TES systems to compete with cycling coal plants.
- TES system viability versus cycling coal plants is very sensitive to generation mix.
- Cost reductions of 40-50% are required for TES systems to compete with gas turbines at 1500 hours annual operation.
- TES System #2 is competitive with gas turbines, if the fuel cost difference (gas turbine fuel-coal) is greater than 3.6 $/MBtu (1976$).
- Four TES plants (12% penetration) installed in EPRI Utility System D reduce oil consumption 32% (3.3 million barrels per year).
- Cycling coal plants (12% penetration) installed in EPRI Utility System D reduce oil consumption 52%.

NON-ECONOMIC COMPARISONS

A listing of comparison criteria was compiled in order to qualitatively evaluate the non-economic benefits of the TES systems to the utilities. The listing was separated into two groupings of evaluation criteria. The first evaluation, Table 5-5, compares the four TES systems to each other in order to determine relative storage system advantages. This evaluation was complicated by the differences in peaking powers of the four TES systems. The second grouping, Table 5-6, was used in order to compare the four TES systems to cycling coal plants, representative of mid-range generating alternatives.

Table 5-5

EVALUATIONS OF TES SYSTEMS
(Relative to each other)

	Plant #1 HSC Oil/Rock Peaking Turbine	Plant #2 HSC Underground Peaking Turbine	Plant #3 LWR PCIV Feedwater Heating	Plant #4 LWR Oil/Rock Feedwater Heating
Siting	+	-	+	+
Construction Time	-	-	-	+
Environmental Intrusion Factors	-	-	+	-
R&D Required	-	-	+	-
Extent of Performance Certainty	-	-	+	-
Level of Cost Uncertainty	+	-	-	+
O&M Requirements	-	-	+	-
Regulatory Involvement	+	+	-	-
Materials Availability	+	+	-	+
Plant Safety Requirements	-	+	-	-
Availability/Forced Outage	-	-	+	+
Load Following Capability	+	+	-	-

Table 5-6

EVALUATION OF TES SYSTEMS
(Relative to Cycling Coal Plants)

	Plant #1 HSC Oil/Rock Peaking Turbine	Plant #2 HSC Underground Peaking Turbine	Plant #3 LWR PCIV Feedwater Heating	Plant #4 LWR Oil/Rock Feedwater Heating
Load Following Capability	+	+	-	-
"Warm" Start-Up Capability	+	+	+	+
Transient Stability	---------- Inconclusive ----------			
Maximum Capacity Factor	-	-	-	-
Start-Up Fuel	+	+	+	+

Significant items resulting from the two evaluations are described in the following comparison narrative.

Relative to Other TES Systems

Siting. The underground caverns of Plant #2 limit the applicability of the TES systems to those locations (approximately 30% of the United States land area) where suitable rock strata is near the ground surface. The remaining three TES system plants will slightly increase area of the overall plant. However, the amount and type of land required will not significantly impact on the plant siting requirements.

Construction Time. The Plant #4 system, due to basic system simplicity, will impact the plant construction time the least. The installation of the tanks and heat exchanger system can be completed in parallel with the base plant construction. The base plant, with the single turbine and minor hardware impact, would not require significantly more construction time than a non-storage plant.

The Plant #3 system would have the next lowest impact with the addition of the six PCIV's in parallel with the base plant. The installation would be physically closer tied to the base plant, with the parallel installation requiring more coordination than in Plant #4. Plants #1 and #2 with the additional peaking turbines and large tank farm or the underground caverns would require longer construction periods. None of the TES system installations should significantly increase total installation time unless it were determined that the cavern construction could not be done in parallel with the other site development.

Environmental Intrusion Factors. None of the four TES systems would have significant negative environmental impact. Plants #1 and #4 would have the high temperature oil storage tanks and the associated potential of a spill. These tanks would be located in an area of double containment to prevent any possible spill of the oil into surrounding acreage or into the ground. The Plant #2 caverns would have to be adeuqately lined to

prevent the leakage of high temperature water into surrounding ground area but more from the standpoint of structural integrity and contamination of the feedwater than for environmental reasons. The PCIV's of Plant #3 would have the least environmental design requirements. However, environmental design requirements would not be excessive in any of the four TES systems.

R&D Required. The four TES systems are all based on near-term technology. However, the size of the systems are such that additional R&D work would be required prior to final design specification. The Plant #1 and #4 dual media designs are based on smaller systems being considered for solar energy storage applications. However, the performance of the system with large tanks, specifically the thermocline, are not known. Additional larger scale testing would be required to finalize performance parameters and to justify the dual use of the heat exchangers. The underground lined cavern construction technology of Plant #2 has not been demonstrated on the scale required and appears to require some additional development prior to commercialization. The boiling and condensing mechanisms of the large cavern systems would also need additional development to substantiate the predicted performance. The Plant #3 PCIV system appears the least complicated and nearest term assuming the availability of the large vessels.

The Plant #3 and #4 large nuclear turbines capable of operation with large variations in extraction flows would need additional detailed design prior to commercial availability.

Extent of Performance Certainty. In line with the R&D requirements previously noted, the Plant #3 system performance appears the most certain of the four TES systems currently designed.

Level of Cost Uncertainty. Due to the expected variation in cavern construction costs, the plant #2 system is the system whose cost is most likely to vary substantially for site specific applications. The PCIV's

of Plant #3 are not widely available and would be limited source items. This could result in pricing variations since the system presently designed and costed is based on a single European manufacturer's vessels and prices. The TES systems of Plant #1 and #4 are based on readily available items with the costs more consistently applicable to varying sites.

O&M Requirements. Plant #3 with the least complex TES system would have the lowest O&M costs of the four systems. The Plant #1 and #4 peaking turbines and heat exchangers would be the more costly systems. The Plant #2 system would involve the fewest storage related components, but would have some added O&M costs due to the peaking turbine, condenser and large valving systems.

Regulatory Involvement. The inclusion of TES systems in coal-fired Plants #1 and #2 would require little additional regulatory involvement besides that discussed in the environmental intrusion section. Although the primary steam loop in the nuclear plants has not been modified, it could be expected that the inclusion of the high pressure PCIV's in Plant #3 and the feedwater cycle modification of both Plant #3 and #4 would require additional engineering during the plant licensing phase due to the unique configurations.

Materials Availability. The TES systems for Plants #1, #2 and #4 require no advanced materials or limited source products. However, the PCIV's of Plant #3 are not readily available. The manufacturers of these vessels are limited in number. With the scope of this contract, it was not necessary to identify multiple manufacturing sources. Therefore, the design and costing was based on data supplied by a single European manufacturer.

Plant Safety Requirements. The TES systems would not be safety hazards to any of the four plants. However, the high pressure PCIV's of Plant #3 and the significant amount of high temperature oil concentrated in one area in Plant #1 and #4 would require additional safety precautions as

compared to the Plant #2 underground caverns. None of the systems related requirements would be significant in complexity or cost.

Availability/Forced Outage. The addition of the complete peaking turbine power island in Plants #1 and #2 would make the forced outage rate and unavailability of these systems slightly higher than Plants #3 and #4. The use of the large number of heat exchangers and more complex controls in Plant #4 would result in a slightly higher forced outage rate for the TES Plant #4 than for Plant #3.

Load Following Capability. The peaking turbines in Plants #1 and #2 with direct throttle control would be capable of rapid load change in response to overall system requirements. The limited temperature change from shutdown to full load would not cause significant thermal stresses in the rotors or turbine shells. Accordingly, the rate of load change could be rapid. The control of the total load in Plants #3 and #4 would be more indirect and result in longer lag times as compared to Plants #1 and #2.

Relative to Cycling Coal Fired Plants

Load Following Capability. The direct throttle control and limited temperature changes imposed on the Plant #1 and #2 peaking turbines would allow for more rapid load following capability than Plants #3 and #4. Due to the lower temperature transients imposed on the Plant #1 and #2 peaking turbines as compared to a conventional 1800 psig/950°F/950°F steam turbine, the TES Plants #1 and #2 could meet faster load change requirements than the conventional units.

"Warm" Start-Up Capability. Due to the lower temperature transients in the Plant #1 and #2 peaking turbine, daily start-up of these machines should be faster than conventional coal-fired plants. Plants #3 and #4 will be slower responding than Plants #1 and #2, but these systems also allow faster daily start-up capability than conventional coal-fired plants.

Transient Stability. Overall system stability would be too system specific to evaluate the general characteristics of the TES systems in impacting overall system responses to a disturbance.

Maximum Capacity Factor. Due to the basic design of these storage systems, the maximum possible capacity factor for the peaking power plant portion could only be 25%. Since these TES systems are being evaluated against conventional plants and not solely against other storage systems, the limited maximum capacity factor would be a negative aspect of all four TES systems.

Start-Up Fuel. The four TES systems would all supply daily start-up without the use of fuel oil or other scarce fuel. Currently, cycling coal plants start-up daily using fuel oil. All four TES systems would have an advantage over conventional systems based on this feature.

CONCLUSIONS OF UTILITY BENEFIT ANALYSIS

The main conclusion drawn from the benefit analysis is that the four TES systems based on near-term designs for this study are not economically attractive to utilities. Exact cost reductions in the peaking and storage costs cannot be determined for all utilities due to the sensitivity of the cost-value relationships as a function of system generation mix and load profile. However, cost reductions of 10-40% are required for the TES system to be competitive with cycling coal plants in the generalized utility systems studied. Cost reductions of 40-50% are required for TES systems to be competitive with gas turbines at 1500 hours of annual operation.

The capital investment required for storage is generally equal to or greater than that for at least some types of complete generation equipment, especially peaking systems. Hence, if storage systems are to be viable, there must be an opportunity to displace some of the high fuel or production costs of peaking generation equipment with lower production costs of baseload or intermediate equipment. Any production cost savings which are possible will depend on the fuel costs and efficiencies of both the peaking and storage systems.

The values of the TES systems to utilities are sensitive to the cost difference between gas turbine fuel and coal. The Plant #2 design could be competitive with gas turbines at a fuel cost differential of 3.6 $/MBtu (1976$). The estimated 1990 difference (1976$) from Table 5-2 is 2.15 $/MBtu.

The TES systems meet the design objectives of being load following and daily cycling plants that are not dependent on scarce fuels. A 12% penetration of TES system plants into a typical generation mix (EPRI Utility System D) would reduce the system oil consumption by 32% (3.3 million barrels per year). However, a 12% penetration by cycling coal plants in the same utility system would reduce oil consumption by 52%.

Additional testing and development work on large TES systems would be required prior to a major commitment to TES by utilities. This large scale demonstration would be required to substantiate the performance figures for final system designs. The study design performance parameters were all extrapolated from smaller storage applications.

A major disadvantage of TES systems as compared to cycling coal plants or gas turbines is their limited capacity to operate any any time if required because of other system outages. Increasing TES system capacity, however, so that it can operate more hours per day increases the cost more than the benefits obtained.

REFERENCES FOR SECTION 5

1. Galloway, C.D., Landes, I.H., and Marsh, W.D.; "The Role of Pumped Storage in Generation Systems"; Proceedings of the American Power Conference, 1964.

2. Kaupang, B.M., Marsh, W.D., Moisan, R.W.; "A Rational Approach to the Evaluation of Advanced Energy Conversion and Storage Plants", Proceedings of the American Power Conference, 1978.

3. Electric Power Research Institute (EPRI); "Requirements Assessment of Photovoltaic Power Plants in Electric Utility Systems"; EPRI ER-685-SR, Summary Report, June 1978.

4. Electric Power Research Institute (EPRI); "Requirements Assessment of Wind Power Plants in Electric Utility Systems"; EPRI ER-978-SY, Summary Report, January 1979.

5. Electric Power Research Institute (EPRI); "Synthetic Electric Utility Systems for Evaluating Advanced Technologies"; EPRI EM-285, February 1977.

6. Electric Power Research Institute (EPRI); "Technical Assessment Guide"; EPRI PS-866-SR, Technical Assessment Group, Palo Alto, California, June 1978.

7. Garver, L.L.; "Effective Load Carrying Capability of Generating Units"; IEEE Transactions on Power Apparatus and Systems, Vol. PAS-85, No. 8, August 1966.

8. Edison Electric Institute; "Report on Equipment Availability for the Ten-Year Period 1965-1975"; EEI Publication No. 76-85.

Section 6

PROGRAM RECOMMENDATIONS

SCOPE

Based upon the results of Task I, II, and III, recommendations are to be made in Task IV for the development and near-term power plant demonstration of the Task II designed systems to satisfy the goal of near-term commercialization.

QUANTITATIVE ANALYSIS INPUT

The Table 6-1 summary tabulation displays the cost of electricity (COE) in mills per kilowatt-hour comprised of capital, fuel, and operation and maintenance cost elements. These data, obtained from the data of Section 5, represent the incremental cost of peaking power associated with each plant operating at 1500 hours annually, except for the last column which assumes operation at 2500 hours annually for cycling coal.

Table 6-1

COST OF ELECTRICITY SUMMARY
(mills/kWh)

	TES Plant No.				Cycling Coal		Gas Turbine	Cycling Coal
	1A	2	3	4A	1800/950/950	2400/1000/1000	(Oil Fuel)	(2500 h/yr)
Capital Cost	90	84	197	127	90	105	18	54
Fuel Cost	32	26	24	37	22	21	79	22
O&M Cost	8	9	5	5	8	8	4	8
COE	130	119	226	169	120	134	101	84

- Incremental Cost
- Peaking Power
- 1500 Hours Annual Operation
- Includes Nonreheat Impact

The first four columns of data represent the Task II designed Thermal Energy Storage (TES) plants, identified as:

Plant #1A - High Sulfur Coal (HSC) using oil/rock storage and peaking turbines

Plant #2 - High Sulfur Coal (HSC) using underground cavern (U/G) storage of hot water and peaking turbines

Plant #3 - Light Water Reactor (LWR) using Prestressed Cast Iron Vessel (PCIV) to store hot water for feedwater heating

Plant #4A - Light Water Reactor (LWR) using oil/rock storage for feedwater heating

The cycling coal plants represent two design alternatives - one a low cost design with only three feedwater heaters operating at 1800 psig/ 950°F/950°F and the other with more conventional steam conditions of 2400 psig/1000°F/1000°F and with full seven feedwater heaters. The last column represents the low cost cycling coal plant but operating at the total annual hours more nearly representative of the hours that this type plant would operate in a utility system. Gas turbines burning oil are included as representative of typical current peaking plants.

The costs shown include an allowance for the capital costs penalties associated with the nonreheat system design changes in the coal fired TES plants. For this reason, the COE for TES Plants #1A and #2 differ from the levelized busbar energy costs for these plants given in Sections 4 and 5.

The results depicted on Table 6-1 indicate the following:

1. For 1500 hours annual operation oil fired gas turbines are the most economical source of peaking power at a COE of 101 mills/ kWh.

2. The most economical TES plant provides peaking power at a cost comparable to cycling coal plants for an equivalent annual operation of 1500 hours - a COE of 119 mills/kWh for TES Plant #2 as contrasted to 120 mills/kWh for the low cost cycling coal plant.

3. Cycling coal plants operating at 2500 hours annually provide peaking power at a COE of 84 mills/kWh. This is far below that for TES plants which are limited to near 1500 hours annually.

The capital and production costs of TES plants as defined in Tasks II and III to achieve peaking power exceeds the value to the utility of that peaking power. From the Task II analysis the equivalent peaking power can be provided more economically by alternate generation options, such as gas turbines or cycling coal plants, depending upon the extent of annual operation. When TES Plant #2 was designed for twice the capacity and its operation simulated in EPRI Utility System D, the system costs increased nearly twice as much as its value increased to the utility.

TES plant penetration in utilities with peaking gas turbines conserves scarce fuel resources; however, cycling coal plants could reduce scarce fuel consumption even more than TES plants. The limited capacity factor of TES plants restricts their availability for extended periods while cycling coal plants have no such constraint. System dispatch considerations will overshadow any marginal economical advantage that TES plants may have over cycling coal plants for the utility user.

QUALITATIVE ANALYSIS INPUT

The lack of economic competitiveness of TES plants to other peaking power generation alternatives did not justify a rigorous qualitative analysis. However, TES operational and cost characteristics learned during this program could be utilized to redefine initial design assumptions that might result in potentially more competitive economic benefits, and this will be briefly considered.

Table 6-2 shows the relationship of TES storage-related costs to the total direct cost increment associated with each TES plant. These data were obtained from the Section 4 capital cost tabulations and are the direct costs (not the TOTAL investment costs) discussed earlier. TES

storage-related costs include all costs identified as storage equipment or storage media. All other direct costs (turbine plant, structures, heat rejection, etc.) incurred between the base plant (not the applicable NUREG Reference Plant with reheat) and the TES plant design were categorized as "Remaining Costs". These costs, in millions of dollars, and their percentage of the total direct cost increment provide an appreciation of the cost relationship between the TES subsystem and the design changes necessary to incorporate that subsystem into base plant design.

Table 6-2

TES STORAGE COSTS*

	Storage-Related Costs	Remaining Costs
Plant #1A	$46M	$56M
HSC, Oil/Rock	45%	55%
Plant #2	$37M	$52M
HSC, U/G Cav.	42%	58%
Plant #3	$87M	$32M
LWR, PCIV	73%	27%
Plant #4A	$41M	$39M
LWR, Oil/Rock	51%	49%

* Direct costs, incremental to nonreheat base plant.

The potential for significantly reducing the total direct cost by further R&D on the power-related components comprising "Remaining Costs" is very limited because these components are relatively standard state-of-the-art equipment, e.g., turbines, piping, valving, etc. Reductions in total cost must, therefore, come almost entirely from reductions in the TES storage-related costs.

Table 6-3 provides further insight into the composition of TES storage costs. For those costs shown on Table 6-2 as "Storage-Related Costs", the single largest dollar value of each plant is identified in Table 6-3. The large cost item is shown at the left for each of the four TES plants shown at the top of the table. For each item the cost in millions of dollars and its percentage of "Storage-Related Costs" (from Table 6-2) are shown. The number(s) in parenthesis indicates the percentage of the "Storage-Related Costs" associated with the next largest dollar value item(s). For TES Plant #1A where three items are roughly comparable in cost magnitude, three percentage numbers are provided. An assessment of each item's dollar magnitude and flexibility (or inflexibility) will yield a subjective evaluation of each TES plant's potential for capital cost reductions.

Table 6-3

POTENTIAL FOR REDUCING TES CAPITAL COSTS*

Major TES System Cost Item	Plant #1A HSC Oil/Rock	Plant #2 HSC U/G Cav.	Plant #3 LWR PCIV	Plant #4A LWR Oil/Rock
Heat Exchanger	$31M 28% (20,18)			
Cavern		$34M 92% (5)		
PCIV			$78M 90% (6)	
Heat Exchanger				$30M 73% (10)

* Direct Costs, incremental to nonreheat base plant.

In each of Plants #2, #3, and #4A one storage system item stands out as the major contributor of the cost. In Plants #2 and #3 where high temperature water is stored, the major item is the storage containment. In Plant #4A the major contributor is the heat exchanger.

The magnitude of cost reductions required for TES plants to be economically competitive in the near-term as discussed in Section 5 implies the need for a major R&D breakthrough in the TES subsystem. Far-term utility application options such as non-standard turbine or boiler equipment or alternate TES subsystem concepts (such as Latent Heat) are outside the scope of this study but may provide more competitive TES plant designs for far-term commercialization.

To achieve near-term commercialization, an investigation, possibly utilizing utility simulation analysis, could be performed to verify selection of the most compatible utility system for either a coal or a nuclear TES plant. The specific TES plant could be custom designed, utilizing the technical insight gained during this study, to optimize the match between the TES plant operational characteristics and the utility system production characteristics as defined by a unique load factor curve and generation equipment mix. These optimized plant designs, custom matched with a specific utility system, would then provide data to allow a detailed, comprehensive development and demonstration program assessment.

DEVELOPMENT AND DEMONSTRATION PROGRAMS

Development, acceptance and commercialization of technologies that have not been traditionally utilized may represent a high risk to the commercial user and therefore will require indications of substantial economic benefits to motivate user consideration and potential adoption. Based upon the technoeconomic results of this study, substantial economic benefits of TES plants are not indicated in the near-term and, therefore, a development and/or demonstration program does not appear to be viable to utility users at the present time.

However, during performance of this study, three specific considerations not previously included in the methodology for defining development/demonstration programs were determined to be of sufficient interest that a brief, preliminary assessment of development/demonstration programs will be undertaken for illustrative purposes.

Typically, a development program is defined from results of both quantitative and qualitative benefit analyses, and a qualitative assessment of implementation factors. For TES systems, use of Technology Transfer from other developmental programs must not be overlooked. For example, oil/rock systems for the storage of thermal energy are now being built and tested under the auspicies of the Department of Energy's Solar Programs. Results of the Solar Total Energy - Large Scale Experiment at Shenandoah, Georgia and the Solar Central Receiver Pilot Plant at Barstow, California as well as other relevant applications can greatly reduce the duration and expense of oil/rock development programs conceived without consideration of technology transfer. Similarly a literature or other review should be undertaken for each TES concept under development consideration to ensure maximization of technology transfer benefits.

Integrating the objective and subjective results from Tasks II and III to the depth warranted by technoeconomic conclusions of this study, results in the preliminary selection of an oil/rock storage concept, TES Plant #1A, for illustration of a development program. The development needs of this TES concept are twofold. First, performance of commercial size storage components was projected based upon scale-up from presently available test data. Verification of these performance characteristics is mandatory. Secondly, a compatible base system is required since TES Plant #1A is a nonreheat design plant while most presently operating HSC plants are reheat design plants. The combination of scale-up storage components in conjunction with a compatible base system defines a demonstration plant. It is the specialized needs of a nonreheat system design that requires combining the development and the demonstration programs.

These combined programs would provide for verification of developmental performance on a scale sufficiently large to evaluate full-scale commercial operation but small enough to maintain demonstration program costs at acceptable low levels.

Combining the development and demonstration programs now provides an option not previously viable; namely, retrofitting a TES system into a specific plant. Previous studies* showed that the costs associated with retrofit were excessively high, due primarily to plant downtime during system conversion. Accordingly, this study was based upon the assumption that the TES plants would be newly designed and constructed facilities However, availability of data (such as plant size, siting requirements, type of TES system, available utility facilities, etc.) for an optimized TES plant in a specific utility system now allows comparing (1) the groundrule used in this study of planned plant construction including a TES system with (2) a procedure for retrofitting a TES system into a specific operating plant with non-utility sponsorship overcoming the economic penalty associated with retrofit. The latter option of retrofit appears to offer the lowest cost means of achieving a near-term development and/or demonstration program.

PROGRAM RECOMMENDATIONS

As previously indicated, the technoeconomic results of this study do not support pursuit of thermal energy storage as a means of replacing conventional oil fired peaking generation equipment. Additional work could be performed searching for a more compatible utility system while seeking alternate system designs with the expectation of achieving increased economic benefits. The results of such work could be projected based upon the knowledge of TES plant operational and cost characteristics gained during this study. However, such unsubstantiated projections are

---

* Bechtel Corporation, "Retrofitted Feedwater Heat Storage for Steam Electric Power Stations Peaking Power Engineering Study," ERDA Contract No. EY-76-C-02-2863*000, Research and Engineering, October 1976.

insufficient to support programmatic decisions concerning continuation or discontinuation of TES system design studies. The worth of this additional work can only be evaluated by the agency responsible for allocating the resources required to perform these studies.

It is the opinion of General Electric that additional efforts towards refinement of near-term TES plant designs in an attempt to achieve economic competitiveness with alternate peaking power options, especially with cycling coal plants, will prove to be only marginally successful. Continuation of marginal technologies should be considered only if all other available resource investments appear to yield equivalent or less favorable results.